NEWNES POWER ENGINEERING SERIES

Industrial Power Engineering and Applications Handbook

K. C. Agrawal

Newnes

NEWNES POWER ENGINEERING SERIES

Industrial Power Engineering and Applications Handbook

NEWNES POWER ENGINEERING SERIES

Newnes Power Engineering Series is a new series of advanced reference texts covering the core areas of modern electrical power engineering, encompassing transmission and distribution, machines and drives, power electronics, and related areas of electricity generation, distribution and utilization. The series is designed for a wide audience of engineers, academics, and postgraduate students, and its focus is international, which is reflected in the editorial team. The titles in the series offer concise but rigorous coverage of essential topics within power engineering, with a special focus on areas undergoing rapid development.

The series complements the long-established range of Newnes titles in power engineering, which includes the *Electrical Engineer's Reference Book*, first published by Newnes in 1945, and the classic *J&P Transformer Book*, as well as a wide selection of recent titles for professionals, students and engineers at all levels.

Further information on the **Newnes Power Engineering Series** in available from bhmarketing@repp.co.uk and www.newnespress.com

Please send book proposals to Matthew Deans, Newnes Publisher
matthew.deans@repp.co.uk

Other titles in the Newnes Power Engineering Series
Acha, Agelidis, Anaya & Miller Electronic Control in Electrical System 0 7506 5126 1

Miller (ed.) Electronic Control of Switched Reluctance Machines 0 7506 5073 7

NEWNES POWER ENGINEERING SERIES

Industrial Power Engineering and Applications Handbook

K.C. Agrawal

Newnes
BOSTON OXFORD AUCKLAND JOHANNESBURG MELBOURNE NEW DELHI

To my parents

A member of the Reed Elsevier group

Library of Congress Cataloging in Publication Data
Agrawal, K.C.
Industrial power engineering and applications handbook/K.C. Agrawal.
p. cm.
Includes bibliographical references and index.
ISBN 0 7506 7351 6
1 Factories – Power supply – Handbooks, manuals, etc. I Title.
TK 4035 F3. A37 2001
658.2′6–dc21 2001016211

British Library Cataloging in Publication Data
Agrawal, K.C.
Industrial power engineering and applications handbook
1 Electrical power transmission – Handbooks, manuals, etc.
I Title
621.3′1

The publisher offers special discounts on bulk orders of this book.
For information, please contact:
Manager of Special Sales
Butterworth-Heinemann
225 Wildwood Avenue
Woburn, MA 01801-2041
Tel: 781-904-2500
Fax: 781-904-2620

For information on all Butterworth-Heinemann publications available, contact our World Wide Web home page at: http://www.bh.com

1 0 9 8 7 6 5 4 3 2 1

Typeset in Replika Press Pvt Ltd., Delhi 110 040, India

Printed and bound in Great Britain

Contents

Part I Selection, Testing, Controls and Protection of Electric Motors

Part IV Power Capacitors

Part V Bus Systems

Preface

The author has had a long association with the machines described in this book. The book is the result of this experience and the overwhelming help and support extended to him by his colleagues, friends and business associates over the last twelve years.

The purpose of this book is to share the experience of the author with those in the field. It is an attempt to make these subjects simple and interesting. The book should provide an easy approach to answer the problems an engineer or engineering student may face when handling these machines.

The author is sure that the readers will find ample opportunity to learn from his experience and apply this information to their field of activities. The book aims to provide a bridge between the concept and the application. With this book by his or her side, an engineer should be able to apply better, design better and select better equipment for system needs and ambient conditions. It should prove to be a handy reference to all those in the field of design and application, protection and testing, production, project engineering, project implementation or maintenance, in addition to the sales and purchase of these products.

Engineers have done an incredible job by inventing new technologies and bringing them, over the years to their present level. Research and development work by a dedicated few scientists and engineers has been an untiring process which has provided us with yet more advanced forms of technology. The credit for this book goes to these engineers and scientists throughout the world.

The author is not an inventor, nor has he done anything new in these fields. He has only attempted to bring together such advances in a particular field in one book for their better application. The author's contribution can be regarded as an appropriate selection and application of the available technology and products for their optimum utilization.

All relevant aspects of a machine, including its design, have been discussed but greater emphasis is laid on selection and application. Since this is a reference book the basic theory is assumed to be known to a student or a practising engineer handling such machines and/or technologies.

In the academic world the derivation of a formula from fundamentals is regarded as most important. In practice, this formula matters more rather than its origin. But for those who wish to know more of the reasoning and the background, care is taken that such subjects are also covered. The author hopes that readers will be satisfied to have most of their queries answered.

The book has been written so that it should refresh and awaken the engineer within a reader. The author is certain that this is what readers will feel as they progress through this book. A cursory reading will bring them abreast of the subject and enable them to tackle problems with ease and simplicity. The author's efforts will be defeated if this book falls short of this aim.

The endeavour has been to provide as much information as possible on the application of available technology and products. It should help application engineers to select and design a more suitable machine or power system for their needs. As mentioned above, this text will not cover the full engineering derivations, yet all fundamentals have been provided that are considered relevant to engineer any machine or system covered in this book. To augment the information, 'further reading' has also been provided to support the text and to answer queries that may arise on a particular subject. For detailed engineering, the manufacturers are still the best guide. Detailing and engineering must be left to them. In this book, the author has tried to make the subject comprehensive yet concise and easy to understand so that, one can easily refer to it at any time. The references drawn are brief, but pertinent, and adequate to satisfy a query.

This book may prove to be a boon to young engineers entering the field. With it they can compare the theory of their studies with application in the field.

Whereas all aspects that were thought necessary have been considered, it is possible that some have been omitted. The author would be grateful to receive suggestions from readers for any additions, deletions or omissions to make this book even more useful and up to date.

K.C. Agrawal

Acknowledgements

The author acknowledges with gratitude the help extended to him by his colleagues and friends and for the catalogues and leaflets from various manufacturers. Also helpful have been a score of references and textbooks on the subject as well as product standards such as IEC, IEEE, ANSI and NEMA, ISO, BS and IS and other national and international publications.

The author's most sincere thanks are due to the following, who have given their whole-hearted support and help in compiling this book and making it up to date. They have provided details of the latest practices followed by leading consultants, engineers and end users, as well as the national and international practices of the various manufacturers.

Dr Abraham Verghese	English Electric (now Alstom)
Anil Kamra	Crompton Greaves
Ashwani Agrawal	ABB
Dr Ashok Kumar	University of Roorkee
B. Raman	BHEL
D.K. Duggal	NTPC
M.R. Atter	ECS
P.S. Gokhle	Syntron Controls
S.P. Sharma	L&T
Dr Subir Sen	Power Grid Corporation
V.P. Sharma	EIL

The International Electrotechnical Commission (IEC)*

Special thanks for formatting the book go to:

Anjuna Agrawal	The author's daughter for her unflinching support throughout
Manish Chand	Computer support and assistance
Asad Mirza	Editing and proof reading
A.K. Shringhi	Illustrations and drawing services

Besides the above, the following have been a source of encouragement and continued support:

Bhanu Bhushan	Power Grid Corporation
Harbhajan Singh	Crompton Greaves
Indu Shekhar Jha	Power Grid Corporation
N.K. Bhatia	English Electric (now Alstom)
Dr P.C. Tripathi	BHEL
Y. Pal	Ex EIL

as well as a number of friends and well-wishers in addition to those mentioned in the Technical Support section below.

I would like to apologize to my family and friends for neglecting them during the time it has taken me to write this book; in particular, my wife Madhu and my daughter Anjuna.

---

*The author thanks the IEC for permission to use the following material. All extracts are copyright © IEC Geneva, Switzerland. All rights reserved. All IEC Publications are available from www.iec.ch. IEC takes no responsibility for and will not assume liability for damages resulting from the readers misinterpretation of the referenced material due to its placement and context in this publication. The material is reproduced or written with their permission.

Technical Support

The following companies and individuals have provided invaluable technical support.

Chapter 1

R.K. Gupta, NGEF Ltd, New Delhi; J.R. Mahajan, Voltas Ltd, Mumbai; Anil Kamra, Crompton Greaves Ltd, New Delhi; B. Raman, BHEL, Bhopal; S.K. Sharma, GE Motors India Ltd, Faridabad; Anirudh Singh, BHEL, New Delhi

Chapter 3

R.K. Gupta, Bhartiya Cutler Hammer Ltd, Faridabad

Chapter 5

Y.H. Kajiji, AOYP Engineering Company, Mumbai; Ram Chandran, Bhartiya Cutler Hammer Ltd, Faridabad

Chapter 6

Sanjay Sinha, Hemant Agrawal, Vijay Arora, Munish Sharma and Ajay Kumar, Allen Bradley India Ltd, Sahibabad; Shasidhar Dhareshwar, ABB, New Delhi; Ashwani Kaul, Kirloskar Electric Co. Ltd, New Delhi; Siddhartha Ghosh, Siemens Ltd, New Delhi; S.D. Nanda Kishore, Cegelec (India), Noida; Arun Gupta, EISA Lifts, New Delhi; Rajiv Manchanda, Usha (India) Ltd, Faridabad; Atul Grover, Allen Bradley Ltd, New Delhi; Ashok Jain, Fluidomat Ltd, Dewas (MP); AK Advani, Greaves Ltd, New Delhi; Nitin Sen Jain, Kirloskar Electric Co. Ltd, New Delhi; M/s Subhash Projects India Ltd; Sarvesh Kumar, Vestas RRB India Ltd, New Delhi; Bal Gopal, Dynaspede Integrated Systems (P) Ltd, Tamil Nadu

Chapter 7

Y.I.P. Sehgal, International Pumps and Projects, Noida (UP); S.U. Submersible Pumps, Noida (UP); V.P. Sharma, EIL, New Delhi

Chapter 8

Pembril Fluidrives Ltd, Aurangabad:
Ashok Jain, Fluidomat Ltd, Dewas;
Eddy Current Controls (India) Ltd, Kerala;
A.K. Advani, Greaves Ltd, New Delhi;
Sunil K. Kaul and K. Sukhija, Fenner (India) Ltd, Hyderabad/New Delhi;
S. Kumar and P.K. Das, Dunlop (India) Ltd, Kolkata/New Delhi

Chapter 9

B. Raman, BHEL, Bhopal, India

Chapter 10

Soman Dhar, Castrol India Ltd, New Delhi; Chandra Kumar, National Engineering Company, Jaipur; B.B. Rao, SKF Bearings India Ltd, Mumbai; B. Raman, BHEL, Bhopal; Anil Kamra, Crompton Greaves Ltd, New Delhi

Chapter 11

Y.D. Dosaj, Crompton Greaves Ltd, Ahmed Nagar; Y. Pal, Formerly with EIL, (GG-1/13-A, Vikaspuri, New Delhi)

Chapter 12

P.B. Dabholkar and Indrajit Jadhav, ABB, Vadodara; Sanjiv Bahl, ABB, Delhi; Pankaj Sachdeva and Balamourougan, Alstom (India), Chennai; V. Mohan, Rajiv Tandon, Prem Kumar and Chand Chadha, Larsen and Toubro, New Delhi; Kapil Grover, Allen Bradley, Sahibabad; S.P. Sharma, L & T, Mumbai; B. Raman, BHEL, Bhopal

Chapter 13

M.R. Atter, ECS, Noida; S.P. Sharma, L & T, Mumbai; D.K. Duggal, NTPC, Noida; N.K. Agrawal and P.K. Garg, BHEL, Haridwar; Abid Hussain, Consultant, New Delhi, Dr V.K. Anand, Anand CIS India, New Delhi; Stat-field systems (Coating) Pvt. Ltd; Mitsuba Electricals (P) Ltd,

India; Sajal Srivastava, Berger Paints Ltd, New Delhi; Sajjathe Sulthan, SBA Enviro Systems, New Delhi; R.R. Bagri, Clear Water Ltd, New Delhi

Chapter 14

Dr. Ashok Kumar Mathur, Department of Earthquake Engineering, University of Roorkee; Dr H.K. Chand, formerly Professor of Geography, Bhagalpur University

Chapter 15

S. Raghavan, Indcoil Transformers (P) Ltd, Mumbai; P.U. Patwardhan, Prayog Electricals (P) Ltd, Mumbai; Dr Abraham Verghese, English Electric Co. now Alston (India), Sharjah UAE

Chapter 16

Kamal Singhania, Crompton Greaves Ltd, New Delhi; Ashawni Kaul, Kirloskar Electric, New Delhi; Atul Khanna, AVK-SEGC & Controls (India) Ltd, New Delhi; V.K. Chaudhary, Cable Corporation of India Ltd, New Delhi; O P Kwatra, Havell's India Ltd, New Delhi

Chapter 17

Ashwani Agrawal, ABB, New Delhi; T.K. Modak, Jyoti Ltd, New Delhi

Chapter 18

Elpro International Ltd, Chinchwad Gaon, Pune; Station Surge Arresters and Thyrite Magne – Valve Station Lightning Arresters, M/s IEG (India) Ltd; TransiNor As, Norway, through Vijay Khanna, New Delhi; N. V. Anantha Krishnan, W.S. Industries (India) Ltd, New Delhi; A. S. Kushwaha and Arvind M. Khurana, Power Grid Corporation of India Ltd, New Delhi; V.P. Singh, Elpro International Ltd, New Delhi; Ashwani Agrawal, ABB India Ltd, New Delhi

Chapter 19

V. Raghavan, BHEL, Bhopal; N. Biswas, Alstom, New Delhi; P.P. Sreekanth, Alstom, New Delhi; Manjeet Singh and Man O. Misra, ABB, New Delhi; Sandeep Mathew Siemens India, New Delhi

Chapter 20

Y.K. Sehgal, Power Grid Corporation of India, New Delhi

Chapter 21

P. U. Patwardhan, Prayog Electricals (P) Ltd, Mumbai; Dr Abraham Verghese, Alstom (India), Sharjah, UAE, Dr Girish Chandra, KGMC, Lucknow

Chapter 22

V. P. Sharma, EIL, New Delhi

Chapter 23

Neutronics Manufacturing Co.; Syntron Controls; M. R. Attar, ECS; P. S. Gokhle, Syntron Controls, Mumbai; N. P. Singh, Sigma Control, New Delhi; Vijay Jain, Neutronics Manufacturing Co. Ltd, Mumbai; S.P. Sharma, L & T, Mumbai; Y. P. Likhyani, Crompton Greaves Ltd, New Delhi; M. K. Pandey, Kapsales Electricals (Khatau Junker), New Delhi; A.S. Kushwaha, Power Grid Corporation of India, New Delhi; P. K. Mittal, Indian Railways Telecommunication, New Delhi

Chapter 24

S. P. Singh, CEA, New Delhi; Dr Subir Sen and Indu Shekhar Jha, Power Grid Corporation of India Ltd, New Delhi; Brajesh Malviya, ABB India Ltd, New Delhi; M. Hanif, BHEL, New Delhi

Chapter 25

M. K. Pandey, Kapsales Electricals (Khatau Junker), New Delhi

Chapter 26

M. K. Pandey, Kapsales Electricals (Khatau Junker), New Delhi

Chapter 27

P. T. Pandyan, Western High Voltage Equipment, Jaisinghpur, Maharashtra

Chapter 29

Russy N. Master, L & T, Mumbai; J. K. Juneja, M/s J. K. Plastics, Noida; P.H. Kakade, M/s Vinayak Corporation, Mumbai

Chapter 30

Regie Paul, Indian Aluminium Co. Ltd (Indalco), Cochin, Kerala

Chapter 31

B. S. R. Patnaik, Best & Crompton Engineering Ltd, Chennai; D. K. Chaturvedi, NTPC Ltd, Noida; V. K. Mehta, BHEL, Jhansi; R. N. Khanna, Controls and Switchgears Ltd, New Delhi

Introduction

This book is split into five parts. A summary of each part follows.

Part I Selection, testing, controls and protection of electric motors

This part deals with three- and single-phase a.c. machines, and their protective switchgears. However, reference is made to and comparisons drawn of a d.c. motor with an a.c. motor, to assist a user to make a proper choice of machine.

However simple a motor is, it requires careful handling to ensure optimum performance and long years of trouble-free operation. A small drive, failing while in operation, may bring the entire process to a halt. One can visualize the loss of production that can result. Power plants, chemicals, fertilizers, petrochemicals, paper and cement mills all require careful selection of equipment to avoid breakdown or malfunctioning during operation. Motors and their controlgears are core components that require special attention:

- This part deals with the specifications, performance, characteristics and behaviour of motors under different operating conditions, their application and selection. It also covers aspects such as shock loading, motors for hazardous locations and open transient conditions in HT motors during a switching sequence.
- In Chapter 12 a detailed analysis is made of all unfavourable operating conditions and their effect on the performance of the motor and its protection for optimum utilization. The precautions also cover surge protection for HT motors. The details provided cover the smallest-influence that a particular parameter can have on a machine.
- This part-also deals with static controls and drives, soft starting and process control through solid-state technology (phasor and field-oriented controls) using IGBTs as well as energy conservation.
- There is special coverage of fluid couplings for soft starting and speed control. A comparison between static drives and variable-speed fluid couplings is made.
- Windmills (induction generators) as an unconventional energy source, vertical hollow shaft motors and submersible pump sets, selection of belts for transmission of load, the phenomenon of shaft currents are discussed.
- The text especially covers testing requirements and an introduction to quality assurance systems and application of ISO 9001.
- Special coverage of impulse testing of resin-rich formed coils and their in-house testing requirements is given.

Part II Switchgear assemblies and captive (emergency) power generation

(Including instrument transformers and cable selection)

The subjects covered aim at providing methods to form specifications and then design a switchgear assembly for all power distribution needs. It also provides coverage of draw-out assemblies. Establishing the fault level of a system is described including the electrodynamic and electromagnetic forces that arise.

- Testing procedures are informative and elaborate.
- Seismic effects and earthquake engineering is covered in this part to study the behaviour of an object under seismic conditions and its suitability for critical installations. The formation of the earth and movements of tectonic plates that cause earthquakes and volcanic eruptions are described.
- Instrument transformers (CTs, class PS, CT_s, VTs and CVTs etc.) form important components of a switchgear assembly for measurement and protection. They are covered for their specifications, selection and application.
- Design of class PS CTs (special coverage) is provided.
- Captive (emergency) power generation covers the application of a diesel generating set, its starting, protection, synchronizing and load sharing. This forms an important part of power distribution at any installation to provide a standby source of supply.
- The entire painting rocedure and effluent treatment is covered for those in the field of manufacturing such assemblies.
- In an attempt to provide as much information on the related subjects as possible and to make the book more complete for a project or a design engineer we have provided data and tables on cables and described in detail the procedure for the selection of the type and size of control and LT and HT power cables.

Part III Voltage surges, overvoltages and grounding practices

(including causes, effects and remedies and theory of overvoltages, ground fault protection schemes and grounding practices)

This part is complementary to Part II and provides technical support to switchgear assemblies and machines fed by them for surge and overvoltage protection. It is a very useful part for all those handling HV and EHV power systems and their surge and overvoltage protection.

- The part deals with the BIL of a system, protective margins and insulation coordination.
- It also deals with electric motors as they are typical for their surge behaviour and protection.
- It also covers the steepness of TRVs, their significance and methods of taming them. Reflections of travelling waves and surge transferences are also described.
- This part specifically considers the application and selection of surge capacitors and surge arresters. Since the internal causes of surge generation are a consequence of switching and type of interrupter, the part provides details of the various types of interrupters in use, their switching behaviour, current chopping and quenching of arc plasma. It also makes a detailed comparison of the various types of interrupters available to facilitate their selection and adaptation to a more appropriate surge protection scheme.
- Temporary overvoltages are different from surges as are their causes. Therefore temporary overvoltages also form an important parameter in a system design and its grounding method. This topic is therefore complementary to surge protection and has been dealt in detail to make a practising engineer or engineering student more aware of the behaviour of an HT system, particularly on a ground fault.
- Exposure of a human body to touch and step voltages and methods to deal with these are also covered. Grounding and ground fault protection schemes are described in detail with illustrations to help an engineer to select the most appropriate grounding method and ground fault protection scheme for a machine or system.
- The use of CBCTs is covered.

Part IV Power capacitors: power factor improvement and system voltage regulation: application of shunt and series capacitors

Reactive control is an important tool for voltage regulation and for optimizing available power utilization. It can also be used for attaining better stability of the system. It has therefore become a very important technique to improve an old distribution network that is being overutilized and is ailing with recurring problems such as flickering of voltage, frequent system outages and a normally low voltage at the consumer end. The author has attempted to apply reactive control to improve power distribution networks which are overloaded and which present these problems.

In this part the author provides all relevant aspects of a reactive control and carries out an exhaustive analysis of a system for the most appropriate control. Harmonic effects and inductive interferences as well as use of filter and blocking circuits are covered. Capacitor switching currents and surges and methods of dealing with these are also described.

This part considers reactive power control with the use of shunt and series capacitors. The controls may be manual or automatic through electromagnetic or static devices. Protection of capacitors and capacitor banks as well as design, manufacturing and test requirements, installation and maintenance are also covered, the main thrust being on the application of power capacitors.

- Application of series capacitors and analysis of an uncompensated transmission line and the capability of power transfer and system regulation with and without series compensation are also presented.
- To clarify the subject the basics and the behaviour of power capacitors in operation are also discussed.
- This part also briefly describes different types of power reactors required to control inrush currents or suppress the system's harmonic disorders, besides absorbing the excessive charging currents on an EHV system.

Part V Bus systems in including metal-enclosed non-isolated and isolated phase bus systems

Power transfer is a very important area of a power system. In this part it is dealt with in detail for both LT and HT systems and for all current ratings. For large to very large ratings, skin and proximity effects are also discussed to arrive at a design to transfer large amounts of power, without great loss, voltage drop or voltage unbalance. Technical data and current ratings for various sizes and sections of aluminium are provided with more emphasis on aluminium as it is most commonly used. The text provides material to design, engineer, manufacture and test a bus system of any current and voltage rating.

This part specifically deals with

- Design parameters
- Short-circuit effects
- Electrodynamic and electromagnetic forces
- Effects of proximity and reducing this by phase interleaving or phase transposition
- Designing a reactor for the middle phase to balance a large unbalanced current-carrying system
- Recommended practices to mount buses and make bus connections
- A detailed discussion of the isolated phase bus system concentrating on types of isolated enclosures and their design aspects
- Sample calculation to design an IPB
- Testing of bus systems.

PART I

Selection, Testing, Controls and Protection of Electric Motors

Theory, Performance and Constructional Features of Induction Motors

Contents

1.1 Introduction

The age of electricity began with the work of Hans Christian Oersted (1777–1851), who demonstrated in 1819 that a current-carrying conductor could produce a magnetic field. This was the first time that a relationship between electricity and magnetism had been established. Oersted's work started a chain of experiments across Europe that culminated in the discovery of electromagnetic induction by Michael Faraday (1791–1867) in 1831. Faraday demonstrated that it was possible to produce an electric current by means of a magnetic field and this subsequently led to the development of electric motors, generators and transformers.

In 1888 Nikola Tesla (1856–1943) at Columbus, Ohio, USA, invented the first induction motor which has become the basic prime mover to run the wheels of industry today. Below, for simplicity, we first discuss a polyphase and then a single-phase motor.

1.2 Brief theory of the operation of a polyphase motor

As noted above, electromagnetic induction takes place when a sinusoidal voltage is applied to one of two windings placed so that the flux produced by one can link the other. A polyphase winding when arranged in a circular form produces a rotating field. This is the basic principle of an electric motor, appropriately termed an induction motor. Here applies the theory of the 'left-hand rule' to define the relative positions of the current, field and force. The rule states that when the thumb, the forefinger and the middle finger of the left hand are arranged so that they all fall at right angles to each other then the forefinger represents the flux ϕ or the magnetic intensity H, the middle finger the current and the thumb the force or the motion (Figure 1.1). The field thus induced would rotate at a synchronous speed and the magnitude of flux built up by the stator current would be equal to ϕ_m in 2-ϕ windings and ${}^3/_2\phi_m$ in 3-ϕ windings. For brevity, we are not discussing the basics here. Figures 1.2–1.4 illustrate a current-flux phasor representation, the flux waveform and the magnetic field, respectively, in a 3-ϕ winding.

The winding that is static is termed a stator and that which rotates is a rotor. If I_{rr} is the rotor current and ϕ the instantaneous flux, then the force in terms of torque, T, produced by these parameters can be expressed by

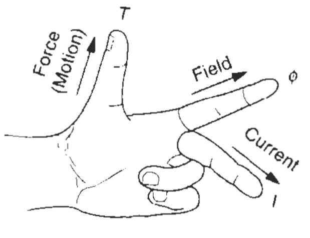

Figure 1.1 Fleming's left hand rule

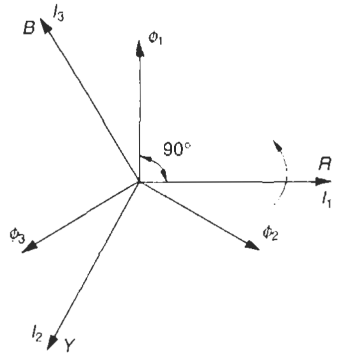

Figure 1.2 Phasor representation of current and flux phase disposition

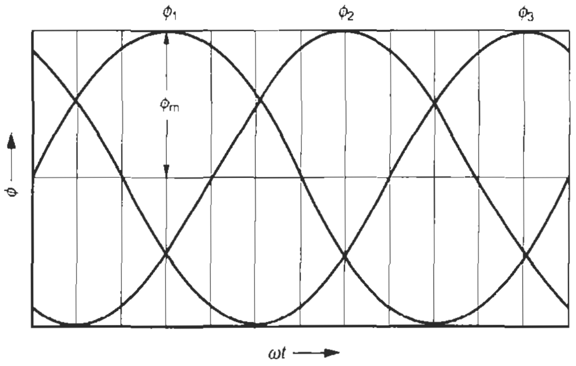

$\phi_1 = \phi_m \sin \omega t$
$\phi_2 = \phi_m \sin (\omega t - 120)$
$\phi_3 = \phi_m \sin (\omega t - 240)$

Figure 1.3 Magnetic flux waveform

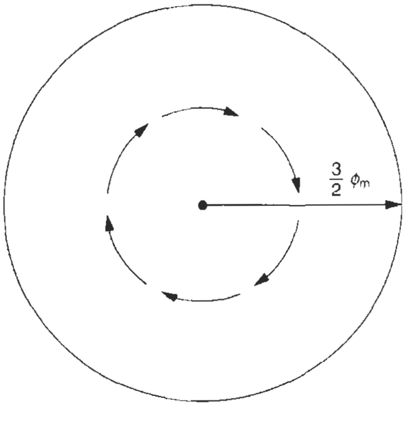

At any instant

$\bar{\phi}_1 + \bar{\phi}_2 + \bar{\phi}_3 = \frac{3}{2}\phi_m$

A constant field rotating at synchronous speed N_s

Figure 1.4 Production of magnetic field in a 3-ϕ winding

$$T \propto \phi_{\mathrm{m}} \cdot I_{\mathrm{rr}} \tag{1.1}$$

where

$\phi = \phi_{\mathrm{m}} \sin \omega t$

and ϕ_{m} = maximum field strength

In a 3-ϕ winding, therefore, for the same amount of current, the torque developed is 50% more than in a 2-ϕ winding.

The rotor power P developed by torque T at a speed N can be expressed by

$$P = \frac{T \cdot N}{974} \tag{1.2}$$

where

P = rotor power in kW

T = torque in mkg

N = speed in r.p.m.

Since the kW developed by a 3-ϕ winding is 50% more than by a 2-ϕ winding for the same value of stator current I_{r}, the economics of this principle is employed in an induction motor for general and industrial use. As standard practice, therefore, in a multi-phase system, only 3-ϕ induction motors are manufactured and employed, except for household appliances and applications, where mostly single-phase motors are used.

The magnetic field rotates at a synchronous speed, so it should also rotate the rotor. But this is not so in an induction motor. During start-up, the rate of cutting of flux is the maximum and so is the induced e.m.f. in the rotor circuit. It diminishes with motor speed due to the reduced relative speed between the rotor and the stator flux. At a synchronous speed, there is no linkage of flux and thus no induced e.m.f. in the rotor circuit, consequently the torque developed is zero.

Since,

$$T \propto \frac{S \cdot {}_{ss}e_2^2 \cdot R_2}{R_2^2 + S^2 \cdot {}_{ss}X_2^2} \tag{1.3}$$

the impedance considered represents only the rotor side. For simplicity, the stator impedance has been ignored, being too small with little error.

In equation (1.3)

T = torque developed

S = slip

R_2 = rotor resistance per phase

${}_{ss}X_2$ = standstill rotor reactance per phase, and

${}_{ss}e_2$ = standstill rotor induced e.m.f. per phase

The last two parameters are maximum during start-up, diminish with speed and become zero at the synchronous speed (when $S = 0$). Therefore $T = 0$ when ${}_{ss}e_2 = 0$.

Corollary

The speed–torque characteristics of a motor will largely depend upon its rotor parameters such as R_2 and ${}_{ss}X_2$. The higher the rotor resistance R_2, the higher will be the torque. From equation (1.3) we can draw a speed–torque curve of a motor as shown in Figures 1.5(a) and (b).

During start-up or at high slips, the value of ${}_{ss}X_2$ will be too high compared to R_2 and equation (1.3) will modify to

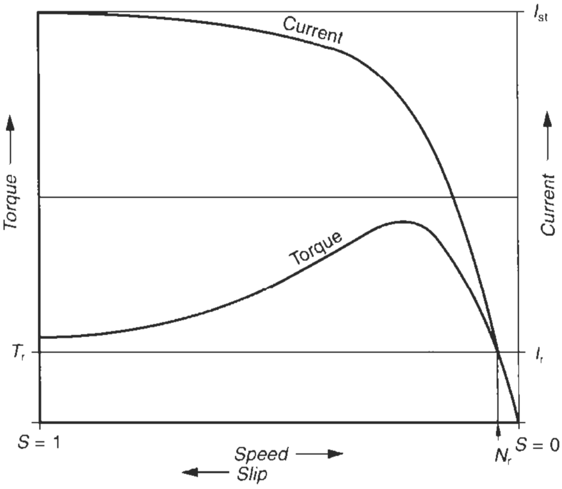

(a) Typical for an LT motor

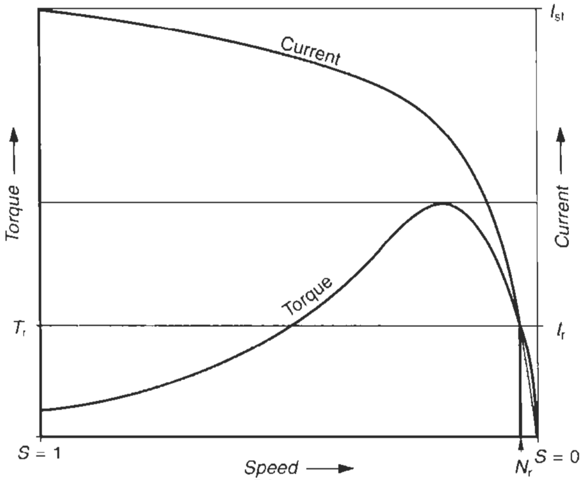

(b) Typical for an HT motor

Figure 1.5 Speed-torque and speed–current curves at the rated stator voltage

$$T_{\mathrm{st}} \propto \frac{S \cdot {}_{ss}e_2^2 \cdot R_2}{S^2 \cdot {}_{ss}X_2^2}$$

where T_{st} is the torque during start-up or

$$T_{\mathrm{st}} \propto \frac{{}_{ss}e_2^2 \cdot R_2}{S \cdot {}_{ss}X_2^2} \tag{1.3a}$$

and at lower slips or at near the rated speed, when $S \cdot {}_{ss}X_2 << R_2$, equation (1.3) will modify to

$$T_{\mathrm{r}} \propto \frac{S \cdot {}_{ss}e_2^2 \cdot R_2}{R_2^2}$$

or

$$T_r \propto \frac{S \cdot {}_{ss}e_2^2}{R_2} \qquad (1.3b)$$

T_r is referred to as the rated torque.

R_2 and ${}_{ss}X_2$ are thus the vital parameters that are used at the design stage to accomplish the desired characteristics and performance of an induction motor. The normal starting torque T_{st} for a medium-sized LT squirrel cage motor, say up to 400 kW, can be attained up to 200–250% and even more of the full-load torque T_r, and the pull-out torque T_{po} up to 200–350% of T_r (see also Chapter 2). In slip ring motors, the starting torque (T_{st}) can be varied up to its pull-out torque (T_{po}). (See Chapter 5.) For HT motors (2.4 kV and above) these figures are quite low compared to LT motors, due to the design economics for such machines. One consideration is the rotor slots that are normally not made with a double cage but with tapered or deep bars, to reduce rotor size and hence, the overall size of the machine and thus the cost. The T_{st} is now of the order of 70–130% of T_r and T_{po} 170–250% for motors up to 3000 kW. For yet larger machines these figures may be lower, say T_{st} of the order of 33–70% and T_{po} of the order of 150–225% of T_r. Large motors are normally switched at no-load through static drives (Section 6.16) or hydraulic couplings, (Section 8.3). A low starting torque therefore should not matter in the majority of cases.

These figures are for general reference only. For actual values the reader should refer to the motor manufacturer. Motors can, however, be designed to suit a particular application. Large LT and all HT motors are generally custom built.

If e_2 is the induced e.m.f. in the rotor circuit at any speed then

$$e_2 \propto -Z_r \cdot \frac{d\phi}{dt} \qquad (1.4)$$

The negative expression of voltage is according to Lenz's law, which states that 'The direction of the induced e.m.f. is such that it tends to oppose the change in the inducing flux'. In equation (1.4)

Z_r = number of turns in the rotor circuit per phase and
$d\phi/dt$ = rate of cutting of the rotor flux.

An illustration of this expression will give

$$e_2 = 4.44\ Kw \cdot \phi_m \cdot z_r \cdot f_r \qquad (1.5)$$

where
Kw = winding factor and
f_r = rotor frequency = S.f.

At synchronous speed, $d\phi/dt = 0$ and therefore $e_2 = 0$.

This is why an induction motor ceases to run at synchronous speed. The rotor, however, adjusts its speed, N_r, such that the induced e.m.f. in the rotor conductors is just enough to produce a torque that can counter-balance the mechanical load and the rotor losses, including frictional losses. The difference in the two speeds is known as slip, S, in r.p.m. and is expressed in terms of percentage of synchronous speed, i.e.

$$S = \frac{N_s - N_r}{N_s} \cdot 100\% \qquad (1.6)$$

where synchronous speed

$$N_s = \frac{120 \cdot f}{p} \text{ r.p.m} \qquad (1.6a)$$

f = frequency of the supply system in Hz and
p = number of poles in the stator winding.

1.2.1 Stator current

An induction motor draws a very high current during start-up as a result of magnetic saturation (Section 1.6.2A(iv)). The rapid voltage change from one peak to another ($2V_m$) (Figure A) within one-half of a cycle saturates excessively the iron core of the stator and the rotor. The saturation induces a very low inductance, L, and hence a low switching impedance (R being low already). The inductance of the circuit L varies with the level of saturation. Since $e = -L\,(di/dt)$, a high e and low L cause a very high starting current. This is seen to be of the order of six to seven times the rated current and exists in the system until the rotor picks up to almost its rated speed. We will notice sub-sequently that the performance of a motor is the reflection of its rotor characteristics. As the rotor picks up speed, it reduces the secondary induced e.m.f. $S \cdot {}_{ss}e_2$, which in turn raises the inductance of the rotor circuit and diminishes the start-up inrush current. The duration of start-up current thus depends upon the time the rotor will take to pick-up speed to almost its rated speed.

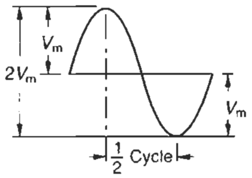

Figure A

Corollary: The case of a transformer
The situation in the case of a transformer is somewhat different. Its primary and secondary circuits form a composite unit and behave as one winding only. Since there is no air gap between the primary and the secondary windings, the combined winding impedance is less than that of a motor on switching (considering secondary open-circuited or connected on load). Consequently the switching current is a little higher, of the order of 8–12 times the rated current. If the secondary is short circuited, the short-circuit current will be much more than this, as indicated in Table 13.7. As will stabilize the voltage initial spikes, so it will diminish the level of saturation, raising the value of L. It will provide a high dampening effect (R/L) initially and slowly thereafter. The current will also decay rapidly initially and then slowly. The same will be true for any inductive circuit other than a motor.

1.2.2 Rotor current

With the same parameters, the rotor current of a motor, I_{rr}, can be expressed by

$$I_{rr} = \frac{S \cdot {}_{ss}e_2}{\sqrt{R_2^2 + S^2 \cdot {}_{ss}X_2^2}} \qquad (1.7)$$

at high slips, i.e. during the starting region when $S \cdot {}_{ss}X_2 >> R_2$:

$$I_{rr} \simeq \frac{{}_{ss}e_2}{{}_{ss}X_2} \qquad (1.7a)$$

This is a vital relationship, which reveals that during start-up and until such speed, the reactance of the motor windings ${}_{ss}X_2 >> R_2$, the rotor current will also remain almost the same as the starting current and will fall only at near the rated speed. (Refer to the current curves in Figures 1.5(a) and (b)). The initial inrush current in a squirrel cage induction motor is very high. In a slip-ring motor, however, it can be controlled to a desired level. (Refer to Section 5.2.1.)

Note For all practical purposes the stator performance data are only a replica of rotor data for torque and current. The performance of a motor is the performance of its rotor circuit and its design.

1.3 Motor output and torque

Motor rating, i.e. power available at the motor shaft, P_r, can be expressed in kW by

$$P_r = \frac{T_r \cdot N_r}{974} \text{ kW} \qquad (1.8)$$

where

N_r = rotor speed in r.p.m.

The power transferred by the stator to the rotor, P_s, also known as air gap power at synchronous speed, N_s, can be expressed in kW by:

$$P_s = \frac{T_r \cdot N_s}{974} \text{ kW} \qquad (1.8a)$$

where

N_s = synchronous speed in r.p.m.

The difference in the two is the electric power loss in the rotor circuit and is known as slip loss, i.e.

$$\text{Slip loss} = P_s - P_r = S \cdot P_s \qquad (1.9)$$

and from equation (1.8)

$$T_r = \frac{P_r \cdot 974}{N_r} \text{ mkg} \qquad (1.10)$$

Example 1.1

For a 150 h.p., 1480 r.p.m. (N_r) motor, the torque

$$T_r = \frac{110 \times 974}{1480} (150 \text{ h.p.} = 110 \text{ kW})$$

$$= 72.5 \text{ mkg}$$

1.4 Motor ratings and frame sizes

The standard kW ratings are internationally adopted and are based on the recommendations made by IEC 60072-1 and 2.* The ratings in kW up to 110 kW and their corresponding h.p. are shown in Table 1.1. Preferred ratings beyond 110 kW are given in Table 1.1(a). For recommended frame sizes, adopted by national and international manufacturers to harmonize and ensure interchangeability between all makes of motors, refer to IEC 60072-1 and 2. For easy reference we have provided these frame sizes in Table 1.2. These standards suggest the vital dimensions of a motor such as the shaft height, extension, its diameter and the mounting dimensions, etc.

Table 1.1 Preferred kW ratings and their nearest horsepower

kW	*HP*	*kW*	*HP*	*kW*	*HP*
0.06	0.08	2.2	3.0	37	50
0.09	0.12	3.7	5.0	45	60
0.12	0.16	5.5	7.5	55	75
0.18	0.25	7.5	10.0	75	100
0.25	0.33	9.3	12.5	90	125
0.37	0.50	11	15	110	150[a]
0.55	0.75	15	20	–	–
0.75	1.0	18.5	25	–	–
1.1	1.5	22	30	–	–
1.5	2.0	30	40	–	–

According to IEC 60072-1

[a] Beyond 110–4000 kW, the preferred ratings can follow the 'Renard Series', R-20 of preferred numbers as in ISO 3. Refer to Table 1.1(a).

Table 1.1(a) Preferred ratings beyond 110 kW according to the Renard Series, 'R-20' of ISO 3

kW	*kW*	*kW*
112	400	1400
125	450	1600
140	500	1800
160	560	2000
180	630	2240
200	710	2500
224	800	2800
250	900	3150
280	1000	3550
315	1120	4000
355	1250	–

Note Of these, ratings up to 1000 kW with some modifications have now been standardized by IEC 60072-1. For details refer to IEC 60072-1.

---

*IEC: International Electro-technical Commission, Switzerland.

Table 1.2 Recommended frame sizes

Frame size	*Shaft height for B_3 (Figure 1.17) motors (mm)*	*Frame size*	*Shaft height for B_3 (Figure 1.17) motors (mm)*
56	56	225L	225
63	63	250S	250
71	71	250M	250
80	80	250L	250
90S	90	280S	280
90L	90	280M	280
100S	100	280L	280
100L	100	315S	315
112S	112	315M	315
112M	112	315L	315
112L	112	355S	355
132S	132	355M	355
132M	132	355L	355
132L	132	400S	400
160S	160	400M	400
160M	160	400L	400
160L	160	450	450
180S	180	500	500
180M	180	560	560
180L	180	630	630
200S	200	710	710
200M	200	800	800
200L	200	900	900
225S	225	1000	1000
225M	225	–	–

According to IEC-60072-1 and 60072-2

Note Designations *S*, *M* and *L* denote the variation of length in the motor housing for the same shaft height.

1.5 Preferred ratings at different voltages

The preferred ratings at different rated voltages according to publication MG-1[†] are given in Table 1.3.

1.6 Influence of service conditions on motor performance

The performance of an induction motor is influenced by the service conditions, when these differ from the design assumptions. The parameters that may affect the performance of a motor are

Table 1.3 Preferred horsepower rating for different voltages

Supply system (kV)	*Preferred rating (h.p.)*
0.415*	Up to 600
3.3	200–6000
6.6	1000–12 000
11	3500–25 000

1 Voltage unbalance
2 System harmonics
3 Voltage variation
4 Frequency variation
5 Ambient temperature and
6 Altitude.

They may influence the performance of the motor by its

1 Output and
2 Torque. IEC 60034-1 stipulates for a minimum in-built capacity of a machine (all ratings and voltages) to sustain an excessive torque of 60% for a minimum of 15 seconds, without stalling or an abrupt change in its speed. This stipulation is to meet the need for an excessive torque of a transitory nature due to the above parameters or for a momentary excessive load torque itself during operation. This stipulation, however, would not apply to motors designed and manufactured to specific requirements.
3 Efficiency
4 Power factor
5 Speed
6 Slip and
7 Current

Note According to the stipulations of IEC 60034-1, any factor noted above which may influence the performance and cause an excessive current than rated, or because of an excessive load itself, motors rated up to 315 kW and rated voltage up to 1.0 kV should be capable of withstanding a current equal to 150% of the rated current for a minimum of two minutes. No such tolerance is, however, recommended for motors beyond 315 kW and all HT motors. This stipulation would not apply to motors that are designed and manufactured to specific requirements.

The extent to which these performance data may be influenced, by the non-standard operating conditions is discussed briefly below.

1.6.1 Voltage unbalance and system harmonics

As standard practice, all motors are designed for a balanced and virtually sinusoidal supply system, but it may not be feasible to obtain the designed supply conditions in practice. Hence, a motor is designed with a certain in-built capacity to sustain small amounts of voltage unbalances and some degree of harmonic quantities, such that the voltage waveform may still be regarded as sinusoidal.

Voltage unbalance

The performance of a motor is greatly influenced by a voltage unbalance in the supply system. It reduces its output and torque and results in a higher slip and rotor loss. This subject is covered in more detail in Section 12.2(v). For likely deratings, refer to Figure 12.1. A system with an unbalance of up to 1% or so calls for no derating, whereas one having an unbalance of more than 5% is not recommended for an industrial application, because of a

---

*This voltage is now revised to 0.4 kV as in IEC 60038.

[†] MG-1: Reference to a publication on Motors and Generators by NEMA (National Electrical Manufacturers Association, USA) which is adopted universally.

very high derating and the highly unstable per-formance of the motor.

The system may be regarded as balanced when the negative sequence component does not exceed 1% of the positive sequence component over a long period, or 1.5% for short durations of a few minutes and the zero sequence component does not exceed 1% of the positive sequence component. Refer to Section 12.2(v) for more details on positive, negative and zero sequence com-ponents.

System harmonics

A supply system would normally contain certain harmonic quantities, as discussed in Section 23.5.2. The influence of such quantities on an induction motor is also discussed in Chapter 23. To maintain a near-sinusoidal voltage waveform, it is essential that the harmonic voltage factor (HVF) of the supply voltage be contained within 0.02 for all 1-ϕ and 3-ϕ motors, other than design N* motors and within 0.03 for design N motors, where

$$\mathrm{HVF} = \sqrt{\Sigma \frac{v_\mathrm{h}^2}{n}} \qquad (1.11)$$

Here

v_h = per unit summated value of all the harmonic voltages in terms of the rated voltage V_r

n = harmonic order not divisible by 3 (presuming that the star-connected motors (normally HT motors) have only isolated neutrals) in 3-ϕ motors, i.e. 5, 7, 11 and 13, etc. Beyond 13, the content of harmonic quantity may be too insignificant to be considered.

For example, for a system having $v_{\mathrm{h}5} = 5\%$
$v_{\mathrm{h}7} = 3\%$
$v_{\mathrm{h}11} = 2\%$ and
$v_{\mathrm{h}13} = 1\%$

Then

$$\mathrm{HVF} = \left(\frac{0.05^2}{5} + \frac{0.03^2}{7} + \frac{0.02^2}{11} + \frac{0.01^2}{13} \right)^{1/2}$$

$$\simeq 0.026$$

1.6.2 Voltage and frequency variations

These have a great influence on the performance of a motor and the driven equipment, as analysed later. The motors are, however, designed for a combined variation in voltage and frequency according to zone A of Figure 1.6. The maximum variation during service must fall within this zone. It will permit a variation in these parameters as indicated in Table 1.4.

Where, however, a higher variation in voltage and frequency is envisaged, motors suitable to fall within zone B in Figure 1.6 can also be manufactured. See also Chapter 7 for special design considerations for certain types of load requirements.

Table 1.4 Combined permissible voltage and frequency variations

	←—— *Zone A* ——→		←—— *Zone B* ——→	
Voltage variation	+5% to −3%	−5% to +3%	+10% to −7%	−10% to +5%
Frequency variation	0 to 2%	0 to −2%	0 to 3%	0 to −5%

According to IEC 60034-1

Note IS 325 specifies voltage variation ± 6% and frequency variation ± 3% or any combination of these.

A *Effect of voltage variation*

Voltage variation may influence the motor's performance as shown below.

(i) Torque
From equation (1.3), $T \propto {}_{\mathrm{ss}}e_2^2$, and since the standstill rotor voltage is a function of supply voltage V_1

$\therefore\ T \propto V_1^2$

During start-up, at lower voltages, the starting torque is

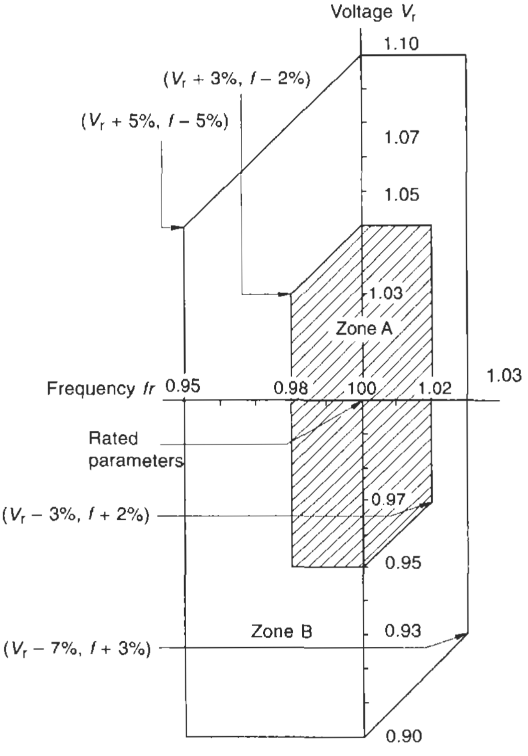

Figure 1.6 Voltage and frequency limits for motors

---

*IEC 60034-12 has recommended four rotor designs, i.e. *N*, *H* and *NY*, *HY*, to define starting performance for *DOL* and *Y*/Δ startings respectively. They are along similar lines, ones to those in NEMA MG-1. They define minimum torques, though the manufacturer can produce better ones.

reduced squarely and one should ensure that this is sufficient to accelerate the load within a reasonable time, without injurious heat or causing a stalled condition. This aspect is discussed at length in Chapter 2. The torque however, improves in the same proportion at higher voltages.

Example 1.2

During a run, if the supply voltage to a motor terminal drops to 85% of its rated value, then the full load torque of the motor will decrease to 72.25%. Since the load and its torque requirement will remain the same, the motor will start to drop speed until the torque available on its speed–torque curve has a value as high as 100/0.7225 or 138.4% of T_r, to sustain this situation. The motor will now operate at a higher slip, increasing the rotor slip losses also in the same proportion. See equation (1.9) and Figure 1.7.

Corollary

1 To ensure that the motor does not stall or lock-up during pick-up under such a condition, it should have an adequately high pull-out torque (T_{po}).
2 Since the motor now operates at a higher slip, the slip losses as well as the stator losses will increase. A circle diagram (Figure 1.16) illustrates this.
3 Judicious electrical design will ensure a pull-out torque slip as close to the full-load slip as possible and minimize the additional slip losses in such a condition. See Figure 1.8. A motor with a pull-out torque as close to full load slip as possible would also be able to meet a momentarily enhanced load torque during a contingency without any injurious heat or a stalling condition.

An increased voltage should improve the performance of the machine in the same way by reducing slip and the associated slip losses and also stator losses as a result of lower stator currents, but this would hold good only up to a certain increase in voltage, say up to 5%. Beyond this, not only will the no-load losses, as discussed above, assume a much higher proportion than the corresponding reduction in the stator current and the associated losses, the winding insulation will also be subject to higher dielectric stresses and may deteriorate, influencing its operating life, while at overvoltages of about 10% and higher the insulation may even fail. Moreover, the stator current may start to rise much more than the corresponding increase in the output to account for higher no-load losses and a poorer power factor. Figure 1.9 illustrates the approximate effect of voltage variation on the motor output. Higher voltages beyond 5% may thus be more harmful, even if the insulation level is suitable for such voltages. The circle diagram of Figure 1.16 explains this by shifting the semicircle to the right, because of higher $I_{n\ell}$ and $\phi_{n\ell}$ and a larger circle diameter, due to higher I_{st}

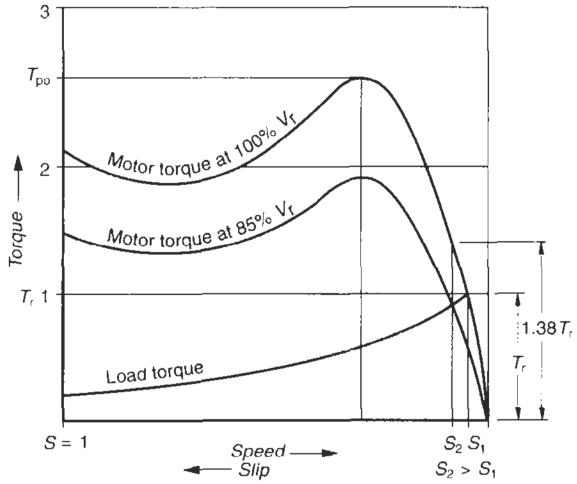

Figure 1.7 Higher full-load slip at lower voltages

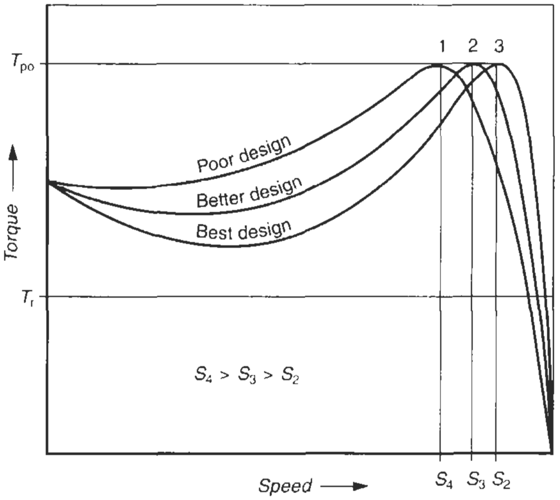

Figure 1.8 Significance of lower T_{po} slip

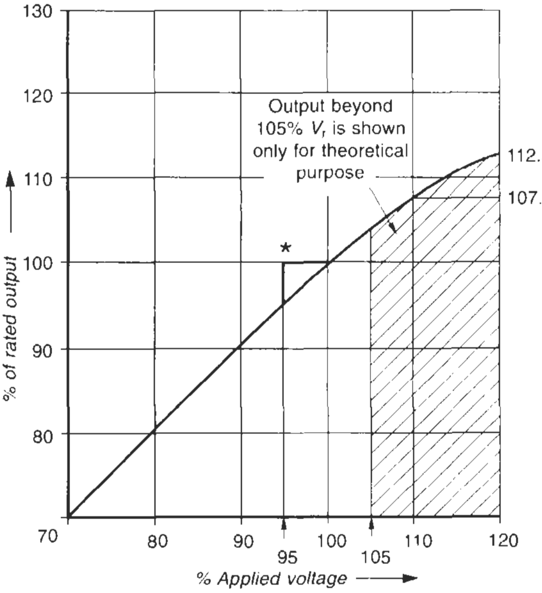

★ Motors are designed to develop rated output at 95% voltage

Figure 1.9 Effect of voltage variation on the motor output thereby increasing I_r a proportion of which will depend upon the magnitude of voltage.

Important note on starting torque, T_{st}

It is important to note that at voltages lower than rated the degree of saturation of the magnetic field is affected as in equations (1.1) and (1.5). There will also be a further drop in the supply voltage at the time of start-up. The net effect of such factors is to further influence the starting performance of the motor. See also IEC 60034-12. For risk-free duties and large motors, HT motors particularly, which have a comparatively lower starting torque, it would be appropriate to allow margins for such factors during start-up. Table 1.5, based on the data provided by a leading manufacturer, shows such likely factors at various voltages. The square of these must be applied to derive the more realistic operating starting torques at lower voltages than rated, rather than applying only the square of the applied voltage. Such a precaution, however, may not be necessary for normal-duty and smaller motors.

Example 1.3

Consider a 750 kW, 4-pole motor, having a rated starting torque T_{st} as 125% of the rated and starting current I_{st} as 600% of the rated. At 80% of the rated voltage the starting torque T_{st} will reduce to

$$T_{st} \text{ at } 80\%\ V_r = 125 \times 0.745^2$$

$$\simeq 69\% \text{ of rated (and not } 125 \times 0.8^2 \text{ or } 80\% \text{ of rated)}$$

(ii) Starting current

In the same context, the starting current will also decrease linearly according to this factor and not according to the supply voltage. In the above example, the starting current I_{st} at 80% of the rated voltage will therefore reduce to

$$I_{st} = 600 \times 0.745$$

$$= 447\% \text{ (and not } 600 \times 0.8 \text{ or } 480\%) \text{ of the rated current.}$$

(iii) Load current

In addition to the increased stator current necessitated by the lower voltage, the stator must draw a higher current from the supply to compensate for the higher losses at lower voltages. Since

$$\text{kW} \propto \frac{\sqrt{3} \cdot V \cdot I \cdot \cos\phi \cdot \eta}{1000}$$

if the supply voltage falls to 85%, the stator current for the same load should increase by

$I_r' = I_r/0.85$, i.e. by roughly 18% and if the voltage increases by 15%, the stator current should decrease to $I_r/1.15$ or 87% of I_r, i.e. a reduction of 13%. These would be the values when the core losses are ignored. But the core losses will also vary with the voltage as discussed below. Moreover, at a higher voltage, the p.f. will also become poorer and the motor will draw a higher current to account for this. All such factors, therefore, must be considered when making a selection of the rating of a motor, particularly for critical applications.

Table 1.5 Multiplying factor for starting torque at lower voltages

System voltage as % of rated	*Approx. multiplying factor (apply square of this)*	
	For 2- and 4-pole motors	*For 6- and 8-pole motors*
100	1.0	1.0
95	0.93	0.925
90	0.87	0.86
85	0.805	0.79
80	0.745	0.73
75	0.68	0.665
70	0.625	0.605
60	0.51	0.49
50	0.40	0.38

Source Siemens Catalogue M20-1980

(iv) Core and load losses

A current-carrying conductor produces two types of losses, i.e.

1 Resistive losses $\propto I^2R$ and
2 Core losses or magnetizing losses, which comprise
   - Eddy current losses and
   - Hysteresis losses

Magnetizing losses, however, as the name implies, are a phenomenon in electromagnetic circuits only. They are absent in a non-magnetic circuit. A motor is made of steel laminates and the housing is also of steel, hence these losses. Some manufacturers, however, use aluminium die-cast stator frames in smaller sizes, where such losses will be less (the bulk of the losses being in the laminations).

Since the resistive loss would vary in a square proportion of the current, the motor will overheat on lower voltages (drawing higher currents). At higher voltages, while the stator current may decrease, the core losses will be higher.

To understand magnetizing losses, we must first identify the difference between the two types of losses. Both represent losses as a function of the electric field, generated by the current-carrying conductors. A current-carrying conductor generates an electric field in the space around it such that $I \propto \phi$. The higher the current through the conductor, the stronger will be the field in the space. Some of the current will penetrate through the conductor itself, because of the skin effect and the rest will occupy the space. In an electric motor it will penetrate through the stator and the rotor core laminations and the housing of the motor and cause losses in the following way:

1 Resistive losses within the current-carrying conductors, i.e. within the electrical circuit itself, caused by the leakage flux (Figure 2.6), as a result of the deep conductor skin effect. This effect increases conductor resistance and hence the losses. For more details refer to Section 28.7.
2 Losses as caused by its penetration through the magnetic structures (core) and components existing in the vicinity. These losses can be expressed by:

(a) Eddy current loss, L_e:
Because of the skin effect

$$L_e \propto \frac{t_1^2 \cdot f^2 \cdot B^2}{\rho} \qquad (1.12)$$

i.e. $\propto B^2$, other parameters remaining same.

where

f = supply frequency

t_1 = thickness of steel laminations. To reduce such losses, particularly in large motors, it is imperative to use thinner laminations. To economize on the size and bulk of windings, because of the skin effect, motor manufacturers adopt the method of transposition when manufacturing stator windings. See also Section 28.8.4.

B = flux density

ρ = resistivity of the steel laminations.

(b) Hysteresis loss, L_h
To understand this, consider the rotor as magnetized up to a certain level a, as illustrated in Figure 1.10. When the current (i.e. flux ϕ or flux density B since $I \propto \phi \propto B \propto H$ etc.) is reduced to zero, the magnetic circuit would still have a quantum of residual magnetism, ϕ or B. For instance, at no current, i.e. when $H = 0$, there would still be a residual magnetic field in the circuit as indicated by *ob* and this would account for the hysteresis loss.

See the curve *abcda* in the shape of a loop, which is drawn at different values of H after the magnetic core was magnetized up to its saturation level *oa*. This is known as a hysteresis loop and the magnetic area represented by *daebd* as the energy stored. This energy is not released in full but by only a part of it (*bae*) back to the magnetizing circuit when the magnetic field H (or current) is reduced to zero. The loss of this energy (*dab*) is termed hysteresis loss and appears as heat in the magnetizing circuit, i.e. the stator and the rotor of an induction motor. This loss may be attributed to molecular magnetic friction (magnetostriction) and is represented by

$$L_h \propto f \,.\, (B_m)^{1.5 \text{ to } 2} \qquad (1.13)$$

i.e. $\propto (B_m)^{1.5 \text{ to } 2}$

Eddy current and hysteresis losses are complex quantities and can be estimated in a laboratory, on no load, in the form of power input, less $I_{nl}^2 \cdot R$ and friction and windage losses etc. as shown in Section 11.5. Based

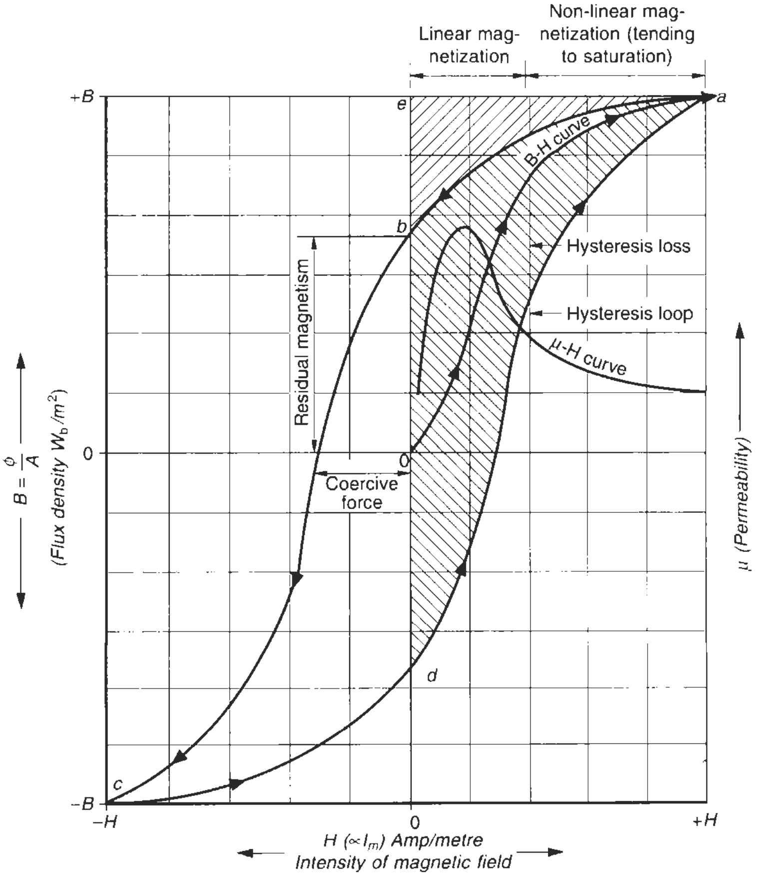

Figure 1.10 Hysteresis loop and magnetizing curve illustrating hysteresis loss

on this, a designer can take corrective action to minimize these losses.

For all practical purposes, the core losses may be regarded as proportional to the square of the flux density. With a reduction in voltage, the flux ϕ and so the flux density B will decrease in the same proportion as the voltage and so will the core losses.

As a rough estimate, except for a rise or fall in the current drawn by the stator, at lower and higher voltages respectively, the variation in the I^2R loss will be more or less counterbalanced by the fall or rise in the core loss. The core loss is proportional to B^2, provided that no-load iron loss and full-load resistive loss are roughly equal, which is so for most designs. A comparatively higher resistive loss to core loss will result in a higher I^2R loss at lower voltages compared to a corresponding reduction in the no-load loss and vice versa. While on no-load, the no-load current will be more or less according to the square of the voltage.

(v) Effect on power factor, efficiency and speed

At lower voltages the rotor will adjust its speed at a higher slip. The extent of slip will depend upon the speed–torque characteristics of the motor and the supply voltage. The efficiency is now low but the power factor better, due to the lower inductive core loss. These figures are reversed when the voltage is high. Table 1.6 shows the variation in the various parameters with the voltage.

(vi) Performance of the driven equipment

The speed of the motor is affected slightly as is the speed of the driven load. Since the output of the load is a function of speed, it is also affected although only marginally, unless the variation in the voltage is substantial, which may also cause a substantial reduction in speed. The poorer the speed–torque characteristic of the motor, the higher will be the speed variation, as illustrated in Figure 1.8.

B *Effect of frequency variation*

On a 3-ϕ system the frequency variation is normally within limits, which according to IEC 60034-1 is ± 2% (Figure 1.6). The reason for keeping the frequency variation low is that it is not influenced by any condition outside the generating point, and at the generating point, it is maintained constant through automatic speed regulation of the prime mover (frequency is directly proportional to the speed, equation (1.6a)). The effect of frequency variation, however small, is discussed below:

(i) *Speed* Since the speed is proportional to frequency, it is affected the most and in turn influences the performance of the driven equipment in the same proportion as its relation to the speed.

(ii) *Slip* The motor adjusts its speed according to the frequency and therefore there is no change in the slip.

(iii) *Motor output and torque* From equation (1.5)

Table 1.6 Approximate effects of voltage and frequency variations on motor performance

Parameters	*Voltage (as percentage of the rated voltage)*			*Frequency (as percentage of the rated frequency)*	
	120	*110*	*90*	*105*	*95*
Torque[a]					
Starting and max. running	Increase 44%	Increase 21%	Decrease 19%	Decrease 10%	Increase 11%
Speed					
Synchronous	No change	No change	No change	Increase 5%	Decrease 5%
Full load	Increase 1.5%	Increase 1%	Increase 1.5%	Increase 5%	Decrease 5%
Percentage slip	Decrease 30%	Decrease 17%	Decrease 23%	Little change	Little change
Efficiency					
Full load	Small increase	Increase 0.5 to 1%	Decrease 2%	Slight increase	Slight decrease
Three-quarter load	Decrease 0.5–2%	Little change	Little change	Slight increase	Slight increase
Half load	Decrease 7–20%	Decrease 1–2%	Increase 1–2%	Slight increase	Slight increase
Power factor					
Full load	Decrease 5–15%	Decrease 3%	Increase 1%	Slight increase	Slight increase
Three-quarter load	Decrease 10–30%	Decrease 4%	Increase 2–3%	Slight increase	Slight increase
Half load	Decrease 15–40%	Decrease 5–6%	Increase 4–5%	Slight increase	Slight increase
Current[b]					
Starting	Increase 25%	Increase 10–12%	Decrease 10–12%	Decrease 5–6%	Increase 5 – 6%
Full load	Decrease 11%	Decrease 7%	Increase 11%	Slight decrease	Slight increase
Temp. rise	Decrease 5–6°C	Decrease 3–4°C	Increase 6–7°C	Slight decrease	Slight decrease
Max. overload Capacity	Increase 44%	Increase 21%	Decrease 19%	Slight decrease	Slight decrease
Magnetic noise	More significant increase	Slight increase	Slight decrease	Slight decrease	Slight decrease

[a] See also the important note in Section 1.6.2A(i).

[b] See also Section 1.6.2A(ii).

$V_f \propto \phi_m \cdot f$, i.e. for the same applied voltage, V_f, an increase or decrease in the system frequency will decrease or increase the flux in the same proportion. Consider the variation in the rotor current I_{rr} with frequency from equation (1.7):

$$I_{rr} = \frac{S \cdot {}_{ss}e_2}{\sqrt{R_2^2 + S^2 \cdot {}_{ss}X_2^2}}$$

since ${}_{ss}X_2 = 2\pi \cdot f \cdot L$

where
L = inductance of the rotor circuit

$$\therefore I_{rr} \simeq \frac{{}_{ss}e_2}{2\pi fL}$$

$$\text{or} \propto \frac{1}{f}$$

Torque
From equation (1.1)

$$T \propto \phi_m \cdot I_{rr}$$

$$\text{i.e} \quad \propto \frac{1}{f} \cdot \frac{1}{f}$$

$$\text{or} \quad \propto \frac{1}{f^2}$$

The torque of the motor would approximately vary inversely as the square of the frequency.

Power
This will also be affected, being a multiple of T.N, i.e. by roughly $1/f$.

(iv) Effect on power factor

The no-load losses will slightly decrease or increase with an increase or decrease in the supply frequency since

$L_e \propto B^2 \cdot f^2$ and (from equation (1.12))

$L_h \propto B_m^2 \cdot f$ (from equation (1.13))

where the cumulative effect of flux density is in the square proportion and that of frequency $f^{1.1}$ (approx.). With an increase in frequency, therefore, the core losses decrease slightly and vice versa. The efficiency improves slightly and so does the power factor at higher frequencies and vice versa. Table 1.6 shows approximate variations in these parameters with frequency.

C *Effect of ambient temperature*

The motors are universally designed for an ambient temperature of 40°C according to IEC 60034-1, unless specified otherwise. For temperatures below 40°C, the motor will run cooler by the amount the ambient temperature is lower. To utilize a higher output because of lower ambient temperature may, however, not be worthwhile.

For a higher ambient temperature, the end temperature of the winding will exceed the permissible limit by the amount the ambient temperature is higher. For example, for a class E motor, an ambient temperature of 50°C will cause the end temperature to reach 125°C as against 115°C permissible by the resistance method. For details refer to Sections 9.1 and 11.3.2.

To restrict the end temperature to less than the permissible limits, it is essential that the motor output be reduced, or for a required output, a higher-capacity motor be chosen. Table 1.7 gives the approximate derating factors for different ambient temperatures. Figure 1.11 is based on these figures from which the derating factor even for intermediate temperatures can be quickly determined.

To consider a higher ambient temperature, we must assess the temperature rise so affected. For instance, an ambient temperature of 50°C will require the temperature rise to be restricted by 10°C or 65/75, i.e. 86.67% in class E insulation and 70/80, i.e. 87.5% in class B insulation. The derating for insulation B will be less than E for the same ambient temperature. But for simplicity, a derating graph has been drawn in Figure 1.12, based on the temperature rise restrictions for class E insulation. For all practical purposes, this curve will also hold good for class B insulation. These values are only for guidance and may vary from one manufacturer to another depending on the design and the reserve capacity available in a particular frame.

Example 1.4
A 100 h.p. motor is required to operate at 50°C and limit the temperature rise to 60°C. The derating and h.p. to be chosen for class *B* insulation can be determined as follows:

Table 1.7 Derating for temperature rise restriction

Ambient temperature °C	*Class E*		*Class B*		*Permissible output %*
	Permissible temp. rise °C	*Percentage rise*	*Permissible temp. rise °C*	*Percentage rise*	
40	75	100.00	80	100.00	100
45	70	93.33	75	93.75	96
50	65	86.67	70	87.50	92
55	60	80.00	65	81.25	87
60	55	73.33	60	75.00	84
65	50	66.67	55	68.75	78
70	45	60.00	50	62.50	71

Note Unless specified otherwise, all temperature measurements of motor are referred to by the resistance method.

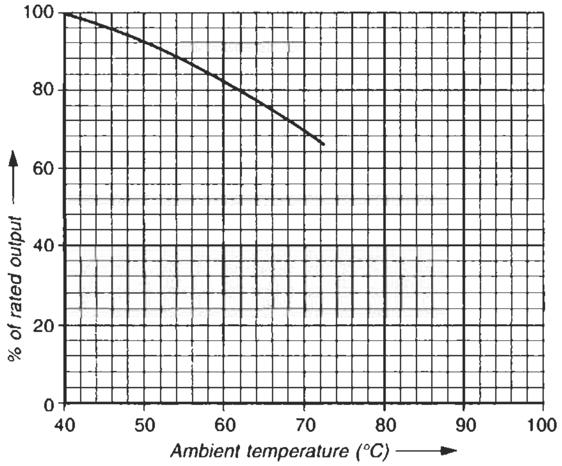

Figure 1.11 Derating curve for higher ambient temperatures for insulation class E or B

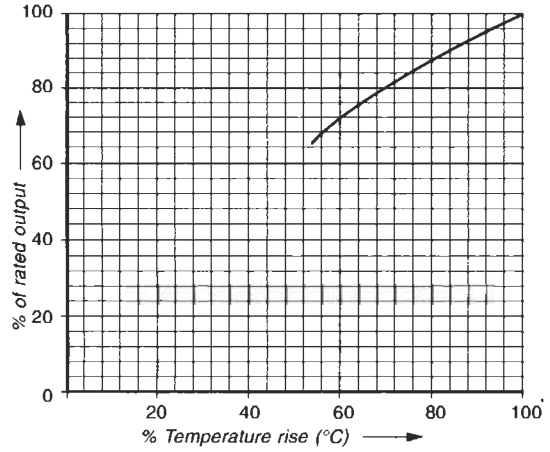

Figure 1.12 Derating curve for temperature rise restriction (drawn for class E insulation)

Total permissible temperature for class B, 40 + 80 = 120°C

End temperature required 50 + 60 = 110°C

Note If the manufacturer can ascertain that a 100 h.p. frame has a reserve capacity such that at full load the temperature rise will not go beyond 60°C, the derating as calculated below will not be necessary.

If the machine is derated for a 60°C temperature rise above 40°C, then the total temperature the motor would attain will be 100°C. In this case, even if the ambient temperature rises to 50°C (the temperature rise remaining the same) the total temperature the motor will attain will be;

= 50° + 60° = 110°C as desired

Therefore, derating the machine only for limiting the temperature rise to 60°C will be adequate.

Derating from Table 1.7 for restricting the temperature rise to 60°C is 84%.

$\therefore$ h.p. required = $\frac{100}{0.84}$ i.e. 119 h.p.

The next nearest size to this is a 125 h.p. motor.

Effect of cooling water inlet temperature

For large motors, which use water as the secondary coolant in a closed circuit, the temperature of the cooling air, i.e. of the primary coolant, varies with the temperature of the cooling water inlet temperature and its rate of flow. For the performance of the motor output, this primary coolant, temperature has the same significance as the ambient temperature for an air-cooled motor. The motor output is unaffected by the ambient temperature. For such motors the output graph is shown in Figure 1.13 at different coolant temperatures and altitudes. The rating at 25°C inlet water temperature for water-cooled machines is the same as for air-cooled machines at an ambient temperature of 40°C.

D *Effect of altitude*

Motors are designed for an altitude up to 1000 m from mean sea level, according to IEC 60034-1. At higher altitudes, cooling reduces due to lower atmospheric pressure and should be compensated as for higher ambient temperature. It is estimated, that for every 100 m above 1000 m, the cooling is affected to the extent of 1% and the required output must be enhanced accordingly. Table 1.8 shows temperature rise restrictions for different altitudes above 1000 m and the corresponding deratings based on Table 1.7. With these values, a graph is also drawn in Figure 1.14, from which the derating for intermediate values can also be ascertained.

Note A slightly higher derating for higher-speed motors, 1500 r.p.m. and above, is required in view of the cooling which in higher-speed motors will be affected more than in lower-speed motors.

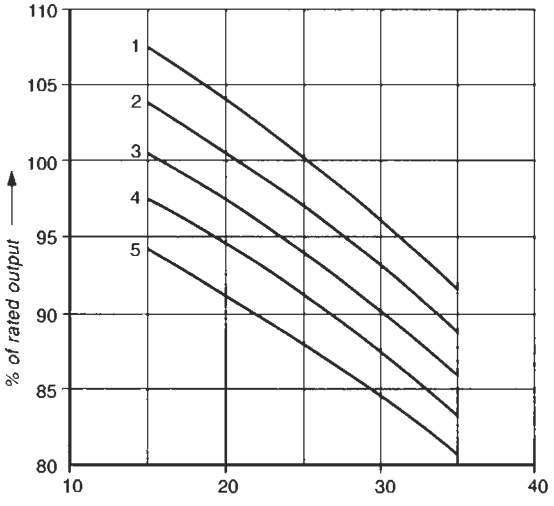

(1) Altitude up to –1000 m
(2) Altitude above 1000–1500 m
(3) Altitude above 1500–2000 m
(4) Altitude above 2000–2500 m
(5) Altitude above 2500–3000 m

Figure 1.13 Effect of the cooling water inlet temperature on output, at different altitudes

Table 1.8 Derating for higher altitudes

	Class E			*Class B*		
Altitude (m)	*Permissible temp. rise above 40°C*		*Permissible output from the curves (%)*	*Permissible temp. rise above 40°C*		*Permissible output from the curves (%)*
	(°C)	*(%)*		*(°C)*	*(%)*	
Up to 1000	75[a]	100	100	80[a]	100	100
Reduction in temperature rise for every 100 m above 1000 m	0.75	1.0	–	0.8	1.0	–
2000	67.5	90	94	72	90	94
3000	60.0	80	87	64	80	87
4000	52.5	70	79	56	70	79

[a] IEC 60034-1 has now substituted this by reduction in the ambient temperature.

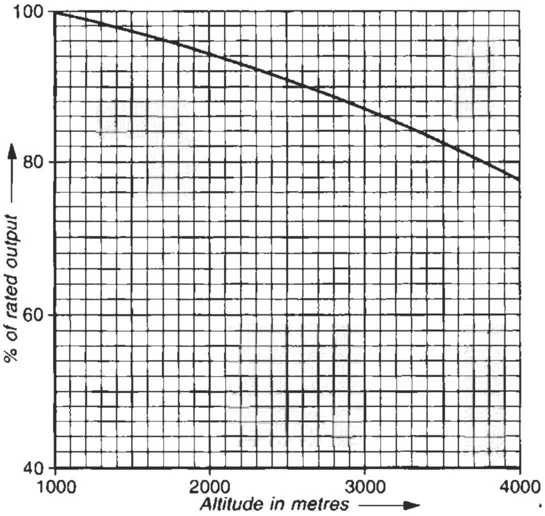

Figure 1.14 Derating curve for higher altitudes

Example 1.5
In the previous example, if altitude be taken as 2000 m, then a further derating by 94% will be essential.

$$\therefore \text{h.p. required} = \frac{100}{0.84 \times 0.94} = 126.8 \text{ h.p.}$$

A 125 h.p. motor may still suffice, which the manufacturer alone can confirm, knowing the maximum capacity of a 125 h.p. frame.

1.7 No-load performance

A study of no-load performance suggests that no-load current, power factor and losses may vary in the following proportions, depending upon the type, size and design of the motor:

1 *No-load current*
This may be 25–50% of the full-load current and sometimes even up to 60%. The higher the rating, the lower will be this current and it will depend upon the magnitude of magnetic induction (type and depth of slots) and air gap, etc.

2 *No-load losses*
- **Windage losses:** A result of friction between the moving parts of the motor and the movement of air, caused by the cooling fan, rotation of the rotor, etc.
- **Core losses** (Section 1.6.2A(iv))
  - Eddy current losses, caused by leakage flux
  - Hysteresis losses, caused by cyclic magnetization of steel.

These may be considered up to 3–8% of the rated output.

3 *No-load power factor*
An induction motor is a highly inductive circuit and the no-load p.f. is therefore quite low. It may be of the order of 0.06–0.10 and sometimes up to 0.15.

The above values give only a preliminary idea of the no-load data of a motor. The exact values for a particular motor may be obtained from the manufacturer.

1.8 Effect of loading on motor performance

The declared efficiency and power factor of a motor are affected by its loading. Irrespective of the load, no-load losses as well as the reactive component of the motor remain constant. The useful stator current, i.e. the phase current minus the no-load current of a normal induction motor, has a power factor as high as 0.9–0.95. But because of the magnetizing current, the p.f. of the motor does not generally exceed 0.8–0.85 at full load. Thus, at loads lower than rated, the magnetizing current remaining the same, the power factor of the motor decreases sharply. The efficiency, however, remains practically constant for up to nearly 70% of load in view of the fact that maximum efficiency occurs at a load when copper losses (I^2R) are equal to the no-load losses. Table 1.9 shows an approximate variation in the power factor and efficiency with the load. From the various tests conducted on different types and sizes of motors, it has been established that the

Table 1.9 Approximate values of efficiency and power factor at three-quarter and half loads corresponding to values at full load

% Efficiency			*Power factor*		
Full load	*Three-quarter load*	*Half load*	*Full load*	*Three-quarter load*	*Half load*
94	93.5	92	0.91	0.89	0.83
93	92.5	91	0.90	0.88	0.81
92	92	91	0.89	0.86	0.78
91	91	90	0.88	0.85	0.76
90	91	90	0.87	0.84	0.75
89	90	89	0.86	0.82	0.72
88	89	88	0.85	0.81	0.70
87	88	87	0.84	0.80	0.69
86	87	86	0.83	0.79	0.67
85	86	85	0.82	0.77	0.66
84	85	84	0.81	0.76	0.65
83	84	83	0.80	0.75	0.64
82	82	81	0.79	0.74	0.62
81	81	79	0.78	0.72	0.61
80	80	77	0.77	0.70	0.59
79	79	76	0.76	0.69	0.57
78	77	74	0.75	0.68	0.56
77	76	73	0.74	0.67	0.54
76	75	72	0.73	0.65	0.52
75	74	71	0.72	0.63	0.50
72	70	64	0.70	0.63	0.50
70	67	60	0.68	0.58	0.48
65	62	67	0.65	0.56	0.46
60	57	46	0.63	0.55	0.45
55	51	45	0.60	0.51	0.42
50	47	35	0.55	0.45	0.35

extent of variation in efficiency and power factor with load is universal for all makes of motors.

1.9 Effect of steel of laminations on core losses

The steel of laminations plays a very significant role in determining the heating and the power factor of a motor. See Section 1.6.2A(iv). A better design with a judicious choice of flux density, steel of laminations and its thickness are essential design parameters for a motor to limit the core losses to a low level.

For a lower range of motors, say up to a frame size of 355, the silicon steel normally used for stator and rotor core laminations is universally 0.5–0.65 mm thick and possesses a high content of silicon for achieving better electromagnetic properties. The average content of silicon in such sheets is of the order of 1.3–0.8% and a core loss of roughly 2.3–3.6 W/kg, determined at a flux density of $1\ W_b/m^2$ and a frequency of 50 Hz. For medium-sized motors, in frames 400–710, silicon steel with a still better content of silicon, of the order of 1.3–1.8% having lower losses of the order of 2.3–1.8 W/kg is preferred, with a thickness of lamination of 0.5–0.35 mm.

For yet larger motors of frame sizes 710 and above, core losses play a more significant role, and require very effective cooling to dissipate the heat generated. Cooling of larger machines, complicated as it is in view of their size and bulk, necessitating core losses to be restricted as low as possible.

To meet this requirement, the use of steel with a still better silicon content and lower losses is imperative. A cold-rolled non-grain oriented (CRNGO) type of sheet steel is generally used for such applications, in the thickness range of 0.35–0.5 mm, with a higher silicon content of the order of 2.0–1.8% and losses as low as 1.0–1.5 W/kg.

When the correct grade of steel is not available the core losses may assume a higher proportion and require a reduction in output or a larger frame than necessary. The data provided above are only for general guidance, and may vary slightly from one manufacturer to another and according to the availability of the silicon-grade steel at the time of manufacture.

1.10 Circle diagram

This is a very useful nomogram to determine the performance of a motor with the help of only no-load and short-circuit test results. In slip-ring motors, it also helps to determine the external resistance required in the rotor circuit to control the speed of the motor and achieve the desired operating performance. Slip-ring motors are discussed in Chapter 5. The concept behind this nomogram is that the locus of the rotor and the stator currents is a circle. Consider the equivalent circuit of an induction motor as shown in Figure 1.15, where

R_1 = stator resistance
X_1 = stator reactance

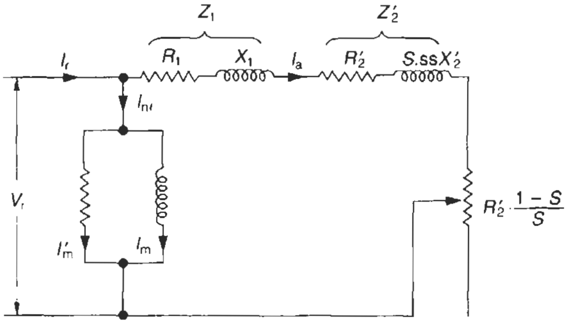

$\bar{I}_{n\ell} = \bar{I}_m' + \bar{I}_m$

I_m' = Loss or active component supplying the hysteresis and eddy current losses to the stator core.

I_m = Magnetizing or reactive component producing the field (flux).

I_a = Active or torque producing component.

Figure 1.15 Simple equivalent circuit diagram of a motor

R_2' = rotor resistance referred to stator
$S._{ss}X_2 = X_2'$ = rotor reactance referred to stator
$I_{n\ell}$ = no-load current

$Re' = R_2' \cdot \dfrac{1-S}{S}$ is the external rotor resistance referred to the stator.

All these values are considered on per phase basis.

1.10.1 Drawing the circle diagram (Figure 1.16)

1. Take V_ℓ on the vertical axis and draw $I_{n\ell}$ at an angle $\phi_{n\ell}$ obtained from the no-load test.
2. From a short-circuit test draw the start-up current I_{st} at an angle ϕ_{st}.
3. Join AB and determine the centre C and draw the circle. The diameter of the circle can also be determined by:

$$AD = \frac{V_\ell}{X_1 + X_2'}$$

4. BB' will determine the locked rotor torque and power loss while the rotor is locked.
Divide BB' at M in the ratio of R_2': R_1 and join AM

where $R_2' = R_2\left(\dfrac{Z_s}{Z_r}\right)^2$

R_2 = rotor resistance per phase
Z_s = number of turns in the stator circuit per phase
Z_r = number of turns in the rotor circuit per phase

5. At load current I_r, i.e. OP, the rotor current I_{rr} is AP. PP_1 will determine the power input per phase and the performance of the motor as follows:
   - (i) Power input = $3 \cdot V_\ell \cdot PP_1$ watts
   - (ii) Core and friction loss = $3 \cdot V_\ell \cdot D_1 D_2$ watts
   - (iii) Stator copper loss = $3 \cdot V_\ell \cdot M_1 P_0$ watts
   - (iv) Rotor copper loss = $3 \cdot V_\ell \cdot bM_1$ watts
   - (v) Motor output = $3 \cdot V_\ell \cdot Pb$ watts
   AB is known as the output line, since the output is measured above this.
   - (vi) Running torque,
   $T = 3 \cdot V_\ell \cdot PM_1$ synchronous watts

   and since $3 \cdot V_\ell \cdot PM_1 = \dfrac{T \cdot N_r}{0.974}$

   $$\therefore T = \frac{3 \cdot V_\ell \cdot 0.974 \cdot PM_1}{N_r} \text{ mkg.}$$

   This is the maximum torque that can be developed by the rotor during a run, but the useful torque will be in accordance to output, i.e.

   $$\frac{3 \cdot V_\ell \cdot Pb}{N_r} \cdot 0.974 \text{ mkg}$$

   Since the maximum torque is measured by line AM, it is known as the torque line.
   - (vii) Starting torque or short-circuit torque

   $$T_{st} = 3 \cdot V_\ell \cdot \frac{BM}{N_r} \cdot 0.974$$

   - (viii) Full-load slip, $S = \dfrac{bM_1}{PM_1}$

1.10.2 Inference from the circle diagram

The maximum value of the output and torque of the motor can be obtained by dropping perpendiculars CC_1 and CC_3 on the output and torque lines respectively from the centre C. C_1C_2 and C_3C_4 indicate the magnitude of the maximum output and torque, respectively, that the motor can develop. This torque is the pull-out torque T_{po}. In slip-ring motors it can be obtained at any speed on the normal speed–torque curve by inserting a suitable resistance into the rotor circuit to vary the slip.

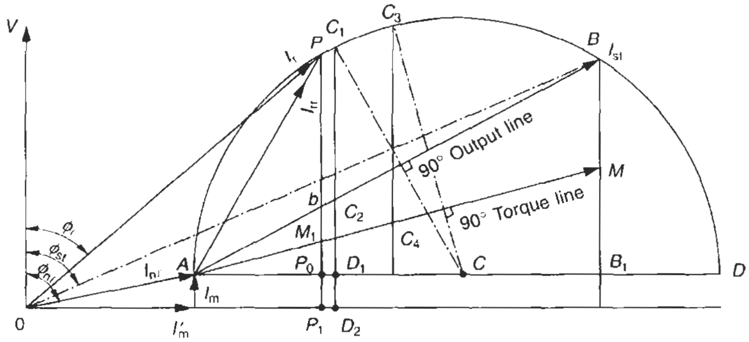

Figure 1.16 Circle diagram

Under normal conditions, the starting current is too high, whereas the corresponding starting torque is not so high. If we can shift the I_{st} point to the left, or in other words increase the slip, the torque will increase and I_{st} will decrease. This is used, in a slip-ring motor to control both T_{st} and I_{st} with suitable external resistances. For instance, if the starting torque is required to be equal to $T_{po,}$ i.e. C_3C_4, then the start-up current should be controlled to OC_3. The starting resistance, $R_{st.}$ therefore should be such as to achieve this current during start-up:

$$\text{i.e.}\quad R_{st} = \frac{{}_{ss}e_2}{AC_3}$$

and external resistance $R_e = R_{st} - R_2$

Corollary
The higher the full load slip, the higher will be the rotor losses and rotor heat. This is clear from the circle diagram and also from equation (1.9). An attempt to limit the start-up current by increasing the slip and the rotor resistance in a squirrel cage motor may thus jeopardize the motor's performance. The selection of starting current and rotor resistance is thus a compromise to achieve optimum performance.

1.11 Types of induction motors

These are of two types:

1 Squirrel cage rotor
2 Slip-ring or wound rotor

In a squirrel cage motor the rotor winding is made of solid metallic rods short-circuited at both ends of the rotor. Short-circuiting of rotor bars leads to fixed rotor parameters. In slip-ring motors the rotor is also wound like the stator and the six winding terminals are connected to a slip-ring assembly. This gives an opportunity to vary the rotor circuit impedance by adding external resistance and thus vary the rotor circuit parameters to achieve the required performance.

Although it may seem easy to alter the speed–torque and speed–current characteristics of such a motor through its rotor circuit, the use of such motors is recommended only for specific applications where the use of a squirrel cage motor may not be suitable. The reason is its slip-rings and the brushes which are a source of constant maintenance due to arcing between the rings and the brushes, besides a much higher initial cost and equally expensive control gears.

Specific applications for such motors are rolling mills, rice mills, paper mills and cranes etc. for one or more of the following reasons:

1 To contain the start-up inrush current, as a result of low start-up impedance and to control the same as needed through external resistance in the rotor circuit.
2 To provide a smoother start.
3 To meet the requirement of a high start-up torque and yet contain the start-up inrush current.
4 To meet the load demand for more frequent starts and reversals, as for cranes and other hoisting applications.
5 To achieve the required speed variation through variation in rotor circuit impedance.

Note The latest trend, however, is to select only squirrel cage motors as far as practicable and yet fulfil most of the above load requirements. Fluid couplings and static (IGBT or thyristor) drives can meet the above requirements by starting at no load or light load and controlling the speed as desired, besides undertaking energy conservation. See also Chapters 6 and 8.

1.11.1 Choice of voltage

Because of heavy start-up inrush currents, the use of LT motors should be preferred up to a medium sized ratings, say, up to 160 kW, in squirrel cage motors and up to 750 kW in slip-ring motors. For still higher ratings, HT motors should be used.

1.12 Mounting of motors

The common types of mountings are illustrated in IEC 60034-7, and the most frequently used are shown in Figure 1.17. The legends to represent these mountings are given below:

1	Floor mounting	*B*3
2	Wall mounting	*B*6/*B*7
3	Ceiling mounting	*B*8
4	Wall mounting	*V*5
5	Wall mounting	*V*6
6	Flange mounting	*B*5
7	Flange mounting	*V*1
8	Flange mounting	*V*3
9	Foot-cum-flange mounting	*B*3/*B*5
10	Foot-cum-flanges on both sides	*B*17

Note For brevity, the prefix *IM*, representing 'International Mounting', has been omitted from these legends. In common practice the different types of mountings are represented as noted above. While designation *B* represents a horizontal mounting, designation *V* represents a vertical mounting. For more details and numerical designation of motors refer to IEC 60034-7.

Care should be taken in selecting the mounting for applications where the motor weight would apparently fall on its flange or the foot, as in mountings *B*5, *B*6, *B*8, *V*3, *V*5 and *V*6. In such mountings, the foot or the flange is subject to a shearing force due to a cantilever effect and is vulnerable to breakage. For small sizes, where the weight of the motor may not matter so much, these types of mountings can be employed, otherwise reinforcement may be necessary either to the foot or to the flange, if possible. For larger motors it is advisable to select an alternative mounting.

1.13 Enclosures

A motor can be constructed in different enclosures to suit a particular location as follows.

1.13.1 Protected motors (degree of protection IP 12, 21 or 23)

1 Screen protected (SP): Not a common enclosure. For locations clear of dust and water.

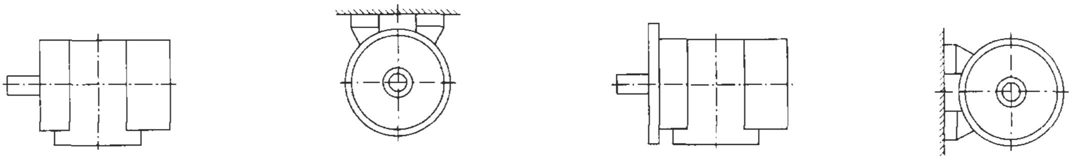

Foot mounting (B3) Foot mounting (B8) Flange mounting (B35) Foot mounting (B6)

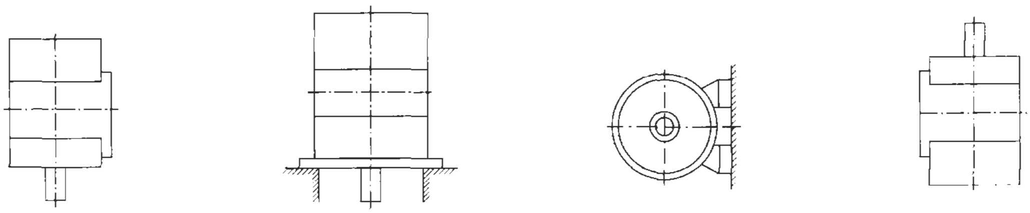

Foot mounting (V5) Flange mounting (V1) Foot mounting (B7) Foot mounting (V6)

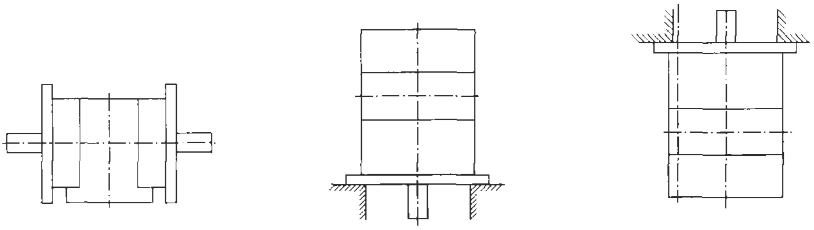

Foot-cum-flange mounting (B17) Flange mounting (B5) Flange mounting (V3)

Figure 1.17 *Types of mounting arrangements*

2 Screen protected, drip proof (SPDP): As above, but with additional protection against dripping of water Figures 1.18(a)–(d).

3 Splash proof: As in (2) but, unless the degree of protection according to IEC 60034-5 is specified, this remains a vague term and is not in frequent use.

1.13.2 Totally enclosed fan-cooled motors (TEFC) (degree of protection IP 44, 54 or 55)

These motors are suitable for locations prone to dust, coal dust and metal particles etc. and occasional water spray and rain (Figures 1.19(a) and (b)).

Note SPDP motors also have a cooling fan but their surface is plain, whereas TEFC motors have fins on their housings that add to their cooling surface. Refer to Figures 1.18(a)–(c) and 1.19(a) and (b).

1.14 Weatherproof motors (WP) (degree of protection IP 55)

These are an improvised version of a totally enclosed motor to protect its live parts from ingress of water, rain, snow or airborne particles etc. This is achieved by providing them with additional protection such as labyrinths at joints such as bearing end covers, centrifugal discs, end shields and terminal box and giving the outer surface a special coat of paint to protect against unfavourable weather conditions.

1.14.1 NEMA enclosures

These have only a historical significance, in the light of better defined enclosures now available. They are briefly defined here:

- **Type I** A weather-protected Type I machine is an open machine with its ventilating passages so constructed as to minimize the entrance of rain, snow and air-borne particles to the electrical parts and having its ventilated openings so constructed as to prevent the passage of a cylindrical rod 3/4-inch in diameter.
- **Type II** A weather-protected Type II machine will have, in addition to the enclosure defined for a weather-protected Type I machine, ventilating passages at both intake and discharge ends so that high-velocity air and air-borne particles blown into the machine by storms or high winds can be discharged without entering the internal ventilating passages leading directly to the electrical parts of the machine. The normal path of the ventilating air which enters the electrical parts of the machine is so arranged by baffling or separate housings that it provides at least three abrupt changes in its direction, none of them being less than 90°. In addition, an area of low velocity not exceeding 600 feet per minute is also provided in the intake air path to minimize the possibility of moisture or dirt being carried into the electrical parts of the machine.

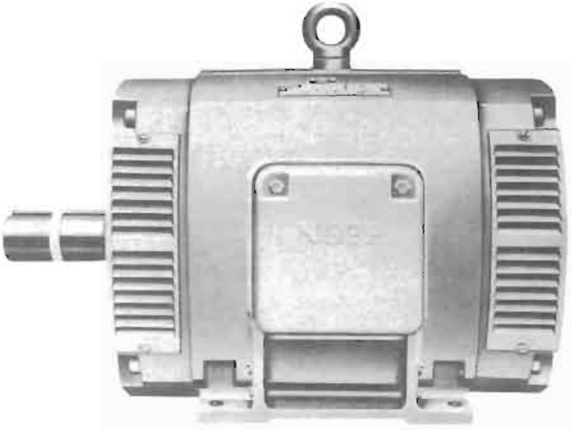

Figure 1.18(a) Screen protected drip proof (SPDP) squirrel cage motor (Cooling system ICOA1)

Figure 1.18(b) Screen protected drip proof slip ring motor (Cooling system ICOA1)

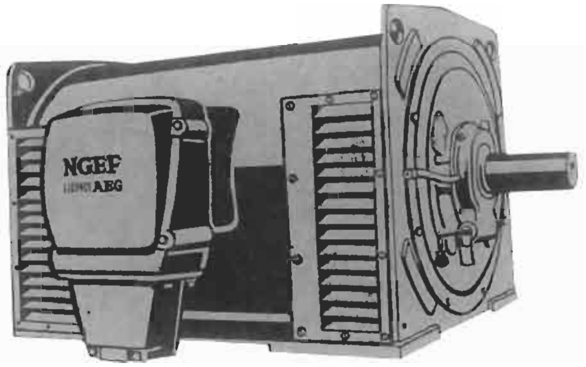

Figure 1.18(c) Large SPDP squirrel cage motor (enclosure IP 12) (Cooling system ICOA1)

1 Access for checking air gap
2 Air-deflecting baffle
3 Coil bracing ring
4 Fan
5 Rotor end ring
6 Rotor bars
7 Stator core
8 Fully-formed coils of the two layer stator winding
10 Core duct separator
11 Preformed coil in section
12 End winding connections
13 Bearing endshield
14 Terminal box with bolted on cable sealing end
15 Shaft
16 Grease ejector handle
17 Grease collector
18 Anti-friction bearing with grease regulator
19 Grease impeller

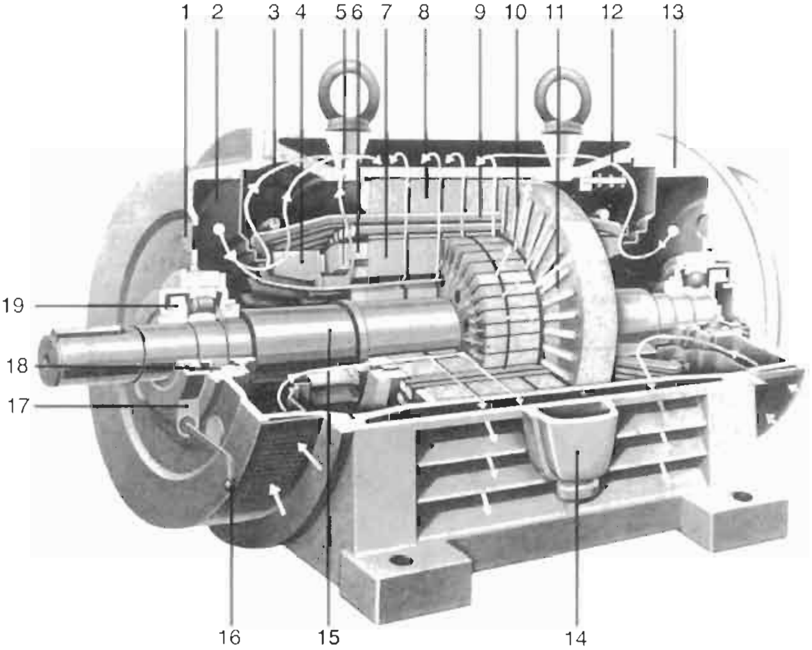

Figure 1.18(d) Cross-sectional view of a large screen protected motor showing the cooling circuit (Cooling system ICOA1) (Courtesy: NGEF Ltd)

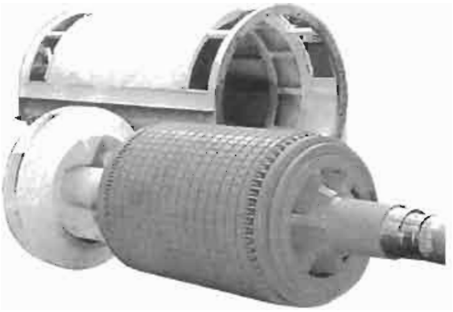

Squirrel cage rotor

Figure 1.19(a) TEFC squirrel cage motor (Cooling system ICOA1) (Courtesy: NGEF Ltd)

Slip ring rotor

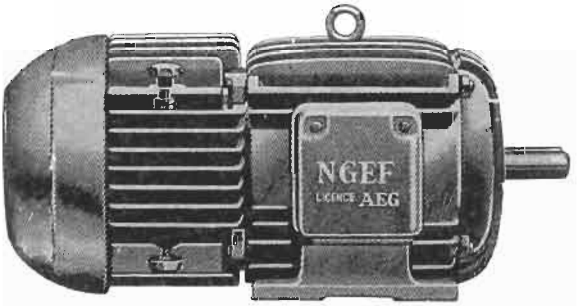

Figure 1.19(b) TEFC slip ring motor (Cooling system ICOA1 (Courtesy: NGEF Ltd)

1.15 Degree of protection

The nomenclatures used above to define an enclosure were earlier interpreted in different ways by different manufacturers. To achieve harmonization, IEC 60034-1 has eliminated the use of these codes. Instead, designation IP, followed by two characteristic numerals according to IEC 60034-5, is now introduced to define an enclosure. The first characteristic numeral defines the protection of personnel from contact with live or moving parts inside the enclosure and of machines against the ingress of solid foreign bodies. The second numeral defines the type of protection against ingress of water. Tables 1.10 and 1.11 show these requirements.

Table 1.10 Types of protection against contact with live or moving parts

First characteristic number as in IEC 60034-5	*Type of protection*
0	No special protection of persons against accidental or inadvertent contact with live or moving parts inside the enclosure. No protection of equipment against ingress of solid foreign bodies.
1	Protection against accidental or inadvertent contact with live and moving parts inside the enclosure by a larger surface of the human body, for example a hand, but not against deliberate access to such parts. Protection against ingress of large solid foreign bodies (diameter greater than 50 mm).
2	Protection against contact with live or moving parts inside the enclosure by fingers. Protection against ingress of small solid foreign bodies (diameter greater than 12 mm).
3	Protection against contact with live or moving parts inside the enclosure by tools, wires or objects having a thickness greater than 2.5 mm. Protection against ingress of small solid foreign bodies (diameter greater than 2.5 mm).
4	Protection against contact with live or moving parts inside the enclosure by tools, wires, or such objects of thicknesses greater than 1 mm. Protection against ingress of small solid foreign bodies (diameter greater than 1 mm) excluding the ventilation openings (intake and discharge) and the drain hole of the enclosed machine which may have degree 2 protection.
5	Complete protection against contact with live or moving parts inside the enclosure. Protection against harmful deposit of dust. The ingress of duct is not totally prevented, but dust will not be able to enter in an amount sufficient to harm the machine.
6	Totally dust-tight. No ingress of dust.

Table 1.11 Types of Protection against ingress of water

Second characteristic number	*Type of protection*
0	No special protection
1	Dripping water (vertically falling droplets) will have no harmful effect.
2	Droplets of water falling at any angle up to 15° from the vertical will have no harmful effect.
3	Water falling as a spray at an angle equal to or smaller than 60° from the vertical will have no harmful effect.
4	Water splashed under stated conditions against the machine from any direction will have no harmful effect.
5	Water injected under stated conditions through a nozzle against the machine from any direction will have no harmful effect.
6	Water from heavy seas will not enter the machine in a harmful quantity.
7	Ingress of water in the machine immersed in water under stated conditions of pressure and time will not be possible in a harmful quantity.
8	Ingress of water into the machine immersed in water under specified pressure and for an indefinite time will not be possible in a harmful quantity.

1.16 Cooling systems in large motors

The cooling system in large motors becomes vital, as one fan cannot cover the entire length of the motor body or cool the inside bulk of the motor windings. Now a more judicious design is required for adequate cooling to eliminate any hot spots in the rotor, stator or the overhangs of the stator windings and bearings etc. There are many cooling systems adopted by various manufacturers, depending upon the size of the machine and the heat generated in various parts during full-load continuous running. The cooling system may be self-ventilated, closed circuit, not requiring any external source to augment the cooling system, or a forced cooling system, employing an external source, to basically work as heat exchangers to dissipate the heat. Thus, there may be a variety of cooling systems to cool a large machine.

IEC 60034-6 has specified a number of probable cooling systems, as adopted by various manufacturers. The more commonly used practices are shown in Table 1.12. According to this specification any cooling system may be expressed by the letters IC (international cooling) followed by

1 A number to indicate the arrangement of the cooling circuit as in column 1 of Table 1.12.
2 Each cooling circuit is then identified for the primary cooling medium by a letter A, H or W etc. which specifies the coolant as noted below:

For gases	Air – A
	Freon – F
	Hydrogen – H
	Nitrogen – N
	Carbon dioxide – C
For liquids	Water – W
	Oil – U

3 The letter is then followed by a number, describing the method to circulate the coolant as in column 3 of Table 1.12.
4 Another letter and a number are added after the above to describe the secondary cooling system.

Example

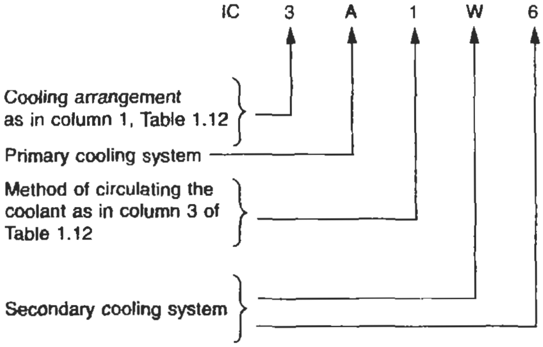

Depending upon its size, a machine may adopt more than one cooling system, with separate systems for the stator and the rotor and sometimes even for bearings. To define the cooling system of such a machine, each system must be separately described. For more details refer to IEC 60034-6.

The following are some of the more prevalent systems for totally enclosed large machines:

Tube Ventilated Self Cooled (TV)
Closed Air Circuit Water Cooled (CACW)
Closed Air Circuit Air Cooled (CACA)

The above cooling systems will generally comprise the following:

1 *Tube ventilation* In this system cooling tubes which work as heat exchangers are welded between the core packet and the outer frame and are open only to the atmosphere. See to Figures 1.20 (a)–(c). One fan inside the stator, mounted on the rotor shaft, transfers the internal hot air through the tube walls which form the internal closed cooling circuit. A second fan mounted outside at the NDE blows out the internal hot air of the tubes to the atmosphere and replaces it with fresh cool air from the other side. This forms a separate external cooling circuit.
2 *Closed Air Circuit Water Cooled (CACW)* The motor's interior hot air forms one part of the closed air circuit that is circulated by the motor's internal fans. A separate heat exchanger is mounted on top of the motor as the cooling water circuit. This forms the second cooling circuit.

Table 1.12 Normal systems of cooling for totally enclosed large machines

First characteristic number to indicate the cooling system 1	*Description* 2	*Second characteristic number for means of supplying power to circulate the coolant* 3	*Description* 4
0	Free circulation of the coolant from the machine to the surrounding medium	0	**Free convection:** No external power source is essential. Heat dissipation is achieved through natural convection like a surface cooled motor
1	**Inlet pipe-circulation:** The coolant flows to the machine through inlet pipes from a source other than the surrounding medium and then freely discharges to the surrounding medium (as in the use of separately driven blowers)	1	**Self-circulation:** Movement of the coolant is normally through a fan mounted on the rotor shaft, like a normal fan cooled motor (Figures 1.18(a)–(d) and 1.19(a) and (b)
2	**Outlet pipe circulation:** The coolant is drawn from the surrounding medium but is discharged remotely through the pipes	2	–
3	**Inlet and outlet pipe circulation:** The coolant flows from a source other than the surrounding medium through the inlet pipes and is discharged remotely through the outlet pipes	3	–
4	**Frame surface cooled** (using the surrounding medium): The primary coolant is circulated in a closed circuit and dissipates heat to the secondary coolant, which is the surrounding medium in contact with the outside surface of the machine. The surface may be smooth or ribbed, to improve on heat transfer efficiency (as, in a TEFC or tube ventilated motor (Figures 1.19 and 1.20)	4	–
5	**Integral heat exchanger** (using surrounding medium): As at No. 4 above, except that the medium surrounding the machine is a heat exchanger, which is built-in as an integral part of the machine like a totally enclosed, tube-ventilated motor (Figure 1.20)	5	**Circulation by integral independent component:** Like a fan, driven by an electric motor, and the power is drawn from a separate source, rather than the main machine itself
6	**Machine-mounted heat exchanger** (using the surrounding medium): As at No. 5 above, except that the heat exchanger is neither externally mounted nor forms an integral part of the machine. Rather it is mounted as an independent unit, directly on the machine (Figures 1.21 and 1.22)	6	**Circulation by independent component mounted on the machine**: As at No. 5 above, but the movement of the coolant is through an intermediate component and mounted on the machine and not an integral part of the machine
7	**Integral heat exchanger** (not using the surrounding medium): As at No. 5 above, except that the cooling medium is different from the surrounding medium. It can be liquid or gas	7	**Circulation by an entirely separate system**: As at No. 6 above, but the circulation of the coolant is by an entirely independent system, not forming a part of the main machine in any way and mounted separately like a water-distribution system or a gas-circulation system
8	**Machine-mounted heat exchanger** (not using the surrounding medium): As at No. '6' above except that the cooling medium is different from the surrounding medium. It can be liquid or gas (Figures 1.21 and 1.22)	8	**Circulation by relative displacement**: As at No. 0 above, except that instead of surface cooling the cooling is achieved through the relative movement of the coolant over the machine
9	**Separately mounted heat exchanger**: The primary coolant is circulated in a closed circuit and dissipates heat to the secondary coolant. It can be a heat exchanger as an independent unit separately mounted	9	This numeral is used for circulation by any means other than stated above

Figure 1.20(a) Totally enclosed tube ventilated (TETV) squirrel cage motor (Cooling system IC5A111) (Courtesy: BHEL)

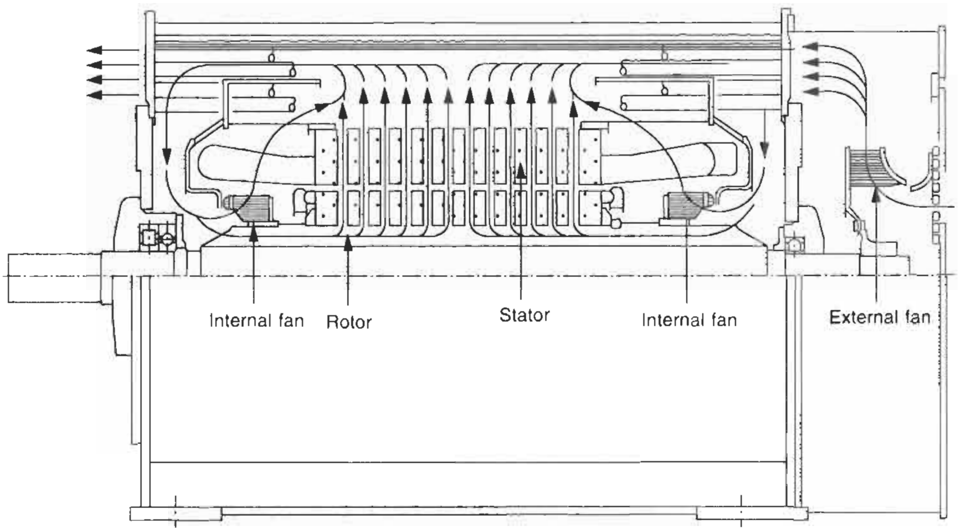

Figure 1.20(b) A typical cooling circuit type IC5A1A1

1 Lifting lug
2 Air baffle
3 Coil bracing ring
4 Cooling tubes
5 Short-circuiting ring
6 Stator core packet
7 Two-layer fully formed coils of stator winding
8 Air guide shell
9 Bearing endshield
10 Fan for outer air circuit
11 Fan hood with protective grid for cooling air intake
12 Handle for emptying grease collecting box
13 Welded frame
14 Terminal box with cable sealing box
15 Rotor core packet
16 Section bars of the squirrel cage
17 Rotor end plate
18 Grease collecting box
19 Grease thrower of labyrinth seal
20 Opening for checking air gap
21 Fan for inner air circuit

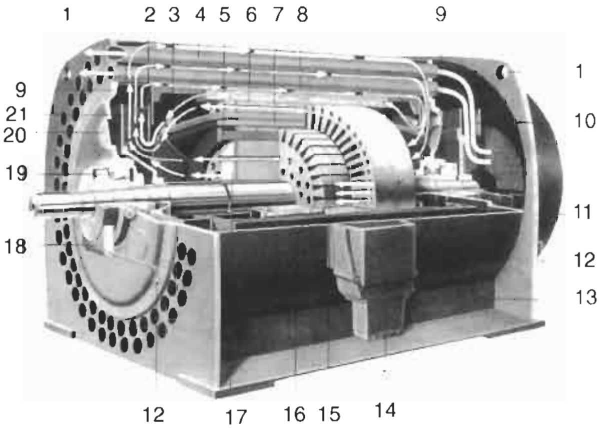

Figure 1.20(c) Cross-sectional view of a large tube-ventilated squirrel cage motor showing the cooling circuit (Cooling system IC5A1A1) (Courtesy: NGEF Ltd)

The heat exchanger consists of a large number of cooling tubes connected to the stator through headers/ducts. The tubes may have coils of copper wire wound around them to enhance their cooling capacity. Filtered water (soft water), to avoid scaling of tubes, is circulated through these tubes. The hot air circulating through the motor stator and rotor ducts passes through these heat exchangers and becomes cooled. See Figure 1.21.

3 *Closed Air Circuit Air Cooled (CACA)* This cooling system is the same as for CACW except that, instead of water, air flows through the top-mounted heat exchangers. See Figures 1.21 and 1.22.

1.17 Single-phase motors

Application
- Domestic appliances
- Small machine tools
- Industrial and domestic fans, pumps, polishers, grinders, compressors and blowers etc.

1.18 Theory of operation

A single-phase winding cannot develop a rotating field, unlike a multiphase winding. But once it is rotated, it will continue rotating even when the rotating force is removed so long as the winding is connected to a supply source. To provide a rotating magnetic field, an auxiliary winding or start winding is therefore necessary across the main winding. It is placed at 90° from the main winding and connected in parallel to it, as shown in Figures 1.23 and 1.24. The impedances of the two windings are kept so that they are able to provide a phase shift between their own magnetic fields. This phase shift provides a rotating magnetic field as already discussed. The auxiliary windings may be one of the following types:

1 Split phase winding
When another inductive winding is placed across the main winding (Figure 1.23(a) and (b)) so that R/X_{L1} of the auxiliary winding is high, a phase shift will occur between the two windings. This shift will be low and much less than 90°, as explained in the phasor diagram (Figure 1.23(c)). But it can be made adequate by increasing the R, so that a rotating field may develop sufficiently to rotate the rotor. The higher the ratio R/X_{L1}, the higher will be the starting torque, as R/X_{L1} will move closer to the applied voltage V_1 and help to increase the phase shift. In such motors the starting torque, T_{st}, is low and running speed–torque characteristics poor as illustrated in Figure 1.23(d). Figure 1.23(e) shows a general view.

2 Capacitor start winding
If the inductive auxiliary winding is replaced by a capacitive winding by introducing a capacitor unit in series with it (Figure 1.24(a) and (b)) the phase shift will approach 90° (Figure 1.24(c)) and develop a high starting torque. When this capacitor is removed on a run, the running torque characteristics become the same as for a split-phase motor. Figure 1.24(d) illustrates a rough speed–torque characteristics of such a motor.

In both the above methods a speed-operated centrifugal switch is provided with auxiliary winding to disconnect the winding when the motor has reached about 75–85% of its rated speed. Figure 1.24(e) shows a general view.

3 Capacitor start and capacitor run windings
- When the running torque requirement is high but the starting torque requirement not as high then a

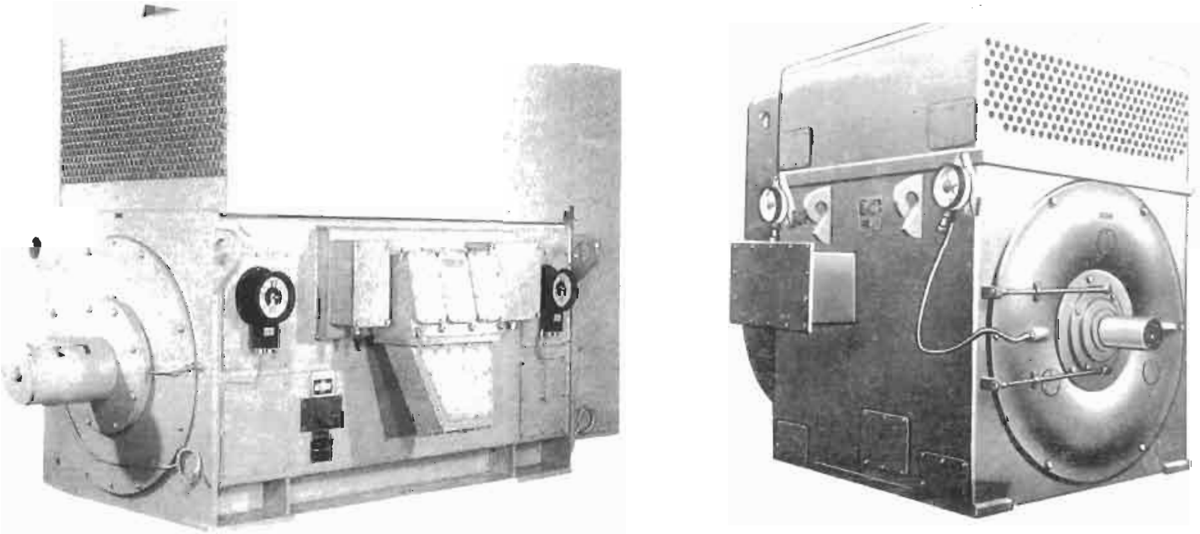

Figure 1.21 Closed air circuit, air cooled (CACA) squirrel cage motors (likely cooling systems IC6A1A1 or IC6A1A6) (Courtesy: BHEL)

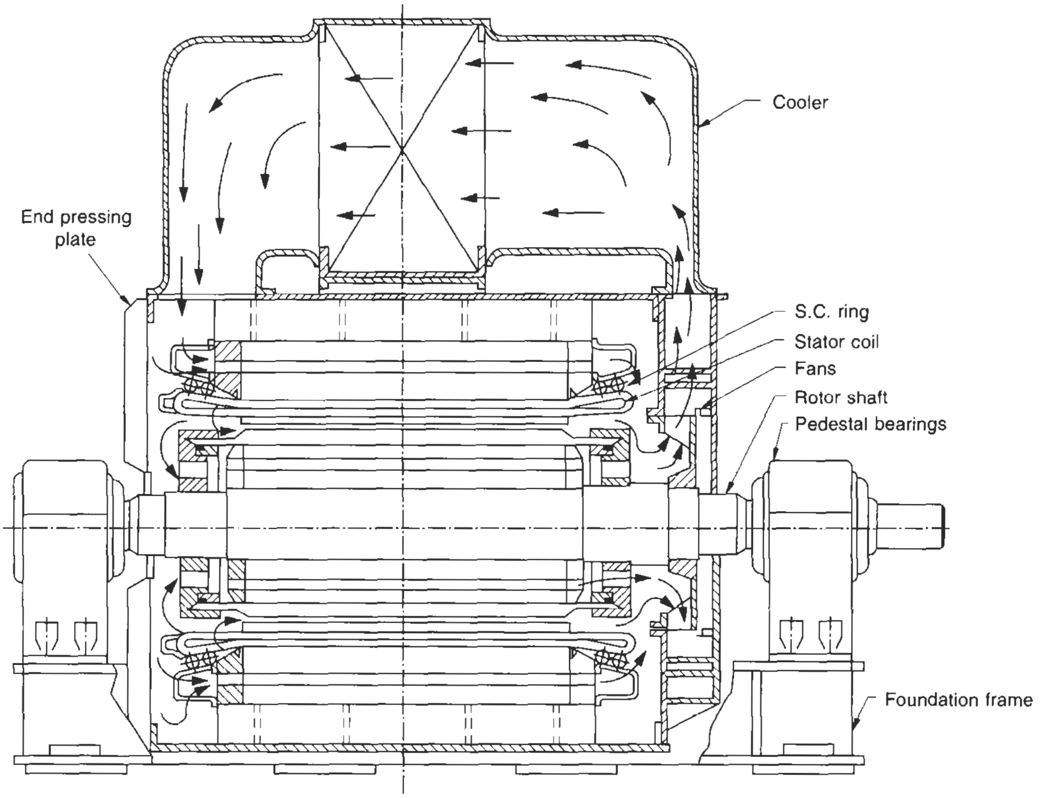

Figure 1.22 Cooling cycle for a CACA (IC6A1A6) or CACW(1C9A6W7) motor

capacitor of a low value, so that the capacitor current may remain less than the magnetizing components of the two windings, may be provided and the disconnecting switch removed. Figures 1.25(a_1) and (b_1) are drawn with the switch removed. The starting torque in this case may not be very high but the running torque would be higher as required. The value of capacitor C_1 would depend upon the value of L_1 and the running torque requirement.

- We can improve the starting performance of the above method by providing C in two parts, one for start C_2, of a much higher value, depending upon the requirement of T_{st}, through a disconnect switch (Figures 1.25(a_2) and (b_2)), and the other C_1, for a run of a much lower value (so that $I_{C1} < I_m$).

Notes

1 The size of capacitors C, C_1 or C_2 will depend upon the horsepower of the motor and the torque requirement of the load. For starting duty capacitors generally in the range of 30–100 μF and for a run of 2–20 μF will be adequate.

2 Whenever frequent switchings are likely, high transient voltages may develop and harm the motor windings and the capacitors. Fast discharge facilities must be provided across the capacitor terminals to damp such transients quickly. See Section 25.7, for more details on discharge devices.

4 *Shaded pole motors*

Applications requiring extremely small motors, in both size and horsepower, may be designed for shaded pole construction. Electronic drives, cassette players, recorders and similar applications need an extremely small size of motor, as small as 1 W ($^1/_{746}$ h.p.). Such motors can be designed in shaded pole.

The stator is of a salient pole type that protrudes outwards within the stator housing similar to a d.c. machine but is made of steel laminations. A small side end portion of each pole is split and fitted with a heavy copper ring as shown in Figure 1.26(a). This ring is called a shading coil, as it shades the normal flux distribution through that portion of the pole and substitutes for a split phase and provides the required second winding. The stator poles are wound as usual and the end terminals are brought out to receive the a.c. supply. Figure 1.26(b) illustrates a simple two-pole machine. When the voltage is applied across the stator windings, a magnetic flux is developed in the entire pole, which cuts the copper ring arranged at the tip of the pole. The main flux, thus cutting the copper coil (ring), induces a current in the ring.

The current in the copper ring opposes the main flux in that area of the pole and behaves like an artificial second winding, and develops a rotating field. Although the torque so developed is extremely low, it is enough to rotate such small drives, requiring an extremely low starting torque, of the order of 40–50% of the full load torque.

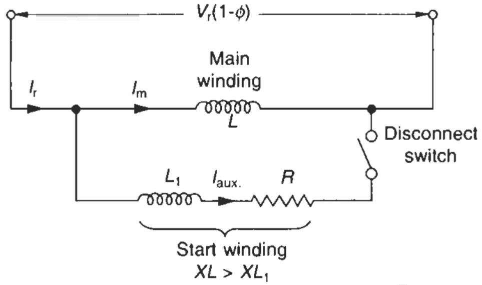

Note Phase shift is obtained by increasing $\frac{R}{XL_1}$

(a) Schematic diagram

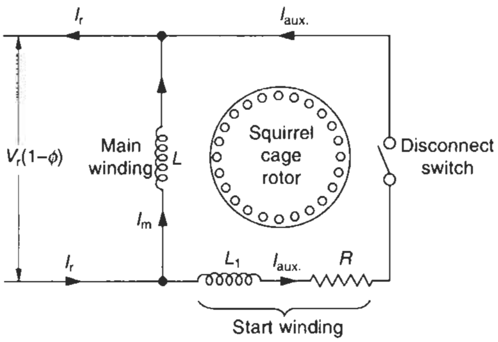

(b) General arrangement

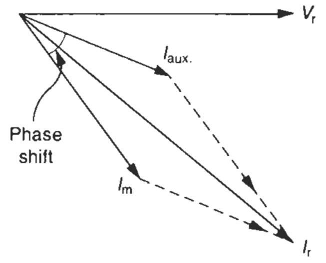

(c) Phasor diagram
Low starting and running torques

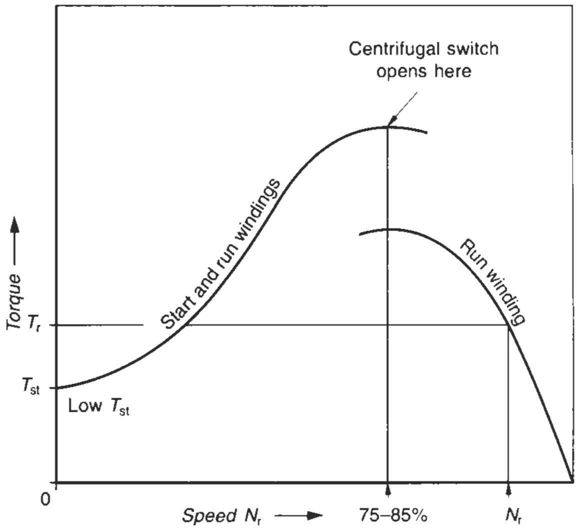

(d) Speed-torque characteristics of a split phase motor

(e) Split phase 1–ϕ motor [Courtesy: AUE (GE Motors)]

Figure 1.23 Split-phase winding

Since there is only one winding and the poles are already shaded at one particular end, the direction of the rotating flux is fixed and so is the direction of rotation of the rotor. The direction of rotation cannot be altered as in the earlier cases. Since there is only one winding and no need of a speed-operated centrifugal switch, these motors require almost no operational maintenance.

5 *Universal motors*

These are series motors and are relatively compact and lightweight compared to an a.c. motor. The use of such motors is therefore common for hand tools and home appliances and also for such applications that require a high speed (above 3200 r.p.m.) which is not possible in an a.c. machine. Likely applications are polishers, grinders and mixers. This motor runs equally well on both a.c. and d.c. sources of supply.

The motor is designed conventionally, with a laminated stator, a static magnetic field and a rotating armature, as shown in Figure 1.27(a) and (b). The armature and the field windings are connected in series through two brushes, fitted on the armature extended commutator assembly, to obtain the same direction of field and armature currents. Thus, when the direction of the line current reverses, the field and armature currents also reverse. When operated on a.c., the torque produced is in pulses, one pulse in each half cycle as illustrated in Figure 1.27(c). The normal characteristics for such motors are also illustrated in Figure 1.27(d). The no-load speed may be designed very high, to the order of 2000–20 000 r.p.m. but the speed on load may be around 50–80% of the no-load speed due to windage and friction losses, which constitute a higher percentage for such small to very small motors ($^1/_{10}$ to 1 h.p.). The required output speed for the type of application can be obtained through the use of gears.

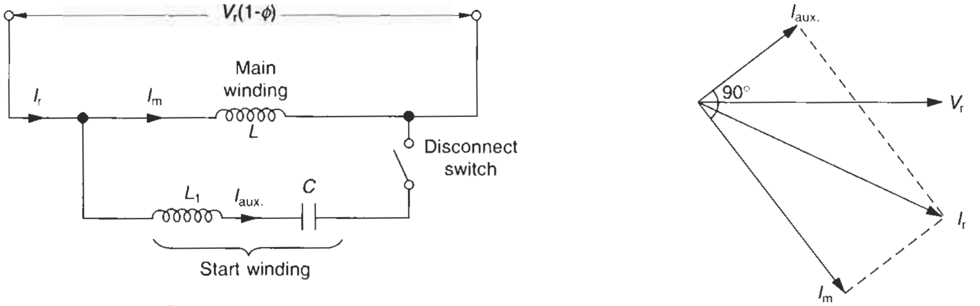

(a) Schematic diagram

(c) Phasor diagram
High start but low running torques

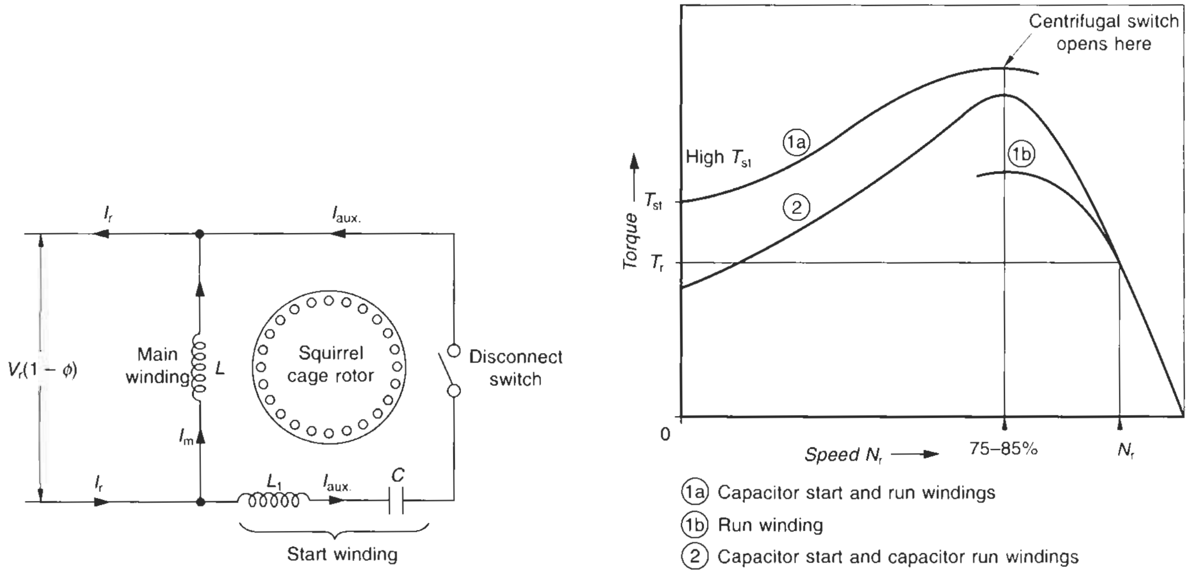

(b) General arrangement

(d) Speed–torque characteristics of capacitor start and capacitor run motors

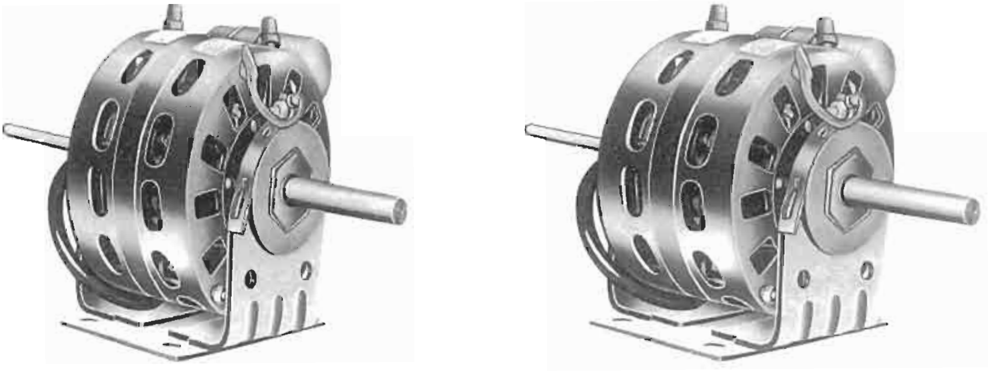

(e) Capacitor start or capacitor start-capacitor run 1-ϕ motor

Figure 1.24 Capacitor start winding

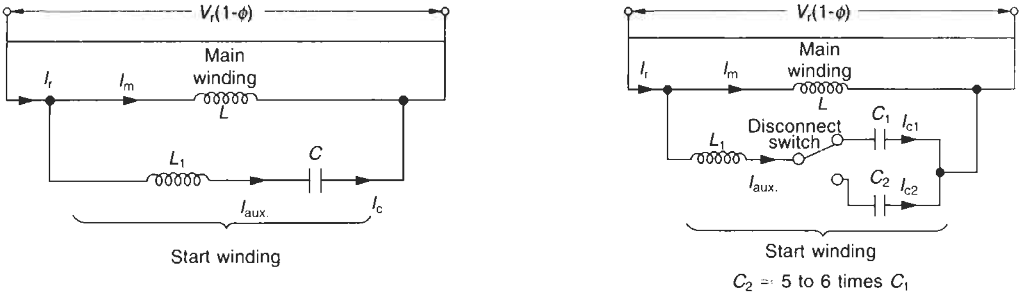

(a1) Schematic diagram

(a2) Schematic diagram

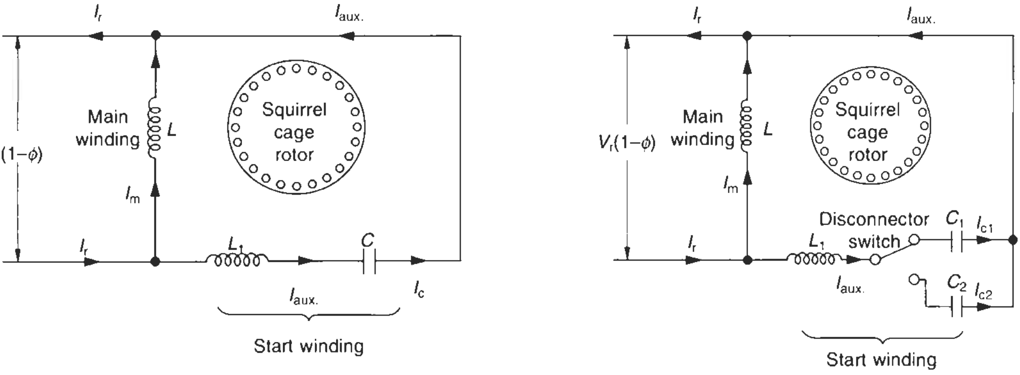

General arrangement

(b1) Low start but high running torques

C_1 = Run capacitor
C_2 = Start capacitor
General arrangement

(b2) High start and high running torques

Figure 1.25 Capacitor start and capacitor run windings

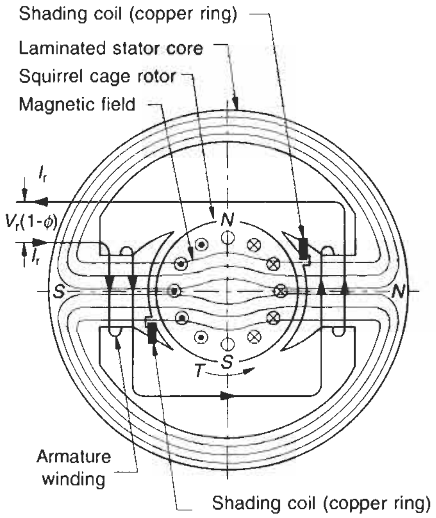

Figure 1.26(a) General arrangement of a shaded pole motor

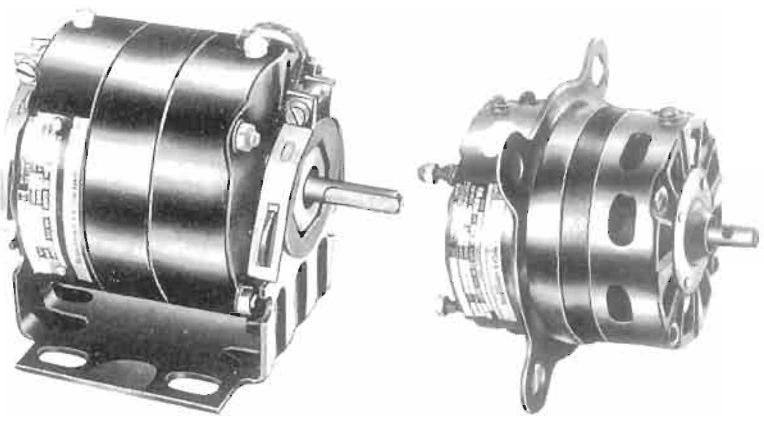

Figure 1.26(b) Shaded pole 1-ϕ motor [(Courtesy: AUE (GE Motors)]

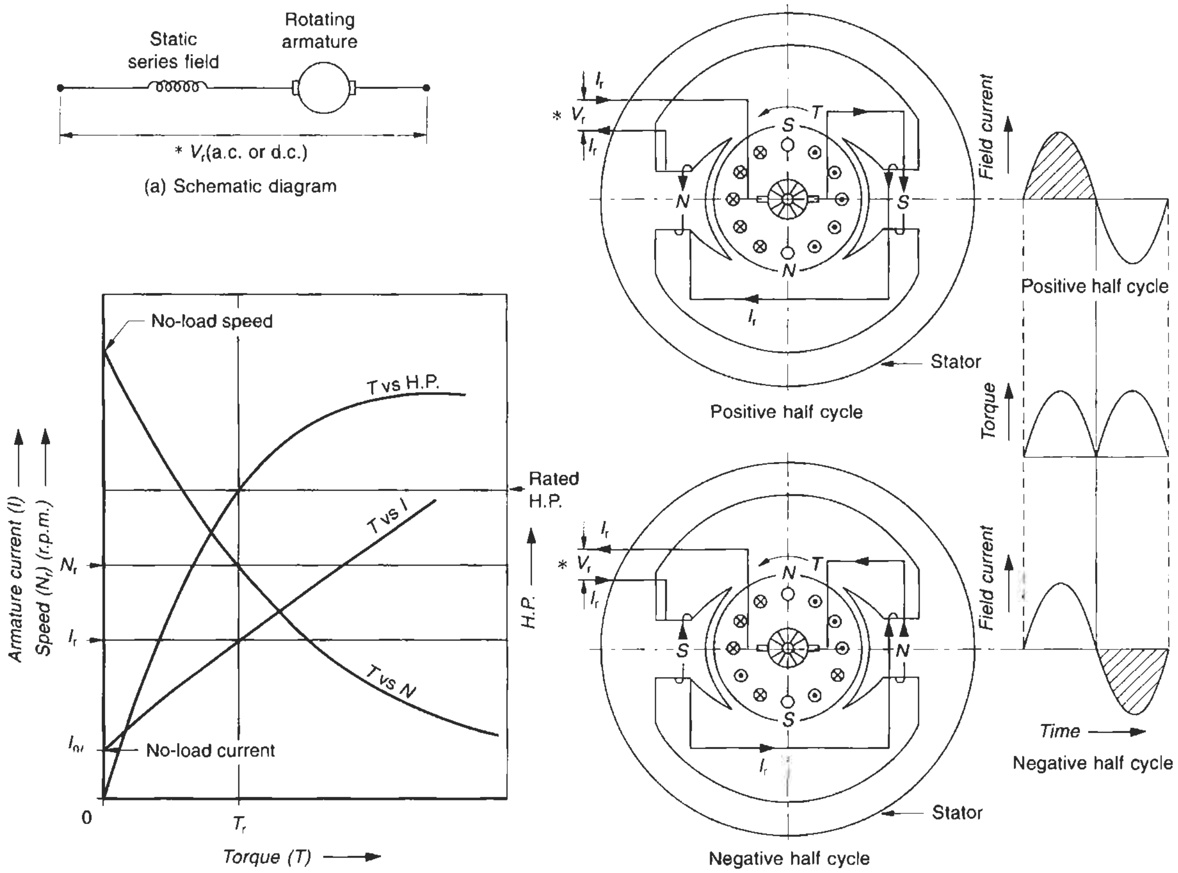

(a) Schematic diagram

T_r, I_r and N_r are the rated values

(d) Characteristics of a universal motor

* a.c. 1-ϕ or d.c.

(b) Theory of operation

(c) Pulsating torque on 1-ϕ a.c. supply

Figure 1.27 Theory of operation of a universal motor

Relevant Standards

IEC	*Title*	*IS*	*BS*	*ISO*
60034-1/1996	Rotating electrical machines Rating and performance	4722/1992 325/1996	BS EN 60034-1/1995	
60034-5/1991	Rotating electrical machines. Classification of degrees of protection provided by enclosures for rotating machinery	4691/1985	BS 4999-105/1988	
60034-6/1991	Rotating electrical machines. Methods of cooling (IC Code)	6362/1995	BS EN 60034 6/1994	
60034-7/1992	Rotating electrical machines. Classification of types of constructions and mounting arrangements	2253/1974	BS EN 60034-7/1993	
60034-12/1980	Rotating electrical machines. Starting performance of single-speed three-phase cage induction motors for voltages up to and including 660 V	8789/1996	BS EN 60034-12/1996	
60038/1994	IEC Standard voltages			
60072-1/1991	Dimensions and output series for rotating electrical machines. Frame number 56 to 400 and Flange number 55 to 1080	1231/1991	BS 5000-10/1989 BS 4999-141/1987	–
60072-2/1990	Dimensions and output series for rotating electrical machines. Frame number 355 to 1000 and flange number 1180 to 2360. Dimensions and output series for rotating electrical machines	1231/1991	BS 5000-10/1989 BS 4999-103/1987	–
60072-3/1994	Small built-in motors. Flange number BF 10 to BF 50	996/1991	BS 5000-11/1989	
60529/1989	Specification for degrees of protection provided by enclosures (IP Code)	4691/1985	BS EN 60529/1992	
60617-1 to 13	Graphical symbols for diagrams	12032	BSEN 60617-2 to 13	
–	Preferred numbers	1076/1985	BS 2045/1982	3,17,497
–	Dimensions of motors for general use	8223/1976	BS 2048-1/1989	

Related US Standards ANSI/NEMA and IEEE

NEMA/MG 1/1993	Motors and generators ratings, construction, testing and performance
NEMA/MG 2/1989	Safety Standards (enclosures) for construction and guide for selection, installation and use of rotating machines
NEMA/MG 10/1994	Energy management guide for selection and use of three-phase motors
NEMA/MG 11/1992	Energy management guide for selection and use of single phase motors
NEMA/MG 13/1990	Frame assignments for a.c. integral horsepower induction motors
ANSI C 84.1/1995	Electric power systems and equipment – voltage ratings (60 Hz)

Notes

1 In the tables of relevant Standards in this book while the latest editions of the standards are provided, it is possible that revised editions have become available. With the advances of technology and/or its application, the updating of standards is a continuous process by different standards organizations. It is therefore advisable that for more authentic references, readers should consult the relevant organizations for the latest version of a standard.

2 Some of the BS or IS standards mentioned against IEC may not be identical.

3 The year noted against each standard may also refer to the year of its last amendment and not necessarily the year of publication.

Abbreviations

ANSI	American National Standards Institute – USA
BS	British Standards – UK
IEC	International Electro Technical Commission – Switzerland
IEEE	The Institute of Electrical and Electronics Engineers – USA
IS	Indian Standards – India
ISO	International Standards Organisation – Switzerland
NEMA	National Electrical Manufacturers' Association – USA

List of formulae used

Theory of operation

$$T \propto \phi_{\mathrm{m}} \cdot I_{\mathrm{rr}} \tag{1.1}$$

$$\phi = \phi_{\mathrm{m}} \sin \omega t$$

T = torque developed
ϕ_{m} = maximum field strength
I_{rr} = rotor current

$$P = \frac{T \cdot N}{974} \tag{1.2}$$

P = rotor power in kW
T = torque in mkg
N = speed in r.p.m.

$$T \propto \frac{S \cdot {}_{\mathrm{ss}}e_2^2 \cdot R_2}{R_2^2 + S^2 \cdot {}_{\mathrm{ss}}X_2^2} \tag{1.3}$$

S = slip
R_2 = rotor resistance per phase
${}_{\mathrm{ss}}X_2$ = standstill rotor reactance per phase and
${}_{\mathrm{ss}}e_2$ = standstill rotor induced e.m.f. per phase.

$$\text{or } T_{\mathrm{st}} \propto \frac{{}_{\mathrm{ss}}e_2^2 \cdot R_2}{S \cdot {}_{\mathrm{ss}}X_2^2} \tag{1.3a}$$

T_{st} = starting torque

$$\text{or } T_{\mathrm{r}} \propto \frac{S \cdot {}_{\mathrm{ss}}e_2^2}{R_2} \tag{1.3b}$$

T_{r} = rated torque

$$e_2 \propto -z_{\mathrm{r}} \cdot \frac{\mathrm{d}\phi}{\mathrm{d}t} \tag{1.4}$$

z_{r} = number of turns in the rotor circuit per phase and
$\mathrm{d}\phi/\mathrm{d}t$ = rate of cutting of rotor flux

$$e_2 = 4.44\ Kw \cdot \phi_{\mathrm{m}} \cdot z_{\mathrm{r}} \cdot f_{\mathrm{r}} \tag{1.5}$$

Kw = winding factor
f_{r} = rotor frequency = $S \cdot f$

$$S = \frac{N_{\mathrm{s}} - N_{\mathrm{r}}}{N_{\mathrm{s}}} \cdot 100\% \tag{1.6}$$

N_{s} = synchronous speed
N_{r} = rated speed

$$N_{\mathrm{s}} = \frac{120 \cdot f}{p} \text{ r.p.m.} \tag{1.6a}$$

f = frequency of the supply system in Hz
p = number of poles in the stator winding

Rotor current

$$I_{\mathrm{rr}} = \frac{S \cdot {}_{\mathrm{ss}}e_2}{\sqrt{R_2^2 + S^2 \cdot {}_{\mathrm{ss}}X_2^2}} \tag{1.7}$$

$$\text{for } S \text{ high, } I_{\mathrm{rr}} \simeq \frac{{}_{\mathrm{ss}}e_2}{{}_{\mathrm{ss}}X_2} \tag{1.7a}$$

Motor output and torque

$$P_{\mathrm{r}} = \frac{T_{\mathrm{r}} \cdot N_{\mathrm{r}}}{974} \text{ kW} \tag{1.8}$$

P_{r} = rotor power

$$P_{\mathrm{s}} = \frac{T_{\mathrm{r}} \cdot N_{\mathrm{s}}}{974} \text{ kW} \tag{1.8a}$$

P_{s} = synchronous power

$$P_{\mathrm{s}} - P_{\mathrm{r}} = S \cdot P_{\mathrm{s}} \tag{1.9}$$

$P_{\mathrm{s}} - P_{\mathrm{r}}$ = slip loss

$$T_{\mathrm{r}} = \frac{P_{\mathrm{r}} \cdot 974}{N_{\mathrm{r}}} \text{ mkg} \tag{1.10}$$

System harmonics

$$\mathrm{HVF} = \sqrt{\Sigma \frac{V_{\mathrm{h}}^2}{n}} \tag{1.11}$$

HVF = harmonic voltage factor
V_{h} = per unit harmonic voltages
n = harmonic order not divisible by 3

(a) Eddy current loss

$$L_{\mathrm{e}} \propto t_1^2 \cdot f^2 \cdot B^2/\rho \tag{1.12}$$

t_1 = thickness of steel laminations
B = flux density
ρ = resistivity of the steel laminations

(b) Hysteresis loss

$$L_{\mathrm{h}} \propto f \cdot (B_{\mathrm{m}})^{1.5 \text{ to } 2} \tag{1.13}$$

Further reading

1 Golding, E.W., *Electrical measurements and measuring Instruments*, The English Language Book Society and Sir Isaac Pitman & Sons Ltd, London.
2 Humphries, J.T., *Motor and Controls for 1-ϕ motors*. Merrill, Columbus, OH.
3 Puchstein, A.F., Lloyd, T.C. and Conard, A.G., *Alternating Current Machines*, Asia Publishing House, Bombay (1959).
4 Say, M.G., *The Performance and Design of Alternating Current Machines*, Pitman & Sons Ltd, London (1958).
5 Smeaton, R.W., *Motor Application and Maintenance Hand Book*, McGraw Hill, New York (1969).

2

Motor Torque, Load Torque and Selection of Motors

Contents

2.1 Motor speed–torque curve

Refer to Figure 2.1 where

T_{st} = starting torque or breakaway torque.

T_m = minimum, pull-in or pull-up torque.

T_{po} = pull-out, breakdown or maximum torque, obtainable over the entire speed range. In a good design this should occur as close to the rated slip as possible to ensure that the motor runs safely, even during momentary overloads, load fluctuations exceeding the load torque, or abrupt voltage fluctuations, without harmful slip losses (equation (1.9)). In some specially designed rotors, however, to achieve a high starting torque sometimes the pull-out torque T_{po} may not be available on the speed–torque curve. It is possible that in such cases the T_{st} may be the highest torque developed by the motor in the entire speed range (Figure 2.2).

T_r = rated or the full-load torque and should occur as near to the synchronous speed as possible to reduce slip losses.

S = rated slip at which occur the rated torque and current.

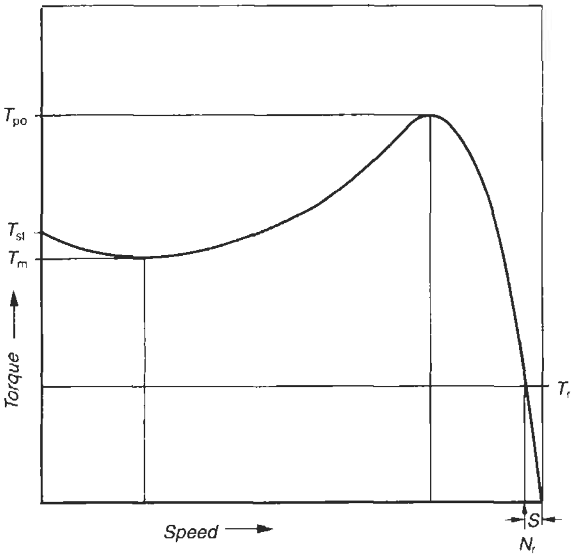

T_{st} : Starting torque
T_m : Pull-in or pull up torque
T_{po} : Pull-out or breakdown torque (maximum torque)
T_r : Rated torque

Figure 2.1 Defining a motor torque

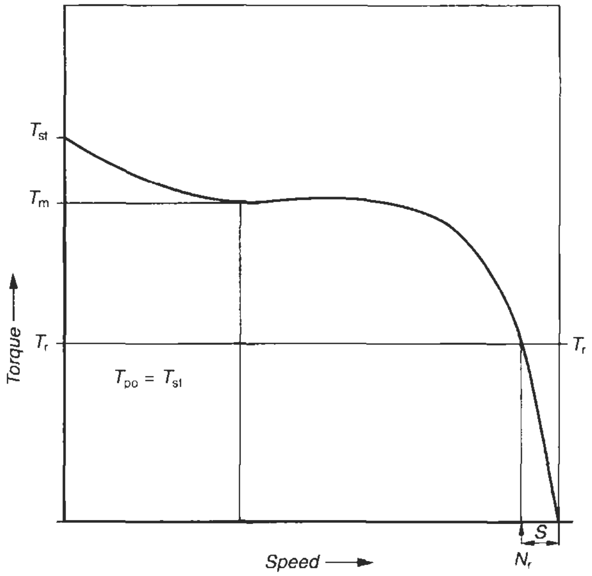

Figure 2.2 T_{st} too high to have T_{po} on the speed–torque curve

2.2 NEMA rotor designs

As a further step towards standardization and to achieve more harmony in motor sizes and designs, for better interchangeability in the motors produced by different manufacturers, in the same country or by other countries, NEMA,* in its publication *MG-1 for Induction Motors*, has prescribed four rotor designs, A, B, C, and D, covering almost all sizes of LT motors, to possess a prescribed minimum T_{st}, T_{po} and pull-up torques. These torques are generally as drawn in Figure 2.3 to meet all normal industrial, agricultural or domestic needs. (Refer to the said publication or IEC 60034-12 for values of these torques. IEC 60034-12 has also provided similar stipulations.)

However, motor manufacturers may adopt more flexible designs with more reserve capacity and better speed–torque characteristics to suit the requirements of a particular sector. These are particularly for installations where the distribution system may have wider voltage fluctuations or the load itself may have varying load demands. It is possible that the same motor may have to drive more than one type of loads at different times. An agricultural pump motor may be one such application where it may also have to drive a thrasher or a winnower at different times. A motor with higher flexibility would be more desirable for such applications.

Manufacturers, depending upon market needs, may adopt all or a few such designs or even have their own designs, still conforming to such stipulations. Special applications may, however, call for a custom-built motor as noted later. As a standard practice all HT motors are custom-built for each application and no rotor designs are prescribed for these.

---

*NEMA – National Electrical Manufacturers Association, USA.

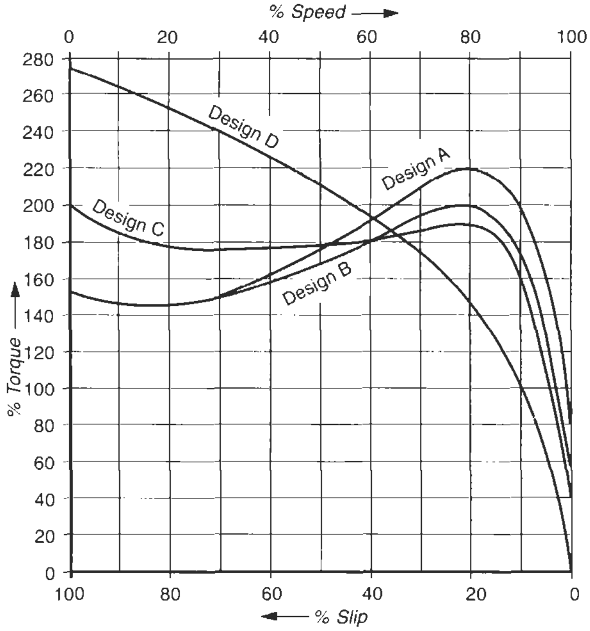

Figure 2.3 Speed–torque characteristics of motors as per NEMA standard

2.3 Special designs of rotors

2.3.1 Double squirrel cage motors

If the torque requirement of a load is high, an ordinary squirrel cage motor, even on a DOL* switching, may not be suitable to meet the stringent starting requirements. If, however, the resistance of the rotor circuit is increased the starting torque can be improved as discussed in Section 1.2 (equation (1.3)). But high rotor resistance will mean high running slip, causing greater rotor losses and heat in the rotor circuit. The solution to this problem is found in a double squirrel cage motor. In such motors the rotor has two cages, one closer to the periphery of the rotor and the other deeper and nearer to the core.

The one closer to the periphery has a high resistance and the one nearer to the core a low one. To accomplish a high rotor resistance, high-resistivity materials such as brass is generally used. The inner cage has a high leakage reactance due to its depth, while the outer one has a high resistance and a low reactance like an ordinary squirrel cage rotor.

During start-up the inner cage has a very high impedance and thus, the larger portion of the current passes through the outer cage only. Because of high resistance and high I^2R loss in the rotor circuit, it develops a high starting torque and accomplishes an analogue to a slip-ring motor. When the rotor reaches the rated speed, the reactances of both the cages are almost negligible because of low slip and the rotor current is carried into two parallel paths made of these two cages, having a low effective resistance, being in parallel. In such designs, therefore, the speed–torque curve can be achieved to take any desired shape by suitably choosing the resistances of the two cages, the width of the slot opening and the depth of the inner cage. The equivalent circuit diagram of a motor with a single and a double cage rotor is illustrated in Figure 2.4 (a) and (b) respectively. To draw the speed–torque curve for such a motor theoretically, consider the two cages developing two different torques separately. The effective torque will be the summation of these two, as shown in Figure 2.5.

Notes

1 The inner and outer cages are separated by a narrow slit to facilitate linking of the main flux with the inner bars which are quite deep.

2 HT motors are also manufactured with double cage rotors. They are designed especially to match a particular load requirement when the load characteristics are known, or as in NEMA class C, or as the manufacturer's own practice, when the starting torque requirement exceeds 150% of the full-load torque (FLT). The likely applications for a high starting torque may be induced-draught fans, blowers, coal crushers, mill motors and coal conveyor motors.

3 Generally, depending upon the type of load, different manufacturers may adopt to different design practices, such as high T_{st} and low thermal withstand time or moderate T_{st} and high thermal withstand time.

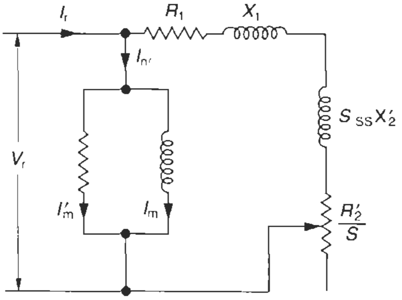

Figure 2.4(a) Equivalent circuit diagram of a single squirrel cage motor

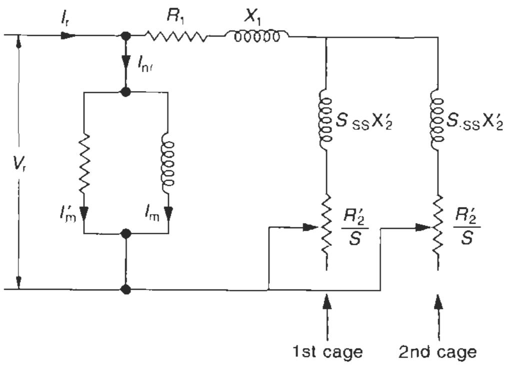

Figure 2.4(b) Equivalent circuit diagram of a double squirrel cage motor

---

*DOL – Direct On-line.

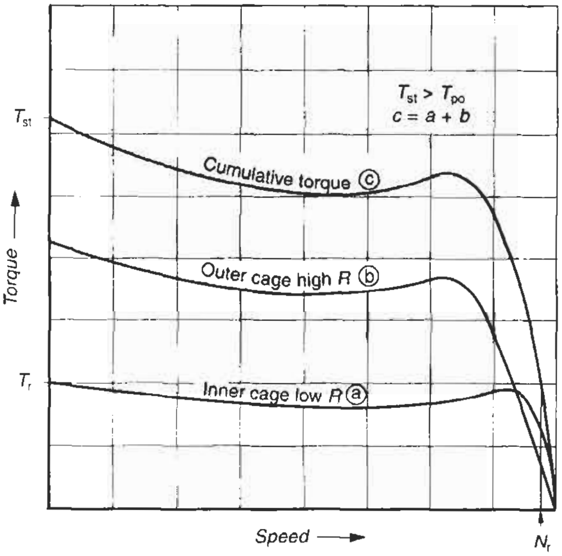

Figure 2.5 Speed–torque characteristics of a double squirrel cage motor

Performance

In such motors the pull-out torque is normally less than the starting torque. This is because the pull-out torques by the two cages occur at different speeds. Such motors would possess a low power factor and efficiency compared to an ordinary squirrel cage motor, because of the high leakage reactance of inner cage and comparatively higher I^2R losses. Such motors would have a slightly higher slip than an ordinary squirrel cage motor due to higher rotor resistance.

Limitations

During start-up since only the outer cage is in the circuit with a very high current, the motor is heated up quickly by every start and may not be suitable for frequent starts and reversals.

There are several other designs available to achieve a considerably high staring torque and yet overcome the above limitation. It is possible by employing a deep cage, tapered cage or special types of rotor materials such as brass and selenium to increase the starting resistance of the rotor circuit, and hence the starting torque. These methods are discussed briefly below.

2.3.2 Other designs of rotor cage

Use of skin effect

The basic concept used in the design and selection of other types of rotors to provide better starting characteristics is the high rotor resistance during start-up. Other than the double cage rotors, this can also be achieved by making deep or taper rotor bars as shown in Figure 2.6 (See also Figure 2.7). At different frequencies, the rotor has different effective resistances, due to a change in inductive reactance ($S.ssX_2$), which in an induction motor varies with rotor frequency (i.e. speed). This effect of change of resistance is termed the 'skin effect'. For more details, see Section 28.7. To make use of this effect, the slot, irrespective of its configuration, may be made deep to create higher eddy currents and correspondingly higher eddy current losses, to add to the effective resistance of the rotor during start-up and to diminish this with speed. (See also Section 2.4.) In this way the depth, in deep bars, and depth and taper, in tapered bars, can be varied to achieve the desired performance. For the same torque characteristics either of these types of cages can be employed which, for one characteristic, will require the same area of cross-section but the depth will vary depending upon the type. The deep bars will be deeper than a taper bar. Moreover, the taper slot will have a better grip for rotor conductors during a run than a deep parallel bar and also better cooling properties.

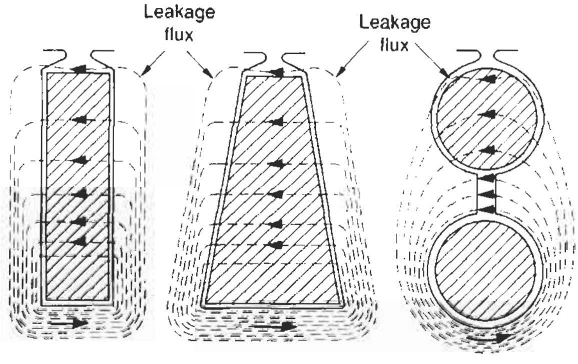

(a) Deep bar (b) Taper bar (c) Double cage

Figure 2.6 Different types of rotor slots, making use of skin effect

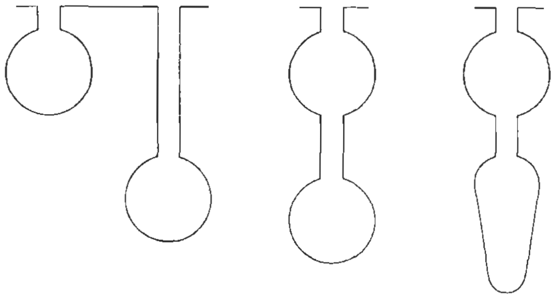

Figure 2.7 Other designs of a few double cage slots

Angle of skew in squirrel cage rotors

The movement of rotor teeth around the stator produces a clogging effect, resulting into vibrations and noise. To reduce this effect, the common practice is not to provide the rotor slots parallel to the shaft axis but at an angle. This practice is known as 'rotor bar skew'. A proper skewing can also improve the starting torque and reduce the starting current, in addition to the effects of space harmonics and slot losses. The angle of twist (skew) is a matter of experience, by results obtained over the years. The most common skew angles, for various combinations of stator and rotor slots in practice, are given in Table 2.1.

Table 2.1 Typical angles of skew for cage rotors

Number of poles	*Number of stator slots*	*Number of rotor slots*	*Skew angle (degrees)*
2	18	14	26
	24	16	20
	36	28	16
4	24	18	20
	36	28	13 to 14
6	36	33	11 to 14

2.4 Effect of starting current on torque

Ignoring the friction and core losses, the torque developed in synchronous watts,

$$T_r = 3 \cdot I_{rr}^2 \cdot R_2 \cdot \frac{1-S}{S}$$

or

$$\simeq 3 \cdot \frac{I_{rr}^2 \cdot R_2}{S}$$

i.e.

$$T_r \propto \frac{I_{rr}^2 \cdot R_2}{S} \tag{2.1}$$

Since the stator current is a function of the rotor current, the motor torque is proportional to the square of the stator current. Generalizing,

$$\frac{T_{st}}{T_r} = \left(\frac{I_{st}}{I_r}\right)^2 \cdot \text{S (slip at start = 1)} \tag{2.2}$$

$$\frac{T_{st1}}{T_{st2}} = \left(\frac{I_{st1}}{I_{st2}}\right)^2 \text{ (for the same rotor resistance } R_2\text{)} \tag{2.3}$$

or

$$\frac{T_{st1}}{T_{st2}} = \left(\frac{I_{st1}}{I_{st2}}\right)^2 \cdot \frac{R_2}{R_2'} \text{ (for different rotor resistances)} \tag{2.4}$$

Analysing equation (2.2), the higher the starting torque, the higher will be the starting current for the same motor parameters (Figure 2.8). An attempt to keep the starting current low and yet achieve a higher starting torque may be feasible, but only up to a certain extent, by suitably redesigning the rotor with a higher resistance (equation (2.1)). However, the results of such an attempt may adversely affect the other performance of the motor. For example, the T_{po} will be reduced due to a higher rotor resistance and may occur at a higher slip, even if the full-load slip is the same. The increased slot leakage, due to the skin effect, will also diminish the full-load power factor. (See the circle diagram, Figure 1.16, corroborating this statement.) The T_{st} and I_{st} are, therefore, a matter of compromise to achieve a good T_{po}, a better power factor and a lower slip. Figure 2.9 shows for different starting torques the corresponding pull-out torques and their occurrence of slip, maintaining the same full-load slip.

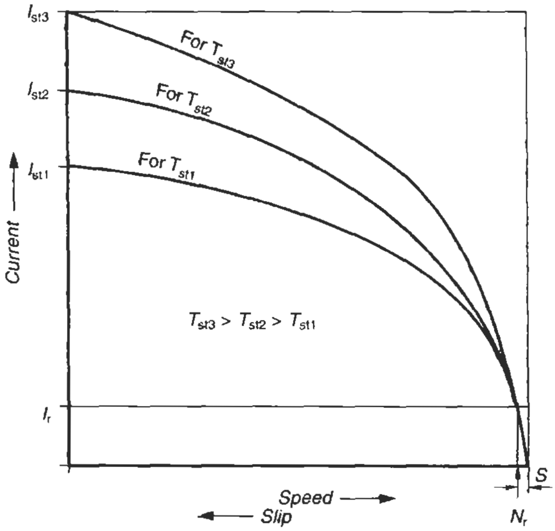

Figure 2.8 Starting (locked rotor) currents corresponding to different starting torques

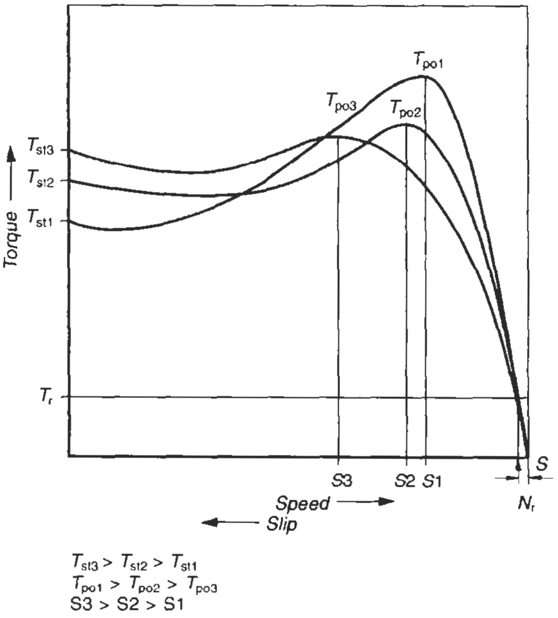

Figure 2.9 Effect of starting torque on T_{po} and slip

2.4.1 NEMA recommendations on starting currents

With a view to achieve yet more standardization in motor design, NEMA Standard MG-1 has also recommended the maximum locked rotor current of single-speed three-phase motors for the various rotor designs A, B, C, and D, for various recommended torque values. These have been derived for a 415 V a.c. system and are shown in Table 2.2.

Table 2.2 Recommended maximum locked rotor currents for various rotor designs

HP	*Approx. maximum locked rotor current*	*Rotor design*
1	18	B.D.
1.5	25	B.D.
2	31	B.D.
3	39	B.C.D.
5	56	B.C.D.
7.5	77	B.C.D.
10	98	B.C.D.
15	141	B.C.D.
20	178	B.C.D.
25	222	B.C.D.
30	265	B.C.D.
40	354	B.C.D.
50	441	B.C.D.
60	529	B.C.D.
75	661	B.C.D.
100	884	B.C.D.
125	1105	B.C.D.
150	1319	B.C.D.
200	1764	B.C.

Note For motors beyond 200 h.p., NEMA has not covered these data. It is, however, recommended that larger motors may be designed to have even lower locked rotor currents than the above to reduce the starting transient effects on the distribution system as well as on the motor windings.

2.5 Load torque or opposing torque

For smaller loads, say up to 20/30 kW, it may not be essential to pre-check the load curve with that of the motor. But one should ensure that working conditions or the load demand are not so stringent that they may cause a lock-up of rotor during pick-up due to a very low applied voltage or accelerating torque, or a prolonged starting time as a consequence or due to a very large inertia of rotating masses etc. For critical applications and for larger motors it is essential to check the speed–torque requirement of the load with that of the motor. Loads can generally be classified into four groups. Table 2.3 indicates the more common of these and their normal torque requirements, during start-and variation with speed. The corresponding curves are also drawn in Figures 2.10–2.13. To ascertain the output requirement of a motor, for different applications a few useful formulae are given in Appendix 1 at the end of Part I of this book.

2.6 Selection of motors

The recommended practice would require that at each point on the motor speed–torque curve there should be a minimum 15–20% surplus torque available, over and above the load torque, for a safe start (Figure 2.14). The torque thus available is known as the accelerating torque.

2.7 Time of start-up and its effect on motor performance

This depends upon the applied voltage, i.e. type of switching, starting torque of the motor, counter-torque

Table 2.3 Types of loads and their characteristics

Serial no.	*Load*	*Characteristics of load*	*Starting torque*	*Opposing torque with speed*	*Figure no.*
1	Presses, punches, latches and drilling machines	–	Light duty 20–30%	Torque remains constant and at a very low value, since the load is applied when the motor has run to speed	2.10
2	Fans, blowers, centrifugal pumps and compressors	The power is proportional to the third power of the speed ($P \propto N^3$)	Medium duty 10–40%	Torque rises with square of the speed ($T \propto N^2$)	2.11
3	Rolling mills, ball mills, hammer mills, calendar drives and sugar centrifuges	The power is proportional to the square of the speed ($P \propto N^2$)	Heavy duty 30–40%. May be more and have to accelerate large masses of heavy moment of inertia, requiring a prolonged time of start-up	Near full-load torque	2.12
4	Conveyors and hoists	The power is proportional to the speed ($P \propto N$)	Heavy duty 100–110%	Torque remains constant throughout the speed range and at almost the full-load torque	2.13

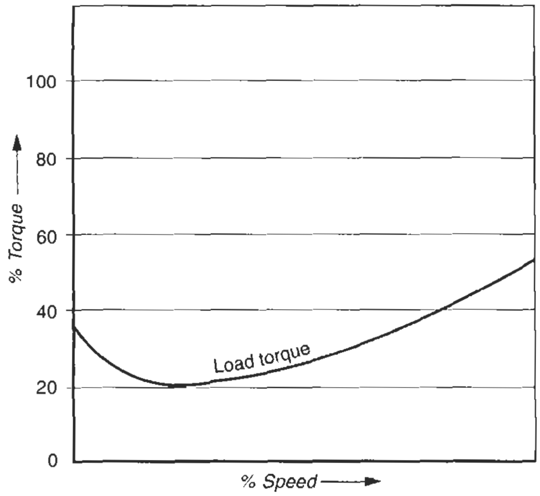

Figure 2.10 Light duty

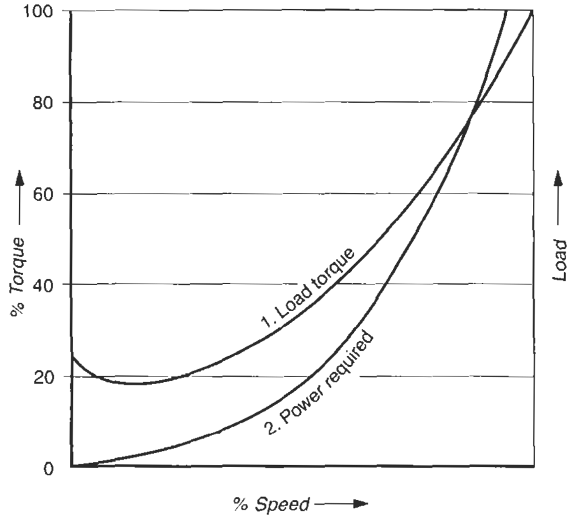

1. Torque ∝ (speed)^2
2. Power ∝ (speed)^3

Figure 2.11 Medium duty

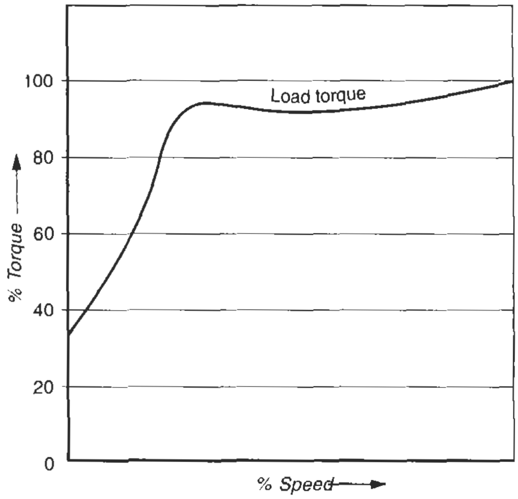

Figure 2.12 Heavy-duty start

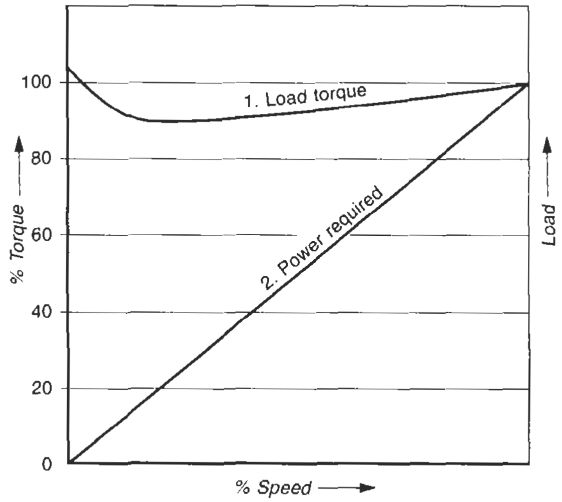

1. Torque constant
2. Power ∝ speed

Figure 2.13 Heavy duty

of the load and the inertia of the rotating masses etc. It is expressed by

$$t_s = \frac{GD_T^2 \cdot N_r}{375 \cdot T_a} \tag{2.5}$$

where

t_s = time of start-up in seconds

GD_T^2 = total weight moment of inertia of all the rotating masses, referred to the motor speed in kg.m^2

= $GD_M^2 + GD_L^2$

(GD_M^2 is motor and GD_L^2 is load weight moment of inertia referred to the motor speed)

where

$GD^2 = 4 \cdot g \cdot M \cdot K^2$

$g = 9.81$ m/s^2

M = mass and

$g \cdot M$ = W (weight in kg)

K = radius of gyration

T_a = average accelerating torque in mkg (Figure 2.14), i.e. average ($T_{st} - T_L$) in mkg

T_L = opposing torque (load torque)

GD_L^2 *at motor speed*

If the load is driven through belts or gears at a speed different from that of the motor, the effective value of

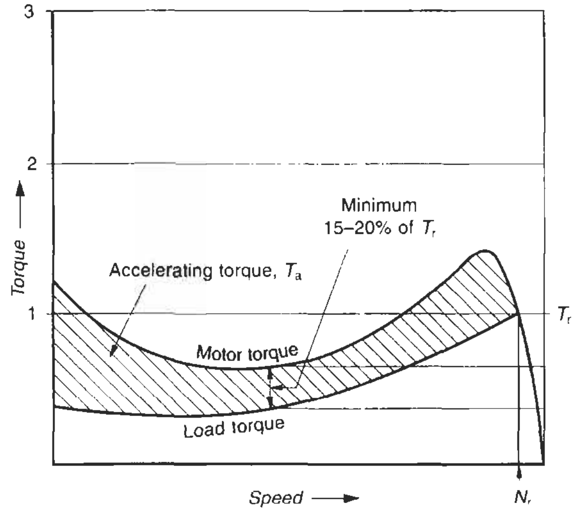

Figure 2.14 Accelerating torque (T_a)

GD^2 of the load, as referred to the motor speed, will be different. Equating the work done at the two speeds:

$$GD_L^2 \cdot N_r^2 = GD_l^2 \cdot N_L^2$$

$$\text{or } GD_L^2 = GD_l^2 \cdot \left(\frac{N_L}{N_r}\right)^2 \tag{2.6}$$

where

GD_l^2 = weight moment of inertia of load at a speed N_L.

Example 2.1

A 100 kW, 750 r.p.m. motor drives a coal mill, having GD_l^2 as 600 kg.m^2 through belts, at a speed of 500 r.p.m. Then its effective GD_L^2 at motor speed will be

$$GD_L^2 = 600 \times \left(\frac{500}{750}\right)^2$$

$$= 600 \times 0.445$$

$$\simeq 267 \text{ Kg m}^2$$

Note For simplicity, the synchronous speed of the motor is considered, which will make only a marginal difference in calculations.

2.7.1 Motor heating during start-up

Irrespective of the type of switching adopted or the load driven by the motor, each time it is switched it generates heat, in both the rotor and the stator components. The magnitude of the start-up heat will depend upon the inertia of the rotating masses, the type of switching, the torque developed by the motor and the opposing (load) torque etc., as can be inferred from equation (2.5). The higher the time of start-up, the higher will be the heat generated. The corresponding temperature rise of the stator or the rotor windings can be measured as below:

Heat generated;

$$H = I_{st}^2 \cdot R \cdot t_s \quad \text{watt} \cdot \text{s. (W·s.)} \tag{2.7}$$

$$\text{also} \quad H = W \cdot \delta \cdot \theta \tag{2.8}$$

$$\text{or} \quad \theta = \frac{H}{W \cdot \delta} \ ^\circ\text{C}$$

where

W = weight of heated portion in kg

δ = specific heat of the material of windings, in watt · s./kgm (°C)

θ = temperature rise in °C (Table 11.1)

A possible way to restrict the temperature rise is the use of a material having a high specific heat. An increase in the weight would be futile, as it would require more material and prove to be a costly proposition. A motor's constructional features should be such as to provide good heat dissipation through its body.

Sharing of heat

The rotor and stator heats, during start-up and run, are interrelated and vary in the same proportion as their respective resistances. (See circle diagram Figure 1.16 in Section 1.10.)

If H_r = the heat of rotor in W·s.

and H_s = the heat of stator in W·s.

$$\text{Then } \frac{H_s}{H_r} = \frac{R_1}{R_2'} \tag{2.9}$$

While the total heat generated in the stator and the rotor may be comparable, there may be a significant difference in the temperature rise of the respective parts as a result of the bulk of their active parts and area of heat dissipation. For the same material, the rotor will have a much higher temperature rise compared to the stator, in view of its weight, which may be several times less than the stator. During start-up, therefore, the rotor will become heated quickly and much more than the stator. Repeated start-ups may even be disastrous. During a run, however, when the temperature has stabilized, an overload will render the stator more vulnerable to damage than the rotor. The rotors, as standard practice, are designed for much higher temperature rises (200–300°C) and may be suitable to withstand such marginal overloads.

Corollary

During start-up the rotor, due to its lighter weight compared to the stator, and during a run, the stator, due to overload are more vulnerable to damage through excessive heat.

Example 2.2

A rotor fails during start-up, possibly due to a lower supply voltage than desired or a smaller accelerating torque than required or reasons leading to similar conditions. In such cases the rotor fails first, due to higher rotor currents and a prolonged acceleration time or a locked rotor. At this instant, unless the motor control gear trips, the stator may also fail due to excessive heat. Instances can be cited where even the short-circuit end rings of a squirrel cage rotor melted, and the molten metal, through its centrifugal force, had hit the stator overhangs, damaging them through its insulation, causing an inter-turn fault.

2.7.2 Heating during a no-load start-up

During a no-load start-up, i.e. when the motor shaft is free, half the energy drawn from the supply appears as heat in the rotor and the stator windings. In slip-ring motors the bulk of the rotor heat is shared by the external resistance, a feature which makes it a better choice for frequent starts and stops, and for driving loads that possess large inertia. It has been seen that most of the stringent load requirements can also be met with high torque squirrel cage motors, manufactured with a judicious design of stator and rotor resistances, an efficient means of heat dissipation and a proper choice of active material. The heat generated during a no-load start-up can be expressed by;

$$H_n l = \frac{GD_M^2 \cdot N_r^2}{730} \text{ W·s} \tag{2.10}$$

This expression, except for the mechanical design, is totally independent of the type of start and the electrical design of the motor. Electrically also, this is demonstrated in the subsequent example. The expression, however, does not hold good for an ON-LOAD start. On load, the accelerating torque diminishes substantially with the type of load and the method of start, as can be seen from Figure 2.14, and so diminishes the denominator of equation (2.5), raising the time of start.

Example 2.3

A squirrel cage motor is started through an auto-transformer starter with a tapping of 40%. Compare the starting heat with a DOL starting when the motor shaft is free.

With DOL T_a = 100%

With an auto-transformer $T_a = (0.4)^2$ or 16%

$\therefore$ Starting time with DOL, $t_s = \frac{GD_M^2}{375} \times \frac{N_r}{T_a}$

and with auto-transformer, $t_{s1} = \frac{GD_M^2}{375} \times \frac{N_r}{0.16 T_a}$

i.e. 6.25 times of DOL

Since the heat during start-up $\propto (I_{st})^2 \cdot t$

$\therefore$ Heat during start on a DOL $\propto (I_{st})^2 \cdot t_s$

and on an auto-transformer $\propto (0.4 I_{st})^2 \cdot t_{s1}$

or $\propto 0.16 (I_{st})^2 \times 6.25 t_s$

i.e. $\propto (I_{st})^2 \cdot t_s$

Thus at no load, irrespective of the motor torque and the type of switching, the starting heat would remain the same.

2.7.3 Heating during an on-load start-up

Against an opposing torque, the accelerating torque of the motor, which hitherto had varied in proportion to the type of switching, will now diminish disproportionately with a switching other than DOL (Figure 2.15). The starting time rises disproportionately and so does the starting heat. Care should therefore be taken when selecting a motor for a particular type of switching and magnitude of the opposing torque. This is to avert possible damage to the motor due to prolonged starting time, as a consequence of an inadequate accelerating torque.

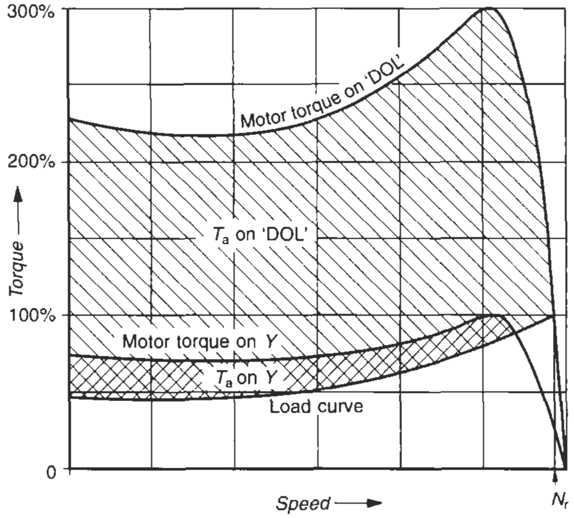

Figure 2.15 Variation in T_a with Y/Δ switching

Maintaining a minimum accelerating torque at each point, during the pick-up may also not be adequate sometimes, when the starting time exceeds the locked rotor or thermal withstand time of the motor, as discussed below.

2.8 Thermal withstand time

This is also known as safe stall time or the locked rotor withstand capacity of the motor. This is the time during which the motor can safely withstand electromagnetic effects and consequent heating in a locked condition. These are drawn for the cold and hot conditions of the motor in Figure 2.16. Evidently, the motor must come to speed within this time, irrespective of type of load or method of switching. In a reduced voltage start-up or slip-ring motors the starting current would be low and these curves would signify that for any reason if the rotor becomes locked during start or run, or takes a prolonged time to come up to speed, the protective device must operate within the safe stall time. Generally, these curves are drawn for the stator to monitor the actual running condition and not the condition during start-up. The rotor can withstand much higher temperatures during a run. With the help of these curves, knowing the starting time and the starting current of the motor, one can ascertain the number of starts and stops the motor would be capable of undertaking. These curves also help in the selection of the protective relays and their setting as discussed in Chapter 12.

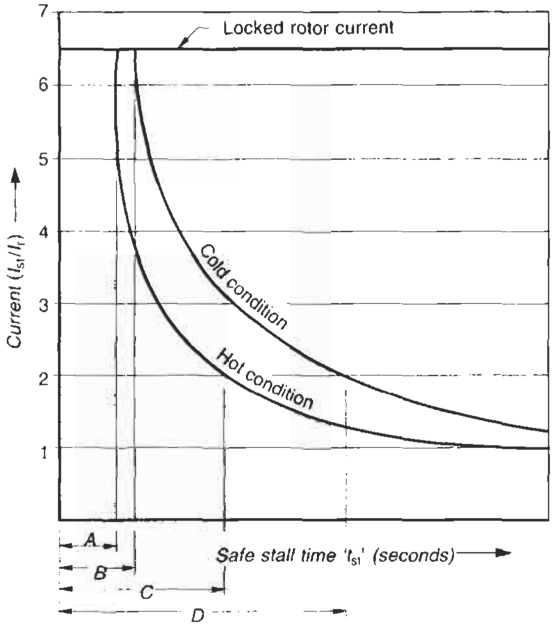

A – Maximum withstand time under hot condition (on DOL)
B – Maximum withstand time under cold condition (on DOL)
C – Maximum withstand time under hot condition during *Y*
D – Maximum withstand time under cold condition during *Y*

Figure 2.16 Thermal withstand curves

2.8.1 Heating phenomenon in a motor during a stalled condition

(a) For the stator

Stalling is a condition in which the rotor becomes locked due to excessive load torque or opposing torque. Stalling is thus a replica of a locked rotor condition and can occur at any speed below the T_{po} region, as illustrated in Figure 2.17. The figure also shows that the stator current during stalling will generally correspond to I_{st} only, due to the characteristic of the motor speed–current curve. Whenever the rotor becomes locked in a region that almost corresponds to the I_{st} region of the motor (Figure 2.17) it will mean a stalling condition.

In such a condition, if the heat generated in the windings raises the temperature of the windings by θ above the temperature, the motor was operating just before stalling. Then by a differential form of the heat equation:

$$H_{st\ell} \cdot t_{st\ell} = \theta \cdot C \tag{2.11}$$

where

$H_{st\ell}$ = heat generated during stalled condition per second in watts
= power loss
= $I_{st\ell}^2 \cdot R_1$
$I_{st\ell}$ = current at the point of stalling in Amps
R_ℓ = resistance of the stator windings per phase in Ω
$t_{st\ell}$ = time for which the stalling condition exists in seconds

C = heat capacity of the motor
= heat required to raise the temperature of the windings by 1 °C in Joules
= $W \cdot \delta$

where

W = weight of the stator windings in kg
= volume of stator windings × specific gravity of the metal of the windings
= $L_{mt} \cdot Z_s \cdot A_{cu} \cdot d$
L_{mt} = length of a mean turn of the winding in metres
Z_s = number of stator turns per phase
A_{cu} = area of the whole windings in cm^2
d = specific gravity of the winding material in gm/cm^3
δ = specific heat of winding metal in watt · s/kg · m °C

Note 1 In equation (2.11) it is presumed that the heating of the windings is adiabatic i.e. whatever heat is generated during a stalled condition is totally consumed in raising the temperature of the stator windings by θ. An adiabatic process means that there is no heat transfer from the system to the surroundings. This is also known as the heat sink process. The presumption is logical, hecause the duration of heating is too short to be able to dissipate a part of it to other parts of the machine or the surroundings.

$$\therefore t_{st\ell} = \frac{\theta \cdot C}{H_{st\ell}} = \frac{\theta \cdot W \cdot \delta}{I_{st\ell}^2 \cdot R_1}$$

$$= \frac{\theta \cdot (L_{mt} \cdot Z_s \cdot A_{cu} \cdot d) \cdot \delta}{I_{st\ell}^2 \cdot R_1}$$

where $R_\ell = \dfrac{\rho \cdot L_{mt} \cdot Z_s}{A_{cu}}$

and $\rho = \rho_{40}(1 + \propto h)$
where, $\propto$ = temperature coefficient of resistivity
$= \dfrac{1}{234.5}$ °C
ρ_{40} = resistivity of copper at 40°C
h is known as the middle temperature during the entire temperature variation in the locked rotor condition.

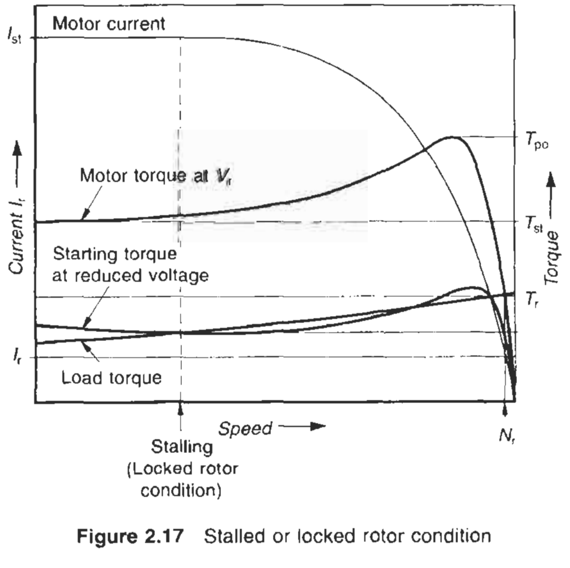

Figure 2.17 Stalled or locked rotor condition

$$\therefore t_{st\ell} = \frac{\theta \cdot L_{mt} \cdot Z_s \cdot A_{cu} \cdot d \cdot \delta}{I_{st\ell}^2 \cdot \rho_{40}(1 + \propto h) \cdot \dfrac{L_{mt} \cdot Z_s}{A_{cu}}}$$

$$= \left(\frac{A_{cu}}{I_{st\ell}}\right)^2 \cdot \theta \cdot \frac{d \cdot \delta}{\rho_{40}(1 + \propto h)}$$

and $\frac{I_{st\ell}}{A_{cu}} = J_{ss} \simeq$ current density during start in A/cm^2 and

$$\frac{\rho_{40}(1 + \propto h)}{d \cdot \delta} = k$$

where

k = material constant for the metal;

- (i) for aluminium = 0.016
- (ii) for copper = 0.0065
- (iii) for brass = 0.0276

$$\therefore \ t_{st\ell} = \frac{1}{J_{ss}^2} \cdot \theta \cdot \frac{1}{0.0065} \text{ (for copper windings)}$$

Note 2 Since no system can be heat adiabatic in practice there is a certain amount of heat dissipation from the impregnated windings to the stator core and housing. This heat dissipation is considered as 15% of the total heat generated as in IEC 60079-7.

$\therefore$ actual H_s = 85% of what has been calculated above

and $$t_{st\ell} = \frac{\theta}{J_{ss}^2 \times 0.0065 \times 0.85}$$

or $$t_{st\ell} = \frac{\theta}{J_{ss}^2 \times 0.00552} \text{ seconds (s)} \qquad (2.12)$$

Application

For safe stall conditions $t_{st\ell}$ should be less than the thermal withstand time of the motor under locked or short-circuit condition.

(i) θ is called the permissible rise in temperature in the stalled condition.

(ii) For class *B* insulation, the maximum limiting temperature is 185°C and for class *F* 210°C (short-time permissible temperature). The permissible rise in temperature in class *B* is 80°C above an ambient of 40°C.

$$\therefore \quad \theta = 185 - (40 + 80)$$

$$= 65°\text{C for hot conditions}$$

$$\text{and } \theta = 185 - 40$$

$$= 145°\text{C for cold conditions}$$

(b) For the rotor

To ascertain whether the stator or the rotor would fail first during a stalled condition, the thermal withstand time of the rotor should also be determined separately for the rotor bars and the end rings. The lowest values for the stator or the rotor will be the safe stall time for the entire motor. The limiting temperatures in rotor components may be considered as follows:

Limiting temperature for bars	450°C
Limiting temperature for rings	100°C
Operating temperature for bars	150°C
Operating temperature for rings	70°C

Therefore the permissible rise in temperature in a stalled condition will be as follows:

θ for bars in cold conditions = 450 – 40 = 410°C
θ for bars in hot conditions = 450 – 150 = 300°C
θ for rings in cold conditions = 100 – 40 = 60°C
θ for rings in hot conditions = 100 – 70 = 30°C

2.8.2 Plotting thermal withstand characteristics of the motor

Calculate the thermal withstand times $t_{st\ell}$'s under cold and hot conditions and also at different I_{st}, say 200%, 300% and 400% etc. of I_r as shown below. After determining the corresponding safe thermal withstand times, according to the above formula, draw the graph (Figure 2.16), I_{st} vs t_{st}:

Stalled current $I_{st\ell}$, as % of I_r	*Thermal withstand time, $t_{st\ell}$ in seconds*
200	t_5
300	t_4
400	t_3
500	t_2
600	t_1

and for J_{ss} (for Δ windings) $= \frac{I_{st\ell}}{\sqrt{3} \cdot (\text{Area of windings/turn}) \cdot Z_s}$

Note J_{ss} is a design parameter and more details may be obtained from the motor manufacturer.

Example 2.4

A 250 kW motor has a cold thermal withstand time of 30 seconds and a hot thermal withstand time of 25 seconds. If the starting time is 7 seconds, determine the consecutive cold or hot starts that the motor will be able to sustain safely.

Number of consecutive cold starts $= \frac{30}{7} = 4.3$

i.e. 4 starts

and number of hot starts $= \frac{25}{7} = 3.6$

i.e. 3 starts

The period after which this can be repeated will depend upon the heating curve and the thermal time constant of the motor, i.e. the time the motor will take to reach thermal equilibrium after repeated starts (See Chapter 3).

Example 2.5

A centrifugal compressor driven through V-belts at a speed of 4500 r.p.m. having the torque curve as shown in Figure 2.18 and a moment of inertia MK^2 of 2.50 kgm^2 employs a squirrel cage motor with the following parameters:

kW = 350

N_r = 1485 r.p.m.

speed–torque characteristic as in Figure 2.18

GD_M^2 = 30 kgm^2

Safe stall time $\left\{ \begin{array}{l} \text{hot} - 30 \text{ s.} \\ \text{cold} - 40 \text{ s.} \end{array} \right.$

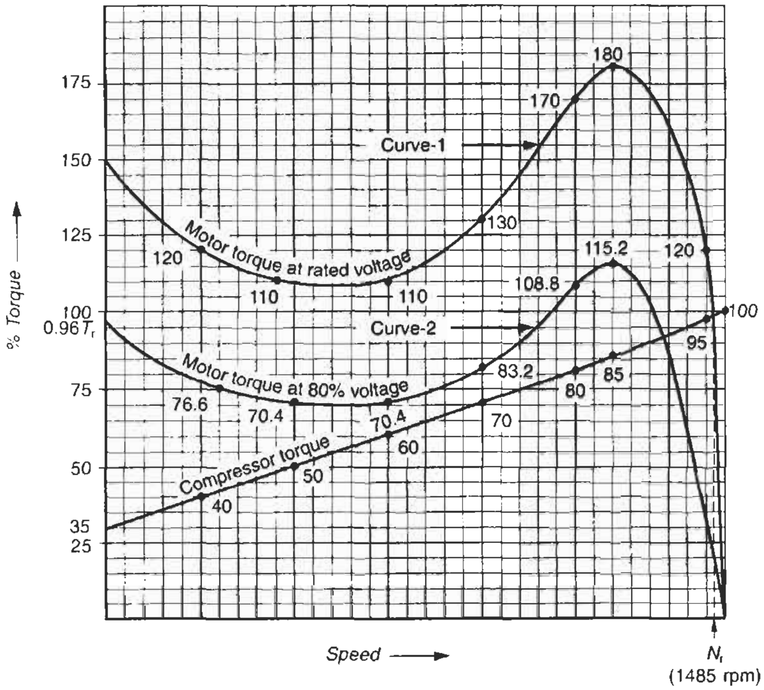

Figure 2.18 Determining the accelerating torque

Calculate the starting time and consecutive cold and hot starts for which the motor will be suitable with a DOL starting.

Solution
To determine the exact accelerating torque, measure the ordinates of torque as shown at different speeds and calculate the average torque as follows:

(a) Average load torque

$$T_L = \frac{35 + 40 + 50 + 60 + 70 + 80 + 85 + 95 + 100}{9}$$

$$= \frac{615}{9}$$

$$= 68.33\%$$

(b) Average motor torque

$$T = \frac{150 + 120 + 110 + 110 + 130 + 170 + 180 + 120 + 100}{9}$$

$$= \frac{1190}{9}$$

$$\simeq 132.2\%$$

(c) ∴ Average accelerating torque

$$T_a = 132.2 - 68.33$$

$$= 63.87\%$$

(d) Motor rated torque

$$T_r = \frac{350 \times 974}{1485}$$

$$\simeq 230 \text{ mkg}$$

$$\therefore T_a = 230 \times 0.6387$$

$$= 146.9 \text{ mkg}$$

(e) Total GD_T^2 at motor speed $= 30 + (4 \times 9.81 \times 2.5)\left(\frac{4500}{1485}\right)^2$

where $[GD_L^2 = 4 \cdot g \cdot MK^2]$ (at the compressor speed)

i.e. $GD_T^2 = 30 + 901$

$= 931$ Kgm^2

(f) Stating time $t_s = \frac{931 \times 1485}{375 \times 146.9}$

$= 25.1$ seconds

Take roughly 10% more to account for any tolerance and variations,

$\therefore t_s = 25.1 \times 1.1$

$\simeq 27.6$ seconds

This motor is therefore suitable for only one cold or one hot start at a time until the temperature rise stabilizes again.

If this motor is started with an auto-transformer with a tapping of 80%, the motor average torque will be

$= 132.2 \times 0.64$ (curve 2, Figure 2.18)

or $T = 84.6\%$

and acceleration torque $T_a = 84.6 - 68.33$

$= 16.27\%$

i.e. $230 \times 0.1627 = 37.42$ mkg.

and $t_s = \frac{931 \times 1485}{375 \times 37.42}$

$= 98.52$ seconds

which is much more than the safe stall-withstand time.

Inference

On an ON-LOAD start, the starting time increases disproportionately, depending upon the type of switching. This load therefore cannot be accelerated within a safe stall time through an auto-transformer, even with a tapping as high as 80% although the motor possesses some accelerating torque at each point during pickup (curve 2 of Figure 2.18).

Relevant Standards

IEC	*Title*	*IS*	*BS*
60034–12/1980	Rotating electrical machines starting performance of single-speed three-phase cage induction motors for voltages up to and including 690 V	8789/1996	BS EN 60034-12/1996
60079-7/1990	Electrical apparatus for explosive gas atmosphere. Increased safety protection *e*	6381/1991	BS 5501-6/1977
	Related US Standards ANSI/NEMA and IEEE		
NEMA/MG-1/1993	Motor and generators ratings, construction, testing and performance		
NEMA/MG-2/1989	Safety Standards (enclosures) for construction and guide for selection, installation and use of rotating machines		

Notes

1 In the tables of relevant Standards in this book while the latest editions of the standards are provided, it is possible that revised editions have become available. With the advances of technology and/or its application, the updating of standards is a continuous process by different standards organizations. It is therefore advisable that for more authentic references, readers should consult the relevant organizations for the latest version of a standard.

2 Some of the BS or IS standards mentioned against IEC may not be identical.

3 The year noted against each standard may also refer to the year of its last amendment and not necessarily the year of publication.

List of formulae used

Effect of starting current on torque

$$T_r \propto \frac{I_{rr}^2 \times R_2}{S} \qquad (2.1)$$

$$\frac{T_{st}}{T_r} = \left(\frac{I_{st}}{I_r}\right)^2 \times S \qquad (2.2)$$

$$\frac{T_{st1}}{T_{st2}} = \left(\frac{I_{st1}}{I_{st2}}\right)^2 \text{ (for the same rotor resistance } R_2\text{)} \qquad (2.3)$$

$$\text{or } \frac{T_{st1}}{T_{st2}} = \left(\frac{I_{st1}}{I_{st2}}\right)^2 \times \frac{R_2}{R_2'} \text{ (for different rotor resistances)} \qquad (2.4)$$

Time of start-up

$$t_s = \frac{GD_T^2 \cdot N_r}{375 \cdot T_a} \qquad (2.5)$$

t_s = time of start in seconds

$GD_T^2 = GD_M^2 + GD_L^2$

GD_M^2 = motor and

GD_L^2 = load weight moment of inertia referred to the motor speed

$$\text{or } GD_L^2 = GD_l^2 \cdot \left(\frac{N_L}{N_r}\right)^2 \qquad (2.6)$$

GD_l^2 = weight moment of inertia of load at a speed N_L

Motor heating during start-up

$$H = I_{st}^2 \cdot R \cdot t_s \text{ (W·s.)} \qquad (2.7)$$

$$\text{also, } H = W \cdot \delta \cdot \theta \qquad (2.8)$$

W = weight of heated portion in kgm

δ = specific heat of the material of windings, in watt·s/kgm. °C.

θ = temperature rise in °C

Sharing of heat

$$\frac{H_s}{H_r} = \frac{R_1}{R_2'} \qquad (2.9)$$

H_r = rotor heat in W·s.

H_s = stator heat in W·s.

Heating during a no-load start

$$H_{n\ell} = \frac{GD_M^2 \cdot N_r^2}{730} \text{ W·s.} \qquad (2.10)$$

Heating in a motor during a stalled condition:

for the stator

$$H_{st\ell} \cdot t_{st\ell} = \theta \cdot C \qquad (2.11)$$

$H_{st\ell}$ = heat generated during stalled condition per second in watts

$t_{st\ell}$ = time for which the stalling condition prevails in seconds

C = heat capacity of the motor

$$\text{or } t_{st\ell} = \frac{\theta}{J_{ss}^2 \times 0.00552} \text{ seconds} \qquad (2.12)$$

$J_{ss} \simeq$ current density during start in A/cm^2

Further reading

Machinery Hand Book, Industrial Press Inc., 200 Madison Avenue, New York, USA.

3

Duties of Induction Motors

Contents

3.1 Duty cycles

Unless otherwise specified, the rating of the motor will be regarded as its continuous maximum rating (CMR), defined by duty S_1 as noted below. But a machine is not always required to operate at a constant load. Sometimes it must operate at varying loads, with a sequence of identical operations, involving starts, stops braking, speed control and reversals, with intermittent idle running and de-energized periods etc. (e.g. a hoist, a crane, a lift or other applications.) Using a CMR motor for such applications, with a rating corresponding to the maximum short-time loading will mean an idle capacity during no-load running or de-energized periods and a constant drain on energy, in addition to a higher cost of installation. To economize on the size of machine for such applications, IEC 60034-1 has defined a few duty cycles, as noted briefly below. These may be considered while selecting an economical size of machine and yet meet the variable load demands safely. Such motors may be running overloaded during actual loading but for shorter durations not sufficient to exceed the permissible temperature rise limits. They dissipate excessive heat during idle running or de-energized periods to reach a thermal equilibrium at the end of the load cycle. These duties are described in the following sections.

3.2 Continuous duty (CMR) (S_1)

The operation of a motor at a rated load may be for an unlimited period to reach thermal equilibrium (Figure 3.1) and possible applications are pumps, blowers, fans and compressors.

3.3 Periodic duties

3.3.1 Short-time duty (S_2)

In this case the operation of the motor is at a constant load during a given time just adequate to attain the maximum permissible temperature rise, followed by a rest and de-energized periods of long durations to re-establish equality of motor temperature with the cooling medium (Figure 3.2). The motor should restart for the next cycle only when it has attained its ambient condition.

The recommended values for short-time duty are 10, 30, 60 and 90 minutes. The type designation for a particular rating, say for 30 minutes, will be specified as S_2 – 30 minutes. Likely applications are operation of lock gates, sirens, windlasses (hoisting) and capstans.

3.3.2 Intermittent periodic duty (S_3)

This is a sequence of identical duty cycles, each consisting of a period of operation at constant load and a rest and de-energized periods. The period of energization may attain the maximum permissible temperature rise (θ_m). The period of rest and de-energization is sufficient to attain thermal equilibrium during each duty cycle (Figure 3.3). In this duty the starting current I_{st} does not significantly affect the temperature rise. Unless otherwise specified, the duration of each duty cycle should be 10 minutes. The recommended values for the cyclic duration factor *CDF* are 15%, 25%, 40% and 60%. The type designation for a particular rating, say for 40%, will be specified as S_3 – 40%.

$$\text{Cyclic duration factor } CDF = \frac{N}{N+R}$$

where

N = operation under rated conditions

R = at rest and de-energized and

θ_t = temperature rise reached during one duty cycle ($\simeq 0$)

Likely applications are valve actuators and wire drawing machines.

3.3.3 Intermittent periodic duty with start (S_4)

This is a sequence of identical duty cycles, each consisting

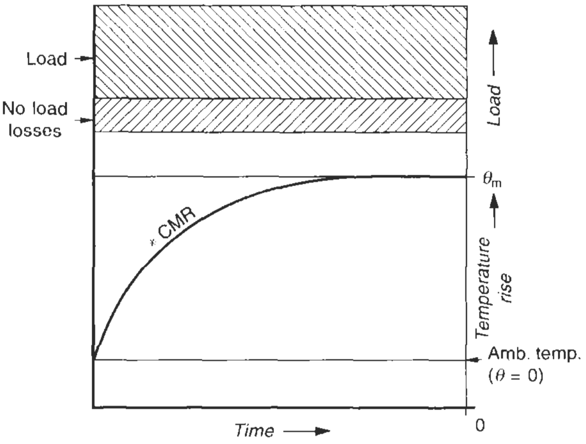

*CMR: Continuous maximum rating

Figure 3.1 Continuous duty, S_1

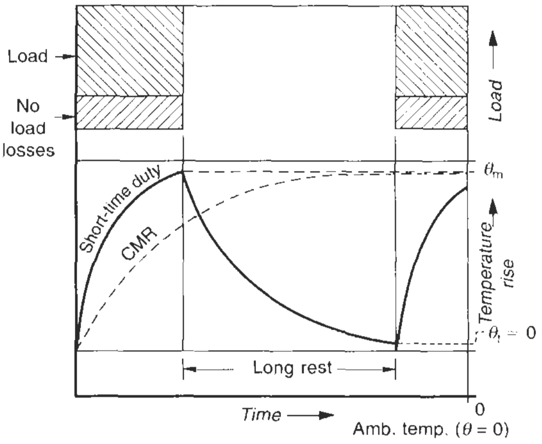

Note Short-time loading is higher than the CMR and it is true for all duties S_2 – S_{10}

Figure 3.2 Short-time duty S_2

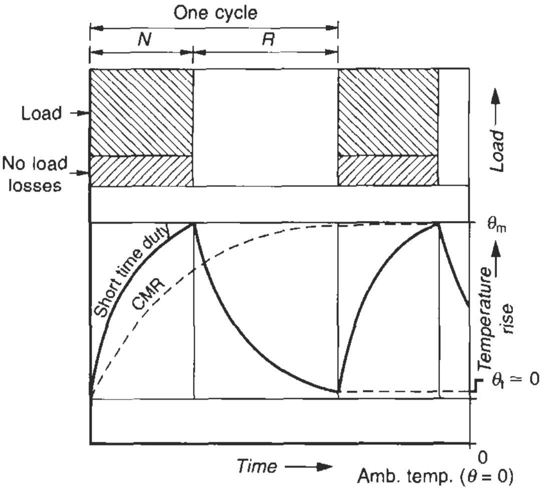

Figure 3.3 Intermittent periodic duty, S_3

of a period of start, a period of operation at constant load and a rest and de-energized periods. The starting, operating, rest and de-energized periods are just adequate to attain thermal equilibrium during one duty cycle (Figure 3.4). In this duty the motor is stopped, either by natural deceleration, after it has been disconnected from the supply source, or by mechanical brakes, which do not cause additional heating to the winding:

$$CDF = \frac{D+N}{D+N+R}$$

where
D = period of starting
N = operation under rated conditions
R = at rest and de-energized,
θ_t = temperature rise reached during one duty cycle ($\simeq 0$)

For this duty cycle, the abbreviation is followed by the indication of the cyclic duration factor, the number of duty cycles per hour (c/h) and the factor of inertia (*FI*). (See Section 3.4 for *FI*.) Thus, for a 40% *CDF* with 90 operating cycles per hour and factor of inertia of 2.5, the cycle will be represented by

S_4 – 40% – 90 c/h and *FI* – 2.5

Likely applications are hoists, cranes and lifts.

3.3.4 Intermittent periodic duty with start and brake (S_5)

This is a sequence of identical duty cycles, each consisting of a period of start, a period of operation at constant load, a period of braking and a rest and de-energized periods. The starting, operating, braking, rest and de-energized periods are just adequate to attain thermal equilibrium during one duty cycle (Figure 3.5). In this duty braking is rapid and is carried out electrically:

$$CDF = \frac{D+N+F}{D+N+F+R}$$

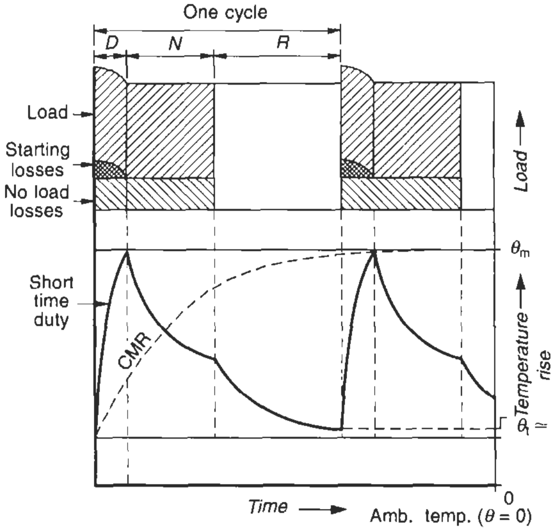

Figure 3.4 Intermittent periodic duty with starting, S_4

where
D = period of starting
N = operation under rated conditions
F = electric braking
R = at rest and de-energized, and
θ_t = temperature rise attained during one duty cycle ($\simeq 0$)

For this duty cycle also, the abbreviation is to be followed by the indication of the *CDF*, the number of duty cycles per hour (c/h) and the *FI*, e.g.

S_5 – 40% – 90 c/h and *FI* – 2.5

Likely applications are hoists, cranes and rolling mills.

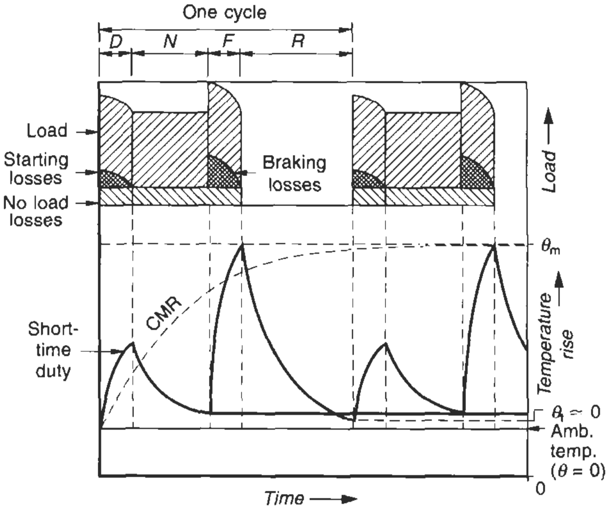

Figure 3.5 Intermittent periodic duty with starting and braking, S_5

3.3.5 Continuous duty with intermittent periodic loading (S_6)

This is a sequence of identical duty cycles, each consisting of a period of operation at constant load and a period of operation at no-load. The repeat load and no-load periods are just adequate to attain thermal equilibrium during one duty cycle. There is no rest and de-energizing period, (Figure 3.6). Unless otherwise specified, the duration of the duty cycle will be 10 minutes.

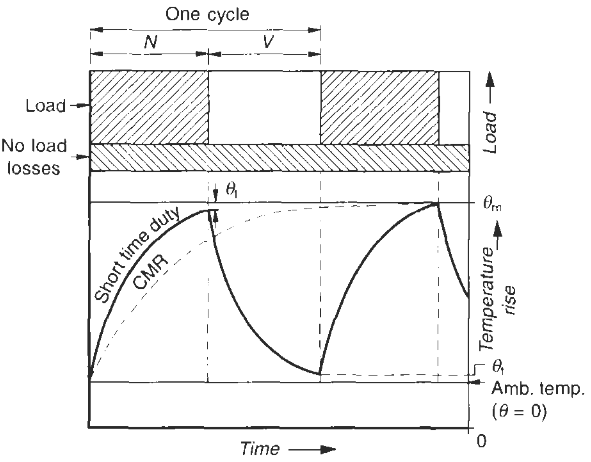

θ_l – (Corresponding to no-load heating)

Figure 3.6 Continuous duty with intermittent periodic loading, S_6

The recommended values of *CDF* are 15%, 25%, 40% and 60%:

$$CDF = \frac{N}{N+V}$$

where

N = operation under rated conditions

V = operation on no-load and

θ_t = temperature rise attained during one duty cycle
= corresponding to the no-load heating

The designation in this case will be expressed as

S_6 – 40% *CDF*

Likely applications are conveyor belts and machine tools.

3.3.6 Continuous duty with start and brake (S_7)

This is a sequence of identical duty cycles, each consisting of a period of start, a period of operation at constant load and a period of electric braking. The start, operating and braking periods are just adequate to attain thermal equilibrium during one duty cycle. There is no rest and de-energizing periods (Figure 3.7):

$$CDF = \frac{D+N+F}{D+N+F} = 1$$

where

D = period of starting

N = operation under rated conditions

F = electric braking and

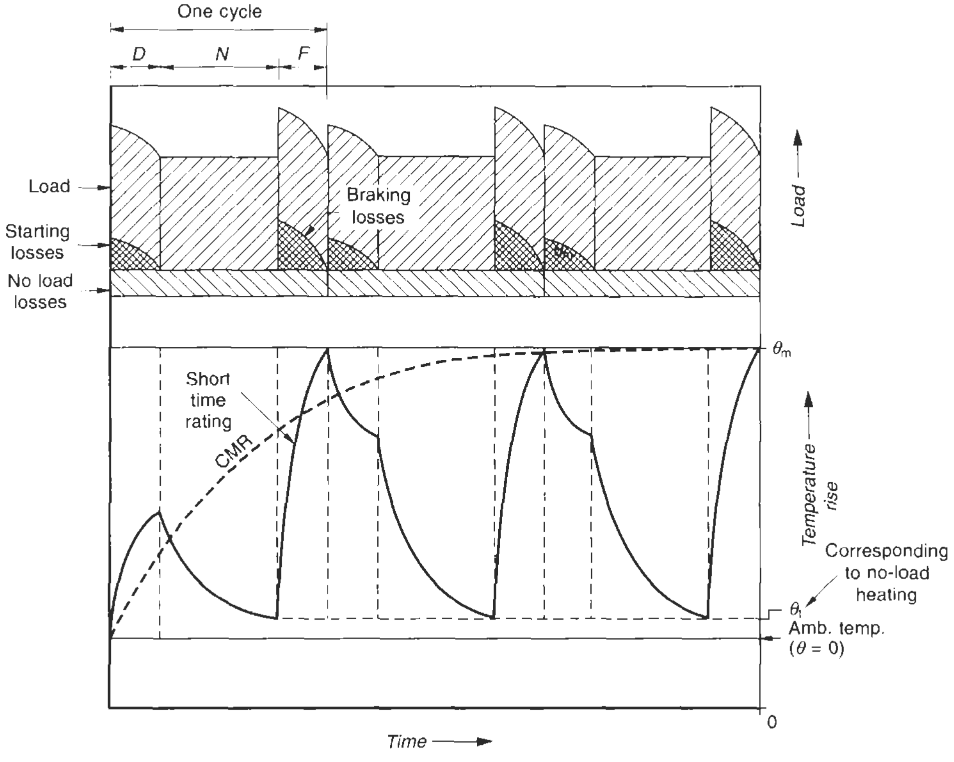

Figure 3.7 Continuous duty with starts and brakes, S_7

θ_t = temperature rise attained during one duty cycle
= corresponding to the no-load heating.

For this duty cycle also, the abbreviation is followed by the indication of number of cycles per hour and the *FI*. For example, for 300 c/h and *FI* 2.5

S_7 – 300 c/h *FI* – 2.5

Likely applications are machine tools.

3.3.7 Continuous duty with periodic speed changes (S_8)

This is a sequence of identical duty cycles, each consisting of a period of operation at constant load, corresponding to a determined speed of rotation, followed immediately by a period of operation at another load, corresponding to another speed of rotation, say, by change of number of poles. The operating periods are just adequate to attain thermal equilibrium during one duty cycle. There is no rest and de-energizing period (Figure 3.8):

$$CDF = \frac{D + N_1}{D + N_1 + F_1 + N_2 + F_2 + N_3}$$

at speed Nr_1 for load P_1

$$\text{and} \quad = \frac{F_1 + N_2}{D + N_1 + F_1 + N_2 + F_2 + N_3}$$

at speed Nr_2 for load P_2

$$\text{and} \quad = \frac{F_2 + N_3}{D + N_1 + F_1 + F_2 + F_2 + N_3}$$

at speed Nr_3 for load P_3

where

F_1, F_2 = changeover of speed by acceleration.
D = electrical braking, Nr_3 to Nr_1
N_1, N_2, N_3 = operation under rated conditions and
θ_t = temperature reached during one duty cycle
= corresponding to the heating under rated conditions (P_1 as in Figure 3.8)

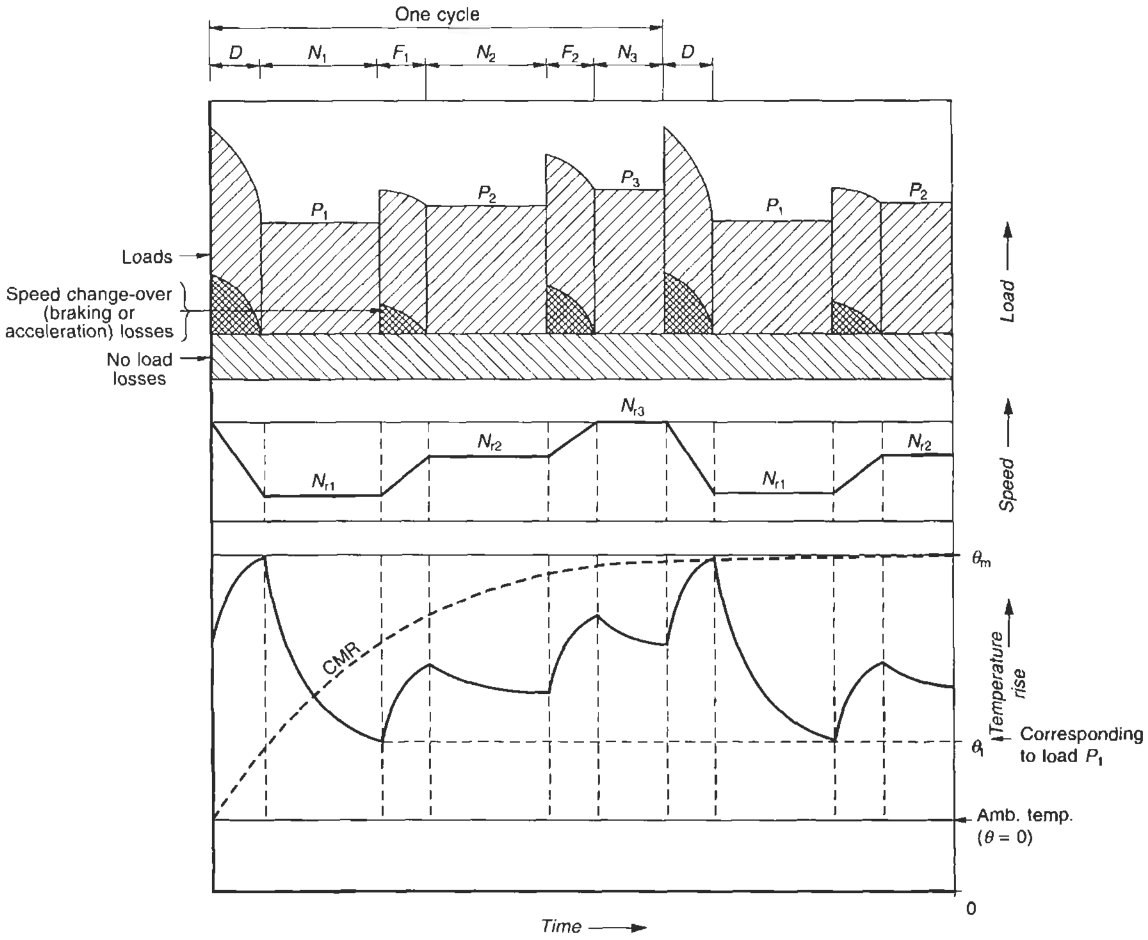

Figure 3.8 Continuous duty with periodic speed changes, S_8

We have considered three different speeds (lower Nr_1 to higher Nr_3) for this duty cycle, having three *CDF*s for one cycle, each corresponding to a different speed.

For this duty type, the abbreviation is followed by the indication of the number of duty cycles per hour, the *FI* and the load at the various speeds.

As an illustration the *CDF* must be indicated for each speed as follows:

c/h	*FI*	*kW*	*Speed* (*r.p.m.*)	*CDF* %
20	2.5	10	1440	60
20	2.5	6	960	40
20	2.5	4	730	40

Likely applications are where the motor is required to run at different speeds.

3.3.8 Non-periodic duty (S_9)

This is a type of duty in which load and speed both vary non-periodically, unlike the periodic duty cycles noted above. The motor now supplies variable load demands at varying speeds and varying overloads, but within the permissible temperature rise limits. It is a duty similar to duty cycle S_8, except that sometimes the overloads may exceed the full load but are within the thermal withstand limit of the motor (Figure 3.9):

D = period of starting
N_1, N_2, N_3 = operations within rated load (P_1)
N_4 = operation during overload (P_2)
F = changeover of speed by electrical braking
R = at rest and de-energized,
θ_t = temperature rise reached during one duty cycle ($\simeq 0$)

3.3.9 Duty with discrete constant loads (S_{10})

This is a type of duty consisting of a number of varying loads, not more than four in each cycle. Each load is performed for sufficient duration to allow the machine to attain its thermal equilibrium (Figure 3.10). It is, however, permitted that each load cycle may not be identical, provided that each discrete loading during one particular load cycle is performed for a sufficient duration to attain thermal equilibrium. The temperature attained during each discrete loading is within permissible limits or within such limits that if it exceeds the permissible limit, the thermal life expectancy of the machine is not affected. For example, performing one discrete loading P_2, as in Figure 3.10, the temperature reached (θ_2) may exceed the permissible limit (θ_m) for a short duration (t_2), but the final temperature at the end of the cycle is still such that the next duty cycle can be performed. The short duration excess temperature, θ_2, reached while performing the load duty P_2, will not however, be detrimental to the thermal life expectancy of the machine. Referring to Figure 3.10,

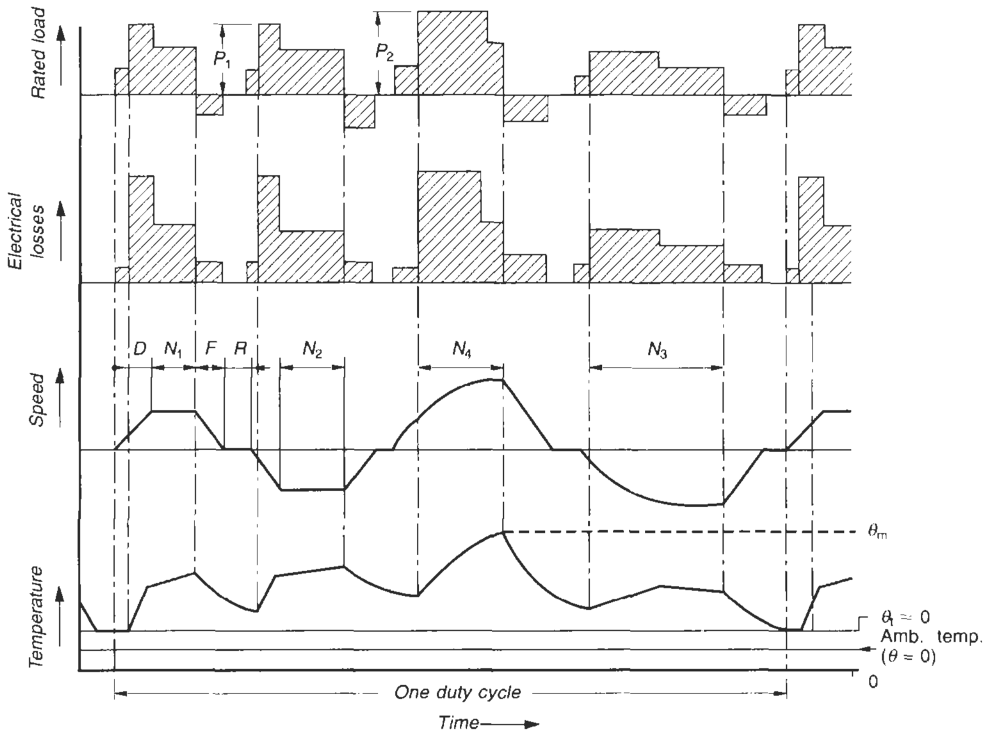

Figure 3.9 Duty with non-periodic load and speed variations, S_9

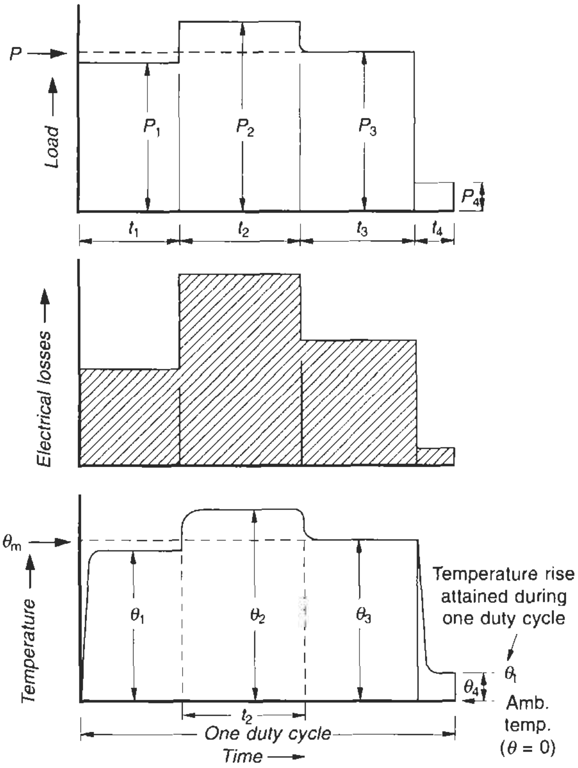

Figure 3.10 Duty with discrete constant loads, S_{10}

t_1, t_2, t_3 and t_4 = duration of operation during discrete constant loads P_1, P_2, P_3 and P_4 respectively
P = equivalent rated load as for continuous duty – S_1
F = electrical losses
θ_m = maximum permissible temperature attained for load P
θ_1, θ_2, θ_3, θ_4 = temperature reached during different discrete loads
θ_t = temperature rise reached during one duty cycle.

3.4 Factor of inertia (FI)

This is the ratio of the total moment of inertia referred to the motor shaft to the moment of inertia of the motor. If the motor moment of inertia is GD_M^2 and the load moment of inertia at motor speed, GD_L^2, then

$$FI = \frac{GD_M^2 + GD_L^2}{GD_M^2} \qquad (3.1)$$

(GD^2 values are weight moments of inertia)

Example 3.1

If $GD_M^2 = 0.16$ kg m^2

and $GD_L^2 = 0.8$ kg m^2 at motor speed

then $FI = \frac{0.16 + 0.8}{0.16} = 6$

3.5 Heating and cooling characteristic curves

The heating and cooling behaviour of an induction motor, up to around twice the rated current, may be considered as exponential, as a part of the heat generated is offset by the heat sink (heat dissipation) through the windings. But beyond $2I_r$ it should be considered adiabatic (linear), as the heat generated is now quick and the winding insulation may not be able to dissipate this heat equally quickly, when it occurs for a short duration. Since a motor would normally operate at around I_r, except during abnormal operating conditions, the exponential heating and cooling characteristics are more relevant during a normal run. They determine the performance of a motor, particularly when it is required to perform intermittent duties, and help determine safe loading, starts and brakings etc. (See curves (a) and (b) of Figure 3.11). They also assist in providing a thermal replica protection to large motors. With the help of these curves a motor protection relay (Section 12.5) can be set to closely monitor the thermal conditions prevailing within the machine, and provide an alarm or trip when the operating temperature exceeds the safe boundaries. These curves are known as thermal withstand curves and are provided with the motors as a standard practice by motor manufacturers. But when these curves are not available at a site and a thermal, IDMT or a motor protection relay (Chapter 12) is required to be set during commissioning, then the procedure described in Section 3.6 can be adopted to establish them. To determine them it is, however, essential to know the heating and cooling time constants of the motor, which are provided by the motor manufacturer.

3.5.1 Time constants

These are the times in which the temperature rises or falls by 0.632 times its maximum value θ_m and are provided by the machine manufacturer. They are also shown in Figure 3.11.

Significance of thermal time constants

The short time rating of a CMR motor varies with its thermal time constant and may differ from one manufacturer to another depending upon the cooling design adapted and its effectiveness. The shorter the thermal constant, the lower will be the short time rating a CMR motor can perform. It is not, however, practical to achieve the thermal time constant infinitely high, which is a compromise with the economics of the motor's design such as size, wall thickness of the housing, number and depth of cooling fins and efficiency of the cooling fan.

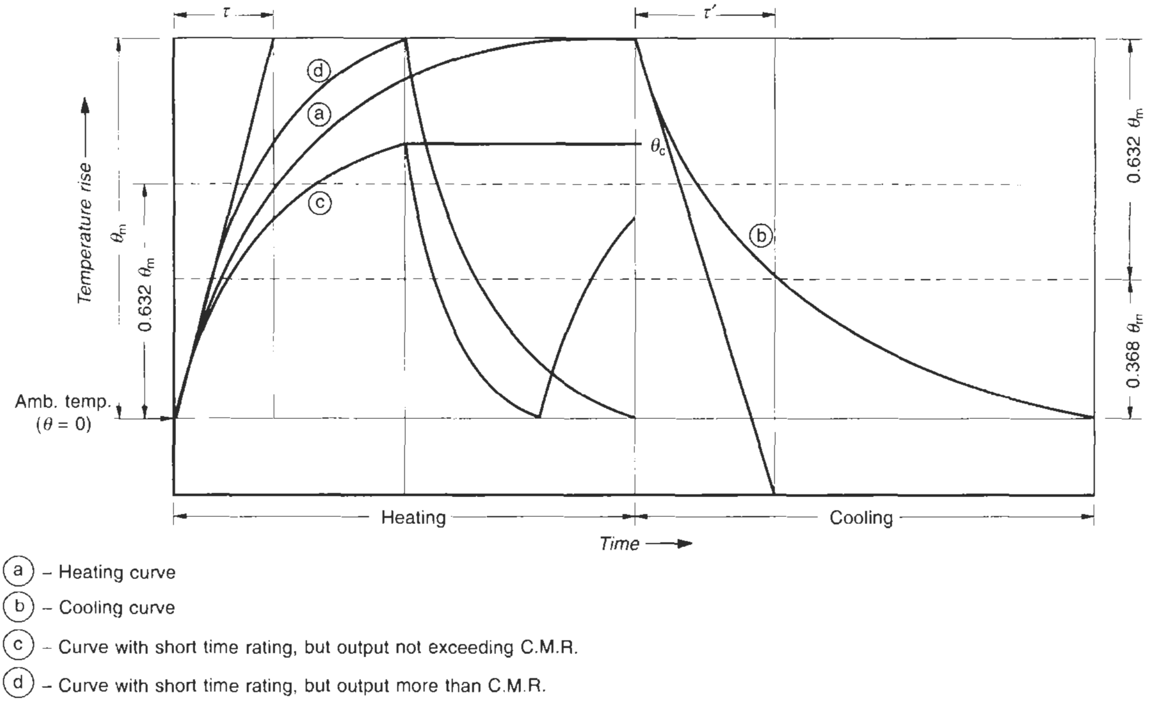

Figure 3.11 Heating and cooling curves

3.5.2 Heating curves

Exponential heating on a cold start

The temperature rise corresponding to the rated current of the machine can be expressed exponentially by

$$\theta_C = \theta_m(1 - e^{-t/\tau}) \tag{3.2}$$

where

θ_C = temperature rise of the machine on a cold start above the ambient temperature, after t hours (°C)

If θ_e is the end temperature of the machine in °C after time t and θ_a the ambient temperature in °C then

$\theta_C = \theta_e - \theta_a$

θ_m = steady-state temperature rise or the maximum permissible temperature rise of the machine under continuous operation at full load in °C, e.g. for a class *B* motor, operating continuously in a surrounding medium with an ambient temperature of 45°C

θ_m = 120 – 45 = 75°C (Table 9.1)

Note For intermittent temperature rises between θ_C and θ_m as applicable to curves (*c*) and (*d*) of Figure 3.11, θ_m may be substituted by the actual temperature on the heating or cooling curves.

t = time of heating or tripping time of the relay (hours)

τ = heating or thermal time constant (hours). The larger the machine, the higher this will be and it will vary from one design to another. It may fall to a low of 0.7–0.8 hour.

The temperature rise is a function of the operating current and varies in a square proportion of the current. The above equation can therefore be more appropriately written in terms of the operating current as

$$K \cdot I_r^2 = I_1^2(1 - e^{-t/\tau}) \tag{3.3}$$

where

I_r = rated current of the motor in A and

K = a factor that would depend upon the type of relay and is provided by the relay manufacturer. Likely values may be in the range of 1 to 1.2

I_1 = actual current the motor may be drawing

Test check

(i) For rated current at $t = 0$

$$\theta_C = \theta_e - \theta_a = I_r^2(1 - e^{-0})$$
$$= 0, \ (e^{-0} = 1)$$

or $\theta_e = \theta_a$, which is true

(ii) At $t = \infty$

$$\theta_C = \theta_m(1 - e^{-\infty})$$
$$= \theta_m, \quad (e^{-\infty} = 0)$$

which is also true.

The relative temperature rise in a period t after the operating current has changed from I_0 to I_1

$$\theta_C(\text{relative}) = (I_1^2 - I_0^2)(1 - e^{-t/\tau})$$

If I_1 is higher than I_0, it will be positive and will suggest a temperature rise. If I_1 is lower than I_0 then it will be negative and will suggest a temperature reduction.

Exponential heating on a hot start

This can be expressed by

$$\theta_h = \theta_0 + (\theta_1 - \theta_0)(1 - e^{-t/\tau})$$

and in terms of operating current

$$\theta_h = I_0^2 + (I_1^2 - I_0^2)(1 - e^{t/\tau}) \qquad (3.4)$$

where

θ_h = temperature rise of the machine on a hot start above the ambient temperature, after t hours in °C
$= \theta_e - \theta_a$

When this quantity is required to monitor the health of a machine, say, for its protection, it can be substituted by $k \cdot I_r^2$, where I_r is the equivalent maximum current at which the motor can operate continuously. It may also be considered as the current setting of the relay up to which the relay must remain inoperative.

θ_0 = initial temperature rise of the machine above the ambient in °C
$= \theta_i - \theta_a$

where θ_i is the initial temperature of the hot machine in °C before a restart

I_0 = initial current at which the machine is operating
θ_1 = end temperature rise of the machine above the ambient and
I_1 = actual current the motor may be drawing

Hence equation (3.4) can be rewritten as

$$K \cdot I_r^2 = I_0^2 + (I_1^2 - I_0^2)(1 - e^{-t/\tau})$$

For the purpose of protection, t can now be considered as the time the machine can be allowed to operate at a higher current, I_1, before a trip

$\therefore$ t = tripping time.

Simplifying the above,

$$e^{-t/\tau} = \frac{I_1^2 - kI_r^2}{I_1^2 - I_0^2}$$

or $$e^{t/\tau} = \frac{I_1^2 - I_0^2}{I_1^2 - kI_r^2}$$

and $$t = \tau \log_e \frac{I_1^2 - I_0^2}{I_1^2 - kI_r^2} \qquad (3.5)$$

With the help of this equation the thermal curve of a machine can be drawn on a log-log graph for a known τ, t versus I_1/I_r for different conditions of motor heating prior to a trip (Figure 3.12). The relay can be set for the most appropriate thermal curve, after assessing the motor's actual operating conditions and hence achieving a true thermal replica protection.

Equations (3.2) to (3.5) are applicable only when the heating or cooling process is exponential, which is true up to almost twice the rated current as noted above. Beyond this the heating can be considered as adiabatic (linear). At higher operating currents the ratio t/τ diminishes, obviously so, since the withstand time of the motor reduces sharply as the operating current rises. At currents higher than $2I_r$, the above formulae can be modified as below.

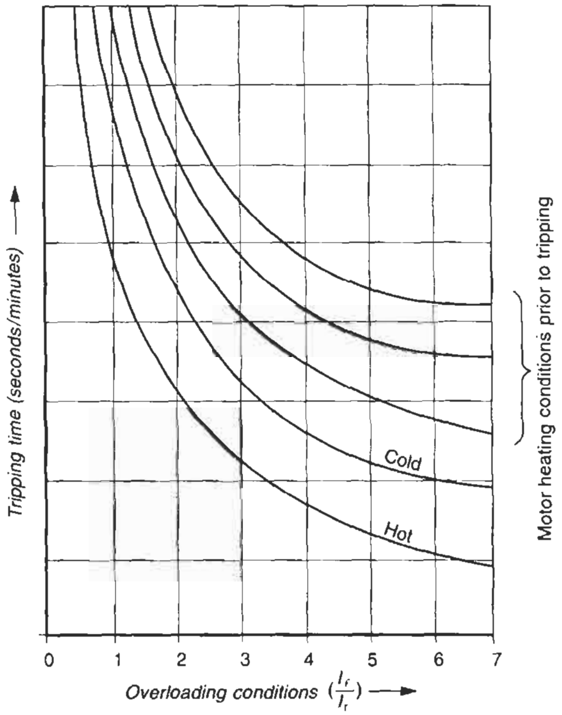

Figure 3.12 Thermal withstand curves

Adiabatic heating on a cold start

$$\theta_C = \theta_e - \theta_a = I_1^2 \cdot \frac{t}{\tau} \qquad (3.6)$$

Adiabatic heating on a hot start

$$\theta_h = \theta_e - \theta_a = \theta_0 + (\theta_1 - \theta_0)t/\tau$$

or $$= I_0^2 + (I_1^2 - I_0^2)t/\tau \qquad (3.7)$$

3.5.3 Cooling curves

The residual temperature fall in terms of time, after the motor current is reduced to zero, can be expressed exponentially by

$$\theta = \theta_m \cdot e^{-t/\tau'} \qquad (3.8)$$

where

τ' = cooling time constant in hours. It is higher than the heating time constant τ. When the machine stops, its cooling system also ceases to function, except for natural cooling by radiation and convection. The machine therefore takes a longer time to cool than it does to heat.

3.6 Drawing the thermal curves

These can be drawn for temperature versus time or current versus time as desired, depending upon the calibration of the device, such as a motor protection relay. Below we provide a brief procedure to draw these curves.

3.6.1 From cold conditions

(a) For $I_1 \leq 200\%\ I_r$

$$\theta_C = \left(\frac{I_1}{I_r}\right)^2 \cdot \theta_m \cdot (1 - e^{-t/\tau})$$

or $$\frac{\theta_C}{\theta_m} = \left(\frac{I_1}{I_r}\right)^2 \left(1 - \frac{1}{e^{t/\tau}}\right) \qquad (3.9)$$

(b) For $I_1 > 200\%$

$$\frac{\theta_C}{\theta_m} = \left(\frac{I_1}{I_r}\right)^2 \cdot \frac{t}{\tau} \qquad (3.10)$$

where θ_m and τ are design parameters and are provided by the machine manufacturer. The curves can now be plotted in the following ways.

For thermal settings

θ_C/θ_m versus t/τ different ratios of (I_1/I_r) as shown in Table 3.1(a) and Figure 3.13(a), for $I_1/I_r \leq 200\%$, and Table 3.1(b) and Figure 3.13(b) for $I_1/I_r > 200\%$. Since θ_m and τ are known, t can be calculated for different θ_C's corresponding to different motor currents. The relay can then be set to provide a thermal replica protection.

For overload settings

I_1/I_r versus t/τ different ratios of θ_c/θ_m as shown in Table 3.2(a), and Figure 3.14(a) for $I_1/I_r \leq 200\%$ and Table 3.2(b) and Figure 3.14(b) for $I_1/I_r > 200\%$. Since I_r and τ are known, t can be calculated for different overload conditions, corresponding to different temperature rises. The relay can then be set for optimum utilization of the machine.

Example 3.2

For an overload of 25%, a class B motor, operating at an ambient temperature of 45°C, the relay corresponding to 10% over temperature rise can be set to trip as follows:

i.e. $$\frac{\theta_C}{\theta_m} = 1.1 = (1.25)^2 (1 - e^{-t/\tau})$$

or $$e^{-t/\tau} = 1 - \frac{1.1}{(1.25)^2}$$

$$= 1 - 0.704$$

$$= 0.296$$

or $$e^{t/\tau} = 3.378$$

$\therefore$ $$t = \tau \log_e 3.378$$

$$= 1.5 \times 1.217 \text{ or } 1.82 \text{ hours}$$

Considering $\tau = 1.5$ hours

The relay may therefore be set to trip in less than 1.82 hours.

3.6.2 From hot conditions

Similar curves can also be plotted for hot conditions using equation (3.5) and assuming $\theta_0 = \theta_m$ for ease of plotting and to be on the safe side. The relay may then be set accordingly. For brevity these curves have not been plotted here.

One may appreciate that by employing such a motor protection relay it is possible to achieve a near thermal image protection for all ratings, types and makes of motors through the same relay by setting its $I^2 - t$ and $\theta - t$ characteristics as close to the motor's characteristics as possible. The O/C condition is normally detected through the motor's actual heating, rather than current, for optimum utilization. Moreover, the starting heats or the heat of the previous running if it existed, when the motor was reswitched after a rest or a shutdown, are also accounted for by measuring the thermal content.

Example 3.3

The motor is operating hot, say at an end temperature of 130°C. If the motor is of insulation class B and ambient temperature at 50°C then,

$$\theta_c = 130 - 50 = 80°\text{C}$$

and $$\theta_m = 120 - 50 = 70°\text{C}$$

$\therefore$ $$\frac{\theta_c}{\theta_m} = \frac{80}{70} = 114\%$$

Referring to the curves of Figure 3.13(a) the relay corresponding to an overload of 150% will trip in about $t/\tau = 0.53$, for $\frac{\theta_c}{\theta_m}$ curves of 100% or 0.70 for $\frac{\theta_c}{\theta_m}$ curve of 120%.

If τ is taken as 1.5 hours, the motor may be set to trip in about 0.60 × 1.5 hours, i.e. about 54 minutes, considering the average value of t/τ as 0.60, for a θ_c/θ_m as 114% by interpolation. It will be noted that a setting corresponding to a thermal curve of 100% will underutilize while corresponding to 120% will overutilize the motor, while the optimum true utilization will correspond to θ_c/θ_m as 114% only. It is therefore advisable to draw closer curves or use extrapolation whenever necessary to obtain a closer setting and plot a more true replica of the motor thermal characteristics.

3.7 Rating of short-time motors

If a short-time duty is performed on a Continuous Maximum Rating (CMR) motor with some no-load or idle running, the temperature rise θ may not reach its maximum value, θ_m, as shown in curve (c) of Figure 3.11. A CMR motor therefore can be operated at higher outputs on short-time duties as shown in curve (d). The extent to which a CMR motor can be over-rated to perform a particular short-time or intermittent duty is considered in the following example. While evaluating the rating for such duties, the heat during start-up and during braking and their frequency of occurrence should be considered.

Table 3.1 In terms of thermal settings $\left(\frac{\theta_C}{\theta_m} \text{ versus } \frac{t}{\tau}\right)$

(a) For $\frac{I_l}{I_r} \leq 200\%$

t/τ	$1 - \frac{1}{e^{t/\tau}}$	$\frac{\theta_C}{\theta_m} = \left(\frac{I_l}{I_r}\right)^2 \times \left(1 - \frac{1}{e^{t/\tau}}\right)$					
		$\frac{I_l}{I_r} = 0.5$	$\frac{I_l}{I_r} = 0.75$	$\frac{I_l}{I_r} = 1.0$	$\frac{I_l}{I_r} = 1.25$	$\frac{I_l}{I_r} = 1.5$	$\frac{I_l}{I_r} = 2.0$
						Refer to the curves in Figure 3.13(a)	
1	$1 - \frac{1}{e^1} = 1 - \frac{1}{2.718} = 0.632$	0.158	0.355	0.632	0.987	1.422	2.528
2	$1 - \frac{1}{e^2} = 1 - \frac{1}{7.389} = 0.865$	0.216	0.486	0.865	1.35	1.946	3.46
3	$1 - \frac{1}{e^3} = 1 - \frac{1}{20.08} = 0.95$	0.237	0.534	0.95	1.48	2.137	3.8
4	$1 - \frac{1}{e^4} = 1 - \frac{1}{54.60} = 0.982$	0.2455	0.552	0.982	1.53	2.209	3.928
5	$1 - \frac{1}{e^5} = 1 - \frac{1}{148.4} = 0.993$	0.248	0.558	0.993	1.55	2.234	3.97

These high values of θ_C/θ_m are not permissible. Plot curves for $t/\tau < 1$ also for settings at higher currents.

(b) For $\frac{I_l}{I_r} > 200\%$

t/τ	$\frac{\theta_C}{\theta_m} = \left(\frac{I_l}{I_r}\right)^2 \cdot t/\tau$				
	$\frac{I_l}{I_r} = 2.5$	$\frac{I_l}{I_r} = 3.0$	$\frac{I_l}{I_r} = 4.0$	$\frac{I_l}{I_r} = 5.0$	$\frac{I_l}{I_r} = 6.0$
0.02	0.125	0.18	0.32	0.5	0.72
0.04	0.25	0.36	0.64	1.0	1.44
0.06	0.375	0.54	0.96	1.5	2.16
0.08	0.5	0.72	1.28	2.0	2.88
0.1	0.625	0.90	1.6	2.5	3.6
0.2	1.25	1.8	3.2	5.0	7.2

1. High values of θ_c/θ_m indicate that the motor can sustain such high currents for short durations only, i.e. at low t/τ.
2. These are danger areas and the machine must be prevented from operating in these areas as far as possible. If absolutely essential, the maximum permissible temperature may be exceeded for only a short period to protect the insulation from a rapid deterioration or damage (Section 9.2).

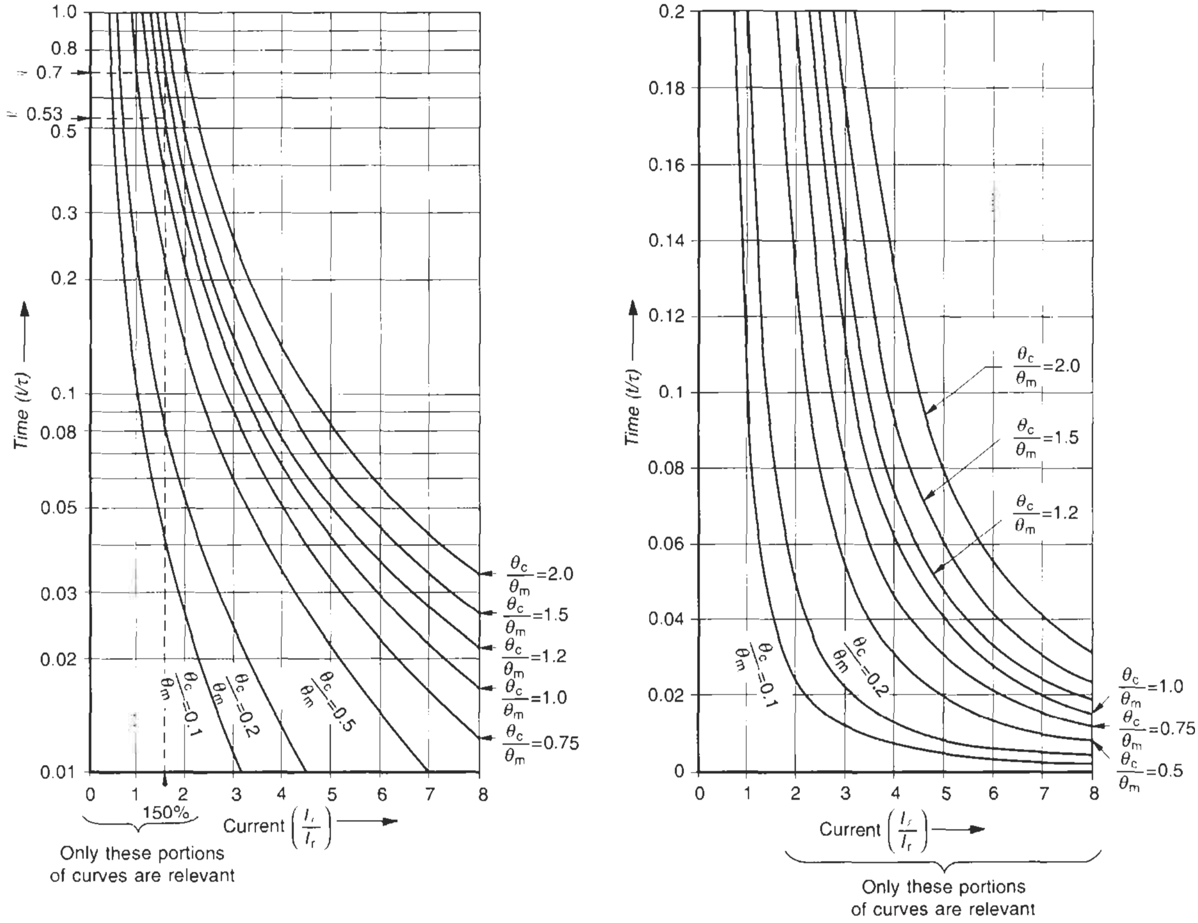

(a) For $\frac{I_l}{I_r} \leq 200\%$

(b) For $\frac{I_l}{I_r} > 200\%$

Note For ease of illustration two graphs are drawn $\left(\frac{I_l}{I_r} \leq 200\% \text{ and } \frac{I_l}{I_r} > 200\%\right)$. For actual use, the relevant portions of the graphs (as marked) alone must be drawn on one common graph. More points can be plotted in the required region for a closer setting of the relay.

Figure 3.13 Thermal curves to set the relay for over-current protection corresponding to different operating temperatures

Example 3.4

(a) If a CMR 25 h.p. motor, with a thermal heating constant of 1.5 hours reaches a maximum temperature of 115°C in continuous operation with an ambient temperature of 40°C, then the half-hour rating P of this motor can be determined as below.

Compare the temperature rises which are proportional to the losses at the two outputs and the losses are proportional to the square of the load. Ignoring the mechanical losses then

θ_m for load 'P' $\propto P^2$ (a)

and $\theta_{(1/2\,\text{hr.})}$ for 25 h.p. $\propto (25)^2$ when run just for half an hour (b)

Since a 25 h.p. motor now operates only for half an hour

$$\therefore\ \theta = \theta_m\left(1 - e^{-\frac{0.5}{1.5}}\right) \qquad \text{(c)}$$

where $\theta_m = 115 - 40$

$= 75°\text{C}$

From (a) and (b)

$$\theta_m = \theta \cdot \left(\frac{P}{25}\right)^2$$

$$\text{or } \theta_m = \theta_m\left(1 - e^{-\frac{0.5}{1.5}}\right) \cdot \left(\frac{P}{25}\right)^2$$

$$\text{or } \quad 1 = (1 - 0.716) \cdot \left(\frac{P}{25}\right)^2$$

$$\text{or } \quad P = \frac{25}{\sqrt{0.284}}$$

$$= 47 \text{ h.p.}$$

Table 3.2 In terms of current settings $\left(\frac{I_1}{I_r} \text{ vs } \frac{t}{\tau}\right)$

(a) For $\frac{I_1}{I_r} \leq 200\%$, using the same equation

$$\frac{I_1}{I_r} = \sqrt{\frac{\theta_c}{\theta_m} \cdot \frac{1}{\left(1 - \frac{1}{e^{t/\tau}}\right)}}$$

t/τ	$1 - \frac{1}{e^{t/\tau}}$	$\frac{I_1}{I_r} = \sqrt{\frac{\theta_c}{\theta_m} \cdot \frac{1}{(1 - e^{t/\tau})}}$								
		$\frac{\theta_c}{\theta_m} = 0.1$	$\frac{\theta_c}{\theta_m} = 0.2$	$\frac{\theta_c}{\theta_m} = 0.5$	$\frac{\theta_c}{\theta_m} = 0.75$	$\frac{\theta_c}{\theta_m} = 1.0$	$\frac{\theta_c}{\theta_m} = 1.2$	$\frac{\theta_c}{\theta_m} = 1.5$	$\frac{\theta_c}{\theta_m} = 2.0$	
0.01	$1 - \frac{1}{1.01} = 0.0099$	3.178	4.495	7.107	8.704	10.05	11.01	12.31	14.21	*
0.05	$1 - \frac{1}{1.05} = 0.0476$	1.449	2.05	3.241	3.97	4.58	5.02	5.61	6.48	
0.10	$1 - \frac{1}{1.105} = 0.095$	1.026	1.451	2.294	2.81	3.24	3.55	3.97	4.59	
0.20	$1 - \frac{1}{1.22} = 0.180$	0.745	1.054	1.667	2.04	2.36	2.58	2.89	3.33	
0.50	$1 - \frac{1}{1.65} = 0.394$	0.504	0.712	1.126	1.38	1.59	1.74	1.95	2.25	
1.0	$1 - \frac{1}{2.718} = 0.632$	0.398	0.562	0.889	1.089	1.26	1.38	1.54	1.78	

Notes (1) For a closer overload protection, more curves should be drawn for $t/\tau > 1$.
(2) *These points are not relevant for $I_1/I_r < 200\%$.

(b) $\frac{I_1}{I_r} > 200\%$, using equation (b)

i.e. $\frac{I_1}{I_r} = \sqrt{\frac{\theta_c}{\theta_m} \cdot \frac{\tau}{t}}$

t/τ	$\frac{I_1}{I_r} = \sqrt{\frac{\theta_c}{\theta_m} \cdot \frac{\tau}{t}}$								
	$\frac{\theta_c}{\theta_m} = 0.1$	$\frac{\theta_c}{\theta_m} = 0.2$	$\frac{\theta_c}{\theta_m} = 0.5$	$\frac{\theta_c}{\theta_m} = 0.75$	$\frac{\theta_c}{\theta_m} = 1.0$	$\frac{\theta_c}{\theta_m} = 1.2$	$\frac{\theta_c}{\theta_m} = 1.5$	$\frac{\theta_c}{\theta_m} = 2.0$	
0.02	2.24	3.16	5.0	6.12	7.07	7.74	8.66	10.0	**
0.04	1.58	2.24	3.53	4.33	5.0	5.48	6.12	7.07	
0.06	1.29	1.82	2.89	3.53	4.08	4.47	5.0	5.77	
0.08	1.12	1.58	2.5	3.06	3.53	3.87	4.33	5.0	
0.10	1.0	1.41	2.24	2.74	3.16	3.46	3.87	4.47	
0.20	0.71	1.0	1.58	1.94	2.24	2.45	2.74	3.16	

**These conditions may not occur even on a fault in the motor.

Note For obtaining a true replica of the motor thermal characteristics, $I^2 - t$ and $\theta - t$ more curves may be plotted for $t/\tau < 0.02$.

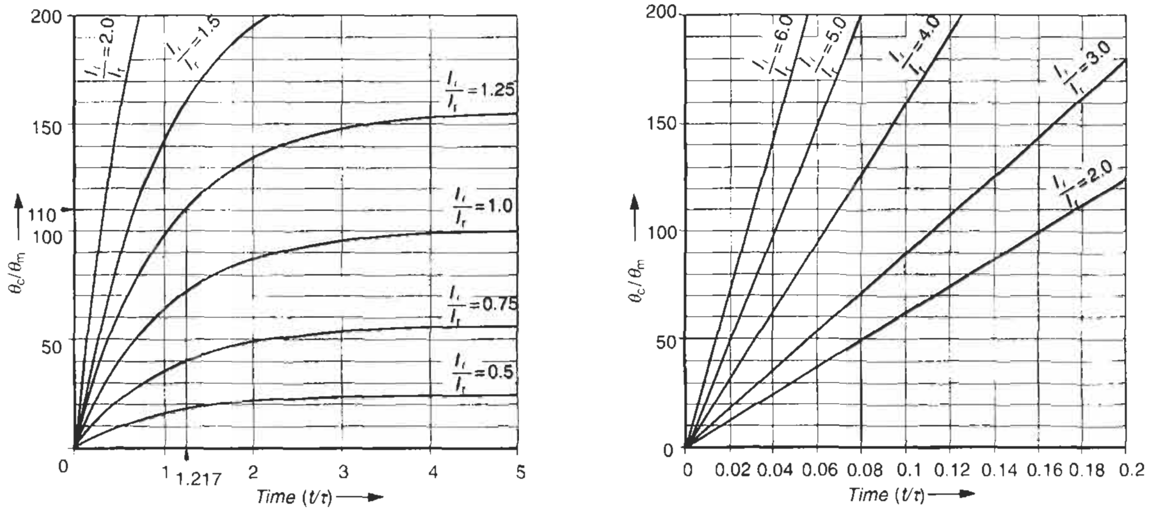

(a) For $\frac{I_l}{I_r} \le 200\%$

(b) For $\frac{I_l}{I_r} > 200\%$

Note For actual use combine curves $\frac{I_l}{I_r} \le 200\%$ and $\frac{I_l}{I_r} > 200\%$ on one graph.

Figure 3.14 Thermal curves to set the relay for over-temperature protection corresponding to different overload conditions

(b) Similarly, if the rating is 1 hour, then

$$P = \frac{25}{\sqrt{1 - e^{-.667}}}$$

$$= \frac{25}{\sqrt{0.487}}$$

$$\simeq 35.8 \text{ h.p.}$$

3.8 Equivalent output of short-time duties

For varying loads (Figure 3.15) or for short-time duties (Figure 3.16) it may not be necessary to select a motor corresponding to the maximum load during one cycle. Consider a motor that is always energized under the fluctuating loads of Figure 3.15. Then the equivalent requirement can be determined as below, ensuring that the output achieved and the motor chosen will be sufficient to develop a torque, during all conditions of voltages, adequate to drive even the highest load and meet its torque requirement. Consider heating to be proportional to the square of the loading, ignoring the mechanical losses. Then

$$P_{eq}(\text{r.m.s.}) = \sqrt{\frac{P_1^2 \cdot t_1 + P_2^2 \cdot t_2 + P_3^2 \cdot t_3}{t_1 + t_2 + t_3}} \qquad (3.11)$$

Instead, if the load values represent the torque requirement, then

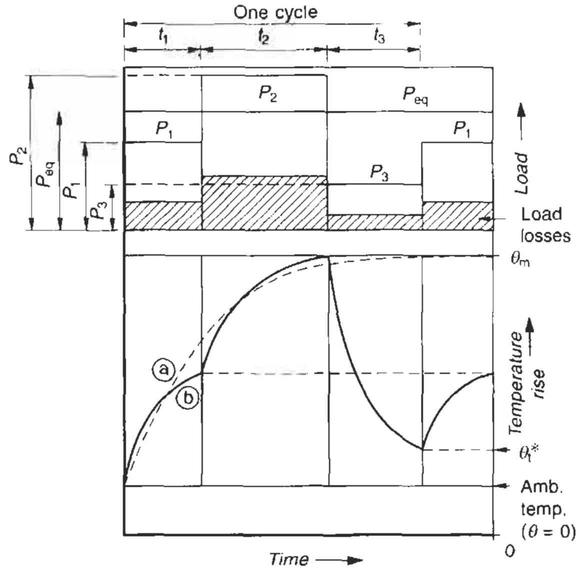

* θ_1 – Corresponding to load P_3

ⓐ – Thermal curve of a motor with a rating of P_{eq}.

ⓑ – Heating curves for varying loads, the average heating not exceeding the permissible temperature rise θ_m

Figure 3.15 Equivalent output of short-time duties (varying loads)

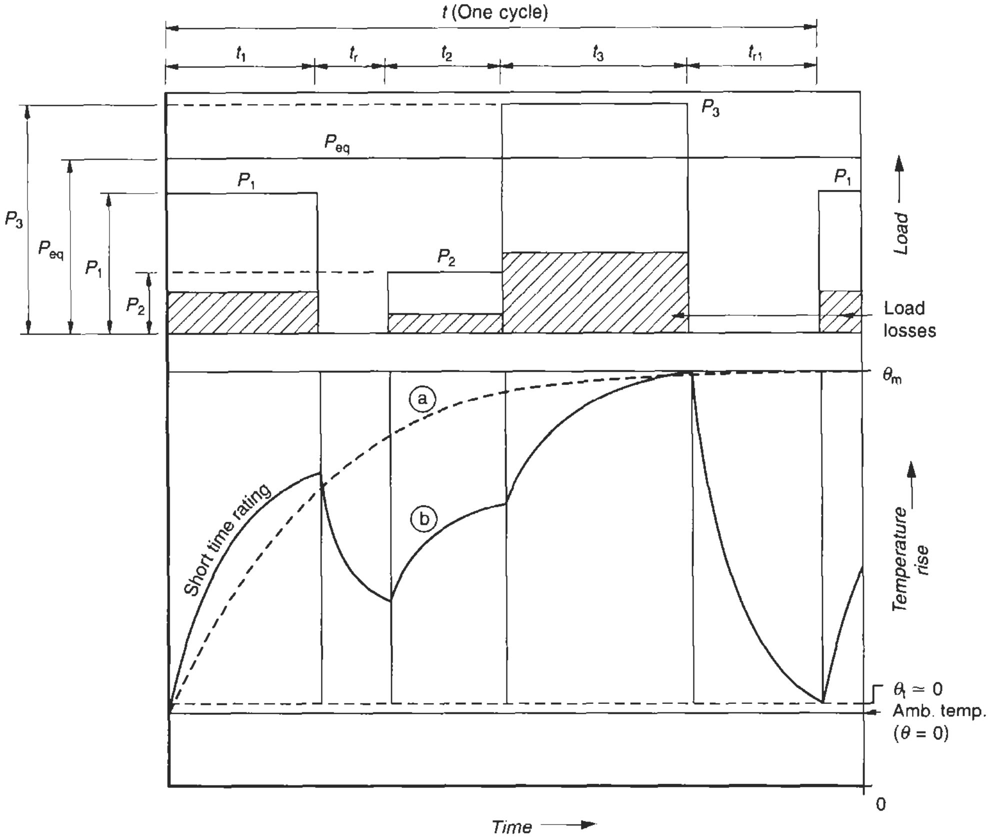

t_r and t_{r1} periods of rest.

ⓐ – Thermal curve of a motor with a rating of P_{eq}.

ⓑ – Thermal curves for intermittent loads, the average heating not exceeding the permissible temperature rise θ_m

Figure 3.16 Equivalent output of short-time duties

$$T_{eq}\,(\text{r.m.s.}) = \sqrt{\frac{T_1^2 \cdot t_1 + T_2^2 \cdot t_2 + T_3^2 \cdot t_3}{t_1 + t_2 + t_3}} \qquad (3.12)$$

and motor output

$$P_{eq} = \frac{T_{eq} \cdot N_r}{974}\ \text{kW}$$

If the cycle has a short-time rating, with a period of energization and one of rest, the motor will obviously cool during the de-energizing period, and depending upon the peak load and the rest periods, a comparatively lower output motor can perform duties at higher loads. The equivalent output for the load cycle of Figure 3.16 is

$$P_{cq} = \sqrt{\frac{P_1^2 \cdot t_1 + P_2^2 \cdot t_2 + p_3^2 \cdot t_3}{t}}$$

Since total time t is more in this instance, the equivalent power required will be less.

Example 3.5
Determine the motor rating, for a 10-minute cycle operating as shown in Figure 3.17. There is no rest period, but in one cycle, the motor runs idle twice at no load for 2 minutes each. The cycle starts with a load requirement of 10.5 kW for 4 minutes followed by an idle running, a load of 7.5 kW for 2 minutes, again with an idle running and then the cycle repeats.

Solution
Assuming the no-load losses to be roughly 5% of the motor rating of, say, 10 kW, then

$$P_{eq} = \sqrt{\frac{(10.5)^2 \times 4 + (0.5)^2 \times 2 + (7.5)^2 \times 2 + (0.5)^2 \times 2}{10}}$$

$$= \sqrt{\frac{441 + 0.50 + 112.50 + 0.50}{10}}$$

$$= \sqrt{55.45}$$

$$\simeq 7.45\ \text{kW}$$

The nearest standard rating to this is 7.5 kW, and a motor of this rating will suit the duty cycle. To ensure that it can also meet the torque requirement of 10.5 kW, it should have a minimum pull-out torque of 10.5/7.5 or 140% with the slip at this point as low as possible so that when operating at 140%

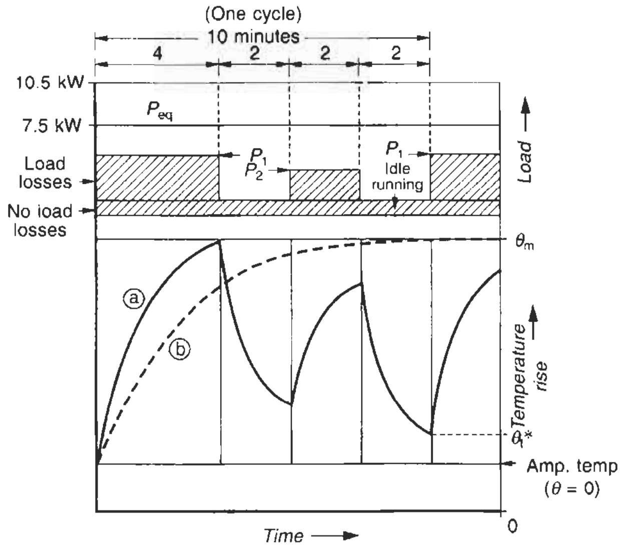

*θ_t – Corresponding to no-load losses
ⓐ – Actual heating curve
ⓑ – Thermal curve for 7.5 kW motor

Figure 3.17 Determining the motor rating (CMR) for a short-time duty

on its speed–torque curve, the motor will not drop its speed substantially and cause high slip losses.

Note For such duties, the starting heat is kept as low as possible by suitable rotor design to eliminate the effect of frequent starts and stops. The margin for starting heat and braking heat should be taken into account if these are considerable. The manufacturer is a better guide for suggestions here.

3.9 Shock loading and use of a flywheel

The application of a sudden load on the motor for a short duration, in the process of performing a certain load duty, is termed 'shock loading'. This must be taken into account when selecting the size of a motor. Electric hammers, piston pumps, rolling mills, cane crushers and cane levellers, sheet punching, notching, bending and cutting operations on a power press, a brake press or a shearing machine are a few examples of shock loading. They all exert a sudden load, although for a very short duration, during each load cycle, and may damage the motor as well as the machine. Such machines, therefore, experience a sharp rise and fall in load. Figure 3.18 depicts such a load cycle, having excessive load P_2 for a short

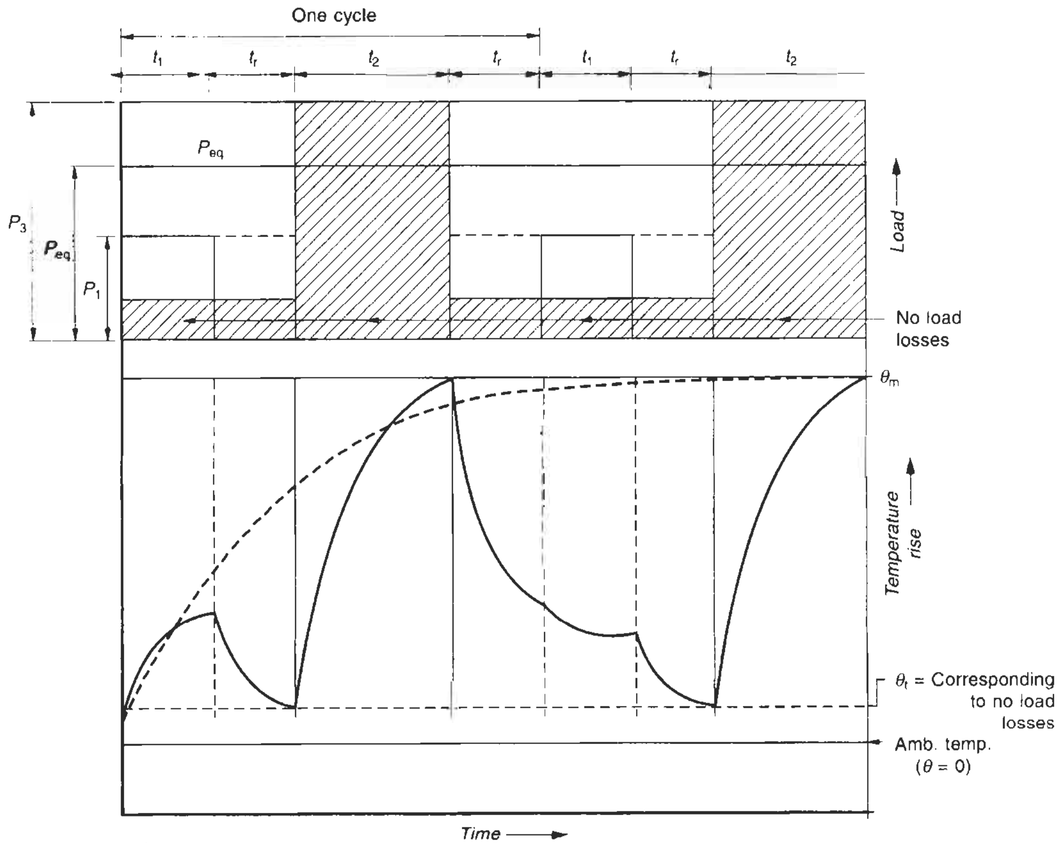

P_1 – Light loading
P_2 – Severe to very severe loading

Figure 3.18 A typical shock loading duty duration t_2 a very light load P_1 for a duration t_1 and at no load for rest of one cycle.

For such load requirements, one may either choose a comparatively larger motor to sustain the load and torque requirements during shock loading or a smaller motor, depending upon the average equivalent loading P_{eq} as discussed earlier. When choosing a smaller motor it would be advisable to absorb and smooth the shocks first to contain the additional shock burden on the motor, as well as on the main machine. This is made possible by adding more moments of inertia to the drive by introducing a flywheel in the system, as shown in Figure 3.19. The flywheel will now share a substantial jerk of the peak load, because it possesses a high inertia, on the one hand, and is already in motion, on the other, before the load jerk is applied. The motor now has to share only a moderate jerk and a smaller motor can safely perform the required shock duty. During peak load, the stored kinetic energy of the flywheel is utilized to perform the load requirement. This energy is regained when the motor picks up after performing the task. Motors for such applications can be built with larger air gaps which may mean a low power factor and a higher slip, but a higher capacity to sustain shocks.

3.9.1 Size of flywheel

This is a mechanical subject, but is discussed briefly for more clarity. The size of the flywheel, as well as the size of the motor, will depend upon the speed variation that will be permissible for the type of duty being performed. It should be such that by the time the machine must perform the next operation it has gained enough momentum and regained its consumed energy capable of performing the next operation without undue stress on the motor. This permissible speed variation may be as low as 1–2% in steam engines and as high as 15–20% for punches and shears, etc.

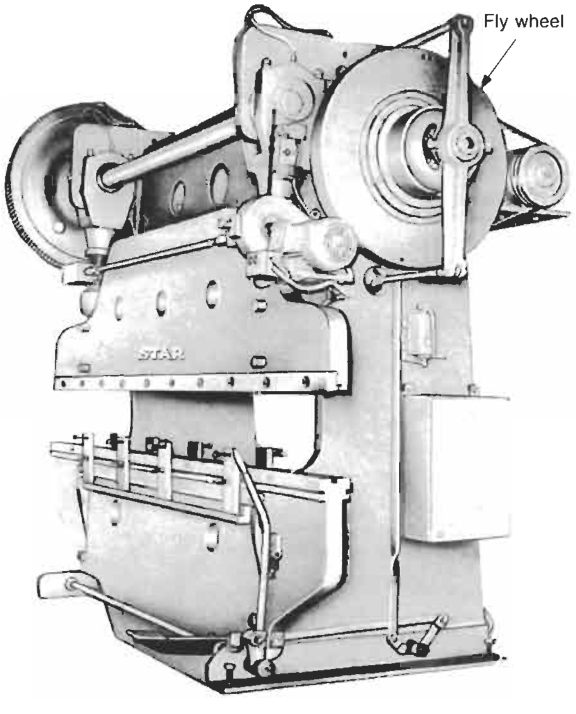

Figure 3.19 A brake press illustrating the use of a flywheel (Courtesy: Prem Engineering Works)

3.9.2 Energy stored by the flywheel

$$F = \frac{W \cdot V_1^2}{2 \cdot g} \text{ Joules} \tag{3.13}$$

where

F = energy stored by the flywheel in Joules
W = weight of the flywheel in kg
V_1 = velocity of the flywheel in m/s
g = 9.81 m/s^2

After performing the duty, if the velocity of the flywheel drops to V_2 then the energy shared by the flywheel while absorbing the shock load

$$= \frac{W(V_1^2 - V_2^2)}{2 \cdot g} \text{ Joules}$$

From the peak load P_2 and from the available h.p. of the motor P_{eq}, we can determine the energy to be shared by the flywheel, i.e.

$$T_2 - T_{eq} = \frac{W(V_1^2 - V_2^2)}{2 \cdot g} \tag{3.14}$$

(T_2 and T_{eq} are in Joules)
From this one will be able to ascertain the weight of the flywheel in kg. The velocity V of the flywheel is a design parameter of the basic machine and is derived from there. Based on the speed of the flywheel and weight W, the diameter and width and other parameters, as required to design a flywheel, Figure 3.20 can be easily determined with the help of any mechanical engineering handbook.

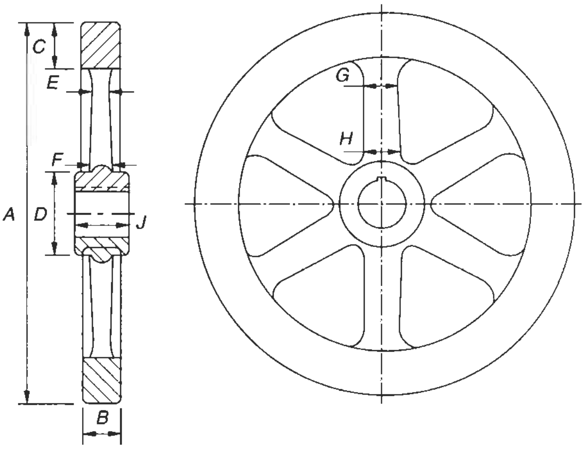

Figure 3.20 Flywheel

Relevant Standards

IEC	*Title*	*IS*	*BS*
60034-1/1996	Rotating electrical machines Rating and performance	4722/1992 325/1996	BSEN 60034-/1995
60072-1/1991	Dimensions and output series for rotating electrical machines. Frame number 56 to 400 and flange number 55 to 1080	1231/1991	BS 5000-10/1989 BS 4999-141/1987
60072-2/1990	Dimensions and output series for rotating electrical machines. Frame number 355 to 1000 and flange number 1180 to 2360	1231/1991	BS 5000-10/1989 BS 4999-103/1987
60072-3/1994	Dimensions and output series for rotating electrical machines Small built-in motors. Flange number BF 10 to BF50	996/1991	BS 5000-11/1989

Related US Standards ANSI/NEMA and IEEE

NEMA/MG-1/1993	Motors and generators ratings, construction, testing, and performance
NEMA/MG-2/1989	Safety Standards (enclosures) for construction and guide for selection, installation and use of rotating machines
NEMA/MG 10/1994	Energy management guide for selection and use of three-phase motors.

Notes

1 In the tables of relevant Standards in this book while the latest editions of the standards are provided, it is possible that revised editions have become available. With the advances of technology and/or its application, the updating of standards is a continuous process by different standards organizations. It is therefore advisable that for more authentic references, readers should consult the relevant organizations for the latest version of a standard.

2 Some of the BS or IS standards mentioned against IEC may not be identical.

3 The year noted against each standard may also refer to the year of its last amendment and not necessarily the year of publication.

List of formulae used

Factor of inertia

$$FI = \frac{GD_M^2 + GD_L^2}{GD_M^2} \qquad (3.1)$$

GD_M^2 = M.I of motor

GD_L^2 = M.I of load at motor speed
M.I. = moment of interia

Heating curves

Exponential heating on a cold start

$$\theta_c = \theta_m(1 - e^{-t/\tau}) \qquad (3.2)$$

θ_c = temperature rise on a cold start above θ_a after t hours in °C.
= $\theta_e - \theta_a$
θ_e = end temperature of the machine in °C after time t
θ_a = ambient temperature in °C
θ_m = steady-state temperature rise at full load in °C
t = tripping time of the relay in hours
τ = heating or thermal time constant in hours

$$K \cdot I_r^2 = I_1^2(1 - e^{-t/\tau}) \qquad (3.3)$$

I_r = rated current of the motor in A
K = a factor that depends upon the type of relay (generally 1 to 1.2)
I_1 = actual current

Exponential heating on a hot start

$$\theta_h = I_0^2 + (I_1^2 - I_0^2)(1 - e^{-t/\tau}) \qquad (3.4)$$

θ_h = temperature rise on a hot start above θ_a after t hour in °C.
= $\theta_e - \theta_a$
I_0 = initial current at which the machine was operating
I_1 = actual current of the machine

$$t = \tau \log_e \frac{I_1^2 - I_0^2}{I_1^2 - kI_r^2} \qquad (3.5)$$

Adiabatic heating on a cold start

$$\theta_C = \theta_e - \theta_a = I_1^2 \cdot \frac{t}{\tau} \qquad (3.6)$$

Adiabatic heating on a hot start

$$\theta_h = \theta_e - \theta_a = I_0^2 + (I_1^2 - I_0^2)t/\tau \qquad (3.7)$$

Cooling curves

Exponential temperature fall when $I_1 = 0$

$$\theta = \theta_m \cdot e^{-t/\tau'} \qquad (3.8)$$

τ' = cooling time constant in hours

To draw the thermal curves

From cold conditions

(a) When $I_1 \leq 200\%\ I_r$

$$\frac{\theta_C}{\theta_m} = \left(\frac{I_1}{I_r}\right)^2 \left(1 - \frac{1}{e^{t/\tau}}\right) \tag{3.9}$$

(b) When $I_1 > 200\%$

$$\frac{\theta_C}{\theta_m} = \left(\frac{I_1}{I_r}\right)^2 \cdot \frac{t}{\tau} \tag{3.10}$$

Equivalent output of short-time duties

$$P_{eq}(\text{r.m.s}) = \sqrt{\frac{P_1^2 \cdot t_1 + P_2^2 \cdot t_2 + P_3^2 \cdot t_3}{t_1 + t_2 + t_3}} \tag{3.11}$$

$$T_{eq}(\text{r.m.s}) = \sqrt{\frac{T_1^2 \cdot t_1 + T_2^2 \cdot t_2 + T_3^2 \cdot t_3}{t_1 + t_2 + t_3}} \tag{3.12}$$

$$P_{eq} = \frac{T_{eq} \cdot N_r}{974} \text{ kW}$$

Shock loading

Energy stored by the flywheel

$$F = \frac{W \cdot V_1^2}{2 \cdot g} \text{ Joules} \tag{3.13}$$

F = energy stored by the flywheel in Joules
W = weight of the flywheel in kg
V_1 = velocity of the flywheel in m/s
$g = 9.81$ m/s^2

Energy to be shared by the flywheel

$$T_2 - T_{eq} = \frac{W(V_1^2 - V_2^2)}{2 \cdot g} \tag{3.14}$$

T_2 = corresponding to peak load P_2
T_{eq} = corresponding to the h.p. of the motor

4

Starting of Squirrel Cage Induction Motors

Contents

An induction motor can be regarded as a transformer with a small air gap in the magnetic circuit. When at rest, having no induced back e.m.f., it can be regarded as a transformer with a short-circuited secondary. A squirrel cage induction motor therefore draws a very high starting current, as noted in Section 1.2.1. However, it reduces substantially in a slip-ring motor due to the high impedance of the rotor circuit.

The starting of an induction motor does not relate to simple switching alone. It also involves its switchgears to control its starting inrush current, starting torque, or both, and its overload and short-circuit protection.

The following are common methods to start a squirrel cage motor, depending upon the limitation, if any, on the magnitude of switching current, I_{st}.

4.1 Direct on-line starting (DOL)

This is an ideal type of starting, and is simple and economical. In this type the full voltage is applied across the stator windings. The torque developed by the motor is maximum. The acceleration is fast and the heat of starting is low (Figure 4.1(a)). For heavy rotating masses, with large moments of inertia, this is an ideal switching method. The only limitation is the initial heavy inrush current, which may cause severe voltage disturbances to nearby feeders (due to a large $I_{st} \cdot Z$ drop). With this in mind, even local electricity authorities sometimes restrict the use of DOL starting beyond a certain rating, say, 10 h.p., for small installations. For large installations, this condition may be of little significance as, in most cases, the power from the electricity authorities may be available on HT 3.3–33 kV. When it is so, a transformer is provided at the receiving end for the distribution of power on the LT side thus eliminating the cause of a line disturbance due to a voltage dip. On the HT side, the effect of a voltage dip, caused by small motors, is of little significance. However, the method of DOL switching for larger motors is recommended only where the supply source has enough capacity to feed the starting kVA of the motor, with a voltage dip of not more than 5% on the LT side.

For a large LT motor, say, 300 h.p. and above, there is no economical alternative other than DOL starting. One can, however, employ delayed action coupling (Section 8.3) with DOL starting to start the motor lightly and quickly. (See also Example 7.1, in Chapter 7 for more clarity.). Soft starting through a solid-state device (Section 6.16.1) or a liquid electrolyte (Section 4.2.3) are costly propositions. Autotransformer starting is also expensive due to the cost of its incoming and outgoing control gears and the cost of the autotransformer itself. This is also the case with *Y/Δ* starting. Moreover, *A/T* and *Y/Δ* startings are reduced voltage startings and influence the starting torque of the motor. It is possible that the reduced starting torque may not be adequate to drive the load successfully and within the thermal withstand time of the motor. Unlike in smaller ratings, where it is easy and economical to obtain a high T_{st} characteristic, in large motors, achieving a high T_{st}, say, 200% and above, may be difficult and uneconomical. See Section 2.2.

With the availability of large contactors up to 1000 A and breakers up to 6400 A, DOL starting can be used for LT motors of any size, say, up to 1000 h.p. The use of such large LT motors is, however, very rare, and is generally not recommended. Since large electrical installations are normally fed from an HT network, whether it is an industry, residential housing, an office or a commercial complex, DOL switching, even when

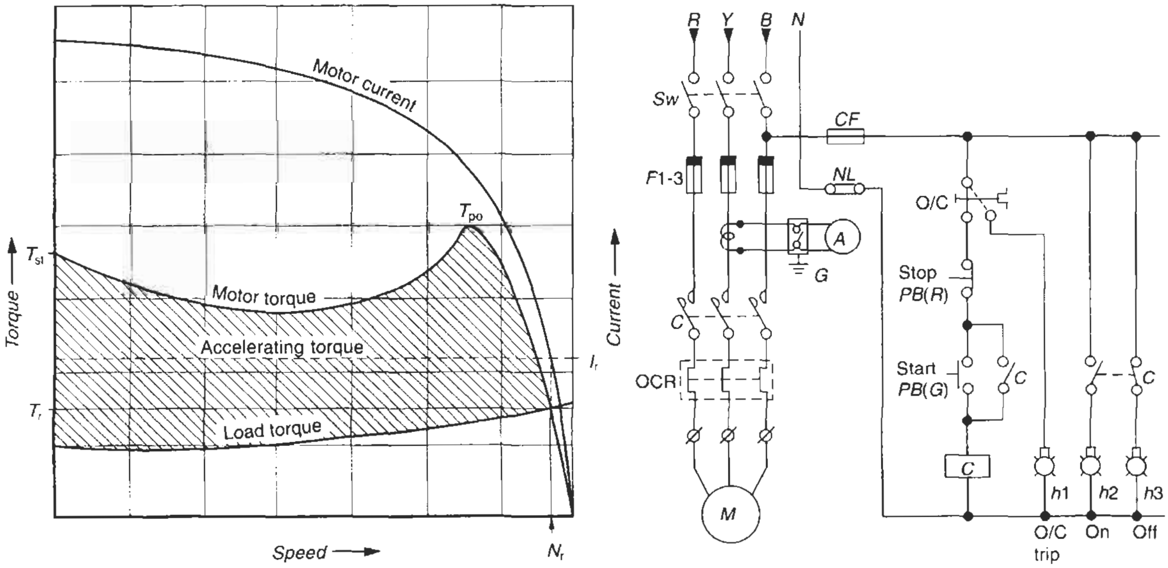

(a) Torque and current characteristics

(b) Power and control circuit diagram

Figure 4.1 Direct on-line starting

large LT motors are used, may not pose a problem or cause any significant disturbance in the HT distribution network. It is, however, advisable to employ only HT motors, in large ratings.

HT motors have little alternative to be switched other than a DOL or a soft starting. *Y/Δ* switching in an HT motor is neither advisable nor possible for its windings are normally wound in a star formation to reduce the winding's design voltage and economize on the cost of insulation. Autotransformer switching is possible, but not used, to avoid a condition of open transient during a changeover from one step to another, as discussed in Section 4.2.2(a) and for economic reasons as noted above. Moreover, on a DOL in HT, the starting inrush current is not very high as a result of low full-load current. For example, a 300 h.p. LT motor having a rated full-load current (FLC) of 415 A on a DOL will have a starting inrush of approximately 2500 A, whereas a 3.3 kV motor will have an FLC of only 45 A and starting inrush on a DOL of only 275 A or so. An HT motor of 3.3, 6.6 or 11 kV will thus create no disturbance to the HT distribution network on DOL starting.

For power and control circuit diagrams refer to Figure 4.1(b).

4.2 Reduced voltage starting

When the power distribution network is available on LT, and the motors are connected on such a system, it becomes desirable to reduce the starting inrush currents, for motors beyond a certain rating, say, 10 h.p., to avoid a large dip in the system voltage and an adverse influence on other loads connected on the same system. Sometimes it may also be a statutory requirement of the local electricity authorities for a consumer to limit the starting inrush of motor currents beyond a certain h.p. to protect the system from disturbances. This requirement can be fulfilled by adopting a reduced voltage starting.

Sometimes the load itself may call for a soft start and a smoother acceleration and a reduced voltage switching may become essential.

A few common methods to achieve a reduced voltage start are described below.

4.2.1 Star/delta (*Y/Δ*) starting

The use of this starting aims at limiting the starting inrush current, which is now only one third that of DOL starting. This is explained in Figure 4.2. This type of starting is, however, suitable for only light loads, in view of a lower torque, now developed by the motor, which is also one third that of a DOL. If load conditions are severe, it is likely that at certain points on the speed–torque curve of the motor the torque available may fall short of the load torque and the motor may stall. See the curves in Figure 4.3(a), showing the variation in current and torque in the star and delta positions and the severe reduction in the accelerating torque.

When employing such a switching method precautions should be taken or provision made in the starter to ensure that the windings are switched ON to delta only when the motor has run to almost its full speed. Otherwise it may again give almost a full kick as on a DOL and defeat the purpose of employing a star/delta switching. Figure 4.3(a) explains this.

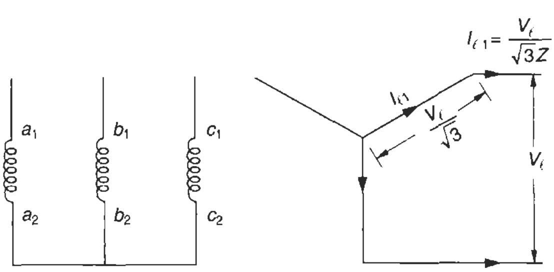

(a) Line current $I_{\ell 1}$ in case of *Y* connected windings

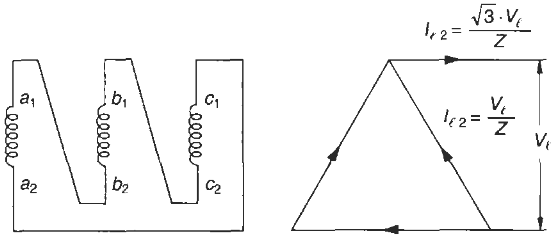

$$\frac{I_{\ell 1}}{I_{\ell 2}} = \frac{V_\ell}{\sqrt{3}Z} \cdot \frac{Z}{\sqrt{3}V_\ell}$$

$$= \frac{1}{3}$$

$$\text{or} \quad I_{\ell 1} = \frac{1}{3} I_{\ell 2}$$

(b) Line current $I_{\ell 2}$ in case of *Δ* connected windings

Figure 4.2

Limitations

1 Due to the greatly reduced starting torque of the motor, the accelerating torque also reduces even more sharply and severely (Figure 4.3(a)). Even if this reduced accelerating torque is adequate to accelerate the load, it may take far too long to attain the rated speed. It may even exceed the thermal withstand capacity of the motor and be detrimental to the life of the motor. One considers this aspect when selecting this type of switching.

To achieve the required performance, it is essential that at every point on the motor speed–torque curve the minimum available accelerating torque is 15–20% of its rated torque. In addition, the starting time must also be less than the thermal withstand time of the motor. For more details see Section 2.8.

2 This type of switching is limited to only LT system for HT motors are normally wound in star. However, in special cases, HT motors can also be designed for delta at a higher cost to the insulation system which may also call for a larger frame size. Also a provision can be made in the switching device to avoid the condition of an open transient during the changeover from *Y* to *Δ* as discussed in Section 4.2.2(b).

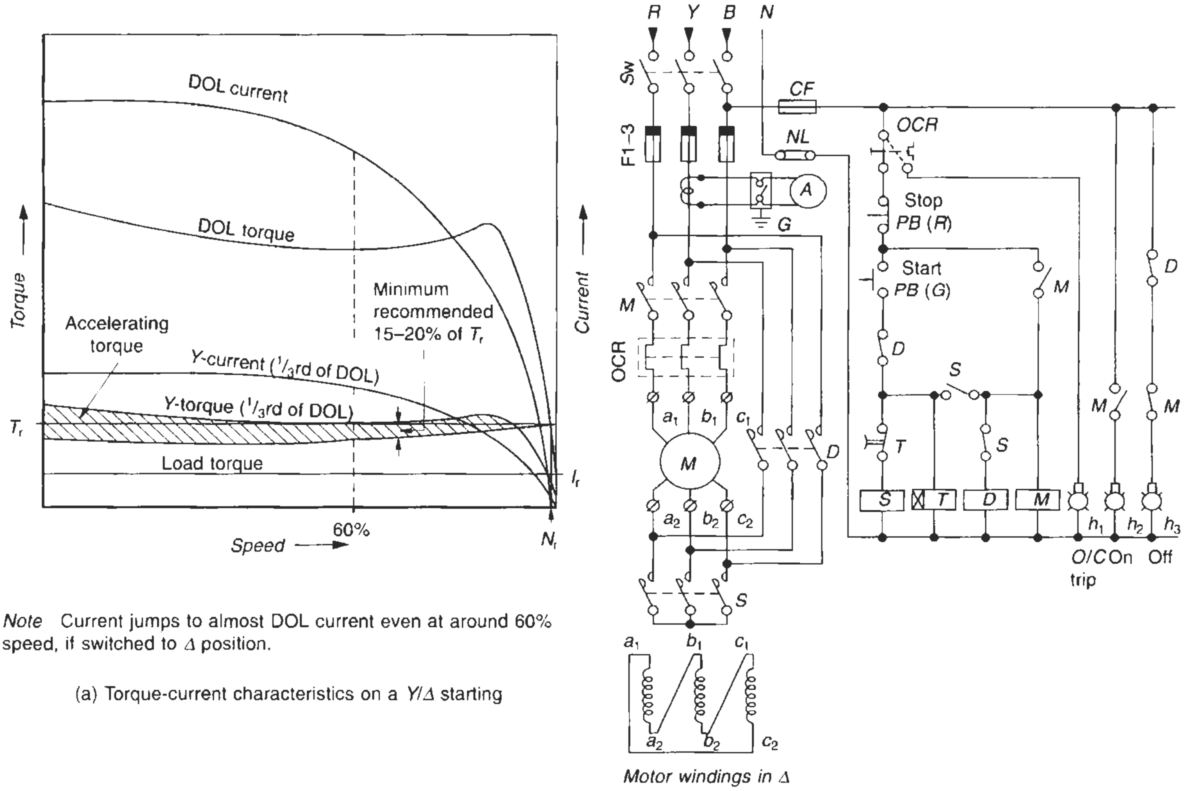

Note Current jumps to almost DOL current even at around 60% speed, if switched to Δ position.

(a) Torque-current characteristics on a Y/Δ starting

Motor windings in Δ

(b) Power and control circuit diagram

Figure 4.3 Star-delta starting

3 This type of switching requires six cable leads to the motor as against three for other types of switching to accomplish the changeover of motor windings from Y to Δ.

Ratings of contactors

Since all the contactors now fall in phase, they may be rated for the phase current only, i.e. $I_r/\sqrt{3} \simeq 58\%$ of I_r. The star contactor is in the circuit only for a short period and is generally chosen a size lower than the line and Δ contactors.

For power and control circuit diagrams refer to Figure 4.3(b).

4.2.2 Autotransformer (*A/T*) starting

For smoother acceleration and to achieve a still lower starting current than above, this type of switching, although more expensive, may be employed. In this case also the starting current and the torque are reduced in a square proportion of the tapping of the autotransformer. The normal tappings of an autotransformer are 40%, 60% and 80%. At 40% tapping the starting current and the starting torque will be only 16% that of DOL values. At 40% tapping, therefore, the switching becomes highly vulnerable as a result of greatly reduced torque and necessitates a proper selection of motor.

To determine the tapping of the autotransformer

Consider an autotransformer with a tapping at 40%. Then by equating the powers of the primary and the secondary sides of the autotransformer (Figure 4.4)

$$\sqrt{3}\cdot V_\ell\cdot I_{AT}\cdot\cos\phi=\sqrt{3}\cdot(0.4V_\ell)\cdot\sqrt{3}\cdot\frac{(0.4V_\ell)}{Z}\cdot\cos\phi$$

or $\quad I_{AT} = (0.4)^2\cdot\sqrt{3}\cdot V_\ell/Z$

while the starting current on DOL:

$$I_{DOL} = \sqrt{3}\cdot V_l/Z$$

$$\therefore\ I_{AT} = (0.4)^2\cdot I_{DOL}$$

i.e. proportional to the square of the tapping, where

I_{AT} = starting current on an autotransformer switching
I_{DOL} = starting current on a DOL switching
Z = impedance of the motor windings referred to the stator side per phase

Generalizing the above equation, autotransformer tapping for a particular starting current, I_{AT} is

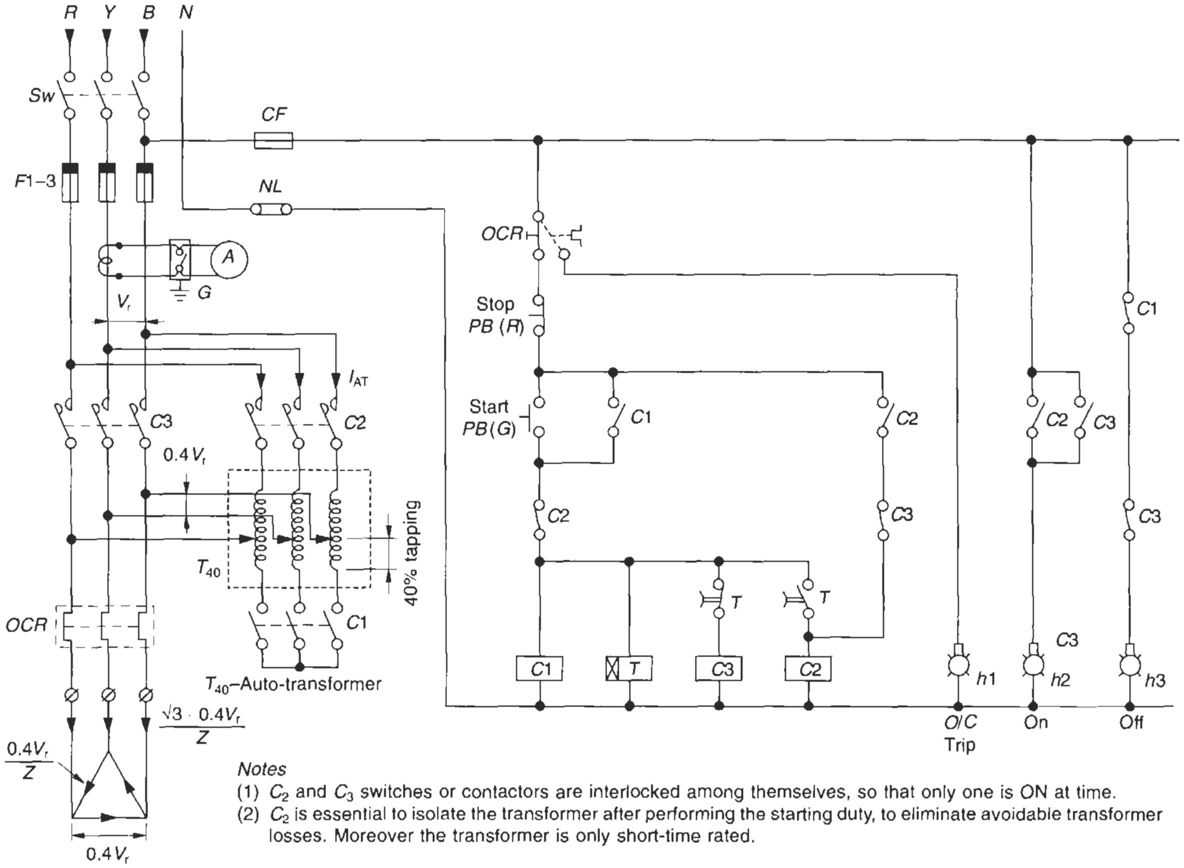

Notes
(1) C_2 and C_3 switches or contactors are interlocked among themselves, so that only one is ON at time.
(2) C_2 is essential to isolate the transformer after performing the starting duty, to eliminate avoidable transformer losses. Moreover the transformer is only short-time rated.

Figure 4.4 Auto-transformer starting (or 40% tapping)

$$\text{Tapping} = \sqrt{\frac{I_{\text{AT}}}{I_{\text{DOL}}}} \cdot 100\% \tag{4.1}$$

From this equation, the desired tapping of the auto-transformer, to limit the starting current to a desired value can be determined.

Example 4.1
A squirrel cage motor has its I_{st} on DOL as six times its rated current. Find the required tapping on an autotransformer to limit the starting current to 1.5 times.

$$\text{Tapping} = \sqrt{\frac{1.5}{6}} \times 100\%$$

or 50%

Rating of autotransformer

Since an autotransformer is in the circuit for only a short period (during the start only), it can be short-time rated. The rating of the autotransformer can be calculated from

$$\text{kVA}_{(\text{CMR})} = \sqrt{3} \cdot kV \cdot I_{\text{AT}} \tag{4.2}$$

where

kV = applied voltage, and

$\text{kVA}_{(\text{CMR})}$ = continuous rating of the autotransformer.

Since the transformer will be in the circuit for only 15 to 20 seconds, the approximate short-time rating of the transformer can be considered to be 10–15% of its continuous rating. The manufacturer of the auto transformer would be a better judge to suggest the most appropriate rating of the transformer, based on the tapping and starting period of the motor.

Rating of contactors

Star contactor C_1 and *A/T* contactor C_2 must be rated for the square of the percentage tapping. For a tapping of 80%, for instance, the rating of the contactors C_1 and C_2 will be $(0.8)^2$ or 64% of the full-load current of the motor. The main contactor C_3, however, will be rated for the full-load current.

For power and control circuit diagrams refer to Figure 4.4.

Example 4.2
For a 3.3 kV 450 kW motor, with a full-load current of 100 A and starting current on DOL as six times the rated current, the kVA rating of the transformer for 50% tapping will be

$$I_{AT} = 0.5^2 \times 100 \times 6 = 150\ \text{A from equation (4.1)}$$

$$\therefore \quad \text{kVA}_{(\text{CMR})} = \sqrt{3} \times 3.3 \times 150$$

$$\simeq 860\ \text{kVA}$$

An autotransformer of nearly 100 kVA continuously-rated should be sufficient for this application.

Note The above example is only for a general reference. The CDF of the transformer, for the short-time rating, should be increased with the starting time and the number of starts per hour. Refer to the transformer manufacturer for a more appropriate selection.

4.2.2(a) Open transient condition during a reduced-voltage switching sequence

Whenever a changeover of a switching device (contactors generally) from one condition to another takes place, as discussed above, in changing over from one tapping to another, as in an autotransformer switching, or from star to delta as in a *Y/Δ* switching, there appears a small time gap of, say, 20–80 ms before the next contactor closes, after the first has dropped. During this period, while the machine will drop its speed only very marginally, and which may not influence the load, the power from across the motor terminals will cease for this duration (except its own induced e.m.f.). This time gap, when switching HT motors particularly, may cause switching transients and prove disastrous for the motor windings, as discussed in Section 17.7.2. This is termed an open transient condition. The situation is aggravated further because of the motor's own induced e.m.f., which may fall phase apart with the applied voltage and magnify the voltage transients, in addition to causing current transients. The current transients may far exceed even 14–20 times the rated current of the motor, as illustrated in Figure 4.5, depending upon the transient recovery voltage (TRV) (Section 17.6.2). We will describe the effect of an open transient condition on an LT and HT machine separately.

1 **LT motors** In LT motors, such a situation may not be a matter of concern as no switching surges would generally occur. The voltage would be too low to cause a re-strike between the interrupting contacts of the contactors (Section 17.7.6) and cause surges. The motor's own induced e.m.f. may, however, fall phase apart with the applied voltage and the voltage across the motor windings may double. In all likelihood the windings of a motor would be suitable to withstand effect of the same (Table 11.4). In locations, however, that are humid or chemically contaminated, or where the motor is likely to be switched on after long gaps, it is possible that the windings may have attained a low dielectric strength to withstand a voltage up to twice the rated one. Open transient conditions must be avoided in all such cases.
2 **HT Motors** *Y/Δ* switching in HT motors is rare, while an *A/T* switching may become necessary when the capacity of the feeding transformer is not adequate to withstand the start-up inrush of DOL switching, or when the drive calls for a frequent switching, such as in a large compressor or pump house, and the feeding transformer is not adequate for such a duty, or when a number of large drives are to be switched in quick succession and the feeding transformer may not be adequate to sustain such heavy inrush currents.

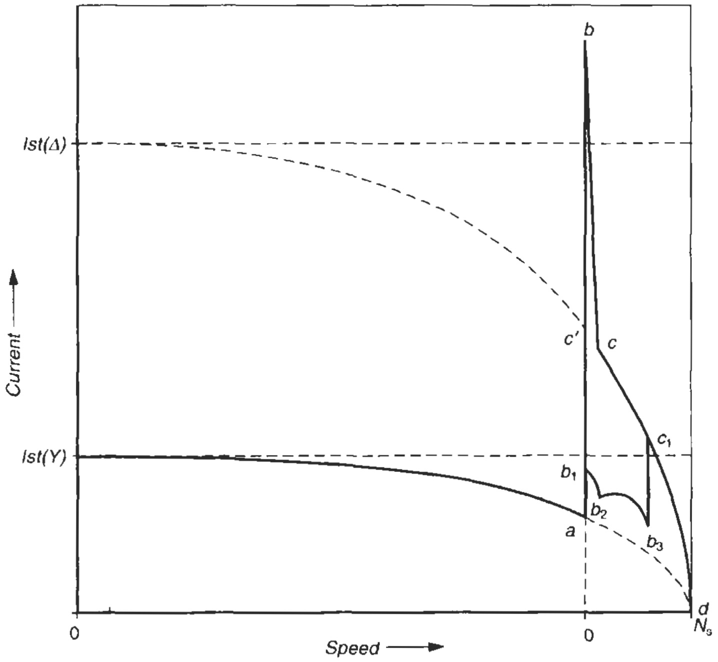

Note
ob = Peak up to twice ($\simeq 14I_r$) the actual $I(\Delta)$ current *oc'* (it may even exceed 14–$20I_r$)
ob_1 = No current transient during a closed transient switching
$c'c \simeq$ 1 to 2 ms. (opening + closing time of *Y* and *Δ* contactors respectively)

Explanation:

A. (i) *ob* is the current transient during changeover from *Y* to *Δ* in an open transient condition.
   (ii) Voltage transient across the windings: 2.45 to $4.1 V_r$

B. Sequence of a closed transient changeover,
   (i) When the bridging resistor is introduced in parallel to *Y* windings at point, *a*, the total impedance of the windings gets reduced and current has small overshoot to ob_1 compared to its normal current, *oa*.
   (ii) There is no voltage transient now and the voltage across the windings remains at V_r.
   (iii) The *Y* contactor drops at b_1, the impedance of the windings becomes high, current drops to b_2.
   (iv) The bridging resistor drops at *b*3 and the motor current traces back its normal *Δ* current curve c_1d.

Figure 4.5 Open and closed transient conditions in *Y/Δ* switching

However, unlike an LT distribution system, which may impose a limitation while switching large motors on DOL, the HT feeding lines in all probability may not pose any such limitation, as it may be feeding many more loads and may already be of a sufficient capacity. In HT systems an open transient condition may lead to severe voltage transients, which may prove disastrous for the motor windings. All motors that are switched A/T are therefore recommended to have a surge suppressor on each interrupting pole as noted in Section 18.8 which will take care of these surges. Precautions such as adopting a closed transient switching method noted below will be essential where surge suppressors are not provided.

4.2.2(b) Closed transient switching

1 **In a *Y/Δ* starter** When desired, the above situation can be averted by inserting a bridging resistor in the motor windings through an additional contactor, which can be called a transition contactor, C. A typical power and control scheme is shown in Figure 4.6 for a *Y/Δ* switching. This contactor is energized through a timer, T_1, just before the desired time of changeover (before the *Y* contactor opens) and energizes the auxiliary contactor, *d*, which de-energizes the *Y* contactor *S* through its *NC* contact and energizes the *Δ* timer, T_2. Timer T_2 energizes the *Δ* contactor *D*, thus bridging the time of the second contactor and eliminating the condition of an open transient. In fact, the use of timer T_2 becomes redundant with the introduction of the auxiliary contactor, *d*, which introduces the required delay (by its closing time) to close the *Δ* contactor *D*. It is, however, provided to allow only for an additional delay. The time of this timer, when provided, may be set low to account only for the transient time. As soon as the changeover is complete, the resistor contactor, *C*, drops through the *NC* contact of *D*.

The scheme is termed a closed transient switching. A comparison of the two methods in terms of voltage transients and current overshoots is given in Table 4.1.

2 **In an *A/T* starter** The same logic can be applied as discussed above. The star point of the *A/T* is opened and connected through the main contactor C_3 to provide a near replica to a *Y/Δ* switching. Figure 4.7 illustrates the revised scheme.

Pressing the start P.B. will energize the auxiliary contactor *d* and timer *T*. The star contactor C_1 is switched on and energizes the *A/T* contactor C_2 at the desired tapping. The motor starts at the required

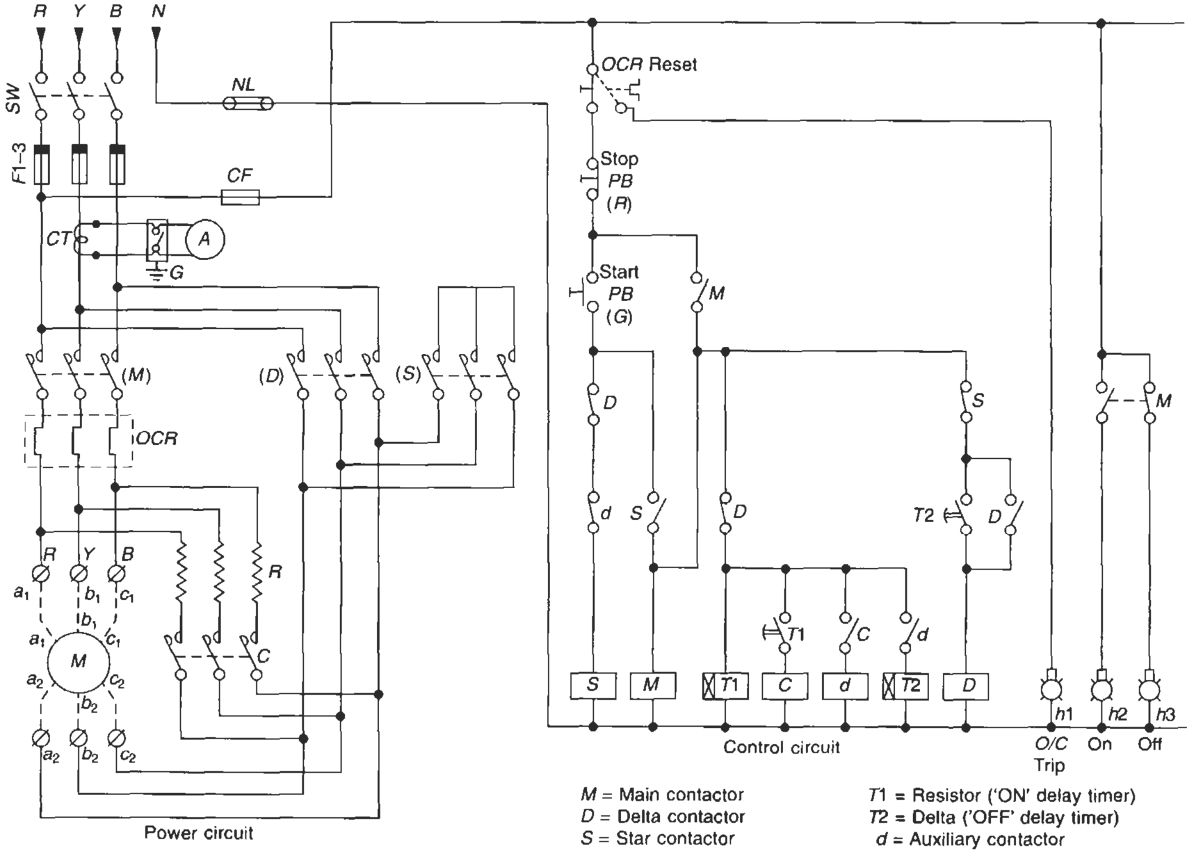

M = Main contactor
D = Delta contactor
S = Star contactor
C = Resistor contactor
T1 = Resistor ('ON' delay timer)
T2 = Delta ('OFF' delay timer)
d = Auxiliary contactor

Figure 4.6 Circuit diagram for a closed transient *Y/Δ* switching

Table 4.1 Comparison between an open and a closed transient switching in terms of voltage and current

Serial no.	*Condition*	*Open transient*	*Closed transient*
1	Voltage transient across the motor windings	Up to 3 to 5 p.u. i.e. 3 to 5 $\left(\frac{\sqrt{2}}{\sqrt{3}}\cdot V_r\right)$ or 2.45 to 4.1V_r Section 17.7.2	There is no voltage transient. The voltage across the motor windings remain at 'V_r'
2	Current overshoot during changeover from *Y* to *Δ*, point, *a*, on *Y* current curve (Figure 4.5)	The current curve becomes *a b c d* (Figure 4.5) and current overshoots from *oa* to *ob* momentarily, which may exceed 14–20I_r	The current curve becomes $ab_1b_2b_3c_1d$ (Figure 4.5). There is no current overshoot beyond the normal current in *Δ*

Note Since the surge impedance of a circuit is normally very high, as noted in Section 17.8, it is the voltage transient that is the cause of concern in the above case than the current transient.

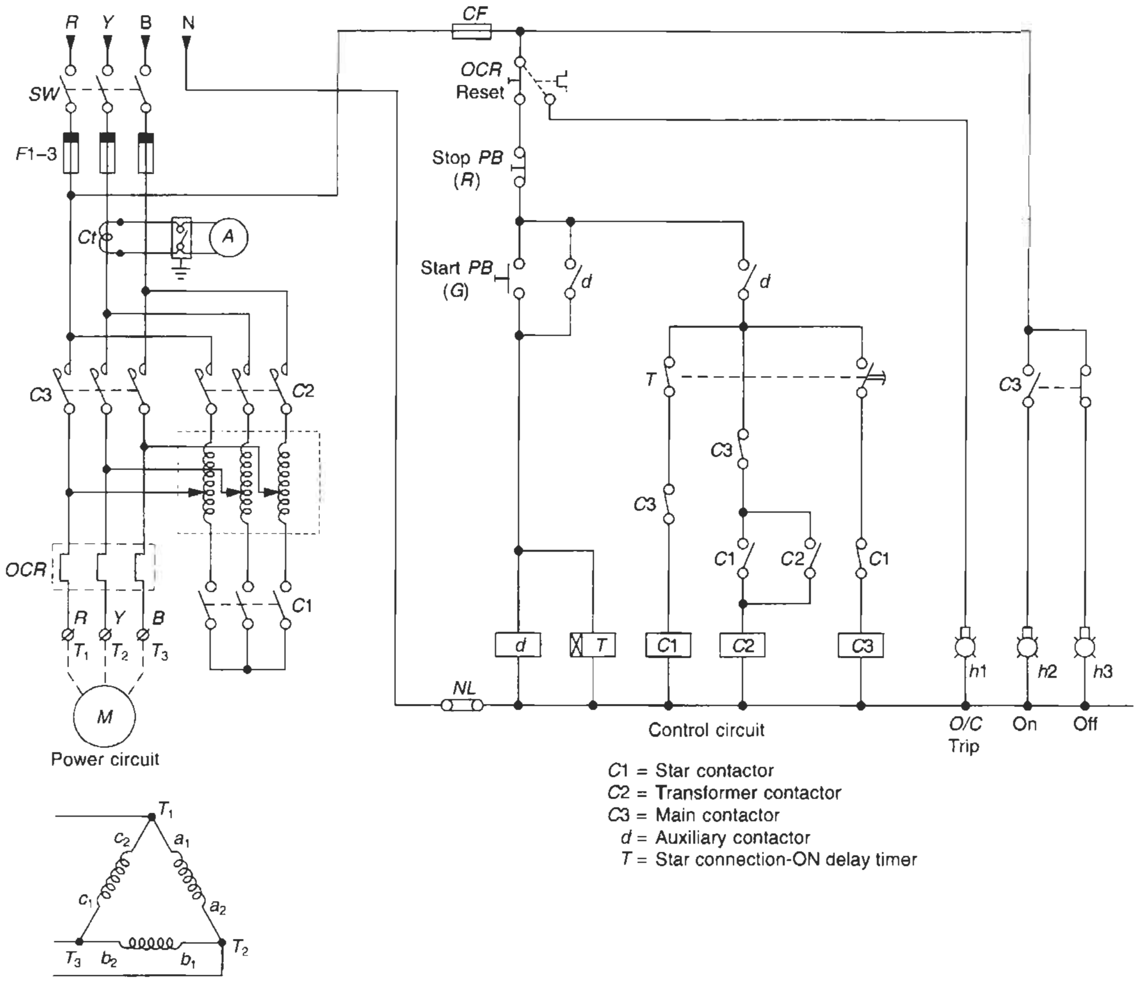

C1 = Star contactor
C2 = Transformer contactor
C3 = Main contactor
d = Auxiliary contactor
T = Star connection-ON delay timer

Figure 4.7 Circuit diagram for a closed transition *A/T* switching

reduced voltage. After the preset time of timer *T* the star contactor C_1 falls out. The motor is still energized through the transformer winding without any interruption during the changeover. The main contactor C_3 now energizes and the motor runs at full voltage. The *A/T* contactor C_2 also falls out thus achieving a closed transient switching sequence.

4.2.3 Soft starting

Soft starting minimizes the starting mechanical and thermal stresses/shocks on the machine and the motor. It results in reduced maintenance cost, fewer breakdowns and hence longer operating life for both. Reduced starting current is an added advantage.

Through semiconductor devices (static drives)

In a solid-state static switching device the voltage can be varied smoothly to any required value from high to low or low to high without creating a condition of open transient. For HT motors particularly and large LT motors generally, it provides a more recommended alternative over an autotransformer or a *Y*/*Δ* starting. For details see Section 6.16.1.

Through static electrodes liquid electrolyte or chemical resistance starting

This is a primary resistance starting and has a well-proven French technology for soft starting of all types of induction motors. The device works on the principle of a decrease in resistance of an electrolyte (chemical) having a negative temperature coefficient. The passing of the starting current through the electrolyte raises its temperature inside a static electrode chamber. The rise in temperature of the electrolyte decreases its own resistance progressively. This device thus provides a natural variable resistance during the start-up period and hence the desired variable resistance control. The resistance of the electrolyte varies smoothly, and helps to start up the motor smoothly.

The electrolyte normally consists of sodium-based salts mixed with distilled, de-mineralized (DM) or soft drinking water. These salts are neutral and non-corrosive and remain stable throughout the life of the electrodes, which can be many years. Evaporation and outside contamination are minimized by providing anti-evaporation/sealant oil. The electrolyte is filled in separate tanks for each phase, each with two electrodes (Figure 4.11 below). These electrolytic resistances are used in series with the motor's stator windings. During the start-up period, the current passes through them and causes a voltage drop, which allows a reduced voltage to the motor's stator windings. The current through the electrolyte causes its temperature to rise and resistance to drop, and thus reduces the voltage drop. Gradually the voltage applied to the stator windings builds up until it almost reaches the rated voltage. At this stage the residual electrolyte can be totally cut off from the circuit with the help of a shorting contactor. A timer can also be introduced in to the electrolyte circuit to automatically cut off the electrolyte circuit after a pre-set starting time.

Starting characteristics

With this type of switching we can also obtain similar speed–torque or speed–current characteristics as with reduced-voltage starting, in a star-delta or an autotransformer starting. Since the variation in the resistance of the electrolyte with the starting heat, is very smooth, as shown in Figure 4.8, the speed–torque and speed–current characteristics are also very smooth. The characteristics are now without any torque, current or voltage spikes, unlike in *Y*/*Δ* or autotransformer startings. The *Y*/*Δ* or *A*/*T* startings exert voltage and current transients on the drive during the changeover sequence from star to delta or from one tapping to the other as noted in Table 4.1. It also eliminates the changeover open transient condition.

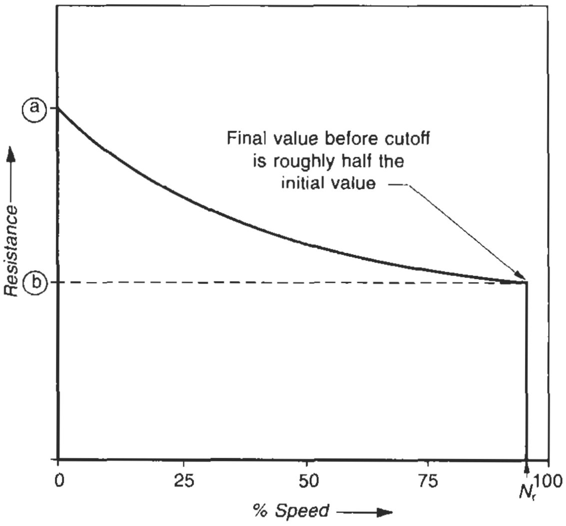

Variation in stator resistance during starting

ⓐ Initial resistance

ⓑ Resistance at short-circuiting

Figure 4.8 Variation in electrolyte resistance with speed

Figure 4.9 illustrates transient-free switching through such electrolyte starters. This is a definite advantage of electrolytic switching over conventional *Y*/*Δ* or autotransformer switching.

Important features of electrolyte switchings

1 They have in-built safety features to prevent excessive frequent starting, by means of thermostats and low-level electrolyte monitors

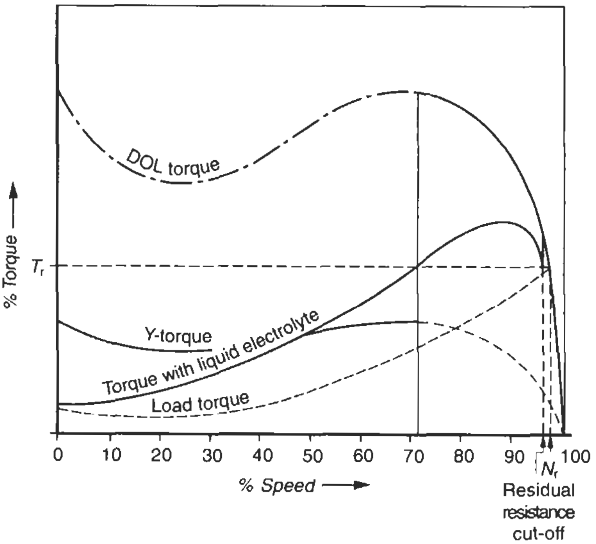

Figure 4.9 Smooth acceleration through liquid electrolyte starters

2 It is important to maintain the level of the electrolyte to retain the desired characteristics on a repeat start. However, this may be necessary only once a year as a result of very little evaporation. In the event of a lower level the electrolyte can be filled up with drinking water, as in a car battery.

3 This type of switching provides very smooth acceleration. This is an advantage of electrolyte switchings over other conventional types of switchings. It exerts no kicks and calls for no special coupling arrangement to transmit the power smoothly to the drive if the requirement of the drive is to be precise and to have a smoother acceleration.

4 Since the starting characteristics will depend upon the initial resistance of the electrolyte, the concentration of electrolyte and the active area of the electrode must be determined beforehand for a particular type of drive, and the requirements of starting torque and current. Small adjustments at site are, however, possible by varying the depth of electrodes, adjusting the active area of the electrode, repositioning the flanges and changing the concentration of the electrolyte etc.

5 Electrode assembly – a general arrangement of an electrode assembly is shown in Figure 4.10. The value of the resistance is preset at the works, according to load requirements, starting current, torque limitation, starting time etc. Small adjustments are possible at site as noted above.

6 The electrolytes are non-corrosive and the electrodes do not corrode with time. This feature is of special significance when compared with an ordinary liquid resistance starter used commonly for slip-ring motors.

7 Electrolytes do not deteriorate and therefore do not require replacement. The evaporated liquid can be replenished with drinking water when the level of the electrolyte falls as a result of evaporation. In Europe such starters have been used for over 15–20 years.

8 Electrolyte switching is a costlier proposition compared to direct on-line or star/delta switching due to additional shorting contactor and timer, and the cost of electrolyte, its tank and thermostatic control etc. The cost may, however, be comparable with autotransformer switching.

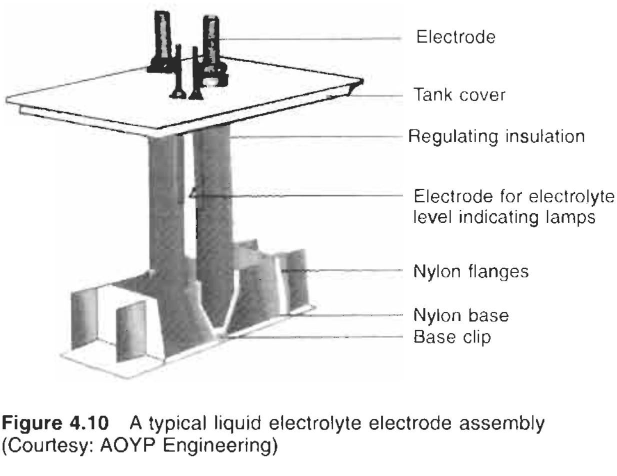

Figure 4.10 A typical liquid electrolyte electrode assembly (Courtesy: AOYP Engineering)

Application, ratings and sizes

Electrolyte switchings are simple in construction and possess high thermal capacity. They are ideally suited for difficult starting duties and remotely located plants, where expert services, such as are required for static drives, are not easily available. These starters are not bulky and rating is no bar. The common range is from 1 h.p. to 1000 h.p. for LT as well as HT squirrel cage motors (Figure 4.11).

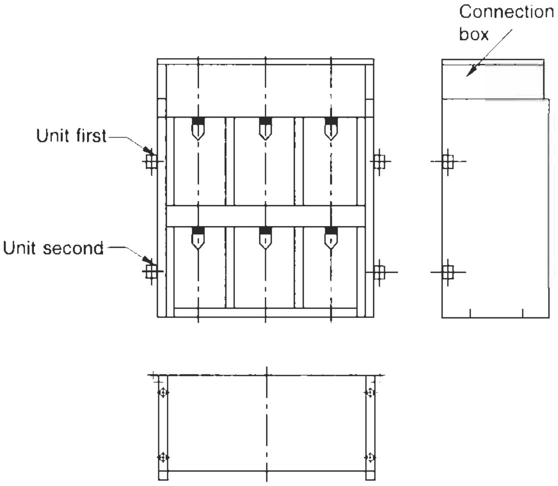

Note One single unit is normally designed for 10 to 40 H.P.

(a) Typical arrangement of two electrolyte units being used in parallel one above the other

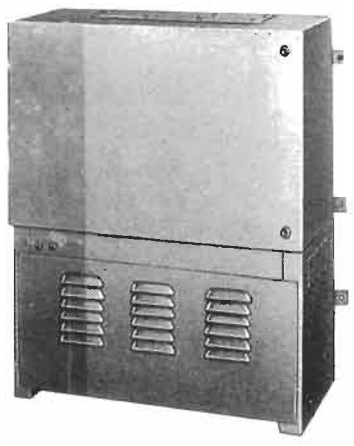

(b) Overview of the starter

Figure 4.11 Electrolyte starter

Relevant Standards

IEC	*Title*	*IS*	*BS*
60076-1/1993	Power transformers – General Specification for tapping and connections	2026-1/1991	BS EN 60076-1/1997

Notes

1 In the tables of relevant Standards in this book while the latest editions of the standards are provided, it is possible that revised editions have become available. With the advances of technology and/or its application, the updating of standards is a continuous process by different standards organizations. It is therefore advisable that for more authentic references, readers should consult the relevant organizations for the latest version of a standard.

2 Some of the BS or IS standards mentioned against IEC may not be identical.

3 The year noted against each standard may also refer to the year of its last amendment and not necessarily the year of publication.

List of formulae used

$$\text{Tapping of autotransformer} = \sqrt{\frac{I_{\text{AT}}}{I_{\text{DOL}}}} \cdot 100\% \qquad (4.1)$$

I_{AT} = starting current on an autotransformer switching
I_{DOL} = starting current on a DOL switching

Rating of autotransformer

$$\text{kVA}_{(\text{CMR})} = \sqrt{3} \cdot \text{kV} \cdot I_{\text{AT}} \qquad (4.2)$$

kV = applied voltage
$\text{kVA}_{(\text{CMR})}$ = continuous rating of the autotransformer

Further reading

Byatt, J.R., *Selection of Primary Starters for Cage Motors and Secondary Starters for Slip-ring Motors,* AOIP Electrical, UK.

Kajiji, Y.H., *Liquid Resistance Starting,* AOYP Engineering Co. (P) Ltd, Mumbai, India.

Werninck, E.H. (ed.), *Electric Motor Hand Book.*

5

Starting and Control of Slip-ring Induction Motors

Contents

The use of wound motors is on the wane, for reasons of inherent advantages of a squirrel cage motor over a wound motor and the availability of static drives (Chapter 6) which can make a squirrel cage motor perform the same duties as a wound motor and even better. Nevertheless, the use of wound motors exists and will continue worldwide for years. Where slip-ring motors are employed whose only purpose is starting or a limited speed control the resistance or electrolyte method of starting has been most commonly adopted, for reasons of cost. Static drives generate harmonics and distort the supply voltage, and call for larger sizes of cables. It is also cumbersome and cost-inhibiting to provide filter circuits, particularly when the installation is small.

But where accurate speed control is the process requirement, static controllers, termed 'slip recovery systems' (Section 6.16.3) are recommended, which in addition to exercising extremely accurate speed control, also conserve slip losses. Static drives are discussed in Chapter 6. Below we will describe a procedure to determine the value of resistance, its steps and switching and control schemes for these steps for a rotor resistance starter.

An electrolyte starter is almost a standard product like a motor and the manufacturer, depending upon the number of starts and the speed control requirement, can adjust the quantity of electrolyte, depth of electrodes etc.

5.1 Important features of a slip-ring motor

These motors are switched through their rotor circuit by inserting suitable resistances and then removing them gradually. In view of their varying characteristics through their rotor circuit, they can provide the following features:

1. The external resistance adds up to the total impedance of the motor windings and limits the starting current. It also improves the starting power factor.
2. Since the performance of an induction motor can be varied by altering the rotor parameters, a slip-ring motor, through its rotor circuit, can be made to suit any specific torque and speed requirement.
3. The speed of a slip-ring motor can be varied through an external resistance. Therefore the torque can be maintained at any value up to the pull-out torque in the entire speed range by suitably varying the external resistance. (See circle diagram in Figure 1.16 and Section 1.10.2). At lower speeds, however, the efficiency of the motor will be poor, as the output is proportional to the speed. The efficiency would be roughly in the ratio of the two speeds, i.e.

   $$\frac{\eta_2}{\eta_1} = \frac{N_{r2}}{N_{r1}}$$

   In fact, it would be even worse as a result of the equally reduced cooling effect of the fan at lower speeds. Since $kW \propto Nr \cdot T$, kW would vary with speed, the torque remaining almost the same throughout the speed range. The motor would draw the same power from the supply as before, which, proportional to speed variation, would appear as slip loss in the rotor circuit. For instance, at 25% slip, the power output will be 75% minus the cooling effect and this 25% will appear as a slip loss in the rotor circuit.
4. Restriction in starting current and a requirement for high starting torque to accelerate heavy rotating masses sometimes limit the use of a squirrel cage motor. For such applications a slip-ring motor provides a better alternative.
5. As discussed in Section 2.7.1, during start-up, the rotor is more vulnerable to damage due to excessive heat in the rotor compared to the stator. But in slip-ring motors a major portion of this heat is shared by the external resistance, in proportion to its resistive value. Therefore, a slip-ring motor can be switched ON and OFF more frequently, compared to a squirrel cage motor. It can also withstand a prolonged starting time, while accelerating heavy loads. Now the external resistance will have to be suitable for such duty/load requirements.

Slip loss

From equation (1.9), slip loss = $S \cdot P_s$. If the full-load slip is S and the speed varied to slip S_1 the additional slip loss due to the increased slip

$$= P_s(S_1 - S)$$

$$\simeq \text{kW } (S_1 - S) \text{ (ignoring rotor losses).}$$

Example 5.1

If the speed of a 125 kW, 1480 r.p.m. motor is varied at constant torque to 750 r.p.m., then the additional slip loss

$$\simeq 125 \times (0.50 - 0.0133)$$

$$\simeq 125 \times 0.4867$$

or 61 kW

where $S = \dfrac{1500 - 1480}{1500} = 0.0133$ and $S_1 = 0.5$

Disadvantages

A slip-ring motor is expensive, as are its controls, compared to a squirrel cage motor. It also requires meticulous and periodic maintenance of the brushes, brush gear, slip-rings, external rotor resistances etc. A squirrel cage motor is thus preferred to a slip-ring motor. A slip-ring motor also requires a larger space for the motor and its controls.

5.2 Starting of slip-ring motors

These can be started by adopting either a 'current limiting' method or a 'definite time control' method. In a current limiting method the closing of contactors at each step is governed by the current limiting relays which permit the accelerating contactor of each step to close when the motor current has fallen from its first peak value to the second pre-set lower value. The relays determine the closing time by sensing the motor data between each step and close only when the current has fallen to a predetermined value of the current relays. The closing sequence is automatic and adjusts against varying loads.

The starting time may be shorter or longer depending upon the load. The disadvantage is that if for any reason, say, as a result of excessive load due to friction or momentary obstructions if the motor takes a longer time to pick up, the second contactor will not close until the motor has picked up to a certain speed, and may thus create a false stalling condition and allow persistence of a higher starting current. In a 'definite time' start the other contactor will close after a pre-set definite time, cutting a piece of external resistance and hence increasing the torque, giving the motor a chance to pick up. Thus, only this method is normally employed for modern slip-ring motor starts and controls. Below we will describe only with this type of control.

5.2.1 Selection of rotor resistance

The choice of the external resistance to be introduced in the rotor circuit during start-up will depend upon the torque requirement or limitation in the stator current, without jeopardizing the minimum torque requirement. Since T_{st} and I_{st} are interrelated (Section 2.4) limitation in one will determine the magnitude of the other. Making use of the circle diagram or the torque and current curves available from the motor manufacturer, the value of the stator current corresponding to a particular torque and vice versa can be determined. The slip at which this torque will occur on its operating region can also be found from these curves (Figure 5.1). For this stator current, the corresponding rotor current can be ascertained and the rotor circuit resistance calculated to obtain this current.

If stator full load current = I_r
Corresponding rotor current $RA = I_{rr}$

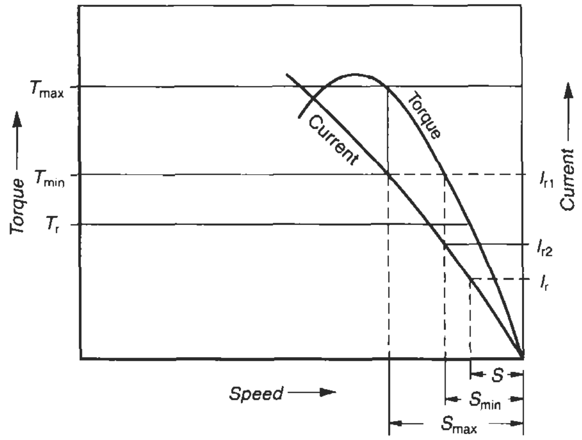

Figure 5.1 Operating region of torque and current curves

Rotor standstill voltage = ${}_{ss}e_2$
Rotor voltage at a particular speed = $RV = S \cdot {}_{ss}e_2$

Then, for a stator current of I_{r1}, corresponding to a starting torque of T_{max}, the required rotor current will be

$$I_{rr1} = \frac{I_{r1}}{I_r} \cdot I_{rr}$$

To obtain this rotor current, the required rotor circuit resistance can be calculated as below for the various configurations of the rotor windings and the resistance units. It may be noted that, when the resistance configuration is not the same as that of the rotor, it must

Sl. no.	Rotor configuration	External resistance			Total rotor circuit resistance	
		Configuration	Figure	Equivalent configurations of the rotor		
1	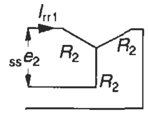	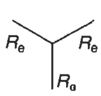	5.2(a)	—	$R_{21} = R_2 + R_e = \frac{{}_{ss}e_2}{\sqrt{3} \cdot I_{rr1}}$	(5.1a)
2	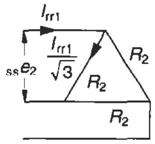	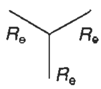	5.2(b)	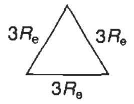	$R_{21} = R_2 + 3R_e = \frac{\sqrt{3}\,{}_{ss}e_2}{I_{rr1}}$	(5.1b)
3	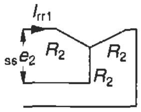	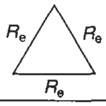	5.2(c)	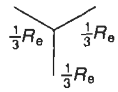	$R_{21} = R_2 + \frac{1}{3}R_e = \frac{{}_{ss}e_2}{\sqrt{3} \cdot I_{rr1}}$	(5.1c)
4	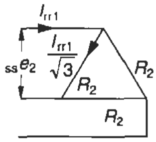	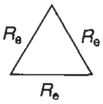	5.2(d)	—	$R_{21} = R_2 + R_e = \frac{\sqrt{3} \cdot {}_{ss}e_2}{I_{rr1}}$	(5.1d)

Where, rotor resistance = R_2 Ω/phase; External resistance = R_e Ω/phase; Total rotor circuit resistance = R_{21} Ω/phase

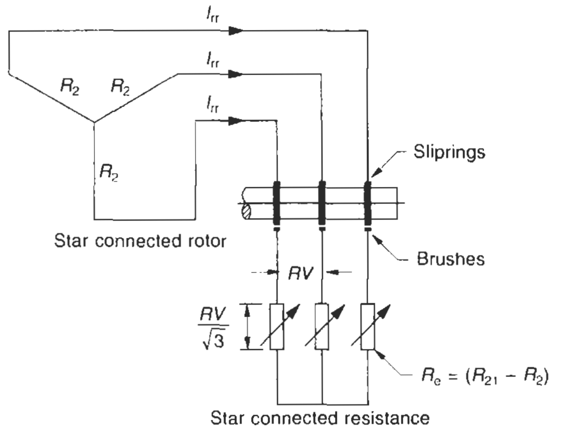

Figure 5.2(a) External rotor resistance

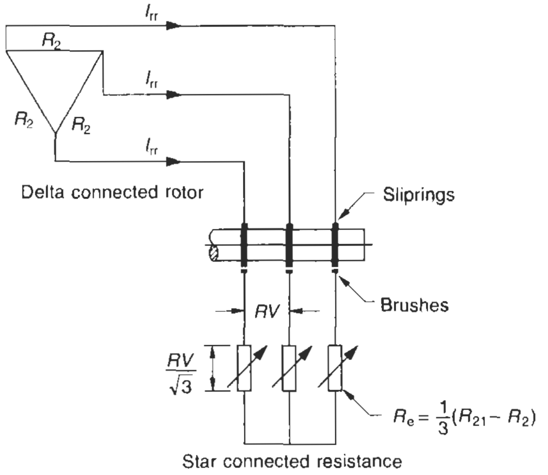

Figure 5.2(b) External rotor resistance

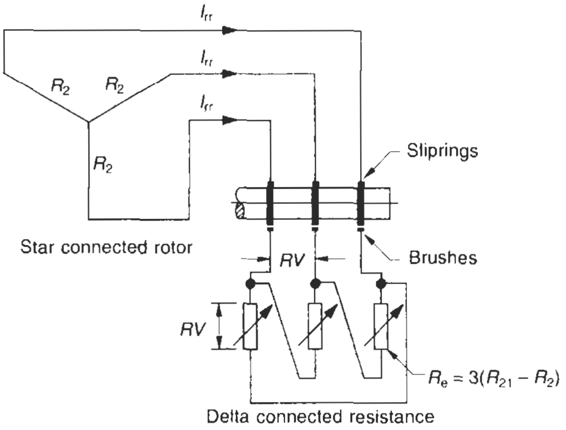

Figure 5.2(c) External rotor resistance

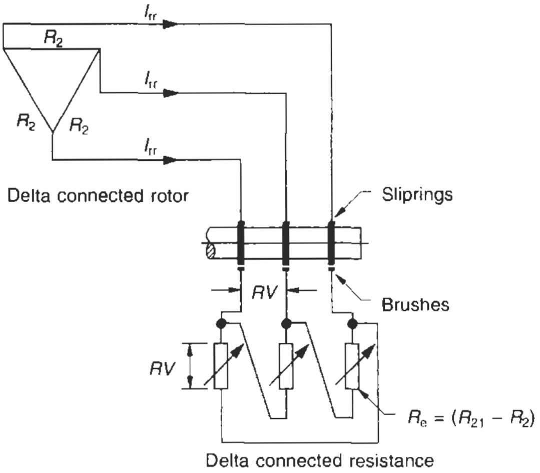

Figure 5.2(d) External rotor resistance

first be converted to the equivalent configuration of the rotor (see Example 23.4 in Chapter 23 for conversion) to facilitate calculations.

Notes

1 Normally the external resistances are connected in star. But for larger motors, calling for high resistance grids, they may also be connected in delta, to reduce their current rating and hence the cost. Insulation is not a limiting factor usually, in case of resistance grids.

2 The rotor voltage, $_{ss}e_2$ refers to the standstill secondary induced e.m.f., between the slip-rings. Whereas the rotor current, I_{rr1} refers to the full load rotor current, when the slip-rings are short-circuited.

Refer to Figure 5.3(a) for a typical cast iron and Figure 5.3(b) for a stainless steel resistance grid used for such purposes. Cast iron grids are, however, not preferred due to their resistance change with temperature, which may alter the predefined performance of the motor for which the resistance was designed, particularly when the resistance is used to effect speed variation. Cast iron grids are also brittle and may break during transportation, installation or maintenance. They may also not be able to absorb shocks and vibrations during normal service.

The stainless steel punched grids, generally alloys of aluminium and chromium, are normally preferred. Figure 5.3(c) shows an Al–Cr alloy steel punched grid resistance in a multi-tier arrangement. They are unbreakable, on the one hand, and possess a high specific resistance (about 120 $\mu\Omega$–cm), on the other. A high specific resistance helps in saving the material required to make the grid of a particular resistance value.

More importantly, such alloys also possess a very low temperature coefficient of electrical resistance (of the order of 220 $\mu\Omega/\Omega/°C$, typical), which causes only a marginal change in its resistance value with variation in temperature. They can therefore ensure a near-consistent predefined performance of the motor for which the resistance grid is designed, even after frequent starts and stops. They are also capable of absorbing shocks and vibrations during stringent service conditions and are therefore suitable for heavy-duty drives, such as steel mill applications.

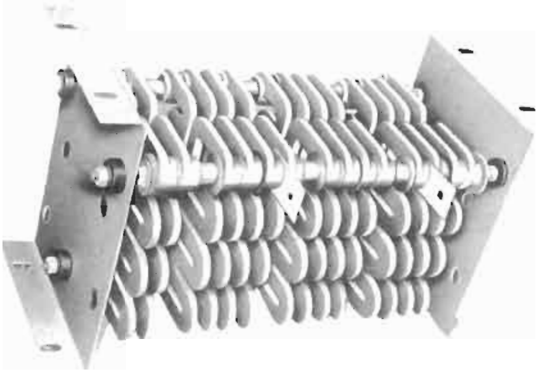

Made of
1. tough iron casting free from brittleness or
2. stainless steel or
3. aluminium chromium corrosion and vibration resistant

Possesses high specific resistance ≃ 120 μΩ–cm and low temperature coefficient of 0.00022 Ω/Ω/°C. Causes negligible change from start to run and therefore provides a fairly accurate speed control

Figure 5.3(a) Cast iron grid resistance (Courtesy: BCH)

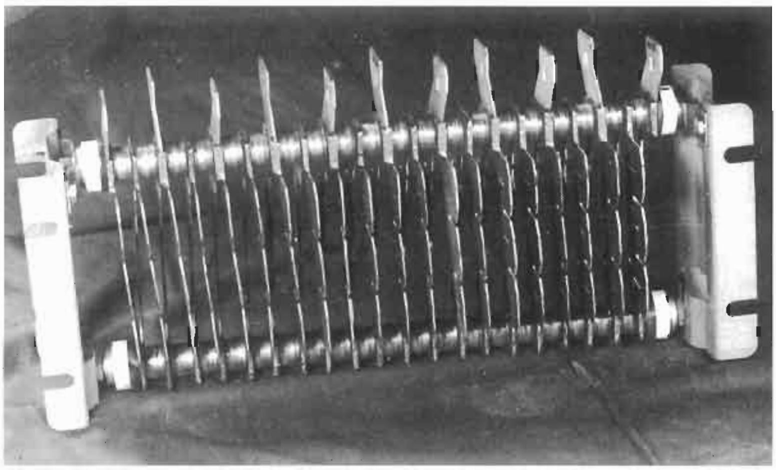

Figure 5.3(b) Stainless steel punched grid resistance (Courtesy: BCH)

Figure 5.3(c) Al–Cr alloy steel punched grid resistor in multitier arrangement (Courtesy: BCH)

Example 5.2

A 125 kW, 415 V, 3ϕ wound rotor has the following parameters:

$I_r = 230$ A

$_{ss}e_2 = 500$ V

$I_{rr} = 180$ A

$T_{po} = 250\%$

$R_2 = 0.09$ ohm (star connected)

The torque and current curves are as shown in Figure 5.4. Determine the external resistance required to achieve a starting torque of 200%.

Solution

From these curves, for a torque of 200% the stator current should be 250%, i.e. 230 × 2.5 A.

∴ Corresponding rotor current,

$$I_{rr1} = \frac{180}{230} \times 230 \times 2.5 \text{ A}$$

$$= 180 \times 2.5 \text{ A}$$

and rotor circuit resistance, with a star-connected resistance unit.

$$R_{21} = \frac{500}{\sqrt{3} \times 180 \times 2.5}$$

$$= 0.641 \ \Omega$$

∴ External resistance required, $R_e = 0.641 - 0.09$

$= 0.551 \ \Omega$ per phase

Method of cutting off the external resistance

The simplest method is performing it manually. Once the total external resistance is known, the resistance unit can be built with a hand-operated mechanism to manually cut-off the external resistance. However, this method is suitable only for applications where the magnitude of torque during the pick-up period (torque at different speeds) is of little consequence. In such starters, there is no control over the time of start or resistance in the circuit (torque at different speeds) during the start-up period. Liquid rotor starters are one type and are suitable only for light duties. For heavy loads, requiring specific torque values during pick-up, specific resistances must be introduced into the rotor circuit at specific speeds. The specific resistances so required can be determined as discussed below and manufactured in the form of a grid. These resistance grids are then controlled through contactors and timers. The duration between each step of the resistance grid is pre-determined, the torque demand is already ascertained and the resistance required at each step is pre-calculated. The starter can then be made pushbutton-operated fully automatic. With the help of pre-set timers at each step, the entire resistance is cut off gradually and automatically, maintaining the pre-determined torque profile.

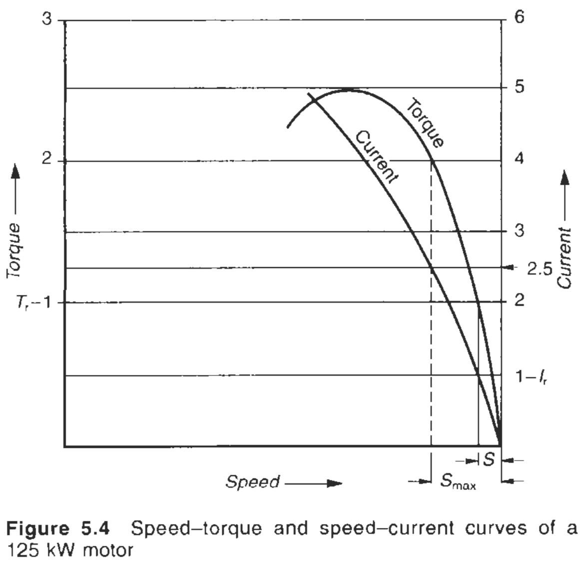

Figure 5.4 Speed–torque and speed–current curves of a 125 kW motor

5.2.2 Determining external resistance and time of start

Consider Figure 5.5 with six steps (rotor resistance unit with five steps) and assume the maximum and minimum torques as T_{max} and T_{min} between each step, to suit a particular load demand (Figure 5.6(a)). Let the corresponding rotor currents be I_{max} and I_{min}. Then by a simple hypothesis using equation (1.7),

$$I_{max} = \frac{_{ss}e_2}{\sqrt{(R_{21}/S_1)^2 + {_{ss}X_2^2}}} = \frac{_{ss}e_2}{\sqrt{(R_{22}/S_2)^2 + {_{ss}X_2^2}}} \text{ etc.}$$

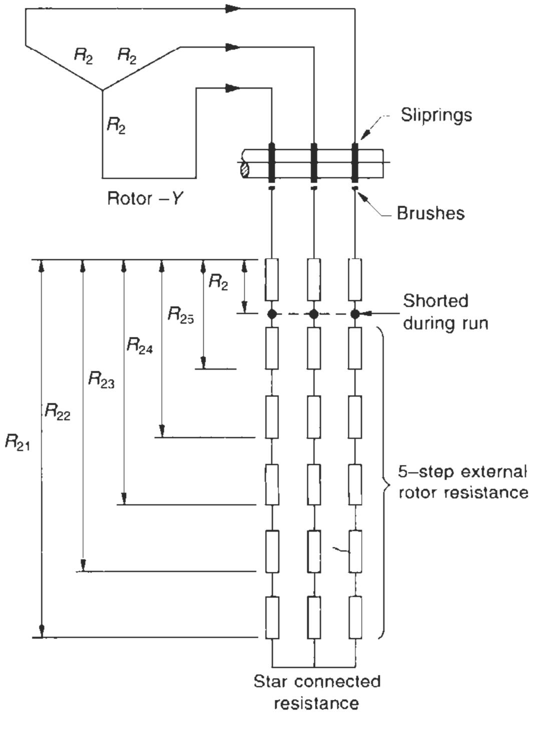

Figure 5.5 Five-step rotor resistance

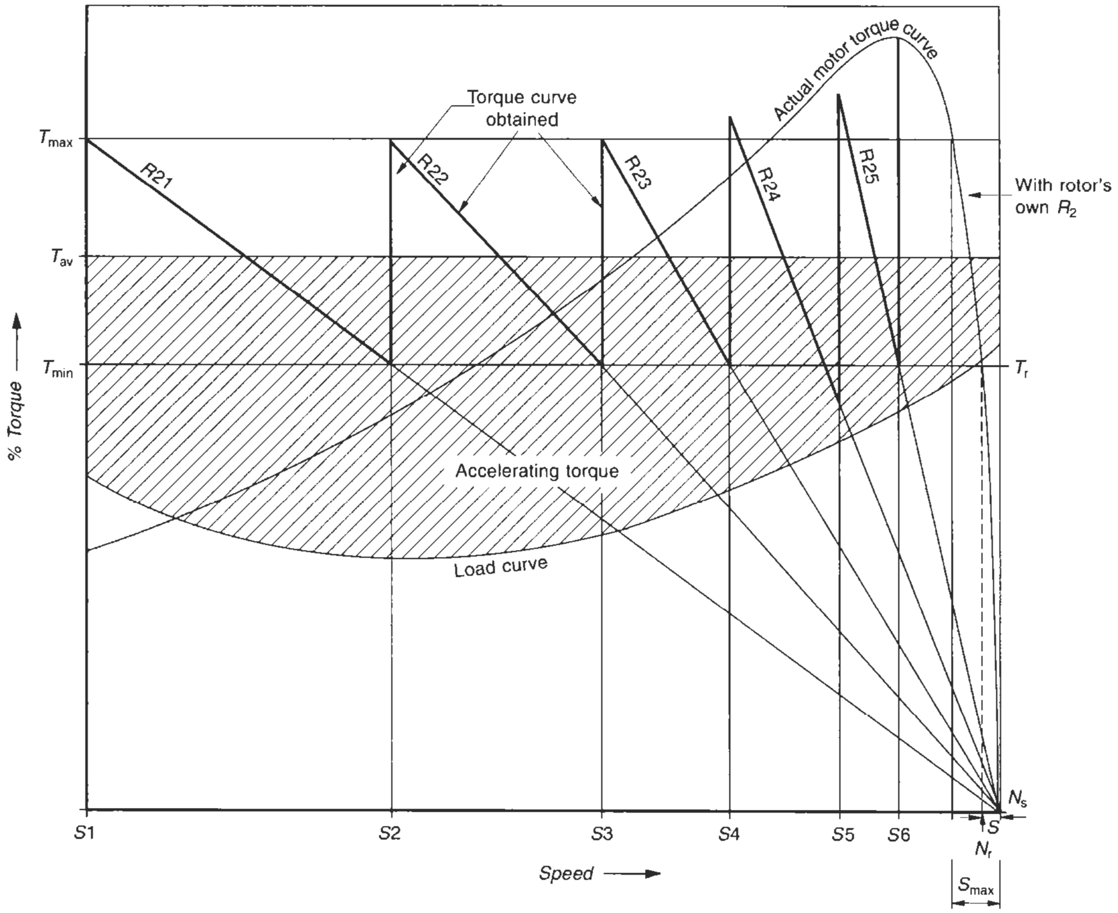

Figure 5.6(a) Torque curve with a five-step external resistance

$$\text{or } \frac{R_{21}}{S_1} = \frac{R_{22}}{S_2} \text{ etc.} = \frac{R_2}{S_{max}} \qquad \text{(a)}$$

where $R_{21}, R_{22}, \ldots R_{25}$ etc. are total rotor resistances per phase after introducing the external resistances, or

$$R_{21} = S_1 \cdot \frac{R_2}{S_{max}} \qquad (5.2)$$

At the start, when $S_1 = 1$

$$R_{21} = \frac{R_2}{S_{max}}$$

Similarly

$$I_{min} = \frac{{}_{ss}e_2}{\sqrt{\left(\frac{R_{21}}{S_2}\right)^2 + {}_{ss}X_2^2}} = \frac{{}_{ss}e_2}{\sqrt{\left(\frac{R_{22}}{S_3}\right)^2 + {}_{ss}X_2^2}} \text{ etc.}$$

$$\text{or } \frac{R_{21}}{S_2} = \frac{R_{22}}{S_3} \text{ etc.} = \frac{R_{25}}{S_{max}} \qquad \text{(b)}$$

From (a) and (b)

$$\frac{I_{min}}{I_{max}} = \frac{S_2}{S_1} = \frac{S_3}{S_2} = \ldots\ldots = \frac{R_{22}}{R_{21}} = \frac{R_{23}}{R_{22}} \ldots\ldots = \frac{R_2}{R_{25}} = \beta \qquad \text{(c)}$$

$$\therefore \quad R_{22} = \beta \cdot R_{21}$$

$$R_{23} = \beta \cdot R_{22} = \beta^2 \cdot R_{21} \text{ etc.}$$

$$\text{and} \quad R_2 = \beta \cdot R_{25}$$

$$= \beta \cdot \beta^4 \cdot R_{21}$$

$$= \beta^5 \cdot R_{21}$$

$$\text{or} \quad R_2 = \beta^5 \cdot \frac{R_2}{S_{max}} \text{ or } \beta^5 = S_{max}$$

$$\therefore \quad \beta = \sqrt[5]{S_{max}}$$

Generalizing this for a number of resistance steps α,

$$\beta = \sqrt[\alpha]{S_{max}} \qquad (5.3)$$

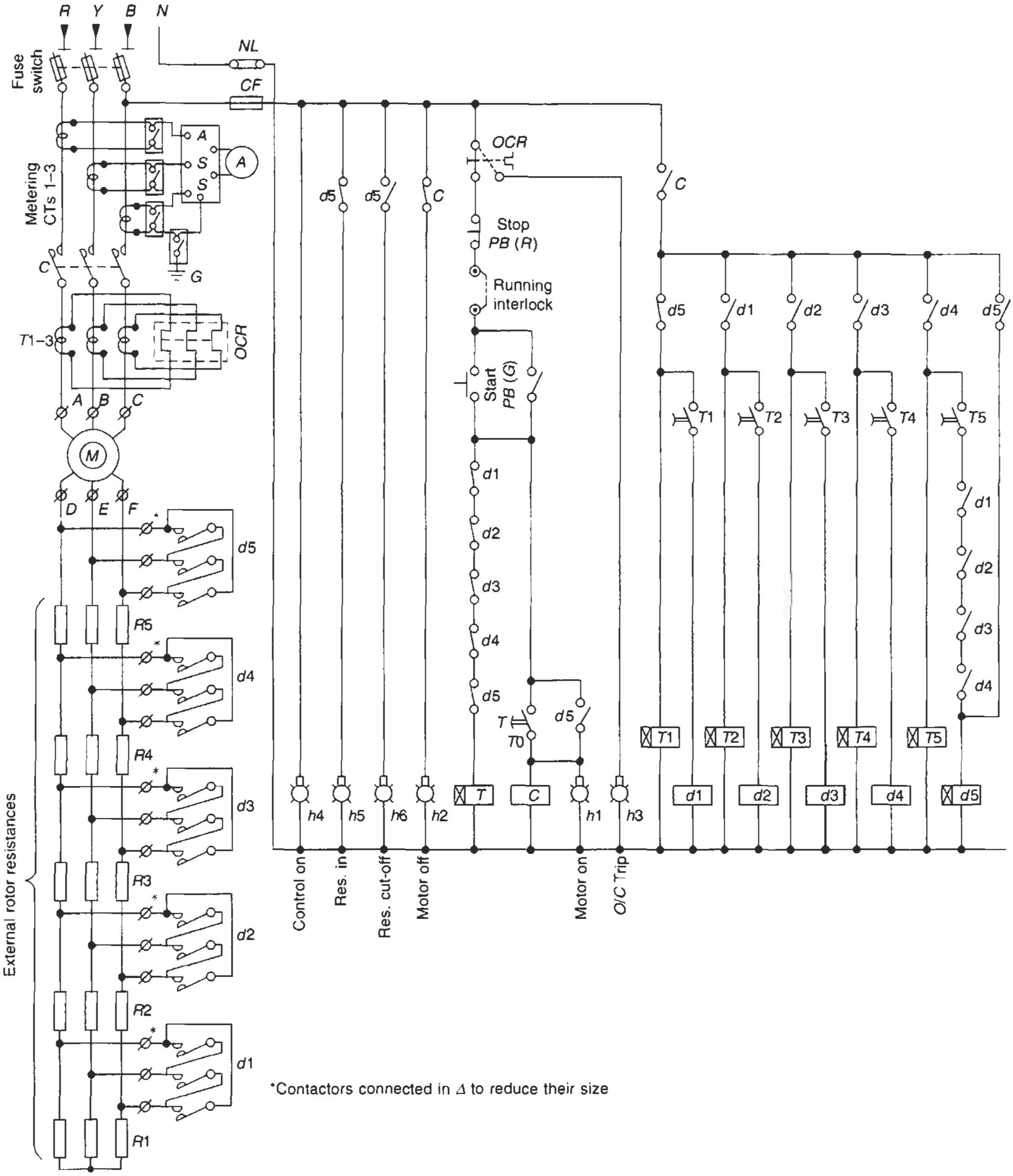

*Contactors connected in Δ to reduce their size

Figure 5.6(b) Power and schematic diagram for a five-step stator-rotor starter

Once β is known, the resistance value for each step can be determined. In the above case, the slip $S_{\max}$ corresponds to the slip at the operating point of the torque or current curve, where the desired torque $T_{\max}$ or current $I_{\max}$ occurs. This can be obtained from the torque and current curves available from the motor manufacturer (Figure 5.4).

Example 5.3

Consider a rotor resistance unit with five sections (total number of steps is six). Then in the previous example (Figure 5.4), considering T_{st} as 200% and the corresponding slip $S_{\max}$ as roughly 14% then

$$R_{21} = \frac{0.09}{0.14}$$

Step no.	*Total rotor circuit resistance R* Ω	*External resistance R_e* Ω	*Resistance between steps* Ω
1	$R_{21} = 0.643$	$0.643 - 0.09 = 0.553$	$0.643 - 0.435 = 0.208$
2	$R_{22} = \beta \cdot R_{21} = 0.676 \times 0.643 = 0.435$	$0.435 - 0.09 = 0.345$	$0.435 - 0.294 = 0.141$
3	$R_{23} = \beta \cdot R_{22} = 0.676 \times 0.435 = 0.294$	$0.294 - 0.09 = 0.204$	$0.294 - 0.199 = 0.095$
4	$R_{24} = \beta \cdot R_{23} = 0.676 \times 0.294 = 0.199$	$0.199 - 0.09 = 0.109$	$0.199 - 0.135 = 0.064$
5	$R_{25} = \beta \cdot R_{24} = 0.676 \times 0.199 = 0.135$	$0.135 - 0.09 = 0.045$	$0.135 - 0.09 = 0.045$
6	$R_2 = 0.09 \quad = 0.09$	$0.09 - 0.09 = 0$	$0.09 - 0 = 0.090$

Total rotor resistance $R_{21} = 0.643\ \Omega$ per phase. See Figure 5.5.

$$= 0.643\ \Omega$$

$$\text{and } \frac{I_{\min}}{I_{\max}} \text{ i.e. } \beta = \sqrt[5]{0.14}$$

$$\simeq 0.676$$

The power and schematic diagram for this configuration of resistance unit is given in Figure 5.6(b).

5.2.3 Number of steps

Generally, the number of steps is decided by the limits required in the maximum and minimum torque values. It is therefore not an arbitrary figure as assumed in the above example. We will, however, conclude in the next article, that the lower the limits of $T_{\max}$ and $T_{\min}$ the higher will be the required number of steps and vice versa.

The recommended number of steps, i.e. the number of accelerating contactors for general-purpose (light-duty) application, may be chosen as indicated in Table 5.1.

However, for specific load demands and accurate minimum and maximum torque requirements, the number of steps can be calculated on the basis of actual requirement as discussed in Section 5.2.2. Sometimes, for an economical design of the resistance unit, the number of steps can be reduced without jeopardizing the basic requirement of torque except for slightly higher or lower limits in its values as shown in Figure 5.6(a). Also, as we approach the rated speed, the closer become the steps and the greater the tendency to become infinite. In such a situation it becomes essential to liberalize the torque limits to achieve a quicker objective. Moreover, by now the motor will have almost run to its full speed and will pose no problem of a current or torque kick. Sometimes, however, when the motor possesses a substantially high pull-out torque than is required by the connected load, a quick removal of external resistance may cause an abrupt jump in the torque and may exert a jerk on the load, which may not be desirable. To overcome such a situation and to economize on the resistance design, a small resistance is sometimes left permanently connected in the rotor circuit, even when the motor is running at full load. Such a practice will apparently add to the rotor resistance and increase the full-load operating slip. The higher slip losses will, however, be shared by the rotor's own resistance and the external resistance, which is now permanently connected in the rotor circuit. The external resistance has to be continuously rated. One should, however, make sure that this slightly increased slip does not influence the performance of the driven machine or cause overheating of the rotor windings.

5.2.4 Duty cycle and duty rating of resistance units

The resistance units, when used only for starting purpose, are in the circuit for only a short time and are thus short-time rated. However, when they are employed for speed control, braking or plugging operations, in addition to the starting duty, they may be rated for continuous duty. The resistance units are thus classified according to their duty demand, i.e. number of operations per hour (c/h). See Chapter 3 on the duty cycle.

The following information is essential to decide the duty class of the resistance units:

1 The duty cycle of the motor

i.e. which one out of *S*-1 to *S*-10 (Chapter 3)
Say, for a duty cycle of
S_4 – 40% – 90 c/h and *FI* as 2.5

$$\text{i.e. each cycle of } \frac{60 \times 60}{90} = 40 \text{ seconds}$$

2 The starting current and the peak current during each cycle

By referring to NEMA publication ICS 2–213: with the above details, the resistance class can be found. The resistance units are designated by class number, current and resistance. NEMA tables ICS 2-213 to ICS 2-213-5 can be referred to for this purpose.

Table 5.1 Recommended number of starting steps of a resistance unit to switch a slip-ring motor

	Motor output in kW for different starting torques			*Standard no. of starting steps*
Torque	50% T_r	100% T_r	> 100% T_r	
	kW ≤ 20	kW ≤ 10	kW ≤ 7	3
	20 < kW ≤ 200	10 < kW ≤ 100	7 < kW ≤ 70	4
	kW > 200	kW > 100	kW > 70	6

5.2.5 Temperature rise limits

As in NEMA/ICS-2-213, the exposed conductor resistance units can attain a temperature rise up to 375°C, whereas when they are enclosed in a housing, the temperature rise must be restricted to 350°C. Accordingly, the temperature rise of the air in the vicinity of the housing, when measured at a gap of 1 inch from the enclosure, should not exceed 175°C.

Corollary

Very high temperature-rise permissible limits of resistance units render them unsuitable for installations which are fire-prone, such as pulp and paper industries, chemical industries, refineries, textile mills, etc. For specific applications and surroundings, however, resistance design can be altered (derated) to restrict the temperature rise to within desirable limits.

Moreover, high-temperature variation may result in large variations in the resistance of the grid and may vary the performance of a variable-speed drive if care is not exercised in selecting a proper alloy of the resistance. An alloy such as aluminium–chrome steel should be preferred when it is required to perform a speed control or a speed variation, as discussed above.

5.3 Hypothetical procedure to calculate the rotor resistance

The following is a more appropriate method to determine the number of steps and resistance of each step of the resistance grid, making use of only rotor data and desired limits of $T_{\max}$ and $T_{\min}$ as ascertained from the available load curve. The concept used in arriving at the number of steps is based on the fact that the rotor current varies in direct proportion of torque (equation (1.1)). For more clarity we will discuss this method using a practical example. The procedure is generally the same as that adopted in Example 5.3.

Example 5.4

Consider a conveyor system, requiring an average torque of 100% during pick-up. The motor data are as follows:

$kW = 450$
$N_r = 980$ r.p.m.
$V_r = 6.6$ kV
$I_r = 50$ A
$_{ss}e_2 = 750$ V
$I_{rr} = 435$ A
$T_{po} = 250\%$
$R_2 = 0.02\ \Omega$ (star connected)

Solution

For conveyors, the torque should not be very high, to economize on belt size and cost. Otherwise a higher safety factor must be considered for the belts, resulting in a wider or thicker belt at an extra cost. Therefore considering a torque demand of $T_{\max}$ as 180% and $T_{\min}$ as 120%, for a conveyor torque of 100%, providing an average starting torque of 150% and an accelerating torque of 50%, (Figure 5.7(a)):

For $T_{\max}$ (180%) $$R_{21} = \frac{750}{\sqrt{3} \times 435 \times 1.8}\ \Omega$$

$$= 0.553\ \Omega$$

and for $T_{\min}$ (120%) $$R_{21} = \frac{750 \cdot S_2}{\sqrt{3} \times 435 \times 1.2}\ \Omega \text{ etc.}$$

Determine slip S_2 to give the same value of R_{21} as above. Then for this slip, determine one step on the torque curve. Calculate for this slip S_2, R_{22}, etc. as shown in Table 5.2. Since the torque at synchronous speed is zero and the end portion of a torque curve is almost a straight line, the same results are obtained if a straight line is drawn from starting point '*a*' to zero torque '*A*'. Where it meets the $T_{\min}$ line determines one step. Here again, the torque goes up to $T_{\max}$ by another resistance value and this can also be joined to *A*. Continuation of such a procedure gives a point where it meets the motor curve. To reduce the number of steps, slight variations in $T_{\max}$ and $T_{\min}$ can be made as shown. Note that complete resistance cannot be removed at step *f* otherwise the torque will jump to about 212%, which may not be desirable. Thus, the total number of steps amount to seven (resistance segments six), which is reasonable.

We must also check whether the starting time of the motor with this profile of starting torque would be safe for the motor to pick up to the rated speed. Considering the same data as for Example 7.1, $GD_T^2 = 1866$ kgm^2

and $$T_a = \frac{450 \times 974}{980} \times 0.5$$

$$= 223.62 \text{ mkg}$$

$$\therefore \text{Accelerating time } t_s = \frac{1866 \times 980}{375 \times 223.62}$$

$$= 21.8 \text{ seconds}$$

This seems to be high and must be checked with the thermal withstand time of the motor (Section 3.5).

The upper limit of the starting torque chosen at 180% appears to be too low and can be raised to, say, 210%. This will also help in reducing the number of steps. Number of steps at 4–6 are preferable to economize on the cost of switchgears, and yet provide a reasonably smooth (free from overshoots) starting torque.

Considering $T_{\max} = 210\%$

$$\therefore \quad T_a = \frac{210 + 120}{2} - 100$$

$$= 65\%$$

and $$t_s = 16.77 \text{ sec.}$$

which is quite reasonable. A modified accelerating torque diagram is drawn in Figure 5.7(b), providing a smooth acceleration. Now we can cut off the last resistance at *e*, giving a jump in $T_{\max}$ of even less than 210%.

To obtain the starting characteristics according to Figure 5.7(b), it is essential to calculate the total rotor resistance, R_{21} and resistances between each step along the lines of Table 5.2.

5.3.1 Calculation of time between each step

To make the whole starting sequence automatic in a contactor type automatic starter unit it is essential to know the time the motor will take to accelerate from one slip to another between each step. It is required to select

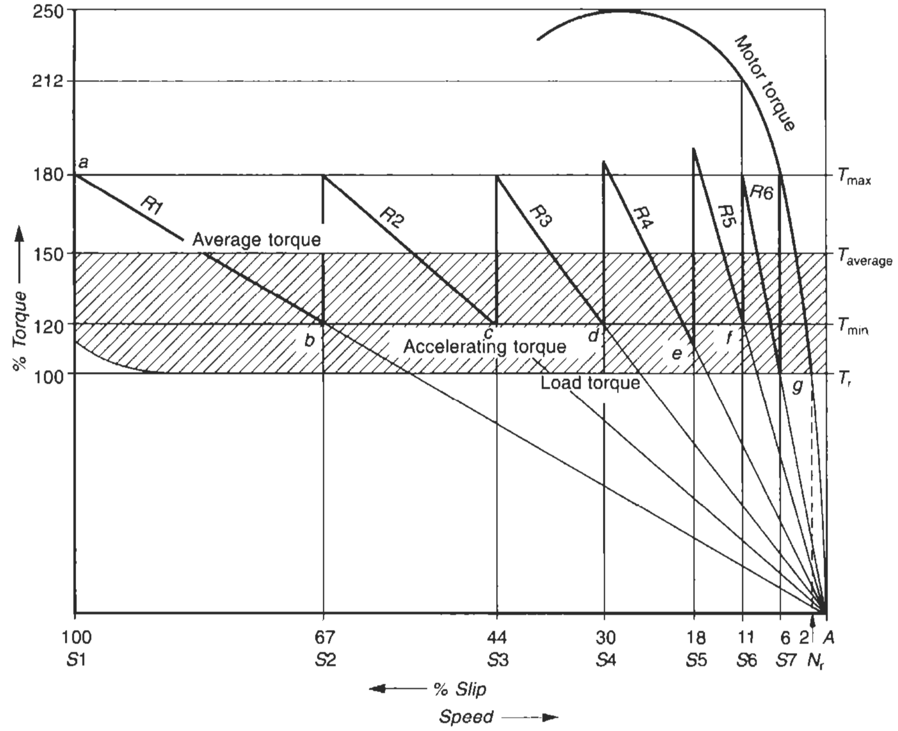

Figure 5.7(a) Determining the number of steps and accelerating torque between each step

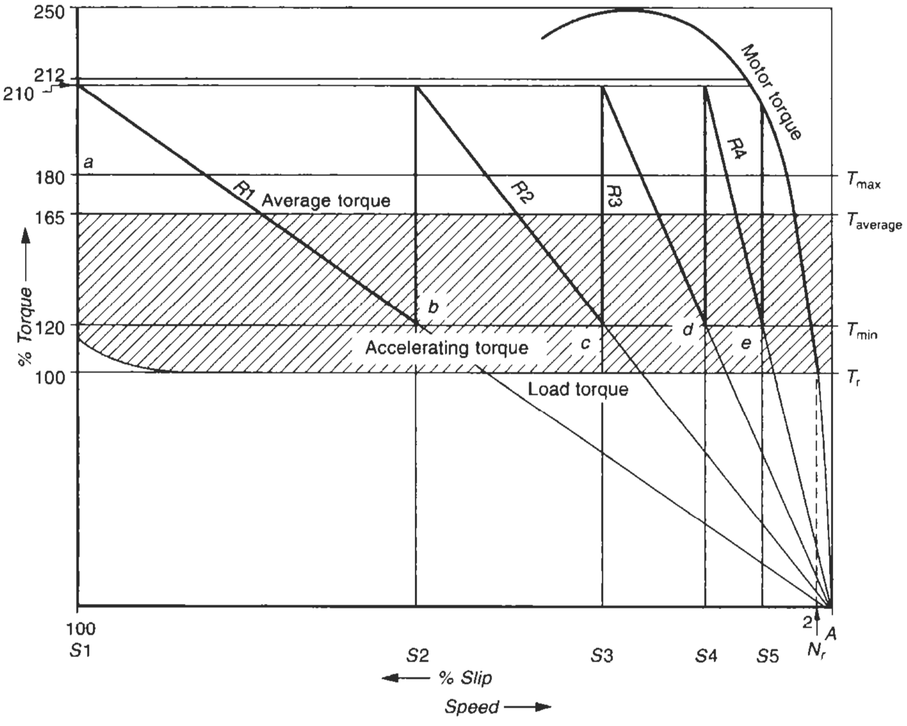

Figure 5.7(b) Determining the number of steps and accelerating torque between each step

Table 5.2 Determining the resistance between each step

Step no.	Total resistance (*R*) for T_{max}			Evaluation of slip for T_{min}		Resistance between each step Ω
	Symbol	Value Ω	At slip	For the same resistance	Chosen value of slips	
1	R_{21}	$\frac{750}{\sqrt{3} \times 435 \times 1.8}$ $= 0.553$	$S_1 = 100\%$	R_{21}	$S_2 = \frac{1.2}{1.8} \cdot S_1 \simeq 67\%$	$R_{21} - R_{22} = 0.182$
2	R_{22}	$R_1 . S_2 = 0.371$	$S_2 = 67\%$	R_{22}	$S_3 = \frac{1.2}{1.8} \cdot S_2 \simeq 44\%$	$R_{22} - R_{23} = 0.127$
3	R_{23}	$R_1 \cdot S_3 = 0.244$	$S_3 = 44\%$	R_{23}	$S_4 = \frac{1.2}{1.8} \cdot S_3 \simeq 30\%$	$R_{23} - R_{24} = 0.078$
4	R_{24}	$R_1 \cdot S_4 = 0.166$	$S_4 = 30\%$	R_{24}	$S_5 = \frac{1.2}{1.8} \cdot S_4 \simeq 18\%$	$R_{24} - R_{25} = 0.070$
5	R_{25}	$R_1 \cdot S_5 = 0.096$	$S_5 = 18\%$	R_{25}	$S_6 = \frac{1.2}{1.8} \cdot S_5 \simeq 11\%$	$R_{25} - R_{26} = 0.035$
6	R_{26}	$R_1 \cdot S_6 = 0.061$	$S_6 = 11\%$	R_{26}	$S_7 = \frac{1.2}{1.8} \cdot S_6 \simeq 6\%$	$R_{26} - R_2 = 0.041$
7	R_2	$R_2 = 0.020$	$S_7 = 6\%$	R_2	(at rated speed) = 2%	$R_2 = 0.020$

Note Total resistance, $R = 0.553\Omega$

and set the timer relay to automatically remove, one by one, each resistance step and provide a smooth acceleration. The procedure for calculating the acceleration time between each step is dealt with in Chapter 2 and a schematic diagram is given in Figure 5.6(b).

5.4 Speed control of slip-ring motors

The speed of a slip-ring motor can be varied by up to 25% of the rated speed. A further reduction may greatly diminish the cooling effect and reduce the output in a much larger proportion and will not be worth while. Moreover, it will now operate in a region which is unstable and may thus stall (see any speed–torque curve). As discussed in Section 5.1, during speed reduction, with the torque remaining almost constant, the motor will draw the same power from the supply lines while the output will be proportional to the speed minus the cooling effect. On the subject of cooling, Table 5.3 shows the approximate values of h.p. and torque a motor will be able to develop at various speed reductions. Figure 5.8 gives the curves for output and torque. From these curves it is evident that the losses increase in a much larger proportion than the speed variation. The speed in such motors can be varied in the following four ways:

1 Torque and output varying as in the curves, in which case no derating is necessary.
2 Keeping torque constant throughout the speed range. At reduced speed the torque is low and therefore the motor rating should be derated accordingly, e.g. at 50% speed, the torque is 73%. To obtain 100% torque, the motor should be rated for 100/0.73, i.e. 137%. Table 5.3 shows the derating values and Figure 5.9 the derating curve. The variation in the rotor current is also in the same proportion as the torque.
3 Torque varying with the square of the speed as for fans and centrifugal pumps etc. as discussed in Chapter 2.
4 Keeping the output constant throughout the speed range. As a result of still higher derating, the torque of the selected higher size motor (column 3 of Table 5.3) will become very high and is generally not preferred. See also Figure 6.51.

Table 5.3 Variation in torque and output with speed in slip-ring motors

		Output		Torque or current rating	
Serial no. 1	% of rated speed 2	%	Rating required for constant output (%) 3	%	Rating required for constant torque (%) 4
1	100	100.0	100	100	100
2	90	86.8	115	96	104
3	80	73.6	136	92	109
4	70	61.0	164	87	115
5	60	48.0	208	80	125
6	50	36.5	274	73	137
7	40	26.0	384	65	154
8	30	16.5	605	55	182

Notes
1 These value are only indicative and may vary from one manufacturer to another, depending upon their design and cooling efficiency and also the normal speed of the motor. The higher the motor rated speed, the lower will be the cooling at lower speeds, compared to a slow-speed motor, and will require yet higher deratings.
2 The rotor current also varies in the same proportion as the torque.

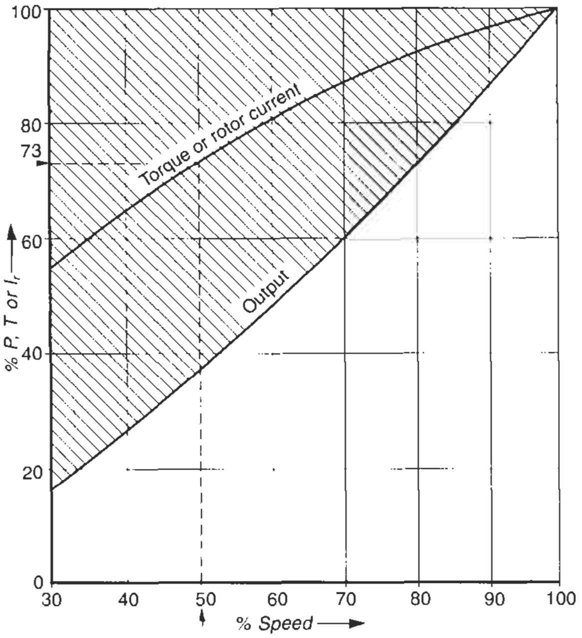

Shaded portion indicates power loss in the rotor circuit

Figure 5.8 Variation in torque and output with speed

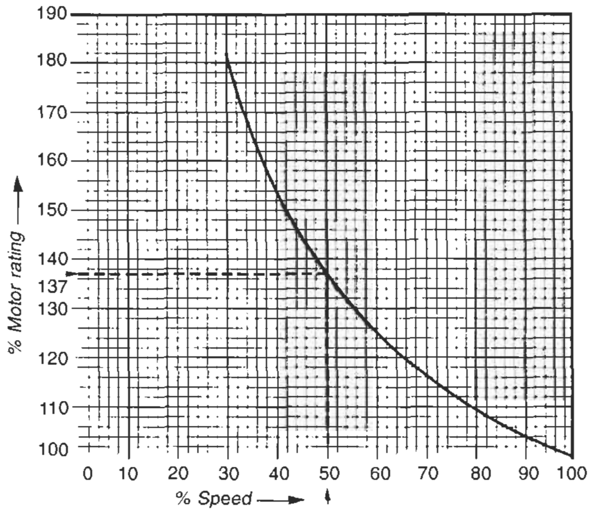

Figure 5.9 Multiplying factor for motor rating for speed variation at constant torque

5.4.1 Resistance for speed control

In this case the regulating resistance grids are normally continuous duty, unlike those for start-up, which are short-time duty. Equations (5.1a–d) can be used, for determining the total rotor circuit resistance for a particular speed variation, i.e.

$$R_{21} = \frac{_{ss}e_2}{\sqrt{3} \cdot I_{rr}} \cdot \frac{\%\text{Speed reduction}}{\%\text{Current at the reduced speed}} \qquad (5.4)$$

To achieve a better torque, the slip-ring rotors are normally wound in star, in which case the rotor current is $\sqrt{3}$ time more than in delta for the same output. Also since the torque is proportional to the rotor current equation (1.1), the torque developed will be greater in this case.

Example 5.5

For the 125 kW motor of Example 5.2, if a speed reduction is required by 50% at constant torque (see also Figure 6.51) and the rotor current is now 73% of its rated value (Table 5.3), then the total rotor circuit resistance

$$R_{21} = \frac{500 \times 0.5}{\sqrt{3} \times 180 \times 0.73}$$

$$\sim 1.098\ \Omega$$

and external resistance

$R_e = 1.098 - 0.09$

or $\quad 1.008\ \Omega$

5.5 Moving electrode electrolyte starters and controllers

5.5.1 As a rotor resistance for slip-ring motors

These are similar to stator resistance starters, as discussed in Section 4.2.3 and can be used in the rotor circuit to control the rotor side resistance. Figure 5.10 shows the smooth variation of resistance by electrolytic vaporization compared to a conventional metallic resistance variation. The self-variable resistance of electrolyte is equivalent to almost three or four steps of a metallic resistance and makes such starters economical. Normally one step is sufficient for motors up to 160 h.p. (For speed–torque

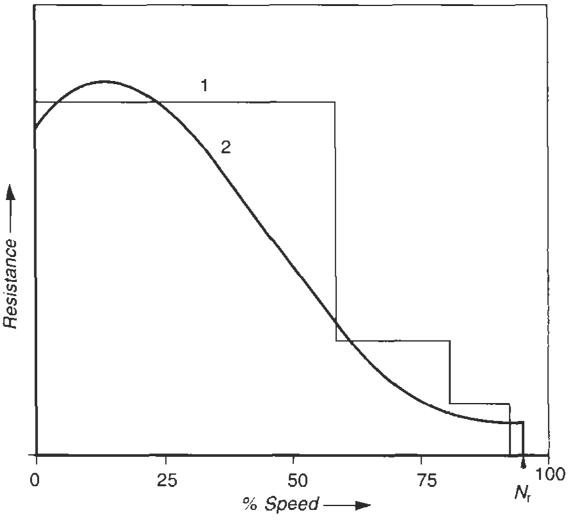

Variation in resistance during starting
1. 3–Step metallic resistance
2. Liquid electrolyte

Figure 5.10 Variation of electrolyte resistance with speed

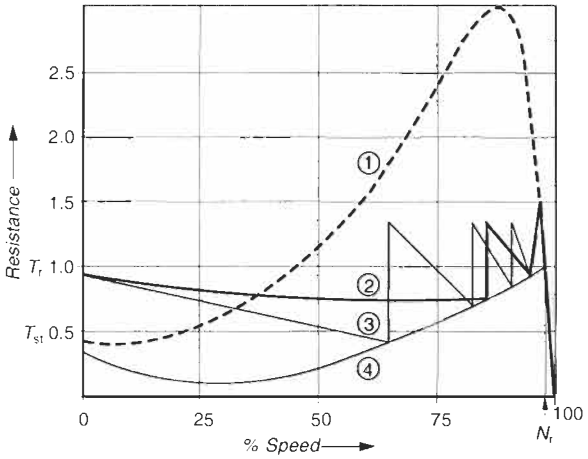

1. DOL torque
2. Liquid electrolyte (rotor circuit)
3. 5–Step metallic resistance
4. Load torque

Figure 5.11 Smooth variation of torque with smaller number of steps in liquid electrolyte starters

characteristics see Figure 5.11). Starting requirements such as electrolyte quality and electrode depth, the active area of the electrode and the positioning of the flanges etc., are determined by the requirement of the drive.

The remaining details are the same as for stator resistance starters. Here also, by adding individual electrolyte stacks, starters of any rating up to 25 000 h.p. can be produced from a smaller unit of 10 h.p. or so (Figure 5.12). These starters are almost 20–25% more economical than a conventional contactor and timer-operated metallic rheostatic starters discussed earlier.

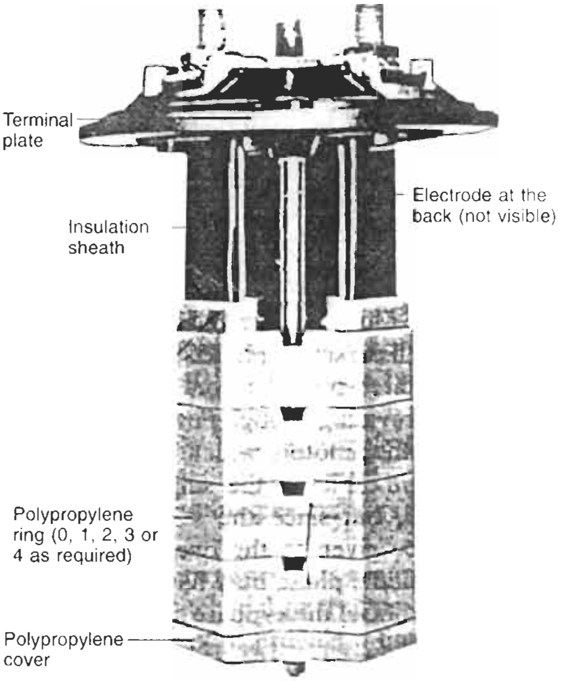

Figure 5.12 Liquid rotor starter (Courtesy: AOYP Engineering)

5.5.2 Automatic speed control of slip-ring motors

By making the electrodes move through a geared motor, it is possible to achieve even automatic speed control of slip-ring motors through such starters.

Relevant Standards

IEC	*Title*	*IS*	*BS*
60947-1/1998	Specification for low voltage switchgear and control gear. General rules	13947-1/1998	BS EN 60947-1/1992
60947-4-1-1990	Electromechanical contactors and motor starters, including rheostatic rotor starters	13947-4-1/1993	BS EN 60947-4-1/1992

Related US Standards ANSI/NEMA and IEEE

NEMA/ICS-2-213/1993	Resistors and rheostats

Notes

1 In the tables of relevant Standards in this book while the latest editions of the standards are provided, it is possible that revised editions have become available. With the advances of technology and/or its application, the updating of standards is a continuous process by different standards organizations. It is therefore advisable that for more authentic references, readers should consult the relevant organizations for the latest version of a standard.

2 Some of the BS or IS standards mentioned against IEC may not be identical.

3 The year noted against each standard may also refer to the year of its last amendment and not necessarily the year of publication.

List of formulae used

Selection of rotor resistance

$$R_{21} = R_2 + R_e = \frac{{}_{ss}e_2}{\sqrt{3} \cdot I_{rr1}} \qquad (5.1a)$$

(Rotor $\curlyvee$, external resistance $\curlyvee$)

$$R_{21} = R_2 + 3R_e = \frac{\sqrt{3} \cdot {}_{ss}e_2}{I_{rr1}} \qquad (5.1b)$$

(Rotor Δ, external resistance $\curlyvee$)

$$R_{21} = R_2 + \frac{1}{3} R_e = \frac{{}_{ss}e_2}{\sqrt{3} \cdot I_{rr1}} \qquad (5.1c)$$

(Rotor $\curlyvee$, external resistance Δ)

$$R_{21} = R_2 + R_e = \frac{\sqrt{3} \cdot {}_{ss}e_2}{I_{rr1}} \qquad (5.1d)$$

(Rotor Δ, external resistance Δ)

R_2 = Rotor resistance Ω/phase
R_e = External resistance Ω/phase
R_{21} = Total rotor resistance Ω/phase
R = required rotor circuit resistance
${}_{ss}e_2$ = rotor standstill voltage
I_{rr1} = required rotor current

To determine external resistance and time of start

$$R_{21} = S_1 \cdot \frac{R_2}{S_{max}} \qquad (5.2)$$

R_{21}, R_{22}, are total rotor resistances per phase after introducing the external resistances

S_1 = slip at the beginning of a step
S_{max} = slip at the end of a step

$$\beta = \sqrt[\alpha]{S_{max}} \qquad (5.3)$$

$$\beta = \frac{I_{min}}{I_{max}} = \frac{S_2}{S_1} = \frac{S_3}{S_2} = \ldots.$$

$$= \frac{R_{22}}{R_{21}} = \frac{R_{23}}{R_{22}} = \ldots.$$

α = no. of resistance steps

Resistance for speed control

$$R_{21} = \frac{{}_{ss}e_2}{\sqrt{3} \cdot I_{rr}} \cdot \frac{\text{\% Speed reduction}}{\text{\% Current at the reduced speed}} \qquad (5.4)$$

6

Static Controls and Braking of Motors

Contents

6.1 Speed control in squirrel cage motors

Speed control in slip-ring motors has been discussed in the previous chapter. Squirrel cage motors have limitations in their speed control in view of their fixed rotor parameters. Speed variation, in fixed steps, however, is possible in such motors if the stator is wound for multipoles and such motors are known as pole changing motors. Up to four different speeds can be achieved in such motors economically, in combinations of 2/4, 4/6, 4/8, 6/8, 6/12, 2/4/6, 4/6/8, 2/4/6/12 and 4/6/8/12 poles etc. or any other similar combination. For limitation in the motor size and flux distribution, winding sets of more than two are not recommended. The two windings can be arranged for two, three or (maximum) four different speeds.

6.1.1 One winding

The single winding can be connected in delta/double star (*Δ/YY*) to give two combinations of poles in the ratio of 2:1, i.e. 4/2, 8/4 or 12/6 poles etc. as shown in Table 6.1.

6.1.2 Two windings

When more than two or non-multiple speeds are required (e.g. 4/6 or 6/8 etc.) then two windings are necessary. Each can further be connected in *Δ/YY* as noted above to give one additional speed for each winding and can thus be arranged for three or four different speeds as shown in Table 6.1.

6.2 Speed control through solid-state technology

In the following text we have discussed bow, with the application of varying supply parameters (V and f), one can alter the characteristics of a fixed parameter induction motor in any desired way. We then deal with the application of solid-state technology to obtain the variations in the fixed supply parameters to achieve the required controls in an a.c. machine.

The static drives also provide a few more advantages such as

1 They transform an unbalanced supply system automatically to a balanced supply system through the switching logistics of the IGBTs* or the SCRs*. The feature is termed dynamic phase balancing.
2 Since the starting inrush current is kept moderate for all types of drives, it can economize not only on ratings of the switchgears and cables but also on the size of the generator when a captive power is required to feed the load.

The method for speed control as discussed earlier are only conventional and can only provide a fixed speed variation say, from 3000 r.p.m. to 1500 r.p.m. to 750 r.p.m. or vice versa. They cannot provide a smoother speed variation between any two speeds. The application of variable voltage is also not practical nor advisable, for it means a poor performance by the machine at lower voltages, whereas a higher voltage (more than 5% of the rated) is not permissible. Moreover, through this method the speed can be varied only within a very limited span due to very unstable conditions below the T_{po} region, and a more than proportionate reduction in the h.p. developed. The torque also reduces in square proportion of the voltage. For such applications, therefore, which required smoother speed variation and over a wide range, one had no choice but to select d.c. drives. These drives were costly and needed higher maintenance because commutators, sliprings and brushes etc. caused continuous arcing and required constant checks and maintenance as well as more downtime, which a process industry could least afford. Systems were used that required very elaborate arrangements, using two or more a.c. machines, rendering the whole system very cumbersome, vulnerable and yet more expensive. Since the speed was normally changed through the variation in frequency ($N \propto f$), these systems were basically frequency changers (converters) and were known as

- Cascade connections (concatenation)
  Use of two motors and the prime mover was a slip-ring motor.
- Frequency converters
- Schrage type motor (commutator brush shifting arrangement)
- Leblanc or Scherbius Advancers.

These systems were evolved to provide a variable – frequency supply source to feed directly the stator terminals of the a.c. motor or its rotor through the slip-rings. The motors had to be invariably a combination of two or more slip-ring motors to receive the rotor frequency voltage from the other machine or feed back the rotor frequency voltage to another machine. The easiest method was to have a variable-frequency supply source, which was not possible, unless the supply source itself was captive and specified for this drive alone or a combination of these drives on the same bus.

There was thus a practical limitation in employing an a.c. motor for all such applications that required frequent speed variation. Since these drives are no longer in practice, we have not considered it relevant to provide more details of these systems.

The above methods provide speed variation in steps, as in squirrel cage motors or in two machines or more, as in frequency converters, and cannot be used for a process line, which requires frequent precise speed controls. Until a few years ago there was no other option with all such applications and they had to be fitted with d.c. motors only. D.C. motors possess the remarkable ability of precise speed control through their separate armature and field controls. In d.c. motors the speed

---

*IGBTs - Insulated gate bipolar transistors
SCRs - Silicon-controlled rectifiers (thyristors)
Both are discussed in the subsequent text.

Table 6.1 Connection diagrams for multispeed motors

No. of wdgs	*Poles*	*Connection*	*Connection diagram*
One	8/4 or 4/2 etc.	Delta/double star	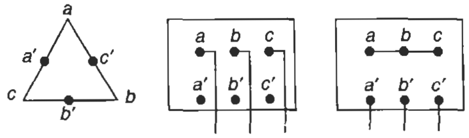 Motor winding (i) 8-pole (ii) 4-pole (iii)
Two	8/6 or 6/4 etc.	Star/star or delta/delta	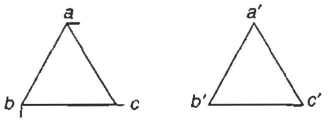 8-pole (i) 6-pole (ii)
Two	8/6/4 or 6/4/2 etc.	One delta/double star and one star of delta	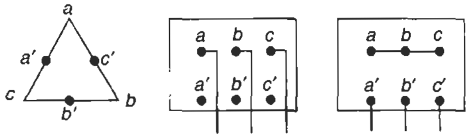 Winding no. 1 8/4-pole (i) 8-pole (ii) 4-pole (iii) 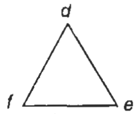 Winding no. 2 6-pole (iv)
Two	12/8/6/4 etc.	Two delta/double star	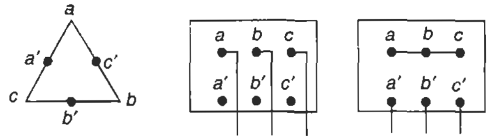 Winding no. 1 12/6-pole (i) 12-pole (ii) 6-pole (iii) 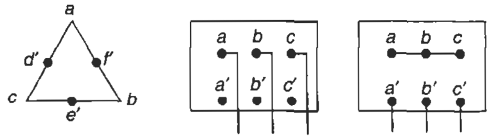 Winding no. 2 8/4-pole (iv) 8-pole (v) 4-pole (vi)

control below the base speed can be achieved through the armature control at constant torque and above the base speed through the field control at constant h.p. (Figure 6.7(b)). But a d.c. machine also has a few limitations:

1 Frequent maintenance due to continuously rubbing brushes mounted on a commutator.
2 A continuous arcing as a result of the above, giving rise to a source of fire hazard, particularly at installations that are contaminated with explosive gases, vapour or volatile liquids or are handling materials that are hazardous.

An induction motor, particularly a squirrel cage, is cheap, robust and is devoid of any such operating limitations and, has an obvious advantage over d.c. machines. It alone can provide an immediate answer to such limitations. With the advent of static technology as discussed later, it has now become possible to make use of cage motors with the same ease and accuracy of speed control and that are even better than d.c. machines. Static drives response extremely fast as they can be microprocessor based. They can compute process data and provide system corrections almost instantly (called 'real-time processing') as fast as within 1–2 ms and even less. In Table 6.5 we show a broad comparison between a d.c. machine and a static drive using cage motors. It gives an idea of applying static technology to all process requirements with more ease and even better accuracy. With the advent of this technology, the demand for d.c. machines is now in decline as noted in Section 6.19.

6.2.1 Theory of application

The application of solid-state technology for the speed control of a.c. motors is based on the fact that the characteristics and performance of an induction motor can now be varied, which until a few years ago were considered fixed and uncontrollable. This concept is now a matter of the past. With the advent of solid-state technology, which was introduced around 1970 for industrial application, the motor's parameters and therefore its performance can now be varied by varying the supply parameters of the system, for example the voltage and frequency in cage motors, and rotor resistance or rotor current in slip-ring motors, as discussed in Chapter 1. This technology can also provide a varying resistance in the rotor circuit of a slip-ring motor by varying the rotor current as discussed in Section 6.16.3 without the loss of power in the external resistance. It is thus also suitable to provide speed control in a slip-ring motor. Speed control of slip-ring motors with the use of solid-state technology is popularly known as slip recovery systems, as the slip power can also be fed back to the source of supply through a solid-state feedback converter bridge, discussed later.

6.2.2 Effects of variable supply parameters on the performance of an induction motor

Here we analyse the effect of variation in the incoming supply parameters (voltage and frequency) on the characteristics and performance of an induction motor (such as its flux density, speed, torque, h.p., etc). We also assess the effect of variation of one parameter on the other, and then choose the most appropriate solid-state scheme to achieve a required performance. We generally discuss the following schemes:

1 *V/f* control (speed control at constant torque)
2 Phasor (vector) control
  Single-phasor (vector) control
  - Field-oriented control (FOC), commonly known as double-phasor or phasor (vector) control and
  - Direct torque control (DTC)

6.3 *V/f* control (speed control at constant torque)

This is also known as variable frequency control. Consider the following equations from Chapter 1:

$$T \propto \frac{S \cdot {}_{ss}e_2^2 \cdot R_2}{R_2^2 + S^2 \cdot {}_{ss}X_2^2} \qquad (1.3)$$

$$\text{and } T \propto \phi_m \cdot I_{rr} \qquad (1.1)$$

$$\text{and } e_2 = 4.44\ Kw \cdot \phi_m \cdot Z_r \cdot f_r \qquad (1.5)$$

$\therefore$ for the same supply voltage V_l

$$e_2 \propto \phi_m \cdot Z_r \cdot f_r$$

$$\text{i.e. } \phi_m \propto \frac{e_2}{f_r}$$

$$\text{and } T \propto \phi_m \propto \frac{e_2}{f_r}$$

i.e. for the same design parameters (ϕ_m remaining the same) and ratio e_2/f_r, the torque of the motor, T, will remain constant. Since both e_2 and f_r are functions of the supply system, a variation in V_l and f can alter the performance and the speed–torque characteristics of a motor as required, at constant torque. By varying the frequency smoothly from a higher value to a lower one or vice versa (within zero to rated), an almost straight line torque can be achieved (Fig. 6.3). This type of a control is termed variable voltage, variable frequency (v.v.v.f or *V/f*) control. At speeds lower than rated, the natural cooling may be affected, more so at very low speeds, and may require an appropriate derating of the machine or provision of an external or forced cooling. The practice of a few manufacturers, up to medium-sized motors, is to provide a cooling fan with separate power connections so that the cooling is not affected at lower speeds.

Note The speed of the motor can be varied by varying the frequency alone but this does not provide satisfactory performance. A variation in frequency causes an inverse variation in the flux, ϕ_m, for the same system voltage. The strength of magnetic field, ϕ_m, develops, the torque and moves the rotor, but at lower speeds, f would be reduced, which would raise ϕ_m and lead the magnetic circuit to saturation. For higher speeds, f would be raised, but that would reduce ϕ_m, which would adversely diminish the torque. Hence frequency variation alone is not recommended practice for speed control. The recommended practice is to keep *V/f* as constant, to maintain the motor's vital operating parameters, i.e. its torque and ϕ_m, within acceptable limits.

The above is valid for speed variation from zero to the rated speed. For speed variations beyond the rated speed, the theory of *V/f* will not work. Because to maintain the same ratio of *V/f* would mean a rise in the applied voltage which is not permissible beyond the rated voltage, and which has already been attained by reaching the rated speed. The speed beyond the rated is therefore obtained by raising the supply frequency alone (in other words, by weakening the field, ϕ_m) and maintaining the voltage as constant at its rated value. We can thus achieve a speed variation beyond the rated speed by sacrificing its torque and maintaining the product $T \cdot f$ as constant. Since $P \propto T \cdot N_r$ and $N_r \propto f_r$, therefore speed variation can now be achieved at constant power output (see Figure 6.4). We have combined Figures 6.3 and 6.4 to produce Figure 6.5 for more clarity, illustrating the speed variation at constant torque below the base speed and at constant h.p. above the base speed.

V/f is the most commonly used method to control the speed of a squirrel cage motor. The fixed frequency a.c. supply, say, at 415 V, 50 Hz from the mains, is first rectified to a constant or variable d.c. voltage, depending upon the static devices being used in the inverter circuit and their configuration. This voltage is then inverted to obtain the required variable-voltage and variable-frequency a.c. supply. The basic scheme of a *V/f* control is illustrated in Figure 6.6. The approximate output voltage, current and torque waveforms are shown in Figure 6.7(a). The torque curve is now almost a straight line, with only moderate pulsations, except for some limitations, as discussed later, enabling the drive to start smoothly. When, however, a higher starting torque is required to start the motor quickly, it is also possible to boost the starting torque to a desirable level (up to the designed T_{st} of the motor) by raising the voltage to V_r, through the pulse width modulation (PWM), discussed in Section 6.9.2. The starting current can also be reduced to only 100–150% of the rated current or as desired, to the extent possible, by suitably varying the *V/f*. The control can thus also provide a soft-start switching. It may, however, be noted that there is no control over the starting current, which is a function of the applied voltage, and the minimum voltage during start-up will depend upon the motor, the load characteristics and the thermal withstand time of the motor (Section 2.8). With the use of static control drives, it is however, possible to minimize the starting inrush current to a reasonable level but with a loss of starting torque. To do so, it is advisable to match the load and the motor starting characteristics and determine the minimum starting torque required to pick up the load. For this starting torque is then adjusted the starting voltage. The magnitude of the starting current will then depend upon this voltage.

The static drives too are defined by their overcurrent capacity and its duration. IEC 60146-1-1 has defined it as 150–300%, depending upon the type of application, for a maximum duration of one minute. For instance, for centrifugal drives, which are variable torque drives (Figures 2.10 and 2.11) such as pumps, fans and compressors etc. an overcurrent capacity of the order of 110% for one minute would be adequate. For reciprocating drives, which are constant torque drives (Figures 2.12 and 2.13), such as ball mills and conveyors, a higher overcurrent capacity say, 150–300% for one minute, would be essential. For higher starting currents or longer durations of start, the drive may have to be derated, which the manufacturer of the drive alone will be able to suggest. Drive ratings are basically selected on the basis of motor rating and the starting currents and are rated for a starting current of 150% for one minute. If more than 150% is required, then the rating of the drive is worked out on the basis of the starting current requirement and its duration.

V/f is a concept to vary the speed, maintaining a constant torque. Through a static drive, however, it is possible to vary one parameter more than the other, to obtain any speed–torque characteristic to meet a particular duty cycle. By varying the rectifier and inverter parameters, a whole range of *V/f* control is possible. High-inertia loads, calling for a slip-ring motor for a safe and smooth start, can now make use of a standard squirrel cage motor. Open- or closed-loop control systems can be employed to closely monitor and control the output voltage and frequency so that the ratio of *V/f* is always maintained constant.

Limitations of V/f control

Figure 6.1 illustrates theoretical speed–torque curves. In fact at very low speeds, say, at around 5% of N_r (at 5% f) or less, the motor may not be able to develop its theoretical torque due to a very low stator voltage, on the one hand, and relatively higher proportion of losses and a lower efficiency of the machine, on the other. Figure 6.2 illustrates a realistic torque characteristic at different supply frequencies. They display a sharply drooping and rather unstable performance at very low speeds. For more accurate speed controls at such low speeds, one may have to use phasor-controlled drives, discussed later. Phasor-controlled drives are available at reasonable cost and can provide extremely accurate speed controls even at very low speeds, 5% of N_r and less, or cyclo-converters, which are relatively very costly, for large drives. Typical applications calling for such a high torque at such low speeds could be a steel plant process line or material handling (e.g. holding a load stationary at a particular height by the crane, while shifting material from one location to another).

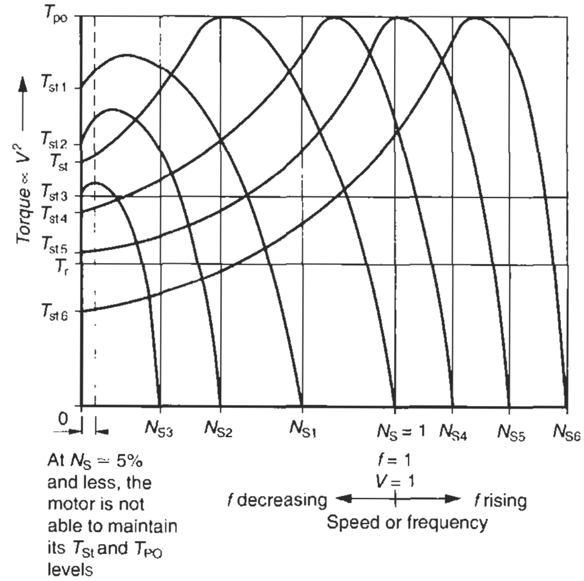

Figure 6.1 Approximate theoretical representation of speed versus torque for *V/f* control of a motor at different values of *f*

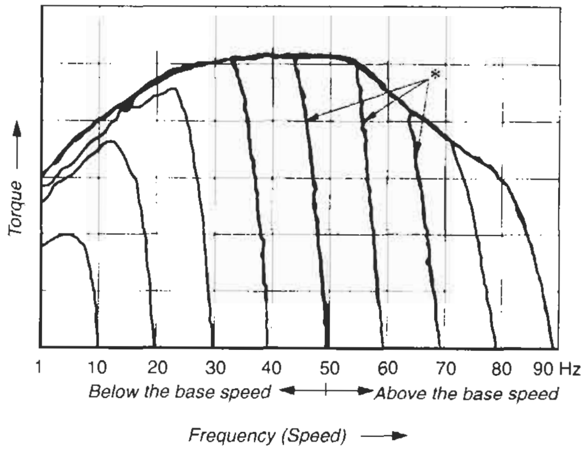

* Drooping torque at lower speeds. At higher speeds too, the torque profile is variable

Figure 6.2 Actual speed–torque characteristics by a conventional frequency control (*V/f* control)

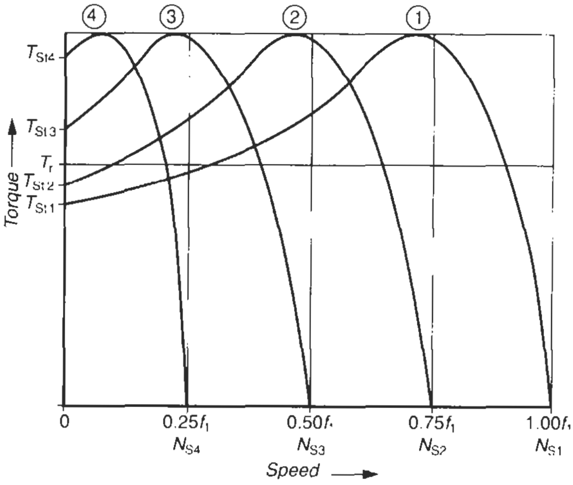

① $T_{St1} \propto \frac{1}{1.0f}$ ② $T_{St2} \propto \frac{1}{0.75f}$

③ $T_{St3} \propto \frac{1}{0.5f}$ ④ $T_{St4} \propto \frac{1}{0.25f}$

(*V/f* control ϕ_{max} constant)

Figure 6.3 Speed variation at constant torque

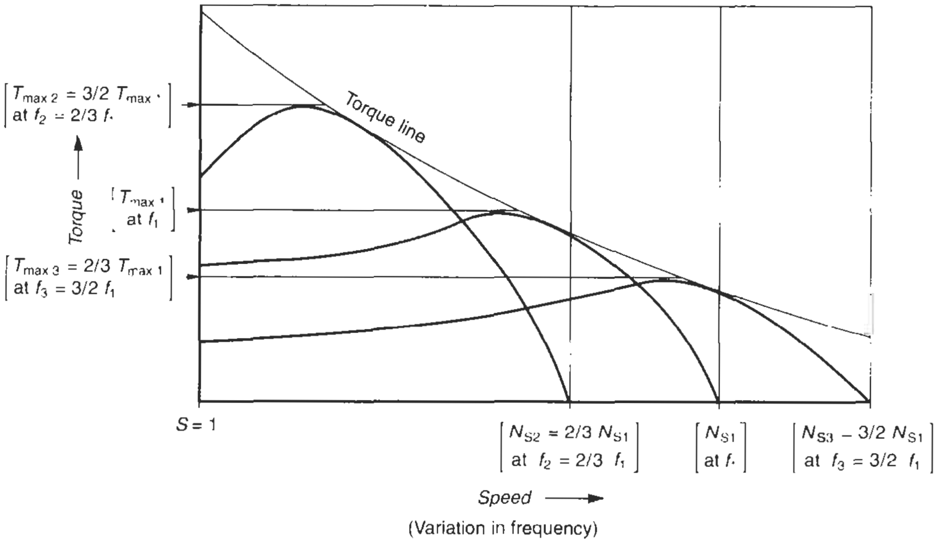

Figure 6.4 Speed variation at constant HP

Application

In a *V/f* control generally, only the frequency is varied to obtain the required speed control. Based on this frequency, the switching logistics of the inverter control circuit control the inverter's output voltage using the PWM technique to maintain the same ratio of *V/f*. A *V/f* control is, however, not suitable at lower speeds. Their application is limited to fan, pump and compressor-type loads only, where speed regulation need not be accurate, and their low-speed performance or transient response is not critical and they are also not required to operate at very low speeds. They are primarily used for soft starts and to conserve energy during a load variation (see Example 6.1 for more clarity). Rating, however, is no bar.

6.4 Phasor (vector) control

A simple *V/f* control, as discussed above, will have the following limitations:

- Control at very low speeds is not possible.
- Speed control may not be very accurate.
- Response time may not be commensurate with the system's fast-changing needs.

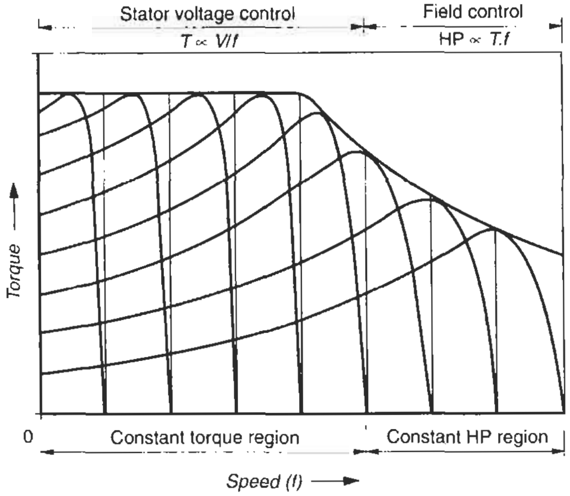

Figure 6.5 Speed control in an a.c. motor

While all these parameters are extremely essential for a process line, with the R&D in the field these limitations have been overcome with the use of phasor controls. To implement these controls different manufacturers have adopted different control and feedback systems to monitor and control the torque and field components. They have also given these controls different trade names. The basic technological concept remains the same but process implementation may vary from one manufacturer to another. Below we attempt to identify the more common phasor controls introduced by a few leading manufacturers.

6.4.1 Single phasor (vector) control

Let us consider the simple equivalent motor circuit diagram as shown earlier in Figure 1.15. The no-load component of the current, I_{nl}, that feeds the no-load losses of the machine contains a magnetizing component, $I_m \cdot I_m$ produces the required magnetic field, ϕ_m, in the stator and the rotor circuits, and develops the rotor torque so that

$$T \propto \phi_m \cdot I_{rr} \qquad (1.1)$$

The magnetizing current, I_m, is a part of the motor stator current I_l (Figure 1.15). The rotor current is also a reflection of the active component of this stator current, as can be seen in the same figure, so that

$$\bar{I}_l = \bar{I}_{nl} + \bar{I}_a$$

$$= \bar{I}'_m + \bar{I}_m + \bar{I}_a \qquad (6.1)$$

All of these are phasor quantities. I_a is the active component responsible for developing the rotor torque and I_m the magnetic field. Varying I_a would mean a corresponding variation in the torque developed.

Variation of speed below the base (rated) speed

The machine now operates in a constant torque region (see Figure 6.7(b)). The frequency is reduced as is the voltage to maintain the same ratio of *V/f*. At lower voltages, I_l and therefore I_a will diminish, while ϕ_m and I_m will rise, so that $\phi_m \cdot I_{rr}$ is a constant.

Equation (6.1) can be rewritten, for better analysis with little error as

$$I_l \simeq \bar{I}_a + \bar{I}_m$$

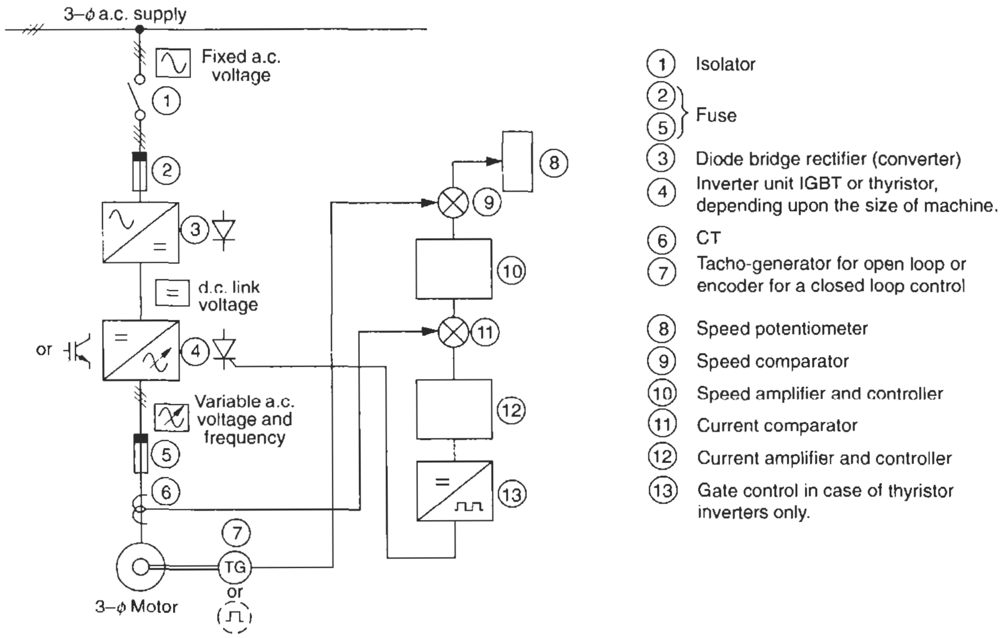

Figure 6.6 Typical block diagram of a *V/f* control scheme with open- or closed-loop control scheme

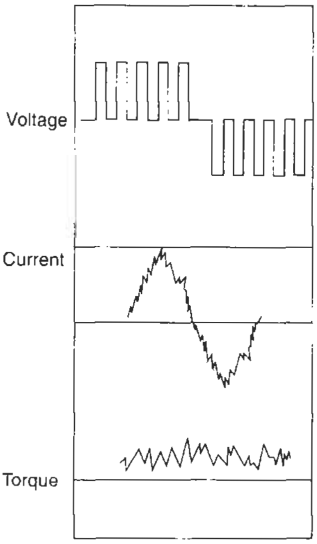

Figure 6.7(a) Approximate characteristics of vital parameters after pulse width modulation

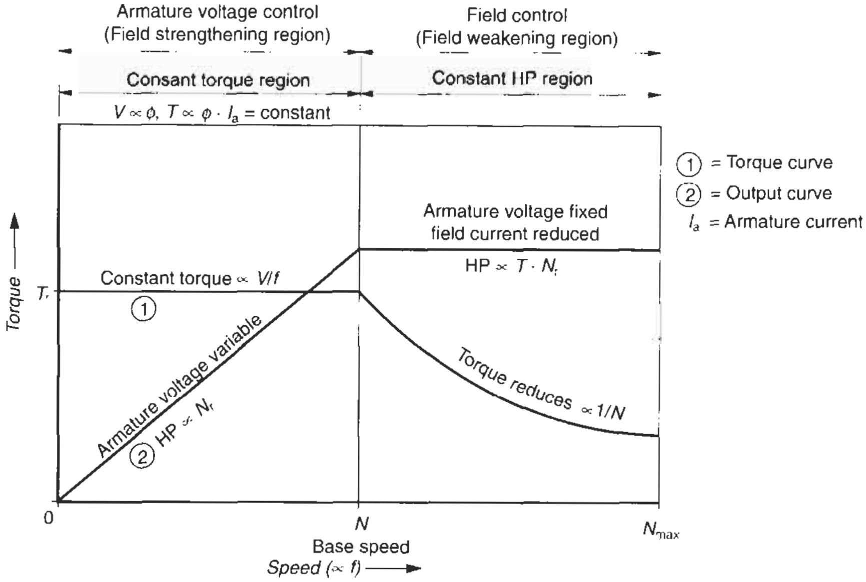

Base speed – It is normally the rated speed at which the rated parameters are referred (T_r, HP and V_r)

Figure 6.7(b) Variation of torque with speed in a d.c. machine (same for an a.c. machine)

where,

$I_a \propto T \propto V_1$ and

$I_m \propto f$

Therefore a normal V/f can also be transformed into a phasor control. $\bar{I}_a$ and $\bar{I}_m$ being torque- and flux-producing components respectively. These components are represented only theoretically. In fact they are not separate and hence the difficulty in controlling each of them more precisely.

Variation of speed beyond the base (rated) speed

See Figure 6.7(b). The machine now operates in a constant h.p. region. The frequency is raised but the voltage is kept constant at its rated value (as it should not be raised beyond rated). The flux will diminish while I_1 and also I_{rr} will remain almost the same. The torque therefore reduces so that the h.p. developed remains almost a constant (h.p. ∝ $T.N$). This is also known as the field-weakening region.

In the above schemes the two quantities (I_a and I_m) are not separated. Initially it was not easy to separate them and the whole phasor I_1 was varied to achieve a speed variation. Yet close speed control was possible but the motor's basic parameters were essential to achieve more accurate speed control. Since it may not be practical to obtain all the parameters of each motor promptly, the drive software is designed so that the name plate particulars of a motor (V, I_r, N_r, and kW) alone are enough to determine the machine's required parameters through the motor's mathematical model. The motor is calibration* run on no-load at different voltages and speeds and the drive is able to establish near-accurate vital parameters of the machine in terms of the equivalent circuit diagram shown in Figure 1.15 earlier. With these parameters known, it is now possible to achieve the required speed controls noted above. Since these parameters are fixed for a motor, the motor has to be selected according to the load duty and may require a pre-matching with the load.

Application

Such a control is good for machines that are required to operate at low speeds with a high accuracy. Now the phasor I_1, in terms of I_m, is varied according to the speed required. Figure 6.2 now changes to Figure 6.8, which is a marked improvement on the earlier characteristics. The torque variation with speed is now almost constant, except at very low speeds. The reason for poor torque at low speeds is the method of speed variation which is still based on V/f. Now a motor's mathematical model is used

---

*1 Calibration run or autotuning is a feature of the motor's mathematical model that can establish the motor parameters with its test run.

*2 If the actual motor data are available from the motor manufacturer, a calibration run will not be necessary. The motor's mathematical model can now be fed with the explicit data to achieve more precise speed control.

*3 All the motor models are implemented by microcomputer software.

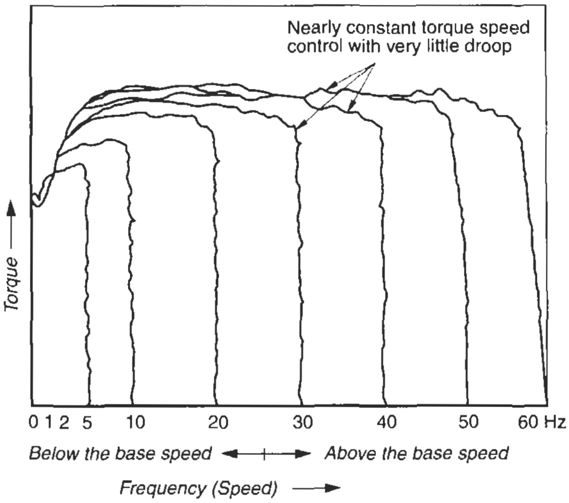

Figure 6.8 Speed–torque characteristics by flux (I_m) control (single phasor control)

to vary the speed of the machine by sensing the component, I_m, of the machine. Any variation in the actual I_m than the desired pre-set value in the inverter switching logistics is made up by the PWM technique. The field-oriented block diagram illustrated in Figure 6.12 below can be suitably simplified for I_m control. Tachogenerator or pulse encoder feedback devices can be employed to achieve higher accuracy in speed control.

With years of research and development in the field of static drives, it is now possible to identify and separate these two parameters (I_a and I_m) and vary them individually, as in a d.c. machine, to achieve extremely accurate speed control, even slightly better than in d.c. machines. In d.c. machines the armature current and the field strength are also varied independently. A.C. machines can now be used to provide very precise speed control, as accurate as ± 0.001% of the set speed, with closed-loop feedback controls. This technique of speed control is termed field-oriented control (FOC) and is discussed below.

6.4.2 Field-oriented control (FOC)

This is commonly known as double phasor or phasor (vector) control. If we analyse equation (1.1) in Chapter 1 we will observe that ϕ is a function of stator magnetizing current, I_m, and I_{rr} is a transformation of the stator active current, I_a.
Hence, equation (1.1) can be rewritten as

$$T \propto \bar{I}_m \cdot \bar{I}_a$$

Both of them are phasor quantities, and are shown in Figure 6.9. In absolute terms, they can be represented by

$$T = k \cdot I_m \cdot I_a \sin \theta \tag{6.2}$$

where θ represents the electrical position of the rotor field in space with respect to the stator. In other words, it is the phasor displacement or slip angle between $\bar{I}_m$ and $\bar{I}_a$ and will continue to vary with variation in load (torque). For instance, referring to Figure 6.9, the smaller the load I_{a1}, the smaller will be $\sin \theta_1$ and the larger the load I_{a2}, the larger will be $\sin \theta_2$. Thus to achieve a required level of speed control the stator current, I_a, field current, I_m, and phasor angle, θ, can be suitably varied. Since it is the phasor of the rotor flux (rotating field), i.e. the magnitude and its angular position with respect to the active current of the stator, which is being varied, to achieve the required speed control, this phasor control is called field oriented control (FOC). The theory of field orientation was first introduced by F. Blaschke in 1972 (see Blascke (1972) and EPE Journal (1991)). Having been able to identify the rotor field phasor it is now possible to vary this and obtain a speed control in a squirrel cage machine similar to that in a d.c. machine.

For field-oriented controls, a mathematical model of the machine is developed in terms of rotating field to represent its operating parameters such as N_r, I_a, I_m and θ and all parameters that can influence the performance of the machine. The actual operating quantities are then computed in terms of rotating field and corrected to the required level through open- or closed-loop control schemes to achieve very precise speed control. To make the model similar to that for a d.c. machine, equation (6.2) is further resolved into two components, one direct axis and the other quadrature axis, as discussed later. Now it is possible to monitor and vary these components individually, as with a d.c. machine. With this phasor control we can now achieve a high dynamic performance and accuracy of speed control in an a.c. machine, similar to a separately excited d.c. machine. A d.c. machine provides extremely accurate speed control due to the independent controls of its field and armature currents.

Different manufacturers have adopted different methods with minor changes to achieve almost the same objective. For example, field-oriented control was first introduced by Allen Bradley in the USA in 1981 and a similar technique was introduced at the same time by ABB of Finland. ABB claim their technique to be still faster in responding, as it eliminates the modulation section of

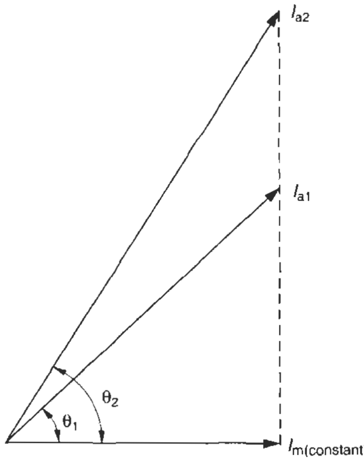

Figure 6.9 Phasor representation of field current (I_m) and stator active current (I_a)

the drive (which we will discuss later, when discussing drives), and the torque could be controlled directly. They call it direct torque control (DTC).

The phasor $\bar{I}_a$ and $\bar{I}_m$ are separated and then controlled separately as discussed later. For more precise speed control a pulse encoder feedback device can also be employed. The characteristics now improve to Figure 6.10. The torque can now be maintained constant at any speed, even at zero speed.

With different approaches to monitor and control the basic parameters of the motor, i.e. I_a, I_m and $\sin\theta$, many more alternatives are possible to achieve the required speed variation in an a.c. machine. Control of these parameters by the use of an encoder can provide an accuracy in speed control as good as a d.c. machine and even better.

To implement the FOC

The field phasor is a continuously rotating phasor in the space, whose angular position keeps changing with the position of the rotor with respect to the stationary stator. Let the rotor field displacement under the stationary condition with respect to the stator be denoted by angle β as shown in Figure 6.11. This displacement will continue to change and will rotate the rotor (field frame). All the phasor quantities of the stator are now expressed in terms of the field frame. Figure 6.11 shows these two equivalent stator side phasors transformed to the rotor frame.

I'_a = corresponding stator phasor for active current, referred to the rotor side
I'_m = corresponding stator phasor for the magnetizing current, referred to the rotor side
θ = phase displacement between the stator active and magnetizing current components
β = angular displacement of the rotor field with respect to the stationary stator at a particular instant. It will continue to vary with the movement of the rotor.

The phasor diagram would suggest that:

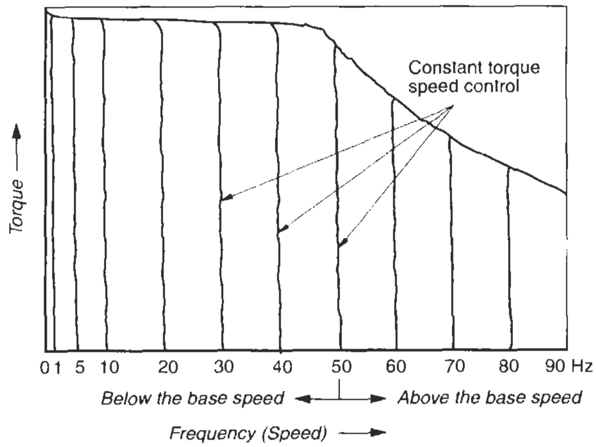

Figure 6.10 Speed–torque characteristics by field-oriented control (FOC) (flux and torque control) (Source: Allen Bradley)

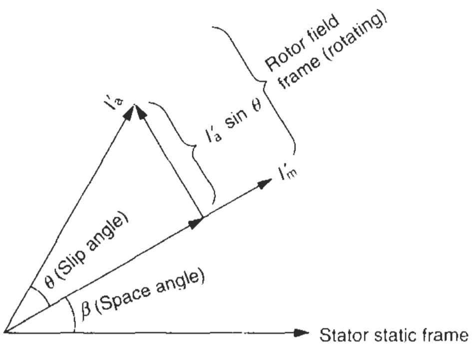

Figure 6.11 Rotor field reference frame

1 $I'_a \sin\theta$ can be regarded as the quadrature component. It is the torque component on which will depend the torque developed by the rotor. It is this component that will be varied for speed variations below the base speed, maintaining the field current constant according to the rated condition. It is similar to the armature current control in a d.c. machine.

2 I'_m can be regarded as the direct axis field component responsible for the field flux. This can be weakened (reduced) for speed variations above the base speed, which is the constant-output, constant-voltage region. Now the torque component will diminish. It is similar to the separately excited field control in a d.c. machine. Both these phasors can be regulated separately like a d.c. machine to achieve any speed variation with high precision and accuracy and provide a high dynamic performance. Leading manufacturers have developed mathematical models with microprocessors to determine the modulus and the space angle β of the rotor flux space phasor through I_a and speed. The space angle of the rotor flux space phasor is then obtained as a sum of slip angle θ and the field angle β. The slip angle θ can be calculated from the reference values I_a and I_m (an indirect method, as no sensors are used). With these parameters known, it is now possible to identify the position of the rotor flux phasor and then orientate the stator current phasor to determine the relative displacement between the two in the space, to achieve a phasor diagram as shown in Figure 6.11. The phasor diagram provides crucial parameters and must be established accurately to obtain accurate results from the control of I'_a and I'_m. The relationship between these two phasors, I'_a and I'_m, is then monitored closely and controlled by adjusting the supply parameters to the stator of the machine. The supply parameters can be controlled through a VSI (voltage source inverter) or CSI (current source inverter), which will be discussed later, depending upon the practice of the manufacturer.

The microprocessor plays the role of an electronic controller that transforms electrical quantities such as V, I and N etc. into space flux phasors, to be compared with the pre-set data. It then creates back V, I and N etc., which are the controlling variables, in terms of correction required and feeds these to the machine through a VSI or CSI to achieve the required controls.

Mathematical modelling of the machine is a complex subject and is not discussed here. For this, research and development works carried out by engineers and the textbooks available on the subject may be consulted. A few references are provided in the Further reading at the end of this chapter. In the above analysis we have considered the rotor flux as the reference frame. In fact any of the following may be fixed as the reference frame and accordingly the motor's mathematical model can be developed:

Rotor flux-oriented control – when the rotor is considered as the reference frame.
Stator flux-oriented control – when the stator is considered as the reference frame and
Magnetic field-oriented control – when the field is considered as the reference frame.

The rotor flux-oriented control is more popular among different manufacturers to achieve high precision of speed control in an induction machine. With this technology (any of the three methods noted above), it is now possible to obtain a high performance of the machine, i.e. torque up to 100% of T_r at speeds down to zero.

Since the motor's fixed parameters can now be varied to suit a particular load requirement, there is no need to pre-match a motor with the load. Now any motor can be set to achieve the required characteristics to match with the load and its process needs. Full-rated torque (T_r) at zero speed (during start) should be able to pick up most of the loads smoothly and softly. Where, however, a higher T_{st} than T_r is necessary, a voltage boost can also be provided during a start to meet this requirement. (See also Section 6.16.1 on soft starting.) The application of phasor (vector) control in the speed control of an a.c. motor is shown in a block diagram in Figure 6.12.

Application

FOC drives are capable of providing precise speed control and are used for applications calling for high performance and precision (e.g. machine tools, high-speed elevators, mine winders, rolling mills, etc.). These drives are capable of regulating a number of variables at the same instant such as speed, position, acceleration and torque.

6.4.3 Direct torque control (DTC)

This is an alternative to FOC and can provide a very fast response. The choice of a static drive, whether through a simple *V/f* control, field-oriented phasor control or direct torque control with open or closed-loop control and feedback schemes, would depend upon the size of the machine, the range of speed control (whether required to operate at very low speeds, 5% N_r and below), the accuracy of speed control and the speed of correction (response time). The manufacturers of such drives will be the best guide for the most appropriate and economical drive for a particular application or process line.

This technology was introduced by M/s ABB of Finland to achieve an extremely fast and highly accurate speed control in an a.c. machine. This is also based on phasor control, but the field orientation is now obtained without using a modulation (PWM) control circuit. The manufacturer makes use of only motor theory, through a highly accurate mathematical motor model, to calculate the motor torque directly. There is no need to measure and feed back the rotor speed and its angular position through an encoder to the motor model. The controllable variables now are only ϕ and T. It is therefore called a direct torque control (DTC) technique. There is no need to control the primary control variables V or I and N now as in a flux phasor control. This scheme eliminates the signal processing time in the absence of a PWM and also an encoder circuit, both of which introduce an element of delay. As these drives control ϕ and T directly, they respond extremely quickly and it is possible to achieve a response time as low as 1–2 ms. They are thus a corollary to the sensor-less flux control drives. For reference, a rough comparison between the various types of drives is given in Table 6.2.

Basic scheme of a DTC drive

A simple block diagram as shown in Figure 6.13 illustrates the operation of a DTC drive. It contains two basic sections, one a torque control loop and the other a speed control loop. The main functions of these two control circuits are as follows:

1 Torque control loop

Section 1
This measures

- the current in any two phases of the motor
- the d.c. bus voltage, which is a measure of the motor voltage
- the switching position of the inverter unit.

Section 2
This is a highly advanced motor model, which is first made to read and store the machine's vital parameters such as R_1, L_1, saturation coefficients and its moment of inertia during an autocalibration run. The motor is run under a locked rotor condition and the mathematical model is capable of computing its basic characteristics in terms of these parameters or any data that may be of use to actuate the control logistics. The block diagram is drawn in an open-loop condition, which would suffice for most process lines. For still higher accuracy in speed control, an encoder may be introduced into this circuit, as shown by the dotted line in Figure 6.13. The quantities measured in Section 1 are also fed into this section, which are able to compute the actual operating values of T and ϕ about every 25 μs, i.e. around 40 000 times every second. These are the output control signals of this section.

Section 3
The above actual operating data are fed into a torque

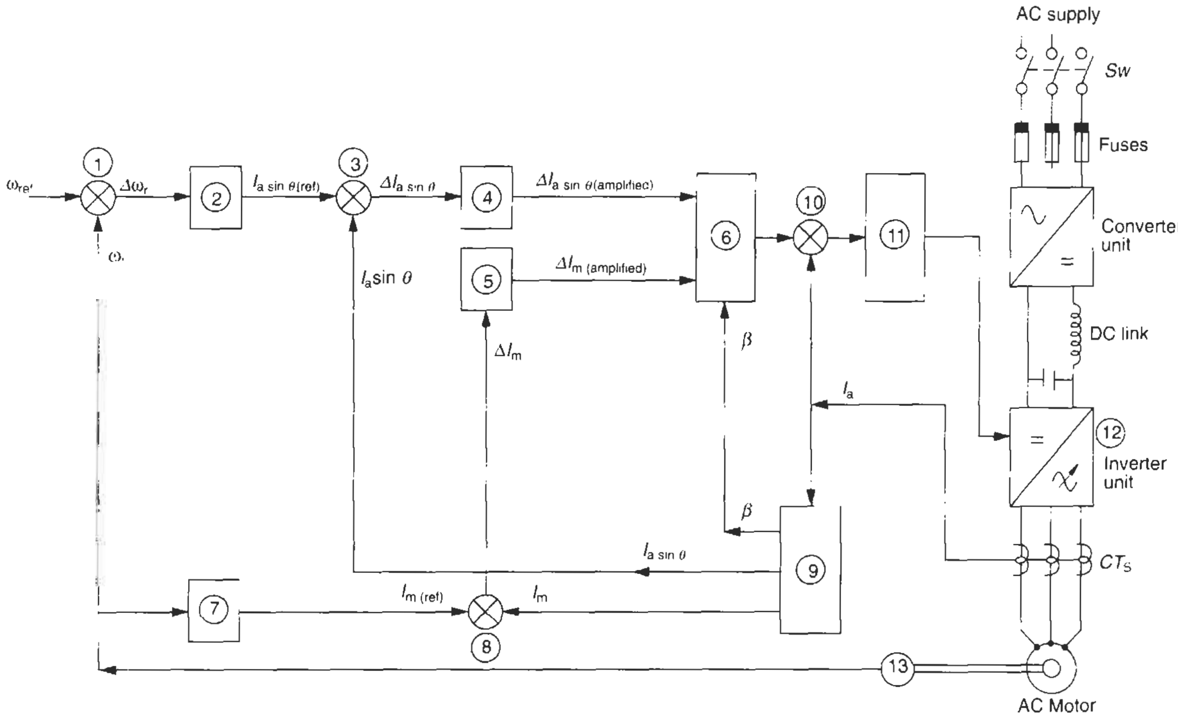

① Speed comparator: to determine the speed error ($\omega_{ref} - \omega_r$) where,
ω_{ref} = required speed reference and
ω_r = actual speed.

② Speed control amplifier to feed the reference torque data I_a sin $\theta_{(ref)}$ to the torque error detector. This is the quadrature component.

③ Current comparator: It is the torque error detector, to detect the torque component error ΔI_a sin θ ($I_a$sin $\theta_{(ref)}$ – I_a sinθ)

④ Torque error amplifier to feed the torque error to carry out the desired correction through block 6.

⑤ Field error ΔI_m amplifier.

⑥ Phasor rotator to transform the field frame coordinates to the stator frame coordinates.

⑦ Field weakening unit to command the field strength $I_{m(ref.)}$ for speed regulation above the base speed.

⑧ Field current comparator (ΔI_m) to determine ($I_{m(ref)}$ – I_m).

⑨ Motor flux mathematical model to determine prevailing I_a sin θ and I_m and also the space field displacement angle with respect to the stator 'β'.

⑩ Current comparator to compute the error between the actual line quantities and the desired quantities from block 6 and give command to the control unit 11.

⑪ Switching block controls the switching of the inverter unit to regulate its output to the preset reference line quantities.

⑫ Inverter unit.

⑬ Pulse encoder–To feed back actual speed of the motor and the angular position of the rotor with respect to the stator at a particular instant.

Figure 6.12 Block diagram for a flux-oriented phasor control

comparator and a flux comparator, which are already supplied with predefined reference data to which the machine is required to adjust. Any errors in these two data (reference and actual) are compared by these comparators at an extremely fast speed as noted above and provides T and ϕ error signals to the switching logistics of the inverter unit.

Section 4

This determines the switching pattern of the inverter unit, based on the T and ϕ error signals, obtained from the torque and flux comparators. Since these signals are obtained at very high speed, the inverter IGBTs are also switched with an equally high speed to provide a quick response and an accurate T and N.

2 Speed control loop

Section 5

This is a torque reference controller which controls the speed control output signal through the required torque reference signal and the d.c. link voltage. Its output torque reference is fed to the torque comparator (section 3).

Section 6

This is the speed controller block that consists of both a PID (proportional integral derivative, a type of programming) controller and an acceleration compensator. The required speed reference signal is compared with the actual speed signal obtained from the motor model (section 2). The error signal is then fed to both the PID controller

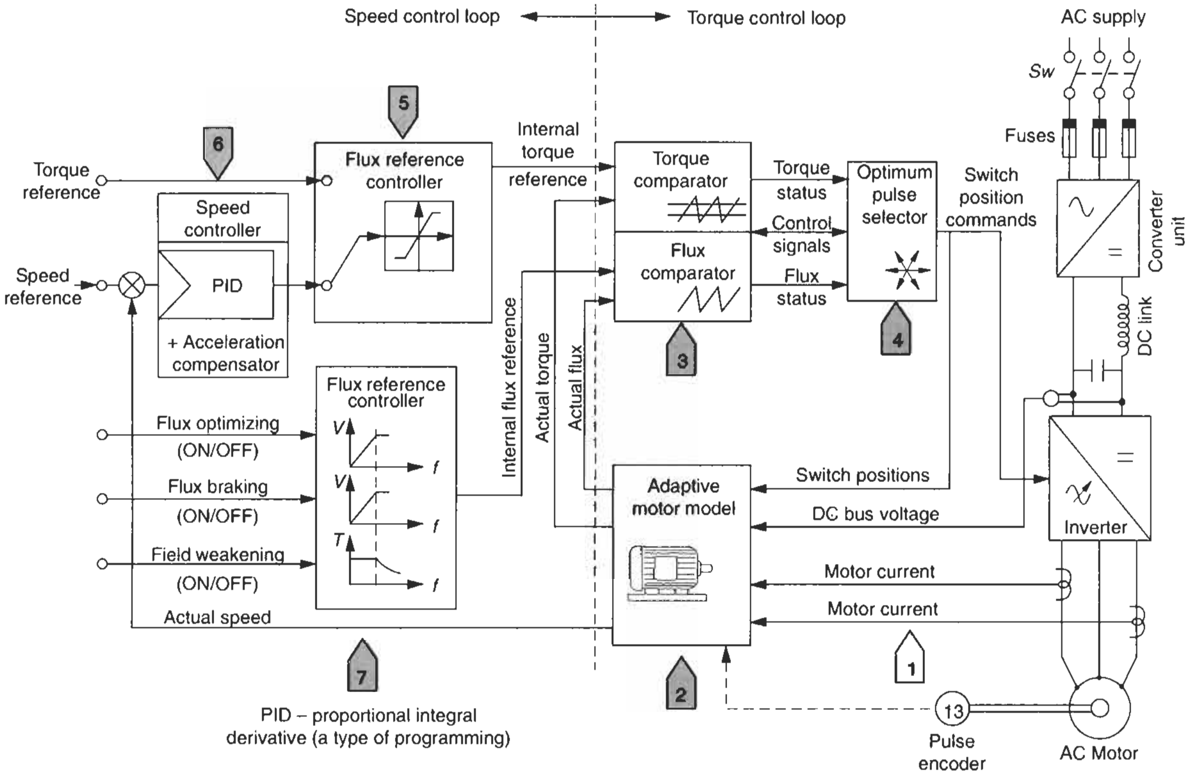

Figure 6.13 Block diagram of a direct torque control inverter circuit

Table 6.2 Comparison of conventional *V/f* control with different modes of phasor control drives

		Variable-frequency drives		*Phasor (vector) control drives*				
Serial no.	*Performance parameters*	*V/f control*		*Flux (I_m) control (single-phasor control)*	*Double-phasor (vector) or field-oriented control (FOC)*		*Direct torque control (DTC)*	
		Without encoder[a]	*With encoder*[b]	*a, c*	*Without encoder*[a]	*With encoder*[b]	*Without encoder*[a]	*With encoder*[b]
1	Response time in adjusting the speed (regulation)	200–400 ms	100–200 ms	125–250 ms	10–20 ms	5–10 ms	1–2 ms	[d]
2	Accuracy of speed control (regulation)	± 1.0%	± 0.1%	± 0.5%	± 0.5%	± 0.001%	± 0.1%	± 0.001%
3	Speed range	40:1	40:1	120:1	120:1	1000:1	100:1	100:1
4	Ability to maintain 100% rated torque at zero speed	Not possible	Not possible	Not possible	Yes	Yes	Yes	Yes
		← (Figure 6.2) →		(Figure 6.8)	←(Figure 6.10) →		← (Figure 6.10)→	

Notes

1 All values are approximate and are for reference only. For exact values consult the manufacturer.

2 All these drives are based on pulse width modulation (PWM) and hence would produce overvoltages at the inverter output and require overvoltage protection for cable lengths of 100 m (typical) and above, depending upon the steepness of the wave (Section 6.14.1).

3 The performance of the drive would also depend upon the accuracy of the motor's mathematical model used for the phasor control.

4 The choice of the type of drive would depend upon the degree of speed regulation required by the process.

[a] Open-loop controls

[b] Closed-loop controls

[c] These drives are normally open loop (sensor-less) without encoder. For higher regulation, it is better to adopt a two-phasor control, such as a field-oriented control (FOC) or a direct torque control (DTC) drive.

[d] Response time without an encoder is sufficiently low. Where response time alone is the prime consideration, the encoder is not necessary.

and the acceleration compensator. The sum of these two is the output signal that is fed to the torque reference controller (section 5).

Section 7
This is the flux reference controller which provides the absolute value of stator flux to the flux comparator (section 3). The value of this absolute flux can be varied to fulfil many functional requirements from the inverter unit such as

- Field strengthening – to obtain speed variation below the base speed
- Flux braking – to carry out braking duties
- Field weakening – to obtain speed variation above the base speed.

6.5 Use of phasor control for flux braking

It is possible to perform braking duties by the motor by raising the level of magnetization (field strengthening). By raising flux, the speed reduces (Figure 6.7(b)) and the stator current rises. This is an apparent advantage in this kind of a speed control, as the heat generated by the motor during braking appears as thermal energy in the stator rather than in the rotor. Also it is easier to dissipate heat from the stator than from the rotor due to its (stator) bulk and its outer surface, which is open to the atmosphere.

6.6 Control and feedback devices

The control and feedback circuits are also solid-state devices and offer high reliability and accuracy. The output from these devices can be interfaced with a microprocessor to carry out the required corrections in the system's parameters through the inverter controls. A microprocessor is a semiconductor device and consists of logic circuits in the form of ICs (integrated circuits), capable of performing computing functions and decision making. These capabilities are used in carrying out process corrections by providing the necessary timing and control corrective signals to the switching logistics of the inverter unit.

A microprocessor is capable of solving complex mathematical problems very rapidly and can analyse a system more closely and accurately. It can be fed with a variety of measuring and control algorithmic software that may be necessary for system monitoring and control. They are also capable of performing supervisory and diagnostic functions and carry out historical recording to store information related to process and drive conditions, to facilitate reviews of data for continuous process monitoring, fault analysis, diagnostics, trend analysis, etc.

The control logistics such as PWM or frequency controls are digital circuits and are microprocessor based. They can compare the actual inverter output parameters with pre-set reference parameters and help to implement the required precise adjustments in the system's parameters instantly by providing corrective command signals to the switching circuits of the inverter unit. This in turn adjusts the system variable parameters within the required limits by adjusting V and f as in a simple V/f control or I_m and f as in a flux phasor control, or I_a, I_m, β and f as in a field-oriented control or the torque phasor control as in a direct torque control technique etc. As a result of their accuracy and speed, they are capable of achieving prompt corrections, high reliability, better flexibility and hence a high dynamic performance of the drive.

There are many types of sensors used to feed-back the process operating conditions to the switching logistics of an inverter unit. They can be in terms of temperature, pressure, volume, flow, time or any activity on which depends the accuracy and quality of the process. Direct sensing devices used commonly for the control of a drive and used frequently in the following text are speed sensors, as noted below.

6.6.1 Speed sensors

These are closed-loop sensing devices and are mounted on the machine or a process line. They are able to sense the operating parameters and provide an analogue or digital feedback input to the inverter switching logistics. For example:

1. **Tacho generator (TG)** – This is an analogue voltage feedback device and can provide a speed input to the inverter control circuit. It provides only a low level of speed regulation, typically ± 0.4% of the set speed.
2. **Pulse encoder** – This is a digital voltage feedback device and converts an angular movement into electrical high-speed pulses. It provides speed and also the angular position of the rotor with respect to the stator field when required for field-oriented control to the inverter control circuit to achieve the required speed control. It is a high-accuracy device, and provides accuracy up to ± 0.001% of the set speed. (See the simple feedback control scheme shown in Figure 6.12.)

6.7 Application of solid-state technology

This field is very large and a detailed study of the subject is beyond the scope of this handbook. We will limit our discussions to the area of this subject that relates to the control of a.c. motors and attempt to identify the different solid-state devices that have been developed and their application in the control of a.c. motors. Only the more common circuits and configurations are discussed. The brief discussion of the subject provided here, however, should help the reader to understand this subject in general terms and to use this knowledge in the field of a.c. motor controls to achieve from a soft start to a very precise speed control and, more importantly, to conserve the energy of the machine which would be wasted otherwise. For more details of static controllers see the Further reading (Sr. nos. 2, 4, 5, 8 and 12) at the end of the chapter. To bring more clarity to the subject, passing references to a d.c. machine are also provided. To make the discussion of static drives more complete different configurations of converter units are also discussed for the control of d.c. motors.

In the past five decades solid-state devices such as diodes, transistors and thyristors have attained a remarkable status and application in the field of electronic power engineering. Diodes and thyristors were introduced in the late 1950s, while the basic transistor (BJT – bipolar junction triode) was introduced in 1948. In India they appeared much later (thyristors were introduced in the 1970s and power transistors in the 1980s). This technology is now extensively applied to convert a fixed a.c. power supply system to a variable a.c. supply system, which in turn is utilized to perform a required variable duty of a fixed power system or a machine. They are all semiconductor switching devices and constitute two basic families, one of transistors and the other of thyristors. The more prevalent so far is discussed here to give readers an idea of the use of this technology in today's domestic and industrial applications, power generation, distribution and their controls etc.

More emphasis is provided on the control of induction motors. Research and development in this field is a continuous process and is being carried out by agencies and leading manufacturers. This aims to advance and optimize the utility of such devices by improving their current-handling capability and making them suitable for higher system voltages, switching speeds etc. There may be more advanced versions available by the time this book is published and readers should contact the leading manufacturers for details of the latest technology.

Diodes are purely static power switching devices and are used extensively with thyristor and transistor power schemes. Transistors are relatively cheaper and easy to handle compared to thyristors. The latter are more expensive and more complex as noted below. This text deals with the application of such devices for the control of induction motors, which can now be employed to perform variable duties through its stepless speed control by close monitoring of load requirements during a particular process or while performing a specific duty cycle. The controls are assisted by microprocessor-based, open- or closed-loop control techniques, which can sense and monitor many variables such as speed, flow of material, temperature, pressure or parameters important for a process or a duty cycle. With these techniques, it is possible to achieve any level of automation. Open-loop systems are used where high accuracy of controls and feedback is not so important and closed-loop where a high degree of accuracy of control is essential. With solid-state technology it is now possible to utilize a conventional machine to perform a variable duty. Transistors so far have been developed to handle currents up to 2000 A and voltages up to 1200 V and are utilized for low-capacity power requirements. Thyristors have been developed up to 3000 A and voltages up to 10 kV and are employed for large power requirements such as HV d.c. transmission and static VAr controls. With the variety of such devices and their number of combinations, it is possible to achieve any required output variation in V and f of the fixed a.c. input supply or I_a and I_m (phasor control) in the machine's parameters and use these to perform a required duty cycle with very precise speed control.

6.7.1 Power diodes

These are unidirectional* and uncontrollable† static electronic devices and used as static switches and shown in Figure 6.14. A diode turns ON at the instant it becomes forward biased and OFF when it becomes reverse biased. By connecting them in series parallel combinations, they can be made suitable for any desired voltage and current ratings. Whether it is a transistor scheme or a thyristor scheme, they are used extensively where a forward conduction alone is necessary and the scheme calls for only a simple switching, without any control over the switching operation. They are used extensively in a rectifier circuit to convert a fixed a.c. supply to a fixed d.c. supply.

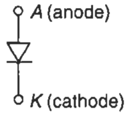

Figure 6.14 Circuit symbol for a power diode as a switch

6.7.2 The power transistor family

The solid-state technology in the field of transistors in particular has undergone a sea-change, beginning in the 1950s from the basic bipolar junction transistor (BJT) to the more advanced insulated gate bipolar transistor (IGBT) by the 1990s. The following are some of the more prominent of the power transistor family that are commonly used in power circuits.

Bipolar junction transistors (BJTs)

These are the basic transistors (triodes) and are illustrated in Figure 6.15. They are unidirectional and controllable and are capable of handling large currents and high voltages and also possess high switching speeds (faster than thyristors). However, they require a high base current due to the high voltage drop across the device, which causes a high loss and dissipation of heat. This adverse feature of their characteristics renders them unsuitable as power switching devices for efficient power conversion. Therefore they are generally used as electronic control devices rather than power devices in electronic control circuits and are not produced at higher ratings.

Two-junction transistors or power Darlingtons

These also have three terminals as illustrated in Figure

---

* A unidirectional switch is one that can conduct in only one direction and blocks in the reverse direction.

†A controllable switch is one that can be turned ON and OFF by switching a control circuit ON and OFF.

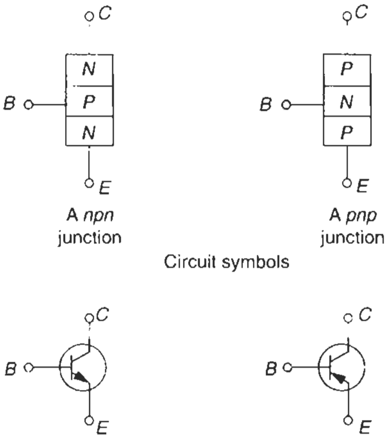

Electrical representation
B base
E emitter
C collector
(*Note* A diode has only one *p–n* junction)

Figure 6.15 Circuit symbols and electrical representation of a basic triode or power transistor (BJT)

6.16. They are fabricated of two power transistors and are used as a single transistor and are suitable only for control circuits. They are used to reduce the control current requirement and hence cause lesser heat dissipation, particularly during switching operations.

MOSFETs

These are metal oxide semiconductor field effective transistors and are shown in Figure 6.17. They are capable of switching quickly (but are more sluggish than BJTs) and handle higher switching frequencies. But they can deal with only lower currents and withstand lower voltages and thus possess a low power-handling capability. They are bi-directional and can operate as controlled switches in the forward direction and uncontrolled switches in the reverse direction. MOSFETs are composed of a diode and a BJT or IGBT in anti-parallel. They are voltage-controlled devices and require a negligible base current at their control terminals to maintain the ON state and hence are low-loss devices. MOSFETs are used extensively as fully controllable power switches, where they are required to handle only low powers. The latest trend is to use them only as control devices.

The power BJTs and power MOSFETs have provided two very useful static switching devices in the field of transistor technology. But while the former can handle larger powers, they dissipate high heat, the latter poses a limitation in handling large powers. As a result of these shortcomings, they are used mostly as control circuit switching devices. Such limitations were overcome by yet another development in the 1990s, in the form of an IGBT.

Insulated gate bipolar transistors (IGBTs)

These are unidirectional transistors and have an insulated gate (G) instead of the base (B) as in a bipolar transistor (BJT) and are represented in Figure 6.18. They are a hybrid combination of a *pnp* bipolar transistor which is connected to a power MOSFET like a two-junction transistor (power Darlington, Figure 6.16). A positive voltage between the gate and the emitter switches ON the MOSFET and provides a low resistance effect between the base and the collector of a *pnp* bipolar transistor and switches this ON as well. The combination of two transistors offers an insulated gate that requires a low base current which makes it a low-loss device. When the voltage between the gate and the emitter is reduced to zero, the MOSFET switches OFF and cuts off the base current to the bipolar transistor to switch that OFF as well. With slight modification in construction and upgrading the bipolar and MOSFET transistors, it is possible to produce a low-loss IGBT, suitable for fast switching, handling large currents and withstanding higher voltages. Present ratings have been achieved up to 1600 V and 2000 A, but ratings up to 600A are preferred, due to their easy handling and making power connections. In higher ratings, because of their small size, they may pose a problem in making adequate power connections, proper handling, thermal stability, adequate protection etc.

The development of this hybrid combination in a bipolar transistor has greatly enhanced the application of power transistors in the field of power conversion and variable-speed drives. It possesses the qualities of both the power bipolar transistor (BJT) and the power MOSFET. Like a power MOSFET, it is a voltage-controlled switching device

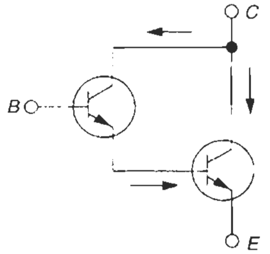

Figure 6.16 Circuit symbol for a two-junction transistor or power Darlington

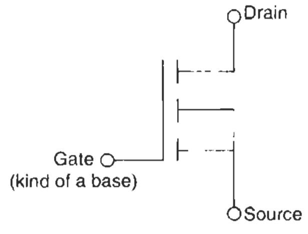

Figure 6.17 Circuit symbol for a power MOSFET

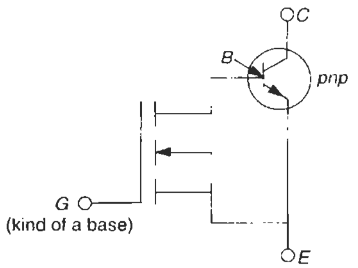

Figure 6.18 Circuit symbol for an IGBT

that permits fast switching and gate voltage control and as a bipolar transistor it allows a large power handling capability. The switching speed of the IGBT is also higher than that of a bipolar transistor. It thus provides an efficient power conversion system. With gradual and consistent development of their design, it has been possible to achieve higher ratings of these devices. Presently single IGBT units have been used to handle power up to 650 kW or so. Their series-parallel combination, that initially created limitations as a result of their complex switching, is also being overcome and it is hoped that much larger ratings from such devices will be possible in the near future. They are used extensively in an inverter circuit to convert a fixed d.c. supply to a variable a.c. supply. Since they are more expensive compared to power diodes, they are not used generally in a rectifier circuit where power diodes are mostly used. However, when the power is to be fed back to the source of supply, then they are used in the rectifier circuit to adjust *V* and *f* of the feedback supply to that of the source.

With this development, thyristor technology is now being applied to handling large to very large power requirements, where there is no option but to use thyristors alone, for example, for very large motors, reactive power controls etc., as discussed in Section 24.10. A typical inverter circuit using IGBTs is illustrated in Figure 6.19. In addition to being suitable for high switching frequencies, these transistors virtually retain the sinusoidal waveform of the motor currents. The motor current now contains lesser harmonics, and causes less heating of the motor windings. It also causes less pulsation in torque and low motor noise. The motor also runs smoother, even at lower speeds. Now *V* and *f* can both be varied through this single device and a fixed voltage power diode bridge rectifier is sufficient to obtain a fixed d.c. voltage, rather than to use a phase-controlled thyristor rectifier to obtain a variable d.c. voltage.

However, they may generate switching surges. Although moderate, they have caused failure of motor insulation in some cases. Depending upon the type of installation, a surge protection, in the form of d*v*/d*t* protection through chokes, may become mandatory with such drives, particularly when the cable length from the drive to the motor is too long or when the motor is rather old and may not possess a sound dielectric strength. More details of this aspect are discussed in Section 6.14.

MOS controlled thyristors (MCTs)

The latest in the field of static devices are MOS-controlled thyristors (MCTs), which are a hybrid of MOSFETs and thyristors. There is yet another device developed in this field, i.e. insulated gate-controlled thyristors (IGCTs). Implementation of these devices in the field of static drives is in the offing.

6.7.3 The thyristor family

The thyristor is a semiconductor device made of germanium or silicon wafers and comprises three or more junctions, which can be switched from the OFF state to the ON state or vice versa. Basically it is a *pnpn* junction, as shown in Figure 6.20(a) and can be considered as composed of two transistors with *npn* and *pnp* junctions, as illustrated in Figure 6.20(b). It does not turn ON when it is forward biased, unlike a diode, unless there is a gate firing pulse. Thyristors are forced commutated (a technique

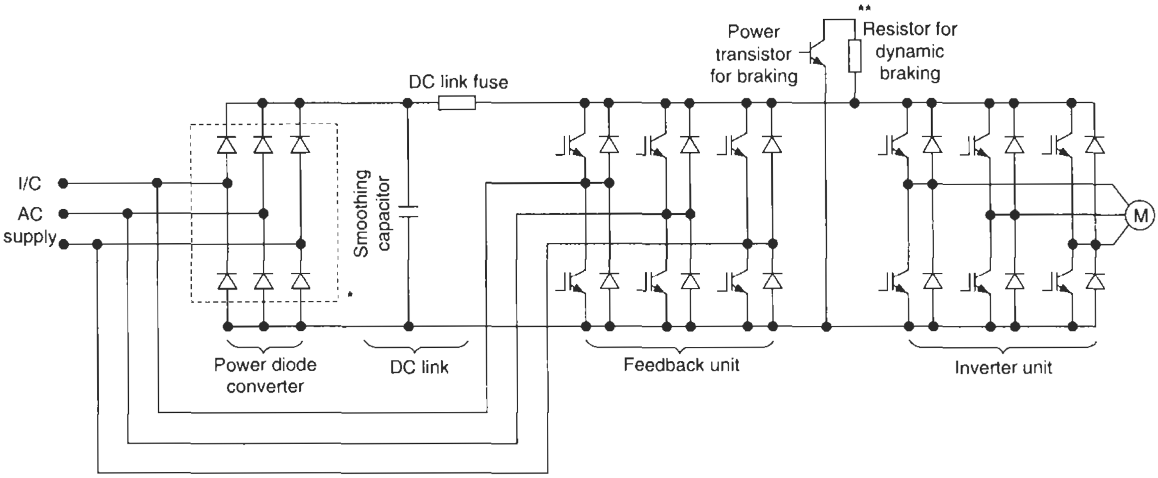

* Uncontrolled line side diode bridge rectifier. When a variable d.c. is required, it can be replaced by thyristors.

** Mechanical braking or non-regenerative braking:
For small brake power, resistance unit is small and can be located within the main enclosure. But for higher power that may call for large resistance units and have to dissipate excessive heat, it is mounted as a separate unit. The resistance units are short-time rated depending upon the duty they have to perform.

Figure 6.19 A typical inverter circuit using IGBTs, also showing a feedback unit

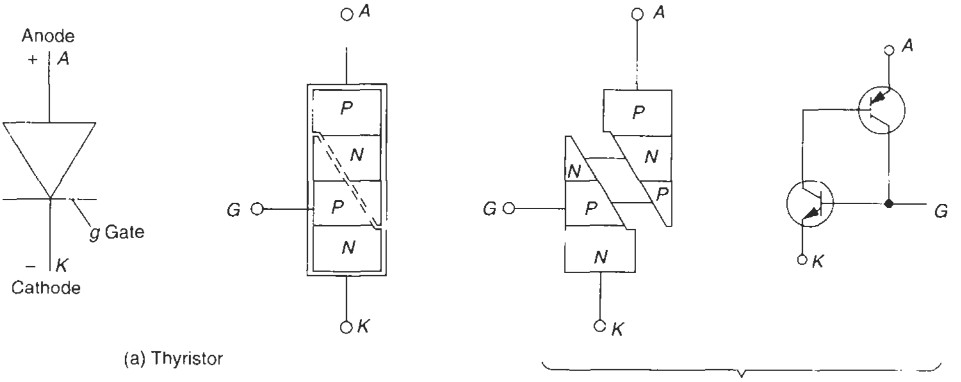

(a) Thyristor

(b) Equivalent 2-transistor representation

Figure 6.20 A basic thyristor [silicon controlled rectifier (SCR)]

for switching OFF) and hence call for a complex circuitry, more so in a 3-ϕ system, where six of them have to operate simultaneously. The control device has to be very accurate to trigger all the thyristor devices at the same instant and a slight error in the firing angle may cause a short-circuit, whereas a transistor can be switched OFF simply by removing the base signal. Thyristors are therefore also known as phase-controlled rectifiers. The phase angle delay is known as the firing angle of the switching element. In this book we have denoted this angle by α. For diodes $\alpha = 0$, while for thyristors it can be adjusted as illustrated in Figure 6.23. We will not go into more detail on the construction of this device and will limit our discussion only to its application in a power system. The device constitutes a large family, but only the more prevalent of them are discussed here, i.e.

- Silicon-controlled rectifiers (SCR). These are basically thyristors and unless specified, a thyristor will mean an SCR
- Triacs
- Gate turn-off switches (GTO)
- MOS-controlled thyristors (MCTs) and insulated gate-controlled thyristors (IGCTs) (discussed in Section 6.7.2).

Silicon-controlled rectifiers (SCRs)

The most popular of the thyristor family is the SCR, which was first developed in 1957 by General Electric, USA. The SCR is similar in construction to that of a junction diode, except that it has three junctions instead of one, and a gate to control the flow of power. The SCR is commonly represented as shown in Figure 6.20(a) and can be regarded as a semiconductor switch, similar to a toggle switch. An SCR is unidirectional and conducts in one direction only and can also be termed a reverse blocking triode thyristor. When anode A is positive with respect to K, it is in the conducting mode and is termed forward biased. The V–I characteristics are similar to those of a semiconductor diode, as shown in Figure 6.21. When K is positive with respect to A, it is in the non-conducting mode and conducts a very low leakage current. In this mode it is termed reverse biased. In this condition, when the reverse voltage is raised a state is reached when the low-leakage reverse current increases rapidly as a result of the dielectric breakdown. This stage is called the reverse avalanche region (Figure 6.21) and may destroy the device.

When a load and a power source is connected across the anode and the cathode of the SCR, there will be no conduction and no current will flow, even when the anode is made positive with respect to the cathode unless the gate is also made forward biased with the application of a positive potential at the gate. After the conduction commences, the gate potential can be removed and the

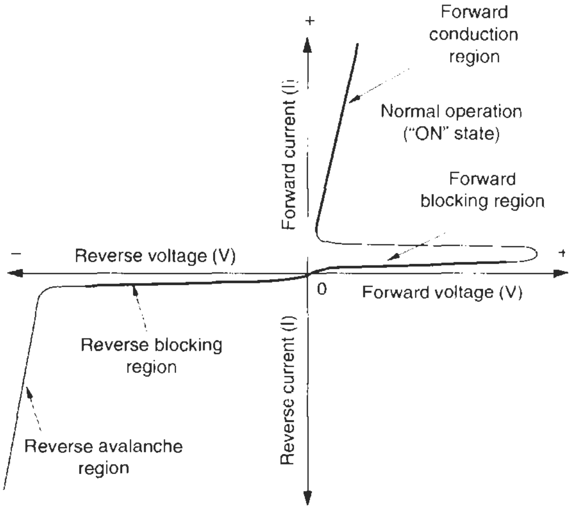

Figure 6.21 V-I characteristics of a thyristor (SCR) without a gate voltage

device will continue to conduct. It is the gate signal that plays the most vital role in achieving the desired variation in the voltage. The main power connections to the device are made to its terminals A and K and a turn-on signal is applied between the gate and K. An SCR can easily provide a variable voltage source by varying its firing angle. In view of its simplicity, it is the most commonly used thyristor in a phase-controlled rectifier unit (converter). Gate control is now simple, as it is connected on the a.c. or the line side, which provides it with a natural commutation. The thyristor gets switched OFF at every current zero. This may therefore also be termed a line commutated rectifier.

The use of SCRs in an inverter circuit is intricate because of the absence of a natural commutation. Now only a forced commutation is possible, as it is connected to a d.c. source which provides no current zeros and hence facilitates no natural commutation. A forced commutation calls for a separate switching circuit, which is cumbersome, besides adding to the cost. As a result of this feature, they are also called forced commutated thyristors.

Triacs

Unlike an SCR, which is unidirectional, a triac is a bidirectional thyristor switch and conducts in both directions. It can be considered as composed of two SCRs, connected back to back with a single gate, as shown in Figure 6.22(a). Since the thyristor now conducts in both directions there is no positive (anode) or negative (cathode) terminals.

The triac may, however, have some limitations in handling frequencies higher than normal. In such cases, they can be simulated by using two SCRs in inverse parallel combinations as illustrated in Figure 6.22(b). Now it is known as a reverse conducting thyristor. An SCR has no frequency limitations at least up to ten times the normal. The required voltage and current ratings are obtained by series-parallel connections of more than one thyristor unit.

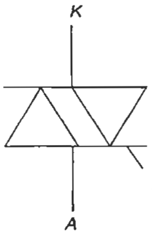

Figure 6.22(a) Schematic representation of a triac

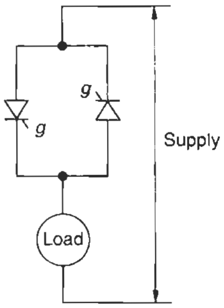

Figure 6.22(b) Use of two SCRs in inverse parallel combination to simulate a triac (reverse-conducting thyristors)

Gate turn-off switches (GTOs)

The gate can only turn the thyristor ON but it cannot turn it OFF (commutate). Switching OFF can be accomplished only by reducing the conducting current to less than the thyristor's holding current. A device that allows the gate to switch OFF is called the gate turn-off switch (GTO) or gate control switch (GCS). The GTO turns it OFF by firing (applying) a negative potential between the gate and the cathode. It is the most commonly used device in a thyristor inverter circuit.

6.8 Conduction and commutation

A thyristor can be turned ON by the gate at any angle α, with respect to the applied voltage waveform as shown in Figure 6.23(a) and (b) for half-wave and full-wave controlled rectifiers respectively. By varying the firing angle, which is possible through the firing circuit, the d.c. output voltage through a converter circuit can be varied, as illustrated in the figure. The voltage is full (maximum) when the firing angle is zero. Now the conduction angle is 180°. As the firing angle increases, the conduction angle decreases and so does the output voltage. The output voltage becomes zero when the firing angle becomes 180° and the conduction angle becomes zero. Thus the conduction, i.e. the power through a thyristor, can be varied linearly by varying the gate voltage and its firing angle. Such control is termed phase control, and a rectifier or converter unit, employed to convert a.c. to a variable d.c., is called a controlled rectifier or a controlled converter.

In thyristor technology the switching OFF of a thyristor is conventionally termed commutation. In a.c. circuits, when the current through a thyristor passes through its natural zero, a reverse voltage appears automatically and turns OFF the thyristor. This is a natural commutation. No external circuit is now required to turn OFF the thyristor. They are therefore commonly called line commuting thyristors, like those used for a.c.–d.c. converters. But this is not so in d.c. circuits, as the current wave now does not pass through a natural zero. The forward current can now be forced to zero only through some external circuit to turn the thyristor OFF. This is termed forced commutation, such as when used for d.c.–a.c. inverters. Unlike a thyristor, a transistor can be switched OFF simply by removing the base signal and it requires no separate circuit to switch it OFF. In Table 6.3 we show a brief comparison between transistor devices and the basic thyristor (SCR). The triacs and GTOs and other thyristor devices fall in the same family, but with different features of conduction and commutation to suit different switching schemes. Other important characteristics are also shown in the table.

6.9 Circuit configurations of semiconductor devices

Semiconductor devices, as noted above, are used widely

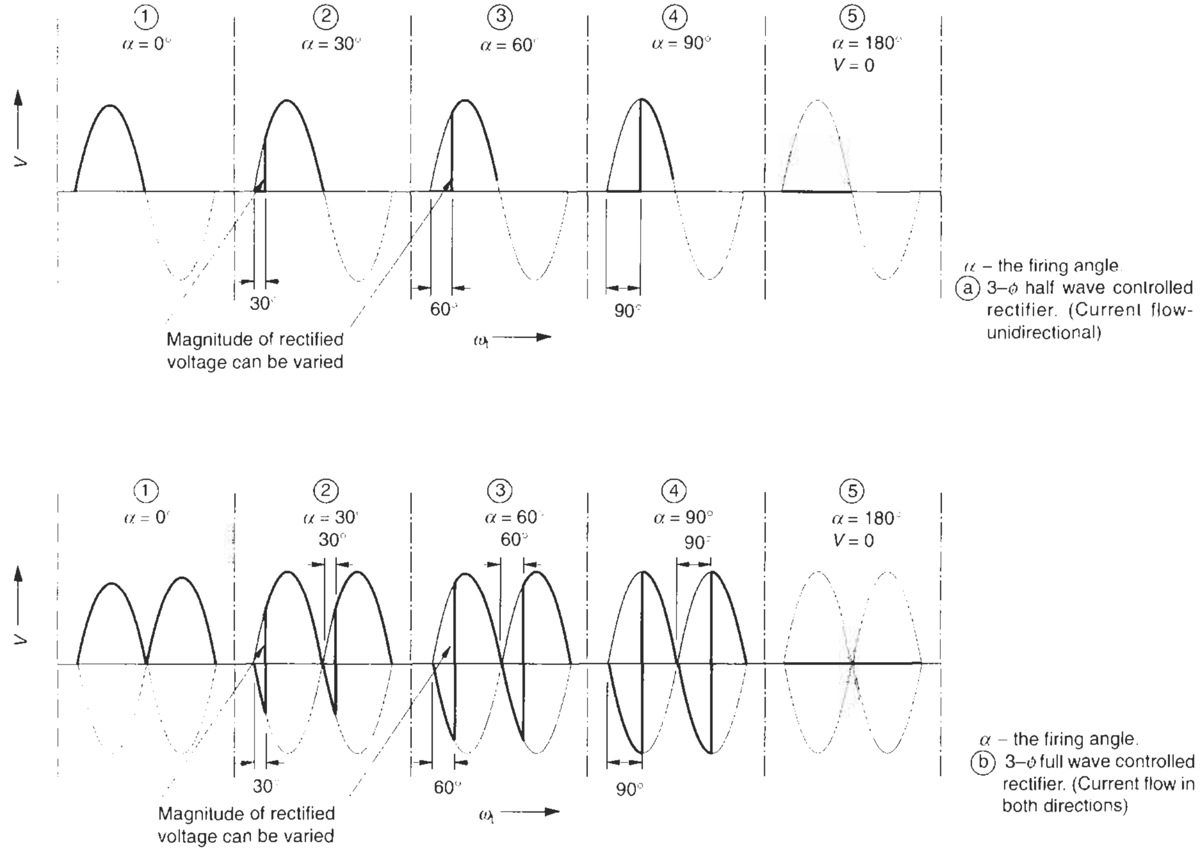

Figure 6.23 Phase control of voltage through different gate firing angles

to convert a fixed a.c. supply to a fixed or variable d.c. supply, and then from a fixed d.c. supply to a variable a.c. supply, for example, for variable a.c. drives. A variable d.c. supply is used for the variable d.c. drives. The conventional nomenclature to identify the various types of these circuits and their applications is

- Converter or rectifier unit
- Inverter unit

6.9.1 Converter or rectifier unit

A converter unit is used for the control of d.c. machines and also to provide a d.c. source to an inverter unit controlling an a.c. machine. In d.c. drives the d.c. voltage after the converter unit should be variable, whereas for an a.c. drive it is kept fixed. The voltage is varied by the inverter unit. A converter unit is the basic power conversion scheme to convert an a.c. supply to a d.c. supply. Conventionally they are also known as rectifier units and can be arranged in four different modes to suit different applications of a motor as follows:

1 *Uncontrolled rectifier units* These can be

- Half wave similar to Figure 6.24(a) configurations (b) and (c), using one diode per phase instead of a thyristor, or
- Full wave similar to Figure 6.24(a) configuration (a), using two diodes in anti-parallel per phase instead of thyristors or in the form of a centre-point configuration.

2 *Controlled rectifier units* These can also be

- Half wave (Figure 6.24(a)), configurations (b) and (c) using one thyristor per phase or
- Full wave (Figure 6.24(a)), configuration (a), using two thyristors in anti-parallel per phase or in the form of a centre-point configuration.

Note A half-wave rectifier is a single-bridge rectifier and is suitable for only single-quadrant operations I or III. A full-wave rectifier is a double-bridge rectifier and suitable for multi-quadrant operations particularly quadrants II and IV. See Table 6.4.

Table 6.3 A brief comparison between a transistor and basic thyristor technology

Parameters	Transistor technology					Thyristor technology				
1 As a static switch	Type of switch	Unidirectional	Bi-directional	Controllable	Uncontrollable	Type of switch	Unidirectional	Bidirectional	Controllable	Uncontrollable
	Power BJT and power Darlington	✓	–	✓	–	SCR	✓	–	✓	–
	Power MOSFET	–	✓	Controllable in forward and uncontrollable in reverse direction		GTO TRIAC	✓ –	– ✓	✓ Controllable in both directions	–
	IGBT	✓	–	✓	–	Reverse conducting thyristor	–	✓	Controllable in both directions	–

Note The above switching devices by themselves or in conjunction with power diodes can be developed into a variety of new devices to suit any power conversion and control application. MCTs and IGCTs are a few such hybrid devices. For more details refer to the literature on the subject in the Further reading.

Parameters	Transistor technology	Thyristor technology
2 Switch OFF characteristics	This calls for no switching OFF circuitry, since a transistor can be switched OFF simply by removing the base signal.	Once fired, a thyristor cannot be controlled. It requires a forced commutation to switch it off and the gate control is quite cumbersome. To switch OFF, the conducting current is reduced to less than its holding current. The commutation circuitry is therefore highly complex and also influences the reliability of a thyristor application.
3 Controls	These require only the base signal to switch ON. Thus provide a simpler technology.	There are six thyristor firing circuits required for a 3ϕ system, as there are two thyristors connected back to back each phase. The whole scheme is therefore complex and less reliable.
4 For conduction in both directions	Generally two circuits are used	These can be connected in anti-parallel
5 Switching frequency	Power MOSFETs and IGBTs can handle much higher switching frequencies, compared to a thyristor. In an a.c. motor control, fast switching is mandatory and therefore transistors are preferred.	Very low switching frequency, but a GTO is suitable for frequent switchings.
6 Rating	(a) Can handle only moderate currents and voltages. A BJT is used mostly in electronic control circuits. As they are small, hundreds can be placed on a small PCB (printed circuit board). Some manufacturers, however, also use them for the control of small motors, say, up to 10 15 HP. (b) MOSFETs and IGBTs alone are used for power applications. Rating of single-piece IGBT is possible up to 650 kW after considering all possible deratings. Typical V and I ratings for a single unit achieved so far are $V \simeq 1600\ \text{V}^a$ $I \simeq 2000\ \text{A}^a$	Can handle much larger powers. Typical V and I ratings for each unit achieved so far are $V \simeq 10\ \text{kV}^a$ $I \simeq 3000\ \text{A}^a$
	[a] Subject to applicable deratings. These ratings can be enhanced by connecting them in series-parallel combinations. In series to enhance the voltage rating and in parallel to enhance the current rating. But the controls may not be so accurate as with a single device.	
7 To vary V and f	Both V and f can be varied with the help of pulse width modulation (PWM) in the inverter circuit. The converter unit normally is an uncontrolled power diode rectifier.	By varying the gate firing angle, V can also be varied. With SCRs frequency variation is not possible. *Note* Since an inverter is not line commutated, the SCRs have a switching limitation and hence a limitation in frequency variation. When thyristors are to perform frequent switchings, GTOs are used in the inverter circuit.
8 Heating effect	Low heat dissipation due to low voltage drop across the device (up to 1 V only)	This device has a high voltage drop across it (up to 3 V) and therefore generates excessive heat and poses a cooling problem, particularly for large systems, which may even call for an external cooling arrangement.
9 Cost factor	Much more economical compared to a thyristor drive in this range.	In smaller ratings they are economical. In an a.c. to d.c. converter, for instance, for the control of a d.c. motor, where a variable d.c. voltage is desirable, SCRs are used extensively and the voltage variation is obtained by varying the firing angle. Since the SCRs are now line commutated, they pose no switching OFF problem.

The uncontrolled rectifier units are simple rectifiers and use power diodes universally. The rectification obtained is uncontrollable and provides only a fixed d.c. voltage output from a fixed a.c. supply. The diodes have no control over their switching instants. These rectifier units are used extensively to provide a fixed d.c. source to an inverter unit when being employed to control an a.c. machine. Since there is no switching of diodes involved, there are no voltage surges across the diodes. There is thus no need to provide a snubber circuit across the diodes to protect them against such surges, as discussed later.

When, however, a variable d.c. voltage output is required, controlled rectifiers are used. Now the diodes are replaced by one or two phase-controlled thyristors (SCRs) in each phase, one thyristor per phase for a half wave and two per phase in anti-parallel for a full wave rectification. The required voltage variation is achieved by adjusting the delay time of the gate-firing pulse (α) to each thyristor unit. Thyristor circuits are possible up to any rating by arranging them in series-parallel combinations. With the advances in this technology, it is possible to achieve a total matching of switching sequences of all the thyristors to ensure an accurate and fully cohesive operation (switching of all thyristors at the same instant). Unlike diode, a thyristor does not turn ON automatically at the instant it becomes forward biased but requires a gate pulse at its gate terminal to switch it ON. This is obtained through a control circuit which is a part of the rectifier unit. The gate-firing pulse is provided at the appropriate instant to each thyristor in each switching cycle, positive half to negative half, to obtain the required voltage. The switching is automatic as the thyristors are line commutated and at each half cycle the voltage waveform passes through its natural zero. The instants may be delayed from 0° to 180° electrical to obtain the required infinite control in the output supply, as illustrated in Figure 6.23(b). The d.c. output is controlled by adjusting the delay time of the gate-firing pulse. A few voltage waveforms are illustrated in Figure 6.23(b) at different firing angles. Phase control of positive and negative half waves of each phase can be infinitely varied to meet any power demand.

A half-wave rectifier is able to provide only a unidirectional d.c. power source which may also contain many a.c. ripples (Figure 6.24(a)). A full-wave rectifier is employed to reduce such ripples, on the one hand, and provide a d.c. power in forward as well as reverse directions, on the other. A fixed forward and reverse d.c. power is required for an inverter unit when it is employed to control an a.c. machine. Now an uncontrolled rectifier unit is adequate as V and f control is obtained through the inverter unit.

A controlled rectifier unit is necessary when it has to control a d.c. machine, which would call for a variable d.c. voltage. When the d.c. machine has to operate in only one direction (quadrants I or III) a half-wave controlled rectifier will be adequate and when the machine has to operate in either direction, a full-wave controlled rectifier will be essential.

For operations in quadrants II and IV it is essential to have an unrestricted flow of reverse power and hence an additional feedback inverter unit would also be essential, as shown in Figures 6.31–6.33, depending upon the configuration of the converter unit.

Note It is possible that at some locations there is no a.c. source available, such as for battery-operated lifts and motor vehicles. Such applications may also call for a variable d.c. source. When it is so, it can be achieved with the use of a chopper circuit which uses the conventional semiconductor devices. The devices are switched at high repetitive frequencies to obtain the required variation in the output voltage as with the use of a phase-controlled thyristor rectifier. A typical chopper circuit is shown in Figure 6.25, using diodes and a controlled unidirectional semiconductor switch, which can be a thyristor or an IGBT.

Relevance of different quadrants of a converter unit

Depending upon the mode of operation of a motor, the type of converter unit can be decided. For simplicity, the operation (conduction) of a motor can be represented by four quadrants as illustrated in Table 6.4.

- **Quadrant I** Both V and T are positive. The machine can be run only in one direction (say, forward). Braking operations are possible. It is a converter mode and either a half-wave or a full-wave rectifier can be used.
- **Quadrant II** Now T is in the reverse direction and the machine can be run in the reverse direction. Braking and regeneration are possible. For regeneration an additional bridge will be essential as discussed later. For current to flow in either direction, a full-wave rectifier will also be essential.
- **Quadrant III** Now both the voltage and the torque are in the reverse direction otherwise it is similar to Quadrant I. The machine can now be run in the reverse direction.
- **Quadrant IV** Now the voltage alone is in the reverse direction and the machine can be run in the forward direction. Braking and regeneration are possible. The machine in the forward direction can generate, when it is brought down from a higher speed to a lower speed or when feeding a load going down hill etc. For regenera-tion, an additional bridge will be essential as noted above, and for the current to flow in either direction, a full-wave rectifier.

The changeover from motoring to regeneration, i.e. from Quadrant I to Quadrant IV or from Quadrant III to Quadrant II or vice versa, is achieved by first bringing the torque to zero by ceasing the firing of one bridge and commencing that of the other.

6.9.2 Inverter unit

The purpose of an inverter unit is to invert a fixed d.c. power to a variable a.c. power which can be achieved in two ways:

1 *Using IGBT devices* These are the latest in the field of static power control. They are easy to handle and

Comparison of a few common thyristor rectifier converter circuits

Thyristor configuration	*Winding arrangement and thyristor* ① *rectifier configuration*	*No. of phases (pulse number, n and voltage phasor)*
(a) Bi-phase (Single phase centre point) (Full wave rectifier)	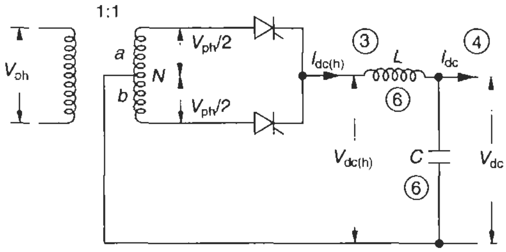	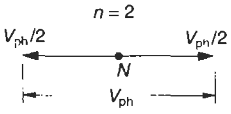
(b) 3-phase, (Half wave rectifier)	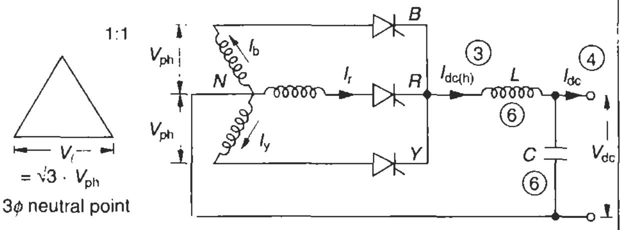	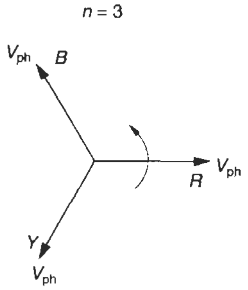
(c) 6-phase ⑤ (Half wave rectifier)	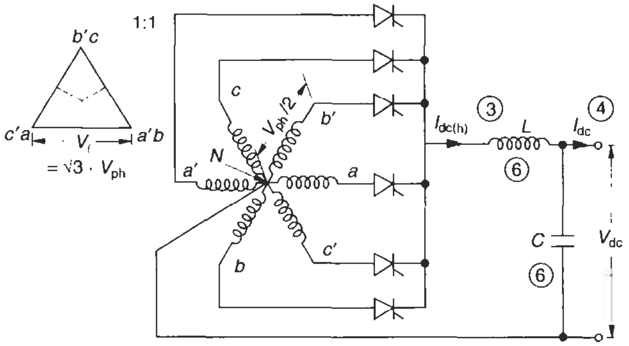	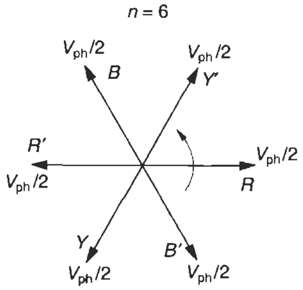

Notes (1) Considering the firing angle ∝ = 0, the values are same for power diodes also.

(2) (i) This ratio is true for power diodes. Or thyristors with $\alpha = 0$,

(ii) V_{ac} is considered as the phase voltage of each transformer limb. Even $V_{ph}/2$ is considered as V_{ac}, for simplicity.

(iii) To derive this equation refer to Vithayathil (1995).

(3) $I_{dc(h)}$ – d.c. output with ripples

	Voltage and current wave forms for α – 0	*Output voltage with firing angle α* $V_{dc} - \frac{\sqrt{2}\cdot n}{\pi} \times V_{ac}\sin\frac{\pi}{n}\cos\alpha$ ②	*Current on the a.c side (thyristor ① current)*			*Ratio of d.c.to a.c. voltage* $\frac{V_{dc}}{V_{ac}} = \frac{\sqrt{2}\cdot n}{\pi}\sin\frac{\pi}{n}\cos\alpha$② *for $\alpha = 0$*
			$I_{av} = \frac{I_{dc}}{n}$	$I_{rms} = \frac{I_{dc}}{\sqrt{n}}$	$I_{peak}=I_{dc}$	
(a)	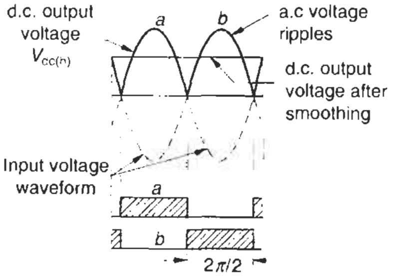 Current output waveform. Each phase conducting for 2π/2 = 180°	$\frac{2\sqrt{2}V_{ac}}{\pi}\cos\alpha$	$\frac{I_{dc}}{2}$	$\frac{I_{cc}}{\sqrt{2}}$	I_{cc}	0.9
(b)	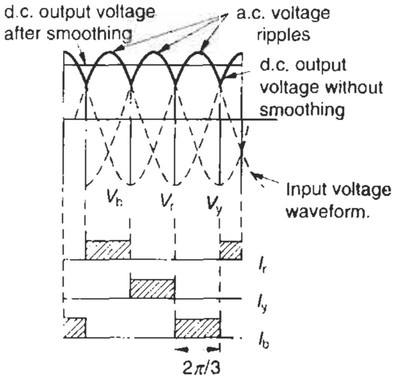 Current output waveform each phase conducting for 2π/3 = 120°	$\frac{3\sqrt{6}V_{ac}}{2\pi}\cos\alpha$	$\frac{I_{dc}}{3}$	$\frac{I_{dc}}{\sqrt{3}}$	I_{dc}	1.17
(c)	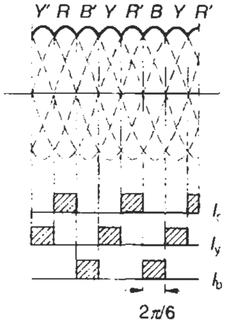 Current output waveform. Each phase conducting for 2π/6 = 60°	$\frac{3\sqrt{2}V_{ac}}{\pi}\cos\alpha$	$\frac{I_{dc}}{6}$	$\frac{I_{dc}}{\sqrt{6}}$	I_{dc}	1.35

(4) I_{dc} – d.c. output with minimal ripples

(5) The six secondary phases are obtained by shorting the centre points of each of the three-phase windings of a 3φ transformer secondary.

(6) For use of L and C refer to Figure 6.34.

Figure 6.24(a) A few configurations of controlled rectifier units (for uncontrolled rectifier units the thyristors (SCRs) are replaced with diodes)

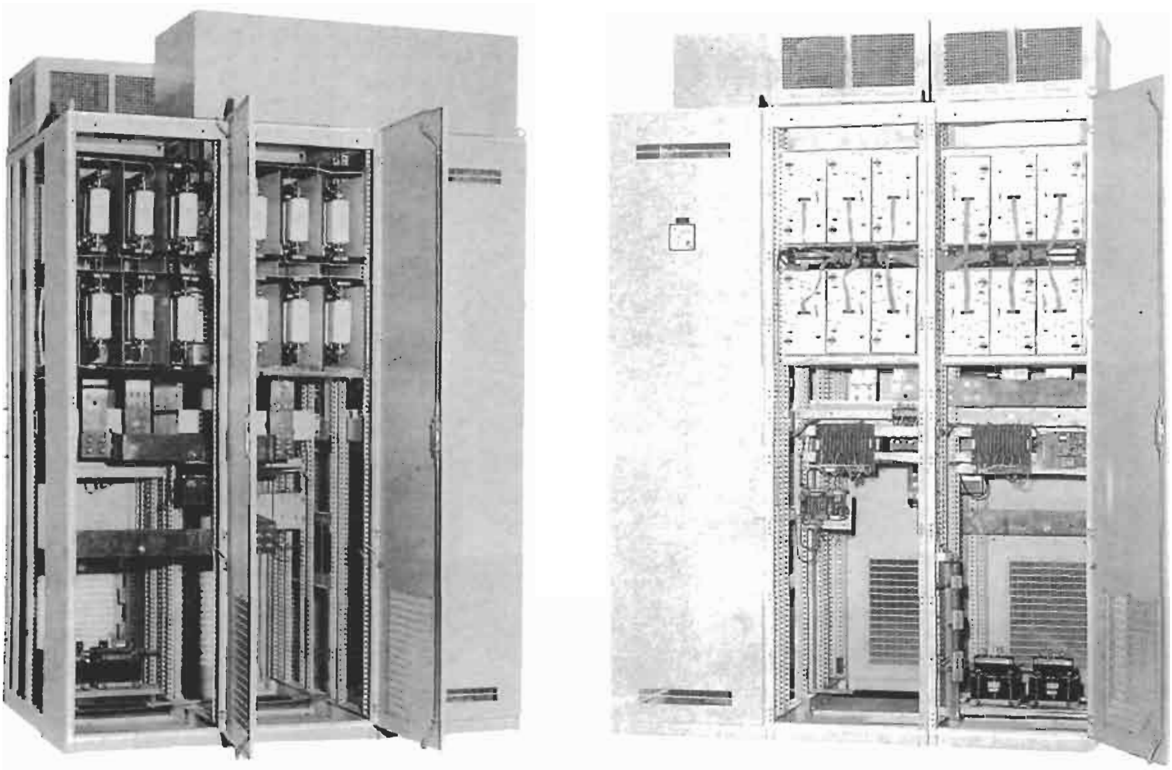

Rear view

Front view

Figure 6.24(b) Thyristor cubicles for high-power static converter units (Courtesy: Siemens)

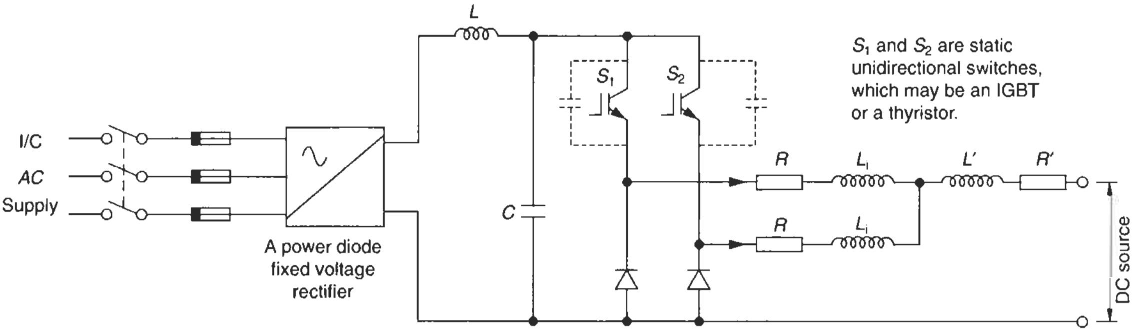

Figure 6.25 A typical bi-phase chopper scheme

control, besides being inexpensive in the presently developed ratings compared to GTOs. A fixed d.c. voltage is obtained through a power diode converter. The conversion from a fixed a.c. supply to a variable a.c. supply is thus cheap and easy to handle. A complete system composed of a converter and an inverter unit, as used to control an a.c. motor, is more commonly called an inverter. In Figure 6.26(a) we show a basic IGBT or thyristor (GTO) inverter unit. Single IGBTs developed so far can handle machines up to 650 kW. There are some deratings of an IGBT on account of a lower r.m.s. value of the inverted power, compared to the power input to the inverter, the configuration of the inverter (which defines the inverted waveform), the ambient temperature,

Table 6.4 Operation of a motor in different modes and the corresponding conducting quadrants of a controlled converter unit

+ V

Quadrant II

Operations – driving and braking (reverse motoring)
– reverse regeneration

Configuration – only a full wave
– an additional bridge for regeneration
Mode of operation – when motoring – converter
when regenerating – inverter

Quadrant I

Operations – driving and braking (forward motoring)
Configuration – half wave or full wave
Mode of operation – converter

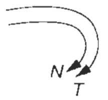

– T ——— + T

Quadrant III

Operations – driving and braking (reverse motoring)
Configuration – half wave or full wave
Mode of operation – converter

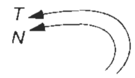

Quadrant IV

Operations – driving and braking (forward motoring)
– forward regeneration
Configuration – only a full wave
– an additional bridge for regeneration
Mode of operation – when motoring – converter
– when regeneration – inverter

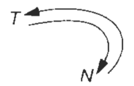

Reverse-running quadrants

Forward-running quadrants

–V

safety margins etc. Their overcurrent capacity is defined by the overload current and its duration. IEC 60146-1-1 has defined it as 150–300%, depending upon the application, for a duration of one minute. The manufacturer can derate a device for a required load cycle (overloading and its duration) according to the application. Unless specified, the present normal practice is to produce such devices for an overcurrent of 150% for one minute. A higher starting current than this or a start longer than one minute may call for a higher derating.

IGBTs can be used for still higher ratings (> 650 kW) by connecting them in series-parallel combination as noted earlier, but for higher ratings, thyristors (GTOs) are normally preferred for better reliability. More than one IGBT in series-parallel combination may sometimes act erratically and perform inconsistently. They are, however, being used for higher ratings also in the light of the technological advances in this field.

2 *Using thyristor devices (GTOs)* Thyristor (GTO) inverter circuits are used for higher ratings of machines than above and to control larger powers such as for those for reactive power control.

To obtain variable V and f

In IGBTs through pulse width modulation (PWM) The frequency in the inverter circuit is varied by frequently switching the IGBTs ON and OFF in each half cycle. While the voltage is controlled with the help of pulse width modulation, which is a technique for varying the duty cycle or the zeros of the inverter output voltage pulses. The duty cycle or CDF (cyclic duration factor) of the pulses is the ratio of the period of actual conduction in one half cycle to the total period of one half cycle.

For Figure 6.27(a)

$$\text{CDF} = \frac{t_1 + t_2 + t_3 + t_4 + t_5 + t_6}{T} \qquad (6.3)$$

where $t_1, t_2, \ldots t_6$ are the pulse widths in one half cycle. If V is the amplitude of the output voltage pulses, then the r.m.s. value of the output a.c. voltage

$$(V_{\text{r.m.s.}})^2 = (\text{CDF}) \cdot V^2$$

$$\text{or } V_{\text{r.m.s.}} = V \cdot \sqrt{\text{CDF}} \qquad (6.4)$$

By varying the CDF, i.e. the pulse widths of the a.c. output voltage waveform, the output, $V_{\text{r.m.s.}}$ can be varied.

The CDF can be controlled by controlling the period of conduction, in other words, the pulse widths (periodic time period, T remaining the same). Thus the a.c. output voltage in an IGBT inverter can be controlled with the help of modulation. The modulation in the inverter circuit is achieved by superposing a carrier voltage waveform

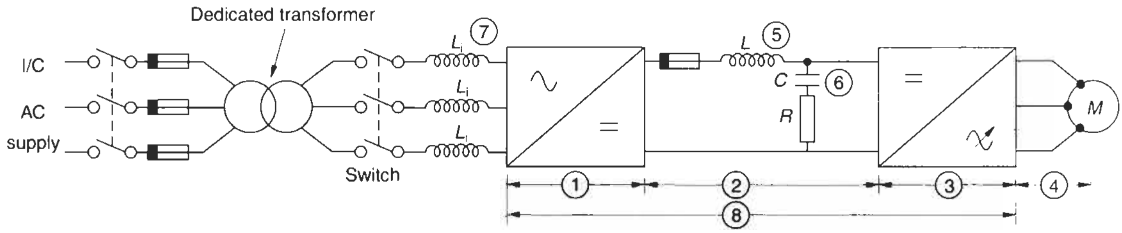

① *Rectifier or converter unit*
Converts a.c to d.c. and can be a power diode fixed voltage for a.c. drives (phase controlled thyristor converter for d.c. drives)

② D.C.link circuit connecting ① to ③

③ *Inverter unit*
Inverts d.c. to variable a.c. and can be an IGBT or a thyristor (GTO) circuit.

④ Variable *V* with an VSI (Figure 6.28(a)) or variable I with a CSI (Figure 6.29), and variable *f* a.c. power output

⑤ *Inductor L*
- (i) It is necessary to smooth a.c. ripples, whether it is a power diode or a thyristor rectifier. It also suppresses harmonics when, ① is a controlled rectifier, producing a.c. ripples and harmonics
- (ii) Can be a large size inductor, when ③ is a current source inverter (CSI) (Figure 6.29)
- (iii) Provides a short-circuit protection for a fault in d.c. link, by adding to its impedance

⑥ Charging capacitor, to hold the charge, by smoothing the output ripples and providing a near constant voltage source to the inverter circuit, when it is a voltage source inverter. When the converter is a thyristor converter, a resistance *R* is also provided with *C* to make it suitable to perform its duty under frequent thyristor switchings, by quickly discharging it through *R*. Now it becomes a snubber circuit, to also protect the inverter devices from d*v*/d*t*.

⑦ (a) Current limiting reactor on I/C side, to control d*i*/d*t* during switching of thyristor units when ① is a phase controlled rectifier. Not necessary when the unit is supplied through a dedicated transformer.
- (b) Also required to limit d*i*/d*t* to the solid-state circuits when the source of supply is large and is protected by current limiting device (Section 6.14, Figure 6.35).

⑧ Inverter unit (conventional name). Converts fixed a.c. to variable a.c.

Figure 6.26(a) Basic IGBT or thyristor (GTO) inverter unit

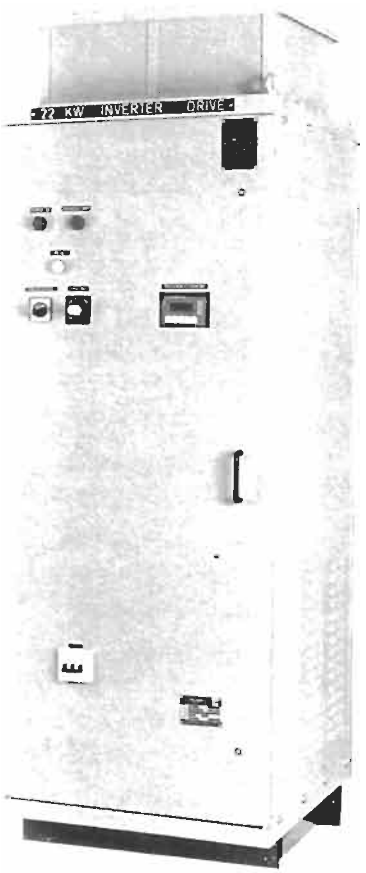

Figure 6.26(b) A small rating IGBT inverter unit (Courtesy: Kirloskar Electric)

of much higher frequency on the natural voltage waveform. Figure 6.27(b) is a simple block diagram for a PWM scheme, the natural voltage being the voltage obtained by the switching of the IGBTs. The carrier wave can be of any shape, the frequency of which is altered, to obtain the required degree of modulation, and hence the voltage, while the amplitude is kept fixed. The amplitude is a matter of scheme design. (For more detail refer to the textbooks in the Further reading.) Generally, a triangular wave is used as shown in Figure 6.27(b) to obtain a more uniform sinusoidal voltage waveform. By Fourier analysis we can establish the amplitude of voltage and quality of waveform (distortions), and by controlling the pulse widths through the frequency of the carrier wave, we can decide the best modulation to obtain the required amplitude and a near-sinusoidal output voltage waveform. (For details of Fourier analysis, refer to a textbook.) This is the most commonly used technique in the inverter circuit to obtain the required *V/f* pattern. It is also economical and can be used to control multi-motor drives through a single unit. Since the variation is based on voltage, the inverter may be called a voltage source inverter (VSI). To obtain an accurate *V/f* control, it is essential that the voltage is maintained uniform (without ripples) as much as possible. This can be achieved by providing a capacitor across the d.c. link as shown in Figure 6.26(a). The purpose of the capacitor is to hold the charge and smooth the output a.c. ripples of each diode and hence provide a near-uniform d.c. voltage. The charge retained by a capacitor can be expressed by

$$Q = C\,\frac{dv}{dt} \qquad (6.5)$$

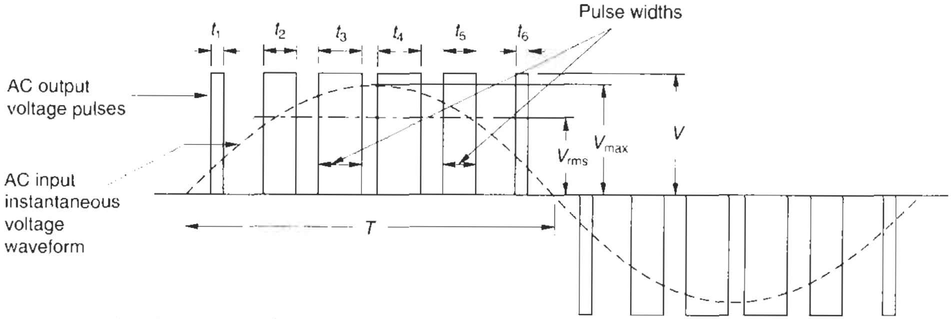

$$\text{C.D.F.} = \frac{t_1 + t_2 + t_3 + t_4 + t_5 + t_6}{T}$$

and $V_{rms} = V\sqrt{\text{C.D.F}}$

Figure 6.27(a) Varying the output a.c. voltage with PWM technique

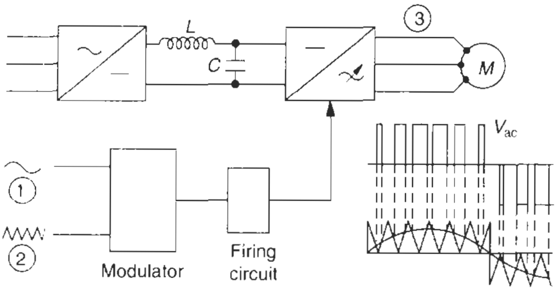

① Reference voltage
Inverter natural voltage waveform before modulation, improved to a near sinusoidal waveform, with the use of L and C.
② Carrier voltage
Triangular voltage waveform of fixed amplitude
③ Variable frequency and modulated voltage output (V/f) as desired.

Figure 6.27(b) Block diagram for a PWM scheme

where Q = charge stored by the capacitor unit
C = capacitance of the capacitor
$\frac{dv}{dt}$ = rate of voltage change or a.c. ripples in the d.c. link

The higher the value of C, the lower will be the voltage overshoots in the rectified voltage and the inverter circuit would be fed by an almost constant voltage source. The capacitor in the circuit also provides an indirect protection from the voltage surges.

The above method is used to vary the frequency and the voltage of the inverter output (motor side) according to the process needs, irrespective of the electronics scheme adopted to obtain the required speed control.

Note The variation of frequency is generally up to its fundamental value, i.e. 0–50 or 0–60 Hz, in view of the fact that the motor is generally required to operate below the base speed. At higher frequencies the motor will overspeed, for which its own suitability as well as the suitability of the mechanical system must be pre-checked. When, however, such a situation be desirable, the frequency may be varied to the desired level by switching, keeping the output voltage to the rated value. Since the torque of the motor will now reduce α 1/N, this must be checked with the load requirement.

In GTOs

The frequency in the inverter circuit is varied by switching the GTO pairs ON and OFF repeatedly through their gate control in each one half cycle. The rate of frequency variation will depend upon the frequency of switching of the GTO pairs. The voltage variation is obtained by varying the gate firing angle, α.

By using converter–inverter combinations in different configurations and by applying a proper gate control, a variety of fixed and variable output parameters of a fixed parameter a.c. input power can be obtained. When the motor is operating at very low speeds, say, below 5% of N_r, the motor voltage demand is also low. If the inverter circuit is load commutated (motor side), its phase current will have to commutate with a very low voltage at the load side. It is difficult to guarantee reliable commutation at such low voltages. Pulse width commutation is therefore also employed in thyristor drives when the motor has to operate at very low speeds. Where the motors are very large, cyclo converters can also be employed. Below we discuss a few inverter configurations. Generally PWM (for IGBTs) and gate control schemes (for thyristors) may be applied to these inverter circuits to obtain the required variable a.c. supply parameters at the output line to suit a particular requirement.

6.9.3 Voltage source inverter (VSI) using IGBTs (to vary *V* and *f*)

This is the most commonly used inverter for the control of a.c. motors and is shown in Figure 6.28(a). The fixed d.c. voltage from the uncontrolled rectifier converter acts as a voltage source to the inverter. The voltage in the inverter unit is varied to the required level by using a pulse width modulation, as noted earlier. Through the switching circuit of the inverter the frequency of the

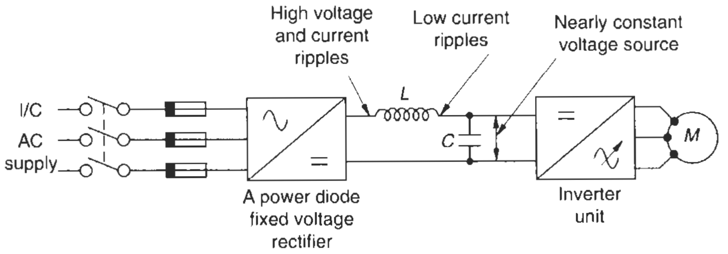

- Use of C is to hold the charge and provide a near constant voltage source to the inverter
- Use of L is to improve the quality of d.c. power to the inverter, in turn to improve the quality of power to the machine.

Figure 6.28(a) A voltage source inverter (VSI)

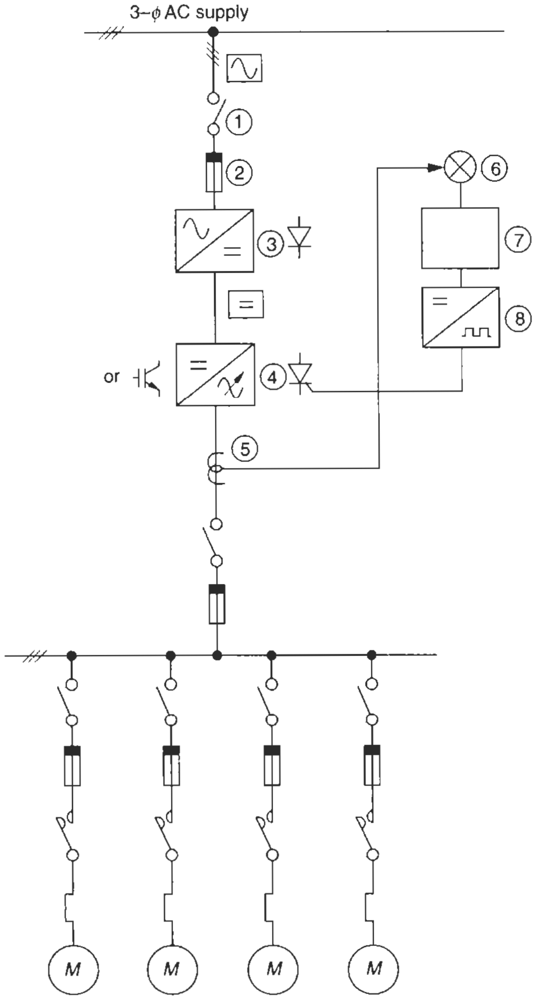

① Isolator
② Fuse
③ Diode bridge rectifier (converter)
④ Inverter unit IGBT or thyristor depending upon the size of machine
⑤ CT
⑥ Current comparator
⑦ Current amplifier and controller
⑧ Gate control in case of thyristor inverters only.

Figure 6.28(b) Single line block diagram showing cascade connections of motors on a variable voltage common bus, using a VSI

output supply is varied by repeated switching of the IGBTs. The frequency of switching of the IGBTs determines the frequency of the output a.c. voltage. The inverter unit (converter–inverter unit combined) can be considered as comprising:

1 **Rectifier unit (converter)** This is a fixed voltage uncontrolled diode bridge rectifier.
2 **Smoothing circuit** To obtain a near-constant voltage source for the inverter circuit a smoothing capacitance across the d.c. link is used to smooth the a.c. ripples present in the d.c. link after conversion. The capacitor retains the charge and provides a near-constant d.c. voltage output.
3 **Inverter unit** This inverts the fixed d.c. voltage to a variable V and f a.c. voltage. Such a system can control multi-motor drives, operating on the same bus and requiring similar speed controls. The inverter parameters can be closely controlled with the help of feedback controls and sensing devices as illustrated in Figure 6.28(b).

6.9.4 Current source inverter (CSI)

(to vary I_1 and f)

This is similar to a voltage source inverter, except that now it is the rectified current that is varied rather than the voltage. On the input side of the inverter it acts as a current source. Since this current is already pre-set for the required a.c. output current I_1, the motor current is always within its permissible loading limits. The current control, therefore, provides self-control to the motor. As before, as shown in Figure 6.29, a fixed d.c. voltage is provided through an uncontrolled diode bridge rectifier. This voltage is converted to a constant current source with the help of a large series inductor in the d.c. link. The purpose of this inductor is to provide a near-constant current source by reducing the di/dt ripples. The inductor plays the role of a current source and acts like a current chopper. Since, the voltage across the inductor can be expressed by

$$V \simeq L\frac{\mathrm{d}i}{\mathrm{d}t} \text{ (ignoring } R \text{ of the circuit)} \qquad (6.6)$$

the higher the value of L, the lower will be the current overshoots, i.e. the rate of the current change di/dt, through the inductor. A high value of the inductor would make it possible to provide a near-constant current source for the inverter circuit. With more modifications, the above

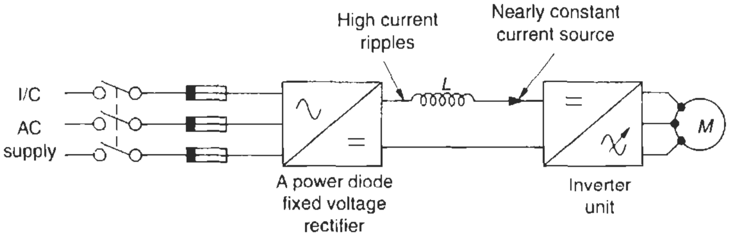

Large *L* is essential to smoothen ripples and provide a near constant current source to the inverter.

Figure 6.29 A current source inverter (CSI)

can be made to operate according to a pre-defined current waveform for very strict speed control of a motor. Now they may be called current regulated inverters. With feedback controls, precise control of a motor can be achieved. A current source inverter provides a simpler and better control and may be preferred for large drives, particularly where regenerative controls are involved.

Now the frequency of the a.c. output current is also varied through the switching of the IGBTs in the inverter unit, as noted earlier, and the current is varied by varying the output a.c. voltage, using the same PWM technique as for a VSI. Through this scheme only single-motor control is possible, as different motors will have different currents, as they may be of different ratings. However, it is more suitable for larger drives, as it is easy to handle currents rather than voltages.

6.9.5 Cyclo converters (frequency converters)

In addition to the above inverter systems there is one more system, called a cyclo converter system. These drives are employed for very large motors, when IGBTs in such ratings are a limitation. It converts the fixed a.c. supply frequency to a variable frequency, generally lower than rated, directly and without rectifying it to a d.c. source. They are basically frequency converters. This system is more complex and expensive and has only limited application, such as for very large motors that are to operate at very low speeds (e.g. in cement factories and steel mills). For details refer to the literature available on the subject. A few books are mentioned in the Further reading.

6.9.6 The regenerative schemes

A motor can fall in a generator mode when the machine is energized and is run beyond its synchronous speed, such as when driving a load, travelling down hill or when its speed is reduced to perform a specific duty. The same conditions will appear when a running machine is reversed, whether it is an a.c. or a d.c. machine.

In any of the above generating modes if the surplus energy is not fed back to the supply source it may have to be dissipated in some other form. Otherwise it may raise the d.c. link voltage beyond its acceptable level, and lead to an unwanted trip of the machine or overheating. It may also endanger the static devices used in the inverter circuit or the components in the d.c. link. One simple way to do this is to consume these in a resistor as shown in Figure 6.30. This is known as dynamic braking, and the regenerative energy is wasted. The resistor is introduced in the circuit through a bus voltage sensor. As soon as the bus voltage rises beyond a pre-set limit, the resistor is switched into the circuit. In smaller motors

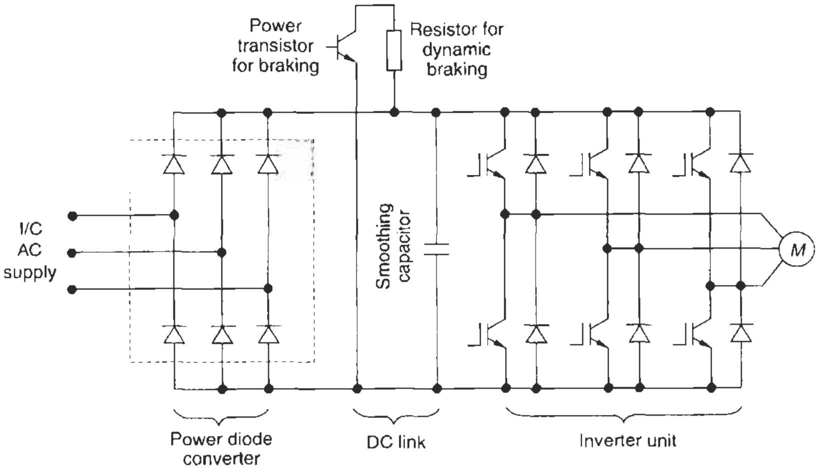

Figure 6.30 An IGBT inverter unit with dynamic braking

it is common practice to dissipate the heat of regeneration in this way but in larger machines it can be a substantial drain on the useful energy, particularly when the machine is called upon to perform frequent variations of speed, reversals or brakings. It is, therefore, advisable to conserve this energy by feeding it to the other drives or by transferring it back to the source of supply, which can be done in the following ways.

When controlling an a.c. machine, the converter is usually a full-wave, power diode fixed-type rectifier and the *V/f* is controlled through the IGBT inverter. For regenerative mode, the d.c. bus is connected in anti-parallel with a full-wave voltage-controlled inverter as shown in Figure 6.31.

During a regenerative braking, the d.c. voltage starts to rise, which the inverter regulates to the required level (*V* and *f*) and feeds back the regenerative energy to the source of supply. This is known as synchronous inversion. When the inverter is of a lower voltage rating than the supply source then a transformer between this and the supply source as shown will also be necessary to regulate the feedback voltage to the required level. The delta side of the transformer may be connected to the supply side to eliminate the third harmonic quantities to the source. Overvoltage, overload and short-circuit protections may be provided on the d.c. bus, on which may occur a fault or whose voltage may rise beyond the pre-set limits. A similar inverter circuit is used in a d.c. machine also when the regenerative energy is to be fed back to the source of supply (Figure 6.32).

It is also possible to use an IGBT converter instead of a power diode or a thyristor converter. A single IGBT converter unit is capable of performing both the jobs, converting the fixed a.c. supply to a fixed or variable d.c. voltage to control an a.c. machine and during a regenerative mode, feeding the regenerative energy back to the source of supply. A separate transformer will not be necessary now, as the same IGBT circuit will act as a regenerative inverter. The switching of an IGBT is now an easy feature. The harmonics are also too low, and the p.f. can be maintained up to unity. Now the IGBT converter can be called a sinusoidal converter, as it will provide a near-sinusoidal waveform of voltage and currents during a feedback. The d.c. bus can also be made a common bus to feed a number of drives through their individual IGBT inverters to cut on cost. This is possible when a number of such drives are operating in the vicinity or on the same process line. Figure 6.33 illustrates a simple scheme with a common d.c. bus.

6.10 Smoothing ripples in the d.c. link

A power diode rectifier unit feeding a fixed d.c. power to an inverter unit to control an a.c. motor, or a thyristor rectifier unit, directly controlling a d.c. motor, both contain a.c. ripples in their d.c. outputs, as illustrated in Figure 6.24(a). It is essential to smooth these ripples to improve the quality of d.c. power. To achieve this, a series inductor *L* is provided in the d.c. link as shown in Figures 6.24(a) and 6.28(a). In the process it also reduces the harmonics on the input side. To cut on cost, it is possible to limit the

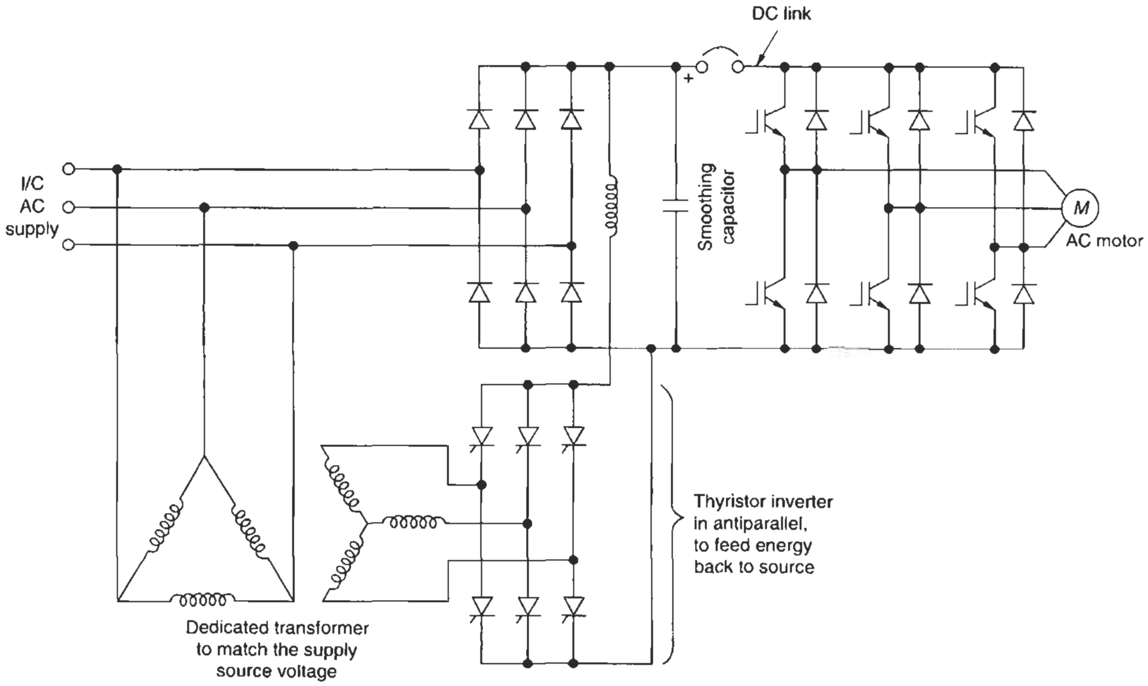

Thyristor inverter in antiparallel, to feed energy back to source

Dedicated transformer to match the supply source voltage

Figure 6.31 Regenerative energy feedback arrangement for an inverter unit

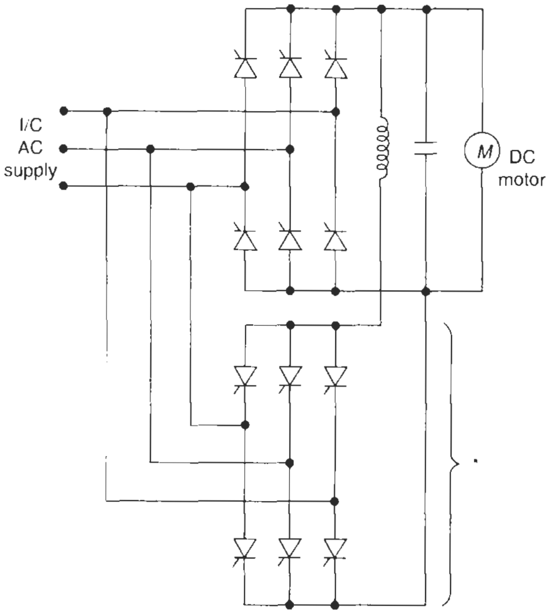

* Fully controlled thyristor inverter in anti-parallel to feedback energy

Figure 6.32 Regenerative energy feedback arrangement for a converter unit

use of such inductors to larger drives only, say, 10 h.p. and above. In smaller drives the ripples may not significantly influence the performance of the machine.

The inductance in the d.c. link may cause a reverse voltage spike across the power diodes or thyristors as a result of the decay of the reverse current (release of its stored energy). A power device may be protected against such voltage spikes through an R–C snubber circuit, as shown in Figure 6.37. (This circuit is discussed later.)

6.11 Providing a constant d.c. voltage source

After smoothing the d.c. voltage may contain moderate ripples not desirable when a constant voltage d.c. source is needed. To achieve this, a charging capacitor C is also provided across the d.c. link for all sizes of drives as shown in Figures 6.24(a) and 6.28(a).

6.12 Providing a constant current source

Instead of a charging capacitor C, a large size series inductor L is introduced in the d.c. link (Figure 6.29). Since $V = L\,\mathrm{d}i/\mathrm{d}t$, the larger the value of L, the lower will be the current overshoots ($\mathrm{d}i/\mathrm{d}t$) and a near-constant d.c. link current source is obtained for the inverter unit.

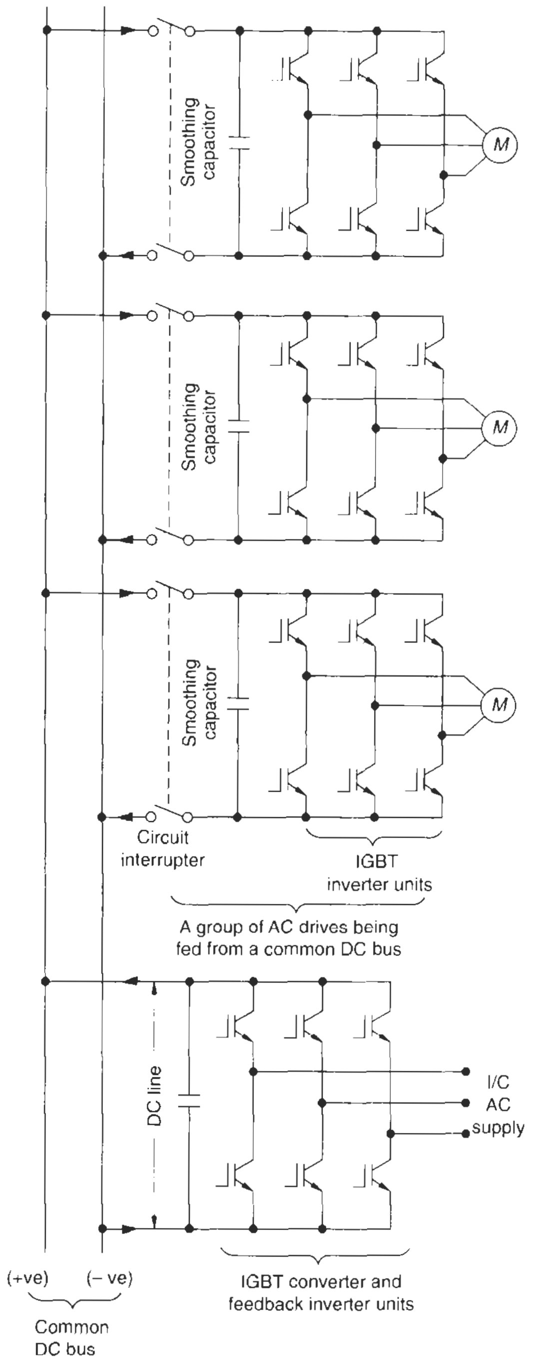

Figure 6.33 An IGBT converter-cum-inverter unit to feed back regenerative energy

6.13 Generation of harmonics and switching surges in a static device switching circuit

A switched static device (particularly a thyristor) produces voltage and current transients similar to inductive or capacitive switching (Section 17.7). They also produce harmonics. However, a power diode converter unit having no switching sequence is devoid of such a phenomenon. A thyristor (SCR) switched phase-controlled converter unit produces large quantities of harmonics on the supply (a.c.) side and also in the d.c. link and also voltage and current surges on the incoming supply side. An IGBT, on the other hand, as used in an inverter circuit, causes only moderate harmonics during switching, but does produce voltage surges on the load side. All these factors are not desirable and must be suppressed or tamed at the point of occurrence to save the connected equipment and the devices. Below we discuss these phenomena, particularly for thyristor circuits and their possible remedies.

6.13.1 Suppressing the harmonics (in phase-controlled rectifier units)

Phase-controlled rectifier circuits generate excessive odd harmonics such as 5th, 7th, 11th, 13th etc., depending upon the pulse number, *n*, of the circuit configuration adopted, as discussed in Section 23.6(b). These harmonics add to the inductive loading of the circuit since $X_L \propto f_h$ and diminish the p.f. of the system, although they hardly influence an induction motor, (Section 23.5.2(B)). The 3rd harmonics are totally absent because mostly six pulse thyristor converters are employed, which eliminate all the 3rd harmonics from the voltage and the current output waveforms. Thyristors in other configurations such as 12, 18 and 24 pulses are also possible, which can eliminate most of the harmonics from the output waveforms. The higher the pulse number, the closer it approaches the mean and effective (r.m.s.) values of the rectified voltage and the voltage approaches a near peak value (Section 23.6(b)). (See also Figure 23.10.) However, higher pulse thyristor converters become very expensive and are employed only for very large power applications.

Current harmonics in a d.c. link

To limit the current harmonics generated in the d.c. link, series smoothing reactors are inserted on the d.c. side as shown in Figure 6.24(a). They are large iron core unsaturable reactors (L). (For details on reactors see Chapter 27.) They provide high impedance paths to the different harmonic quantities and suppress the more prominent of these at the source, and provide a near smooth d.c. output voltage waveform. For large power applications, requiring a near-constant d.c. output, more accurate L–C circuits (even more than one) may be provided in the d.c. link to suppress the more prominent of the harmonic quantities.

A large inductor in the d.c. link may also play the following roles:

1 In the event of a fault in the d.c. link it will add to the circuit impedance and limit the rate of rise of fault current, since under a transient condition

$$V = L\frac{di}{dt}$$

A high value of L will limit the rate of rise of fault current for the same voltage and save the circuit components.

2 A low d*i*/d*t* will also help to smooth the d.c. link current waveform.

3 It has a disadvantage in that it may have a sluggish response to the control circuit demands due to its high time constant ($\tau = L/R$)

Current harmonics on the incoming a.c. supply side

The presence of harmonic quantities in the electronic circuit distorts the sinusoidal incoming supply system to a non-sinusoidal one the magnitude of which will depend upon the configuration of the converter circuit and the variation in the connected load. The line side converter unit draws a somewhat squarish waveform current from the mains, as analysed in Figure 23.7. It may adversely influence the power equipment operating on the incoming supply side of the system, which may be a motor, a transformer or a generator, due to higher no-load losses as a consequence of high harmonic frequencies (equations (1.12) and (1.13)). It may also cause overloading of the capacitor banks connected on the incoming side and subject all this equipment to higher voltage stresses. The higher inductive loading also diminishes the p.f. of the system. To contain the influence of these features, the use of filter circuits to suppress the harmonics and power capacitors, to improve the system p.f. on the incoming side are mandatory to maintain a healthy supply system, particularly when it is feeding a few phase-controlled converter units, handling large machines and generating high harmonics. Figure 6.34 shows the use of an inductor in the incoming circuit to suppress the harmonics and limit current overshoots. Power capacitors are not shown, which can be provided for the whole system at a centralized location. The design of filter circuits and the size of power capacitors, to adopt a more appropriate corrective method, will require a meticulous network analysis to determine the actual numbers and magnitudes of such harmonics present in the system. The subject is dealt with in more detail in Section 23.5.2. In Figure 6.24(a) we have shown a few more common types of thyristor configurations, their voltage and current wave-forms and the application of reactors to suppress the harmonics and smooth a.c. ripples.

6.14 Protection of semiconductor devices and motors

6.14.1 Overvoltages and voltage surges caused by disturbances in an LT system

Semiconductor devices are irreparable after a failure and hence require extra precautions for their protection. Although a voltage transient generally is a phenomenon of HT systems, as discussed in Chapter 17, moderate long-duration switching surges (voltage spikes), other than lightning and the transference of surges, are noted

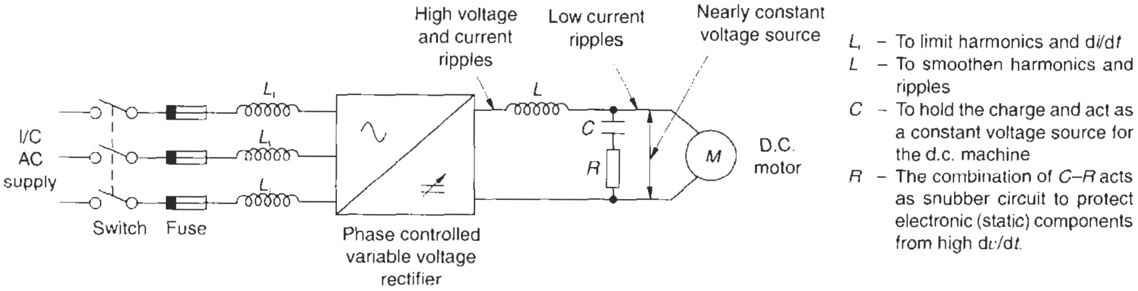

Figure 6.34 Application of inductor and capacitor with a controlled bridge rectifier (for control of d.c. machines)

on an LT system also (see IEEE-C62.41). We summarize the likely causes for such surges on an LT system and their remedial measures below.

External causes

- Lightning
- Transference of surges from the HV to the LV side of a transformer (Section18.5.2).

Protection from such surges is achieved by using a distribution class surge arrester at the receiving end of the supply. Generally no protection is therefore necessary for the semiconductor devices. For more details see Chapter 18.

Internal causes

LT systems that are prone to frequent faults and outages or constitute a number of inductive or capacitive switched loads and welding transformers may generate temporary overvoltages (TOVs) and voltage surges. Such systems must be studied carefully, and when felt necessary, a metal oxide varistor (MOV) or a large inductor be installed at the incoming side of the semiconductor circuits, as noted below:

- Switching of motors: this is generally not harmful as they can generate only overvoltages, not exceeding $2 \cdot V_r$.
- Switching of capacitors: these also generate only overvoltages, generally not exceeding $2 \cdot V_r$. However, it may be of concern when there is a parallel switching of large capacitor banks, causing a high switching frequency (Section 23.5) and correspondingly a shorter wave and a shorter rise time that may take the shape of a surge.

Both these switchings on an LT system do not cause a re-strike.

- Switching of welding transformers: these may cause dangerous voltage surges.
- Fault condition: particularly when the LT distribution is fed through a large transformer and the outgoing feeders are protected by a current limiting device, HRC fuses or breakers. In the event of a fault, on a large outgoing feeder, as illustrated in Figure 6.35, the protective device will trip and trap an inductive charge within the transformer and the connecting cables, with an energy of $1/2\,L \cdot (I_{sc}^2 - i_{sc}^2)$. L is the inductance of the transformer and the interconnecting cables up to the static circuits and i_{sc} the cut-off current of the prospective fault current I_{sc}, at the instant of fault, as shown in Figure 6.35. The clearing of fault by a current limiting device is a transient condition and is synonymous with a switching condition and may generate switching surges. This energy is discharged into the circuits located downstream of the feeding source. The trapped energy is a source of danger to all healthy circuits that are located near the source, and the worst affected are the feeders, that may be switched at such instants.

All the above surges and even the transference of a lightning surge from an overhead line through inter-

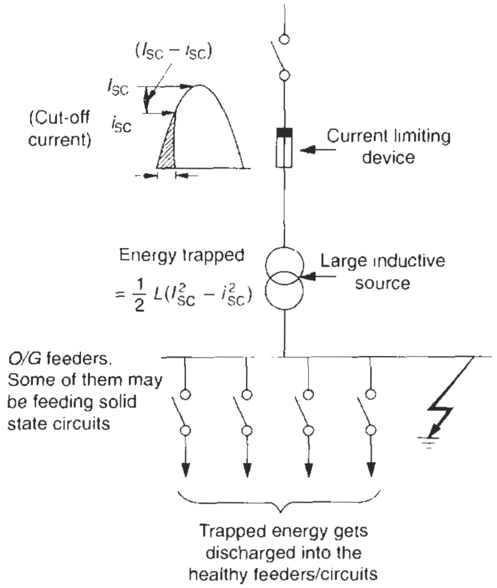

Figure 6.35 Trapped energy distribution of a large feeding source during a fault clearing by a current-limiting device

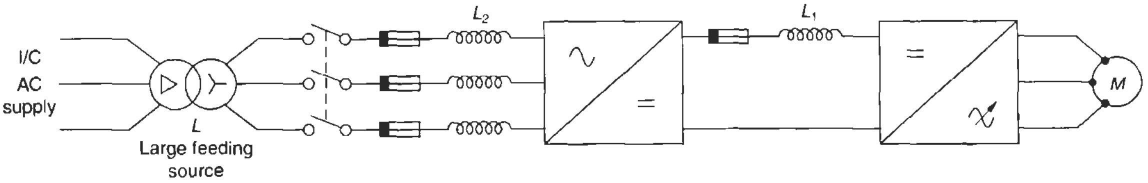

L – Inductance of the supply source
L_1 – Inductor to smooth ripples
L_2 – Inductor to absorb the trapped energy up to $\frac{1}{2} L \cdot (I_{sc}^2 - i_{sc}^2)$[partly absorbed by the feeder's own impedance and other feeders connected on the same line]

Figure 6.36 Use of inductor on the supply side of a static drive to absorb the trapped energy

connecting cables are unidirectional and reflect in nearly full at a junction and cause a doubling effect, hence they are more dangerous. The semiconductor devices can be saved from such harmful effects by absorbing the trapped energy. The effect of a trapped charge is somewhat a replica of a discharge of a surge arrester. In a surge arrester, the energy above the protective level of the arrester is discharged through the ground (Section 18.5). In this case, it is discharged into the healthy circuits ahead. Normal practice to tackle such a situation is to provide an inductor, sufficient in size, to absorb this energy at the receiving end of the static circuit as illustrated in Figure 6.36. This protection is applicable to all types of electronic circuits. It is equally applicable even in a power diode converter unit, involving no switching operations.

Transients occurring within the converter unit

This is applicable to thyristor (SCR) circuits to protect all the semiconductor devices used in the switching circuit, such as diodes (also power diodes) or IGBTs, in addition to SCRs. The same protection can be applied to all the semiconductor circuits likely to experience high dv/dt.

The role of SCRs is to vary the supply parameters, which require frequent changes in V, i.e. dv/dt and in I, i.e. di/dt in an energized condition. Because of momentary phase-to-phase short-circuit, dv/dt occurs during switching OFF and di/dt during switching ON sequences. Both are transient conditions and may damage the semiconductor devices used in the circuit. To protect the devices, the transient conditions can be dealt with as follows:

- *Voltage transients* (dv/dt) When a thyristor switches from a closed to an open condition, i.e. from a conducting to a non-conducting mode, a transient recovery voltage (TRV) appears. This is a transient condition and the rate of change of voltage can be expressed by

$$Q = C' \cdot \frac{dv}{dt}$$

where, Q = charge stored within the devices before occurrence of the switching
C' = leakage capacitance of the thyristor between its junctions
dv/dt = rate of rise of recovery voltage (r.r.r.v.)

During a switching OFF sequence this charge must be dissipated quickly otherwise it may cause dangerous overvoltages, which may damage the static devices used in the circuit or turn them ON when this is not wanted. A thyristor is switched ON only when there is a current pulse applied to its gate. It is possible that the gate may turn ON without this pulse as a result of excessive forward dv/dt due to leakage capacitance between the thyristor junctions. The leakage capacitance may cause a charging current through the gate. When it exceeds its threshold value, it can turn the gate ON. dv/dt is therefore a very important limiting parameter to avoid an erratic turn ON of the thyristors, which may corrupt the output parameters and lead to malfunctioning of the whole system or cause a short-circuit and damage the static devices used in the circuit. It is therefore important to suppress such transients within safe limits. It is possible to contain them, provided that the stored energy can be dissipated quickly into another source. This is achieved by providing a snubber circuit across each static device as noted below, similar to the use of a quenching medium in an HT interrupter (Section 19.2).

- *Snubber circuit* More conventional protection from high dv/dt is to provide an R–C circuit across each device, as shown in Figure 6.37. The circuit provides a low impedance path to all the harmonic quantities and draws large charging currents and absorbs the energy released, Q, and in turn damps dv/dt within safe limits across each device. Now $Q = C$ (dv/dt)

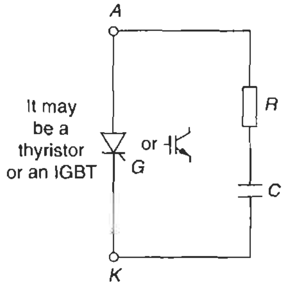

Figure 6.37 Use of a snubber circuit across a power switching device

where C is the capacitance used across the device. During a turn OFF operation the stored energy, Q, of the circuit will discharge into this capacitor and charge the same to its optimum level (charging time constant $\tau = R\,C$) and slow down the rate of rise of TRV (r.r.r.v.), i.e. dv/dt across the static circuit and limit the voltage spikes, similar to motor protection discussed in Section 17.10.1. The higher the value of C, the lower will be the voltage (commutation) overshoots. During a switch ON the capacitor discharges its total energy into the R and prepares for the next switching operation. The power dissipation into R is proportional to the switching frequency. R also limits the peak value of the discharge current through the static device and damps the oscillations. Here the use of C is to hold the charge and then release the same into R and not to smooth the ripples.

- *Current transients* A similar situation will arise when a switching ON operation of the rectifier unit occurs when it is a thyristor rectifier. Under load conditions, the stored magnetic energy in the incoming supply system, which can be the feeding transformer and the line reactances similar to a fault condition discussed earlier, may cause a current transient which can be expressed by

  $$V = -L \cdot \frac{di}{dt}$$

  where

  V = applied voltage

  L = inductance of the total circuit up to the d.c. link and

  di/dt = rate of change of current, as the switching ON is a transient condition and causes overload and short-circuits. This is maximum at the commencement of switching ON and becomes zero on its completion. It is analogous to contact making in an interrupter (Section 19.1.1). The same situation will arise even during a fault condition. Excessive rate of change of current may cause an overload and even a short-circuit.

The rate of current change must therefore be controlled to a safe limit by providing a dampening circuit on the supply side. This can be a series inductance as shown in Figures 6.26(a), 6.34 and 6.36. This inductance may not be necessary when the unit is being supplied through a dedicated transformer. The inductor will absorb the magnetic charge and damp the rate of rise of current.

$$\text{Now } V = L_i \frac{di}{dt}$$

L_i is the additional series reactance. The higher the value of L_i, the lower will be the rate of rise of current.

The inductor on the input side also suppresses the harmonics in the incoming supply, as high L_i will provide a high impedance path to higher harmonics. For suppression of harmonics, where the supply system is already substantially distorted, additional L–C filter circuits may be provided on the incoming side for more prominent harmonics. (For details of filter circuits see Section 23.9.) The main purpose of inductance here is protection, rather than suppression of harmonics.

Due to a high time constant of the dampening circuit $\tau = L_i/R$ (R being the resistance of the circuit) it will also delay occurrence of the fault by which time the circuit's protective scheme may initiate operation.

It would also add to the line impedance to contain the severity of the fault conditions.

From the above we notice that the current surges can be caused either by the tripping of a current limiting device, when the distribution is through a large transformer on which is connected the static circuits, or by switching of the SCRs within the converter circuit itself. The protective scheme for both remains the same and is located at the incoming of the semiconductor circuits. There can be two situations. When the static circuits are being fed through a dedicated transformer in all probability no additional inductor will be necessary. Not even when there is a large transformer feeding a large distribution network on which is connected the semiconductor circuits. It is, however, better to carry out the trapped energy calculations to compare these with the inductance already available in the switching circuits of the semiconductor devices.

When there is no dedicated transformer and these circuits are connected on the system bus directly a large inductor will be essential at the incoming of the static circuits, sufficient to absorb the trapped charge within the transformer and the interconnecting cables up to the converter unit. The size of the inductor can be calculated depending on the size (kVA) of the distribution transformer, its fault level and the characteristics of its current limiting protective device. An inductor sufficient to absorb $i_{st}^2 \cdot L$ of the transformer and the cables may be provided at the incoming of the static circuits.

Voltage surges in the inverter circuit

Generally, voltage surges on an LT system are of little relevance as analysed in Section 17.7.6. Instances can, however, be cited of motor insulation failures, even on an LT system, when the machine was being controlled through a static drive, which might be an IGBT switched or a thyristor (GTO) switched inverter, the reason being a steep rising switching wave generated through the inverter circuit. The output of the inverter unit being in the shape of a non-sinusoidal voltage waveform also adds to the switching transients. To visualize the effects of fast switching in a static circuit, it is relevant to corroborate these with the switching of a conventional HT interrupting device, discussed in Section 17.7. The static devices also cause switching surges and their severity is also defined by their amplitude and the rise time (Figure 17.2). These devices are seen to produce voltage surges with an amplitude up to two to three times the voltage of the d.c. link and a rise time as low as 0.05–0.4 μs (typically) in IGBTs and 2 to 4 μs (typically) in GTOs (see Lawrence et al. (1996) and the Further reading at the end of the chapter). Their severity increases when they cause a reflection (doubling phenomenon) at the motor terminals. The amplitude of the reflected wave will depend upon the length of the interconnecting cables, between the inverter and the machine and the switching frequency of the inverter unit. The amplitude of the wave after reflection may exceed the BIL (basic insulation level, Table 11.4 for LT and Table 11.6 for HT motors) of the machine, particularly when the machine is old and its insulation has deteriorated (Section 9.2), or when it is required to perform frequent switching operations. In IGBTs particularly, the rise time is too short and the surges behave like an FOW (front of wave, Section 17.3.3), which are all the more dangerous for the end turns of the connected machine. The length of cable from the inverter to the machine plays a vital role. The longer the cable, the higher will be the amplitude of the voltage surge at the motor terminals. This aspect is discussed in greater detail in Section 18.6.2. The leading manufacturers of static drives specify, as a standard practice, the amplitude and the rise time of the switching surges of their devices at a particular voltage and switching frequency of their inverter unit (normally 2–4 kHz) and the maximum safe cable lengths. While most installations may not need separate surge protection, it is advisable to take precautions against any contingency during actual operation to protect the machine against these surges under the most onerous operating conditions. The remedies are the same as those discussed in Section 17.10 on the protection of electric motors. For example, surge capacitors for most of the motors will prove sufficient and economical to protect the machine by taming the steepness of fast rising surges at the motor terminals. (See curves 1 and 2 of Figure 17.21.) The surge capacitor may be provided with a discharge resistance as standard practice, as also noted in the snubber circuits. The resistance would help the capacitor to discharge quickly and prepare for the next operation.

In addition, it would also help to dampen the amplitude of the arriving surge. The use of inductor on the load side to provide an impedance to the arriving surges with a view to suppressing them is not good practice, for it may diminish the p.f. of the circuit and also cause a voltage drop across it, which may affect the machine's performance.

Note A manufacturer of static drives would normally give an option to the user to operate their inverter circuit (IGBTs normally) at high PWM carrier frequencies (typical 2–8 kHz) to smooth the output (load side) voltage. But at high frequencies, the propagation of surges becomes faster and may cause quick reflections, which would require either a shorter cable or the use of a surge suppressor. High-frequency operations also raise the noise level in the ground path and can cause sensitive devices like PLCs, sensors and analogue circuits to behave erratically, as they are all connected through the ground circuit. It is therefore desirable to operate the IGBTs or GTOs at lower frequencies, preferably 2–4 kHz, as this will cause low ripples as well as a low noise level. A moderate carrier frequency will also help in taming the arriving surges at motor terminals with only moderate steepness.

Conclusion

1. Induction motors, both, squirrel cage and slip-ring, can be easily controlled to achieve the required characteristics by applying solid-state technology.
2. With the availability of phasor control technology, by which one can separate out the active and magnetizing components of the motor's stator current and vary them individually, it is now possible to achieve higher dynamic performance and accuracy of speed control in an a.c. machine similar to and even better than a separately excited d.c. machine.
3. With this technology it is now possible to achieve extremely accurate speed control of the order of ± 0.01% to ± 0.001%. To achieve such high accuracy in speed control, closed-loop feedback control systems and microprocessor-based control logistics can be introduced into the inverter control scheme to sense, monitor and control the variable parameters of the motor to very precise limits.
4. A very wide range of speed controls is available through this technology as it is possible to vary frequency on both sides (±) of the rated frequency.
5. Controls are available in the range: IGBTs 1600 V, 2000 A and thyristors 10 kV, 3000 A (ratings are only indicative) and can cover the entire voltage ranges and ratings of a motor.

6.15 Energy conservation through solid-state technology

While the motor is operating under loaded

In the various types of static drives discussed so far, the supply voltage would adjust automatically at a level just sufficient to drive the motor to meet its load requirements. Hence it is not necessary for the motor to be applied with full voltage at all times: the voltage adjusts with the load. This is an in-built ability of a static drive that would save energy and losses. One would appreciate that most of the industrial applications consider a number of deratings and safety margins while selecting the size of the motor to cope with a number of unforeseen unfavourable operating conditions occurring at the same time. This is discussed in Chapter 7 (see also Example 7.1). The size of the motor is therefore chosen a little larger than actually required. As a consequence even when the motor may be performing its optimum duty, it may hardly be loaded by 60–80% of its actual rating causing energy waste by extra iron and copper losses and operating at a reduced p.f. Static drives are therefore tangible means to conserve on such an energy waste.

While performing a speed control

A very important feature of solid-state technology is energy conservation in the process of speed control. The slip losses that appear in the rotor circuit are now totally eliminated. With the application of this technology, we can change the characteristics of the motor so that the voltage and frequency are set at values just sufficient to meet the speed and power requirements of the load. The power drawn from the mains is completely utilized in doing useful work rather than appearing as stator losses, rotor slip losses or external resistance losses of the rotor circuit.

6.15.1 Illustration of energy conservation

In an industry there may be many drives that may not be required to operate at their optimum capacity at all times. The process requirement may require a varying utilization of the capacity of the drive at different times. In an induction motor, which is a constant speed prime-mover, such a variation is conventionally achieved by throttling the flow valves or by employing dampers.

There may be many types of the drives in an industry, particularly when it is a process industry. The most common drives are fans, pumps, and compressors etc., employed for the various utilities, storage and process activities of the plant. The plant may be chemical or a petrochemical, water treatment or sewage disposal, paper and pulp unit or even a crane or a hoist application.

The method of speed or flow control by throttling, dampening (vane control) or braking, indirectly reduces the capacity of the motor at the cost of high power loss in the stator and slip loss in the rotor circuit, as discussed above. These losses can now be eliminated with the effective use of static control variable-speed drives or fluid couplings. We will show, through the following illustrations, the energy saving by using such controls.

Throttle, dampening or vane control

For ease of illustration we will consider the characteristics and behaviour of a centrifugal pump which is similar in behaviour to radial/axial flow fans and centrifugal/screw compressors. Figure 6.38 shows the mechanical connection of a flow valve to control the output of the pump or the discharge of the fluid through the throttle of the valve. Figure 6.39 illustrates the characteristics of the pump:

- Discharge versus suction head, i.e. Q versus H_d and
- Discharge versus pump power requirement, i.e. Q versus h.p.

The rated discharge is Q_1 at a static head of H_{d1} and a motor h.p. P_1. In the process of controlling the discharge from Q_1 to Q_2 and Q_3, the valve is throttled, which increases the head loss of the system (or system resistance) from H_{d1} to H_{d2} and H_{d3} respectively. The operating point on the Q–H_d curve now shifts from point A_1 to A_2 and A_3 as a result of back pressure. The pump power requirement now changes from P_1 to P_2 and P_3 on the Q–h.p. curve. We can see that, due to added resistance in the system, while the discharge reduces, the corresponding power requirement does not reduce in the same proportion.

Flow control through static control

The same operating control, when achieved through the use of a solid-state control system will change the mechanical system to that of Figure 6.40. We have used a simple, full-wave, phase-controlled, variable-voltage solid-state device, employing a triac (two SCRs in anti-parallel). The voltage to the motor is monitored through a flow sensor, which converts the flow of discharge through a venturi meter to electrical signals. These signals control the voltage and adjust the speed of the motor to maintain a predefined discharge flow. The use of a throttle valve is eliminated, which in turn eliminates the extra head loss or system resistance. Figure 6.41 illustrates the corresponding characteristics of the pump with this type of flow/speed control.

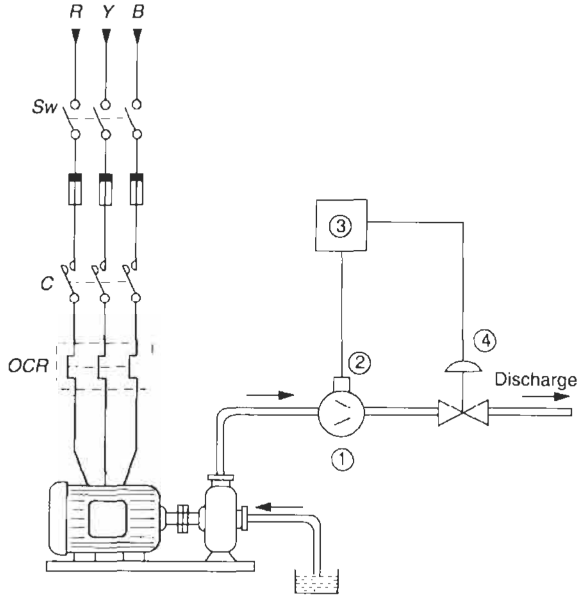

① Venturimeter – to measure the velocity of fluid
② Probe to sense the velocity of fluid
③ Flow meter or sensor – To convert the velocity of fluid to the rate of flow
④ Motorized sluice valve – To throttle the flow of fluid

Figure 6.38 Conventional throttle control

To reduce the discharge from Q_1 to Q_2 and Q_3 in this case, the speed of the pump, and so also of the motor, reduces from N_{r1} to N_{r2} and N_{r3}. The Q-H_d characteristics change according to curves N_{r2} and N_{r3} at a corresponding pump power requirement of P_2' and P_3' respectively, according to power curve P'. These power requirements are significantly below the values of P_2 and P_3 of Figure 6.39 when discharge control was achieved by the throttle. The system resistance curve remains unaffected, whereas the pump power demand curve traverses a low profile as in curve P' due to lower speeds N_{r2} and N_{r3}. The power requirement diminishes directly with speed in such pumps.

The energy saving with this method is considerable, compared to use of the throttle, which is also evident from curve P' of Figure 6.41.

6.15.2 Computation of energy saving

Consider Figure 6.42 with typical Q–H_d curves at different speeds and different system resistances, introduced by the throttle. Point A refers to the rated discharge Q_1 at rated speed N_{r1} and head H_{d1} when the throttle valve is fully open. Lets us consider the condition when the discharge is to be reduced to say, 0.67 Q_1.

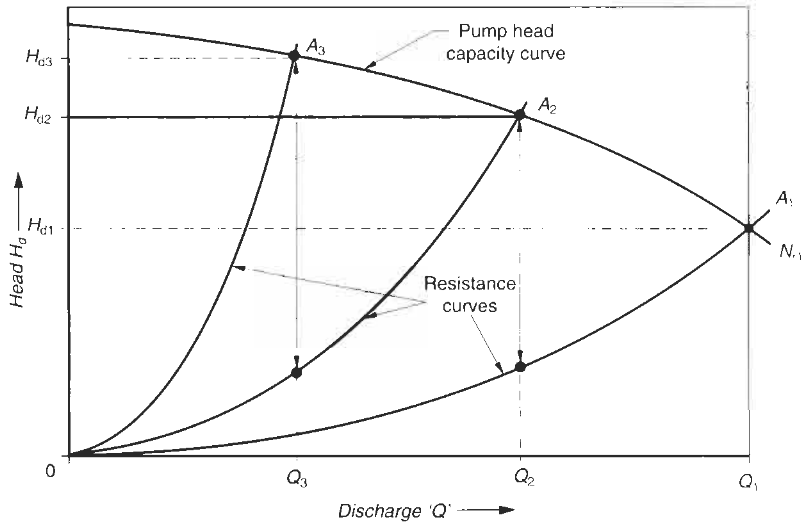

(a) Discharge versus suction head.

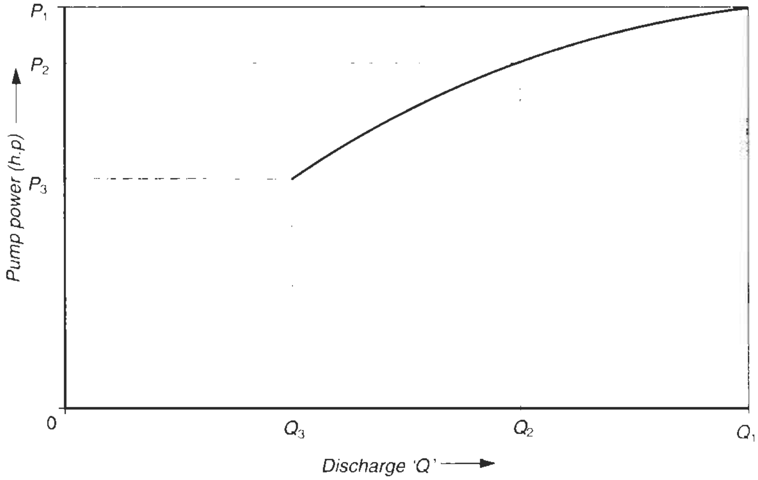

(b) Discharge versus pump power.

Figure 6.39 Power requirement and rate of discharge on a throttle control

Throttle control

The system resistance increases and discharge reduces at the same rated speed N_{r1}. This condition refers to point B, to which the earlier point A, has now shifted. The system now operates at a higher head H_{d2}, whereas the actual head has not increased. This condition has occurred due to higher system resistance offered by the throttle. The pump and the prime-mover efficiency will now reduce to 73% from its original 85%.

Static control

The same discharge of 0.67 Q_1 is now obtained without throttling the valve, but by controlling the speed of the motor to 0.65 N_{r1}. Point A now shifts to point C on the Q–H_d curve for 0.65 N_{r1}. For this reduced discharge of 0.67 Q_1 the suction head H_d also reduces to 0.45 H_{d1} and so also does the system resistance. The efficiency of the system is now set at 82%.

There is thus an obvious energy saving by employing static control over the conventional and more energy-consuming throttle control.

Extent of energy saving

Example 6.1
This can be determined by

$$P = \frac{H_d \cdot Q \cdot d}{36 \cdot \eta} \tag{6.7}$$

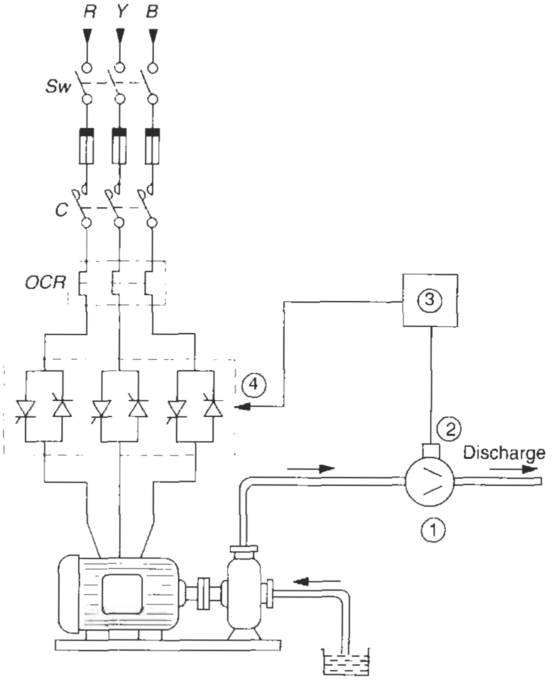

① Venturimeter – To measure the velocity of fluid

② Probe to sense the velocity of fluid

③ Flow meter or sensor – To convert the velocity of fluid to the rate of flow

④ Variable voltage (fixed frequency) static control

Figure 6.40 Energy conservation through static control

where

P = shaft input in kW
H_d = head in bar
Q = discharge in m^3/hour
d = specific gravity of the liquid in gm/cm^3
η = efficiency of the pump

(i) Rated power required by the pump

$$P = \frac{H_d \cdot Q \cdot d}{36 \times 0.85}$$

(ii) Power required when discharge is controlled through the throttle,

head $Hd_2 = 1.138\ Hd_1$

discharge $= 0.67Q$

$\eta = 0.73$

$$\therefore \quad \text{Power} = \frac{1.138\ H_{d1} \times 0.67\ Q \cdot d}{36 \times 0.73}$$

$$\therefore \quad \frac{\text{Ratio of power through throttle}}{\text{Rated power required}}$$

$$\frac{1.138 \times 0.67}{0.73} \times 0.85$$

$\simeq 0.89$

i.e. the power reduction with this method is around 11% of the rated power requirement.

(iii) Power required when discharge is controlled through static control, i.e. by speed variation;

Head $Hd_3 = 0.45\ Hd_1$

discharge $= 0.67\ Q$

$\eta = 0.82$

$$\therefore \quad \text{Power}\ \frac{0.45\ Hd_1 \times 0.67\ Q \cdot d}{36 \times 0.82}$$

$$\therefore \quad \frac{\text{Ratio of power through speed variation}}{\text{Rated power required}}$$

$$\frac{0.45 \times 0.67}{0.82} \times 0.85$$

$\simeq 0.31$

i.e. the power reduction through speed control is 69% that of the rated power requirement.

Thus the energy saving in this particular case by employing the method of speed control over that of throttle control will be

= 69%–11% = 58%

Example 6.2

To determine saving of costs through speed control, consider the following parameters, for the above case:

P = 100 kW

Discharge = 67% of the rated flow

Duration of operation at reduced capacity = say, for 25% of total working hours.

Energy tariff = say, Rs 1.2 per kWh

∴ Total energy consumed per year, considering 300 operating days/year

= 100 × 24 × 300

= 720 000 kWh

Energy consumed while operating at the reduced capacity for 25% duration = 0.25 × 720 000

= 180 000 kWh

∴ Energy saving = 0.58 × 180 000

= 104 400 kWh

And total saving in terms of cost = 1.2 × 104 400

= Rs 125 280 per year

Example 6.3

Energy saving in a slip recovery system

Consider an I.D. fan of 750 kW, running at 75% of N_r for at least 20% of the day. Considering the load characteristic in cubic ratio of speed,

∴ P at 75% speed

$= (0.75)^3 \times 750$ kW

$\simeq 316$ kW

and slip power,

$P_s = (1 - 0.75) \times 316$ kW

$= 0.25 \times 316$

$= 79$ kW

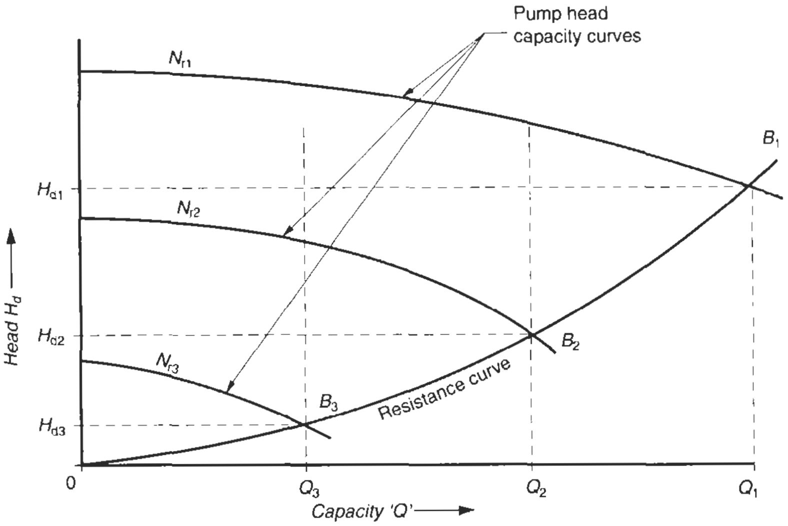

(a) Discharge versus suction head

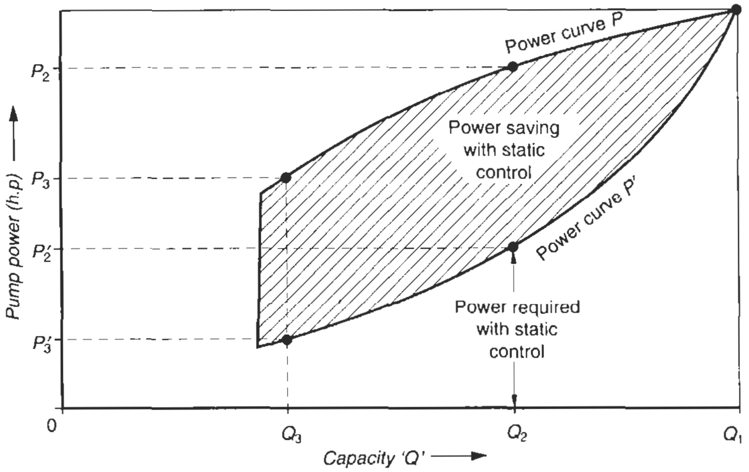

(b) Discharge versus pump power

Figure 6.41 Power saving with the use of static control compared to throttle control

Considering the efficiency of slip recovery system as 95% and 300 operating days in a year, the power feedback to the main supply source through the slip recovery system in 20% of the time,

$= [0.95 \times 79] \cdot [0.2 \times 300 \times 24]$

$= 108\ 072$ kWh

And in terms of costs at a tariff rate of Rs 1.2 per unit,

= Rs $1.2 \times 108\ 072$

= Rs 129 686.4 per year

6.16 Application of static drives

6.16.1 Soft starting (*V/f* control)

This facilitates a stepless reduced voltage start and smooth acceleration through control of the stator voltage. The smooth voltage control limits the starting torque (T_{st}) and also the starting inrush current (I_{st}) as illustrated in Figure 6.43. This is achieved by arranging a full-wave phase-controlled circuit by connecting two SCRs in anti-parallel or a triac in each phase as illustrated in Figure

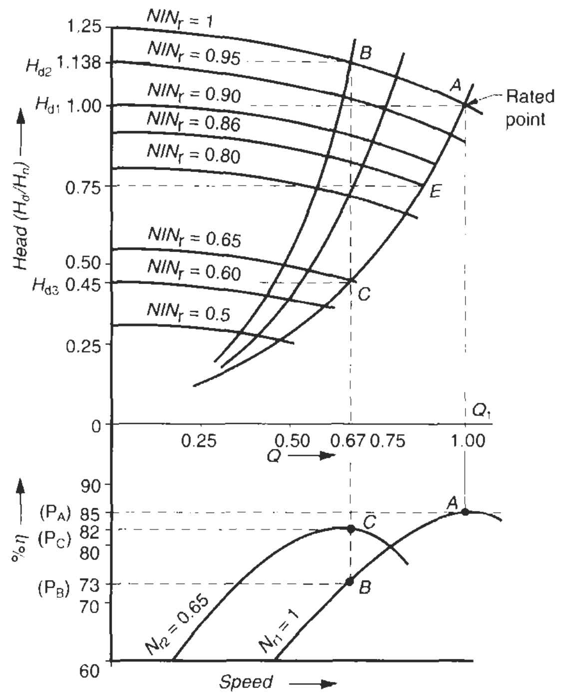

H_d – Head
H_n – Rated head
N – Actual speed
N_r – Rated speed
Q – Discharge
Q_n – Rated discharge
η – Pump efficiency

Figure 6.42 Discharge versus head curves of a pump at different speeds and resistances introduced by throttle

6.44. Varying the firing angle and the applied voltage will also affect the dynamic phase balancing in each phase, and controls the I_{st} and T_{st} as programmed. Increasing the firing angle decreases the angle of conduction and causes the voltage to decrease, as seen in Figure 6.23. The starting voltage, i.e. the angle of firing, is pre-set according to the minimum voltage required, to ensure a permissible minimum T_{st} and maximum I_{st} which can be predetermined with the help of the motor characteristics and the load requirements. The voltage is raised to full, gradually and smoothly, but within a pre-set time, as determined by the motor and the load characteristics. The size of the static starter will depend upon the starting current chosen and the corresponding starting time. Generally, the normal practice of the various manufacturers, as noted earlier, is to define the size of their soft starters, based on a starting current of 150% of I_r and a starting time of up to one minute. A higher starting current or a higher duration of start may call for a larger starter. The starter therefore provides no control over the starting current, which is a function of the applied voltage.

It is also possible to perform a cyclic duty having some no load or a light load and some fully loaded periods, as discussed in Section 3.3. The firing angles of the SCRs or the triacs can also be programmed accordingly to reduce the applied voltage to the motor to a minimum possible level, during no-load or light-load periods, and hence conserving on otherwise wasted energy by saving on the no-load losses. Different mathematical algorithms are used to achieve the desired periodic T–N characteristics of the machine.

During start-up, the firing angle is kept high to keep the V and I_{st} low. It is then reduced gradually to raise the

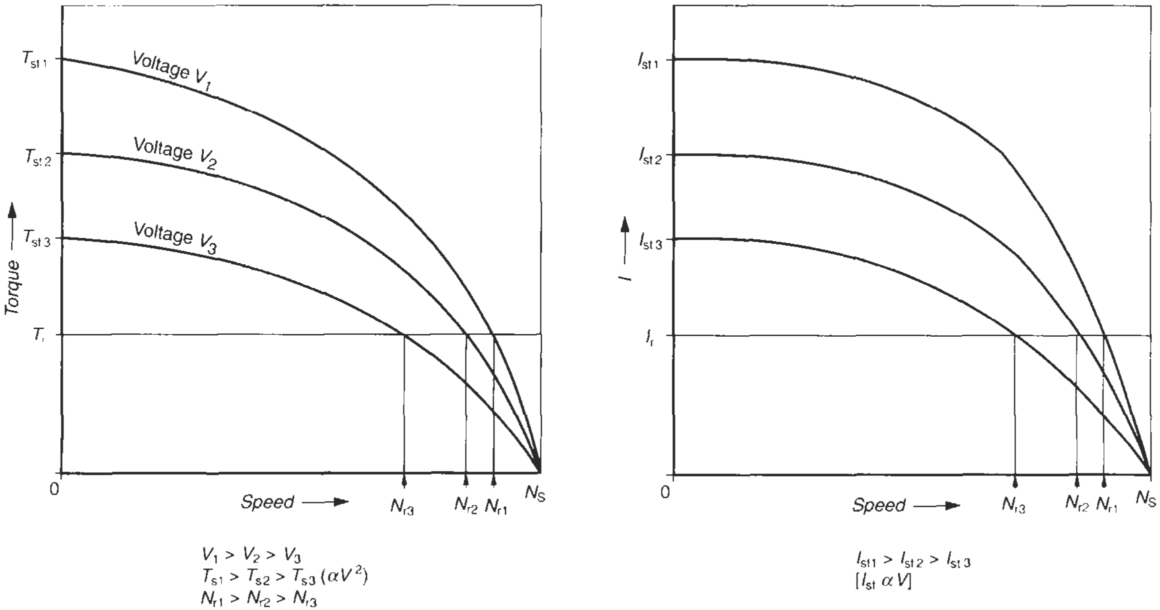

$V_1 > V_2 > V_3$
$T_{s1} > T_{s2} > T_{s3}\ (\alpha V^2)$
$N_{r1} > N_{r2} > N_{r3}$

(a) T_{st} control

$I_{st1} > I_{st2} > I_{st3}$
$[I_{st}\ \alpha\ V]$

(b) I_{st} control

Figure 6.43 Speed control by varying the applied voltage (use of higher-slip motors)

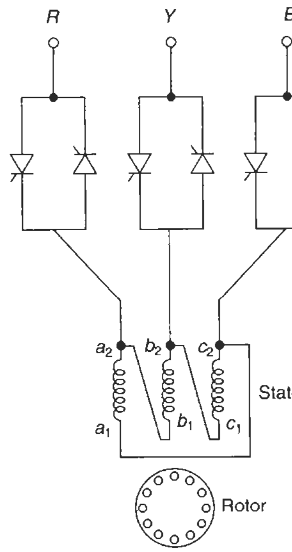

Figure 6.44 Stator static voltage control (soft starting)

voltage to the required level. There is thus a controlled acceleration. The maximum I_{st} can also be regulated to a required level in most cases, except where the T_{st} requirement is high and also needs a higher starting voltage, when it may not be possible to limit the I_{st} to the required level. The scheme is a simple reduced voltage start and does not facilitate any speed control. Since the starting current can now be regulated to a considerable extent, the scheme is termed a soft start. Now $T_{st} \propto V^2$ and $I_{st} \propto V$. This may be a good alternative to Y/Δ or autotransformer starting by eliminating current overshoots during the changeover from Y to Δ in a Y/Δ or from one step to another in an autotransformer start. It also prevents an open transient condition (Section 4.2.2(a)). Also in a soft start the switching SCRs or the triacs are bypassed through a contactor after performing a starting duty similar to a Y/Δ, A/T or a wound rotor start. In conventional startings also the star contactor, the autotransformer or the external resistances, respectively, are cut off from the circuit, after performing their starting duty. Such a provision protects the starter unit from avoidable voltage strain, saves heat losses and cools it to prepare it for the next switching operation. The starter is also free to perform switching duties on other machines of a similar size connected on the same line, if so desired, to save costs. The starter can be used as a switching kit for a group of similar-sized motors.

The voltage can be varied from 0% to 100% and hence the I_{st} can be limited to any required level. Such a linear voltage variation may be suitable in most cases, particularly when the motor has to pick up a light load or is at no-load. Motors driving heavy inertia loads or loads requiring a high starting torque or both may not be able to pick up smoothly with a linear voltage rise from 0 volts. This may cause a locked rotor or stalling until the voltage rises to a level sufficient to develop an accelerating torque, capable of picking up the load. It is also possible that it may need a prolonged starting time not commensurate with the thermal withstand time of the motor or a larger starter. In such cases, it is essential to have a minimum base or pedestal voltage as illustrated in Figure 6.45(a). The voltage is adjusted to the lowest possible level, so that the I_{st} is kept as low as possible. In Figure 6.45(b) we illustrate a motor with a normal starting current of 650% I_r at the rated voltage. To limit this to a maximum of 350% of I_r, we have provided a base voltage of about 350/650 or 54% of the rated voltage. The minimum T_{st} is, however, matched with the load requirement to attain the rated speed within its thermal withstand time. For more details see Section 3.5 and Example 7.1. The voltage is then raised so that during the pick-up period the I_{st} is maintained constant at 350%, until the motor reaches its rated speed.

Since it is not practical to custom build each drive, the normal practice by manufacturers of soft starters is to provide a variety of motor parameters to which nearly all motors will fit and the user may select the motor that best suits the load requirements. The other advantages of a solid-state soft start are that an unbalanced power supply is transformed to a balanced source of supply automatically by suitably adjusting the firing angle of each SCR or triac through their switching logistics. Also a low starting current can economize on the size of switchgears, cables and generator where a captive power is feeding the load.

6.16.2 Soft stopping

The normal method to stop a motor is to do it instantly. This is accepted practice in most cases and the machine stops as shown in equation (6.8) discussed later. A higher moment of inertia (MI) of the driven masses will mean a reasonably longer duration to come to a standstill, while a low MI will mean a faster stop. But in loads requiring high braking torques, such as conveyor systems, escalators and hoists, the stopping time may be too short. In some cases, such as a pump duty, the stoppage may be near-abrupt. Such a situation is not desirable and may cause shocks to the motor. In a pump, an abrupt stoppage may cause severe shocks and hammering effects on pipelines, due to backflow of the fluid. Shocks may even burst pipelines or reduce their life when such stoppages are frequent. They may also damage non-return valves and other components fitted on the lines and thus weaken the whole hydraulic system.

A gradually reducing voltage rather than an instant switch OFF is therefore desirable for all such applications. This would also gradually reduce the flow of the fluid, leading to a strain-free and smooth stopping of the machine. In such cases, a soft stop feature, similar to a soft start, can be introduced into the same starter, which would gradually reduce the stator voltage and facilitate a smooth and shock-free stop.

6.16.3 Slip recovery system (to control wound rotor motors)

As discussed earlier, the motor speed–torque characteristics depend largely upon the rotor current

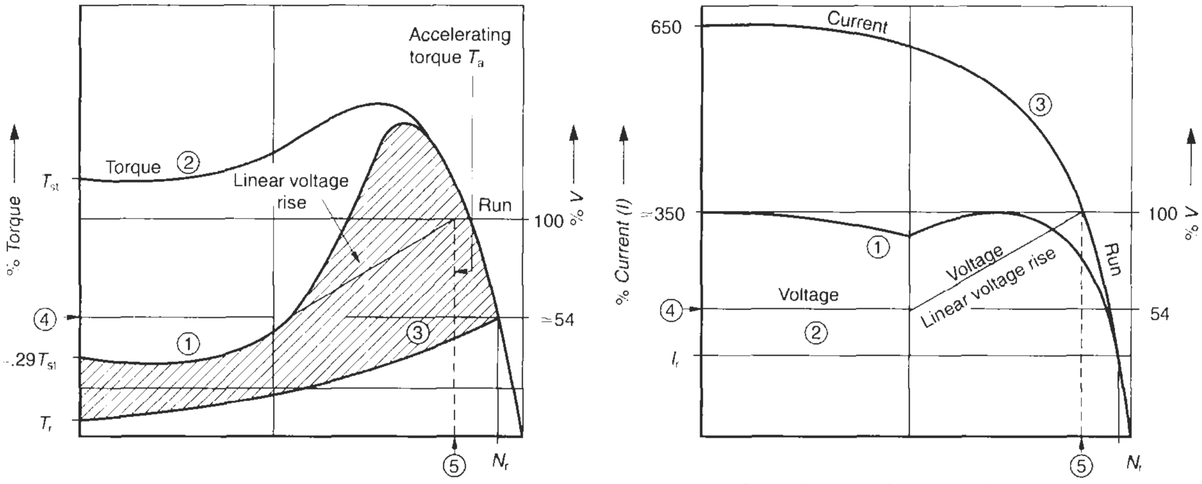

(1) Approximate torque curve during a soft start
(2) Normal torque curve
(3) Load torque
(4) Base or pedestal voltage
(5) Soft starter can be removed from the circuit and used to start other motors, if desired.

(a) Torque characteristics

(1) Approximate current curve during a soft start
(2) Voltage can be adjusted to maintain the starting current constant at 350% (or any desired value)
(3) Normal current curve
(4) Base or pedestal voltage
(5) Soft starter can be removed from the circuit and used to start other motors, if desired.

(b) Current characteristics

Figure 6.45 Current and corresponding torque characteristics of a motor during a soft start

(equation (1.1)) and rotor resistance (equation (1.3)). The higher the rotor current or resistance, the higher will be the starting torque as illustrated in Figure 6.46, and the higher will be the slip and slip losses as well as reduced output. The maximum torque is obtained when R_2 and ${}_{ss}X_2$ are equal. Speed control can be achieved by varying the rotor resistance or by varying the rotor current I_{rr}. The slip recovery system provides an ideal control, employing a basic converter unit, supplemented by an inverter unit in the rotor circuit of the motor, as illustrated in Figure 6.47. The inverter unit controls the power flow from the rotor to the mains, thus acting as a variable resistance. The stator operates at a fixed frequency.

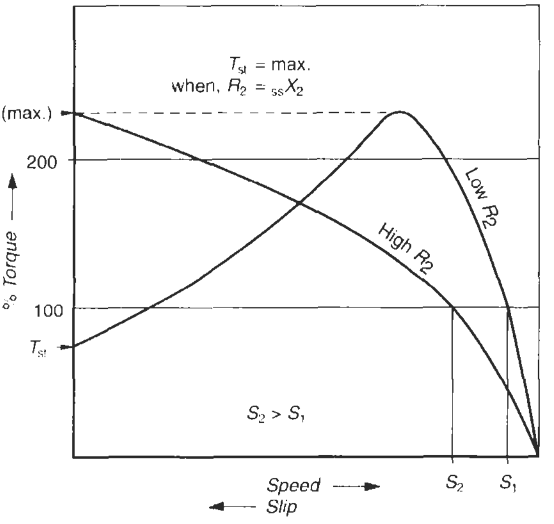

Figure 6.46 Effect of rotor resistance on torque

The inverter may be a current source inverter, rather than a voltage source inverter (Section 6.9.4) since it will be the rotor current I_{rr} that is required to be varied (equation (1.7)) to control the speed of a wound rotor motor, and this can be independently varied through the control of the rotor current. The speed and torque of the motor can be smoothly and steplessly controlled by this method, without any power loss. Figures 6.47 and 6.48 illustrate a typical slip recovery system and its control scheme, respectively.

The major difference in this configuration from that of a V/f control is the variable voltage and frequency from the rotor circuit that is first converted to a d.c. voltage and then inverted to a fixed frequency supply voltage in order to feed the slip power back to the supply source. The converter–inverter combination acts like a variable current source and in turn like a variable resistance. The power saving by this method is twofold. First, the power loss in the external resistance is totally eliminated and second, the rotor power is fed back to the main supply source. This system has a very high initial cost and is therefore preferred for large wound motors above 250 kW. Nevertheless, it is advisable to employ a slip recovery system even for lower rated motors which are required to perform frequent speed variations. Also the regular power saving would offset the heavy initial cost in the

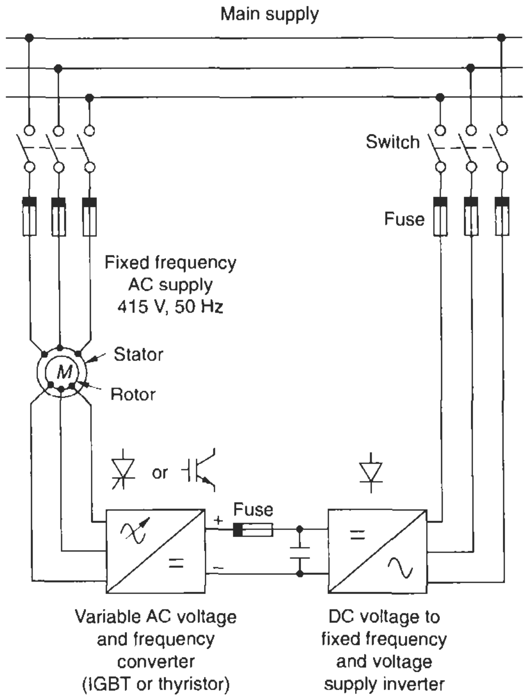

Figure 6.47 Slip-ring motor control showing slip recovery system

first few years only and then provide a recurring energy and cost saving.

6.16.4 Application of solid-state technology in the operation of a process plant

With the use of static drives for speed control of induction motors, through open or closed-loop feedback control systems, it is now possible to monitor and control a process line automatically, which would not be feasible if carried out manually. We will consider a simple process line of a continuous galvanizing plant to demonstrate the application of this technology in automatic and accurate control of a process industry.

The total engineering of such a system will first require a thorough study of the process, dividing this process into various activities and then monitoring and controlling each activity through these controls to achieve the required process operation.

Figure 6.49 illustrates a continuous hot-dip galvanizing line to perform zinc coating of MS sheets so that the production line has no discontinuity even when the supply of sheet is exhausted, or during a changeover from one feeding route to another or at the finishing line during a changeover from a completed roll to an empty one. All this is possible with the use of this technology as described below.

The process line indicates only the vital areas. There may be many more auxiliary drives and controls, interconnected within the same process line, to adjust the process and its quality more closely. They have not been shown in the figure for the sake of simplicity. We do not discuss the duration of one cycle, its speed, the temperature of the furnace or the hot dip zinc vessel etc. and other important parameters. These all are a matter of detailed engineering and process requirements. We describe the process only broadly, to give an idea of applying this technology to a process line for very precise control. We employ encoders to give a pulse output of speed of a particular drive, and PLCs* to implement the process logics through the various drives.

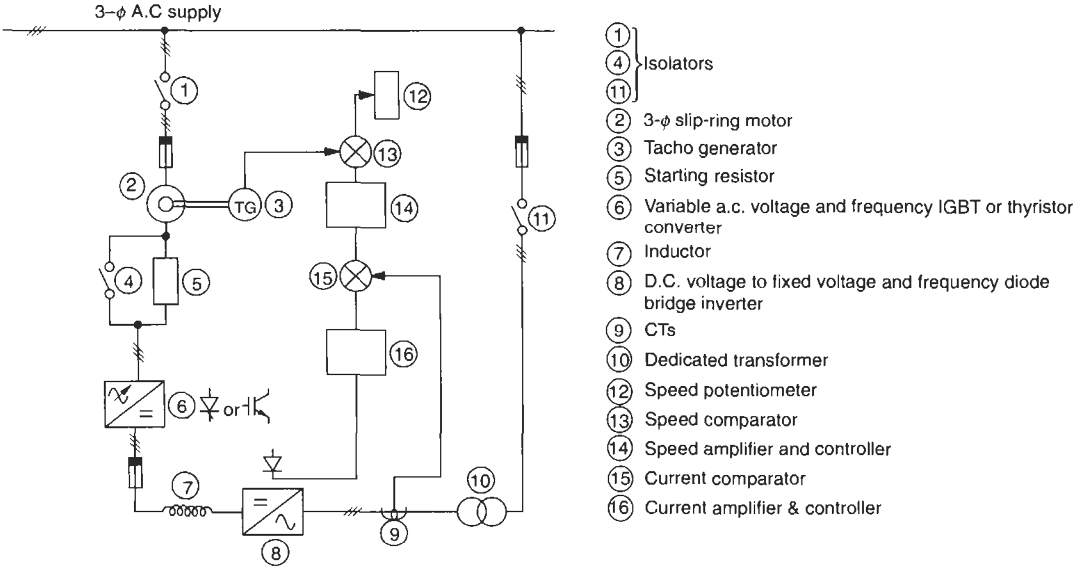

Figure 6.48 Typical block diagram of a large slip recovery system using IGBTs or thyristors

---

*PLC – Programmable logic controller (the registered trade mark of Allen Bradley Co. Inc., USA).

The use of PLCs is essential in the control of motors to closely monitor the operating parameters of the process line on which the motors are connected. The inverter unit controlling the motors then conducts the required correction in each motor speed through its switching logistics, which may be activated by the motor side V, f, I_m, I_a or β etc., depending upon the inverter logistics being used. All such parameters are predefined for a particular process and are preset.

A brief description of the process and the use of static drives

We have divided the total process line into three sections:

Uncoiler section

1 Pay-off reel no. 1 feeds the raw MS sheet to the process section via feed pinch rolls nos 1 and 2 which straighten the sheet before it enters the welder.

2 To maintain continuity and achieve an uninterrupted process line a second parallel feed route is provided through a second pay-off reel no. 2.

3 These rolls are driven by motors M_1 and M_2 whose speed is controlled through the tension of the travelling sheet. The tension of the sheet is adjusted by monitoring the diminishing diameter of the pay-off roll and the thickness of the sheet.

4 The pay-off roll is unwound by the tension of the sheet, caused by the speed of the recoiler at the finishing line and the bridles positioned at different locations. The pay-off roll motors therefore operate in a regenerative mode and can feed-back the energy thus saved to the source of supply, if desired. This can be done by using a full-wave synchronous inverter, as shown in Figures 6.31 or 6.33.

However, this is a more expensive arrangement. A more economical method is to use a full-wave, diode bridge converter and an IGBT inverter unit combination as shown in Figure 6.50 in place of an additional thyristor or IGBT feedback circuit. The d.c. link bus is now made a common bus for all the drives operating on the process. During a regenerative mode, such as during uncoiling the pay-off reels, the voltage of the d.c. bus will rise and will be utilized to feed the other drives. This process will draw less power from the source. The regenerative energy is now utilized in feeding the process system itself rather than feeding back to the source of supply. There is now only one converter of a higher rating, reducing the cost of all converters for individual drives and conserving regenerative energy again at a much lower cost.

There is no need to introduce a resistance for the purpose of dynamic braking for the individual drives, but a large resistance will be necessary on the d.c. bus to absorb the heat energy during shutdown (braking) of the process. The useful energy during shutdown cannot be fed back to the source due to the configuration of the converter–inverter combination. This arrangement can feed the regenerative energy to its own process only.

The scheme will also facilitate conservation of regenerative energy if there are more of such drives without any additional cost.

5 Shear no. 1 is used to shear the edges of the sheet of pay-off reel no. 1 at the beginning as well as at the end of the coil before it enters the welder to smooth this for a correct welding with the outgoing edge. At the beginning of the coil this edge is welded with the tail end of the previous coil and at the end it is welded with the edge of the fresh coil at the beginning from pay-off reel no. 2. Pay-off reel no. 2, driven by motor M_2, is arranged parallel to pay-off reel no. 1 to provide a second feed route for an uninterrupted and continuous process flow.

6 The deflector roll guides the sheet to another pinch roll no. 4 to carry out precise alignment of the edges before they enter the welder.

7 Pinch roll no. 4 aligns the edge of the sheet through a feedback control.

8 For further alignment of the edge width just before entering the welder the sheet is guided again through an entry-side guide.

9 With the help of bridle no. 1 driven by motors M_3 and M_4, the uncoiler section speed is controlled by monitoring the tension of the travelling sheet and hence maintaining constant speed of the sheet in the uncoiler section. The tensile difference of T_1 and T_2 determines the speed of the uncoiler. Speed and tension of the sheet must remain constant for absolute synchronization between the uncoiler process and the recoiler sections.

10 To allow for welding time, a buffer of a certain sheet length, in the form of entry accumulator, is maintained, generally in a vertical formation, to save space. This feeds the line ahead until the welding operation is completed and the second route is installed to feed the process.

11 The time gap in carrying out the welding is compensated by raising the speed of the second route now introduced until the predefined buffer of an excess length of sheet is produced with the help of accumulator drive motor M_5.

Process section

12 The tension and speed in the process section is maintained again with the help of bridle no. 2, driven by motors M_6 and M_7.

13 The sheet is now fed through a pair of guide rollers to a furnace section through a degreasing tank, where it is preheated for drying and raising the temperature of the sheet up to a required level (400–465°C typical) before it enters the hot galvanizing pot for the desired thickness of zinc coating. The movement of the sheet through the furnace is helped by motors M_8 and M_9.

14 The hot-treated sheet is cooled to the required level by fans, driven by motors M_{10} and M_{11} before it enters the molten zinc pot.

15 The required thickness of zinc coating is achieved by dipping it in the molten zinc pot for a preset time. The thickness of the coating is monitored by two rollers through which the coated sheet is passed. The time of welding, degreasing, heating and hot

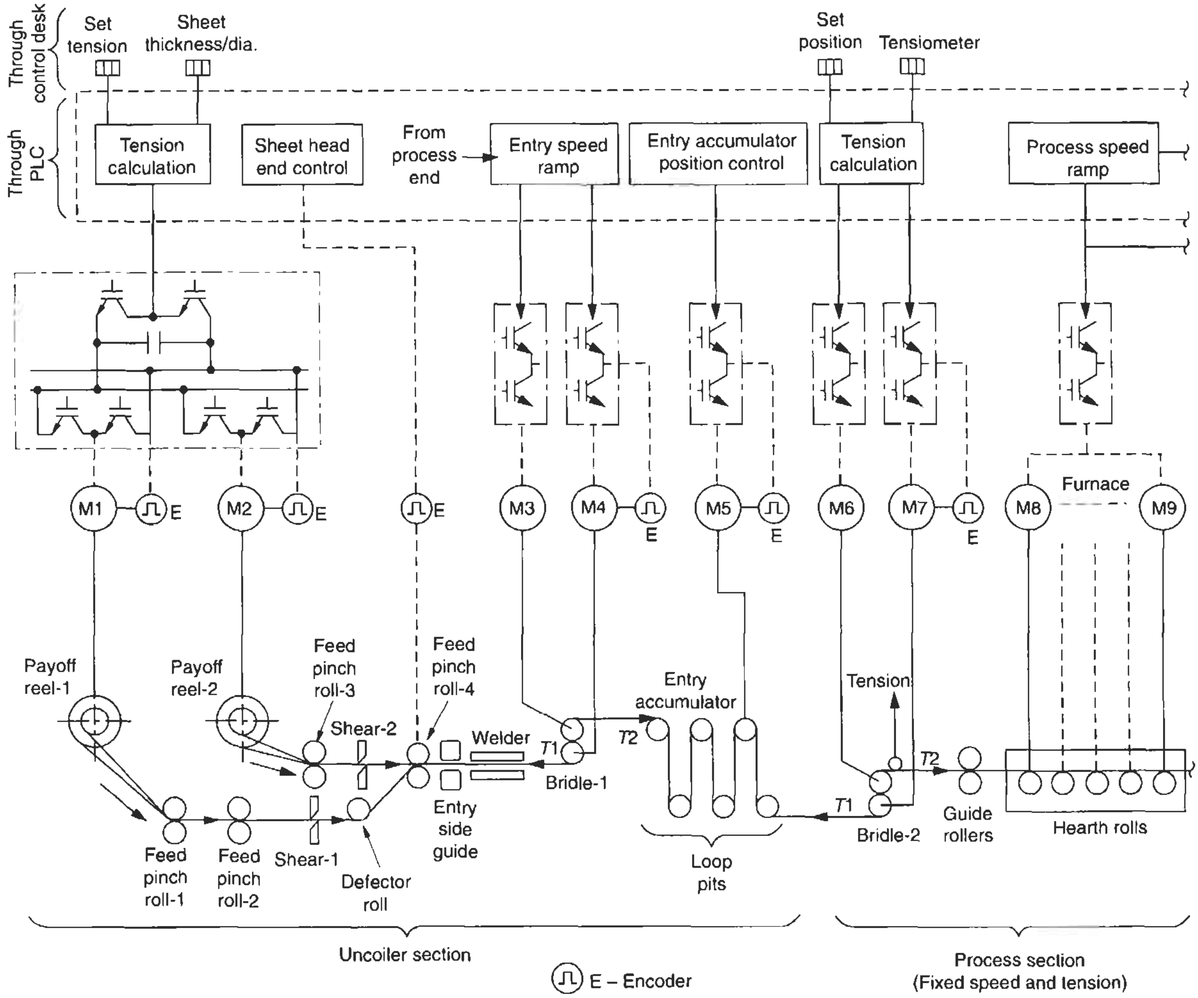

dipping are synchronized so that the welding operation takes the same time as the degreasing, heating and hot dipping.

16 Bridle no. 3, driven by motors M_{12} and M_{13}, is the process section master controller and controls the speed and travel of the sheet in the process section.

Coiler or the finishing section

This section is almost the same as the uncoiler section.

17 The hot galvanized sheet is cooled by blowers and fed to an exit accumulator driven by motor M_{14}, similar to the entry accumulator, via a deflector roll to adjust its position.

18 Before the finished sheet is finally cut into lengths as required or rolled into recoilers its exit speed and tension is monitored and controlled again by bridle no. 4, driven by motors M_{15} and M_{16}.

19 The sheet may also be inspected for the quality of welding and checked for pin-holes by a weld-hole detector before it is finally cut into lengths or wound onto rolls.

20 It then passes through a pair of guide rollers, pinch rollers no. 5, a shear, an edge guide unit (to align the width of the sheet) and a final alignment pinch roll no. 6 as shown.

21 The recoiler is driven by motor M_{17} that adjusts its speed and tension as calculated for the whole process line. It is this drive and the bridles that maintain the required tension throughout the process and make the pay-off reel drives operate as regenerative units.

Note

- We have considered all drives as a.c. although d.c. drives are also in use. Earlier only d.c. drives were used.
- IGBT inverters (the latest in the field of semiconductor devices) have been considered.
- All activities can be monitored through a control desk.
- All controls and precise adjustments are carried out by a PLC.

6.16.5 Other applications

In view of the low maintenance cost and high reliability of solid-state devices, combined with precision and

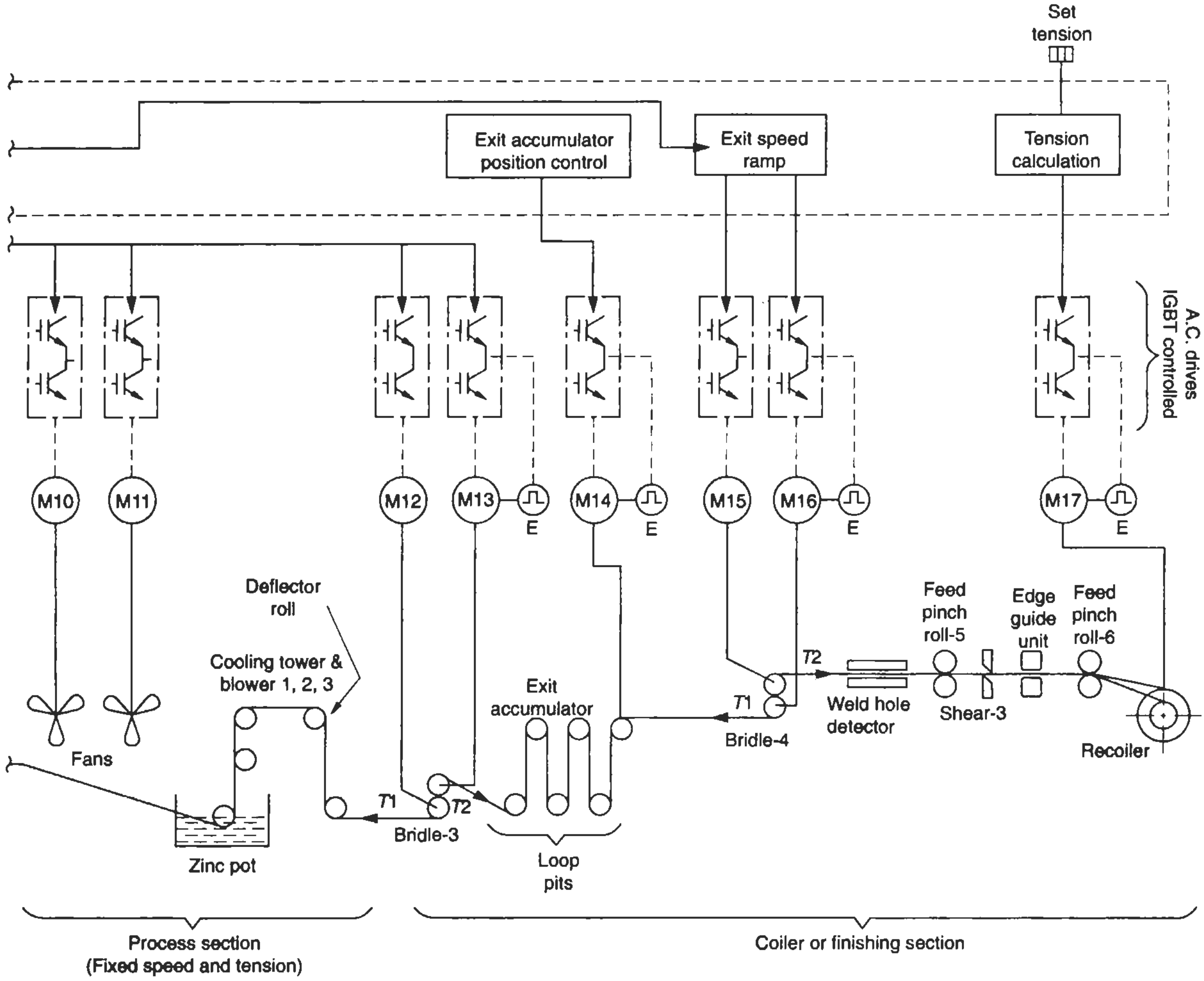

Figure 6.49 Typical process layout of a continuous hot dip galvanizing line

accuracy through a feedback network, this technology finds many applications in such process industries as the following:

- Textiles
- Sheet and plate metal working
- Packaging
- Material handling
- Steel rolling
- On- and off-shore drilling platforms
- Machine tools
- Process industries such as sugar, printing machinery, cement mills, chemicals, paper
- Thermal power plant auxiliaries such as flow control of primary air fan, ID fan and forced-draught fans, boiler feed pumps circulating water pumps and condensate pumps, coal handling plant (e.g. ball mill, wagon tippler, and stacker reclaimer)
- Mining. A solid-state semiconductor device has no physical contacts to make or break the current. There is thus no arc formation during switching of these devices. Therefore they have a very wide application in mines and other hazardous areas using flameproof a.c. motors where d.c. machines cannot be used.

6.17 Speed variation through variable-speed fluid couplings

The speed of the motor can also be varied by a variable-speed fluid drive as discussed in Section 8.4.

6.18 Static drive versus fluid coupling

Variable-speed drives are essential for many industrial applications requiring variable operating parameters during the course of operation. Such variations can be in the flow of fluid and pressure of air or gas etc. The con-

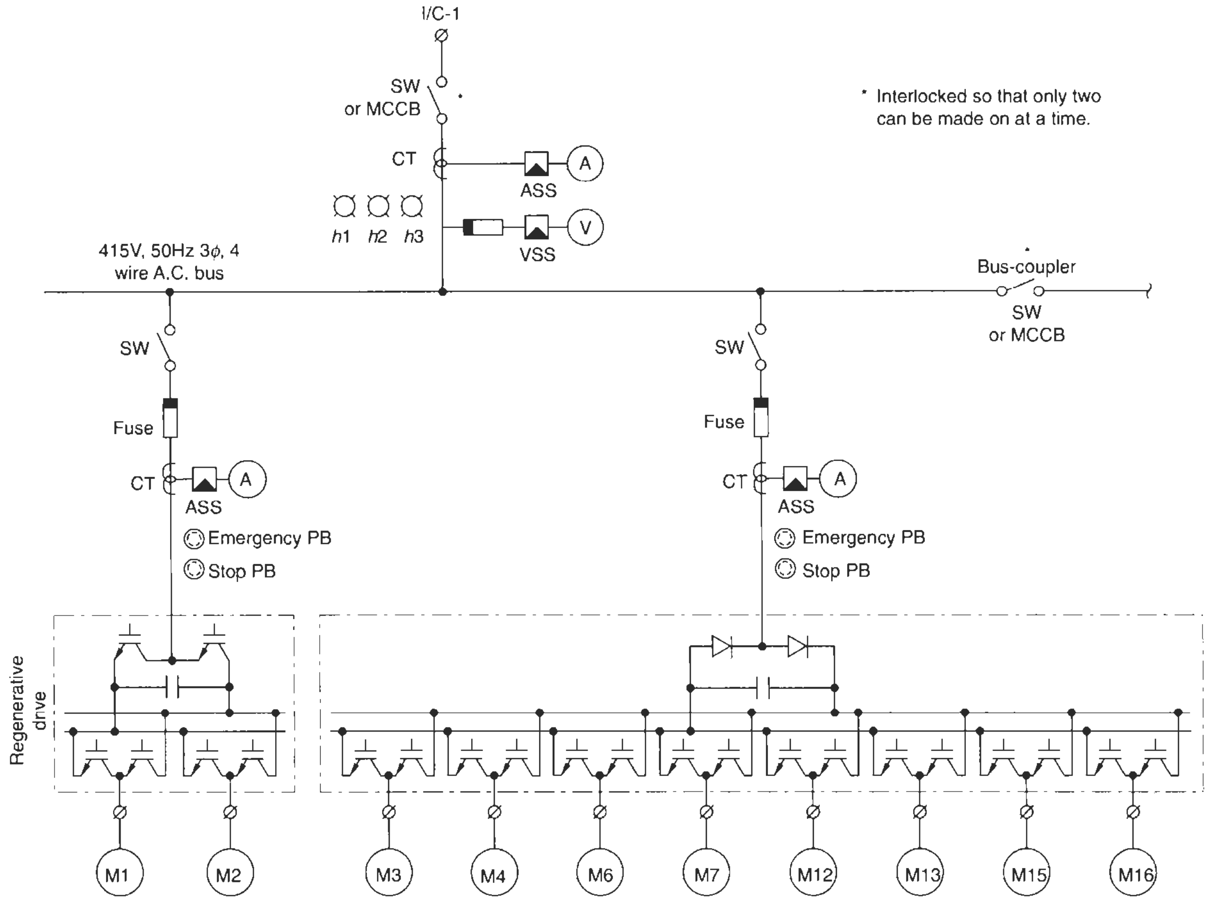

ventional method of throttle control through a vane or a damper causes a considerable waste of energy. To obtain a variable speed and yet save on energy, one can use either a static drive as discussed earlier or a variable speed fluid coupling (Chapter 8). The choice between the two will be a matter of system requirements and an overall assessment of the ease of application, economy and accuracy of speed control in addition to the amount of energy it will be able to conserve. The application engineer would be a better judge to make a more appropriate choice between the two, based on system requirements. We give a brief comparison between these drives in Table 6.5. This comparison should help in making a more judicious choice of drive.

Fluid couplings larger than, say, 400 kW can be employed with ease in achieving the required speed control. They also provide a mechanical coupling between the drive and the load. A variable-speed fluid coupling also results in energy saving along the lines as discussed in Example 6.1. In some countries this device is classified as 'energy saving' and attracts subsidies from the state. They are simple to operate and are highly economical in their initial cost compared to static drives. The only case against their use, despite the exorbitant costs of static drives, is their recurring power losses, as mentioned in Table 6.5 (items 19 and 20). It is a constant and recurring drain on useful energy. A static drive, irrespective of its cost, has a pay-off period of three to four years, depending upon the size of drive, frequency and duration of speed control and its accuracy. Thereafter it achieves regular and high energy saving. This advantage is not possible in a fluid coupling due to higher power losses. Conservation of energy is therefore the main criterion in the selection of static drives.

Until a few years ago, when static technology was still in its infancy, variable-speed fluid drives had very wide application. With the advent of static technology, the trend is shifting in favour of static controls, particularly for drives that have to undergo frequent and wide speed variations during their normal course of operation, or which require very accurate speed control. For applications not needing very precise speed control or wide variations in speed (e.g. high-capacity pumps or ID fans) variable-speed fluid couplings are still the best choice.

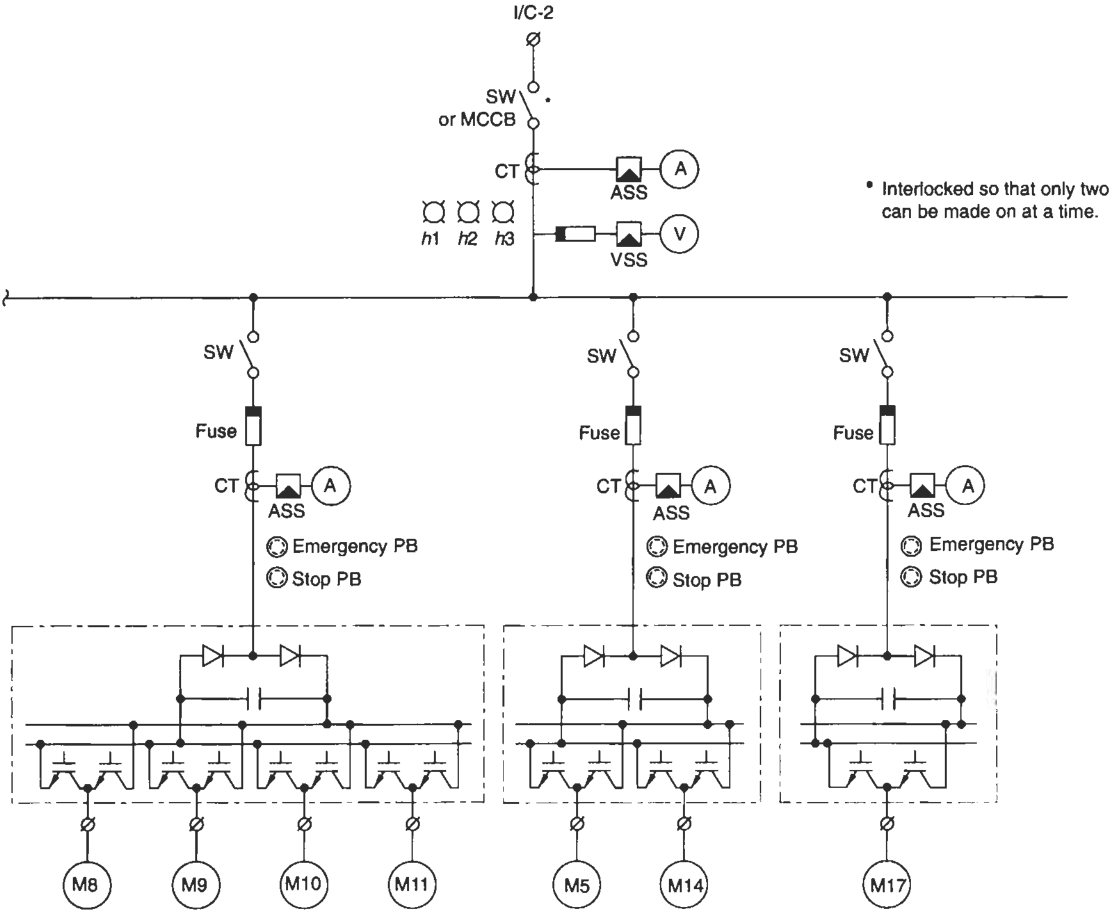

Figure 6.50 Power distribution arrangement for the galvanizing process of Figure 6.49

6.19 D.C. drives

The use of d.c. motors for precise speed controls is long practised and it had been a unanimous choice until a few years ago. It still is, in a few applications, purely on cost considerations. But its use is now gradually waning out in the face of a more advanced technology in static controls to control an a.c. motor (for very wide and accurate speed variations, a variable-speed fluid coupling may not be suitable). But older installations still use d.c. motors and may continue to do so for a few more years, until the next modernization of the installation, although many leading manufacturers have discontinued the manufacture of such machines due to a sharp decline in demand. There are a few that are still in the field and may continue until there is a demand for replacements and extensions of existing load lines. A few manufacturers who have discontinued the production of this machine have established links with those still in the field to cater for replacements. Therefore this book has not dealt with this machine in more detail.

To make a better comparison between an a.c. and a d.c. drive we illustrate in Figure 6.51 for a d.c. motor, the likely variation in its torque, with variation in the applied voltage, below the base speed and with a constant voltage but variable field strength, above the base speed.

6.20 Braking

Braking results in heating, irrespective of the method used. When the braking is external, the heat will appear in the external circuit and the motor windings will remain unaffected. But when it is internal, the entire braking heat will be generated within the motor windings. Due consideration of this must be made when selecting the motor rating, particularly when the loads are heavy and the braking frequent. An analogue to the starting time gives the braking time t_b as

$$t_b = \frac{GD_T^2 \cdot N}{375 \cdot T_b} \text{ seconds (s)} \tag{6.8}$$

where $N = N_r - N_{r1}$, i.e. speed reduction in r.p.m.
T_b = braking torque in mkg

Table 6.5 Comparative study of performance of an a.c. drive, variable speed fluid coupling and a d.c. drive

Features	*A.C. drive*	*Variable speed fluid coupling*	*D.C. drive*
1 Manufacturing range	Any range	40 to 10 000 kW by GE, USA In India up to 3000 kW by Pembril Engineering and Fluidomat	0.1 to 10 000 kW
2 Starting acceleration	Soft and stepless start	Soft and stepless start	Soft and stepless start
3 Starting current (I_{st})	Can be controlled to any desired level subject to the minimum T_{st} required	Cannot be controlled. Although duration of the starting inrush is very short because of no-load start	Can be controlled to any desired level. Normally up to 1.5 times the rated current
4 Starting torque (T_{st})	As desired	As desired	As desired up to 5–6 times the T_r, through field forcing (i.e. by raising the field voltage during the start up period)
5 Variation in torque with speed	• Through V/f control, the torque can be kept constant $\left(T \propto \phi_m \cdot I_r \propto \frac{e_2}{f_r} = \text{constant}\right)$ up to a desired speed, N. Since h.p. ∝ T.N., h.p. varies with speed • Beyond N, the h.p can be kept constant by keeping the voltage fixed and raising f (h.p. ∝ T.N). The speed-torque characteristic is similar to a d.c. machine as shown in Figure 6.51	$T \propto N^2$	Characteristics are similar to an induction machine as shown in Figure 6.51: (i) Up to the base speed N, torque can be kept constant through armature voltage control, $V \propto I_a$, field current ($I_m \propto \phi$), remaining constant ($T \propto \frac{\phi \cdot I_a}{N}$ = constant, I_a, being the armature current) (ii) Beyond the base speed N, h.p. can be kept constant (h.p. ∝ T.N.) by reducing the field current ($I_m \propto \phi$) and keeping the armature voltage as constant (I_a = constant). Torque will now diminish exponentially, since ϕ diminishes and N rises, N being in denominator, has the same effect as ϕ (Fig. 6.51)
6 Magnetising losses of the motor	Vary with f	Remain at 100%	Remain constant for speed variations within the required speed N, as the field current is kept fixed and only the armature voltage is varied. For speed variations beyond N, however, when the armature voltage is kept constant and the field current is varied, the magnetizing losses also vary
7 Copper (I^2R) losses	Low at reduced speeds, due to low magnetizing current (I_m) and correspondingly lower I_1	No reduction because of same magnetizing losses and therefore relatively higher I_1	At lower speeds more than the a.c. drives as I_m remains the same and a relatively higher I_a
8 Power factor	Although I_m is low, overall p.f. may be slightly lower on the line side, because of harmonic contents and inclusion of L. L is introduced to (i) Limit the current harmonics and (ii) Limit the rate of rise of current, i.e. ripples (di/dt)	Low as I_m remains the same	Lower than the a.c. drive because of same field current
9 Combined efficiency of the motor and the drive	At rated speed 90% and more. Reduces slightly at lower speeds because of poor efficiency of the	(i) At rated speed $\simeq$ 87–90% (coupling efficiency as high as 97–98%)	At rated speed up to 80–90%. At lower speeds reduces more than the a.c. drives because of

Features	*A.C. drive*	*Variable Speed fluid coupling*	*D.C. drive*
	machine at lower speeds. Losses in the a.c. controls do not normally exceed 0.5–1.5%	(ii) At two thirds of the input speed = 50% (iii) at 20% of the input speed = 66% See Figure 6.52	fixed field losses
10 Voltage dip during start-up	Nil	High because of same I_{st} but for a very short duration as the motor picks up lightly	Nil
11 Fault level	Low	High because of high I_{st}	Low
12 Any cost reduction in electricals (motor, cables, switchgears etc.).	Yes; because of lower capacity of motor, cables and switchgears and a low fault level	Similar cost reduction possible but all requirements to be suitable for slightly higher fault level because of high I_{st}	Yes, as in a.c. drives.
13 Range of speed control	Very wide and stepless up to zero speed	Moderate to accurate, depending upon the accuracy of controls. Stepless up to 20% of N_r at constant h.p. and up to 33% of N_r at constant torque is possible. Pumps, ID fans etc., that call for speed variation during a process need may not necessarily be too accurate. Or variation in flow of fluid, gas or temperature etc. not calling for very accurate controls, that such drives find their extensive use. It may be made more accurate, but at higher cost of controls	Very wide and stepless as for a.c. drives
14 Accuracy of speed control	Up to ± 0.01% in open-loop and ± 0.001% in closed-loop control systems	Moderate to precise controls as for a.c. drives possible with the use of microprocessor-based control systems	Very accurate speed controls up to ± 0.01%
15 Monitoring of operating parameters	Very accurate controls through microprocessor-based closed-loop feedback control systems	Moderate to microprocessor-based, fully programmable logic controls and feedback control systems are available, to provide smooth speed controls as good as a.c. drives	Same as for a.c. drives
16 Acceleration and braking	Possible	Possible	Possible
17 Reversal	Possible	Not possible. Although coupling is bidirectional, it can be run in any one direction only	Possible
18 Inching	Possible	Possible	Possible
19 Power loss	No loss except in the form of motor inefficiency at lower speeds	Relatively higher losses because of (i) High starting current (ii) Coupling slip up to 15–16% at two thirds the input speed and about 20% at 20% of the input speed (slip reduces at lower speeds as illustrated in Figure 6.52	Losses are high because of field system, but comparatively much less than fluid and eddy current couplings. At lower speeds the losses rise in the form of motor inefficiency
20 Energy saving	Optimum saving up to 100% (no loss)	Good saving. But low compared to a.c. drives because of high slip losses. As it saves energy, it is also entitled to state subsidies	Slightly low, 90–94%, because of field losses (up to 5–7%)

Features	*A.C. drive*	*Variable Speed fluid coupling*	*D.C. drive*
21 Harmonics	They generate high harmonics $nk \pm 1$ (Section 23.6(b)) and must be suppressed by using filter circuits	There arises no such phenomenon	Higher than even a.c. drives, because of commutator arcing which it produces at high frequencies
22 Unfriendly environmental conditions such as dustladen areas, fire hazardous, corrosive and contaminated locations	Not suitable. The static controls must be located away from such areas in well-protected rooms	No problems as it is a sealed unit. But for controls which may be located separately	Not suitable at all, as the motor itself cannot be relocated in safer areas
23 Heating	(i) Moderate in transistor controls but (ii) Excessive in thyristor controls. The higher the rating the higher the temperature rise. They require extensive cooling arrangements which may be external or forced	Very high at lower speeds and requires extensive cooling	Moderate
24 Maintenance and downtime	May be high. For efficient maintenance high-skilled operators and their proper training are essential, besides stocking enough spares as recommended by the manufacturer. Yet the expert services of the manufacturer may sometimes be necessary. At times, the spares may not be readily available or it may not be possible to repair them immediately. In such cases either it is a total shutdown or the controls have to be bypassed and the machine run on DOL	Very low maintenance. Where a mechanical ruggedness is required, a fluid coupling provides a more reliable solution	Downtime due to brushes is about 1 hour only in 6 months' to a year's time. However, meticulous monitoring of brushes and commutator condition is important and so also the environmental conditions. Controls will also need similar attention as for a.c. drives. In a breakdown, the motor cannot be run in any way (unlike a.c. motors) and would lead to a total shutdown
25 Cost consideration	A costly arrangement	It is generally cheaper than a static drive in all ranges	Quite economical compared to an a.c. drive. The following may give a rough idea: Up to 10 kW – price difference not significant Above 10–40 kW– a.c controls may be costlier by 30–40% Above 40–130 kW – a.c. controls may be costlier by 40–50% In the range of 500 kW and above – a.c. controls may be costlier by 2.5 to 3 times and even more in still higher ranges

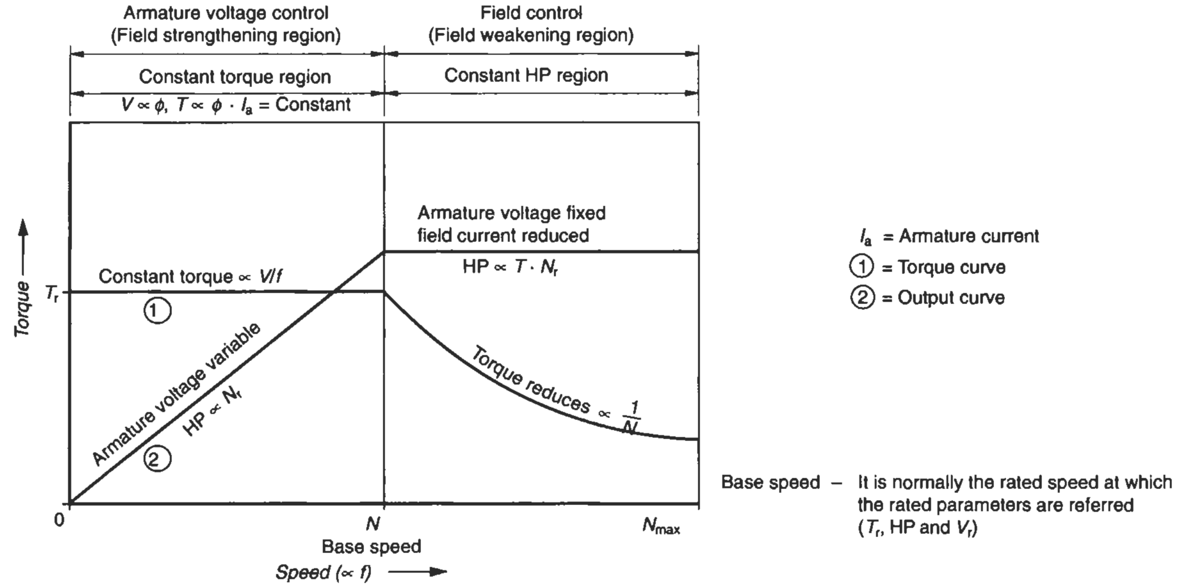

Figure 6.51 Variation of torque with speed in a d.c. machine (the same as for an a.c. machine)

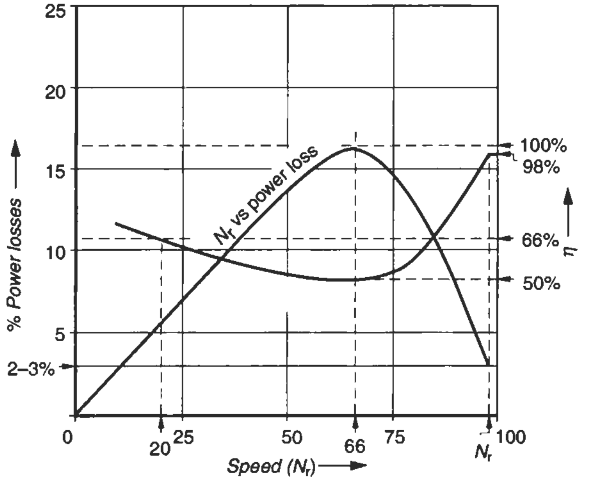

Figure 6.52 An approximate illustration of η and loss variation, with change in speed in a variable-speed fluid coupling

An analogue to starting heat (equation (2.10)) gives the braking heat H_b as

$$H_b = \frac{GD_T^2}{730} \cdot (N_r^2 - N_{r1}^2) \text{ watt-seconds (W.s)} \qquad (6.9)$$

The wider the speed range of braking, the greater will be the heat generated.

6.20.1 Types of braking

There are several methods of braking, external or internal, and they are briefly discussed below. Any of them can be employed, depending upon the torque requirement, i.e. size of motor, its speed, the type of load, etc.

A. *External: mechanical or friction braking*

This type of braking is suitable for small motors and can be achieved through

1 Solenoid-operated brakes,
2 Electro-magnetically operated brakes, or
3 Magnetic particle brakes.

In the first two types a brake shoe, operated by an external auxiliary supply, is mounted on the extended shaft at the NDE (non-driving end) of the motor. These brakes are normally operated after the motor is switched OFF. The heat of braking appears in the external circuit and the motor windings are not affected. For motors with this braking, only the starting heat need be considered, depending upon the frequency of starts and not the heat of braking.

Note Friction braking may be employed for all sizes of drives, either as the only braking means as noted below, or as a supplementary safety means to keep the drive locked stationary when required.

1 AC solenoid brakes These are employed for small motors, say, up to 15–20 h.p. They are suitable for applications such as conveyors, hoists, cranes, machine tools, lock gates and dumb waiters (Figure 6.53). The brakes are spring loaded and mounted on two mechanically opposing brake shoes. They grip a brake drum or disk, coupled rigidly at the NDE of the motor shaft. The brakes are applied mechanically and released electrically. The braking action takes place by de-energizing the spring. The brakes are normally applied in the OFF position for reasons of safety in the event of a power failure. They are released only when the solenoid is energized.

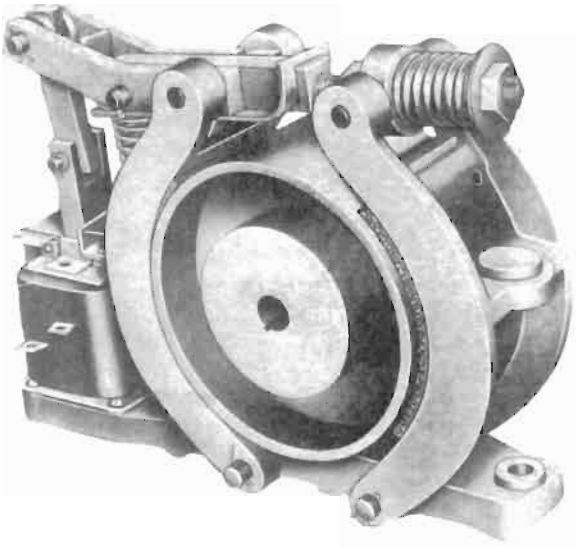

Figure 6.53 AC solenoid brake (Courtesy: BCM)

2 *Electromagnetic shoe-brakes* These are similar to the above, but are used for still higher motor ratings, say, 5–800 h.p. (Figure 6.54). In this case instead of a solenoid coil, an electromagnetic coil is employed. This releases the brakes and develops a torque at least equal to the motor torque, to brake or hold the full load. In this case also, the brakes are applied on the motor shaft when the holding coil (electromagnet) is de-energized and is released only when the electromagnet is energized to make it safe against failure. Possible applications include cranes, hoists, elevators, conveyors, machine tools, rolling mills and ball mills, etc. and also holding of loads in conveyors, hoists and elevators, etc.

Note

1 In both the above types of braking systems, a hand-operated device is also provided, to release the mechanical brakes in applications such as lifts, elevators, cranes, and winders. This lowers the load to the ground loading station or the desired platform, as the situation may require in the event of a power failure.

2 The ratings of the brakes noted above are only indicative.

3 The braking torque of the shoe brakes may diminish with the number of operations. The heat of braking wears out the brake linings. The extent of fading will depend upon the braking torque to decelerate the heavy loads and frequency of its operations. They may also need replacement of the brake linings, similar to an automotive vehicle.

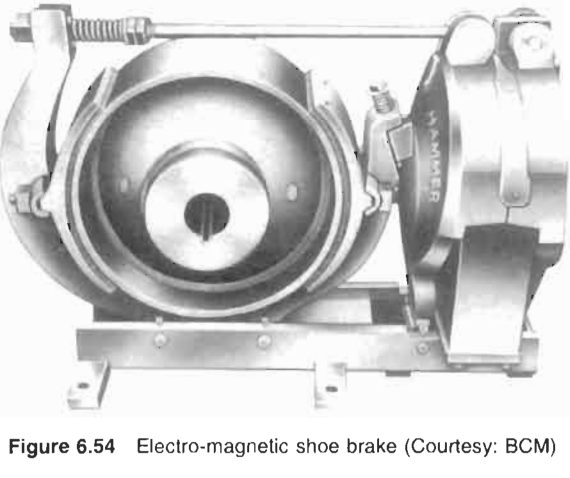

Figure 6.54 Electro-magnetic shoe brake (Courtesy: BCM)

3 *Magnetic particle brakes* One type of these brakes is illustrated in Figures 6.55(a) and (b). They are also known as powder brakes and have a main body (stator) that houses a drive cylinder, forming the main rotating part of the brake. Through its extended shaft is coupled the main drive that requires the braking facilities. Within and concentric to the drive cylinder is a rotor rigidly fixed with the housing. There is a space between the drive cylinder and the rotor, which is filled with small granules of steel in the form of powder, with excellent magnetic properties. This powder, when magnetized, condenses into a solid mass between the

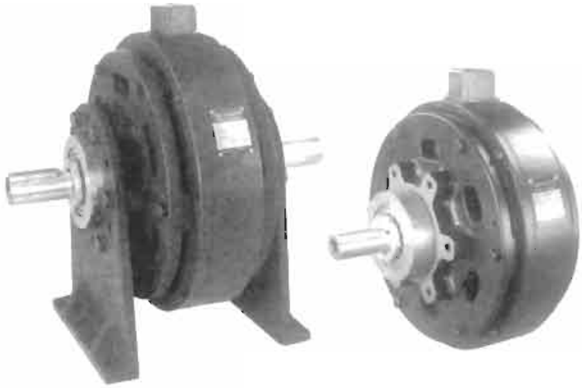

Figure 6.55(a) A magnetic particle brake (Courtesy: Dynaspede)

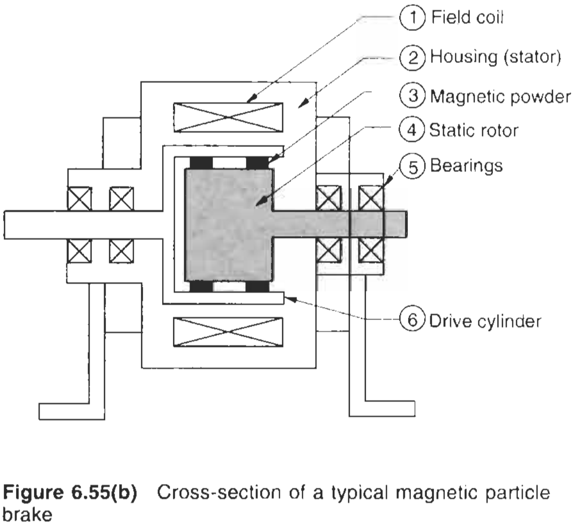

Figure 6.55(b) Cross-section of a typical magnetic particle brake

drive cylinder and the rotor and provides the required braking effect. This is possible with the help of a magnetic field which is provided through a stationary magnetic coil placed in the main housing outside the periphery of the drive cylinder as shown. The field strength of this coil can be varied with the help of a variable current source to obtain a variable braking torque and thus achieve more precise braking control, even remotely. Depending upon the type of application and accuracy of the speed control desired, extremely precise and accurate electronic controls are available. These can infinitely vary the torque and hence the speed of the motor. Such braking devices are available in the range 0.1 kW–60 kW.

Strength of brakes

The brakes should be suitable to counter at least the torque developed by the motor. They must therefore develop at least this amount of torque. To find the least braking torque, the brake drums must be able to develop, in either of the above types of mechanical brakes, the torque shown in equation (1.10) may be used i.e.

$$T_r = \frac{P_r \cdot 974}{N_r} \text{ mkg}$$

The brakes must develop at least this amount of torque or slightly more, i.e.

$$T_b \geq \frac{P_r \cdot 974}{N_r} \text{ mkg} \qquad (6.10)$$

where T_b is the torque of braking

B. *Internal type*

1 *Electrodynamic or d.c. electrical braking* When a d.c. voltage is applied to the motor windings, a steady flux is produced since $f = 0$. The theoretical synchronous speed of the motor, N_s, now reduces to zero. When this steady flux is cut by the rotor conductors, as the rotor is rotating, it induces a steady (d.c.) e.m.f. in the rotor circuit, which produces the required braking effect. In slip-ring motors, the braking torque can be controlled by inserting suitable resistance in the rotor circuit and varying the excitation voltage (Figure 6.57), keeping the excitation current the same. Braking in slip-ring motors by this method is more accurate and simple. Some typical braking curves are shown in Figure 6.56 for a slip-ring motor.

In squirrel cage motors, in the absence of external resistance, the stator windings can be arranged in different configurations such as series, parallel, star or delta, as shown in Figure 6.57, to achieve the varying effects of excitation voltage. This type of braking is useful for both squirrel cage and slip ring motors, but is rarely used.

For applying the brakes, the stator is disconnected from the supply and a d.c. excitation voltage is applied to the windings as shown in Figure 6.57. The windings can be arranged in any configuration, as illustrated, to obtain the required braking torque. If the ampere turns during braking are maintained as during normal running,

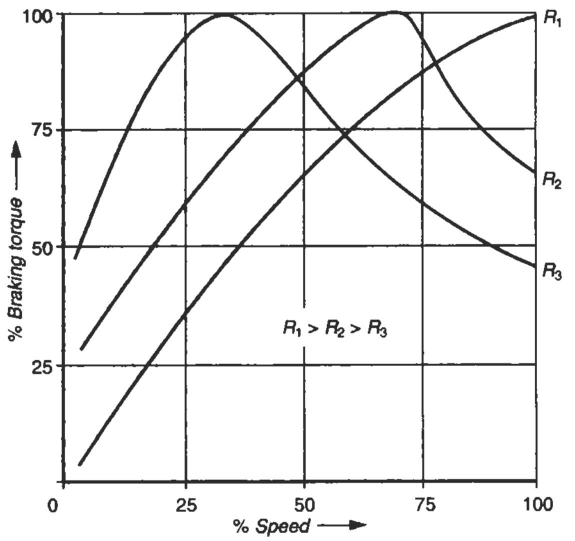

Figure 6.56 Typical braking torque curves for a wound rotor for different external resistances but same excitation current

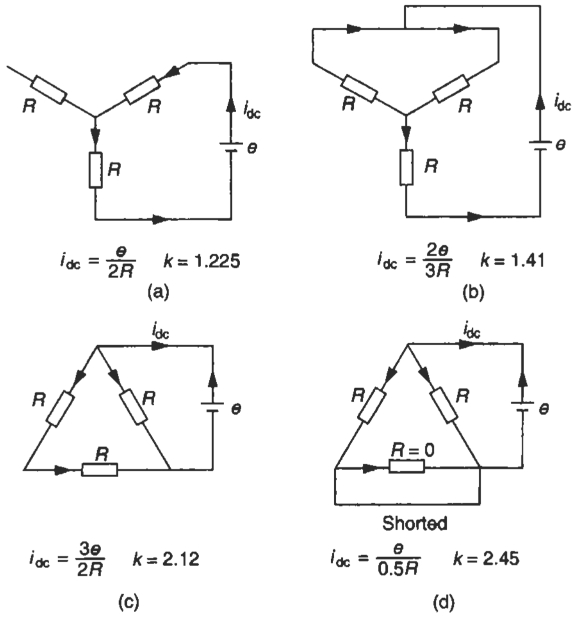

$i_{dc} = \frac{e}{2R}$ $k = 1.225$
(a)

$i_{dc} = \frac{2e}{3R}$ $k = 1.41$
(b)

$i_{dc} = \frac{3e}{2R}$ $k = 2.12$
(c)

$i_{dc} = \frac{e}{0.5R}$ $k = 2.45$
(d)

e = Excitation voltage
i_{dc} = Excitation or braking current
R = Stator resistance per phase. For slip-ring motors, external resistance can be added and R varied

Fig.	k_i	Required dc voltage e
a	1.225	$i_{dc} \cdot 2R$
b	1.41	$i_{dc} \cdot \frac{3R}{2}$
c	2.12	$i_{dc} \cdot \frac{2R}{3}$
d	2.45	$i_{dc} \cdot \frac{R}{2}$

Figure 6.57 Stator or rotor connections for d.c. electric braking

the braking torque curve will almost take the shape of the motor's normal speed–torque curve.

If an independent d.c. source is not available a single-phase transformer and a rectifier bridge as shown in Figure 6.58 can also be used to obtain the required d.c. voltage. Although the requirement of d.c. excitation voltage is not high, the rating of the rectifier transformer and the bridge should be commensurate with the braking force required. This braking force would depend upon the size of the motor and the time of braking. If the braking current, i_{dc}, is known, which is a measure of the braking torque necessary to fulfil a particular load duty requirement, the excitation voltage e can be determined for different winding configurations, as indicated in Figure 6.57. The i_{dc} can be determined from the following equation, considering the same ampere turns as for a standard motor:

$$i_{dc} = k_1 \cdot I_{st(ph)} \cdot \sqrt{\frac{T_l + T_b - T_{ex}}{k_2 \cdot T_{st}}} \qquad (6.11)$$

where

i_{dc} = braking current

$I_{st(ph)}$ = phase value of the starting current

$= \frac{I_{st}}{\sqrt{3}}$ (for a delta-connected stator or rotor)

k_1 = factor to determine the equivalent ampere turns for a particular configuration, as indicated in Figure 6.57. To avoid overheating and excessive electromagnetic forces, i_{dc} is normally not allowed to exceed $I_{st(ph)}$

T_ℓ = average load torque between the running speed and the final speed (Figure 6.59)

T_b = average braking torque between the running speed and the final speed (Figure 6.59). This will depend upon the braking duty the motor is required to perform such as the final speed, N_{r1} (which we have considered as zero in Figure 6.59), and the duration within which the motor must brake to this speed from N_r. This can be determined from equation (6.8)

T_{ex} = braking torque of the external brakes, if provided otherwise it may be considered to be zero

T_{st} = locked rotor (starting) torque of the motor

k_2 = a factor to account for the average braking torque. This may be considered to be 1.3–1.7 (consult the manufacturer for a more accurate value)

In addition to electrical braking, a mechanical brake, as discussed in Section 6.20.1(A) may also be essential if the motor is required to be stopped completely because, at any value of excitation current, the motor will never reach a standstill condition. The heat of braking up to the standstill condition (N_{r1}= 0) is roughly equal to one start and is expressed by equation (6.9).

2 *Plugging* By changing any two of the phases the motor will develop a torque in the reverse direction and provide the necessary braking. The voltage across

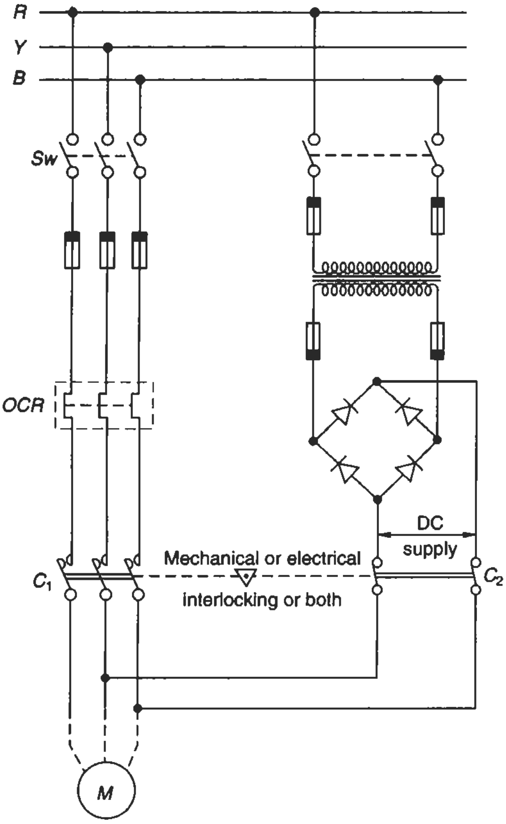

Figure 6.58 Obtaining d.c. voltage through a bridge rectifier

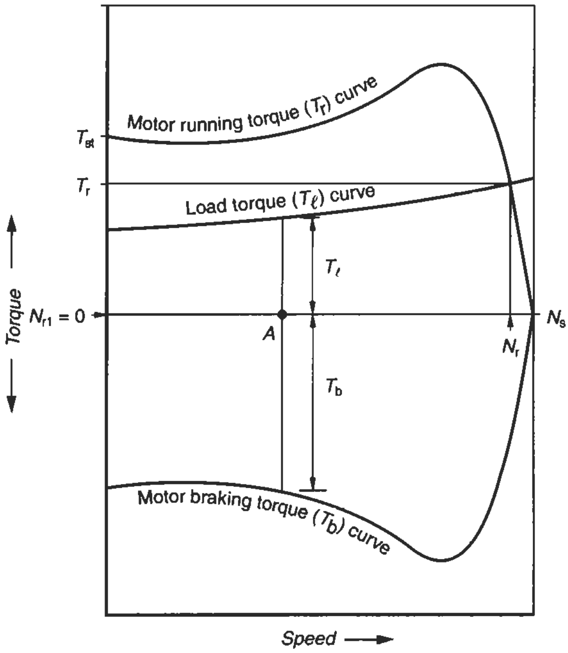

Total braking torque at point A = $T_\ell + T_b$

Figure 6.59 Braking torque during d.c. electric braking the windings at the instant of plugging becomes twice the rated voltage, and slip as $2S$, for the changed magnetic field. With these changed parameters, the current and torque curves can be approximately determined from equations (1.7a) and (1.3a) respectively, for high slip conditions.

Current and voltage will both give a transitory kick at the instant of plugging, depending upon the effective voltage across the windings, under the influence of the motor's self-induced e.m.f. and the applied voltage. The transitory state will last only a few cycles and then the curves will generally take the shape as in the equations noted above and illustrated in Figure 6.60. Generally, except for the initial kick, there will be no significant variation in the current and torque values compared to their starting values at $S = 1$. These values can be varied in slip-ring motors by altering the rotor's circuit resistance. During plug-ging, if the supply is not switched OFF at the instant of reaching the standstill position, the motor will start rotating in the reverse direction, tracing the same speed–torque and speed–current curves as in the forward direction. But a reverse direction may damage the driven load. Precautions are essential to prevent such a situation by providing an electrical interlock-ing and/or a reverse ratchet arrangement in the load coupling.

The windings may, however, be subject up to twice the rated voltage and must be suitable to withstand this voltage repeatedly when necessary. The heat generated during braking will be roughly three times the heat generated during start-up as determined below:

Rotor losses per phase $W = I_{\text{rr}}^2 \cdot R_2$

Rotor torque per phase $T = \dfrac{I_{\text{rr}}^2 \cdot R_2}{S}$

$\therefore$ Rotor loss per unit torque $\dfrac{W}{T} = S$

Average loss between slip S_1 and S_2 $= \dfrac{(S_1 + S_2)}{2} \cdot T$

(i) During a normal running,

when $S_1 = 1$ and $S_2 = 0$

starting heat $\propto$ starting loss $\propto \dfrac{T}{2}$

(ii) During plugging,

when, $S_1 = 2$ and $S_2 = 1$

Heat generated during plugging

$$\propto \frac{(1+2)}{2} T \quad \text{or} \quad \propto \frac{3}{2} T$$

Therefore the heat of the motor during plugging is three times that of during a normal start. Stator heat and thus the total motor heat is a function of the rotor heat (see also Section 2.7.1). Such a method is therefore not suitable for larger motors or for frequent brakings.

Note This is an approximate derivation for a simple illustration of the ratio of heats. The time of start and braking is not considered in the above derivation, whereas both would be different and so will be the heat generated. The time of start would be much higher than the time of braking, as the latter is much higher than the former. Figure 6.60 illustrates this. But in view of the high current during plugging the ratio of heat as noted above is a near approximation.

3 *Regenerative braking* If the motor be run beyond synchronous speed by some external means it will work as a generator and feed back useful energy to the supply system. It will draw only the necessary excitation current, I_m, for the generator action from the source of supply. In such a condition, the motor

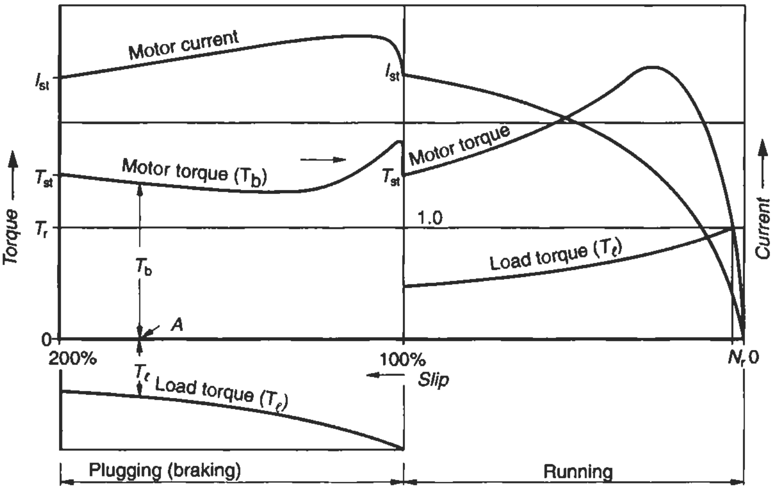

Total braking torque at point $A = T_\ell + T_b$

Figure 6.60 Approximate motor torque and current characteristic curves during plugging will exert a countertorque, the magnitude of which will depend upon the motor speed above synchronous. Such braking conditions may occur automatically in downhill conveyors, lifts and hoists etc. while descending with the load, i.e. operating as an induction motor while ascending and as an induction generator while descending. The generator and the braking action ceases at synchronous speed. For speed control below synchronous speed, therefore, it will be essential to employ a multi-speed motor which, at a higher speed, can be switched to the lower speed winding to make the motor work as a generator between the high and the low speeds. Such a braking method, however, has only limited commercial applications, as in a sugar centrifuge motor (Section 7.4).

With the application of solid-state technology, however, as discussed above, the potential energy of the loads in hoists, lifts and conveyors during descents can be saved and fed back to the source.

6.21 Induction generators

During generator action, the slip, and currents of the stator and the rotor are negative. The motor draws reactive power from the source for its excitation (magnetization) since it is not a self-excited machine. However, it feeds back to the supply system an active power almost equal in magnitude to the motor rating or slightly less or more, depending upon its supersynchronous speed. As an induction generator, it can feed back to the supply source roughly equivalent to its h.p. at the same negative slip, say, 3–5%, as the positive slip, at which it operates under normal conditions and delivers its rated h.p. As a result of the absence of the reactive power, which is now fed by the source and the mechanical losses that are fed by the wind, the power output of an induction generator is usually more than its power consumption when working as a motor (Figure 6.61).

The power factor, however, is poor because of higher negative slip. The power output is expressed in the same way as the motor input, i.e.

$$G_1 = \sqrt{3} \cdot I_G \cdot V \cdot \cos \phi \cdot K \tag{6.12}$$

where

G_1 = generator output at the same negative slip as for the motor. See also Figure 6.61 and the circle diagram of Figure 1.16, redrawn in Figure 6.62 for an induction generator

K = factor to account for the lower p.f. at higher negative slips when working as an induction generator (say, 0.97).

I_G = generator rated current in A.

$\cos \phi$ = generator rated p.f. which is quite high compared to a motor, as the reactive power is now supplied by the external source.

Example 6.4

For a 100 kW, 380 V induction motor operating at an approximate η of 92.2%, having I_r as 185 A and $\cos \phi$ as 0.89, the output as an induction generator will be

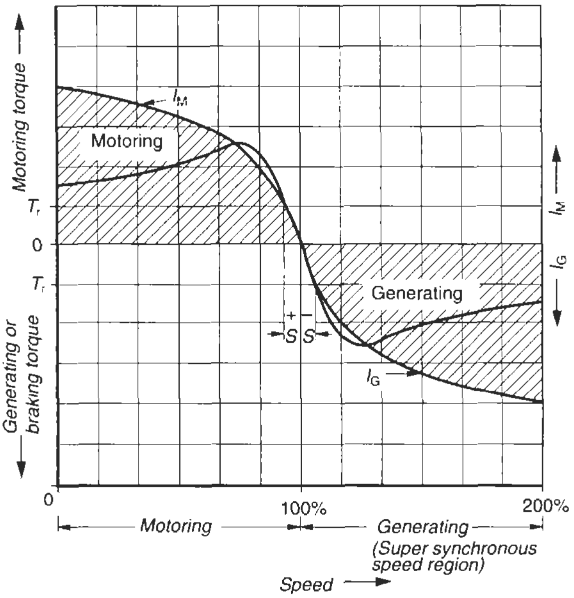

I_M – *Motoring current drawn from the source*

I_G – *Generating or braking current fed to the source*

Figure 6.61 Current, torque and speed characteristics of an induction generator

$$G = \sqrt{3} \times 380 \times 185 \times 0.89 \times 0.97 \text{ W}$$

(considering η as $\simeq$ 100%)

$$= 105 \text{ kW}$$

and the kVAR consumed by the induction generator from the source of supply,

$$\simeq \frac{\sqrt{3} \times 380 \times 185 \times \sqrt{(1^2 - 0.89^2)}}{0.97 \times 1000}$$

$$\simeq 57.24 \text{ kVAr}$$

Corollary

The power output of an induction motor, when operating as an induction generator, is usually more than its output when working as a motor. There are no mechanical or windage losses which are fed by the mechanical power that makes the motor run as a generator, such as the potential energy accumulated during downhill conveying or wind power etc. The power output is approximately equal to the effective power intake except for the lower power factor and resistive (copper) losses, that are ignored above.

The circle diagram (Figure 1.16) reverses in this case and the magnitude of braking torque and corresponding stator and rotor currents can be ascertained at any particular speed from this diagram redrawn in Figure 6.62. A study of this diagram will reveal that for a motor's normal running speed N_r to reach the synchronous speed N_s, the motor will behave as a generator without output (region D_1P_1) and will draw power from the main supply to meet its no-load core losses and friction losses etc. (D_1P_1). This will deliver active power back to the main supply as soon as it exceeds its synchronous speed. The maximum power that can be delivered is measured from the no-load line of the motor to the output line of the generator (D_1P_2) minus the no-load losses (D_1P_1), i.e. the downward hemisphere from the centre line or the generator output line (P_1P_2).

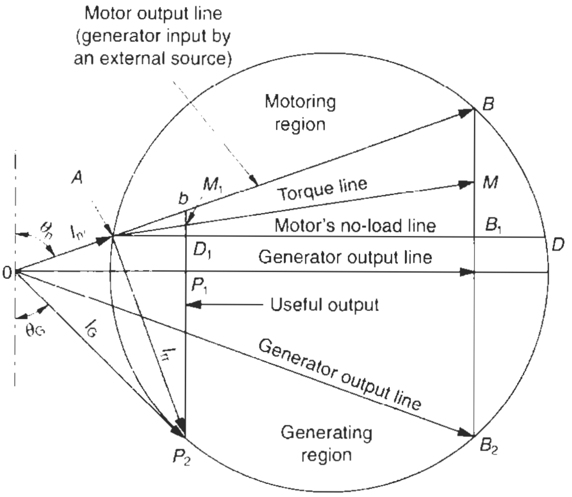

Figure 6.62 Circle diagram for an induction generator

Figure 6.63 shows the generating region and torque and current variation for a dual-speed motor when at higher speed the supply is changed over to the low-speed winding. From the torque curve it is evident that the torque reverses twice in quick succession through two reverse peaks (curve area *abcd*) and the motor must be suitable to withstand this. All the parts, subject to this phenomenon should be carefully designed and selected and rotor bars and end rings should be tightly secured and braced. Precautions against heavy centrifugal forces to which the rotor conductors will be subject at super-synchronous speed should also be taken into account. At a higher speed beyond the synchronous (a higher rated negative slip) the higher will be the stator current and the generator will run overloaded. To safeguard against overloading, relays or similar protections must be provided in the supply lines to disconnect the motor beyond a specific speed (generally beyond the rated negative slip), after a certain time delay, if such a situation arises.

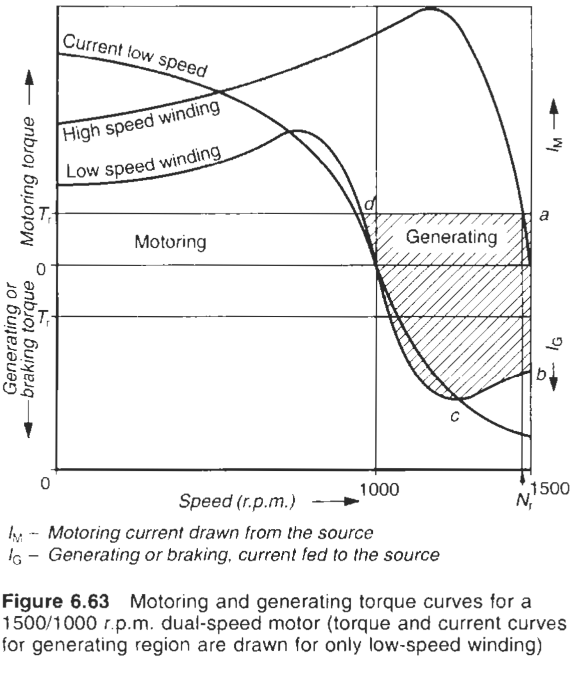

I_M – Motoring current drawn from the source
I_G – Generating or braking, current fed to the source

Figure 6.63 Motoring and generating torque curves for a 1500/1000 r.p.m. dual-speed motor (torque and current curves for generating region are drawn for only low-speed winding)

In downhill conveyors, running mostly on stored potential energy by gravity, the motor may overspeed beyond excessive limits unless prevented by a brake or a tachogenerator relay.

Critical speed

At certain speeds, rotating masses become dynamically unstable and cause deflection and vibration in the rotor which may damage the motor. The speed at which such instability occurs is known as critical speed and occurs at different multiples of the rated speed. The masses must therefore rotate within 20% below or above the critical speeds to avoid such a situation. These vibrations settle down again at higher speeds above critical and recur at the next higher critical speed.

To achieve a vibration level of 0 micron in a rotating mass is practically impossible. It will possess some run-out, however precisely and accurately it has been balanced. While rotating, therefore, the shaft on which the other masses rotate, will deflect to the side which is heavier and the opacity around the centre of the shaft will become uneven. The masses will rotate in small circles about their own geometrical axis rather than the axis of the shaft.

In a motor the first critical speed is several times higher than the operating speed and may not reach in operation. In downhill conveyors, without any mechanical speed control, such speeds may be reached when the motor overspeeds while descending. When so, the motor should be disconnected from the supply lines, otherwise there will be excessive overloading. There may be several critical speeds in a rotating mass which tend to become infinite with the number of loads on the same shaft. But the first critical speed alone is of significance, as other critical speeds much higher than even the first critical speed are of no relevance. No rotating mass may possibly reach this during operation in an induction motor.

Induction generator as a wind-powered generator

The main application of this machine is found in non-conventional energy generation, such as for wind power, gas turbines and mini- or microhydro power generation etc. They are used extensively to convert wind power into electrical power. The wind power is first converted into rotating kinetic energy by aerodynamically designed blades. This energy is then converted into electrical energy through these machines. They are thus known as wind electricity generators (WEG). Presently such machines are in use from 50 kW to 6 MW worldwide. In India they are in use for up to 1 MW (mostly in the range 400–600 kW). Potential locations for such machines are coastal areas, where there are high and continuous winds. In India examples of these locations are in the states of Maharashtra, Kerala, Tamil Nadu, Karnataka and Gujarat.

The electricity generated depends primarily on the speed of the wind at the site of installation. A conventional formula to determine the wind energy, based on the design of the rotor (rotating blades) and the site conditions is given by

$$P = 0.5 \cdot C_p \cdot A \cdot \rho \cdot V^{3*} \qquad (6.13)$$

where

P = power generated by the turbine (windmill) in watts

C_p = coefficient of performance which depends upon the aerodynamic efficiency of the rotor and varies with the number of blades and their profile. This factor is provided by the mill supplier and generally varies between 0.35 and 0.45

A = swept area of the rotor in m^2

$$= \frac{\pi D^2}{4}$$

where

D = diameter of the rotor (blades) in m

ρ = air density = 1.225 kg/cm^3

V = velocity of wind at the site of installation, at the height of the hub in m/s

* The ideal condition would be when the rotor output is a cubic function of wind speed. But in practice this may not be so. It is found to be linear or a near quadratic (square) function of the wind speed, as shown in Figure 6.64

Typical specification for a KEC (India) 400 kW machine is provided below for a general reference:

Cut-in speed = 4.5 m/s

Approximate output at the cut-in speed from the manufacturer's data (Figure 6.64) = 8 kW

Rated wind speed = 11.5 m/s

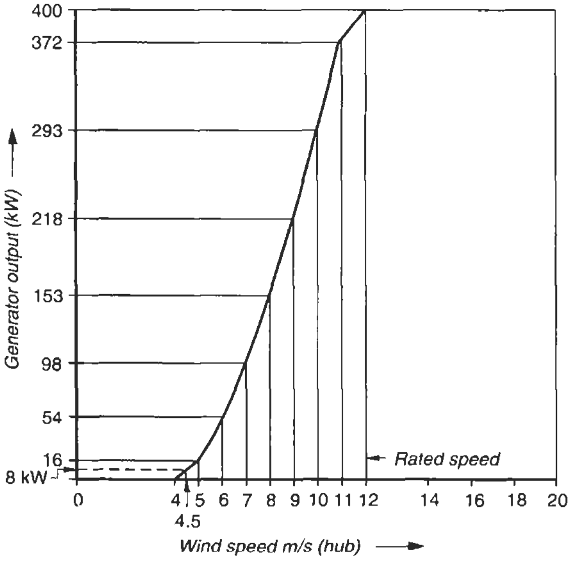

Figure 6.64 Typical power curve for an induction generator of 400 kW at 11.5 m/s wind speed

Mean wind speed = 25 kmph

$$= \frac{25 \times 1000}{60 \times 60} \text{ m/s}$$

$$= 6.94 \text{ m/s}$$

Note Generally, the ratio of rated to mean wind speed may be quite high due to long lean periods, when the machine may stay idle, reducing the value of the mean speed.

Shutdown speed = 20 m/s

Rotor diameter including hub = 39.35 m

Rotational speed of the rotor at the rated wind speed = 38 r.p.m.

Example 6.5

For the above machine the wind power considering the C_p as 0.35 will be:

$$P = 0.5 \times 0.35 \times 1.225 \times \pi \times \frac{39.35^2}{4} \times 11.5^3$$

$$= 396.3 \text{ kW}$$

Below we give a brief idea of the mechanical system of such a mill and its various controls, as a passing reference. For more details on the subject, see the Further reading at the end of the chapter.

Mechanical system

See Figure 6.65, illustrating the general arrangement of a windmill.

1. *Tower* This may be tubular or lattice type to mount the mill's mechanism. The structural design is based on the cutout wind speed.
2. *Nacelle* This is the main housing of the mill, made of metal or FRP and contains a rotating hub on which is mounted the blades. Inside the housing is a gearbox, one end of which is coupled to the rotating blades and the other to the generator. For optimum efficiency of the mill, it is essential that the blades fall perpendicular to the direction of the wind. To accomplish this, the nacelle is made to rotate at the top of the tower. It aligns to the required direction through a yawing mechanism which adjusts the rotor assembly so that when the blades are in motion they fall perpendicular to the wind direction and, when at rest, at low and high cut-out speeds, they fall in line with the wind direction for minimum stress.
3. *Blades* These are made of wood and epoxy compound composite material or fibre glass. Their mechanical strength is also commensurate with the cut-out wind speed. These blades are connected to a rotating shaft coupled to the generator through a gear assembly. They may also be fitted with an additional feature of a pitch control mechanism through a servomotor or a hydraulic system. Such a system can rotate the blades around their own axis to adjust their angular speed with the speed of the wind. This feature assists the gear system to provide a near-constant speed to the rotating shaft. It also helps in

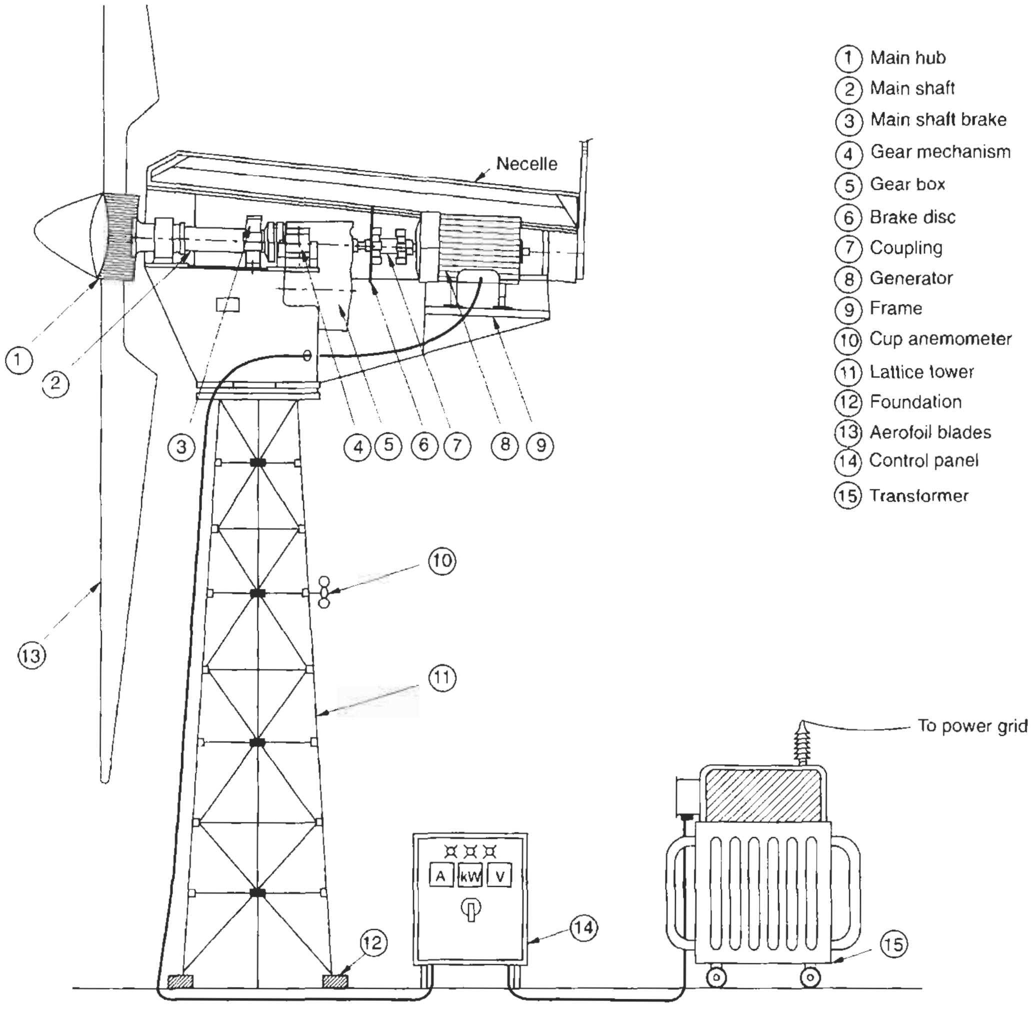

Figure 6.65 General arrangement of a windmill

'slipping' the excess power of wind to some extent, to optimize the operation and running hours of the machine during excessive wind speeds exceeding the cut-out speed. This feature also protects the machine from excessive wind pressure (for example, during storms).

4. *Yaw* This is a mechanism that helps the nacelle to move in the right direction with the help of a yawing motor or a hydraulic system. In this case the hydraulic system provides a smoother movement.
5. *Hydraulic power supply* This actuates brakes and also feeds the yawing and pitch control (if they are also hydraulically operated).
6. *Brakes* These block the rotor at the cut-in and cut-out speeds and also during maintenance:
   - Cut-in wind speed is the minimum wind speed at which the generator commences the generation of power. At this speed the brakes release and the prime mover (blades) starts rotating.
   - Cut-out wind speed is the maximum wind speed beyond which the prime mover may overspeed above its permissible limits. As the structure and the blades are designed for a particular maximum speed, a wind speed higher than this may exceed their mechanical endurance and become unsafe. At this speed the brakes apply and the machine is disconnected from the grid. The cut-in and cut-out speeds define the wind speed limits within which the turbine will work safely through the generator.
   - Rated wind speed is the speed at which the prime mover rotates at the rated negative slip and generates the rated power.

Note To avoid unnecessary wear and tear of the machine, the blades are braked when the machine is not in operation. In fact the main protection to the machine is through the brakes only. During an overloading or system fault condition the blades are braked and the machine ceases to generate. The control panel monitors closely all the operating parameters and sends out warning signals or stops the machine when operating conditions exceed the permissible limits.

7 *Gear system* Since the wind speed is never the same, and the rotor is never permitted to rotate at a higher speed than its designed parameters, a gear system is provided between the blades and the generator rotor to protect it from excessive wear and tear. The gear system helps the generator rotor to run at the generator's rated speed. The normal gear ratio to boost the speed of the prime mover to the generator speed is from roughly 30–40 r.p.m. to a little over the synchronous speed of the induction generator. The gear system is a two- or three-stage fixed ratio gearbox giving fixed output speeds. Fine adjustment is achieved through pitch control of the blades.

8 *Sensors*

- Anemometer – to monitor wind speed
- Temperature sensors – to monitor the operating temperature of the gearbox, generator windings and other important parts of the machinery
- Wind vane – to monitor wind direction
- Vibration sensors – to monitor correct alignment, loose or worn-out parts etc.
- Pressure sensors – for the hydraulic system that actuates the yawing mechanism, brakes and pitch of the blades

9 *Electrical system*

- Main power panel to receive power from the generator and feed this back to the power grid
- Step-up transformer if the voltage of the generator is different from that of the grid
- Related switchgears
- Control and relay panel (which may be microprocessor based), to record, display, monitor and control the generated power, voltage and frequency and also detect fault conditions.
- Frequency inverters to regulate the voltage and frequency etc.

10 *Induction generator* This is a standard squirrel cage motor with additional treatment to weather the site conditions. The normal specifications are generally the same as for a standard motor. The permissible voltage and frequency variations are, however, wider as noted below:

Voltage ±13%

Frequency –3% + 3%

or as may be required to suit a particular grid system. A frequency limit of +3% signifies that the machine should not overspeed beyond 101.5% of its synchronous speed. This is to avoid overloading of the machine as well as retaining synchronism with the grid. For better use the machines are often wound for a dual speed, such as 4/6 pole, so that when the wind speed falls below the minimum cut-in speed, the lower speed windings take over and the generator may still operate and feed back to the power grid at a slightly lower output (in the ratio of motor outputs at the two speeds). To achieve this, two switching circuits may be provided, one for each speed as shown in Figure 13.59 (Table 6.1).

The changeover is obtained by measuring the average power generated during a particular time period, say, one minute or so, rather than the speed of the wind. When this average power falls below a preset level the machine changes over to the lower speed windings and vice versa. Due to the unpredictable nature of the wind speeds, this may require frequent changeovers and may affect the reliability of a double-speed system.

As soon as the wind speed reaches the minimum required speed (cut-in speed), i.e. a lower speed mode, in dual-speed machines the brakes release and the prime mover picks up speed. At about 95% of the rated speed of the machine, the stator of the induction generator is supplied with the necessary reactive power from the grid through an inverter, to generate the required magnetic field. At this speed, which is almost the rated speed of the motor, the machine draws just enough reactive power from the grid to meet its magnetizing requirements and a small amount of mechanical power from the wind power to meet its friction and windage losses (area D_1P_1 of Figure 6.62). The magnetizing current is now much less than the no-load losses of the machine when it operates as a motor. The inverter is normally thyristor controlled to provide the machine with a soft start and to control the starting current to almost the rated current in case of excessive machine speed. It also avoids an excessive voltage dip at the generator terminals and time to hook up to the grid. As soon as the machine exceeds its synchronous speed, it starts generating and feeding the active power back to the grid, similar to the output curve of the machine in Figure 6.64. (The curve is provided by the machine supplier.) The generator, when hooked up to the grid, will follow the grid voltage and frequency. The generator is regulated not to overspeed beyond 101% of its synchronous speed. Small speed variations are carried out through pitch control to optimize the power output and running hours of the machine. The power generated is proportional to the negative slip at which the machine operates (area P_1P_2 of Figure 6.62).

The total reactive power that it draws from the grid

$$VAr = \sqrt{3} \cdot V_r \cdot I_m \text{ watts}$$

where

V_r = rated voltage of the machine in volts, and
I_m = magnetizing current of the machine in amps. (Figure 1.15)

Use of capacitors

Power capacitors are installed to compensate for the reactive power, particularly that which the machine draws from the grid. The capacitors must be suitable for a minimum voltage of V_r + 13% (generally V_r + 15%).

Active power

The power the machine feeds back to the grid is expressed by equation (6.12) discussed earlier.

Note A normal motor is designed for a slightly lower voltage than the system voltage to account for cable drops from the source of supply up to the motor. But as an induction generator, it is designed for a slightly higher voltage than the grid voltage or the primary voltage of the transformer (when a transformer is installed to raise the voltage of the wind generator to the grid voltage) to account for the voltage drop from the generator to the grid or transformer.

Micro siting

To identify the correct location and size of a mill it is essential to ensure that there is adequate wind at high speeds at the site. The process of identifying the most appropriate locations is termed micro siting. Local government and private agencies conduct surveys and compile wind data for potential areas for these mills. A list of these agencies in India is provided at the end of the chapter. These mills are generally installed away from areas of habitation for maximum wind and safety for people and animals or in remote areas not connected with power lines. The power so generated may be captive to supply nearby areas or fedback to a power grid to augment its capacity. In remote areas where no power grid exists the power so generated may also be stored in batteries through a voltage source inverter and utilized when required. Such a system, however, is more convenient for small mills, say, up to 5 kW, otherwise the cost factor may act as a deterrent to such an arrangement.

Normally such mills are installed in groups known as wind farms to provide a sizeable power source, except in remote areas, where power demand may be restricted to a very limited area and small mills may suffice. When mills are installed in groups, precautions are necessary to ensure that there is enough distance between any two mills so that there is no hindrance to routine maintenance, on the one hand, and obstruction of wind to other mills, on the other. For more details, refer to the literature available on the subject in the Further reading at the end of the chapter.

6.22 Inching or jogging

This means repeated short-duration application of power to the motor to cause small movements of the shaft from rest to perform certain load requirements. The motor may normally not reach its full speed, nor at times complete even one full revolution, and can be rotated in either direction. Likely applications may relate to lifting or hoisting which may call for delicate handling and a rather slow, smooth and more accurate final movement for exact positioning, lifting or unloading etc.

This is a severe duty for the switching contactors as they have to endure repeated arcing of the interrupting contacts every time they make or break. (Select only AC–4 duty contactors: see Section 12.10.)

6.23 Number of starts and stops

Due to excessive starting and braking heat losses it is not advisable to switch an induction motor ON and OFF frequently. The number of starts and stops a motor is capable of performing will depend upon its working conditions such as type of switching, braking and load demand etc. and can be determined from

$$Z_L = Z_{NL} \cdot \frac{K_b}{F_I} \cdot K_L \tag{6.14}$$

where

Z_L = number of starts and equivalent stops per hour on load. For example, in plugging one start and one stop will mean four starts and if reversal is also involved then five starts.

Z_{NL} = permissible number of starts per hour for a motor with a free shaft, using mechanical braking, thus placing no strain on the motor. This factor will depend upon the electrical and mechanical design of a motor and will vary from one manufacturer to another. The cooling capacity, its effectiveness, i.e. heating and cooling characteristics and starting torque of a motor, are the parameters that would determine this factor. The smaller the motor, the greater number of starts it will be capable of performing. For a lower-speed motor, the average starting torque will be normally less and the inertia more. Therefore the permissible number of switching operations will be comparatively less for a low-speed motor than for a high-speed motor of similar rating. As a rough guide, small motors, say, up to 20 h.p., may have a factor as high as 1000–2000.

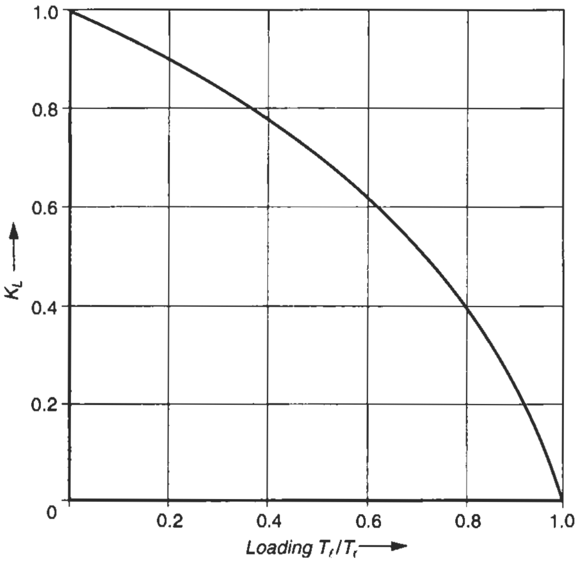

Figure 6.66 Average load factor K_L when started against load

K_b = factor of braking, which depends upon the type of braking used, such as
(a) Mechanical braking $K_b = 1$
(b) D.C. braking $K_b = 0.6–0.5$
(c) Plugging $K_b = 0.3–0.4$
(d) Regenerative braking $K_b = 0.4–0.5$

K_L = mean load factor, i.e. the ratio of the average load torque to the motor torque which depends upon the loading on the motor during start-up. For most applications (e.g. cranes, lifts or machine tools) this factor is based on a loading of 0.5 or 0.75. This factor is also determined by the manufacturer and may have a shape as shown in Figure 6.66:

$$FI = \frac{GD_M^2 + GD_L^2}{GD_M^2} \tag{3.1}$$

Relevant Standards

IEC	*Title*	*IS*	*BS*
60034-1/1996	Rotating electrical machines Rating and performance	4722/1992 325/1996	BSEN 60034–1/1995
60034-17/1998	Cage Induction motors when fed from converters Application guide		
60146-1-1/1991	Specifications of basic requirements for power converters	14256/1995	BSEN: 60146-1-/1993
60439-1/1992	Low voltage switchgear and controlgear assemblies. Type tested and partially type tested assemblies	8623 (Part-1) 1993	BS EN : 60439 1/1994
	Code of practice for selection, installation and maintenance of switchgear and controlgear: Part 3 Installation	10118 (Part-III) 1982	–

Related US Standards. ANSI/NEMA and IEEE

ANSI/IEEE-C62.41-1991	Recommended practice for surge voltages in low voltage a.c. power circuits
ANSI/IEEE C-37.21/1998	Standard for control switchboards
ANSI/IEEE-519/1993	Guide for harmonic control and reactive compensation of static power converters
NEMA/MG-7/1993	Motion/position control motors and cables
NEMA/ICS-1.1/1988	Safety guidelines for the application, installation and maintenance of solid state control
NEMA/ICS-7/1993	Industrial control and systems. Adjustable speed drives
NEMA/ICS7.1/1995	Safety standards for construction and guide for selection, installation and operation of adjustable speed drive systems
NEMA/ICS-9/1993	Industrial control and systems. Power circuit accessories (requirement for brakes)
NEMA/LS-1/1992	Low voltage surge protection devices

Notes

1 In the tables of relevant Standards in this book while the latest editions of the standards are provided, it is possible that revised editions have become available. With the advances of technology and/or its application, the updating of standards is a continuous process by different standards organizations. It is therefore advisable that for more authentic references, readers should consult the relevant organizations for the latest version of a standard.

2 Some of the BS or IS standards mentioned against IEC may not be identical.

3 The year noted against each standard may also refer to the year of its last amendment and not necessarily the year of publication.

List of formulae used

Speed control through phasor control

$$\bar{I}_l = \bar{I}'_m + \bar{I}_m + \bar{I}_a \qquad (6.1)$$

I_l = line current
I'_m = loss component
I_m = magnetizing component
I_a = active component

Field-oriented control

$$T = k \cdot I_m \cdot I_a \sin \theta \qquad (6.2)$$

θ = phasor displacement between $\bar{I}_m$ and $\bar{I}_a$ (electrical position of rotor field in space with respect to stator)

To obtain variable *V* and *f* in IGBTs through PWM

$$CDF = \frac{t_1 + t_2 + t_3 + t_4 + t_5 + t_6}{T} \qquad (6.3)$$

$t_1, t_2 \ldots t_6$ are the pulse widths in one half cycle
T = one half of a cycle

or $V_{r.m.s} = V\sqrt{CDF}$ (6.4)

V = amplitude of output, voltage pulses
$V_{r.m.s}$ = r.m.s. value of the output, a.c. voltage

To smooth output a.c. ripples

$$Q = C \frac{dv}{dt} \qquad (6.5)$$

Q = charge stored by the capacitor unit
C = capacitance of the capacitor
dv/dt = rate of voltage change or a.c. ripples in the d.c. link

Current source inverter (CSI) to vary I_1 and *f*

$$V \simeq L \frac{di}{dt} \text{ (ignoring } R \text{ of the circuit)} \qquad (6.6)$$

V = voltage across the inductor
L = large series inductor
$\frac{di}{dt}$ = a.c. ripples

Computation of energy saving in a pump

$$P = \frac{H_d \cdot Q \cdot d}{36 \cdot \eta} \qquad (6.7)$$

P = shaft input in kW
H_d = head in bar
Q = discharge in m^3/hour
d = specific gravity of the liquid in g/cm^3
η = efficiency of the pump

Braking time

$$t_b = \frac{GD_T^2 \cdot N}{375 \cdot T_b} \text{ seconds(s)} \qquad (6.8)$$

$N = N_r - N_{r1}$ (i.e. speed reduction in r.p.m.)
T_b = braking torque in mkg

Braking heat

$$H_b = \frac{GD_T^2}{730} \cdot (N_r^2 - N_{r1}^2) \text{ W.s} \qquad (6.9)$$

Minimum braking torque

$$T_b \geq \frac{P_r \cdot 974}{N_r} \text{ mkg} \qquad (6.10)$$

Electrodynamic or d.c. electric braking

$$i_{dc} = k_1 \cdot I_{st(ph)} \cdot \sqrt{\frac{T_l + T_b - T_{ex}}{k_2 \cdot T_{st}}} \qquad (6.11)$$

i_{dc} = braking current
$I_{st(ph)}$ = phase value of the starting current
= $I_{st}/\sqrt{3}$
k_1 = factor to determine the equivalent ampere turns for a particular configuration
T_l = average load torque between running speed and the final speed
T_b = average braking torque between running speed and the final speed
T_{ex} = braking torque of the external brakes, if provided; otherwise this may be considered as zero
T_{st} = starting torque of the motor
k_2 = a factor to account for the average braking torque

Induction generator power output

$$G_l = \sqrt{3} \cdot I_G \cdot V \cdot \cos\phi \cdot K \qquad (6.12)$$

G_l = generator output at the same negative slip as for the motor
K = factor to account for the lower p.f. at higher negative slips, when working as an induction generator
I_G = generator rated current in A
$\cos \phi$ = generator rated p.f.

Wind energy

$$P = 0.5 \cdot C_p \cdot A \cdot \rho \cdot V^3 \qquad (6.13)$$

P = power generated by the windmill in watts
C_p = coefficient of performance
A = swept area of the rotor in m^2
D = diameter of the rotor (blades) in m
ρ = air density = 1.225 kg/m^3
V = velocity of wind at the site of installation, at the height of hub in m/s

Number of starts and stops

$$Z_L = Z_{NL} \cdot \frac{K_b}{FI} \cdot K_L \qquad (6.14)$$

Z_L = number of starts and equivalent stops per hour on load
Z_{NL} = permissible number of starts per hour with free shaft
K_b = factor of braking
K_L = mean load factor

Further reading

1 *ABC of Drives,* Siemens Catalogue DA 662 (1993).
2 Berde, M.S., *Thyristor Engineering*, Khanna Publishers, India (1900).
3 Blascke, F., 'The principle of the field oriented transvertor as applied to the new closed loop control system for rotating field machines', *Siemens Review* **34**, 217–220 (1972).
4 Humphries, J.T., *Electronic AC Motors and Controls*, Merrill Publishing, Columbia, OH. (19••).
5 Indo-British Workshop on Power Electronics, Energy Saving Machine Control and Simulation Vol. I and II, 14–18 December 1992. Organized by IIT, Delhi, India.
6 Leonard; W., '30 years space vectors, 20 years field orientation and 10 years digital signal processing with controlled a.c. drives', *EPE Journal,* **1** No. 1, July (1991) and **1**, No. 2, Oct. (1991).
7 Microprocessor Application Programme. Department of Electrical Engineering, Indian Institute of Technology, Delhi, India.
8 Nath, R., 'Saving energy with variable speed drives', *Siemens Circuit,* **XXII**, Oct. (1987).
9 Publication 1204-1.0, March 1996, Allen Bradley, USA.
10 Saunders, L.A., Skibinski, G.L., Evon, S.T. and Kempkes, D.L. 'Riding the reflected wave', *IEEE PCIC*, Sept. (1996).
11 Suresh, R., *Wind Technologies,* Tata Energy Research Institute, New Delhi, India (19••).
12 Vithayathil, J., *Power Electronics–Principles and Applications,* McGraw-Hill, NewYork (1995).
13 *Wind Energy Technology,* Kirloskar Electric Co., India.

State agencies in India for micro siting of windmills

1 The Agency for Non-conventional Energy and Rural Technology (ANERT), PB No. 442, Thaycaud PO, Trivandrum 695 014, Kerala.
2 The Tamil Nadu Energy Development Agency (TEDA), Jhaver Plaza, IV Floor, 1-A, Nungambakkam High Road, Chennai 600 034, Tamil Nadu.
3 The Karnataka State Council for Science and Technology, Indian Institute of Science, Bangalore 560 012, Karnataka.
4 The Non-conventional Energy Development Corporation of Andhra Pradesh (NEDCAP), 5-8-207/2, Pisgah Complex, Nampally, Hyderabad 500 001, Andhra Pradesh.
5 The Gujarat Energy Development Agency (GEDA), Suraj Plaza II, 2nd Floor, Sayajiganj, Vadodara 390 005, Gujarat.

Special-Purpose Motors

Contents

Loads and installations that cannot use a standard motor due to their constructional needs, operational demands, special functions, unfavourable location of installation, hazardous items of process, etc. require a special motor, either in mechanical construction or in performance characteristics or both. During performance, such loads may require a prolonged starting time, a high starting torque, smoother acceleration, frequent cold or hot starts, stops and reversals etc. For all such applications, meticulous selection of the motor is essential, which should meet all the load requirements without excessive cost and yet achieve a higher efficiency and conserve energy in addition to fulfilling environmental needs. Special features of a few such applications are discussed below.

7.1 Textile motors

7.1.1 Loom motors (IS 2972 Part I)

Electrical features

Looms for weaving require high torque and motors for such applications in a 6-pole design must possess a minimum starting torque, T_{st}, of 230% and a pull-out torque, T_{po}, of 270% of the rated torque T_r. For an 8-pole design these values must be T_{st} – 200% and T_{po} – 230% of T_r. The recommended poles for such motors are 6 and 8. For light fabrics such as cotton, silk, rayon and nylon etc., the kW requirement of looms may vary from 0.37 to 1.5, while for heavy fabrics (canvas, woollens, jute etc.) from 2.2 to 3.7 kW. The looms may be driven directly, requiring a high torque as above, or through a clutch, which may engage after the motor has run to speed, when a normal torque motor may also be suitable. Unless, the motor is coupled through a clutch it should be suitable for frequent starts and stops.

Constructional features

A textile mill is normally humidified up to a predetermined level with a view to smooth the process and diminish breakage of threads. Fluff and cotton dust is wet and adheres to the motor's surface. It may accumulate on the fan and inside the cooling ribs (fins) and obstruct natural cooling. These motors are therefore unventilated and surface cooled (without cooling ribs) or have radial cooling ribs (Figures 7.1(a) and (b)). For easy mounting on the loom frame and also to make them adjustable, they are made either flat based or cradle mounted (Figures 7.2(a) and (b)).

7.1.2 Card motors (IS 2972 Part II)

These are similar to loom motors but must possess a still higher torque, i.e. a starting torque of the order of 350% and 275% of T_r and a pull-out torque 375% and 300% of T_r for a 6-pole and an 8-pole motor respectively. The card drum is a heavy rotating mass and has a high moment of inertia. The motor, therefore, undergoes a prolonged starting time and must be capable of withstanding 2.5 times the rated current for a minimum of two minutes. But unlike a loom motor, which requires too many starts and stops, the operation of carding is continuous. Such motors are also required to have circular fins and a flat base or lug mounting as for loom motors.

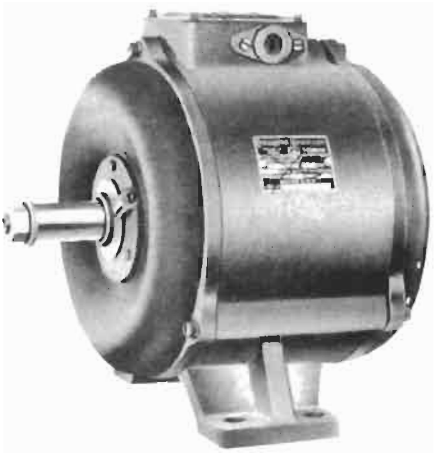

Figure 7.1(a) Surface cooled loom motor, without fins

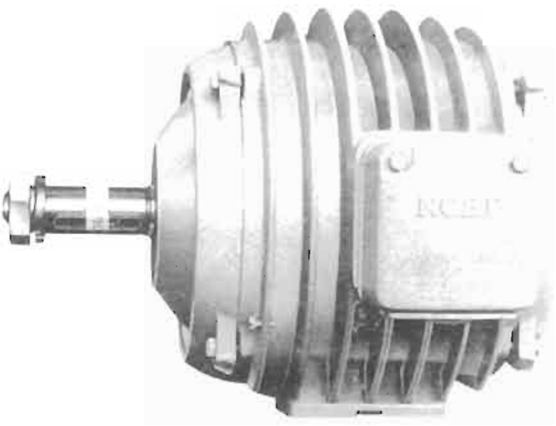

Figure 7.1(b) Loom motor with circular ribs (flat base mounted)

7.1.3 Ring frame or spinning frame motors (IS 2972 Part III)

These are required to make threads, i.e. the final drawing, twisting and winding of cotton. Such motors must possess very smooth acceleration to eliminate breakage of threads. They are recommended to have a starting torque of 150–200% of T_r and a pull-out torque of 200–275% of T_r with a mean acceleration torque of 150–175%. A normal acceleration time of 5–10 seconds is recommended. Faster acceleration may cause more breakages, while a slower acceleration may result in snarls and knots in the yarn as a result of insufficient tension.

Since card and ring frame motors are normally mounted inside the machine frame, there is an obvious obstruction in the cooling. With this in mind and to meet the torque requirements, the common practice is to choose the next

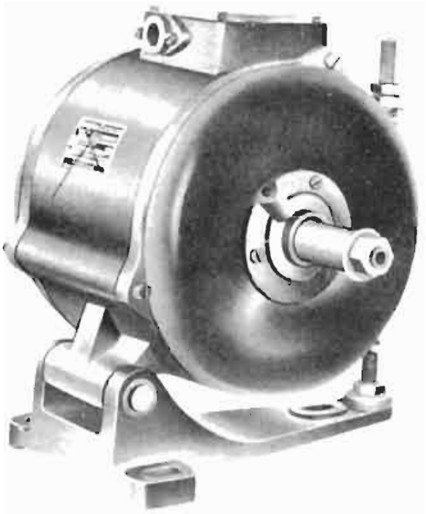

Figure 7.2(a) Surface-cooled loom motor without fins (cradle mounted)

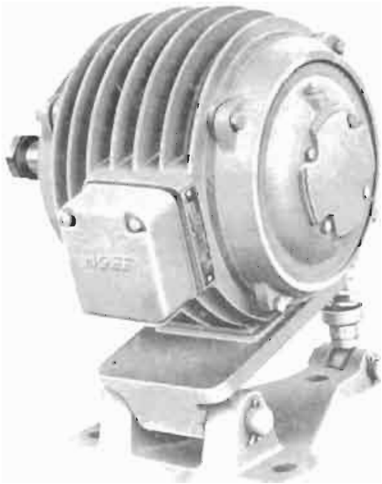

Figure 7.2(b) Loom motor with circular ribs (cradle mounted)

higher frames for such motors, compared to a standard motor. The latest practice is to employ a variable-speed drive. As for 'Cop Bottom Build' and 'Nose formation', the frame must operate at a slower speed to minimize the end breakage, while for the remaining yarn it may operate at the higher speed.

7.2 Crane motors

Crane and hoist motors

Such duties require a high starting torque, of the order of 225–275% of T_r and a low starting current, up to a maximum of five times the rated at the rated voltage as well as frequent starts, stops and reversals. They are normally short-time rated. To make these motors suitable for frequent starts and stops, the rotor is designed so that acceleration is quick and the heat generated during a start is low. This now limits the temperature rise of the rotor even after frequent starts, without sacrificing the frame size. It is possible to achieve this by keeping the GD^2 of the rotor low. In such motors also, fan cooling may be obstructed when a brake is mounted on the extended shaft at the non-driving end (NDE). For such installations also, sometimes a surface-cooled motor may be preferred. Alternatively, to increase the cooling surface, the housing may be designed with circular ribs, as shown in Figure 7.1(b) and 7.2(b).

Lift motors

Generally same as the crane motors, but comparatively silent in running and have a very low vibration level.

For general requirements of other types of lifting and hoisting applications see Table 7.1.

7.3 Determining the size of motor

For lifting/hoisting

The mechanical output of the motor for cranes and hoists in lifting the hook load is the useful work done by it. The losses produced in the crane or hoist mechanism are taken into account by the mechanical efficiency of the hoisting mechanism.

The output P_h of such motors is expressed by

$$P_h = \frac{F \cdot V}{102 \cdot \eta} \text{ kW} \qquad (7.1)$$

where

F = useful load in kgf
V = lifting speed in m/s
η = efficiency of the mechanism

This output corresponds to a continuous duty of drive. It must be suitably corrected for the duty cycle the motor has to perform (see equation (3.11)), i.e.

$$P_{heq} = \sqrt{\frac{P_1^2 \cdot t_1 + P_2^2 \cdot t_2 + P_3^2 \cdot t_3 + \ldots}{t_1 + t_2 + t_3 + \ldots}}$$

For traverse

$$Pt = \frac{1.027 \cdot T_{max} \cdot N_r}{1000 \cdot \eta} \cdot \text{kW} \qquad (7.2)$$

where

T_{max} = maximum torque, consisting of torque, resulting from weight load, friction and acceleration in kgf.m
η = efficiency of the whole mechanism for traversing.

Correct this output also depending upon the duty cycle as noted in equation (3.12), i.e.

Table 7.1 Electrical requirements for lift and crane motors

Type of duty	*Starting torque (T_{st})*	*Pull-out torque (T_{po})*	*Over speeding*	*If frequent acceleration, braking and reversals are required*
1 Portal and semi-portal wharf cranes	Standard as in manufacturer's design	≥ 2.25 of T_r	Up to 2.5 Nr or 2000 r.p.m. whichever is less	Yes
2 Overhead travelling cranes	> 2.25 of T_r	Up to 2.75 of T_r	As above	Yes
3 Lifts	(a) For squirrel cage motors ≥ 2.25 ≤ 2.75 of T_r (at any speed)	–	As above	–
	(b) For slip-ring motors, ≥ 2.25 of T_r (with suitable resistances)	–	As above	–
4 Power-driven winches for lifting and hauling	≥ 2.0 of T_r	≥ 2.25 of T_r for squirrel cage and ≥ 2.75 of T_r for slip-ring motors	As above	Yes

$$T_{eq}\,(\text{r.m.s.}) = \sqrt{\frac{T_1^2 . t_1 + T_2^2 . t_2 + T_3^2 . t_3 + \ldots}{t_1 + t_2 + t_2 + \ldots}}$$

Duty cycle

Duty types S_3, S_4 and S_5 as discussed in Chapter 3 are normally applicable to crane and hoist motors. For duty types S_4 and S_5, the duty cycle per unit time is greater than S_3. The most important factor is the number of switching operations per hour. A temperature rise in the motor occurs during acceleration, braking and reversing.

Many crane manufacturers specify that the motor should be suitable for half an hour or one hour duration according to the British practice still followed in some countries. In fact, it is not possible to correlate precisely these ratings with any of the duty factors. Hence the motors are designed for any of the duty factors of 15%, 25%, 40% and 60%. In fact the duty factors for different types of cranes have been standardized, depending upon their operation, after several years of experience. For example, the cranes operated in steel industries have different types of duty factors as follows:

Hoisting	60%
Traversing	40%
Travelling	60%
Slewing	40%

For steel mill auxiliary drives or for material handling equipment, the duty factor normally chosen for slip-ring motors is either 40% or 60%.

Standardization

The fixing dimensions of the motors are standardized at national and international levels. However, the output–frame relationship is not yet established for duty type rated motors. The Indian Electrical and Electronics Manufacturers Association (IEEMA) has issued a standard on crane duty motors in which an attempt is made to list the outputs against the IEC frames for S_3–6, S_4–150 and S_5–300 starts/hour duty types.

Static drives

With the availability of *V/f* drives and other advanced technologies through static controls, as discussed in Sections 6.2 to 6.4, the use of standard squirrel cage motors for such applications is a preferred choice.

7.4 Sugar centrifuge motors

In sugar mills a rapid separation of sugar crystals from molasses is achieved through the use of massecuite* and centrifugal force. The motor drives a basket full of molasses which undergoes repeated cycles of operation, i.e.

- Charging of massecuite: at a low speed, to prevent spillage, normally by a 24–28 pole motor.
- Intermediate spinning: at half the maximum speed of spinning, i.e. at 8 or 12 pole.
- Spinning: at a very high speed compared to the above, generally at 4 or 6 pole.
- Regenerative braking: When the process is complete and the residue molasses are purged, an oversynchronous braking is applied by changing the motor from spinning (4 or 6 poles) to ploughing (48 or 56 poles). This brake energy is then fed back to the mains (see Section 6.20.1(B)).
- Ploughing of sugar crystals: at very low speeds of 50 r.p.m. or so. This is achieved by a 48- or a 56-pole motor. A further reduction in speed is obtained by conventional electrodynamic or d.c. electric braking.

---

*Massecuite is used to form and then remove sugar crystals from molasses by a centrifugal technique.

The centrifugal basket is a dead weight to be accelerated to the maximum spinning speed. The motor operates for short durations at different speeds and varying loads. It is required to accelerate heavy inertia loads at each speed, and is normally designed for multi-speeds such as, 4/8/24/48 poles, 6/12/28/56 poles or 6/12/24/48 poles etc., depending upon the type of centrifuge. The rotor is given special consideration at the design stage to take account of the excessive heating due to rapid speed changes, braking and acceleration of heavy masses of massecuite and basket etc. (e.g. by better bracing, high-resistance rotor bar material, better heat dissipation etc.). During one complete cycle of massecuite there is a wide fluctuation in load and the motor speed and the motor operates at different h.p. A normal overcurrent release (OCR) therefore cannot protect the motor. Use of RTDs and thermistors as discussed in Section 12.7, can provide total protection against such variable load drives.

The method discussed above is a conventional one to achieve required speed variations. With the application of newer technologies, speed variations may be achieved more accurately and promptly with a single-speed motor, by the use of the following:

1 *Variable drive fluid couplings* (see Section 8.4.1(2)) These may not prove to be as effective from the point of view of energy conservation, as the motor will always be running at its rated speed and engagement of the coupling alone will vary the output speed.
2 *Static drives using solid-state technology* (see Section 6.2) This is the best method for achieving the required speed variations, not from the point of view of quicker and smoother speed variations, but of total energy conservation even at low outputs.

Note

Application of solid state technology

For all the applications discussed above, which may require special starting and/or pull-out torques or speed variations, the use of static drives is more appropriate today. With the use of this technology, a standard motor can be made to perform any required duty, except the constructional features and the applicable deratings as discussed in Chapter 1. See also Example 7.1.

The use of special motors was more relevant until the 1980s, when solid-state technology was still in its infancy and was not so widely applied. With the advent of static drives, as discussed in Sections 6.2–6.4, the use of standard motors is gradually becoming more common for all these applications. The drive itself can alter the supply parameters to the required level to make a standard motor operate and perform within desired parameters, besides conserving energy. The purpose of describing a few of these applications is only to indicate their non-standard features, where a standard motor with normal controls may not be able to perform the required duties.

7.5 Motors for deep-well pumps

These pumps are used to lift deep groundwater or any other liquid from hard or rocky soil. Moreover, the liquid level may be so deep that it may prevent the use of a centrifugal pump. Theoretically, the maximum depth from which water can be lifted against atmospheric pressure is 9.8 m (32 feet). To lift water or any other liquid from greater depths than this, one has no option but to lower the pump into the well, in other words, to lower the entire pump house below ground level, which is not economical, practical nor advisable. Moreover, as the groundwater table may be receding rapidly one cannot be certain of an ideal depth for such pump houses. A depth considered ideal today may not be so with in a few years as the water level may recede further. Better alternatives are found in a deep well turbine and a submersible pump, described briefly below.

7.5.1 Deep-well turbine or a vertical wet pit pump

Use of vertical hollow shaft motors

With the use of such pump sets, the pump alone is lowered into the pit and the prime mover is mounted above ground level. These pumps can lift water or any other liquid from a depth of more than 10 m. They are used extensively for irrigation, domestic use, sewage disposal, etc., and are easy to install and maintain. They have an extra-long drive shaft and an extra number of bearing assemblies to hold the long drive shaft in position and to eliminate the risk of excessive shaft vibration and hunting around its own axis. They are built to maintain permanent shaft alignment, have high thrust capacity and are compact in size.

The shaft of the pump goes through the motor shaft to the top of the motor and is bolted there. The pump shaft can be adjusted at the top to set the impeller by tightening or loosening the nut holding it. This also eliminates the use of a flexible coupling between the motor and the pump. These motors are always constructed in a vertical flange design and are provided with heavy thrust bearings to take the additional load of the pump impeller, its shaft and the fluid in the shaft. These motors are produced in squirrel cage design for simplicity and also because they have to drive only a light-duty load and operate at a fixed speed. They are also provided with an anti-reverse ratchet arrangement to prevent the rotor from rotating in the reverse direction caused by backflow of liquid in the event of an abrupt shutdown and during an accidental phase reversal. A reverse rotation may cause the pump shaft to unscrew. Since the motor is vertical flange mounted and the pump shaft passes through the motor's hollow shaft, it is called a vertical hollow shaft motor (see Figures 7.3 and 7.4).

7.5.2 Submersible pumps using submersible motors

A more economical alternative is found in a submersible pump where the pump, directly coupled with the prime mover, is slid into the tubewell through narrow pipes. Narrow pipes are easy to sink into rocky terrain or very deep water levels. They are less expensive and are easy to install due to the elimination of the need for a pump house. Once the unit is slid into the well it requires little maintenance. (See Figures 7.5–7.7.) Such pumps have a standard centrifugal multistage arrangement, and the motors are required to work under water or any other liquid. These motors have an exclusive application for submersible pumps.

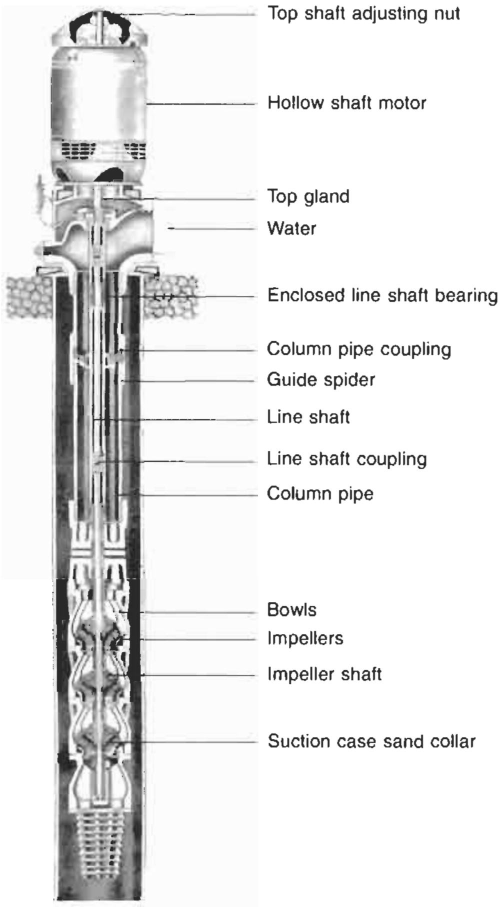

Deepwell turbine pump fitted with a hollow shaft motor

Figure 7.3(a)

The application and use of deep-well turbine and submersible pumps, is extensive and a choice will depend upon the depth of liquid and the rate of discharge. In rocky areas, where the digging of larger well cavity is a difficult task, submersible pumps provide an easy alternative. Similarly, for higher heads and where only a small quantity of liquid is to be pumped, these pumps are preferred. We discuss below the characteristics of these motors and the application of these pumps.

Construction

The pump is placed above the motor and the water inlet is provided between the pump and the motor (Figures 7.5–7.7). The discharge cover or case contains the top journal bearing and small thrust pad to cope with the upward axial thrust during start-up. The pump shaft is supported in the journal bearings. The weight of the pump shaft and the hydraulic axial thrust is borne by the motor shaft and thrust bearing through a rigid mesh coupling.

Non-return valve arrangement

This is provided to prevent reverse rotation of the pump in the event of a power failure or a deliberate shutdown due to backflow of liquid from the rising mains (pipelines). This is located immediately after the last pump stage casing/discharge outlet to prevent the shaft from rotating in the reverse direction. The provision of a non-return valve also ensures that the pump always starts in a shut-off condition, when the power requirement is at a minimum.

Special features of a submersible motor

These motors are comparatively long and slender requiring a smaller bore diameter to slide easily into the bore hole/bore well with the pump.

Stator winding and insulation

The conductors are waterproof PVC (polyvinyl chloride)-insulated winding wires. These are sprayed with polyamide and conform to IEC 60851 and IEC 60182. For stator windings, both open and closed type (tunnel type) laminations with a PVC lining are used. Closed type laminates provide a smooth bore and reduce frictional losses. The windings are in the shape of ready-made coils or pull-through wires. For LT sub-mersible motors, the winding cable must be suitable for 1000 V, whereas the windings are wound for 415 V ±6% or any other designed voltage.

Rotor

The rotor is squirrel cage with short-circuited copper rings at the ends. Here also, to vary the starting characteristics of the motor, the skin effect is used by providing deep bars, flat bars, tapered bars or other types of slots (discussed in Section 2.3).

Torque

The minimum value of pull-out torque (T_{po}) at the rated voltage should be 150% of the rated torque according to IS 9283.

Characteristics

The normal characteristics of these motors are generally the same as those of a standard squirrel cage motor.

Efficiency

These motors have a lower efficiency as a result of running in liquid, causing more liquid drag and also axial thrust bearing loss, which is also a part of the motor. However, this lower efficiency of the motor is compensated by fewer mechanical and hydraulic losses in a submersible motor-pump installation, compared to a vertical turbine pump installation.

Performance

The effect of frequency, voltage variation and ambient

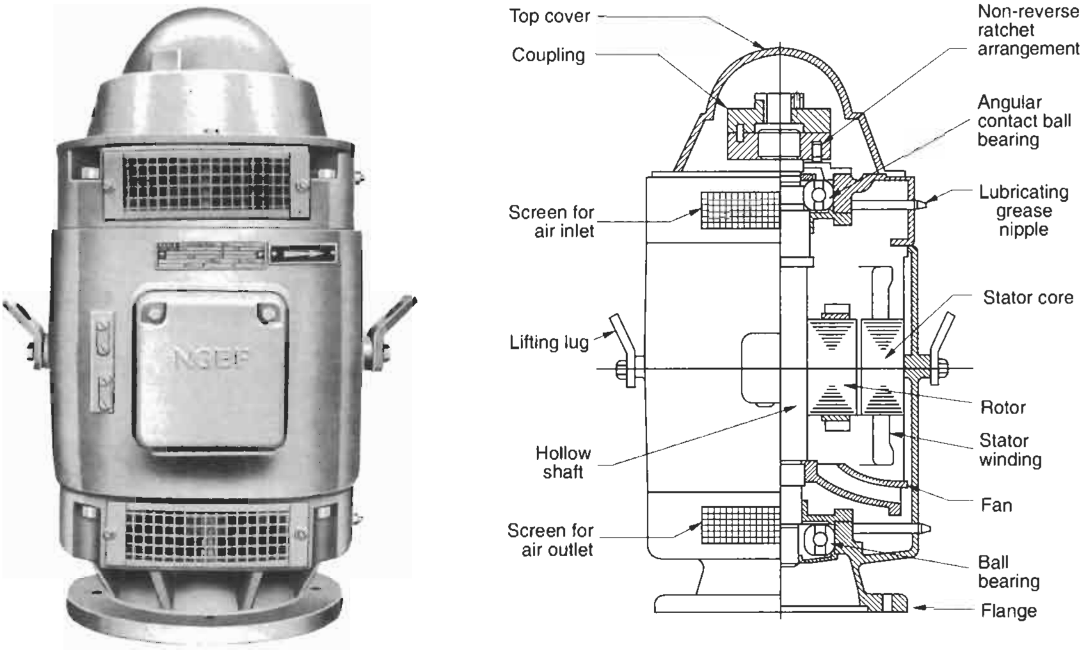

Vertical hollow shaft squirrel cage motor

Figure 7.3(b) Vertical hollow shaft squirrel cage motor and its inside view

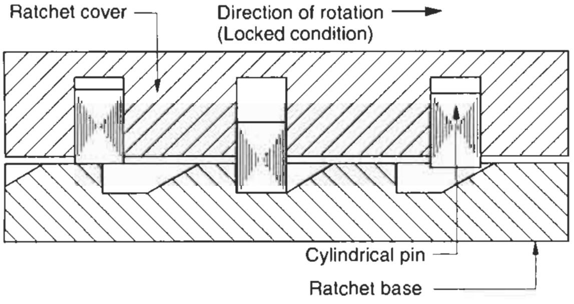

(1) When the motor is switched off, the pins drop down due to gravity and lock the rotor for any movement in opposite direction

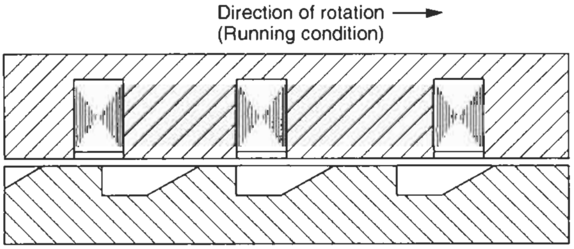

(2) When the motor is started, the pins are lifted up by the ratchet base and are held in the ratchet cover due to centrifugal force thus releasing the ratchet for rotation

Figure 7.4 Ratchet arrangement

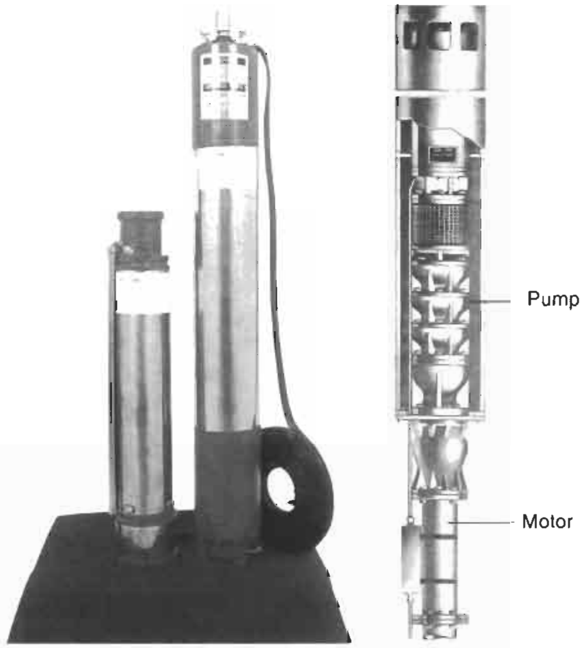

A small rating submersible motor and pump in disassembled condition

Submersible pump fitted with a submersible motor

Figure 7.5(a)

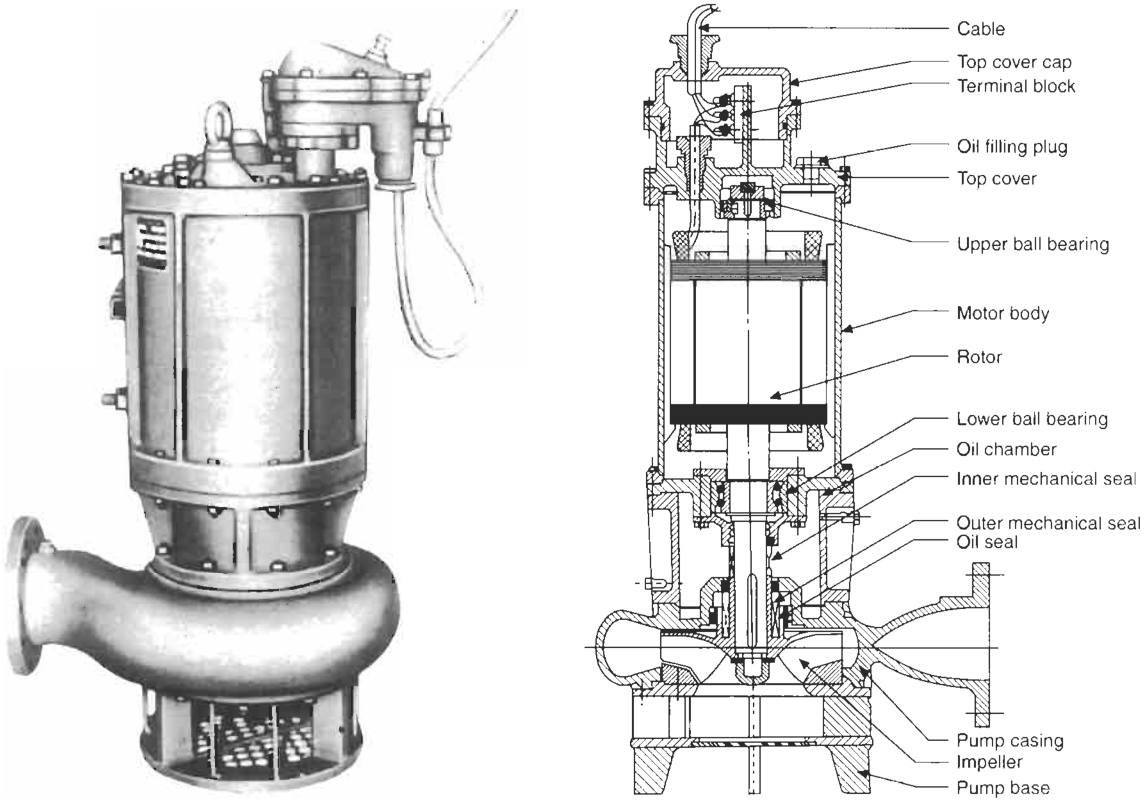

Figure 7.5(b) Sewage submersible pump and its cross-sectional view (Courtesy: SU Pumps)

temperature etc. on the performance of such motors is as for standard motors, discussed in Chapter 1. The general routine tests and methods of conducting them are also similar to those for standard motors discussed in Chapter 11.

Protection

The protection for such motors is also as for standard squirrel cage motors. See Chapter 12.

Rewinding of stator

The maintenance of such motors at site is easy, since the stator can be wound with readymade PVC insulated winding coils, and does not need a varnish impregnation and subsequent baking etc., unlike a standard motor. It is thus easy to rewind them at site.

Bearings

The bearings are water lubricated. The typical materials of construction are carbon, copper alloys, bakelite and ceramics. The mechanical seals, like a double oil seal protected with a cap called a Sand Guard, are robust and perfect in sealing the motor to prevent the entry of pumped liquid into the bearing housing and vice versa to prevent any possible contamination.

Cooling

The motor stator windings and bearings are cooled through the pumped liquid passing externally around the motor body through heat conduction. The interior of the motor body (housing) is normally filled with a fluid to facilitate rapid dissipation of heat. The general practices are:

1. Water-filled motors: These are initially filled with clean water. Distilled water was originally used as an initial filler, but with the passage of time, clean water was found to be a better substitute and now only clean water is used as an initial filler.
2. Oil-filled motors: Instead of water oil is now used with oil and mechanical seals at the bearings to prevent leakage of oil through them.
3. Air-filled: The latest practice is to keep the housing empty. This arrangement is found to be economical and the motor operates at higher efficiency.

Motor shaft

The motor with a short shaft length has a shaft of stainless

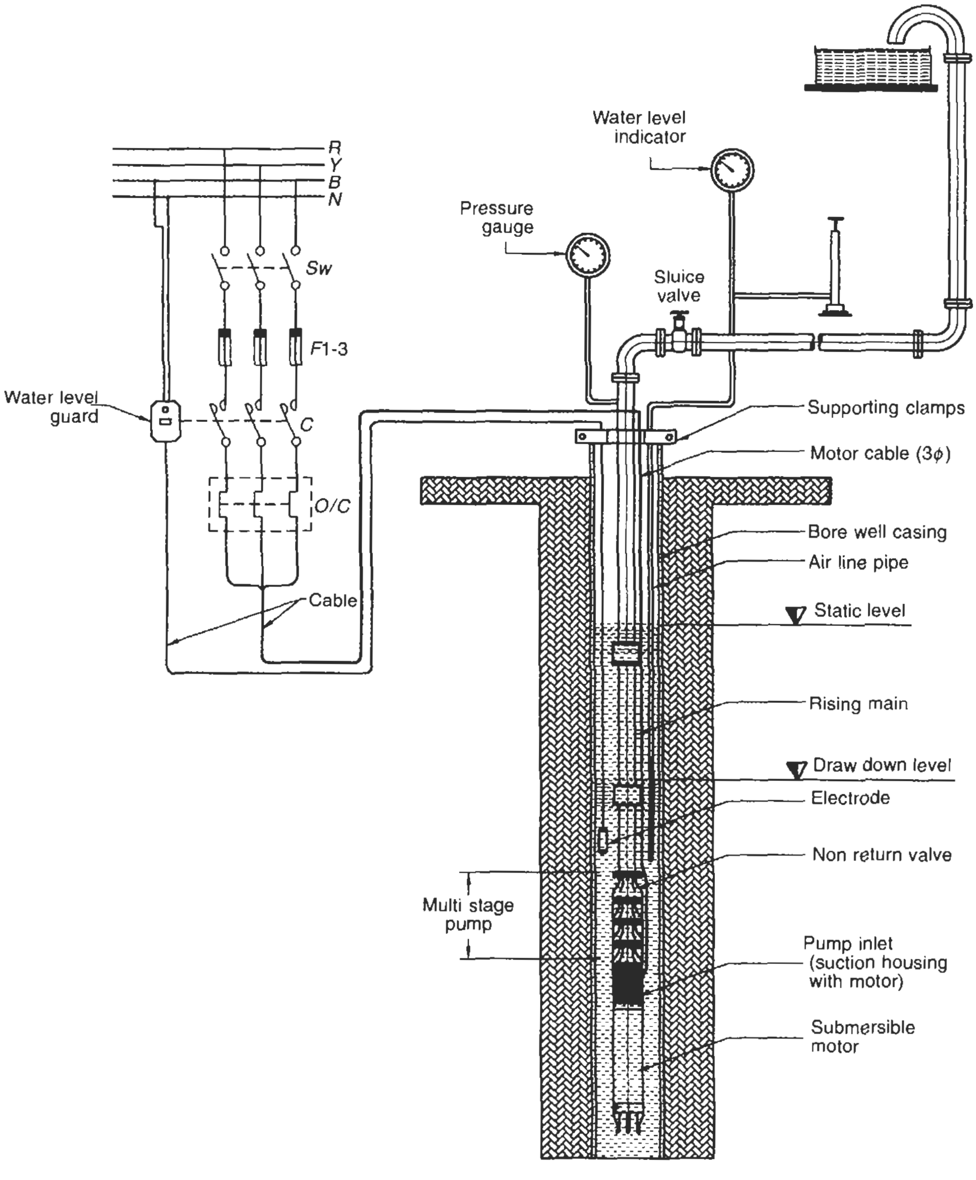

Figure 7.6 Typical arrangement of a submersible pump

steel generally while those with longer shafts have shafts made of carbon steel with stainless steel protective sleeves in the bearing portion.

Sizes of submersible motors

Submersible motors up to 350 h.p. and suitable for voltages up to 3.3 kV are being produced in India and as large as 5000 kW, 11 kV by KSB in Germany (Figure 7.8).

Applications

- Water extraction from bore holes and river beds for water supply and irrigation
- Flood water controls
- De-watering of coal, tin, copper or gold mines, coal washing and sludge pumping
- Pumping industrial effluents
- Sewage duties, industrial slurries and ash handling
- De-watering of dirty water when building roads, dams, harbours, tunnels, etc.
- Seawater services on onshore platforms, for drinking, washing and firefighting services on off-shore platforms
- Seawater lift pumps for cooling gas compressors on oil platforms
- Seabed trenching from remote-operated vehicles (Figure 7.9)
- Oil extraction

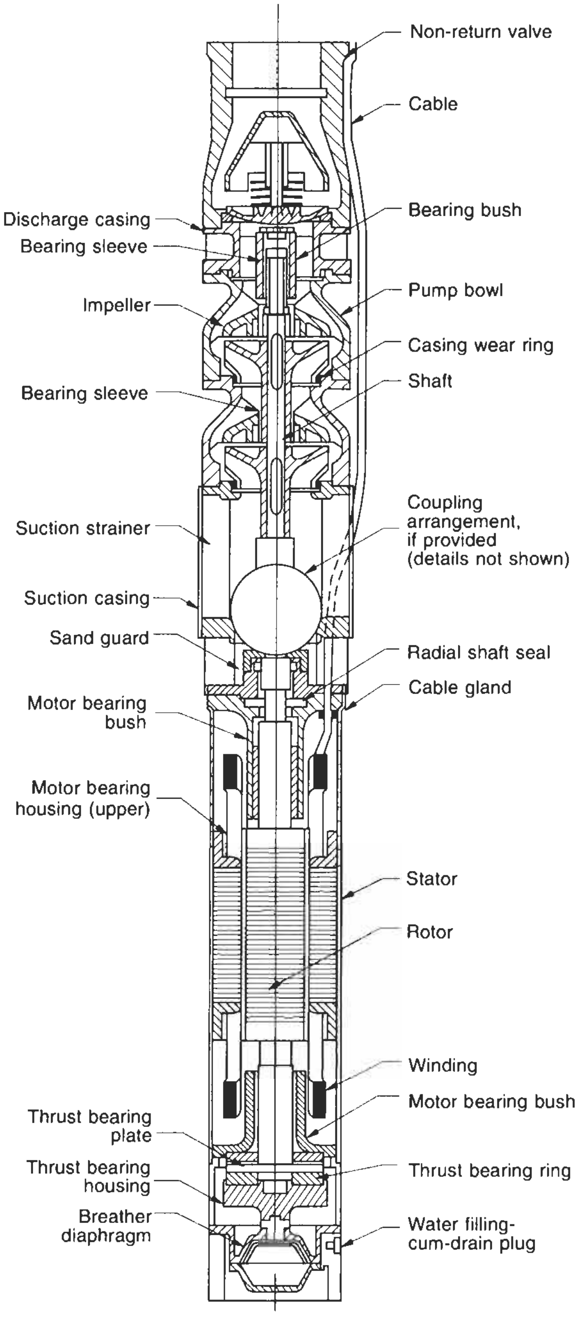

Figure 7.7 Nomenclature of a submersible pump set according to IS 9283

- Deep-sea mining for manganese nodules etc. (Figure 7.9). Many riches lie on the seabed. To explore this hidden wealth, submersible pumps have proved to be a boon. Figure 7.9 shows the arrangement of a general seabed exploration. Here three submersible pumps have been used in series, encased in a shrouding to extract and lift manganese nodules from a depth of over 5000 m to the sea surface

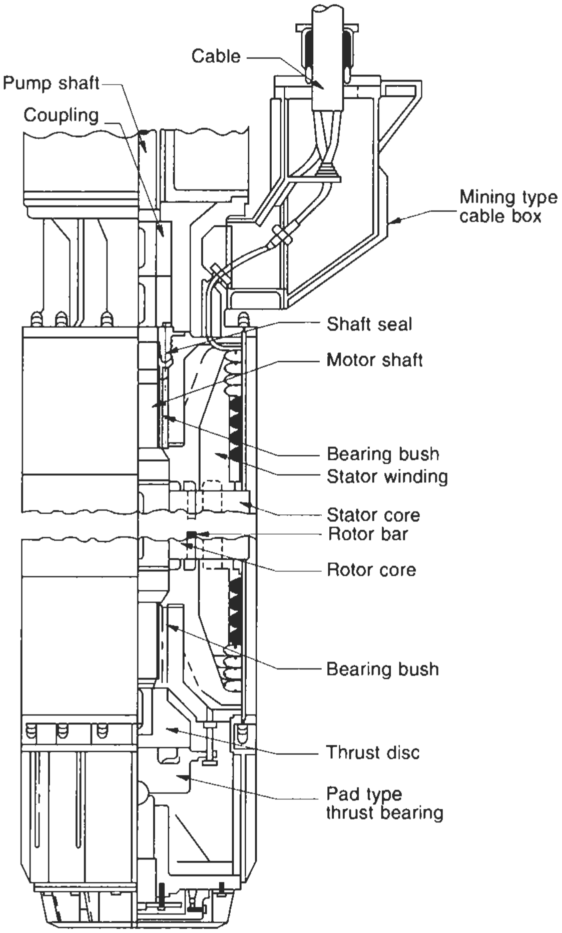

Figure 7.8 Sectional arrangement of a submersible squirrel cage motor of 860 kW, 3∅, 50 Hz, 3.3 kV, 1470 r.p.m. (Weir pumps)

- Refineries
- Chemical and process plant duties

7.6 Motors for agricultural application

In developing countries particularly, rural power distribution networks normally suffer from wide voltage fluctuations. This is generally because of LT loads which cause a high voltage dip. Consequently, the motors are designed for voltages as low as 415 V –20% to +5% and generally 415 V–12 $\frac{1}{2}$ %, i.e. 360 V. For such high voltage fluctua-tions, the general practice is to select a motor larger than normal. These motors may be designed for a low starting torque, in view of their applications for pumps, winnowers, threshers etc., all requiring low starting torques. The rotor can also be designed for a low starting current, and thus protect the network from a high starting voltage dip.

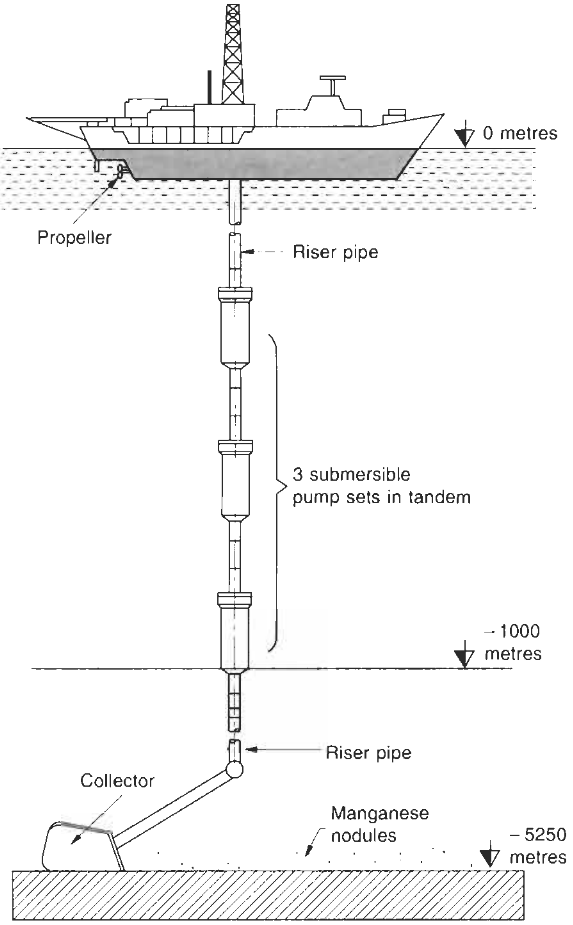

Figure 7.9 Deep-sea mining through submersible pumps (typical)

Note IS 7538 recommends a voltage variation of -15% to +5%. But in view of the excessive voltage fluctuations in rural areas, the practice is to design a motor even for -20% to +5% of 415 V. A voltage of 415 V is considered for the sake of illustration only, for series I voltage systems (Table 13.1). It will depend upon the voltage of the LT system being used.

7.7 Surface-cooled motors

These motors are without the cooling fan and may be with or without the cooling fins shown in Figures 7.1(a) and 7.2(a). Where cooling by the external fan is likely to be obstructed, for reasons discussed in Sections 7.1 and 7.2, the application of such motors is recommended. A normal motor without a fan will become over-heated and will require a larger frame to provide extra copper and a larger surface area for heat dissipation. The higher the speed of the motor, the higher will be the cooling effect of the fan, and the higher will be the derating of the motor frame to compensate for the reduced cooling. As a rough guide, the outputs shown in Table 7.2 may be adopted for a surface-cooled motor over a fan-cooled motor (see also Figure 7.10). For an exact derating contact the manufacturer.

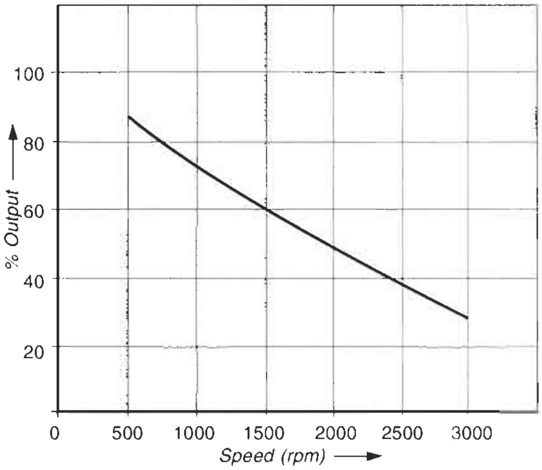

Figure 7.10 Approximate output of a surface-cooled motor

Table 7.2 Approximate output of surface cooled motors

Serial no.	*Number of Poles*	*% output*
1	2	28
2	4	60
3	6	70
4	8	75
5	10	80
6	12	82

7.8 Torque motors or actuator motors

These motors are designated by their 'stall-torque' rather than kW ratings. They are fitted with a brake with an adjustable torque and are normally surface cooled. Their application is for auxiliary loads, which sometimes require a very small movement of the motor, even less than a whole revolution such as to actuate a motorized flow valve to control the flow of liquid or gas. They thus have a high slip characteristic (high rotor resistance) and are capable of providing the maximum T_{st} with the minimum power input. The design of such motors is thus different from that of a normal motor and may possess some of the following features:

- They may be short-time rated.
- Their moment of inertia is kept low to restrict their times of acceleration and deceleration (equation (2.5)) to facilitate frequent starts and stops.
- The rating is designated by torque rather than kW.
- Maximum torque occurs at the locked rotor condition, i.e. when $S = 1$ (Figure 7.11).
- I_{st} is kept much lower than a standard motor, as it may

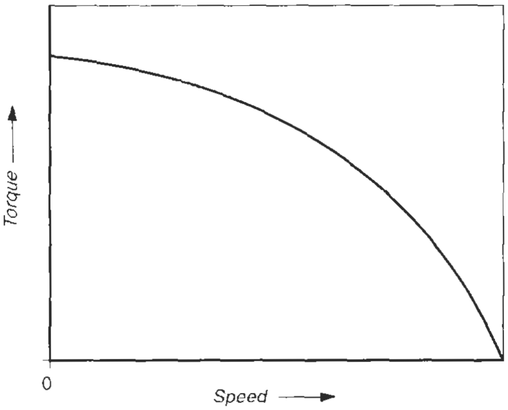

Figure 7.11 Characteristic of a torque motor

be required to operate frequently and a high I_{st} would be a deterrent.

- The speed–torque characteristics are almost linear, with torque falling with speed (Figure 7.11).
- There is no T_{po} region, thus no unstable region. The motor can operate at any speed up to the rated one without any stalling region.
- The locked rotor thermal withstand time is much higher than for a standard motor.

Likely applications

- Wire-winding machines
- Roller tables
- Frequent starts and reverses
- Material handling
- Valve actuator
- Vane control
- Bagging machines
- Fast tapping machines
- Clamping and positioning devices

7.9 Vibration and noise level

Excessive vibrations according to international codes can cause mechanical failure in the insulation by loosening wedges, overhangs, blocks and other supports that hold the stator and the rotor windings or rotor bars in their slots. Vibrations also tend to harden and embrittle copper windings and may eventually break them when they become loose (see also Sections 11.4.6 and 11.4.7).

There are some essential features that a good motor should possess, and among these are vibrations and noise level. The noise may be magnetic or aerodynamic, assuming that there are no frictional or other noises emanating from the motor. Magnetic noise is due to resonant excitation of the stator core by slot harmonics, caused by the electro-magnetic circuit of the machine (Section 23.6(a)) and loose clamping of the stator's steel stampings and the motor's rotor core. Or loose rotor bars and magnetic unbalance, when the magnetic and geometrical axes of the motor are not concentric as well as tooth ripples and magneto-striction. Aerodynamic noise is caused by the flow of cooling air at a higher peripheral speed over the cooling fins and the rotor bars as well as unbalanced rotating masses, aerodynamic loads and some secondary effects such as noise from the bearings, instability of the shaft in the bearings, passive resistance and aerodynamic expansion.

In an electric motor, although such parameters are inherent, they can be tolerated only to a certain extent. IEC 60034-14 gives these levels as indicated in Table 11.3. For applications such as household appliances, escalators in residential buildings, offices and hospitals, and for machine tools, the vibration levels must be even lower to eliminate the transmission of these as far as possible through the driven structure to the building or to the cutting tool in the case of a machine tool. Unless the vibrations are reduced to a reasonably low level, they may cause a noise nuisance to the occupants of a building or affect the accuracy of the cutting tool and the machine. Research on the effect of noise on a human body has revealed that noise level (sound pressure level) must be limited to 85 dB for a human body to work safely without fatigue, for eight hours a day and without causing a health hazard on a continuous basis. In the OSHA (Occupational Safety and Health Administration, USA) regulations the maximum industrial noise level is 90 dB. Table 7.9 shows the likely noise levels and their sources of origin. Vibrations, when transmitted from the source to the connected appliance or structure or a machine tool, become magnified, depending upon the contact surface area and create noise. In fact, vibrations are the primary source of noise. In machine tools, the vibrations are transmitted from the motor body to the cutting tool and affect its accuracy. For precision work and for sophisticated machine tools, a vibration level as low as 2 microns is sometimes preferred.

Vibrations and noise levels are mainly associated with the mechanical construction and electrical design of the motor. Sound mechanical construction and a balanced rotor, a tightly fastened core and smooth bearings can eliminate vibrations and mechanical noise to a large extent. Also a better electrical design can eliminate electrical vibrations in the stampings, due to magnetic forces and higher harmonics. A better electrical and mechanical design will thus mean:

1. Rigid fastening of the stator core to the housing
2. Smooth and frictionless bearings with proper greasing
3. Precision dynamically balanced rotating parts. The leading Indian manufacturers recommend and maintain a vibration level, peak to peak as shown in Table 7.3. See also Table 11.3, according to IEC 60034-14
4. A uniform air gap between the stator and the rotor
5. Judicious selection of stator and rotor slots, with angle of skew and glue density
6. Magnetic loading, i.e. flux density
7. Windage noise (noise at the suction and the exhaust of the cooling air). This makes a large contribution to the total noise emanating from a motor. To suppress this, some manufacturers provide the following additional features or noise-suppression devices in

Table 7.3 Maximum vibration levels, as practised by Indian manufacturers

Speed Ns r.p.m. at 50 Hz	*Vibration level, peak to peak (double amplitude)*	
	LT motors (microns)	*HT motors (microns)*
1. 3000	15	15
2. 1500	40	25
3. Up to 1000	40	25

Note In higher speed ranges and for HT motors, these levels of shaft vibration are generally of the same order or slightly better than prescribed in IEC 60034-14, corresponding to Table 11.3.

the fan and fan cover. The basic purpose of all these is to reduce to a minimum the windage (air friction) noise at the suction and exhaust points:

- By providing a unidirectional axial flow fan
- By providing a sound-absorbing fan cover at the non-driving end, as shown in Figure 7.12
- By transforming the intake axial air flow to a radial air flow, as illustrated in Figure 7.13, thus significantly reducing frictional and hence suction noise
- By changing the geometry of the fan cover, i.e. by providing muffling cones (noise-hood) at the driving end (Figure 7.14) and providing felt wool on the driving end fan cover to absorb the friction and intensity of exhaust air.

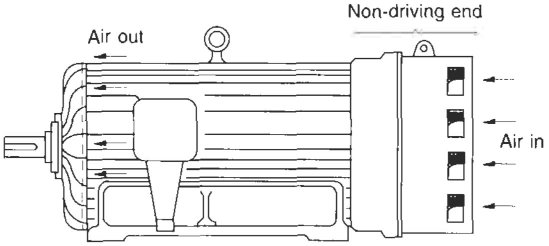

Figure 7.12 Sound-absorbing fan cover at the non-driving end

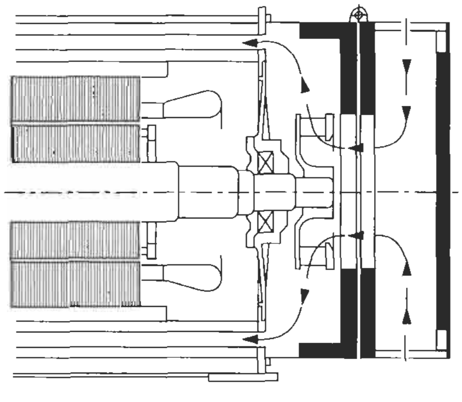

Figure 7.13 Radial flow of air to reduce suction noise

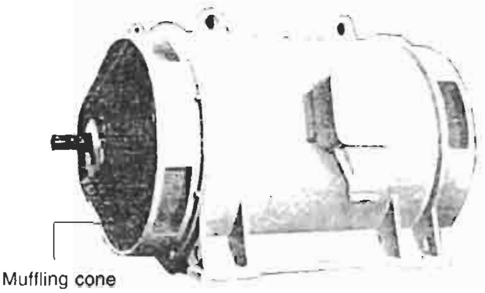

Figure 7.14 Motor with muffling cone and lining of round felt wool to absorb the exhaust noise of air

7.10 Service factors

When a motor is expected to operate in unfavourable conditions such as:

- Intermittent overloading
- Higher ambient temperatures
- A restricted temperature rise as for a spinning mill, a refinery or a hazardous area
- Frequent starts, stops and reverses
- or any such conditions during operation

and when it is not possible to accurately define their likely occurrences or magnitudes, it becomes desirable for the motor to have some in-built reserve capacity. To account for this, a factor, known as the 'service factor', is considered when selecting the size of the motor. A 'service factor' in the range of 10–15% is considered adequate by practising engineers. With this service factor, no more derating would normally be necessary. See also Example 7.1 at the end of the chapter.

7.11 Motors for hazardous locations

Areas prone to or contaminated with explosive gases, vapours or volatile liquids are at risk from fire or explosions. A hazardous area is a location where there is a risk of fire or explosion due to the formation of an explosive mixture of air and gas or inflammable vapour. Normal motors may emit sparks or some of their parts accessible to such environments may reach a temperature high enough to ignite inflammable surroundings during normal running. Special motors have thus been developed for such locations and may be one of the following types:

1 Flameproof (FLP) or explosionproof type (Ex. 'd')
2 Increased safety type (Ex. 'e')
3 Pressurized type (Ex. 'p')
4 Non-sparking type (Ex. 'n')

IEC 60079-14 provides general guidelines for the selection of electrical equipment for hazardous areas.

7.11.1 Classification of hazardous locations

It is important to identify areas in accordance with the expected degree of fire hazard to facilitate an appropriate and economical selection of electric motors. These areas, according to IEC 60079-10, are classified into three categories as follows.

Zone 0

This is a location which is continuously contaminated with explosive gases, chemical vapours or volatile liquids and thus is highly susceptible to fire hazards. Installation of electrical machines in such areas should be avoided as far as possible, to reduce cost, facilitate maintenance and take other precautions.

IEC 60079-14 recommends the use of only intrinsically safe apparatus in such locations. Intrinsically safe apparatus and their electrical circuits are basically low-energy devices and release only small amounts of energy, insufficient to ignite the surrounding atmosphere. The devices may be to record, sense or monitor the operating parameters of equipment operating in such locations or the condition of the surroundings. They may be mounted on the surface rather than the interior of an enclosure. Circuits connecting such devices and instruments are also made intrinsically safe for use in such areas. We show in Section 7.12 that an electric motor is not suitable for such locations (see also Section 7.16).

Zone 1

This is a location which is not permanently contaminated but is likely to be prone to fire hazards during processing, storage or handling of explosive gases, chemical vapour or volatile liquids, although under careful and controlled conditions. For such locations in addition to a flame- or explosion-proof enclosure, type Ex. 'd', an increased safety motor, type Ex. 'e' or a pressurized motor, type Ex. 'p' may also be considered to be safe.

Zone 2

This is a location safer than Zone 1 with a likelihood of concentration of explosive gases, chemical vapour or volatile liquids during processing, storage or handling. This would become a fire hazard only under abnormal conditions, such as a leakage or a burst of joints or pipelines etc. Such a condition may exist only for a short period. A standard motor with additional features, as discussed below, may also be safe for such locations. A non-sparking type, Ex. 'n', or an increased safety motor, type Ex. 'e', may also be chosen for such locations.

Note Some applications creating hazardous conditions are petrochemical or fertilizer plants, refineries, coal mines etc., where inflammable gases and volatile liquids are handled, processed and stored.

Mines, collieries and quarries

In view of the magnitude and intensity of explosion and fire damp hazards at such locations, a motor with superior electrical and construction design is recommended. IEC 60079-0 categorizes such areas as Group I and recommends only flame-proof motors, type Ex. 'd', depending upon the nature and the ignition temperature of the gases, chemical vapour or volatile liquids at such locations. The maximum permissible temperature at the external surface of the machine must also be limited so that it does not ignite the inflammable substances at the installation.

7.11.2 Classification of gases, chemical vapour and volatile liquids

Based on the ignition temperature of these inflammable substances, Table 7.4 shows the groups of substances requiring specially constructed motors.

Table 7.4 Grouping of gases, chemical vapour and volatile liquids, their ignition temperature and limits of permissible temperature at the external surface of the motor based on IEC 60079-20

Ignition group	*T1*	*T2*	*T3*	*T4*	*T5*	*T6*
1 Ignition temp. (°C)	Above 450	300/450	200/300	135/200	100/135	85/100
2 Grouping	Acetone Ethane Ethyl-acetate	Acetylene Ethyl amine Ethylene	Acetaldehyde Ethyl glycol Crude oil	Ethyl-ether		Carbon disulphide Ethyl Nitrite
	Ammonia Benzene Acetic acid Carbon monoxide Methane (fire damp)	Iso-amyl acetate Butane n-Butyl alcohol n-Propyl alcohol Butanol Methanol	n-Hexane Turpentine Mineral oils Cyclo hexene			
	Naphthalene Propane Coal gas (town gas) Petroleum Toluene Water gas Hydrogen					

7.12 Specification of motors for Zone 0 locations

For Zone 0 locations only intrinsically safe, low-energy apparatus is recommended. Induction motors, being large energy sources, release high energy, particularly during switching or a fault condition, as discussed in Section 6.14.1, are not suitable for such locations. See Section 7.16 for more details.

7.13 Specification of motors for Zone 1 locations

For Zone 1 locations, the following types of enclosures are recommended

7.13.1 Flame- or explosion-proof motors, type Ex. 'd'

IEC 60079-1 defines the basic requirements for such motors which, besides limiting the maximum temperature of any part of the motor, accessible to the contaminated area, as shown in Table 7.4, also maintain definite lengths of paths, air gaps, widths, and diametrical clearances between various rotating and stationary parts to avoid any rubbing and arcing. The following design considerations may also be noted.

Design considerations

These motors should be able to withstand an internal explosion of inflammable gases, chemical vapour or volatile liquids without suffering damage or allowing the internal inflammation to escape to external inflammable substances through joints or other structural openings in the enclosure. (The explosion may have been caused by the gases, vapour or volatile liquids that might have entered or originated inside the enclosure.)

Apart from withstanding the internal explosion, the construction must be such, that the flame escaping from the interior is cooled down to such an extent that it is rendered incapable of igniting the surrounding hazardous atmosphere. This is achieved by providing joints with extra long surfaces (flame paths) and special clearances (gaps). The flame path is the breadth or the distance across the face of the flange, and the gap is the distance between the two faces of the flange, as shown in Figure 7.15. The requirements of minimum lengths of flame paths and maximum gaps for various gas groups are specified in IEC 60079-11. Some of the important constructional features of such enclosures are as follows:

- All components such as stator housing, end shields, terminal box and covers etc. are pressure tested before use.
- No light metal such as aluminium is used as an external surface to avoid frictional arcing.
- The maximum surface temperature must remain below the temperature class specified in Table 7.4 for a specific application.

7.13.2 Increased safety motors, type Ex. 'e'

These motors will also suit areas defined for Zone 1. Use of HT Ex. 'e' motors, however, should be avoided in this zone. Such enclosures do not produce arcs internally and also restrict the temperature rise of any part accessible to such an environment to a limiting value, during start-up or run, in accordance with the applicable class of insulation shown in Table 7.5. The limiting temperature must be less than or equal to the ignition temperature of the prevalent atmosphere shown in Table 7.4, otherwise the limiting temperature will become the same as the ignition temperature, according to Table 7.4. The rotor temperature is also restricted to 300°C during start-up, unless Table 7.4 shows a lower limiting temperature.

Design considerations

IEC 60079-7 outlines the basic requirements for increased safety, type Ex. 'e' motors as follows:

- The enclosure must have a high degree of protection

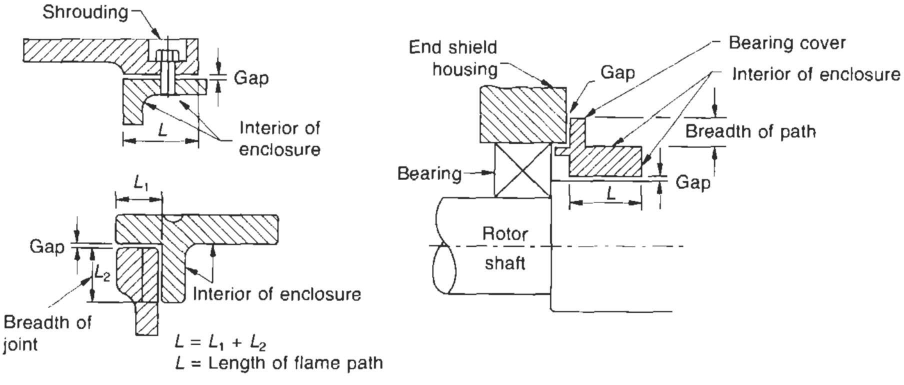

Figure 7.15 Flame paths and gaps in a flame-proof or explosion-proof motor

Table 7.5 Limiting temperature and limiting temperature rise for type Ex. 'e' motors

		Measuring method	*Class of insulation*				
			A	*E*	*B*	*F*	*H*
Limiting temperature under rated service conditions	(°C)	R T	90[a] 80	105[a] 95	110[a] 100	130[a] 115	155[a] 135
Limiting temperature rise under rated service condition (referred to an ambient temperature of 40°C)	(°C)	R T	50 40	65 55	70 60	90 75	115 95
Limiting temperature at the end of time t_E^b	(°C)	R	160	175	185	210	235
Limiting temperature rise at the end of time t_E^b (referred to an ambient temperature of 40°C)	(°C)	R	120	135	145	170	195

As in IEC 60079–7

R – by resistance method.

T – by thermometer method (only permissible if the resistance method is not practicable).

[a] These values are restricted by 10°C, compared to the working temperature prescribed for standard motors, as in Table 9.1.

[b] These values are composed of the temperature (or the temperature rise) of the windings in rated service and the increase of temperature during time t_E.

to prevent entry of dust, water or moisture. The minimum protection specified is IP:54 (IP:55 is preferred) according to IEC 60034-5.

- All terminals must be the anti-loosening and anti-rotating types.
- The minimum clearance and creepage distances must be maintained for conductors as specified.
- The temperature rise of windings must be 10°C lower than that specified for normal machines.
- The mechanical clearance between rotating parts, e.g., fan and fan cover or the radial air gap between the stator and the rotor, should not be less than specified to prevent sparking.
- The temperature of the windings and other parts must not exceed the limiting temperature specified in Table 7.5, even if the motor, after a prolonged operating period, remains energized in a stalled condition, for a specified time of t_E seconds while t_E will not be less than 5 seconds.

All gases are classified according to their ignition temperatures as in Table 7.4. Table 7.6 recommends the limiting surface temperatures of motors for these ignition categories in terms of temperature classes T_1 to T_6. The motor's surface temperature must not exceed the limiting temperature specified in Table 7.6 under the same condition and time t_E. The protective switch will thus be set to operate within the heating-up time t_E for the relevant temperature class. Embedded temperature detectors or thermistors are recommended to give the required signal to the tripping circuit during an emergency. Figure 7.16 illustrates the general requirements for an increased safety motor.

Table 7.6 Temperature class and limiting surface temperature with regard to gas ignition

Temperature class	*Ignition temperature (°C)*		*Limiting surface temperature, (°C)*
	Above	*Up to and including*	
T6	85	100	85
T5	100	135	100
T4	135	200	135
T3	200	300	200
T2	300	450	300
T1	450	—	450

As in IEC 60079-14

Heating-up time t_E

This is the time taken by the stator or the rotor, whichever is less, to reach the limiting temperature rise, as specified in Table 7.5, when the starting current I_{st} is passed through the stator windings after the motor has reached thermal equilibrium, under rated conditions. For increased safety motors, this time should not be less than 5 seconds (preferably 10 seconds or more).

7.13.3 Pressurized enclosures, type Ex. 'p'

These may be standard TEFC motors suitable for operating under an internal pressure of 0.05 kP_a or a pressure slightly above atmospheric. The minimum specified is 5 mm water-gauge above atmosphere. During operation this pressure is maintained with inert gas or air through an external closed circuit, preventing inflammable gases from reaching the motor's inner components. Before re-switching such a motor after a shutdown, inflammable gases which may have entered the enclosure must first be expelled. For pressurizing, two holes are normally drilled on the motor's end shields, one for entry and the other for exit of the air or gas. For large motors, a totally enclosed dual-circuit type enclosure is normally used so that the motor's interior is pressurized with air or nitrogen

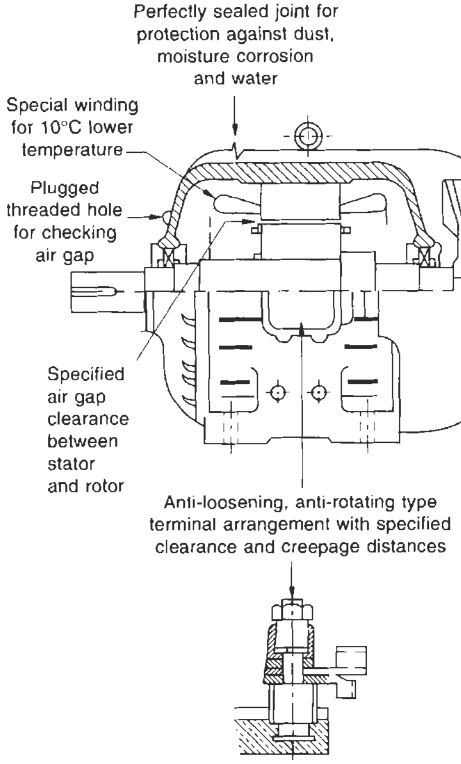

Figure 7.16 General requirements for an increased safety motor

to about 75 mm water-gauge above that of the atmosphere surrounding the enclosure. The enclosure is sealed and the leakage rate controlled to about 250 litres/min. Some of the basic safety features and devices are noted below. Such enclosures are recommended only when there are a number of these machines installed at the same location so that a common pressurizing and piping system may be employed to reduce costs on piping network and pressurizing equipment and its accessories, in addition to its regular maintenance.

Safety features

- The equipment is usually fitted with interlocks to ensure that if the internal pressure or flow rate of air or inert gas falls below a certain minimum level, the supply to the motor is cut off.
- Pressure-measuring device: This is provided for the operation of alarm or trip devices in the event the pressure within the casing falls below the permitted minimum.
- Safe-starting device: This is provided to ensure that no apparatus within the enclosure is energized until the initial atmosphere within the casing has been completely displaced.

7.14 Motors for Zone 2 locations

Locations falling within this category can employ motors that are more economical than the other types discussed above. IEC 60079-14 has defined the basic requirements for such enclosures which are obviously less stringent than the others. In addition to maintaining specified creepages and clearances between the rotating and the stationary parts, the following are the two main requirements specified for such enclosures:

1. They should produce no arcing during a start-up or run.
2. Surface temperature should not exceed the ignition temperature noted in Table 7.6 for a particular temperature class under any conditions of operation. There is no limit to the temperature rise to the permissible limits for a particular class of insulation of windings or other parts of the machine, except the limiting surface temperature as in Table 7.6. For such an application, a normal IP:55 enclosure may also be employed.

7.14.1 Non-sparking motors, type Ex. 'n'

A subsequent study of construction features of motors for Zone 2 locations, resulted in the development of non-sparking, type 'n' motors. The basic design consideration for such motors is similar to that of type 'e' motors but now there is no restriction in the limiting temperature, by 10°C, as in type 'e' motors. Frame sizes for these motors are generally the same as for general-purpose motors. Thus they tend to be smaller and less expensive than type 'e' motors for the same output.

7.15 Motors for mines, collieries and quarries

Special provisions are laid down in IEC 60079-0 and IEC 60079-1 for motors required for such locations in view of fluctuating degrees of humidity and temperature. Such locations are defined with a surface temperature limit of 150°C where coal dust can form a layer, or 450°C where it is not expected to form a layer. Otherwise, other details are generally the same as for flameproof motors type Ex 'd', according to IEC 60079-1. For variations in length of paths, gaps, widths, creepage and clearance distances, the reader should consult these Standards.

7.16 Intrinsically safe circuits, type Ex 'i'

IEC 60079-14 specifies two categories of intrinsically safe circuits and apparatus, i.e.

- Intrinsically safe category 'ia' as in IEC 60079-11 for installations in Zone 0, and

- Intrinsically safe category 'ib' for installations in Zones 1 and 2. The apparatus for this category must be of groups IIA, IIB, and IIC (IEC 60079-0).

The main stipulation for such systems is that they will not emit sparks in normal or fault conditions. This therefore restricts the use of only low-energy auxiliary and control circuits connecting instruments and devices at these locations. Such instruments and devices may record, sense or monitor certain operating parameters of machines or apparatus installed at these locations or the surrounding atmosphere itself, through temperature detectors (RTDs), instruments to measure humidity and pressure, and vibration detectors.

To comply with the requirement of intrinsic safety, all electrical circuits installed at such locations should be safe and must produce no spark or heat under normal or fault conditions, sufficient to cause ignition of the surrounding medium. The parameters of the circuit such as *V*, *I*, *R*, *L*, and *C*, which can release heat energies by I^2R, $\frac{1}{2}I^2L$ and $\frac{1}{2}CV^2$ have a recognisable bearing on the ignitability of an explosive atmosphere. For an inductive circuit, for instance, with a magnetic or solenoid coil, *V* and *L* would be the most potential parameters. During a fault condition the circuit may release high stored energy by heating the wires or any other part of the device to which it is connected. This energy may be sufficient to cause ignition of the surrounding atmosphere.

For the safety of these circuits, therefore, the main consideration is defined by the level of this energy, which should always be less than that required to ignite explosive gases, chemical vapour or volatile liquids in the surrounding atmosphere. Accordingly, minimum safe ignition currents (MICs) have been established by laboratory tests for different control voltages and *R*, *L*, and *C* of the circuit, and are the basis of testing the circuits of these devices and instruments at such locations to determine their compliance for safe installation. Since such circuits would be required for other zones and groups of gases also with different limiting temperatures, IEC 60079-11 would also apply to all such zones and groups of gases. The test requirements, however, would vary for different locations, as stipulated.

To contain the temperature of the electrical circuits within safe limits for a particular temperature class of the surroundings, the maximum current rating for a minimum size of a conductor is also stipulated in IEC 60079-11. The constructional requirements also stipulate the minimum clearances and creepage distances in air between the conducting parts of all the intrinsically safe electrical circuits.

7.17 Testing and certifying authorities

Installations categorized as hazardous locations, requiring these types of motors, would be regarded as critical applications, where stringent safety measures would be mandatory. Normally, the government of a country would authorize some agencies to independently grant approval for the use of this equipment at such locations. This is mandatory for the installation and operation of any electrical equipment in hazardous areas. These authorities may also specify construction requirements for equipment and issue regulations for its installation and operation.

In India, the Central Mining Research Institute, Dhanbad carries out this testing and provides the necessary certification for motors used in explosive atmospheres. But for approval of the equipment, whether it is worthy of use in a particular hazardous area, there are accredited agencies. Some of these are Directorate General Mines Safety, Dhanbad, Chief Controller of Explosives, Nagpur and Directorate General of Factory Advice Service and Labour Institute, Bombay.

7.18 Additional requirements for critical installations

A process industry, a refinery, a petrochemical, a fertilizer plant or a power station are installations that can be classified as critical. They cannot afford a breakdown during normal operation and would prefer to incorporate more safety features into the drive motors, even if these are expensive. These features can be one or more of the following.

7.18.1 Powerhouse treatment of insulation

Special insulation and coating of stator windings and overhangs are sometimes essential to ensure protection against tropical weather, fungus growth, moisture, oil abrasives, and acid and alkali fumes. Powerhouse treatment is one insulating process that can meet all these requirements (see Section 9.3).

7.18.2 Terminal boxes

It is recommended that the motor should have separate terminal boxes for the main supply and for the accessories such as space heaters, embedded temperature detectors, bearing temperature indicators and moisture detector terminals, etc. In LT motors, however, if it is not possible to provide a separate terminal box for these accessories, the main terminal box may be adequately spaced to segregate these terminals from the main terminals within the box.

In HT motors, however, these terminal boxes are always separate because two or more voltages (main and auxiliary). For main terminals there are normally two terminal boxes – one on one side of the stator to house the main three-phase stator terminals and the second on the other side to form the star point. These boxes are generally interchangeable to facilitate cable routing.

7.18.3 Phase segregation

It may be necessary to separate the live phases within the terminal box to eliminate any occurrence of a flashover or a short-circuit and a subsequent explosion. Such explosions may be very severe, depending upon the short-circuit level of the system and the surrounding atmosphere and may cause a damage to life and property. Such a provision is normally desirable for HT motors, where such incidents are more likely due to a higher short circuit level. For a terminal box with a less stringent design and adequate air and creepage distances between phases and phase and ground, capable of withstanding system faults, phase segregation may not be necessary. An explosion diaphragm will, however, be essential at a suitable location on the terminal box to allow the high-pressure gases to escape in the event of a fault inside the terminal box.

A normal phase segregation arrangement is shown in Figure 7.17. Each individual phase lead of incoming cable separates within a compound-filled separating chamber and terminates in the main terminal box with a separate enclosure for each phase, thus eliminating the possibility of flashover inside the terminal box. For more details see Section 28.2.2. A few designs of different types of terminal boxes are illustrated in Figure 7.18(a)–(c).

7.18.4 Applied voltage up to 200%

When a motor is energized there is an induced e.m.f. in the stator windings which takes time to decay to zero after it is switched OFF ($\tau = L/R$, an analogue to capacitive discharge, Section 25.7). In ordinary switching operations, the sequential delay may be sufficiently long for the induced e.m.f. to persist and affect the motor's performance. But, a system that has an emergency source of supply, through an automatic changeover scheme, may have a changeover time of just a few seconds on failure of the main supply. This period sometimes can be too short for the motor-induced e.m.f. to decay to a safe level. As a consequence, the impressed voltage of the other system, at the instant of closing, may fall phase apart with the motor's own induced e.m.f., and the motor windings may be subject to a momentary overvoltage. The effect of such changeovers is felt up to 200% of the rated voltage of the motor windings, and may occur when the applied bus voltage and the residual motor voltage falls phase apart by 180°. This voltage may cause a flashover inside the terminal box if the motor terminals are not adequately spaced, and damage the inter-turn insulation and the overhangs of the motor windings etc. To withstand such overvoltages that may result in higher dielectric and electrodynamic stresses the overhangs can be treated by an additional coat of varnish, and a tight binding. A similar treatment is desirable for the slot coils, as well as liberal spacings and creepage distances between the phases and the ground inside the terminal box. In addition the motor and the driven equipment shafts may also be braced to withstand transient torques. This is the case when the interrupter remains closed during the changeover period. If it is not closed the changeover may also cause switching surges in HT motors (Section 17.7.2(ii)).

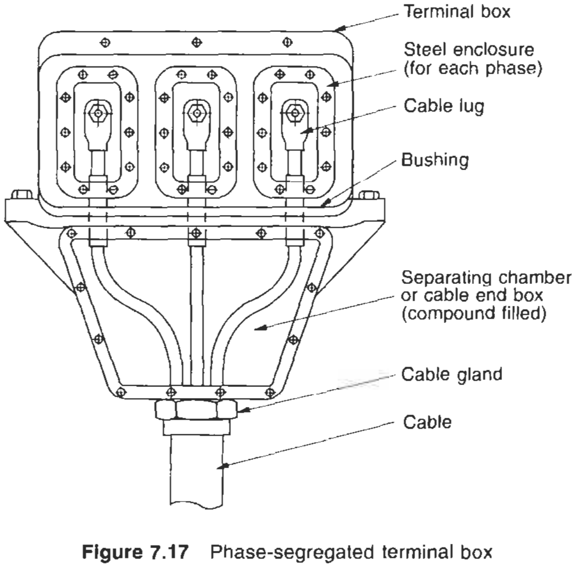

Figure 7.17 Phase-segregated terminal box

7.18.5 Re-acceleration of motors

It may be essential for certain critical process drives to have an autostarting feature, to re-accelerate them after a momentary main power failure. This is required to save the process and the downtime, and prevent re-switching of these drives on a rapid restoration of power. This scheme can also be useful for critical processes where a restart of a drive may take a long time due to its torque characteristics or process requirements and resulting in a long downtime. Such a scheme can achieve faster stabilization of the process by retaining the drive in motion, and picking it up quickly on a rapid restoration of power, as in polypropylene plants and gas crackers. A paper mill, for instance, would require the whole length of paper to be removed from its drying cylinders if the mill is to be re-started after a shutdown. This is a waste of paper, in addition to a longer downtime.

Re-acceleration can be achieved by introducing an OFF-delay timer T_1 (Figure 7.19) into the control circuits of all these drives with a time setting of, say, 0–60 seconds, so that the contactors of the critical drives restart automatically after restoration of power within the set period. The time setting, however, has to be such that the drives are still in motion at speeds so that the process can be restored. Figure 7.19 illustrates a typical scheme. This can also be achieved by placing a capacitor across the operating coil of the main contactor which can provide a time delay up to 1–4 seconds by holding the contactor. Contactors with built-in capacitors are available, and are called OFF-delay release contactors. Such a short-duration hold-on feature may be adequate when the system is required to hold without a trip against momentary heavy voltage dips, arising from system disturbances or simultaneous switching of large motors or during an auto-manual bus transfer.

Re-acceleration may be restricted to only critical drives to avoid a high switching inrush current on resumption of power. This can be achieved by grouping all these drives in two groups, one with a delay of T_1 and the other through an ON-delay timer T_2. Thus extending a progressive time delay so that each subsequent group of drives accelerates only after the previous group is switched, to avoid simultaneous switching of all motors. Figure 7.20 illustrates a typical scheme.

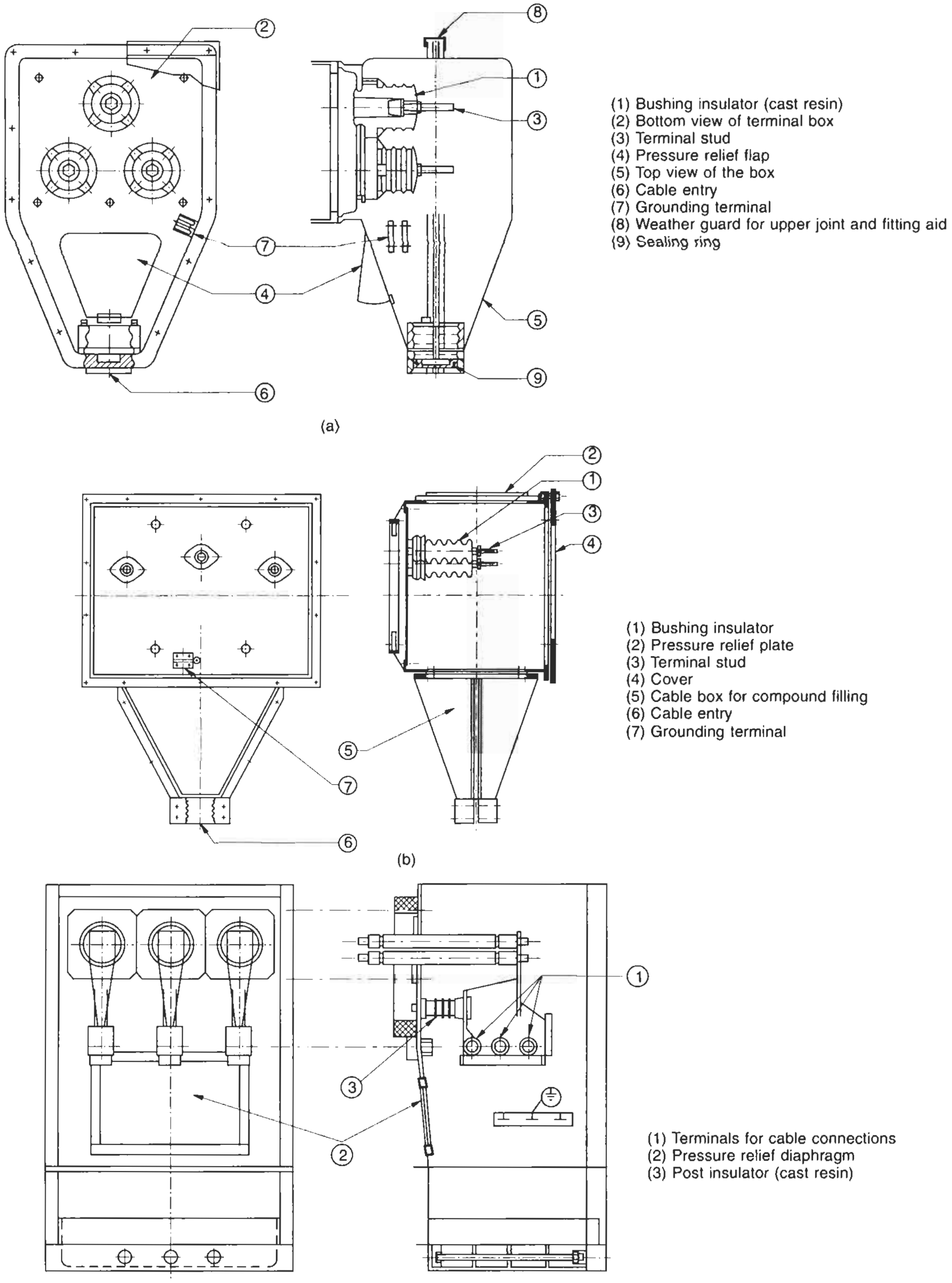

(1) Bushing insulator (cast resin)
(2) Bottom view of terminal box
(3) Terminal stud
(4) Pressure relief flap
(5) Top view of the box
(6) Cable entry
(7) Grounding terminal
(8) Weather guard for upper joint and fitting aid
(9) Sealing ring

(a)

(1) Bushing insulator
(2) Pressure relief plate
(3) Terminal stud
(4) Cover
(5) Cable box for compound filling
(6) Cable entry
(7) Grounding terminal

(b)

(1) Terminals for cable connections
(2) Pressure relief diaphragm
(3) Post insulator (cast resin)

(c)

Note

The terminal boxes upto a fault level of 350 MVA for 5 cycles at 6.6 kV are generally non-segregated and beyond 350 MVA segregated type.

Figure 7.18 Typical designs of a few HT terminal boxes

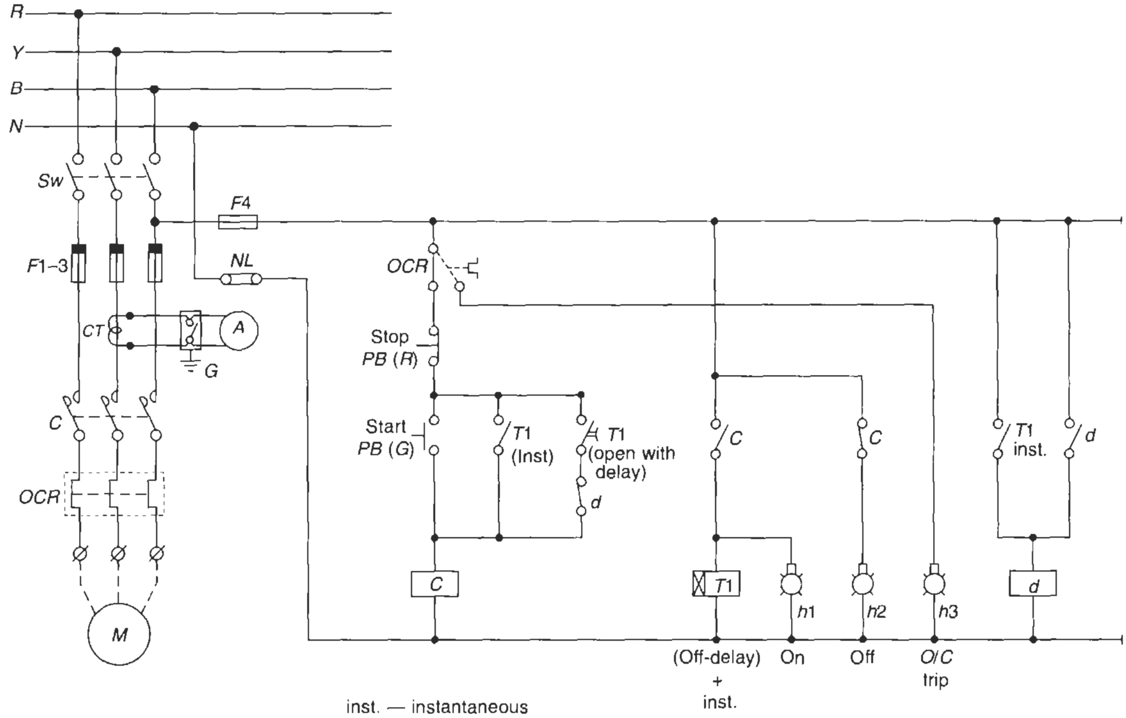

inst. — instantaneous

Figure 7.19 A typical scheme illustrating re-acceleration of a critical motor

7.19 Motors for thermal power station auxiliaries

These applications have considerably more stringent performance requirements than any other application. Circulating water pumps, boiler feed pumps, forced-draught (FD) and induced-draught (ID) fans, pulverizers (ball mills) and condensate pumps are components in a thermal power station that may require extra safety in a standard motor to make it able to fulfil these requirements and withstand abnormal service conditions and system disturbances. Abnormal operating conditions may be one or more of the following:

- High ambient temperature
- High humidity
- Dust-laden (coal dust and fly ash) environment
- Long continuous operation
- High fault levels
- Overvoltages, caused by a fast bus transfer
- Re-acceleration in some drives
- Voltage surges, caused by system disturbances or switching operations (for HT motors).

In a large power station, connected to a transmission network through a power grid, system disturbances are a common feature. For details see Section 17.5.

With a view to standardizing the basic requirements of an electric motor for essential services, electricity authorities may sometimes stipulate norms and outline their basic minimum requirements for the benefit of users and the manufacturers. In India, for instance, the Central Electricity Authority (CEA) publishes manuals based on the actual feedback obtained from various thermal sites, electricity companies, leading consultants and the NTPC (National Thermal Power Corporation), in addition to motor manufacturers. Below are extracts from these manuals:

1 Motors must be generally squirrel cage type and not slip-ring.
2 The preferred ratings for motors above 110–4000 kW, must follow the 'Renard Series', R–20, according to ISO 3, as shown in Table 1.1(a).
3 The preferred synchronous speeds is as shown in Table 7.7.
4 The enclosure and type of cooling is as shown in Table 7.8.
5 Space heaters: motors above 30 kW must be provided with anti-condensation space heaters suitable for 240 V 50 Hz (or 60 Hz), a.c. supply. The space heaters must switch ON automatically when the motor is out of service. Motors of 30 kW and below must be suitable for connection to a 240 V, 50 Hz (or 60 Hz) a.c. supply. Here also the windings must be connected automatically to the 240 V supply when the motor is out of service.
6 Terminals and terminal box
    - HT motors must be provided with phase-segregated terminal boxes as illustrated in Figure 7.17.

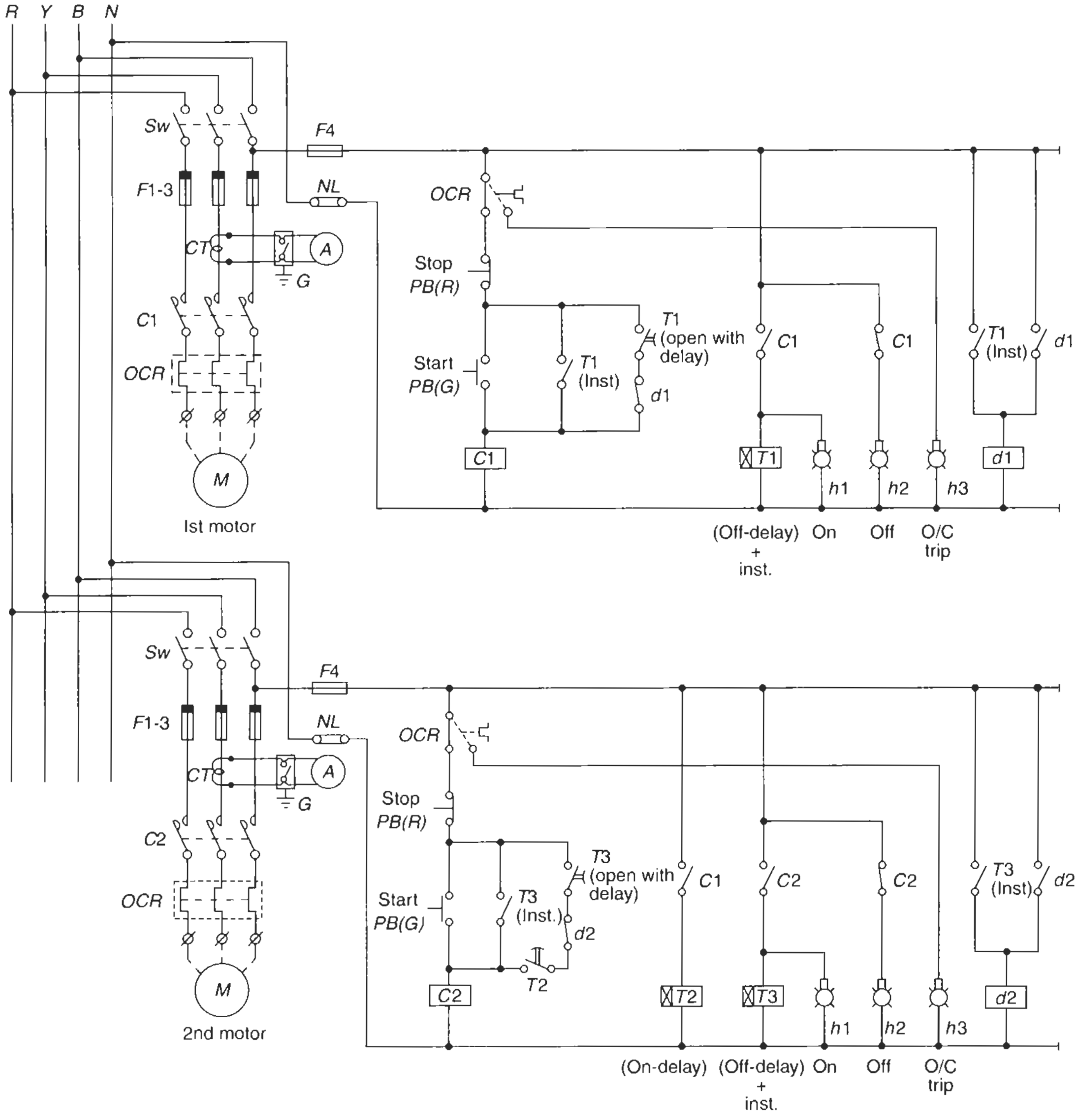

inst. – instantaneous

Figure 7.20 A typical scheme illustrating re-acceleration of two motors (or two groups of motors) with a time gap

Table 7.7 Preferred speeds for thermal power station auxiliaries

Auxiliary	*Synchronous speed (r.p.m.)*
Induced-draught fan (ID fan)	750, 1000
Forced-draught fan (FD fan)	1000, 1500
Primary air fan (PA fan)	1500
Ball mill (coal crusher)	1000
Vapour fan	1000, 1500
Boiler feed pump (BFP)	1500, 3000
Condensate pump	1000, 1500
Circulating water pump (CW pump)	375, 429, 500

Table 7.8 Recommended enclosures and type of cooling for power station auxiliaries

Enclosure	*Type of cooling as in IEC 60034-6*
1 TEFC	IC 0141
2 TETV	IC 0151
3 CACA	IC 0161
4 CACW	ICW 37A 81 or ICW 37A 91

- In HT motors the terminal box for space heaters and embedded temperature detectors must be separate from the main terminal box.
- The terminal box must be capable of withstanding the system fault current for at least 0.25 second.
- The terminal box must be suitable for being turned through 180°, for bottom or top cable entry.
- The terminal box must have the same degree of protection as the motor.
- For large motors, 1000 kW and above, if they are provided with star windings the three neutral end leads must be connected to a separate terminal box to enable mounting of CTs for differential protection. The neutral terminal box need not be phase segregated.

7 Performance

- Motors must be designed for an ambient temperature of 50°C.
- HT motors must be generally wound with class F insulation and the temperature rise should not exceed the prescribed limits of class B insulation. LT motors up to 250 kW, however, can be wound with class B insulation.
- The performance of the motors must conform to IEC 60034-12.

8 Voltage and frequency variations

- During start-up, the motors must be suitable for accelerating to 80% of the rated voltage.
- Motors must run at full h.p. under the following conditions:
  Variation in frequency: ±5%
  Variation in voltage: ±10%
  Combined variation in frequency and voltage: ±10%
- Motors must not stall due to a momentary dip in voltage up to 70% of the rated voltage, i.e. T_{po} to be more than $T_r/(0.625)^2$, i.e. 256% for a 1500 r.p.m. motor and $T_r/(0.605)^2$, i.e. 273% for a 1000 r.p.m. motor and less, as shown in Table 1.5.
- Motors must run satisfactorily for 5 minutes at a supply voltage of 75% of the rated value.

Note This operating condition is, however, not specific for it does not stipulate the frequency of occurrence of such a contingency. It may be assumed that this condition will not occur more than once before thermal stability is reached. See also Section 3.7. In normal practice a motor meeting the other operating conditions noted above in all likelihood will satisfy this requirement also without needing yet another derating. See also Example 7.1.

9 Starting current

- On DOL the I_{st} must not exceed 600% of I_r but for boiler feed pumps it must be limited to 450% of I_r, subject to the tolerance stipulated in IEC 60034-1.
- To determine the starting current, when the test is conducted at a reduced voltage $(1/\sqrt{3}\,V_r)$, allowance must be made for the saturation effect while estimating the value of I_{st} at the rated voltage. See also Section 1.6.2(A) also (the important note on starting torque).

Note At full voltage, the stator core will offer a lower impedance, because of the saturation effect, than at a reduced voltage. The I_{st} at full voltage therefore would be slightly higher than that calculated from the starting current, measured at a reduced voltage. Hence the allowance for this. See also Figure 27.2(b).

10 Frequency of start: The HT motors must be suitable for two starts in quick succession when the motor is hot or three equally spread starts in an hour (not to be repeated in the second successive hour).

11 Stresses during a fast bus transfer: A fast bus transfer between the unit and station supplies is an essential feature in a power station to maintain an uninterrupted power supply to the unit and station auxiliary services (Figure 13.21). The changeover may be as fast as three or four cycles which is adequate to break before make in the modern interrupting devices and hence is safe to adopt. The motors should, however, be suitable of withstanding excessive voltages on account of this up to 150% of the rated voltage for at least one second during such bus transfers.

Note The time gap between a fast bus transfer is so small that it will not permit the various drives to slow down sufficiently to affect their performance or the system if they are made to re-accelerate (re-energize) on restoration of power.

In a fast bus transfer scheme, the phase angle is monitored through special relays (Section 16.11) which initiate the changeover, so that the self-induced e.m.f. of the motor does not slip too far in the phase angle, $\Delta\theta$, between the two voltages and the motor is not exposed to excessive overvoltages. At higher $\Delta\theta$ the relays will block the transfer and protect the system from excessive voltages. If the fast bus transfer fails to change over automatically, slow changeover takes place and the motor-induced e.m.f. is allowed to decay by up to 40–20% before the bus transfer takes place. For insulating and bracing the windings, such bus transfers may occur up to 500 times in the total lifespan of the motor.

12 Starting time and locked rotor withstand time

- For motors with a starting time of up to 20 seconds, with the minimum permissible applied voltage (80%), the locked rotor withstand time under hot conditions at rated voltage must be at least 2.5 seconds more than the starting time.
- For motors with a starting time of more than 20 seconds but within 45 seconds, at the minimum permissible applied voltage (80%), the locked rotor withstand time, under hot conditions at rated voltage, must be at least 5 seconds more than the starting time.

13 Bearings: The bearings will preferably have an arrangement for self-lubrication.

14 Bearings must be insulated wherever necessary, to prevent them from shaft currents (Section 10.4.5).

15 Over-speed: Motors will be designed to withstand 120% of N_r for at least 2 minutes without any mechanical damage.

16 Noise level: Motors must conform to the requirements of IEC 60034-9. A safe sound pressure level for a human body to perform better, during an 8-hour

Table 7.9 Sources emitting sound and their likely loudness level

Noise level (dB)	*Sound source*
0	Threshold of hearing
20	Rustling sound, whisper, homes (quiet places)
40	Motor cars
60	Normal conversation
80	Street traffic
100	Light engineering workshop
120	Thunder/lightning

working day, without undue fatigue, is considered at 90 dB as noted in Section 7.9. For recommended values of sound level for airborne noise, refer to the IEC publication. See also Table 7.9 for sources in day-to-day life that emit noise and their likely noise levels.

17 Temperature detectors
- HT motors must have a minimum six numbers of resistance temperature detectors (RTDs) (See section 12.8).
- All bearings of HT motors must be provided with embedded temperature detectors (ETDs).

18 Polarization index test
- Motors rated 7500 kW and less must be considered suitable for dielectric tests or operation only when the polarization index or the value of the insulation resistance (at 40°C) is at least the minimum recommended values.
- Motors rated above 7500 kW must have both the polarization index and the insulation resistance above the minimum recommended values.
- The recommended minimum value of the polarization index for motors having class B or F insulation must be 2 when determined according to IEC 60034-18-1.

Note The above recommendations are those of an electricity authority of one country and may vary for other countries.

7.20 Selection of a special-purpose motor

Example 7.1
Select a suitable motor for a ball mill with the following load details:

kW = 450
r.p.m. = 400 through V-belts
Starting torque = 40% rising to 100% at full load (Figure 7.21).
GD^2 of rotating masses = 10 000 kgm^2

Supply system:

Voltage = 3.3 kV ± 10%
Frequency = 50 Hz ± 3%

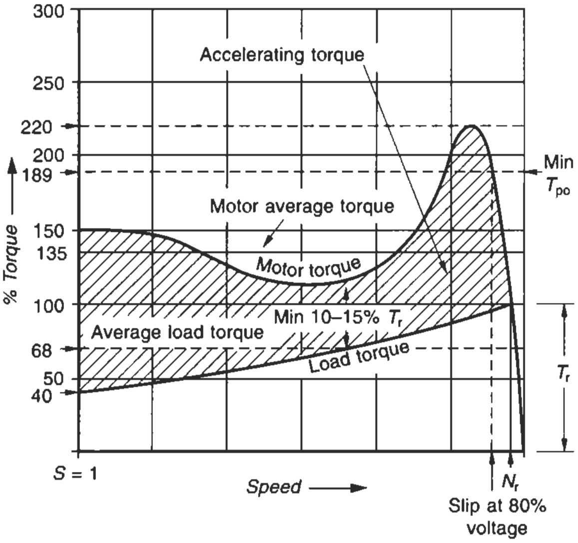

Figure 7.21 Determining the accelerating torque

Combined voltage and frequency variation not to exceed ± 10%. Voltage may fall to 80% during running for about 20 minutes and can be assumed to occur once an hour. Also likely overloading by 20% for the same period in the same duration. Only one contingency occurring at a time. The motor should also be capable of running, without stalling if the voltage drops to 70% momentarily, say, for 25 cycles.

Ambient temperature = 50°C
Permissible starting = DOL in a squirrel cage or rheostat in a slip-ring motor
Desired starts = six equally spread starts per hour and three consecutive hot starts not to be repeated for one hour
Service factor = 1.1, alternatively 1.15

Solution

Deratings
(a) For ±10% voltage and frequency variation: 90% (Section 1.6.2(C)).
(b) For 50°C ambient temperature: 92% (Section 1.6.2).
(c) At 80% voltage, the full load torque of the motor will drop to 0.73^2, i.e. 0.53 times the rated torque, as shown in Table 1.5. Also the motor will tend to stall unless adequate torque is available on the motor torque curve, i.e. T_{PO} must not be less than 1/0.53 or 189%. The motor will thus start to drop its speed until it reaches a point where a motor torque of 189% of 450 kW is available. The motor will now operate at a higher slip, causing higher slip losses. Assuming the mill torque at the reduced speed to be the same as at 100% speed, then the kW requirement of the mill

$$\text{kW} \propto N \cdot T$$

This will also decrease in the same proportion as the increase in slip. For a rough estimate, we may also ignore the higher slip losses for an equal reduction in the required kW. However, due to the lower voltage the motor current will increase proportionately and will be $I_r/0.8$ or $1.25I_r$. The motor will thus run overloaded by 25% for 20 minutes which is likely, and not more than once an hour. The frequency of occurrence must be known. A higher derating may be necessary if such a condition is frequent.
(d) Overloading of 20% for 20 minutes per hour need not be

considered in view of condition (*c*) which is more severe. Therefore, average loading on motor in one-hour cycle

$$= \sqrt{\frac{(1.25\ I_r)^2 \times 20 + I_r^2 \times 40}{60}}$$

$$= I_r \sqrt{1.187}$$

$$\simeq 1.09 I_r$$

i.e. the rating of the motor should be higher by 9% to account for this stipulation.

Note Normally, the heating-up time constant τ for an HT motor varies between 0.9 to 1.5 hours, i.e. heating-up time under normal running condition from 2.5 to 4.0 hours approximately. In one hour, therefore, the motor will not reach its thermal equilibrium and the equivalent rating as determined above is in order. One should not consider a cycle longer than heating time, which may give incongruous results:

$\therefore$ kW to be chosen, considering all deratings

$$= \frac{450 \times 1.09}{0.92 \times 0.90}$$

$$\simeq 600 \text{ kW}$$

A 1000 r.p.m. 600 kW motor should be an economical choice.

(e) To meet the condition at 70% voltage, the motor should have a T_{PO} of more than 189% and should be minimum $1/(0.605)^2$ (Table 1.5) or 273% of 450 kW or 204.75% of 600 kW, so that the motor does not stall.

(f) To consider the service factor (SF) the motor should have a continuous reserve capacity as may be desired, for example for a SF of 1.15, a motor of at least 1.15 × 450, i.e. a 517.5 kW rating must be required. We have already selected a motor of 600 kW, therefore this factor need not be considered again. Moreover, too large a motor than the load requires would make it operate underloaded and diminish its operating efficiency and p.f., which is a drain on the usable energy and is not desirable. See also Sections 23.3 and 7.10.

Checking the suitability of a squirrel cage motor

Assume that the motor is designed for an average speed-up torque of 135% and T_{PO} of 220% (Figure 7.21). If the average load torque is assumed as 68%, the average accelerating torque, T_a, available will be 67% on DOL starting, i.e.

$$T_a = \frac{450 \times 974}{980} \times 0.67 \text{ mkg (considering } N_r = 980 \text{ r.p.m.)}$$

$$\simeq 300 \text{ mkg}$$

Say, the $GD_M^2 = 200 \text{ kgm}^2$

and $GD_L^2 = 10000 \left(\frac{400}{980}\right)^2$ (at motor speed)

$$\simeq 1666 \text{ kgm}^2$$

$\therefore$ $GD_T^2 = 1866 \text{ kgm}^2$

and starting time,

$$t_s = \frac{1866 \times 980}{375 \times 300}$$

$$\simeq 16.25 \text{ seconds}$$

Considering the permissible tolerances in the declared torque values, the safer starting time should be taken as roughly 10–15% more than the calculated value. Therefore, consider the safe starting time as 16.25 × 1.15, i.e. 19.0 seconds. For a single start under hot conditions the motor should have a minimum thermal withstand time of 19.0 seconds, and for three consecutive starts, a minimum 57.0 seconds, which, for this size of motor, may not be practicable in view of design economics. For this application, therefore, a squirrel cage motor is not recommended, unless a fluid coupling is employed to transmit the power.

Corollary

The use of a squirrel cage motor is, however, inevitable as discussed earlier particularly for a process plant or a power house application, where downtime for maintenance of a slip-ring motor is unwelcome, or a chemical plant or contaminated locations, where the application of a slip-ring motor is prohibitive. To meet such load requirements with a squirrel cage motor, the use of fluid couplings to start the motor lightly and reduce starting time, is quite common and economical, as discussed in Chapter 8, and must be adopted in the above case.

Let us use a fluid coupling and start the motor lightly, similar to Figure 8.3. The revised accelerating torque and approximate clutching sequence of the coupling is illustrated in Figure 7.22.

1 Consider the clutching of the coupling with the load at roughly $0.8N_r$, by which time the motor would be operating near its T_{po} region

$$\therefore N_{r_1} = 0.8N_r$$

$$= 800 \text{ r.p.m.}$$

Considering an average coupling opposing torque as roughly $0.4T_r$ and average motor torque as $1.35T_r$, between 0 to 0.8 N_r, the exact torque can be calculated by measuring the torque ordinates at various speeds and then calculating the average. See Example 2.4 for more details.

$$\therefore T_{a1} = 1.35T_r - 0.4T_r$$

$$= 0.95T_r$$

$$= \frac{450 \times 974}{980} \times 0.95$$

$$= 424.88 \text{ mkg}$$

GD^2 during a light start, considering the GD_c^2 of the coupling (impeller) as equal to the motor (the exact value should be obtained from the manufacturer).

$$\therefore \quad GD_T^2 = 200 + 200$$

$$= 400 \text{ kgm}^2$$

and t_{s1} up to $0.8N_r = \frac{400 \times 800}{375 \times 424.88}$

$$= 2.01 \text{ seconds}$$

2 The coupling average accelerating torque after it has

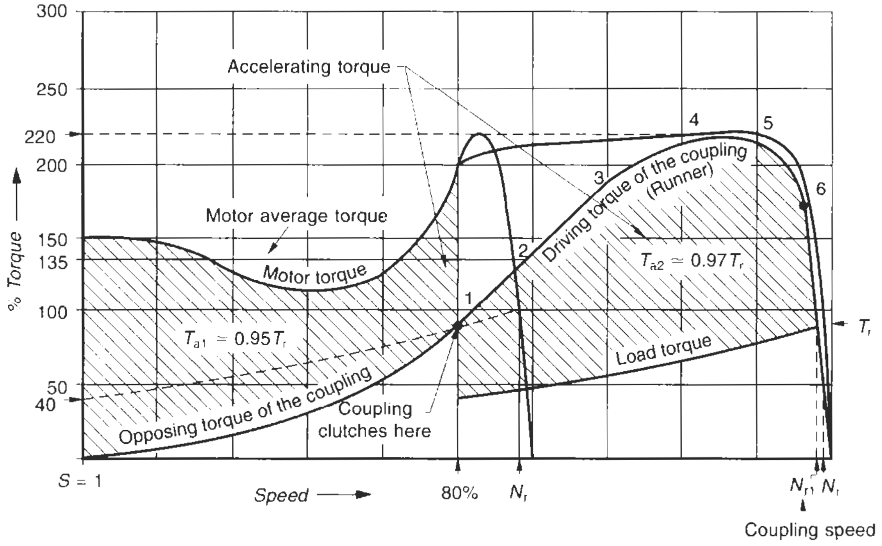

Figure 7.22 Accelerating torque with the use of fluid coupling

engaged with load, up to N_r, $T_{r2} \cong 1.65T_r$

(by calculating average ordinates at points 1 to 6

$$= \tfrac{1}{6}[80 + 135 + 185 + 215 + 215 + \tfrac{1}{2}(215 + 100)]$$

$$= 165\%$$

Load average torque $\cong 0.68T_r$

$$\therefore \quad T_{a2} = 1.65T_r - 0.68T_r$$

$$= 0.97T_r = \frac{450 \times 974 \times 0.97}{980}$$

$$= 433.33 \text{ mkg}$$

$$\text{and} \quad GD_T^2 = GD_M^2 + GD_C^2 + GD_L^2$$

$$= 200 + 200 + 1666$$

$$= 2066 \text{ kgm}^2$$

$$N_{r2} = 980 - 800$$

$$= 180 \text{ r.p.m.}$$

$$\therefore t_{s2} \text{ from } 0.8N_r \text{ to } N_r = \frac{2066 \times 180}{375 \times 433.83}$$

(The actual speed will be slightly less due to coupling slip)

$$= 2.28 \text{ seconds}$$

$$\therefore \quad \text{Total accelerating time} = 2.01 + 2.28$$

$$= 4.29 \text{ seconds}$$

$$\text{With permissible tolerance} = 1.15 \times 4.29$$

$$= 4.93 \text{ seconds}$$

For three consecutive starts, the motor must possess a minimum thermal withstand time of about 14.8 seconds which will now be possible with a standard squirrel cage motor. The motor starting torque requirement can also be relaxed with the use of flexible couplings, if this can economize on the cost of the motor.

Checking the suitability of a slip-ring motor

With the same pull-out torque as above, if we select a slip-ring motor and arrange the starter to develop an average pick-up torque of 200%, the available accelerating torque will be (200 – 68) = 132%

$$\text{i.e.} \quad \frac{450 \times 974}{980} \times 1.32$$

$$\text{or} \quad 590 \text{ mkg and starting time } t_s = \frac{1866 \times 980}{375 \times 590}$$

or 8.26 seconds.

Assuming a safe start time of 8.26 × 1.15, i.e. 9.5 seconds, a motor with a safe hot stall time of 30 seconds will be adequate to withstand three consecutive hot starts, since 3 × 9.5 < 30 seconds.

Note In a slip-ring motor I_{st} is much less compared to a squirrel cage motor, say 200–300% I_r, and therefore a hot thermal withstand time of only 6 to 9 seconds should be quite safe for such a duty, e.g.

$$\text{Heating, } H \propto I_{r1}^2 \cdot R \cdot t_1 \propto I_{r2}^2 \cdot R \cdot t_2$$

$$\text{or} \quad t_2 = \frac{I_{r1}^2}{I_r^2} \cdot t_1$$

Since the thermal withstand time refers to locked rotor conditions and normally corresponds to 600 to 700% I_r.

∴ at 300% I_{st}, the equivalent thermal withstand time, considering the hot thermal withstand time at 600% starting current as 8 seconds will be

$$t_2 = \left[\frac{600}{300}\right]^2 \times 8$$

$$= 32 \text{ seconds}$$

To determine the number of equally spread starts and stops, heating and cooling curves of the motor should be available and the manufacturer may be consulted.

The above exercise is only for a general guidance. In such cases, the manufacturer should be consulted who may offer a better and more economical design.

Relevant Standards

IEC	*Title*	*IS*	*BS*	*ISO*
60034-1/1996	Rotating electrical machines Rating and performance	4722/1992 8151/1990	BS EN 60034-1/1995 BS 5000-99/1986	–
60034-3/1988	Rotating electrical machines Specific requirements for turbine type synchronous machines	–	BS EN 60034-3/1996	–
60034-5/1991	Rotating electrical machines Classification of degrees of protection provided by enclosures for rotating machinery	4691/1985	BS 4999-105/1988	–
60034-6/1991	Rotating electrical machines Methods of cooling (IC Code)	6362/1995	BS EN 60034-6/1994	–
60034-7-1992	Rotating electrical machines Classification of types of constructions and mounting arrangements (IM Code)	2253/1974	BS EN 60034-7/1993	–
60034-9/1997	Rotating electrical machines Noise limits	12065/1987	BS EN 60034-9/1998	–
60034-12/1980	Rotating electrical machines Starting performance of single-speed three-phase cage induction motors for voltages up to and including 660 V	8789/1996	BS EN : 60034-12/1996	–
	For agricultural application	7538/1996	–	–
60034-14/1996	Rotating electrical machines – mechanical vibration of certain machines with shaft heights 56 mm and above. Measurement, evaluation and limits of vibration	–	BS 4999-142/1987	2373
60034-18-1/1992	Rotating electrical machines. Functional evaluation of insulation systems. General guidelines	7816/1991	BS EN 60034-18-1/1994	–
60072-1/1991	Dimensions and output series for rotating electrical machines. Frame number 56 to 400 and Flange number 55 to 1080	1231/1991	BS 5000-10/1989 BS 4999-141/1987	
60072-2/1991	Dimensions and output series for rotating electrical machines. Frame number 355 to 1000 and Flange number 1180 to 2360	1231/1991	BS 5000-10/1989 BS 4999-103/1987	
60072-3/1994	Dimensions and output series for rotating electrical machines. Small built-in machines. Flange number BF 10 to BF 50	996/1991	BS 5000-11/1989	
60079-0/1998	Electrical apparatus for explosive gas atmospheres General requirements	2148/1993	BS 5501-1/1977, BS 5000-17/1986	
60079-1/1990	Construction and verification test of flameproof enclosures of electrical apparatus	2148/1993	BS 4683-2/1993 BS 5501-5/1997	–
60079-2/1983	Electrical apparatus. Type 'p'	7389/1991	BS EN 50016/1996	
60079-7/1990	Electrical apparatus for explosive gas atmospheres Increased safety motors, type 'e'. General requirements	6381/1991	BS 5501-6/1977 BS 5000-15/1985	–
60079-10/1995	Electrical apparatus for explosive gas atmospheres Classification of hazardous areas	5572/1994	BS EN 60079-10/1996	
60079-11/1991	Specifications for intrinsically safe electrical system 'i'	3682/1991	BS 5501-7/1977 BS 5501-9/1982	
60079-12/1978	General recommendations on the selection of the appropriate group of electrical apparatus based on safe gaps and minimum igniting currents		BS 5345-1/1989	
60079-14/1996	Electrical apparatus for explosive gas atmospheres Electrical installations in hazardous areas (other than mines)	5571/1991	BS EN : 60079-14/1997	–

IEC	*Title*	*IS*	*BS*	*ISO*
60079-15/1987	Electrical apparatus with type of protection 'N'	9628/1988 8289/1991	BS 6941/1988 BS 5000-16/1997	
60079-17/1996	Inspection and maintenance of electrical installations in hazardous areas (other than mines)		BS EN 60079-17/1997	
60079-19/1993	Repair and overhaul for apparatus used in explosive atmospheres (other than mines or explosives)			
60079-20/1996	Data for flammable gases and vapours for electrical apparatus			
60317(0-47)	Requirements and dimensions for round copper wire	–	BS EN 60317 (0-47)	–
60851/1996	Winding wires for submersible motors	8783/1995	BS EN 60851/1998	–
–	Textile motors: Part 1 Loom motors	2972-I 1990	–	–
–	Textile motors: Part 2 Card motors	2972-II 1990	–	–
–	Textile motors: Part 3 Spinning frame motors	2972-IIi 1990	–	–
–	Motors for submersible pump sets	9283/1995	–	–
–	Submersible pump sets	8034/1989		–
–	Specification for general purpose electrical power driven winches for lifting and hauling	9507/1995	–	–
–	Code of practice for safe use of cranes	3177/1990	BS 5744/1979	–
–	Specification for power driven overhead travelling cranes, semi-goliath and goliath cranes for general use	4137/1995	BS 466/1984	4301-1 8306
–	Specification for power-driven mobile cranes	4573/1990	BS 1757/1986	–
–	Specification for electrically driven jib cranes mounted on a high pedestal or portal carriage	4594/1995	BS 2452/1954	–
–	Specification for high voltage busbars and busbar connections	8084/1992	BS 159/1992	–

Related US standards ANSI/NEMA and IEEE

NEMA/MG 1/1993	Motors and generators ratings, construction, testing and performance
NEMA/MG 2/1989	Safety Standards (enclosures) for construction and guide for selection, installation and use of rotating machines
NEMA/MG 3/1990	Sound level prediction for insulated rotating electrical machines
NEMA/MG 10/1994	Energy management guide for selection and use of three phase motors
NEMA/C50.41/1982	Polyphase induction motors for power generating stations

Notes

1 In the tables of relevant Standards in this book while the latest editions of the standards are provided, it is possible that revised editions have become available. With the advances of technology and/or its application, the updating of standards is a continuous process by different standards organizations. It is therefore advisable that for more authentic references, readers should consult the relevant organizations for the latest version of a standard.

2 Some of the BS or IS standards mentioned against IEC may not be identical.

3 The year noted against each standard may also refer to the year of its last amendment and not necessarily the year of publication.

List of formulae used

Determining the size of motor

For lifting and hoisting

$$P_\mathrm{h} = \frac{F \cdot V}{102 \cdot \eta} \text{ kW} \qquad (7.1)$$

F = useful load in kgf

V = lifting speed in m/s

η = efficiency of the mechanism

For traverse

$$P_\mathrm{t} = \frac{1.027 \cdot T_\mathrm{max} \cdot N_\mathrm{r}}{1000 \cdot \eta} \text{ kW} \qquad (7.2)$$

$\mathrm{T_{max}}$ = maximum torque

η = efficiency of the whole mechanism for traversing

Further reading

1 Anderson, H.H., *Submersible Pumps and their Application*, The Trade and Technical Press Ltd, Morden, Surrey.

2 Battiwala, N., 'Centrifugal motors for the sugar industry,' *Siemens Circuit*, **III**, No. 4, July (1968).

3 Brown Boveri & CIE, *Explosion Protection Manual*, Aktiengesellschaft Mannheim Verlag, W. Giradet, Essen, Germany.

4 Central Board of Irrigation and Central Electricity Authority, *Standardisation of Motors for Thermal Power Station Auxiliaries in India*, Power Publication No. 140, March (1983).

5 *The Chemical Times*, 'Design and application of electric motors in explosive atmosphere', **IV**, No. 15, April (1977).

6 Ghosh, S.N., 'Electric motors for hazardous environments', *Siemens Circuit*, **VI**, No. 4, July (1971).

7 Ghosh, S.N., 'Electric motors for special applications', *Siemens Circuit*, **VII**, No. 4, July (1972).

8 Ghosh, S.N., 'Induction motors for auxiliary drive for thermal power stations,' *Siemens Circuit*, **XVII**, No. 2, April (1982).

9 Jain, S.K., 'Sugar centrifuge motors', *Siemens Circuit*, **VI**, No. 2, Jan. (1971).

10 Singhvi, N., A paper on 'Motors for hazardous applications', Crompton Greaves Ltd, India.

8

Transmission of Load and Suitability of Bearings

Contents

The power from the motor shaft to the driven shaft can be transmitted in many ways, depending upon the power and load application. In this chapter we deal with the most common types of driving systems, their influence on the starting characteristics of the motor and their effect on bearings.

8.1 Direct or rigid couplings

These are suitable for smaller ratings only because of their weight, which also includes the weight of the load which falls directly onto the motor and its shaft. The driven equipment, such as a mono block pump is mounted directly on the motor shaft (Figure (8.1). Such couplings offer the advantage of design simplicity but do not allow for any misalignment. They are used for low-speed applications or where only marginal misalignment is anticipated.

8.2 Flexible couplings

The load is now transmitted through ordinary couplings, one half mounted on the motor shaft and the other half on the driven shaft. They are bolted together with a rubber pad between the two. The motor and the driven machine are mounted on a common bed (Figure 8.2). They are now able to provide margin for misalignment of the two shaft ends and thus extend more flexibility.

8.3 Delayed action couplings

In the above two types of couplings the transmission of torque is linear, but now the driving torque rises as the square of the input speed ($T \propto N^2$). These couplings facilitate engagement of the motor shaft with the driven shaft after a pause, by when the motor nearly picks up its rated speed. They are of two types:

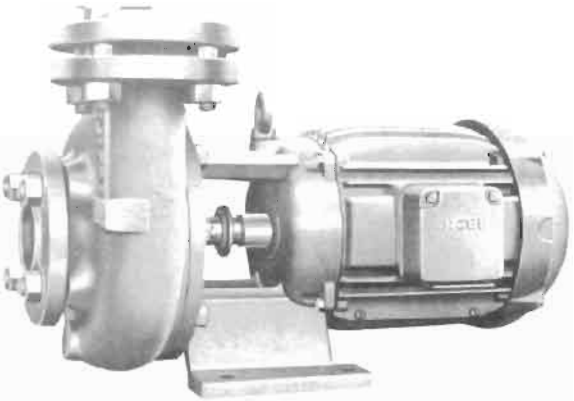

Figure 8.1 Direct coupling (mono block pump) (Courtesy: NGEF Ltd.)

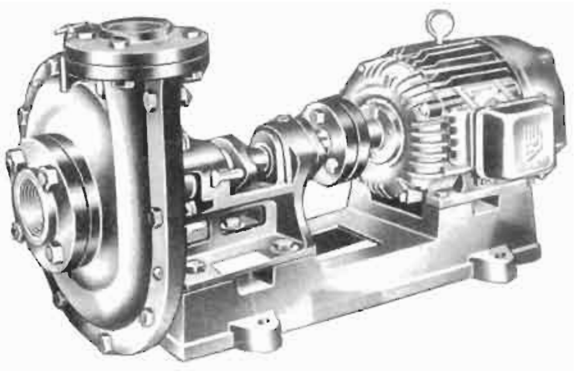

Figure 8.2 Flexible coupling (Courtesy: Crompton Greaves Ltd)

1 *Fluid or hydraulic couplings* These are available in two designs:
  - Constant filled or traction type and
  - Variable filling or scoop control type

2 *Magnetic couplings*
Delayed action clutching helps the load in the following ways:
  - It enables the motor to have a soft start. The motor picks up lightly and quickly and reduces the pressure on the supply source.
  - The motor itself undergoes less stress.
  - This is a type of a mechanical clutch that enables the motor start almost at no-load, irrespective of the type of load.
  - These couplings are adjustable and therefore can also facilitate speed control.
  - Since they work like a mechanical clutch, and engage only slowly and gradually, these couplings enable the motor to have a light start, on the one hand, and a smoother engagement of the load shaft, on the other. It avoids a jerk on the load and an excessive torque demand on the motor. In normal couplings, a high inertia load results in a longer start and demands a high starting torque, and requires either a higher rating or a specially designed high starting torque motor. With the application of these delayed action couplings, it is possible to use a lower rating and a normal torque motor. Proper application of these couplings can thus result in low initial cost of electrical accessories (motor, cables, control gear etc.) and a substantial saving on energy by
    - Selecting a normal low h.p. motor, even for stringent load requirement and adopting a DOL switching.
    - Minimizing the starting losses and strain on the feeding lines, as the motor now starts up lightly and accelerates quickly.
    - Eliminating damper, vane or throttle controls, which are a constant source of energy drain for drives having variable load demands. This is possible by achieving automatic speed regulation of the drive through variable-speed couplings.

For automatic control of the couplings, sensing devices may be placed in the flow circuit of pumps, fans or any drives that have variable load demands during their run. (See Figure 6.38.) The couplings can thus control the flow of air or fluid by automatically regulating the speed of the drive and using only the amount of power that is needed by the load, which results in substantial energy saving. See Section 6.15.2, which analyses the amount of energy saved.

Environment-friendly couplings

These couplings are totally enclosed and are suitable for any environment prone to fire hazard, corrosion, dust or any other pollutants. The controls can be provided remotely in a safer room and the pushbutton stations, which can be easily made suitable for such environments, located with the drive.

8.4 Construction and principle of operation

8.4.1 Fluid or hydraulic couplings

These couplings are made in two parts, the impeller as the inner part and the runner (rotor) as the outer. Both are enclosed in a casing. The impeller and runner are bowl shaped and have large number of radial vanes as shown in Figure 8.4. They are separated by an air gap and have no mechanical interconnection. The impeller is mounted rigidly on the motor shaft while the runner rotates over the impeller, with a uniform air gap. The impeller is filled with fluid (mineral oil) from a filling plug. A fusible plug is provided on the impeller, which blows off and drains out oil from the coupling in the event of sustained overloading, a locked rotor or stalling.

As the motor picks up speed, it builds up a centrifugal force in the impeller, which causes the fluid to spill out and fill the air gap between the two couplings. As the air gap is filled only gradually, the runner engages with the impeller gradually. The impeller converts the mechanical power into hydraulic power and the runner converts this back to mechanical power. The transmission of power from the runner to the load may be through flexible couplings or belts. The torque transmitted during the start is proportional to the square of the motor speed ($T \propto N^2$). There may be small speed variations at the secondary side, which will be due to slip between the impeller and the runner (generally of the order of 2 – 5%). Thus the clutching at full speed is rigid. The following illustrates the clutching sequence.

Consider a heavy inertia load such as a conveyor, having characteristics according to Figure 2.13. Choose a standard motor having the characteristics shown in Figure 8.3. The fluid coupling will have centrifugal characteristics during start ($T \propto N^2$) as shown. The load-transmitting characteristic of the coupling is pre-set (by varying the quantity of oil in it) so that the load will clutch at point A in the graph figure by which time the motor will reach about 80–90% of its rated speed with a torque somewhere in its T_{PO} region. By now the motor's initial inrush current will also droop and it will be operating almost at its normal running condition. The motor will thus pick up lightly and smoothly with an accelerating torque, T_{a1}, with no strain on it or the supply system. After point *A* the coupling will gradually clutch with the load with an accelerating torque, T_{a3}, as illustrated in Figure 8.3. T_{a3} being high, it will accelerate the load quickly once again, without any strain on the motor or the supply system.

These couplings have been produced up to 10 000 kW,

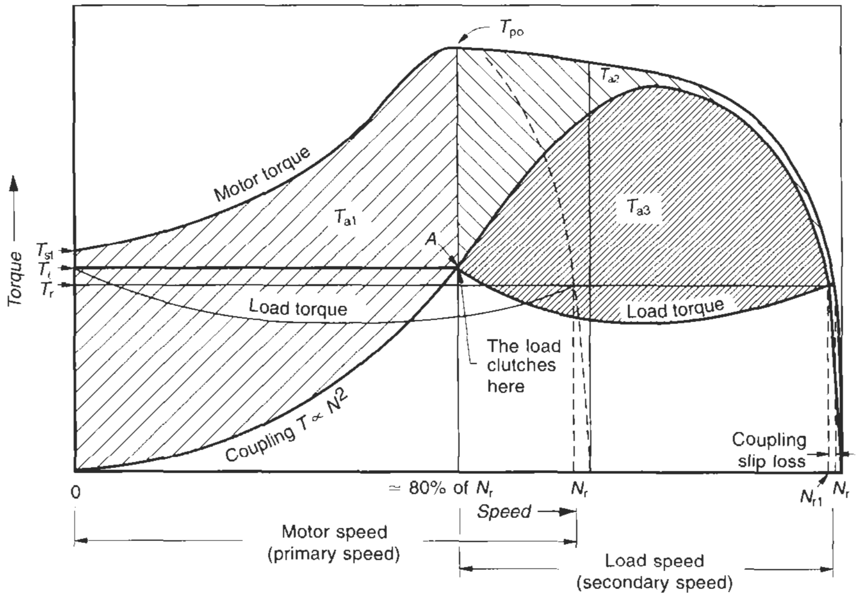

N_{r1} = Coupling speed (Indicates coupling slip)

T_ℓ = Load starting torque

Figure 8.3 Smoother and quicker acceleration of heavy-duty loads with the use of a delayed-action coupling

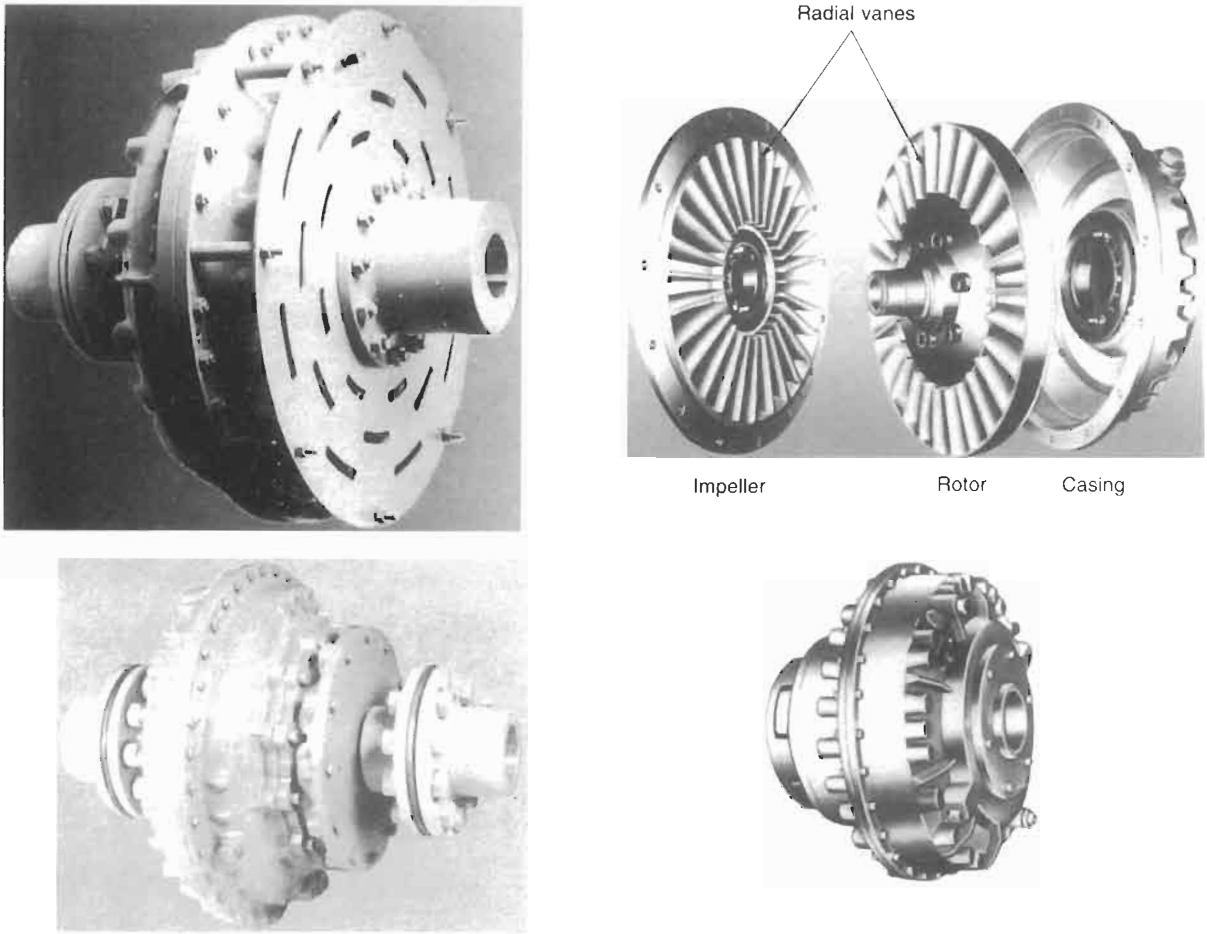

Figure 8.4 Constant filled fluid couplings (Courtesy: Fluidomat Ltd)

by GE, USA. In India they are available up to 2500–3000 kW.

1 *Constant filled or traction type couplings*
(constant-speed couplings)

These are pre-filled fluid couplings. The quantity of oil filled in the coupling cannot be varied during running, hence the name. The quantity of fluid can, however, be changed depending upon the starting or the load requirement. They have a safety device in the form of a fusible plug. The plug blows off and drains out oil from the coupling to provide protection against an excessive temperature rise, which may occur due to sustained overload or stalled conditions, as well as protecting the motor. Figures 8.4 and 8.5 illustrate these couplings and Figure 8.6 shows a general coupling arrangement. The operating slip is in the range of 2–5%. Since they are pre-filled, they are constant-speed couplings.

Applications include electric motor drives for conveyors and other material handling equipment such as stacker reclaimers, crushers, haulages, ball mills, cranes, hammer mills, rotary dryers, centrifuges, reciprocating pumps, winches, fans and wire drawing machines.

In view of their easy adaptability, they are manufactured in standard sizes suitable for common types of load applications. They are therefore available on short deliveries, in smaller ranges, say, from 1 kW to 200 kW. They can be selected for the required service conditions, as a motor is selected to suit a particular load requirement from the available sizes of couplings.

2 *Variable-filling or scoop control-type couplings*
(variable-speed couplings) (Figure 8.7)

Through such couplings the output speed of the runner can be changed by varying the volume of oil in the working circuit through the scoop operating lever, as shown in Figure 8.7(b). When the oil volume is full, slip is at minimum and the output speed is maximum. As the oil circuit is emptied, the slip gradually increases. A constant-speed motor can thus be used to provide a stepless variable-speed drive. Speed variation is possible up to 15–20% of N_r for centrifugal loads such as fans and pumps.

Figures 8.7(a) and (b) illustrate variable-speed couplings which can provide a stepless speed variation over a wide range. The impeller and runner of the couplings are housed in a stationary housing with a built-in oil sump. Oil is

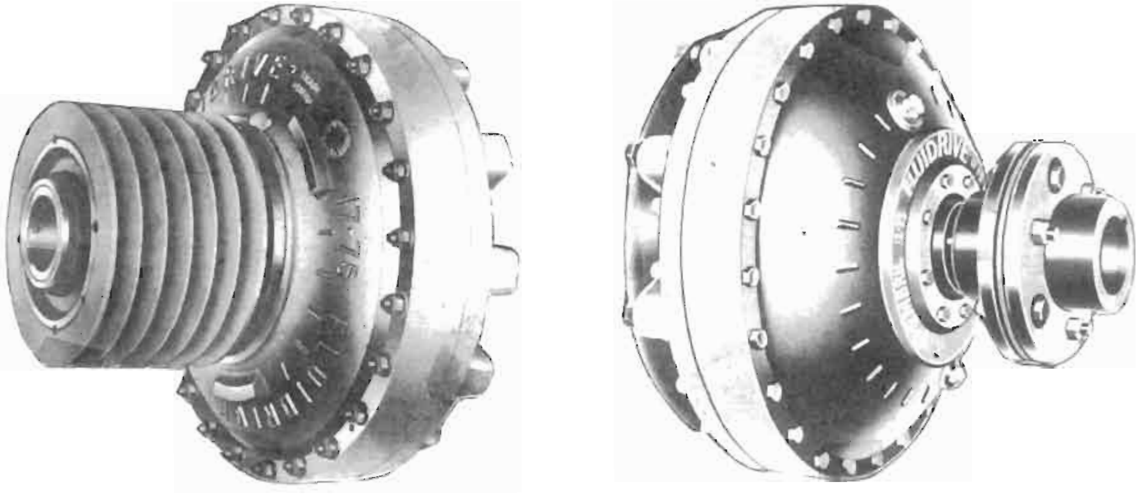

Figure 8.5 Constant filled fluid couplings (Courtesy: Pembril Fluid Drives)

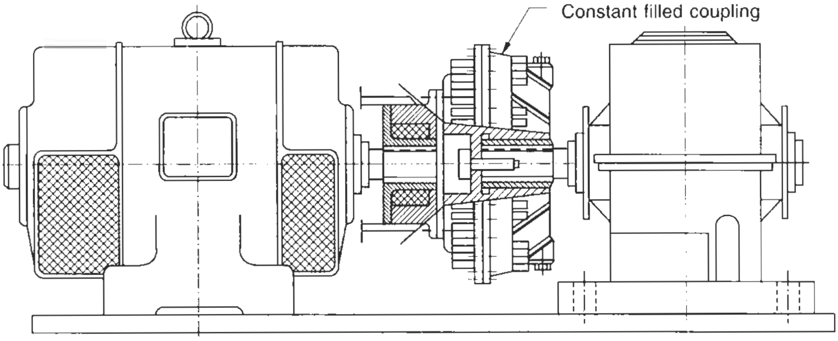

Figure 8.6 General arrangement of a constant filled coupling

continuously introduced into the working circuit through a separately driven oil pump. A scoop tube is provided to regulate the volume of oil in the working circuit and hence control the speed and the transmitting torque. The position of the sliding scoop tube can be governed by a servo-actuator or manually. The coupling can be attached with the motor on one side and load on the other through flexible couplings as shown in Figure 8.7(a).

Regulation of the quantity of oil in the working circuit between the impeller and the runner is effected by an adjustable scoop tube, which slides in the stationary housing (Figure 8.8). When the fluid coupling is at rest, the oil level is below the opening in the casing. With the scoop tube retracted radially inwards, on starting up the set the oil forms a rotating ring in the reservoir casing due to centrifugal force. The casing is of sufficient capacity to contain the full quantity of oil, clear of the tip of the scoop tube, so that the working circuit remains empty, when the drive is disconnected (Figure 8.8(a)).

By sliding the scoop tube radially outwards its tip enters the rotating ring of oil and a quantity of oil is picked up by the scoop tube and transferred to the working circuit. With the working circuit partially filled (Figure 8.8(b)) the output shaft is driven at a reduced speed or the torque capacity of the drive is restricted. With the scoop fully extended (Figure 8.8(c)) all the oil is transferred to the working circuit, bringing the coupling output shaft up to full speed. While the coupling is running, oil escapes from the working circuit into the reservoir casing through small leak-off holes, and is returned to the circuit by the scoop. The radial position of the scoop tube determines the depth of the oil ring in the reservoir casing and thereby the volume of oil in the working circuit.

Fluid couplings have a proven record of reliability and ease of operation. They thus have found wide application wherever a light load start and capacity control of drives is required as in fans and pumps.

The range is from 90 kW to 10 000 kW and applications are as follows:

- *Steel works* conveyors, crushers, wagon tipplers, skid gears, furnace charges, bogie drives in bogie hearth furnaces, furnace winch drives, cranes, pumps, compressors and fans.
- *Power house auxiliaries* ID fans, FD fans, primary and secondary air fans, boiler feed pumps and slurry

pumps, coal mill drives, conveyors, pulverizers and wagon tipplers.

- *Docks and harbours* Material handling, mining, railway traction, process and chemical plants.

Most of these applications are heavy inertia loads and require a light load start. The use of such variable drives can save energy.

Advantages of variable-speed fluid couplings

1 It is possible to switch the motor at no load by selecting a variable-speed fluid coupling. The oil need not be prefilled which can be varied at site during operation as required.

2 The couplings can be designed to develop torques even higher than the T_{PO} of the motor. They can thus be made compatible for transmitting loads up to the optimum capacity of the motor and sustaining abnormal load conditions without stalling or damage.

3 Basically a variable drive fluid coupling is a tailor-made clutch to suit a specific load duty for more accurate application.

4 They are suitable for stepless speed variation and can be controlled through speed, torque, temperature or flow of a process. They can also be programmed for any sequence of operation.

5 Conventional throttling or damper control of flow is waste of energy. The use of such couplings can vary speed through oil control, relieve strain on the system and save on the energy consumption.

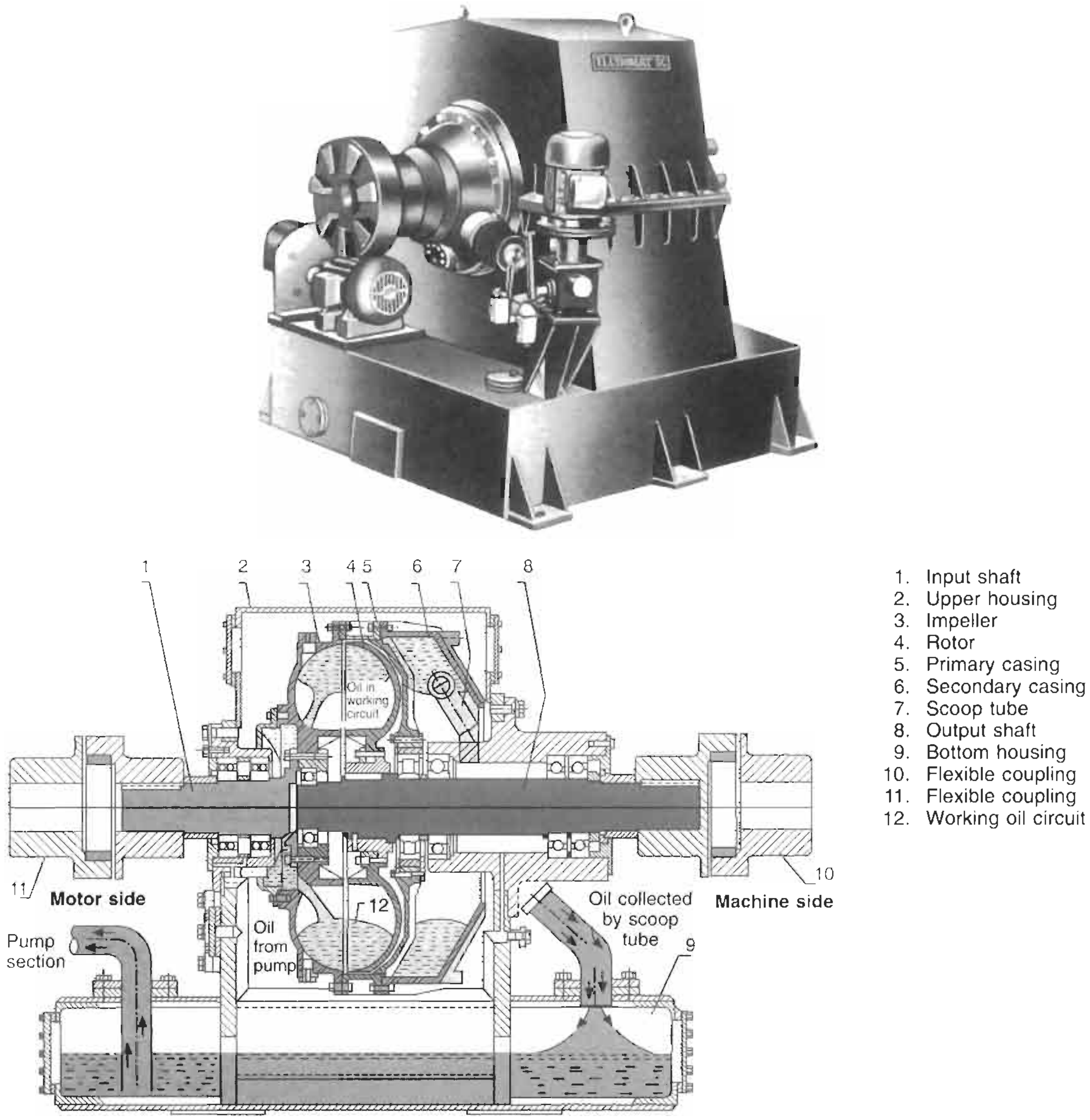

Figure 8.7(a) Variable-speed scoop control fluid coupling (Courtesy: Fluidomat)

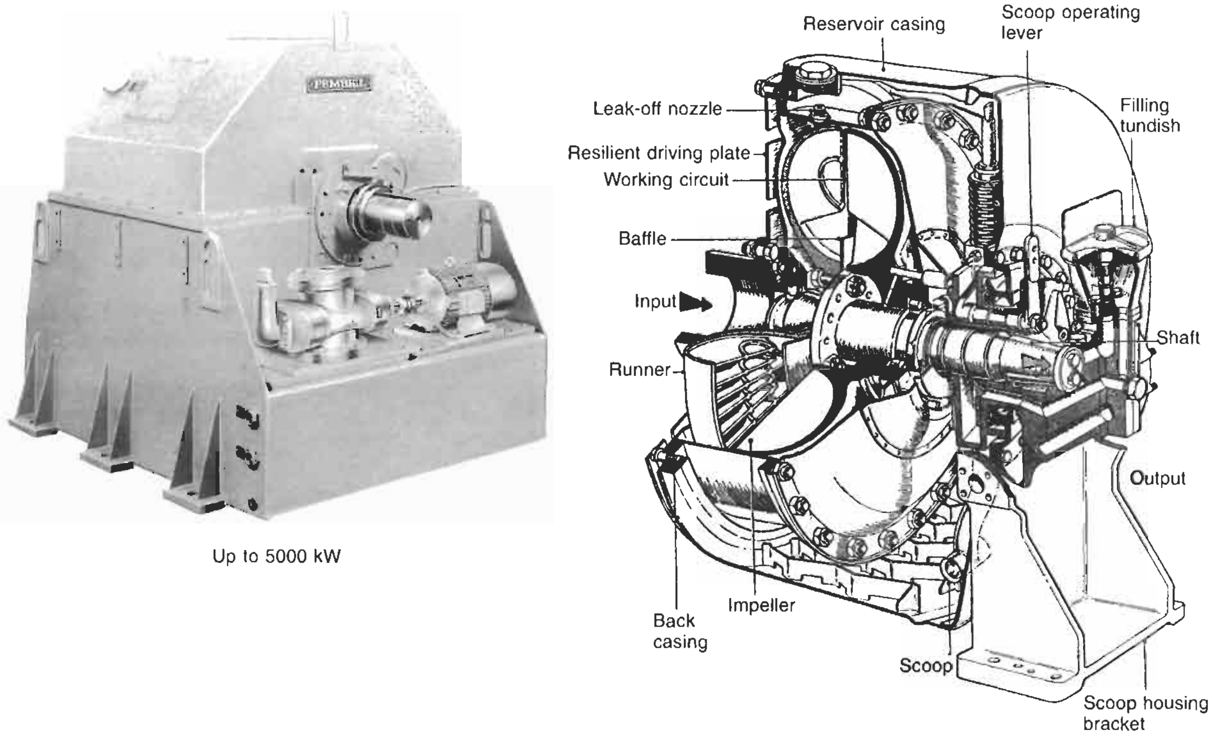

Up to 5000 kW

Figure 8.7(b) Variable-speed scoop control fluid coupling (Courtesy: Pembril Fluidrive)

8.4.2 Magnetic couplings and eddy current couplings

The principle of operation of these couplings is almost the same as of fluid couplings except the air gap between the impeller and the runner of the coupling, which is now filled with iron granules or iron powder instead of fluid. The iron powder condenses into a solid mass when magnetized through an external exciter. The exciter is mounted on the same coupling, and clutches the runner with the impeller. The power of transmission as well as the speed of the runner can be controlled by varying the excitation.

Eddy current couplings have become more common. In this case the impeller of the coupling is a ferromagnetic drum, coupled to the induction motor and housed in an outer shell (Figure 8.9(a)). The shell is fitted with a magnetic yoke and an excitation coil. Within this drum, a multipole inductor, made from special alloy steel, rotates freely, maintaining a close and constant air gap. This forms the driven part or the runner of the coupling. When the excitation coil is energized, it develops a magnetic field in the coupling's runner and impeller. The relative motion between them causes the magnetic field to concentrate on the surface of the drum. This results in a flow of eddy currents in the metallic drum which causes a torque transmission from the prime mover to the runner. The transfer of load from impeller to runner is performed without any mechanical connection. The torque transmitted is a function of the d.c. excitation. By varying the d.c. excitation, the output speed of the drive can be varied smoothly even up to 7–10% of N_r. Similarly, the output speed can be maintained constant, even on a change of load, by sensing the output speed and monitoring the excitation level through a closed-loop speed feedback control system. The speed can be sensed through a tachogenerator mounted integrally on the load shaft. Very accurate feedback control systems are also possible through microprocessor-based analogue and digital controls, as discussed in Sections 6.6 and 13.2.3 to achieve total automation of speed, torque and power or any other process parameter such as, flow of liquid, gas or temperature etc.

Figure 8.9(b) illustrates a general scheme to achieve speed control through such couplings. These couplings, up to 90 kW, are easily available.

Application

This is as for fluid couplings but at lower ratings. Generally, they are used in the cement, rubber and chemical, paper, chemical fibre, electric wire making and mining industries, as well as in material handling, conveyors and thermal power plants.

8.5 Belt drives

Belt drives are employed to transmit load from the driving shaft of the motor to the driven shaft when they are separately located. There are two types of belting available for industrial use.

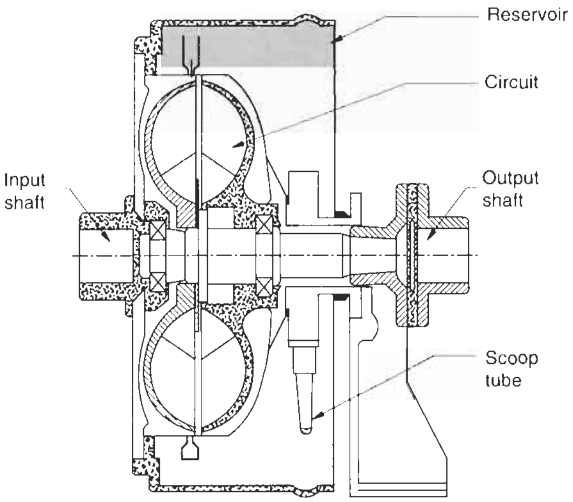

(a) Oil in reservoir, circuit empty, drive is disengaged

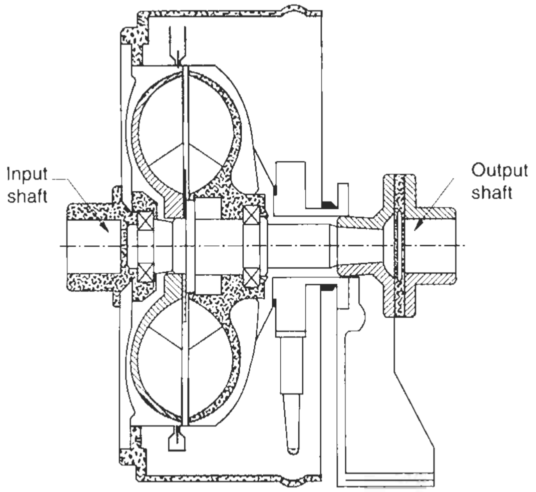

(b) Circuit partly filled, drive is partly engaged

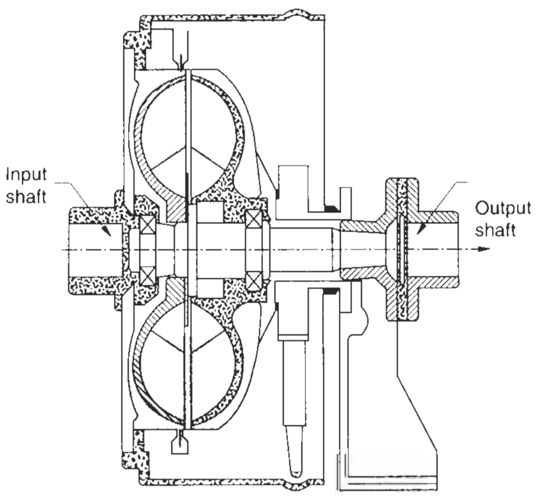

(c) Oil in circuit, drive is fully clutched

Figure 8.8 Illustration of clutching of a scoop control variable fluid coupling

Figure 8.9(a) Eddy current drive (Courtesy: Dynodrive)

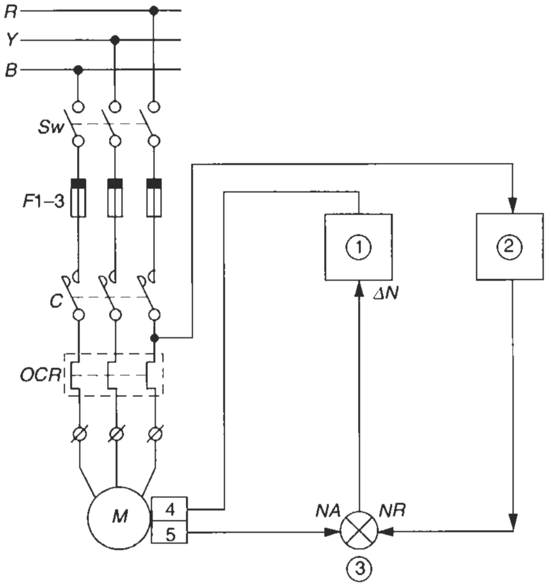

① DC–excitation voltage regulator.
② Speed setting rheostat.
③ Speed comparator.
④ Excitation coil.
⑤ Tacho-generator.
NR – Required speed possible up to 7–10% of N_r.
NA – actual speed.
ΔN – Speed error.

Figure 8.9(b) A general scheme illustrating speed control by feedback control system using an eddy current coupling

- Flat belts
- V-belts

The flat belt is a friction drive transmitting load through the friction between the belt and the pulley while the V-belt is a positive drive which is flat on one side and has a projection like a geartooth on the other. These toothshaped belts seat into pulley-matching grooves. For transmission of smaller loads, flat belts and for small and medium loads, V-belt drives are normally employed.

8.5.1 Flat belts

These are long centre drives with small slips. The slack side of the belt is kept on the top side to increase the angle of contact with the pulleys by sag on the top side. This is essential for an efficient transfer of load. The recommended maximum power that can be transmitted by one belt of different cross-sectional areas is provided by the belt manufacturer and some ratings are given in Table 8.1. When selecting these drives, the following parameters should be borne in mind:

1. The ratio of the diameter of the pulleys should not exceed 6:1 unless a jockey (idler) pulley or similar arrangement is made to press the top side to indirectly increase the arc of contact.
2. Similarly, for shorter centre distances between the drive and the driven pulleys, the arc of contact will decrease. To ensure a good arc of contact, the centre distance C (Figure 8.10), should be kept as much as possible, otherwise the provision of a jockey pulley, as noted above, will also be necessary. A higher arc of contact will ensure a better grip of the belt on the pulley and hence a smaller slip during transmission of the load. A smaller slip would mean a higher transmission of load and vice versa.
3. Vertical and right-angle drives should be avoided.
4. Belts should not be tightened more than necessary, otherwise the drive and the driven shafts will come under torsion and excessive bending moment. The bearings would also be subjected to excessive stresses.

Specification of flat belts

These belts are made of cotton duck (a cotton fabric used in making canvass and tents) with different mixes to provide them with a degree of hardness, as noted in Table 8.2.

The duck is glued in thin layers (plies) with a rubber compound and vulcanized (cured). The number of plies used to make a belt and their quality defines the strength of the belt (e.g. 3 ply × 32 or 3 ply × 34, etc.).

Selection of flat belts for transmission of load

The selection of flat belts is made along similar lines to that for V-belts (discussed later in more detail). The load-transmission capacity of a flat belt can be defined by

$$W = P \cdot \frac{\text{SF}}{\text{Correction for arc of contact}} \tag{8.1}$$

where

P = load to be transmitted in kW

W = maximum load-transmission capacity of the belt. By convention, this is provided by the belt manufacturer per 25 mm of belt width, at different speeds of the faster shaft (smaller pulley) for different recommended widths of belts, number of plies and type and grade of duck, etc. We show Type I and Type II in Table 8.1 for a general illustration. These ratings may vary marginally from one manufacturer to another, depending upon their product mix and quality of curing.

SF (Service factor) – as in Table 8.5.

Correction for arc of contact – as in Table 8.7.

In the following example we illustrate a brief procedure to select a flat belt for transmission of a load.

Example 8.1

Determine the width of a heavy-duty double-leather flat belt for transmitting a load of 18.5 kW at 1480 r.p.m. from a squirrel cage motor to be switched directly on line. Diameters of pulleys are 250 mm on the motor side and 200 mm on the load side. The centre distance between the pulley may be considered as 800 mm.

P = 18.5 kW

SF = 1.4 for heavy-duty Class 3, as shown in Table 8.5, presuming operations for 10 hours/day.

Correction for arc of contact:

$$\text{Corresponding to } \frac{D-d}{C} = \frac{250-200}{800} \quad \text{(Figure 8.10)}$$
$$= 0.0625$$

The correction factor from Table 8.7 = 0.99

$$\therefore \quad W = \frac{18.5 \times 1.4}{0.99}$$
$$= 26.17 \text{ kW}$$

The belt must be rated at least for this load.

$$\text{Speed of the faster pulley} = \frac{1480 \times 250}{200}$$
$$= 1850 \text{ r.p.m.} \qquad \text{(a)}$$

$$\text{or} \qquad \frac{\pi \times 200 \times 1850}{60 \times 1000} = 19.36 \text{ m/s, which is quite low}$$

(< 30 m/s) hence acceptable.

Consider a belt width of 200 mm to transmit this load.

$$\text{Therefore minimum belt rating per 25 mm} = \frac{25}{200} \times 26.17$$
$$= 3.27 \text{ kW} \qquad \text{(b)}$$

For parameters (a) and (b) the possible belt sizes can be

1. Four-ply 28 soft duck or four-ply 31 hard duck, according to Table 8.1 Type I, having a rating of 3.25 kW at 1800 r.p.m. and 3.45 kW at 2000 r.p.m., or
2. Three-ply 32 soft duck or three-ply 34 hard duck, according to Table 8.1 Type II, having a rating of 3.32 kW at 1800 r.p.m.

For a more judicious selection of belts, keeping economics in mind, it is advisable to seek an opinion from the manufacturer.

Table 8.1 Power ratings (kW/25 mm) for different widths of flat belts with 180° arc of contact on a smaller pulley

Type I

Belt type	*Speed of faster shaft (r.p.m.)*	*Smaller pulley diameter (mm)*						
		100	125	160	200	250	315	400
	720	0.48	0.78	1.15	1.61	2.19	2.85	3.63
	960	0.62	1.00	1.45	2.05	2.77	3.55	4.38
	1440	0.87	1.39	2.01	2.80	3.70	4.59	
4 × 28 and 4 × 31	100	0.09	0.14	0.20	0.29	0.39	0.53	0.67
	200	0.16	0.25	0.37	0.53	0.73	0.95	1.24
	300	0.23	0.37	0.53	0.75	1.03	1.37	1.77
	400	0.29	0.47	0.69	0.97	1.33	1.74	2.26
	500	0.35	0.57	0.84	1.18	1.61	2.11	2.72
	600	0.41	0.67	0.98	1.38	1.88	2.46	3.15
	700	0.47	0.77	1.12	1.58	2.14	2.78	3.55
	800	0.53	0.86	1.25	1.76	2.39	3.10	3.92
	900	0.59	0.95	1.38	1.94	2.62	3.40	4.26
	1000	0.65	1.04	1.51	2.12	2.85	3.67	4.56
	1200	0.75	1.20	1.75	2.44	3.26	4.15	5.03
	1400	0.85	1.36	1.98	2.74	3.63	4.53	5.32
	1600	0.95	1.51	2.18	3.01	3.95	4.81	
	1800	1.04	1.66	2.37	3.25	4.19		
	2000				3.45	4.38		
	2200				3.61	4.49		
	2400				3.73			

Type II

Belt type	*Speed of faster shaft (r.p.m.)*	*Smaller pulley diameter (mm)*						
		80	100	125	160	200	250	315
	720	0.44	0.61	0.85	1.21	1.62	2.09	2.61
	960	0.56	0.78	1.08	1.55	2.06	2.64	3.26
	1440	0.80	1.10	1.52	2.16	2.84	3.57	4.24
	2880		1.88	2.52	3.39			
3 × 32 and 3 × 34	100	0.08	0.11	0.15	0.22	0.29	0.38	0.48
	200	0.14	0.20	0.28	0.40	0.53	0.69	0.87
	300	0.20	0.28	0.39	0.57	0.76	0.99	1.24
	400	0.26	0.36	0.51	0.73	0.98	1.27	1.59
	500	0.32	0.44	0.62	0.89	1.19	1.53	1.93
	600	0.37	0.52	0.72	1.04	1.39	1.79	2.25
	700	0.43	0.59	0.83	1.18	1.58	2.04	2.55
	800	0.48	0.67	0.93	1.33	1.77	2.28	2.83
	900	0.53	0.74	1.03	1.47	1.96	2.51	3.11
	1000	0.58	0.81	1.12	1.60	2.13	2.73	3.36
	1200	0.68	0.94	1.31	1.87	2.47	3.14	3.81
	1400	0.78	1.08	1.49	2.11	2.78	3.50	4.18
	1600	0.87	1.20	1.66	2.34	3.07	3.81	4.45
	1800		1.32	1.82	2.56	3.32	4.07	
	2000		1.44	1.97	2.76	3.54	4.28	
	2200		1.55	2.11	2.93	3.73	4.42	
	2400		1.65	2.25	3.09	3.89		
	2600		1.75	2.37	3.23	4.00		
	2800		1.85	2.48	3.35	4.07		
	3000			2.58	3.44			
	3200			2.67	3.51			

Source IS 1370. See also ISO 22

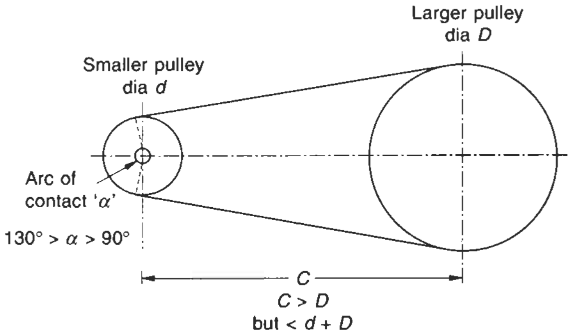

Figure 8.10 Angle of contact with a flat-belt drive

Table 8.2 Specification of flat belts

Quality	*Type of duck*[a]	*Nominal weight* (g/m^2)
Soft	28	845
	32	950
Hard	31	910
	34	970

[a]As in IS 5996

Source *IS 1370*. See also ISO 22

8.5.2 V-Belts

These are short centre drives unlike flat belt drives. The belt slip in such drives is negligible. The recommended maximum power that can be transmitted through such belts of different cross-sectional areas is provided by the belt manufacturer. The normal cross-sections of V belts in practice are given in Table 8.3. The cross-section of a belt depends upon the power to be transmitted and its speed. To select the appropriate section of the belt for the required transfer of load refer to Figure 8.11 also provided by the manufacturer. It is recommended that the pulleys be used with maximum possible diameters and distance between their centres be maintained as more than the diameter of the larger pulley.

Table 8.3 Nominal cross-sections of V-belts and their code numbers

Belt section	*Area of cross-section in* mm^2 *W·T (approx.)*
Z	10 × 6
A	13 × 8
B	17 × 11
C	22 × 14
D	32 × 19
E	38 × 23

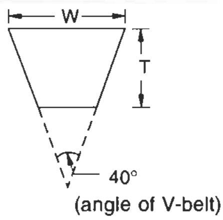

Based on IS 2494-1: See also ISO 4184

Selection of V-Belts

The load-transmitting capacities of a single V-belt, at 180° arc of contact, are provided by the belt manufacturer as standard selection data for the user for different areas of belt cross-sections and speed of the faster shaft. We have provided this data for a leading manufacturer, for belts of section *D*, in Table 8.4, to illustrate the selection of V-belts for the drive of Example 8.2.

Figure 8.12 shows the arc of contact, i.e. the contact angle, the belt would make with the pulley. As for a motor a belt is also subject to unfavourable operating conditions that require deratings depending upon the working conditions, arc of contact and the length of the belt selected as noted below:

1 **Service factor (SF)**
This will depend upon the type of drive, the torque requirement and operations in hour per day etc. The subsequent deratings are the same for all manufacturers and we provide these in Table 8.5.
2 **Correction for length of belt**
The longer the belt, the larger the load it can transmit and vice versa. These factors are also the same for all manufacturers, as shown in Table 8.6.
3 **Correction for arc of contact**
The standard ratings of belts are provided at 180° arc of contact. The smaller the diameter or the higher the speed of the smaller pulley, the smaller will be this angle and vice versa. The load-transmitting capacity of the belt diminishes with reduction of this angle and we show this factor in Table 8.7. A contact angle less than 120° would exert more centrifugal forces on the motor shaft and the driving-end (DE) bearing. If this is the case the shaft and the DE bearing, may need reinforcement, the provision of a jack shaft, or an additional support at the far end of the motor shaft. Figures 8.15 and 8.16 show the arrangement of a jack shaft and an additional support at the far end of the shaft respectively. Such a situation must, however, be avoided, as far as possible.

In Example 8.2 we illustrate a step-by-step procedure to select the most appropriate size and length of belts and pulley sizes to transmit a particular load.

Example 8.2
Consider a reciprocating compressor operating in a process plant and using a motor of 110 kW, 980 r.p.m. The compressor is required to operate at 825 r.p.m. through V-belts. The approximate centre distance between the motor and the compressor may be considered as 1 m.

We can adopt the following procedure to select the recommended belt sizes:

1 *Determine the design power of transmission*
Design power = motor rating × SF
Assuming the motor to be switched DOL and operating

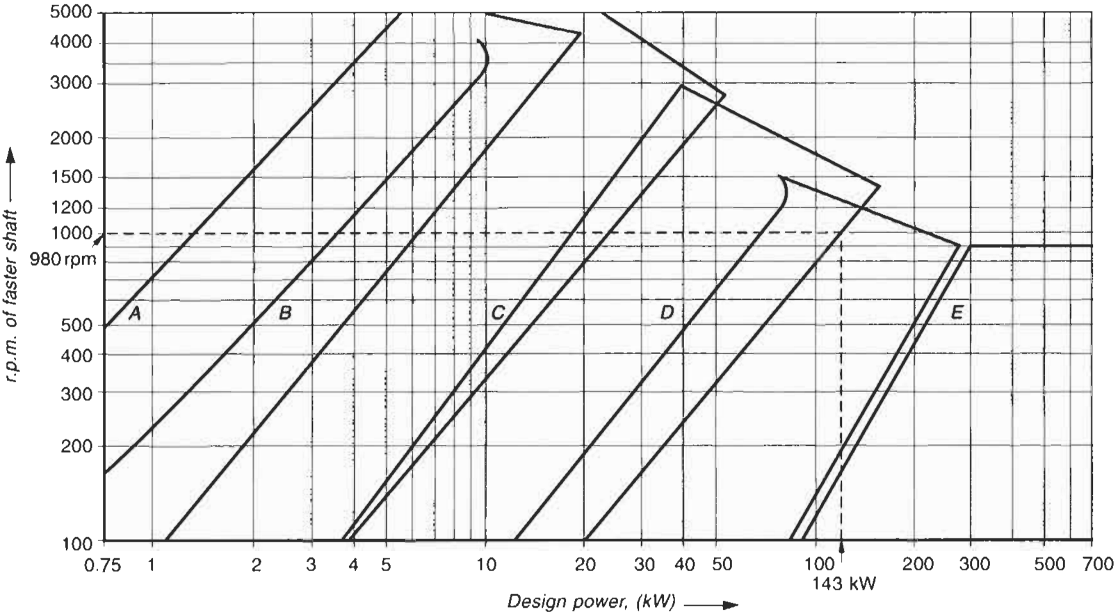

Figure 8.11 Selection of cross-section for V-belts

for an average 14 hours/day, then the SF according to Table 8.5 = 1.3

and design power = 110 × 1.3

$$= 143 \text{ kW}$$

Calculate the speed ratio of the faster shaft to the slower shaft

$$= \frac{980}{825} = 1.19$$

This is the same as $\dfrac{\text{Pitch dia. of larger pulley}}{\text{Pitch dia. of smaller pulley}}$

Select the belt cross-section
Use the selection curves provided by the manufacturer (which are almost the same for all manufacturers) (see Figure 8.11). For a design power of 143 kW to be transmitted at 980 r.p.m., the recommended cross-section of belts according to these curves is identified as *D*.

Select the pulley diameter
Refer to the manufacturer's catalogue for the recommended pulley pitch and outside diameters. These data are provided in Table 8.8 for a leading manufacturer.

Consider small pulley of d = 400 mm

Then the larger pulley $D = 400 \times 1.19$

$$= 476 \text{ mm}$$

The nearest standard size available is 475 mm which is acceptable.

Determine the belt pitch length
The pitch length of a belt is its circumferential length at the pitch width of the belt. The pitch width of a belt is shown in Figure 8.12, and is provided by manufacturers as standard data. It can be calculated by

$$L = 2C + 1.57(D + d) + \frac{(D - d)^2}{4C} \qquad (8.2)$$

where
L = belt pitch length (mm)
C = centre distance between the two pulleys (mm).
D = pitch diameter of the larger pulley (mm)
d = pitch diameter of the smaller (faster) pulley (mm)

$$\therefore \; L = 2 \times 1000 + 1.57(475 + 400) + \frac{(475 - 400)^2}{4 \times 1000}$$

$$= 2000 + 1373.75 + 1.406$$

$$= 3375.16 \text{ mm.}$$

We show the nominal inside length for various standard sections of belts in Table 8.9. According to the table the nearest standard belt available has a pitch length of 3330 or 3736 mm. For a more closer length of belt, either change the pulley size or select another make of belt or have it made to order. But a length of 3330 seems reasonable, hence it is accepted.

$$\therefore \; L = 3330 \text{ mm}$$

The centre distance will now be less than 1 m and can be calculated by

$$C = A + \sqrt{A^2 - B}$$

where $A = \dfrac{L}{4} - \dfrac{\pi}{8}(D + d)$

and $B = \dfrac{(D - d)^2}{8}$

(These formulae are available in the product catalogues of all leading manufacturers.)

$$\therefore \quad A = \frac{3330}{4} - \frac{\pi}{8}(475 + 400)$$

$$= 832.5 - 343.44$$

$$= 489.06$$

Table 8.4 Power ratings for section D V-belts, with 180° arc of contact with the smaller pulley

Speed of faster shaft	*Power rating for smaller pulley, with preferred pitch diameter of*										*Additional power per belt, for speed ratio of*									
(*r.p.m.*)	355 mm	375 mm	400 mm	425 mm	450 mm	475 mm	500 mm	530 mm	560 mm	600 mm	1.00 to 1.01	1.02 to 1.04	1.05 to 1.08	1.09 to 1.12	1.13 to 1.18	1.19 to 1.24	1.25 to 1.34	1.35 to 1.51	1.52 to 1.99	2.00 and over
	kW	kW	kW	kW	kW	kW	kW	kW	kW	kW	kW	kW	kW	kW	kW	kW	kW	kW	kW	kW
720	16.26	17.90	19.90	21.85	23.75	23.59	27.38	29.44	31.42	33.91	0.00	0.25	0.50	0.75	1.00	1.25	1.50	1.75	2.00	2.25
960	19.26	21.16	23.45	25.63	27.70	29.65	31.47	33.50	35.32	–	0.00	0.33	0.67	1.00	1.34	1.67	2.00	2.33	2.67	3.00
1440	21.22	23.03	–	–	–	–	–	–	–	–	0.00	0.50	1.00	1.50	2.00	2.50	3.00	3.50	4.00	4.50
100	3.39	3.70	4.08	4.45	4.83	5.20	5.57	6.02	6.46	7.04	0.00	0.03	0.07	0.10	0.14	0.17	0.21	0.24	0.28	0.31
200	6.04	6.61	7.32	8.02	8.72	9.42	10.11	10.93	11.75	12.83	0.00	0.07	0.14	0.21	0.28	0.35	0.42	0.49	0.56	0.63
300	8.41	9.22	10.24	11.24	12.24	13.22	14.20	15.37	16.52	18.04	0.00	0.10	0.21	0.31	0.42	0.52	0.62	0.73	0.83	0.94
400	10.57	11.61	12.91	14.19	15.45	16.70	17.94	19.40	20.85	22.74	0.00	0.14	0.28	0.42	0.56	0.70	0.83	0.97	1.11	1.25
500	12.55	13.80	15.35	16.87	18.38	19.86	21.32	23.03	24.72	26.91	0.00	0.17	0.35	0.52	0.70	0.87	1.04	1.22	1.39	1.56
600	14.34	15.79	17.56	19.30	21.01	22.68	24.32	26.23	28.09	30.49	0.00	0.21	0.42	0.62	0.83	1.04	1.25	1.46	1.67	1.88
700	15.96	17.57	19.54	21.46	23.33	25.15	26.91	28.96	30.92	33.41	0.00	0.24	0.49	0.73	0.97	1.22	1.46	1.70	1.95	2.19
800	17.39	19.14	21.26	23.32	25.31	27.22	29.06	31.17	33.16	35.62	0.00	0.28	0.56	0.83	1.11	1.39	1.67	1.95	2.22	2.50
900	18.62	20.48	22.72	24.87	26.92	28.87	30.73	32.81	34.73	37.02	0.00	0.31	0.63	0.94	1.25	1.56	1.87	2.19	2.50	2.81
1000	19.64	21.57	23.88	26.07	28.14	30.07	31.86	33.82	35.57		0.00	0.35	0.70	1.04	1.39	1.74	2.08	2.43	2.78	3.13
1100	20.43	22.40	24.74	26.91	28.92	30.76	32.42				0.00	0.38	0.77	1.15	1.53	1.91	2.29	2.63	3.06	3.44
1200	20.98	22.96	25.26	27.36	29.25	30.92					0.00	0.42	0.84	1.25	1.67	2.09	2.50	2.92	3.34	3.75
1300	21.27	23.21	25.42	27.38							0.00	0.45	0.91	1.35	1.81	2.26	2.71	3.16	3.61	4.06
1400	21.29	23.15	25.21								0.00	0.49	0.98	1.46	1.95	2.43	2.92	3.40	3.89	4.38
1500	21.03	22.76									0.00	0.52	1.05	1.56	2.09	2.61	3.12	3.65	4.17	4.69
1600	20.46										0.00	0.56	1.11	1.67	2.23	2.78	3.33	3.89	4.45	5.00

Courtesy Goodyear

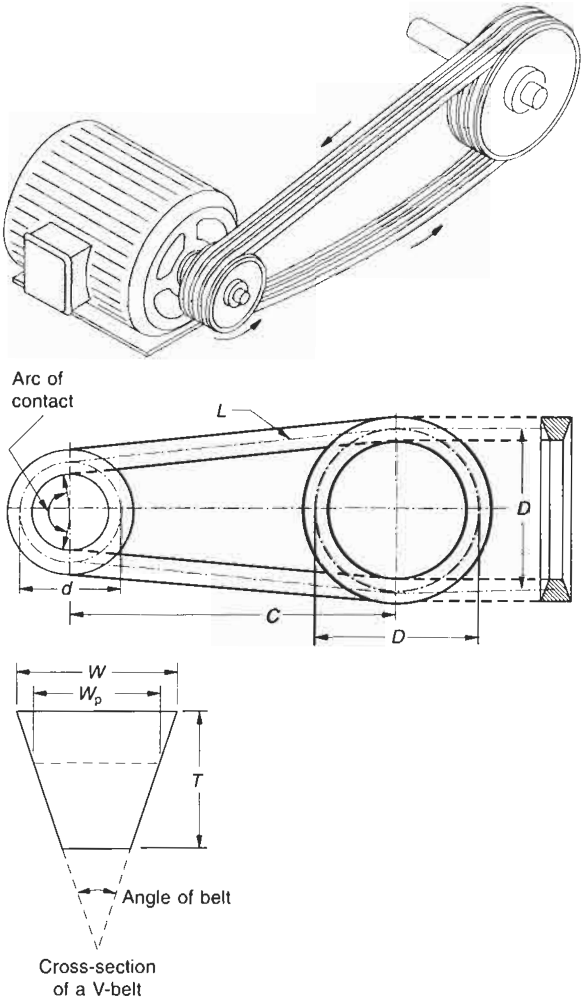

Figure 8.12 Determining the belt details in a V-belt drive

$$\text{and } B = \frac{(475-400)^2}{8}$$

$$= 703.12$$

$$\therefore \quad C = 489.06 + \sqrt{489.06^2 - 703.12}$$

$$= 489.06 + 488.34$$

$$= 977.40 \text{ mm, which is acceptable}$$

6 Determine the power rating per belt from the technical data provided by the manufacturer. This will vary from one manufacturer to another, depending upon the quality of rubber used. We have considered this data, as shown in Table 8.4, of a leading manufacturer.

Corresponding to 1000 r.p.m. and $d = 400$ mm.

Power rating of belt having section $D = 23.88$ kW/belt, with an additional power-transmitting capacity for a speed ratio of 1.19 = 1.74 kW/belt.

∴ Total load-transmitting capacity = 25.62 kW/belt

7 *Determine correction factors*
   (i) For the arc of contact shown in Table 8.7, which is the same for all manufacturers. Corresponding to an arc of contact of $\frac{D-d}{C}$ on the smaller pulley

   i.e. for $\frac{475-400}{977.40}$ or 0.077

   The correction factor is not less than 0.99.
   (ii) Determine the belt pitch length correction factor form (Table 8.6) which is same for all manufacturers. Corresponding to $L = 3330$ mm for the belt of section D, it is 0.87.

8 Determine the number of belts for the total load to be transmitted.

Corrected power capacity of each belt of section

$$D = 25.62 \times 0.99 \times 0.87$$

$$= 22.06 \text{ kW}$$

$$\therefore \text{ Number of belts required } = \frac{143}{22.06}$$

$$= 6.48$$

or 7 belts

9 Counter-check the selection for the speed of the smaller pulley.

Speed = $\pi \cdot d \cdot N_r \cdot$ mm/min

where N_r = speed of the faster shaft = 980 r.p.m.
d = pitch dia. of the faster (smaller) pulley = 400 mm.

$$\therefore \text{ Speed of faster pulley } = \frac{\pi \times 400 \times 980}{60 \times 1000}$$

$$= 20.51 \text{ m/s}$$

which is less than 30 m/s, hence acceptable. Had it not been so, advice from the manufacturer on the selection of belts would have been necessary.

Thus the specification of the belts and the pulleys will be

- *Belts*
  cross-section – D
  pitch length L – 3330 mm
  Number of belts – 7

Note To avoid uneven distribution of load on the belts when more than one belt is used the pitch length of the belts must be identical, subject to permissible tolerances. For this purpose, it is advisable to use all belts of one make only. As standard practice all belts are marked on their surfaces with their length and permissible tolerance for easy identification.

- *Pulleys*

(a) Smaller pulley on motor shaft
   Pitch dia. = 400 mm
   Number of grooves suitable for belts of section $D = 7$
(b) Larger pulley on the compressor shaft
   Pitch dia. = 475 mm
   Number of grooves suitable for belts of section $D = 7$

Table 8.5 Service Factors for flat and V-belts

Types of loads		*Types of driving units*					
		Light starts *'Soft' starters, star-delta, wound motor and A/T starters, or when the prime mover is fitted with centrifugal clutches or delayed-action fluid couplings*			*Heavy starts direct on line*		
Class	*Examples*	*Hours of duty per day*			*Hours of duty per day*		
		10 and under	*Over 10 to 16*	*Over 16*	*10 and under*	*Over 10 to 16*	*Over 16*
Class 1 (Light duty)	Agitators (uniform density) Blowers, exhausts and fans (up to 75 kW) Centrifugal compressors and pumps Belt conveyors (uniformly loaded)	1.0	1.1	1.2	1.1	1.2	1.3
Class 2 (Medium duty)	Agitators and mixers (variable density) Blowers, exhausts and fans (over 75 kW) Rotary compressors and pumps (other than centrifugal) Belt conveyors (not uniformly loaded) Generators and exciters Laundry machinery Line shafts Machine tools Printing machinery Sawmill and woodworking machinery Screens (rotary)	1.1	1.2	1.3	1.2	1.3	1.4
Class 3 (Heavy duty)	Brick machinery Bucket elevators Compressors and pumps (reciprocating) Conveyors (heavy duty) Hoists Mills (hammer) Pulverizers Punches, presses, shears Quarry plant Rubber machinery Screens (vibrating) Textile machinery)	1.2	1.3	1.4	1.4	1.5	1.6
Class 4 (Extra heavy duty)	Crushers	1.3	1.4	1.5	1.5	1.6	1.8

For speed-increasing drives of speed ratio 1.00 to 1.24: multiply service factor by 1.00
speed ratio 1.25 to 1.74: multiply service factor by 1.05
speed ratio 1.75 to 2.49: multiply service factor by 1.11
speed ratio 2.50 to 3.49: multiply service factor by 1.18
speed ratio 3.50 and over: multiply service factor by 1.25

Note
1 The service factors do not apply to light duty drives.
2 The use of a jockey (idler) pulley on the outside of the belt is not recommended.

Special conditions
For reversing drives, except where high torque is not present on starting, add 20% to these factors.

Table 8.6 Correction factors for belt pitch length

Correction factor	*Belt pitch length*					
	Belt cross-sections					
	Z mm	*A* mm	*B* mm	*C* mm	*D* mm	*E* mm
0.80		630				
0.81			930			
0.82		700		1560	2740	
0.83			1000			
0.84		790		1760		
0.85			1100			
0.86	405	890			3130	
0.87			1210	1950	3330	
0.88		990				
0.89						
0.90	475	1100	1370	2190	3730	4660
0.91				2340		
0.92	530		1560	2490	4080	5040
0.93		1250				
0.94				2720	4620	5420
0.95	625		1760	2800		
0.96		1430		3080		6100
0.97			1950		5400	
0.98	700	1550		3310		
0.99		1640	2180	3520		6850
1.00	780	1750	2300		6100	
1.02		1940	2500	4060		7650
1.03					6840	
1.04	920	2050	2700			
1.05		2200	2850	4600	7620	9150
1.06		2300				
1.07	1080				8410	9950
1.08		2480	3200	5380		
1.09		2570			9140	10710
1.10		2700	3600			
1.11				6100		
1.12		2910			10700	12230
1.13		3080	4060			
1.14		3290		6860		13750
1.15			4430			
1.16		3540	4820	7600	12200	
1.17			5000		13700	15280
1.18			5370			
1.19			6070		15200	16800
1.20				9100		
1.21				10700		

8.6 Checking the suitability of bearings

8.6.1 Forces acting on the DE motor bearing

When transmitting the load to the driven equipment, the motor bearing at the driving end (DE) is normally subject to two types of forces, radial and axial. The axial force in a horizontal drive is normally zero. If it is not zero this may be due to eccentricity in the transmitting line or any such reason that may subject the driving end bearing to an axial load in addition to a radial load. These forces become severe when the load from the motor is being transmitted through belts. In such cases it is of the utmost importance to check the suitability of the bearing and the motor shaft to transmit the required load under such conditions.

We provide below a few guidelines for checking the suitability of the bearing and the motor shaft, when selecting a motor for these drives:

- **Radial forces**

  The radial forces acting on the bearing can be determined by the belt pull and is expressed by

$$P_r = \frac{K \cdot 973 \cdot \mathrm{kW}}{N_r \cdot \frac{D}{2}} \pm W\,\mathrm{kg} \qquad (8.3)$$

Table 8.7 Arc of contact correction factors [flat and V-belts]

$\frac{D-d}{C}$	*Arc of contact on smaller pulley (degrees)*	*Correction factor, i.e. proportion of 180° rating*
0.00	180	1.00
0.05	177	0.99
0.10	174	0.99
0.15	171	0.98
0.20	169	0.97
0.25	166	0.97
0.30	163	0.96
0.35	160	0.95
0.40	157	0.94
0.45	154	0.93
0.50	151	0.93
0.55	148	0.92
0.60	145	0.91
0.65	142	0.90
0.70	139	0.89
0.75	136	0.88
0.80	133	0.87
0.85	130	0.86
0.90	127	0.85
0.95	123	0.83
1.00	120	0.82

Note Arc of contact with smaller pulley $= 180° - \frac{57.3(D-d)}{C}$

where C is the centre distance (mm)
D is the pitch diameter of larger pulley (mm)
d is the pitch diameter of smaller pulley (mm)
} Figure 8.10 or 8.12

where

K = belt factor, 2 to 2.5 for V-belts and 2.5 to 3 for flat belts. Sometimes it may be higher (up to 4 to 5). (The higher values must be considered when the distance between shafts is short or belt tension is high).
D = diameter of pulley on the motor (m)
l = half of the pulley width (load distance) (m)
W = weight of complete rotor and driven masses on the motor shaft, such as the pulley and the belts (kg)
'+' applicable when the belt pull is downwards [vertical drives, Figure 8.13(a)] and
'–' applicable when the belt pull is upwards [vertical drives, Figure 8.13(b)].
'0' when the shaft is horizontal or the drive and the driven equipment are in the same horizontal plane and in line with each other.

The allowable pulley loads for standard motors are given in Table 8.10. These are recommended by a few manufacturers for their motors, but they are generally true for other motors also.

- The bending moment at the weakest section of the shaft, i.e. at the collar of the DE shaft (Figure 8.14).

$$\text{B.M.} = P_r \cdot l = \frac{K \cdot 973 \cdot kW}{N_r \cdot \frac{D}{2}} \cdot l \text{ mkg}$$

Table 8.8 Recommended standard pulley and outside diameters

Belt section	*Outside diameter*				
	A	*B*	*C*	*D*	*E*
Pitch diameter[a] (mm)	mm	mm	mm	mm	mm
75	81.6				
80	86.6				
85	91.6				
90	96.6				
95	101.6				
100	106.6				
106	112.6				
112	118.6				
118	124.6				
125	131.6	133.4			
132	138.6	140.4			
140	146.6	148.4			
150	156.6	158.4			
160	166.6	168.4			
170		178.4			
180	186.6	188.4			
190		198.4			
200	206.6	208.4	211.4		
212		220.4	223.4		
224		232.4	235.4		
236		244.4	247.4		
250	256.6	258.4	261.4		
265			276.4		
280		288.4	291.4		
315	321.6	323.4	326.4		
355		362.4	366.4	371.2	
375				391.2	
400	406.6	408.4	411.4	416.2	
425				441.2	
450			461.4	466.2	
475				491.2	
500	506.6	508.4	511.4	516.2	
530				546.2	
560			571.4	576.2	
630	636.6	638.4	641.4	646.2	
710				726.2	
800	806.6	808.4	811.4	816.2	
900				916.2	
1000	1006.6	1008.4	1011.4	1016.2	
1250		1258.4	1261.4	1266.2	
1600				1616.2	
2000				2016.2	

[a] The limits of tolerances on the pitch diameter will be ± 0.8%
Courtesy Goodyear. See also IS 3142 and ISO 4183

- *Axial forces or thrust load*
  When these exist they can be expressed by

P_a (for horizontal motors) = axial force of pump, turbine or any other load (kg)
P_a (for vertical motors) = axial force as above + weight of complete rotor and driven masses on the motor shaft such as the pulley and the belts (kg.)

Table 8.9 Nominal inside lengths, pitch lengths *L* for all standard sizes of multiple V-belts

Nominal inside length	*Pitch lengths*				
	Cross-section A	*Cross-section B*	*Cross-section C*	*Cross-section D*	*Cross-section E*
610	645	–	–	–	–
660	696	–	–	–	–
711	747	–	–	–	–
787	823	–	–	–	–
813	848	–	–	–	–
889	925	932	–	–	–
914	950	958	–	–	–
965	1001	1008	–	–	–
991	1026	1034	–	–	–
1016	1051	1059	–	–	–
1067	1102	1110	–	–	–
1092	1128	1136	–	–	–
1168	1204	1211	–	–	–
1219	1255	1262	1275	–	–
1295	1331	1339	1351	–	–
1372	1408	1415	1428	–	–
1397	1433	1440	1453	–	–
1422	1458	1466	1478	–	–
1473	1509	1516	1529	–	–
1524	1560	1567	1580	–	–
1800	1636	1643	1656	–	–
1626	1661	1669	1681	–	–
1651	1687	1694	1707	–	–
1727	1763	1770	1783	–	–
1778	1814	1821	1834	–	–
1829	1865	1872	1885	–	–
1905	1941	1948	1961	–	–
1981	2017	2024	2037	–	–
2032	2068	2075	2088	–	–
2057	2093	2101	2113	–	–
2159	2195	2202	2215	–	–
2286	2322	2329	2342	–	–
2438	2474	2482	2494	–	–
2464	2500	2507	2520	–	–
2540	–	2583	–	–	–
2667	2703	2710	2723	–	–
2845	2880	2888	2901	–	–
3048	3084	3091	3104	3127	–
3150	–	–	3205	–	–
3251	3285	3294	3307	3330	–
3404	–	–	3459	–	–
3658	3693	3701	3713	3736	–
4013	–	4056	4069	4092	–
4115	–	4158	4171	4194	–
4394	–	4437	4450	4473	–
4572	–	4615	4628	4651	–
4953	–	4996	5009	5032	–
5334	–	5377	5390	5413	5426
6045	–	–	6101	6124	6137
6807	–	–	6863	6886	6899
7569	–	–	7625	7648	7661
8331	–	–	8387	8410	8423
9093	–	–	9149	9172	9185
9855	–	–	–	9934	9947
10617	–	–	–	10696	10709
12141	–	–	–	12220	12233
13665	–	–	–	13744	13757
15189	–	–	–	15268	15281
16713	–	–	–	16792	16805

Note All dimensions are in millimetres.
Courtesy Goodyear

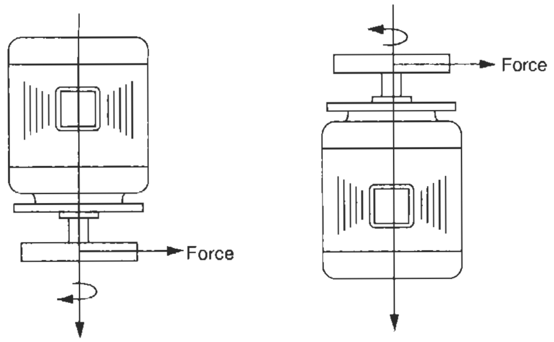

(a) W-adds (b) W-subtracts

Figure 8.13 Radial forces on the motor bearings

Table 8.10 Allowable pulley loads for standard motors

Frame size	*Poles*	*Load distance l*	*Maximum allowable load*	
		(mm)	*Radial P_r* (kg)	*Axial P_a* (kg)
80	2	25	44	20
	4		48	
	6		48	
	8		48	
90	2	31.5	42	25
	4		50	
	6		57	
	8		67	
100	2	40	62	35
	4		67	
	6		87	
	8		96	
112	2	50	90	40
	4		99	
	6		99	
	8		99	
132	2	62.5	126	50
	4		154	
	6		180	
160	2	70	200	70
	4		226	
	6		266	
	8		286	
180	2	80	214	80
	4		262	
	6		308	
	8		342	
200	2	100	290	100
	4		345	
	6		425	
	8		465	
225	2	100	275	100
	4		325	
	6		400	
	8		450	

Note The values given above refer to a bearing's life of 20 000 working hours. They are valid only for radial or axial loads. When both the loads are existing reference must be made to the bearing or motor manufacturer.

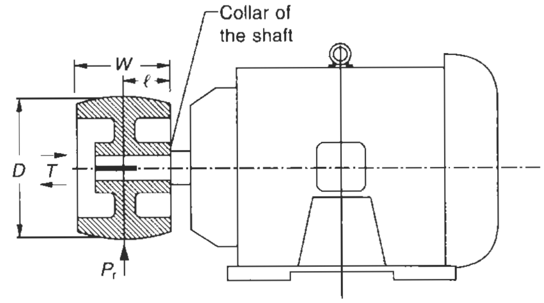

Figure 8.14 Forces acting on the motor shaft

Note Cylindrical roller bearings should normally not be used for such applications.

- When a bearing is subject to both radial and axial thrusts the equivalent dynamic bearing loading can be expressed by

  $P = X \cdot F_r + Y \cdot F_a$

  where
  X = radial load factor
  Y = axial load factor

  The values of these factors are provided by the bearing manufacturers in their catalogues, based on the ratios F_a/C_0 and F_a/F_r, where C_0 is the static load rating in kg or N (based on a contact stress of 4200 MP_a for ball bearings and 4000 MP_a for roller bearings, also provided in these catalogues. MP_a is the unit of stress in Mega-Pascals.

Note To assess the total force a bearing is likely to encounter more precisely, reference may be made to the bearing manufacturers' product catalogues. In severe load conditions, with an excessive bending moment on the shaft, the shaft stiffness and its suitability should also be checked. As shown in Table 8.10, motors for normal industrial use employ bearings with almost 20 000 hours as safe running life. For more stringent duties or continuous drives as in the pulp and paper industry, a cement plant, refinery and petrochemical projects, the chemical industry and powerhouses which are 24-hour services, special bearings must be used with a safe running life of 50 000 to 100000 hours.

8.6.2 Load-carrying capacity and life expectancy of bearings

The life of bearing would depend upon various factors such as:

- Type of drive
- Method of load transmission
- Accuracy of alignment
- Environment of installation
- The amount of radial and axial forces acting on the bearings or
- Any other factors discussed earlier.

No rotating mass can be balanced up to 0 micron, for obvious reasons. While rotating they are out of balance, which gives rise to rotating forces and adds to the radial load on the bearing. This indirectly affects the running life of the bearing, in addition to other factors noted above. The selection of type and size of bearing, is thus governed by the speed of the machine, the type and weight of loads and the required life of the bearing which can be expressed by

$$L_{10} = \frac{10^6}{60 \cdot N_r} \left(\frac{C}{P} \right)^p \text{ hours} \qquad (8.4)$$

where

L_{10} = Rated life of bearings at 90% reliability, i.e. 90% of bearings produced by a manufacturer will exceed this life

C = basic dynamic load rating in kg or N (provided by the bearing manufacturer). It is the load which will give a life of 1 million revolutions

P = equivalent dynamic bearing load in kg or N

p = exponent of the life equation, which depends upon the type of contact between the races and the rolling elements. It is recommended as 3 for ball bearings and 10/3 for roller bearings

N_r = speed of the machine in r.p.m.

With this equation the life of the bearing can be determined for different load conditions and is predetermined for the type of drive and service requirements. To select a proper bearing, therefore, the type of application and the loading ratio (C/P) should be carefully selected to ensure the required minimum life. Bearing manufacturers' product catalogues provide the working life of bearings for different load factors and may be referred to for data on C, C_0 and other parameters.

8.7 Suitability of rotors for pulley drives

In belt drives particularly, it is advisable that reference be made to the motor manufacturer to determine the suitability of the rotor shaft and the driving end (DE) bearing for transmission of the required load. A typical format of a questionnaire is also given below for providing the manufacturer for load, belt and pulley data. The format is suitable for all drives that may be subjected to excessive forces on the shaft. These data will enable the manufacturer to determine the following parameters to check the suitability of bearing and shaft strength and make suitable changes if warranted:

- Load acting on the motor bearings
- Bending moment at the motor shaft due to pulley and load
- Possible deflection of the shaft

Note The shaft deflection should not be more than 11% of the air gap between the stator and the rotor. For loads that exert more force and torsional stress on the motor shaft and bearings than is permissible, due to the larger width of pulleys which may shift the load farther away from the shaft collar, it is recommended that the pulley be mounted on a separate jack shaft, supported on two pedestals as illustrated in Figure 8.15. Provided that the motor shaft can be made longer, to support such a pulley and have sufficient strength, to take that load, one pedestal may also be adequate to support the free end of the motor shaft as shown in Figure 8.16. The pulley is now mounted between the shaft collar and the pedestal. A jack shaft or additional pedestal to support the motor shaft may also be necessary when the ratio of pulley diameters exceeds 6:1.

In some cases, reinforcement of the shaft by increasing the shaft diameter, employing a better grade of steel and using a superior grade of bearings, may also meet the load requirement. The bearing bore, however, may pose a limitation in increasing the shaft diameter beyond a certain point, say, beyond the diameter of the shaft collar. If a larger shaft diameter is required either a larger frame size of the motor may be employed, which may be uneconomical, or a jack shaft or pedestal may be used as noted above. Replacing standard bearings with larger bore bearings to use a shaft of greater diameter may not be possible in the same frame, due to pre-sized end shields and bearing housings which, for motors up to 250 kW, are normally cast and have fixed dimensions/moulding patterns.

Questionnaire to determine the suitability of the motor shaft and the bearing for the required belt drive

For critical loads and belt drives particularly, the user is advised to seek the opinion of the motor manufacturer to determine the mechanical suitability of the motor selected, its shaft and the DE bearing for the load to be transmitted, according to the drive system being adopted. The following are some important parameters that may help to determine

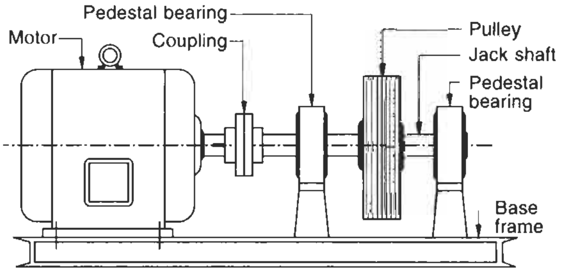

Figure 8.15 Arrangement of a jack shaft

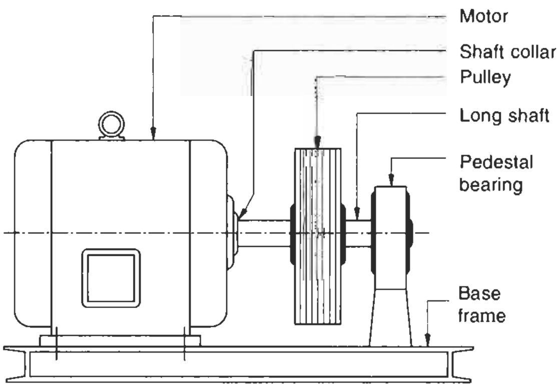

Figure 8.16 Arrangement of a long shaft

the required suitability and should be sent to the manufacturer for their opinion:

1 (a) Type of driven equipment
  (b) Type of bearings provided in the driven equipment
  (c) Whether any thrust or radial load is falling on the motor bearings from the driven equipment.

2 Details of the belt drive (Figures 8.17 and 8.18)
  (a) Type of belt: flat or V-belts and their width or numbers
  (b) Diameter of pulley on motor shaft D1 (mm)
  (c) Width of pulley on motor shaft W1 (mm)
  (d) Diameter of pulley on load side D2 (mm)
  (e) Width of pulley on load side W2 (mm)
  (f) Does the centre of the hub coincide with the centre of the rim of the pulley? If not, what is the eccentricity, *E*, in mm?
  (g) Distance between centres of pulleys, *C* (mm)
  (h) Weight of pulley on motor shaft (kg)
  (i) Magnitude of pulley force *P* (kgf or N)
  (j) Inclination β of the pulley system to the horizontal plane as shown in Figure 8.18.

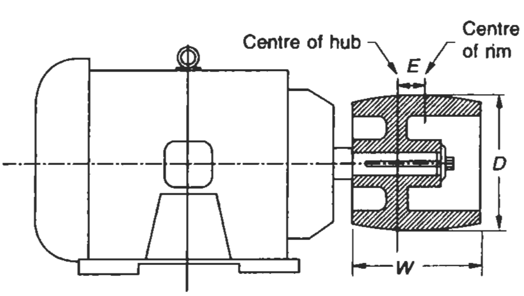

Figure 8.17 Mounting of motor pulley

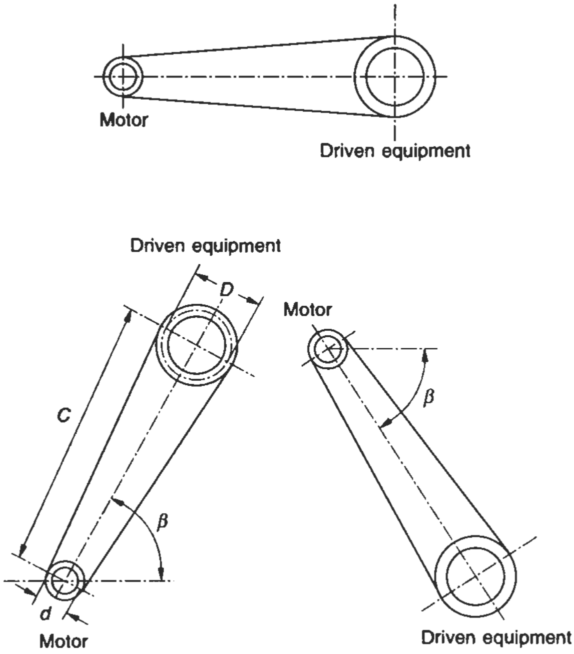

Figure 8.18 Disposition of driving and driven-end pulleys

Relevant Standards

IEC	*Title*	*IS*	*BS*	*ISO*
–	FLAT BELT Transmission belting friction and surface rubber belting – specifications	1370/1993	351	22
–	V BELTS Pulleys – V grooved for endless V-belts sections Z, A, B, C, D and E and endless wedge belt Sections SPZ, SPA, SPB and SPC – Specifications	3142/1993	3790/1995	4183
–	Endless V-belts for industrial purposes	2494-1/1994	3790/1995	4184
–	Industrial V-belt drives – calculation of power ratings			5292/1980
	Pulley and V ribbed belts for industrial applications– PH, PJ, PK, PL and PM profiles			9982/1998

Notes

1 In the tables of relevant Standards in this book while the latest editions of the standards are provided, it is possible that revised editions have become available. With the advances of technology and/or its application, the updating of standards is a continuous process by different standards organizations. It is therefore advisable that for more authentic references, readers should consult the relevant organizations for the latest version of a standard.

2 Some of the BS or IS standards mentioned against IEC may not be identical.

3 The year noted against each standard may also refer to the year of its last amendment and not necessarily the year of publication.

List of formulae used

Selection of flat belts

$$W = P \cdot \frac{\text{SF}}{\text{Correction for arc of contact}} \tag{8.1}$$

P = the load to be transmitted (kW)
W = maximum load transmitting capacity of the belt
SF = service factor

To determine the pitch length of V-belts

$$L = 2C + 1.57(D + d) + \frac{(D - d)^2}{4C} \tag{8.2}$$

L = belt pitch length (mm)
C = centre distance between the two pulleys (mm)
D = pitch diameter of the larger pulley (mm)
d = pitch diameter of the smaller (faster) pulley (mm)

Radial forces on bearings

$$P_r = \frac{K \cdot 973 \cdot \text{kW}}{N_r \cdot \frac{D}{2}} \pm \text{W kg} \tag{8.3}$$

K = belt factor
D = diameter of pulley (m)
W = Weight of complete rotor and driven masses on the motor shaft.

Load-carrying capacity and life of bearings

$$L_h = \frac{10^6}{60 \cdot N_r} \left(\frac{C}{P} \right)^p \text{ hours} \tag{8.4}$$

L_h = normal life of bearing in working hours
C = basic dynamic load rating (kg or N)
P = equivalent dynamic bearing load (kg or N)
p = exponent of the life equation
N_r = speed of the machine (r.p.m.)

9

Winding Insulation and its Maintenance

Contents

9.1 Insulating materials and their properties

The common types of insulating materials in use for electric motors are E and B for small motors and F for medium sized and large ones. General industrial practice, however, is to limit the temperature to class B limits, even if class F insulation is used.

Insulation class A, previously in use, has been discontinued in view of its low working temperature. Motor frames have also been standardized with class E insulation only by IEC recommendations, as in Table 1.2, to harmonize the interchangeability of electric motors. This decision was taken because class E insulation offers a higher working temperature and a longer working life. These frames also ensure optimum utilization of active materials such as copper and steel in a particular frame size. The classification of insulating materials is based on their maximum continuous working temperature, established for 20 years of working life. The recommended temperature according to IEC 60034-1 is, however, less than this, as shown in Table 9.1, to ensure an even longer life. Where the ambient temperature is likely to be high, of the order of 60°C or so during operation, such as close to a furnace, class F and H insulations are normally used, as they have higher working temperatures and thermal resistivity.

A brief description of the insulating materials in use for different classes of insulation is given below to provide an introduction to the types of materials being used in the preparation of a particular class of insulation. The actual ingredients may be an improvised version of these materials, in view of continuous research and development in this field, to search for still better and more suitable materials.

9.1.1 Insulation class A

This includes organic fibrous materials on a cellulose base such as paper, pressboard, cotton, cotton cloth and natural silk etc., impregnated with lacquers or immersed in an insulating liquid. The impregnation or immersion ensures that the oxygen content of the air does not affect the insulating properties or enhance the thermal ageing of the insulating material. Typical materials in this class are varnished cloth and oil-impregnated paper.

Table 9.1 Maximum/permissible working temperatures for different insulating materials

Class of insulation	*Maximum attainable temperature as in IEC 60085*	*Permissible operating temperature as in IEC 60034-1 by the resistance method*[a]	
		Up to 5000 kW	*Above 5000 kW*
	°C	*°C*	*°C*
A[b]	105	100	100
E[b]	120	115	110
B	130	120	120
F	155	145	140
H	180	165	165

[a] Using the thermometer method this temperature will be less by 10°C.

[b] These insulations are generally not used, for large motors, due to their low operating temperature.

9.1.2 Insulation class E

This includes wire enamels on a base of polyvinyl formal, polyurethane or epoxy resins as well as moulding powder plastics on phenol-formaldehyde and similar binders, with cellulose fillers, laminated plastics on paper and cotton cloth base, triacetate cellulose films, films and fibres of polyethylene terephthalate.

9.1.3 Insulation class B

This includes inorganic materials such as mica, glass fibre and asbestos etc., impregnated or glued together with varnishes or compositions comprising ordinary organic substances for heat resistance such as oil-modified synthetic resins, bitumen, shellac and Bakelite.

9.1.4 Insulation class F

This includes inorganic materials such as glass fibre and mica impregnated or glued together with epoxy, polyesterimide, polyurethane or other resins having superior thermal stability.

9.1.5 Insulation class H

This comprises composite materials on mica, glass fibre and asbestos bases, impregnated or glued together with silicone resins or silicone elastomer. These materials must not contain any organic fibrous materials such as paper or cloth backing, which is covered under class B and even F insulation systems.

9.2 Ageing of insulation

With time, the insulation becomes brittle and shrinks, leading to cracks. The insulation at the point of cracks weakens gradually as surrounding pollutants find their way through these cracks. The weakening of insulation with time is called 'ageing'.

The life of the insulation will also be affected by an excessive operating temperature. It is halved for every 11°C rise in temperature over its rated value and occurs when a machine is occasionally overloaded. Sometimes the size of the machine may be only marginal when it was initially chosen and with the passage of time, it may be required to perform duties that are too arduous. Every time the machine overheats, the insulation deteriorates, and this is called thermal ageing of insulation. Figure 9.1 illustrates an approximate reduction in life expectancy with a rise in operating temperature.

9.3 Practices of insulation systems

- *Insulation of steel laminations*
  (i) For smaller ratings: by steam bluing the steel surfaces on both sides.

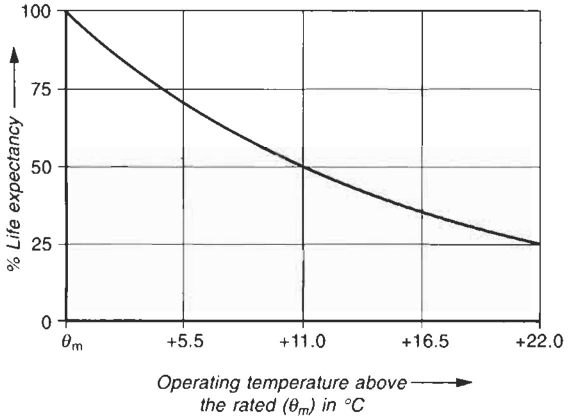

Figure 9.1 Reduction in life expectancy of a motor with a rise in operating temperature

(ii) For larger ratings: by phenol or synthetic resin insulation on one or both sides. Although insulation on one side is common, by ensuring that the laminations are always punched and stacked in one direction only to avoid contact between the punching burrs, insulation on both sides is always preferred.

- *Inisulation of the windings*
  Different manufacturers adopt different practices of insulating the coil or the windings. Practices generally used may be one of the following.

9.3.1 LT motors

Wound stator

- By simple impregnation in a recommended insulating varnish, normally synthetic or epoxy, followed by baking (curing), in a temperature-controlled oven, at a specified temperature for a specific period.
- For powerhouse insulation treatment the stator may be dipped in varnish for a minimum two to three times, each dipping being followed by backing. Sometimes one immersion of the entire stator and two additional immersions of the overhangs followed by backing may be sufficient.

Formed wound machines

For large motors, the practice is to wind the stator with formed coils (Figure 9.2). The coils are pre-formed and cured before insertion into the stator slots. They are insulated with resin-rich glass and mica paper tapes. The process of impregnation is therefore termed 'resin-rich' insulation. The completed formed wound stator is then heated to remove trapped moisture and finally impregnated in varnish class F or H as required, under vacuum and pressure. The stator is then cured in an oven as described above. The process of insulation and curing conforms to powerhouse insulation requirements. This practice facilitates easy removal of an individual coil at site in case of a damage and replacement with a spare coil. The user can stock spare coils for such eventualities.

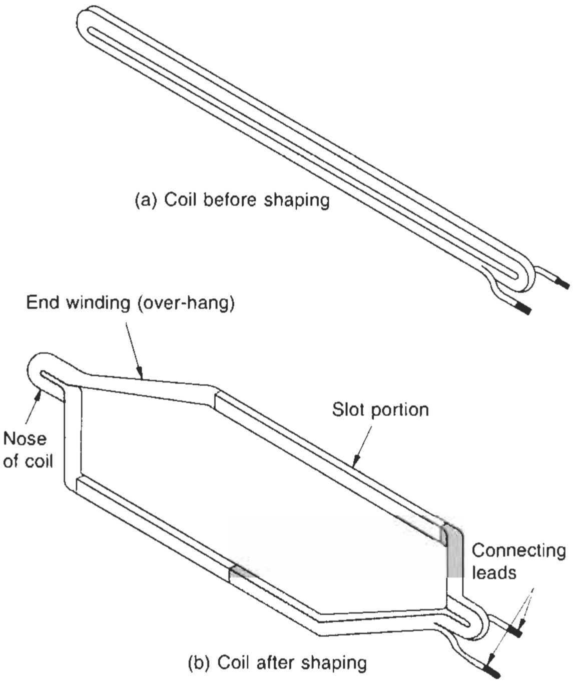

Figure 9.2 View of a formed coil

9.3.2 HT motors

To wind HT motors two methods are adopted:

1 *Formed wound machines*
This is a resin-rich system. The stator is wound with pre-formed coils on similar lines as noted above. After thorough testing on each coil for the polarization index and dissipation factor (tan δ), as discussed in Sections 9.5 and 9.6, and the impulse voltage withstand test, as discussed in Section 11.4.9, the individual coils are completely cured and toughened before inserting them into the slots. The rest of the process is as noted earlier.

2 *Vacuum pressure impregnation (VPI)*
For HT motors, the latest practice is to have the stator vacuum pressure impregnated (VPI) in insulating resins as a standard procedure, not only to meet the requirements of 'powerhouse insulation' but to also develop a more simplified insulating process, to cure and toughen the stator windings and to meet the severities of all operating conditions a motor may have to encounter. As described later, this is termed a resin-poor insulating process because the insulating tapes now have a low resin content as they are later to be impregnated in resin. Performance and field data of this insulating system have revealed excellent results,

surpassing those of the normal impregnating process and even the process of resin-rich formed coils. As an economy measure, the general practice of leading manufacturers is to adopt a resin-rich formed coil system for frame sizes smaller than 710 and resin-poor VPI for frame sizes 710 and higher. But it is always recommended to adopt a resin-poor system for all HT motor windings, irrespective of frame sizes.

In a pressure-vacuum impregnation system, since the whole stator iron bulk and the stator windings form a solid mass, removal of one coil and its replacement is impossible, unlike in the previous case. But in view of the excellent properties of a post-vacuum impreg-nated insulating system, the chances of any part of the stator winding developing an operational defect are remote. In all probability no such localized damage would arise over the life span of the motor. The windings may fail on account of a failure of the protective system to clear a fault or isolate the machine on a fault, but if the motor fails, the whole stator is scrap and a totally new stator has to be requisitioned. The rating of such motors is slightly less due to the reduced cooling effect.

Bracing of the coil ends (overhangs)

The coil ends must be rigidly supported and adequately braced with binding rings or tapes to prevent their movement and also absorb shocks and vibrations during excessive overloads, starting inrush currents (I_{st}), and voltage surges.

9.4 Procedure for vacuum pressure impregnation (with particular reference to HT motors)

In a formed coil system each individual coil is pre-formed, insulated and cured, and is made rigid before it is inserted into the slots. The dielectric qualities of the coil insulation are monitored closely during the process of coil formation to ensure the required quality. For procedure and acceptance norms see Section 11.4.9.

In the post-impregnated system, although the coils are formed as above, they are inserted into the slots when they are still in a flexible state. They are now easy to handle and cause no damage to their own insulation or the insulation of the slots while being inserted into the slots. The process up to the winding stage of the stator is thus faster and economical. The stator is then vacuum dried to remove trapped moisture, followed by immersion in a resin bath. It is kept immersed under vacuum so that resin can fill the voids. The bath is then pressurized to compress the resin so that it penetrates deeply into the slots, crevices and voids. Figure 9.3 illustrates the lowering of a stator's pre-formed windings into a resin impregnating tank. The stator is then cured in an oven under controlled conditions. The overall vacuum impregnating system may be expensive in view of the equipment required to dip the bulk of the stator into the impregnating resin to create a very high vacuum, but the excellent properties of post-vacuum impregnation may compensate this initial cost.

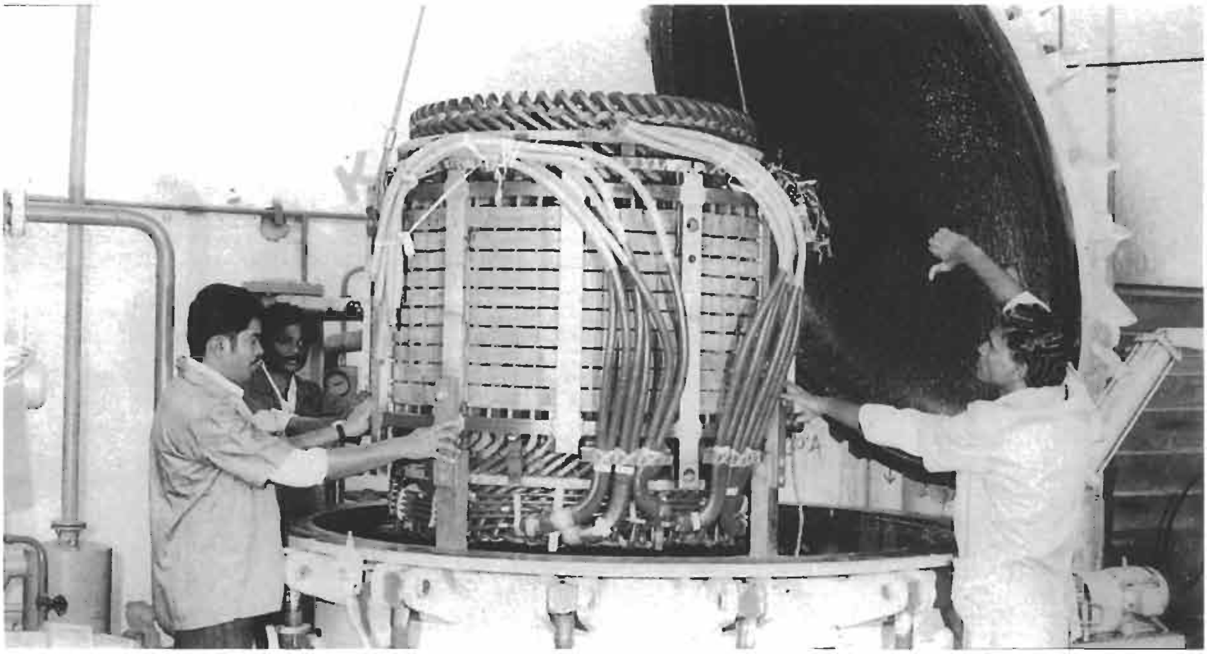

Figure 9.3(a) A stator core during vacuum pressure impregnation (resin-poor insulation) (Courtesy: NGEF Ltd)

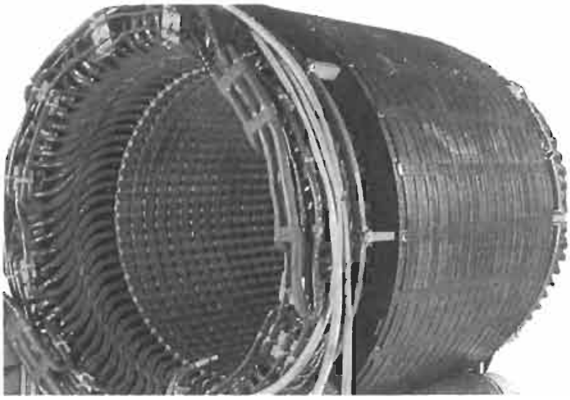

Figure 9.3(b) Stator core after vacuum pressure impregnation (VPI)

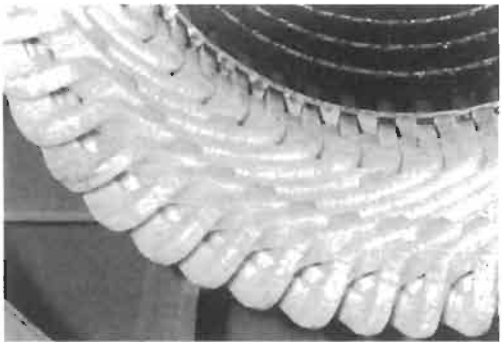

Figure 9.3(c) Exploded view of a VPI stator core

Note For HT motor windings, ordinary dipping and baking, as for LT motors, is not recommended in view of the very high stresses to which the windings may be subject during switching or while clearing a fault, or in the event of a system disturbance. See also Section 17.5. An ordinary cured motor winding may not be able to withstand these conditions.

Repairing technique

Generally, no electrical fault would cause damage to the windings except in the event of failure of the protective system. Mechanical surface damage is, however, possible during transportation or installation or due to penetration of foreign matter into the windings. It is possible to repair such damage at site without affecting the performance or quality of the winding insulation. The excellent electrical, mechanical and thermal properties of the end turn windings localize such damage. Repair is possible by slicing and cleaning the damaged part, and applying to it the pre-impregnated insulating tapes and other resins. It is recommended to request the manufacturer to carry out such repairs.

Note For motors that are insulated other than by vacuum impregnation, it is recommended to rewind a damaged stator with class F insulation, even if the original insulation was E or B. This is to achieve a better life of the repaired motor, on the one hand, and facilitate an easy rewinding of the machine, on the other, as class F is a thinner insulation which is easy to rewind at site.

9.5 Maintenance of insulation

9.5.1 Against insulation failure

The properties of an insulating material are greatly affected by moisture, temperature, repeat overvoltages, and chemical vapour. Care must be taken to avoid these harmful effects to achieve prolonged life of the machine.

Whenever a motor is installed in a humid atmosphere and is switched on after a long shutdown, insulation resistance must be checked before energizing the motor. As a precaution, insulation resistance must be checked before a restart after a long shutdown, even in temperate conditions. If the insulation level is found to be below the recommended level as shown in equation (9.1) it must be made up as noted below.

9.5.2 Making-up the insulation level

This can be done by homogeneously warming and drying the windings in the following way:

1. A crude method can be to set up two lamps at both ends of the stator housing after removing the end shields. This can be done in smaller motors, say, up to '355' frame sizes.
2. By circulating roughly 50–60% of the rated current under a locked rotor condition, at a reduced voltage. To facilitate easy escape of the moisture to the atmosphere, the bearing covers may be removed.
3. At important installations, built-in heaters are recommended which can be switched ON when the motor is not in use. The rating of these heaters, known as space heaters, is such that a continuous 'ON' heater will not have any harmful effects on the motor windings, nor will they increase the winding temperature beyond the safe limits. The rule of thumb is to set the space heater rating so that it is able to raise the inside temperature of the motor by 8–10°C higher than the ambient. Its main function is to keep the moisture condensation away from the windings by maintaining a higher temperature inside the motor housing.

In certain cases, where the motor is too large and it is idle for a long period before it is installed and electrically connected (the space heaters are therefore OFF) even these heaters may not be sufficient to absorb moisture which might have condensed deep in the slots, unless, of course, the heaters are kept ON for a considerably long period. In such cases, it is advisable to heat the motor by methods 1 and 2 in addition to using the built-in heaters, until the insulation level of the windings reaches the required level. Once the motor has been installed, these space heaters, when provided in the windings, are switched ON automatically as soon as the motor is idle, and thus eliminate deep moisture condensation.

9.5.3 Making-up of the insulation level in large machines (1000 kW and above)

IEEE 43 places special emphasis on determining the insulation condition of such machines before energizing and even before conducting a high-voltage test. This can be determined by the insulation test as noted below.

Insulation resistance test

Insulation resistance of the windings is a measure to assess the condition of insulation and its suitability for conducting a high-voltage test or for energizing the machine. A low reading may suggest damage to the insulation, faulty drying or impregnation or absorption of moisture. The insulation resistance may be measured according to the procedure laid down in IEEE 43 between the open windings and between windings and the frame by employing a direct-reading ohm meter (meggar). The ohm meter may be hand-operated or power-driven or equipped with its own d.c. source. 500 V d.c. is the recommended test voltage for an insulation resistance test for all voltage ratings, as noted later. The recommended minimum insulation resistance of the machine is obtained by the following empirical formula:

$$R_m = kV + 1 \tag{9.1}$$

where

R_m = recommended minimum insulation resistance in MΩ (meg ohms) of the entire machine windings, at 40°C or 1 MΩ per 1000 V plus 1 MΩ, and

kV = rated machine voltage in kV

The winding insulation resistance to be used for comparison with the recommended minimum value (R_m) is the observed insulation resistance obtained by applying a d.c. voltage to the entire windings for one minute, corrected to 40°C. In practice, motors having insulation resistance readings as high as ten to a hundred times the minimum recommended value R_m are not uncommon.

At site, when commissioning a new or an existing motor after a long shutdown, it must have a minimum insulation level according to equation (9.1). An 11 kV motor, for instance, must have a minimum insulation of 12 MΩ. In normal practice, it is observed that when first measured the resistance reading may show more than the minimum value and may mislead the operator, while the winding condition may not be adequate for a high-voltage test or an actual operation. One must therefore ensure that the winding condition is suitable before the machine is put into operation. For this purpose, the polarization index (PI), which is determined from the insulation test data only as noted below, is a useful pointer. It must be evaluated at site while conducting the insulation test then compared with the manufacturer's reference data for the machine to assess the condition of insulation at site and its suitability for operation. This is usually a site test, but to establish a reference record of the machine, it is also carried out at the works on the completed machine and test records furnished to the user.

Polarization index

This is the ratio of 10 minute to 1 minute insulation resistance readings. It will not be less than 1.5 for class A, 1.75 for class E and 2 for class B insulations for the windings to be regarded as suitable for a high-voltage test or actual operation. This index is based on the phenomenon that the insulation resistance of a winding rises with the duration of application of the test voltage. The rise is rapid when the voltage is first applied and then it almost stabilizes with time, as noted in Figure 9.4. For instance, after 30 seconds of the applied voltage this resistance may be too small, of the order of only a fraction of the final value. As a rough guide, the insulation resistance of a dry and normal winding may also continue to rise in the first few minutes after application of the test voltage before it stabilizes. Normally it may take 10–15 minutes to reach a steady state. If the windings are wet or dirty the steady condition may be achieved within one or two minutes of application of test voltage.

These test results are then compared with similar test data obtained from the manufacturer on similar windings carried out during manufacture. If the manufacturer's original test results are available, the results obtained at site can be quickly compared and the condition of the insulation assessed easily and accurately. If the test facility to obtain test results at 1 minute and 10 minutes is not available, the results may also be obtained for 15 seconds and 60 seconds and a graph plotted as shown in Figure 9.5(a) to determine the polarization index.

From these insulation tests several test data for 1 minute and 10 minutes can be obtained during the process of heating over a few hours and a graph plotted for time versus insulation resistance. This graph is of great assistance in determining the state of the windings before energizing. Heating or cleaning-up of the windings should continue until the polarization index matches the reference value

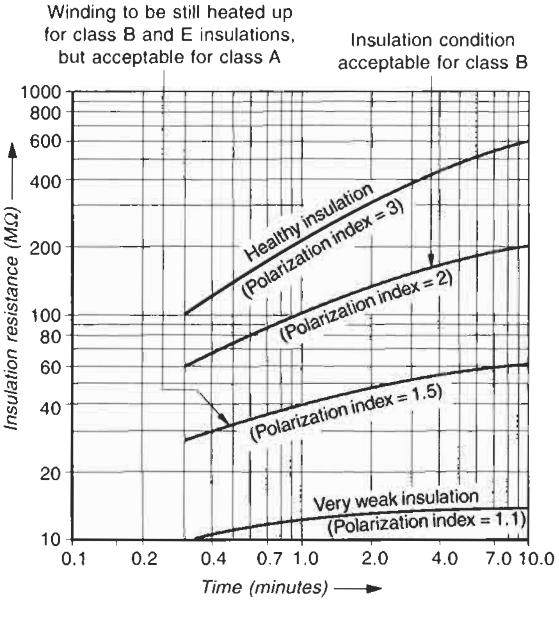

Figure 9.4 Variation of insulation resistance with time for class B insulation

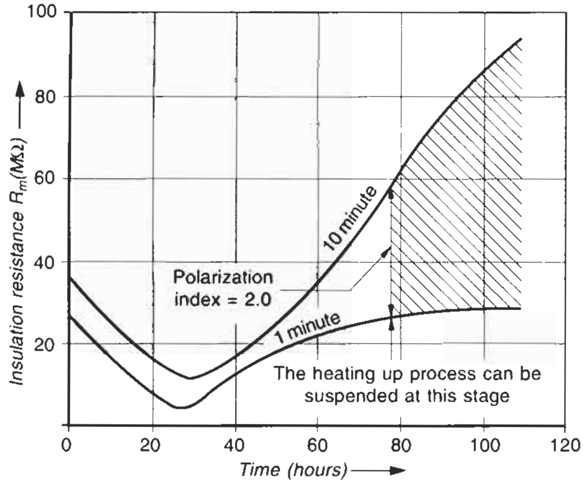

Initial winding temperature – 25°C
Final winding temperature – 75°C

Figure 9.5(a) Typical values of 1- and 10-minute insulation resistances during the drying process of a class B insulated winding of a large machine

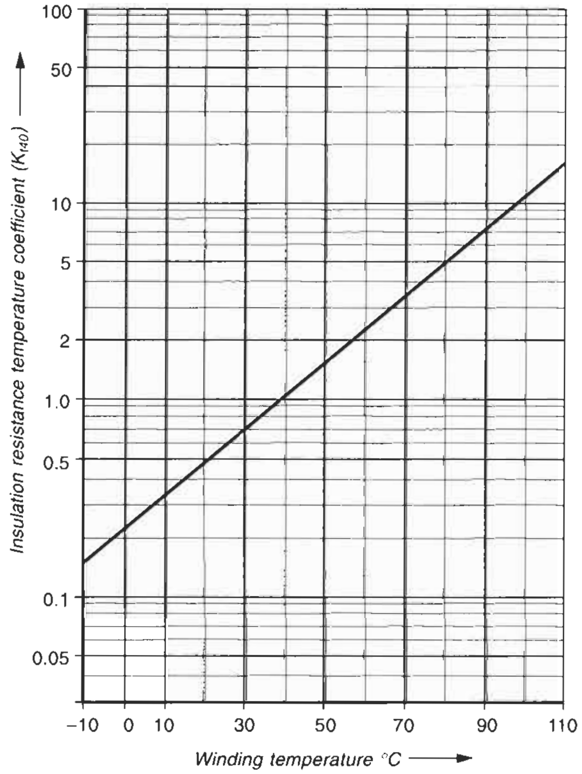

Figure 9.5(b) Approximate temperature coefficient of insulation resistance of rotating machines

or reaches a minimum of 1.3 for all classes of winding insulation. Only then can the windings be considered suitable for a high voltage-test or actual operation.

Important aspects while measuring R_m at site

1 It will generally be seen that the insulation resistance will first fall to a very low level before rising, the reason being that when heating begins, moisture in the windings is redistributed in the stator windings. It may even reach the dry parts of the machine and indicate a very low value. After some time the insulation resistance will reach its minimum and stabilize at this level, before it begins to rise again and reach its maximum. See also the curves of Figure 9.5(a).

2 The insulation resistance thus measured at different intervals during the process of heating up will represent the insulation resistance of the windings at that temperature. Before plotting the curves, these test values must be corrected to one reference temperature, say, 40°C, to maintain coherence in the test results.

3 To correct the value of insulation resistance at 40°C the following equation may be used:

$$R_{40} = K_{t40} \cdot R_t \tag{9.2}$$

where

R_{40} = insulation resistance in MΩ corrected to 40°C.
R_t = test insulation resistance in MΩ at t °C and
K_{t40} = temperature coefficient of insulation resistance at t °C.

4 The temperature coefficient curve is given in Figure 9.5(b). This is plotted on the assumption that the insulation resistance doubles for each 18°C reduction in temperature (above the dew point).

5 The test voltage should be d.c. and restricted to the rated voltage of the windings, subject to a maximum of 5000 V d.c. for a 6.6 or 11 kV motor. Application of a higher voltage, particularly to a winding which is weak or wet, may cause a rupture of the insulation. It is therefore recommended to carry out this test only with a 500 V d.c. meggar. Accordingly, it is the practice to conduct this test at the works also on a normal machine, at 500 V d.c. only to provide consistency of reference.

6 The insulation resistance of the windings, R_m, can be calculated by

$$R_m = \frac{\text{Test voltage in volts}}{\text{Leakage current in } \mu A} \text{M}\Omega \tag{9.3}$$

Depending upon the condition of the winding insulation, an increase in the test voltage may significantly raise the leakage current and decrease the insulation resistance, R_m. However, for machines in very good condition, the same insulation resistance will be obtained for any test voltage up to the rated voltage. The insulation resistance may hence be obtained with a low voltage initially and if the condition of the windings permits, may be raised, but always less than the rated and in no case more than 5 kV, irrespective of the rated voltage.

7 Before conducting the insulation test one should ensure that there is no self-induced e.m.f. in the windings. It is recommended that the windings be totally discharged by grounding them through the frame of the machine before conducting the test.

8 Winding connections for insulation resistance test
- It is recommended to test each phase to ground separately with the other phases also grounded. This is because the insulation resistance of a complete winding to ground does not provide a check of the insulation condition between the windings.
- It is observed that the insulation resistance of one phase with the other two phases grounded is approximately twice that of the entire winding. Therefore, when the three phases are tested separately, the observed value of the resistance of each phase is divided by two to obtain the actual insulation resistance.

9.6 Monitoring the quality of insulation of HT formed coils during manufacturing

9.6.1 Theory of dielectric loss factor or dissipation factor (tan δ)

Irrespective of the class of an insulation system and its quality, it will have some leakage current through its dielectric circuit on application of a high voltage. For all practical purposes, therefore, we can consider an insulation system as an imperfect capacitor.

During the process of insulation, impregnation of an individual coil (resin-rich)[*] or the whole winding (resin-poor),[†] some voids in the insulation coating will always exist. They cannot be eliminated, however good the process of insulation coating or impregnation. While the ideal requirement will be a completely void-free insulation coating/impregnation, in practice this cannot be achieved. These voids cause internal discharges (corona effect)[‡], or leakage current within the windings and leads to erosion in soft materials, or microscopic cracks in hard ones. All this may also lead to an eventual failure of the insulation. The level of such discharges/leakage currents should therefore be restricted as much as possible, so that they cause the least harm to the insulation of the windings, during the machine's long years of operation. For an illustration of the leakage current circuit, see Figures 9.6 and 9.7.

By measuring the capacitive and leakage currents, the phase angle (loss angle) δ between them can be determined. The tangent of this angle, tan δ, will give an indication of the condition of insulation:

In a capacitor, $\delta = 90 - \phi$ and

$$\tan\delta = \frac{\text{Capacitor losses}}{\text{Reactive output of the capacitor}} = \frac{i_r}{i_c}$$

(Figure 9.7)

A low tan δ will mean a high degree of resin cure. Most insulation systems are composites of many materials. In practice, they almost always contain small voids. Consider a coil side with a single void. The voltage distribution across the insulation will be non-uniform, due to different permittivities of air and insulation. When a low voltage is applied, a proportion of this will appear across the

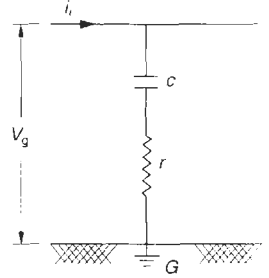

c = Leakage lumped capacitance
r = Leakage lumped resistance
i_l = Leakage current
V_g = Voltage to ground (phase voltage)

Figure 9.6 Representation of leakage current in an HT insulation system

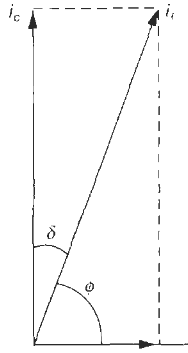

$$\tan\delta = \frac{i_r}{i_c} \approx \frac{i_r}{i_l}$$

Figure 9.7 Phasor representation of the leakage current

---

[*] *Resin-rich*

This is an insulating process for winding of HT motors with formed coils, and employs class F insulating materials. The winding coils are built individually, outside the slots and are pre-impregnated and cured before they are inserted into the stator or rotor slots. This system of coil making, however, possesses a poor heat transfer capability, from coil to iron core and provides a poor bonding of the coil with the slot. This may cause differential movement inside the slot during a run, due to thermal effects, and a peeling of the insulation, in addition to vibration and noise.

[†] *Resin-poor*

This is when the stator or the wound rotor is first wound with resin-poor formed coils, and then vacuum impregnated, as a whole mass and cured.

[‡] *Corona effect*

This is a discharge that occurs due to ionization of the air in the immediate vicinity of a conductor. It normally takes place on round conductors or at curvatures, rough spots, protruding nuts and bolts, and occurs due to humidity at locations where there is a large electrostatic flux, such as between two parallel running and current-carrying conductors. The higher the potential between the conductors, the more severe this phenomenon will be. It is a purple glow around the conductor, and is normally associated with a hissing noise and causes losses. We can sometimes see this phenomenon on an HT power pole and more so on a humid day. To minimize this effect, it is essential to keep the conductor surface clean, avoid sharp bends and curvatures and also jagged nut and bolt heads. Where unavoidable, such surfaces may be covered (insulated) with a non-conducting tape or tube.

void and the remaining voltage across the insulation (dielectric). When the applied voltage is increased, the air of the void at a certain value of the applied voltage will break down, causing an internal discharge. The void is now short-circuited and the full voltage will appear across the insulation (dielectric). The tan δ – voltage curve at this point, where ionization begins, shows a rapid change (Figure 9.8). In practice, an insulation system, whether of a coil, winding or a slot, will always contain many small voids, often located at different depths of the dielectric. The higher the number of voids, the steeper will be the tan δ–V curve beyond a certain voltage level (Figure 9.8). The value of tan δ at low voltage and the rate of change of tan δ, i.e Δ tan δ, with an increase in the applied test voltage, gives an indication of the condition of the dielectric at higher test voltages, and also suggests the presence of moisture. Hence, Δ tan δ is a measure of voids in the insulation system and indicates the quality of curing. It is also a good method of monitoring the quality of insulation of HT formed coils during the course of manufacture. This is also useful in analysing the ageing condition of an insulation. The methods and norms of acceptance limits are dealt with in IEC 60894. For acceptance norms see Table 11.5.

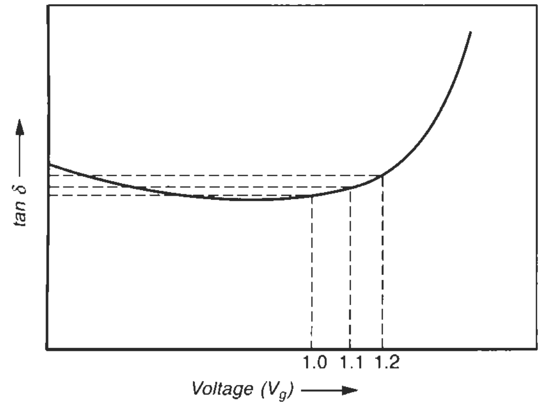

Figure 9.8 Variation in tan δ with the applied voltage

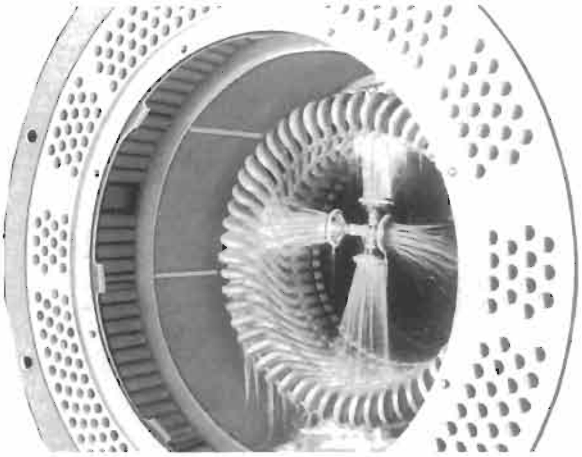

Figure 9.9 A NEMA spray test being carried out on a stator winding (Courtesy: BHEL)

9.6.2 Wet test of resin-poor windings

MG-1-20.48 recommends this test for large HT motors that are resin-poor. In this test the whole stator is submerged in water, if possible, and a 10-minute absorption test is carried out. If this is not possible, then the windings are sprayed with water thoroughly, from all sides for 30 minutes (Figure 9.9). The water is mixed with a wetting agent to reduce its surface tension. During the last 10 minutes of the test the insulation resistance is measured at 500 V d.c, which should not be less than as indicated in equation (9.1). If it is acceptable, the windings are then subjected to an a.c. high-voltage test at 1.15 times the rated voltage for 1 minute while the windings are still being sprayed. After the high-voltage test, the 1 minute insulation resistance reading using a 500 V d.c. source is obtained. This should not be less than as specified in equation (9.1). This value will then form the reference data for the site tests.

Relevant Standards

IEC	*Title*	*IS*	*BS*
60034-1/1996	Rotating electrical machines Rating and performance for rotating machines	4722/1992, 325/1996	BS EN 60034-1/1995
60071-1/1993	Insulation coordination. Definitions, principles and rules	2165 (Part-I) 1991 and 2165 (Part-II) 1991	BS EN 60071-1/1996
60085/1984	Thermal evaluation and classification of electrical insulation	1271/1990	BS 2757/1994
60894/1987	Specification for the insulation of bars and coils of high voltage machines, including test methods	–	BS 4999-144/1987

Relevant US Standards ANSI/NEMA and IEEE

ANSI/IEEE1313.1/1996	Insulation Coordination. Definitions, Principles and Rules
ANSI/IEEE-1/1992	General principles for temperature limits in the rating of electric equipment and for the evaluation of electrical installation
ANSI/IEE 101/1987	Guide for the statistical analysis of Thermal Life Test data
NEMA/MG.1/1993	Motor and generators ratings, construction, testing and performance

Notes

1 In the tables of relevant Standards in this book while the latest editions of the standards are provided, it is possible that revised editions have become available. With the advances of technology and/or its application, the updating of standards is a continuous process by different standards organizations. It is therefore advisable that for more authentic references, readers should consult the relevant organizations for the latest version of a standard.

2 Some of the BS or IS standards mentioned against IEC may not be identical.

3 The year noted against each standard may also refer to the year of its last amendment and not necessarily the year of publication.

List of formulae used

Making-up of insulation level in large machines:
Insulation resistance

$$R_m = \mathrm{kV} + 1 \qquad (9.1)$$

R_m = recommended minimum insulation resistance in $M\Omega$ of the entire machine windings, at 40°C
kV = rated machine voltage in kV.

$$R_{40} = K_{t40} \cdot R_t \qquad (9.2)$$

R_{40} = insulation resistance in $M\Omega$ corrected to 40°C
R_t = test insulation resistance in $M\Omega$ at t °C and
K_{t40} = temperature coefficient of insulation resistance at t °C

$$R_m = \frac{\text{Test voltage in volts}}{\text{Leakage current in } \mu\text{A}}\ \mathrm{M\Omega} \qquad (9.3)$$

Further reading

1. Ansaldo Componenti SPA. Italy. *Progress and development trends in the large induction motor stator winding insulation.*
2. Hogg, W.K., Miller, R., Rabach, G. and Ryder D.M. 'The relationship of partial discharge amplitude distribution with electric damage at different levels of voltage and frequency', *IEEE Symposium on Electrical Insulation*, USA, June 1984.
3. Lee-Neville•, and Simons J.S., *Handbook of Epoxy Resins*, McGraw-Hill, New York (1967).
4. Meyer, H., 'Post impregnated micalastic insulation for large motors and generators,' *Siemens Review*, **XLV** April, No. 4 (1978).
5. Moses, G.L., *Electrial Insulation*, McGraw-Hill New York (1951).
6. Moses, G.L., 'Alternating and direct voltage endurance studies on mica insulation for electric machinery,' *AIEE Transactions*, **70**, 763–769 (1951).
7. Renganian, S., Agrawal, M.D. and Nema R.S., 'Behaviour of high voltage machine insulation system in the presence of thermal and electrical stresses,' *IEEE Trans. on EI.*, E.I., 20, No.1, Feb. (1985).
8. Rhudy, R.G. *et al.*, 'Impulse voltage strength of AC rotating machines,' *IEEE Trans.*, **100**, No. 8 (1981).
9. Simons, J.S., 'Diagnosis of H.V. machine insulation.' *IEEE Proceedings*, **127**, May (1980).

10

Installation and Maintenance of Electric Motors

Contents

One can adopt a suitable procedure of installation, grouting, type of foundation and alignment etc., depending upon the size of motor, the duty it has to perform and the location of the installation (such as hazardous or seismic, etc.). Here we discuss briefly only the important aspects of installation and maintenance of electric motors.

10.1 Installation of bearings and pulleys

Special care needs be taken when mounting or removing the pulley or the bearing from the motor shaft. Carelessness in using a correct procedure or proper tooling may be detrimental to the bearing's life. It may even damage the end shield of the motor at the other end. Any hammer blows on the bearing, directly or indirectly, can cause irreparable damage to the bearing and the end shield at the other end of the motor. In view of a bearing's delicate nature, the following methods are recommended to carry out such tasks.

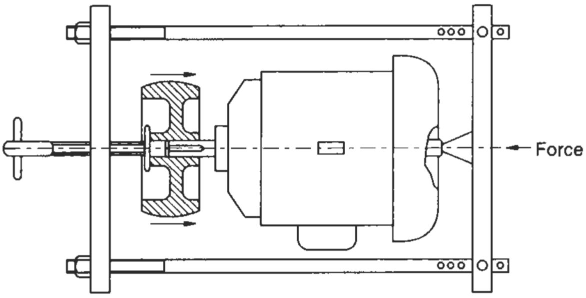

Note The jig can also be motor operated

Figure 10.1 Mounting of the pulley

Mounting of a bearing or a pulley

Bearings up to medium sizes can be driven on the shaft seat with the aid of a tubular drift, supported on the inner race of the bearing, then by hammering it gently with a mallet, to transmit the blows at the other end to a rigid support. For large motors or pulleys, however, a fixture as shown in Figure 10.1 can be used. The purpose of this fixture is to grip the inner race of the bearing and cause no thrust on the balls or the rollers of the bearing. ISO 286-1 recommends the tolerances and fits for pulley bores and these may be followed for an ideal fit. Table 10.1 gives tolerances in the pulley bore for different shaft diameters and Table 10.2 those in the bearing housing (end shield) bore diameter, where the bearing's outer race fits, as well as the motor shaft diameter, on which the inner race of the bearing is mounted. The bearing fits are thus governed by the dimensional tolerances permissible for the end shield bore diameter and the diameter of the motor shaft. These are called tight fit or shrink fit. It may be seen that any slip between the end shield bore and the outer race of the bearing or the diameter of the motor shaft and the inner race (bore) of the bearing, during transmission of load, may cause undue heating, vibrations and noise. This may also adversely, influence the efficiency of power transmission, and cause severe damage to the bearing inner and outer races, the shaft and the bearing housing (end shield) due to friction, abrasive wear, fretting, corrosion and cracks. All these effects must therefore be eliminated by a proper fit in all mating parts.

Dismounting of a bearing or a pulley

A claw-type puller, as shown in Figure 10.2, with adjustable jaws must be used when pulling out the bearing or the pulley from its seat. The claws are so set that they do not bear against the outer ring of the bearing while

Table 10.1 Shaft diameter, its tolerance and pulley bore size

Shaft diameter (mm)	*Tolerance*	*Value of tolerance* (mm)	*Tolerance for pulley bore H7*[a] (microns)	*Bore size* (mm)
9	JS6	±.0045	+ 15	9.015
11	JS6	± .0055	+ 18	11.018
14	JS6		+ 18	14.018
19	JS6	± 0.0065	+ 21	19.021
24	JS6		+ 21	24.021
28	JS6		+ 21	28.021
38	K6	+ 0.018	+ 25	38.025
42	K6		+ 25	42.025
48	K6		+ 25	48.025
55	m6	+ 0.030	+ 30	55.030
60	m6		+ 30	60.030
65	m6		+ 30	65.030
75	m6		+ 30	75.030
80	m6		+ 30	80.030
90	m6	+ 0.035	+ 35	90.035

[a] There is no lower limit of tolerance in holes.
1 micron = 0.001 mm (1μm).
Note: For larger sizes refer to ISO 286-1 or IEC 60072-2.

Table 10.2 Shaft and bearing housing diameters and their tolerances, to provide a tight or shrink fit to the bearings

Deep groove ball bearings		*Cylindrical roller bearings*	
(A) Shaft diameter	*Tolerance*	*(A) Shaft diameter*	*Tolerance*
Up to 18 mm	j_5	Up to 40 mm	k_5
Above 18–100 mm	k_5	Above 40–160 mm	m_5
Above 100–160 mm	m_5	Above 160–200 mm	n_5
(B) Housing bore diameter		*(B) Housing bore diameter*	
All sizes	h_6 or j_6	All sizes	h_6 or j_6

Based on ISO 286-1

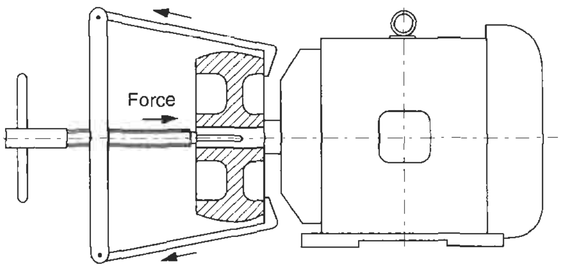

Note The jig can also be motor operated

Figure 10.2 Dismounting of the pulley

pulling out and thus exert no thrust on the balls or the rollers of the bearing. Figure 10.3(a) and (b) illustrate the correct method.

10.2 Important checks at the time of commissioning

- Clean up the motor.
- Check all the components for their positioning and tightness.
- Check for pre-lubrication/grease and its monitoring attachment (provided in large machines).
- Check for free rotation of the rotor.
- Check for motor grounding.
- Check for winding insulation.

Additional checks for large motors

- Check for proper connection and circulation of fluid or gas in the coolant circuit (Section 1.16).
- Check for satisfactory operation of auxiliary oil pump and fan.
- Check all safety devices such as temperature sensors in the windings and the bearings, PTC thermistors, vibration probes, space heaters and coolant circuit, for their correct fitting, wiring and functioning of the alarm, annunciation and tripping circuit of the protective switchgear (Section 12.8).

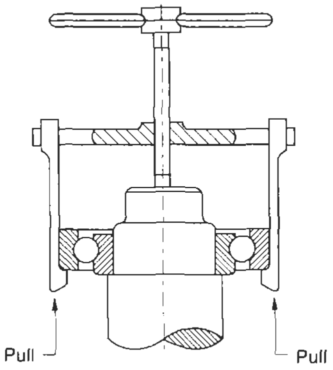

Figure 10.3(a) Wrong method of dismounting the bearings, as the forces travel through the balls

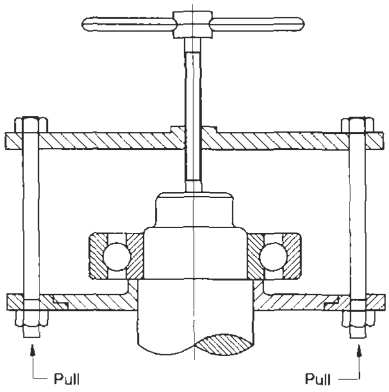

Figure 10.3(b) Correct method of dismounting the bearings

- Check for satisfactory functioning of all gauges, indicators and recorders.
- Check for bearing insulation (dealt with separately in Section 10.4.5).
- Check for bearing housing grounding.
- Check for winding insulation by polarization index (Section 9.5) and dissipation factor, tan δ (Section 9.6)

10.3 Maintenance of electric motors and their checks

Only important aspects have been considered here:

- Protected-type motors, located in dusty environments, should be blown out periodically with clean and dry air. Replace the motor, if possible.
- Check the protective equipment for any worn parts or contacts and their tightness.
- Check the condition of the cable insulation, its termination and jointing. Motor connections should always be made

through cable lugs to ensure a proper grip as shown in Figure 10.4. A poor cable termination will mean arcing and localized heat and may lead to joint failure.

- For oil-filled control equipment such as autotransformer starters or oil circuit breakers (BOCBs or MOCBs, Chapter 19), insulating oil should be checked periodically for its insulating properties. Leading manufacturers of this equipment indicate the number of switching operations under different conditions of load and fault, after which the oil must be replaced and these must be followed.
- Each electric motor and connected control gear is grounded separately at least two points. The ground resistance should be checked to ensure continuity of ground conductors. Refer to Chapter 21 for more details on grounding requirements.
- Insulation resistance of the motor windings between phases and phase to ground should be checked and made up in the event of deficiency, according to Section 9.5.
- Slip-ring motors need a regular and meticulous check of brushes, brush holder unit and slip-rings for cleanliness, accurate contacts, brush curvature, wear and tear of slip-rings and arcing (Figure 10.5). The following procedure may be followed:
  - Spring pressure to be maintained around 150–200 g/cm^2 for proper contact of the brushes with the slip-rings.
  - Cleanliness of slip-rings and the brushes.
  - Slip-rings, if roughened by arcing, must be cleaned with fine glass paper, having a similar curvature to the rings using a wooden block on which the glass paper can be wrapped. Emery cloth should not be used.
  - When replacing with the new brushes, the new brushes must be first ground to acquire a curvature similar to that of the rings.
  - Brush lifting and short-circuiting devices can be employed for motors required to run continuously for a long period to minimize wear and tear of slip-rings and brushes. However, when speed control is required or switching operations are frequent, continuous contact brush gear assembly must be employed.

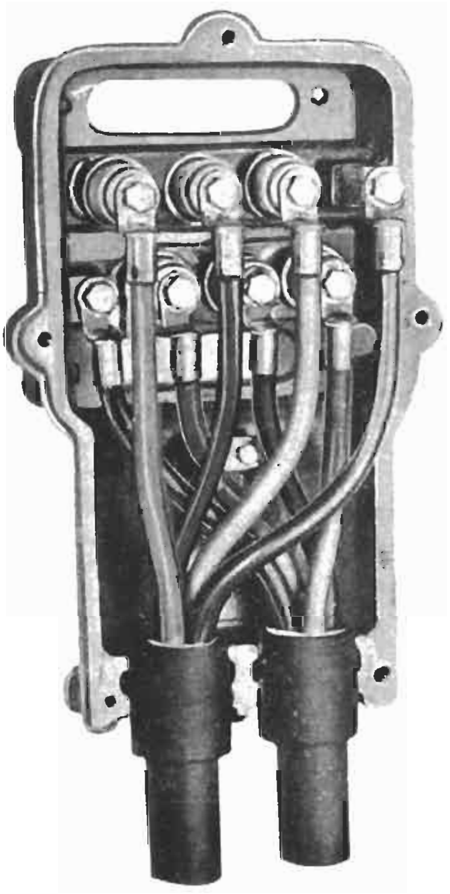

Figure 10.4 Connection of cables in motor terminal box through cable lugs

10.4 Maintenance of bearings

Grease may leave skin effect on the races of the bearings if the motor is stored idle for a long period. This may cause noise during operation and overheating of the bearings. After a long period of storage grease may also dry and crack, and produce these effects. To detect this, bearing covers may be opened and the condition of the grease and any skin effects checked. If such marks are visible, the bearings must be taken out and washed thoroughly in petrol or benzene to which is added a few drops of oil, and then re-greased with a recommended grade and quantity of grease. Quantities of grease above recommended levels may cause heat the same way as quantities below recommended levels.

Recommended brands and grades of lithium-based rust-inhibiting bearing grease conforming to IS 7623 are given below:

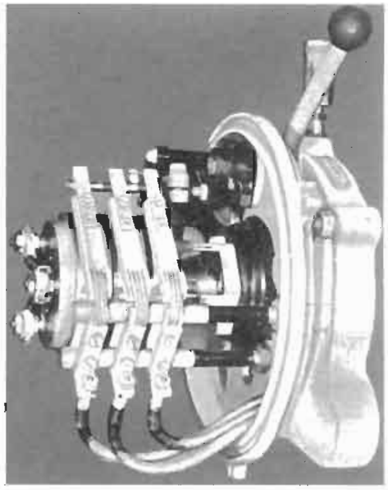

Figure 10.5 Slip-ring assembly with brush lifting and short-circuiting gear

• IMP2 and IMP3	Castrol
• MP greases 2 and 3 Lanthax EP1 and 2 for large motors	Bharat Petroleum
• Servogem-2 and 3 Titex HT – for large motors	Indian Oil Corporation
• Lithon-2 Lithoplex-2 for large motors	Hindustan Petroleum
• NLGI-2 and NLGI-3	Balmer Lawrie

These grades possess a high drop point, of the order of 180°C, and a working temperature range from –30°C to +130°C.

10.4.1 Cleaning bearings

For cleaning bearings and bearing housings, before applying the grease, only the following fluids should be used: benzone, white petrol and benzole (white petrol is the most recommended).

10.4.2 Relubricating interval

The relubricating interval depends upon the running conditions of the bearing, such as the bearing type, size, speed, operating temperature and also the type of grease used. The re-greasing time is thus related to the service conditions of the grease and is represented by

$$R_G = K \cdot \left(\frac{14 \cdot 10^6}{N_r \cdot \sqrt{d}} - 4d \right) \text{hours} \qquad (10.1)$$

where

R_G = re-lubricating interval in hours of operation

K = factor as noted below

for ball bearings – 1

for cylindrical roller bearings – 5

for spherical roller bearings or taper roller bearings – 10

d = bearing bore diameter in (mm).

The relubricating period obtained from this expression is valid for operations up to 70°C, when measured at the outer ring. This interval should be halved for every 15°C rise in temperature above 70°C, which is unlikely to occur in an electric motor. For operating in areas that are hazardous or contaminated which may affect the life of the grease, the regreasing interval may be reduced, depending upon the installation's environment.

A more generalized graph from a leading bearing manufacturer is reproduced in Figure 10.6, and covers practically all sizes and types of bearings to determine the relubricating period.

When in operation, the bearings should be regreased through the grease nipples or grease injectors, if provided on the motor, after the recommended number of running hours, as prescribed in Table 10.3. If grease nipples are not provided, the motor may be temporarily stopped and regreased after removing the bearing end covers.

10.4.3 Quantity of regrease

$$G_w = 0.005D \cdot B \text{ grammes} \qquad (10.2)$$

where

G_w = quantity of regrease in grammes. This does not include the grease initially placed in the covers and other spaces

D = bearing outside diameter (mm)

B = bearing width (mm).

Table 10.3 provides a ready reference for the quantity of grease and its regreasing interval as prescribed by a leading motor manufacturer.

10.4.4 General precautions

When long idle storage is foreseen, arrangements may be made to rotate the rotor periodically by hand by 90° or so to shift the position of balls or rollers. This will prevent the grease from leaving any marks on the races and avoid any static indentation on the bearings.

After the recommended operating hours, as shown in Table 10.3, the bearings should be taken out and washed thoroughly as prescribed above and fresh grease applied. The bearing covers and the bearing housing should also be washed.

Note

1. For dust- and chemical-laden atmospheres as in cement plants, chemical industries and refineries and areas in alkaline and saline environments reduce the regreasing intervals by roughly 30%.
2. For larger frames contact the manufacturer.
3. The free space in the bearing should be completely filled while the free space in the bearing housing should be filled between 30–50%.
4. For more details refer to the product catalogues published by the leading bearing manufacturers.

10.4.5 Prevention from shaft currents

In an electric motor the stator windings are in a circular form. Each phase is wound identically and spaced equally to each other. Under ideal conditions the electric field produced by these current-carrying conductors must be balanced and neutralized, as in a three-core cable, producing no residual field. (For more details see Section 28.8). But this is not always so. While some field in space may always be present in all ratings, it assumes cognisable strength in large LT and HT machines (≥ 2 MW), using circular laminations and all machines using segmented stator punchings.* Such space fields induce an e.m.f. between the two shaft ends. This is not a direct result of proximity but may be due to asymmetry in the magnetic circuit because of harmonics present in the system, a non-ideal flux distribution, due to slight disorientation or variation in the punching for the slot positions, or an eccentric air gap between the stator and the rotor. The phenomenon of disorientation in the punchings for the slot positioning is independent of motor current and influences large LT and HT machines equally.

In HT motors even electrostatic effects between the windings of the stator and the rotor due to stator voltage

---

*Segmented stator punchings are made in two halves and are used for very large machines (> 1.5 MW).

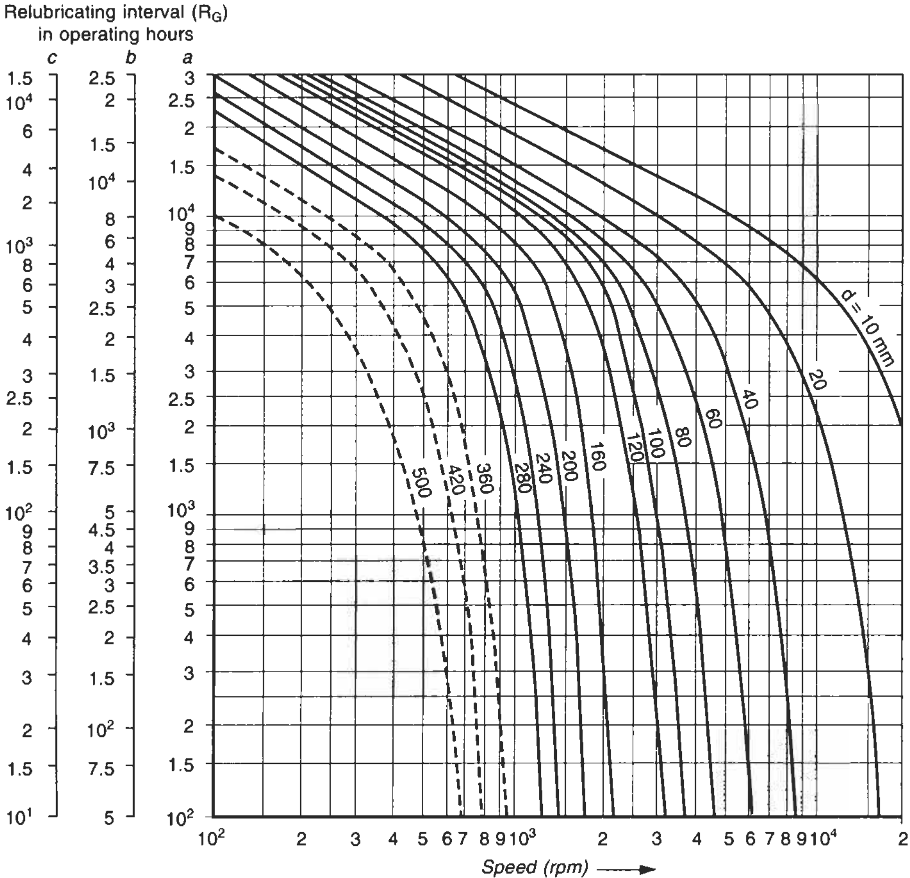

(Source: SKF)

a = Radial ball bearings
b = Cylindrical roller bearing
c = Spherical roller bearings, taper roller bearings, full complement cylindrical roller bearings, thrust ball bearings, cylindrical roller thrust bearings

Figure 10.6 Curves to determine relubricating periods for different types and sizes of bearings at different speeds

may also cause shaft currents as a result of capacitive coupling.

Both these effects cause circulating currents to flow through the motor frame, forming a complete electric circuit via the bearings (Figure 10.7). These currents are detrimental to the life of bearings due to sparking and consequent pitting and heating effects. Such currents, if not prevented, may cause indentation (pitting) on the inner races of the bearings, as well as on their balls or rollers. The pitting may not only cause noise but may also loosen the motor shaft within the bearing, causing heating and chattering, so that a stage may arise when the rotor may start to rub the stator laminates and cause damage. These shaft currents, therefore, must be prevented while installing such motors and the following are some preventive measures:

1 One of the bearings should be insulated inside its housing by providing a layer of thin insulation as indicated at location 3 in Figure 10.8 to prevent circulating current through the motor bearings.

2 Insulation of both the bearings will not prevent the circulating currents, as illustrated in Figure 10.7. Therefore a sheet of insulating material (rubber lining or Bakelite) may be provided between the motor's feet and the base frame, and insulated holding-down fasteners used for fixing the motor. This will prevent the eddy current or leakage current paths forming a closed circuit through the bearings, as indicated at location 1 in Figure 10.8. One of the bearings, generally the driving end, may also be grounded as illustrated, to prevent a build-up of electrostatic currents in the rotor.

3 Sometimes a coupling insulation as indicated at location 2 in Figure 10.8 may also prevent the eddy currents forming a closed circuit and generate the bearing currents.

The insulation, as discussed above, must be protected during normal operation to avoid any damage to it otherwise the circuit may defeat the purpose of shaft insulation. It is advisable to check the insulation periodi-

Table 10.3 Quantity of grease and regreasing intervals

Bearing bore dia. d (mm)	*To be injected after running hours*				*Quantity of grease* (g)	*Quantity of initial grease* (g)
Speed r.p.m →	750	1000	1500	3000		
45	8000	8000	8000	8000	25	40
50						50
60	4000	4000	4000	2000	40	60
65						
70						80
75						
80						100
90			2000			140
95					80	188
100						220
110	2000	2000				260
120						320
130						

Courtesy M/s Siemens

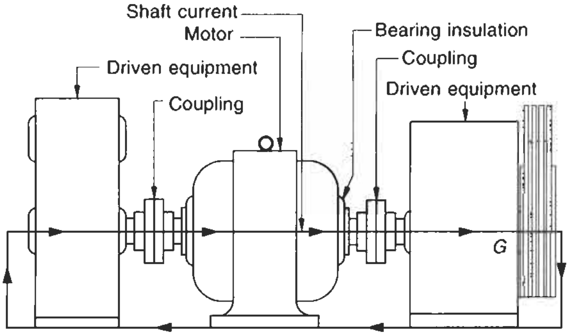

Figure 10.7 Even if both the bearings of the motor are insulated, there will be a current path as shown

cally. Creepage of oil, water, moisture, dirt or metallic particles may also short-circuit the insulation and defeat its purpose. Therefore, the insulating lining, wherever provided, must be protected and kept clean.

Summary

1 Cognisable shaft currents may exist in large LT and HT motors of 2000 kW and above, using circular laminations and all motors with segmented laminations due to the magnetic field caused by asymmetries.
2 The problem of shaft currents may also be due to dielectric leakages that may take cognisance in HT motors of 2.4 kV and above. This can be prevented by grounding one of the bearings to prevent the leakages.
3 The bearing insulation is thus determined by the manufacturer while checking the shaft voltage at the works. This forms a routine in-house test for all HT and large LT motors.
4 To detect shaft currents, the normal procedure of leading manufacturers is to measure the shaft voltage end to end, with a full voltage applied to the motor terminals. If this is 300–350 mV or more, it will indicate that the bearings require insulation, as illustrated in Figure 10.8. On very large motors, using segmented punchings, shaft voltages even of the order of 1 to 2 V have been noticed. These voltages are highly detrimental to the life of bearings and are undesirable. As standard practice, all such motors are provided with a bearing insulation by the motor manufacturers. The insulation is generally provided between the bearing and the end shield at the non-driving end (NDE) of the motor, as illustrated at location 3 in Figure 10.8.

10.4.6 Reasons for high bearing temperature

This may be due to

- Excessive quantity of grease causing churning
- Inadequate grease due to deterioration or leakage
- Misalignment, causing friction and excessive axial forces

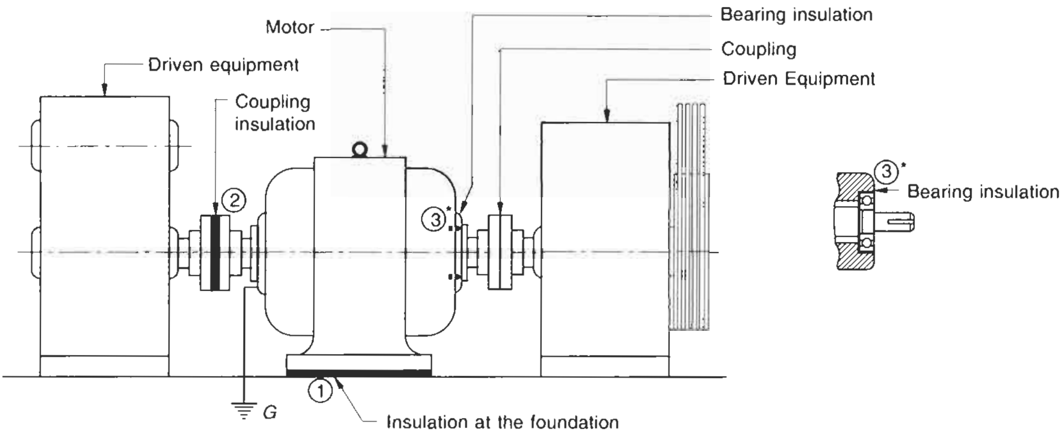

Figure 10.8 Alternative arrangements to eliminate shaft currents

- Loose fit of the bearing housing, causing both inner and outer races of the bearing to rotate inside the housing
- Corrosion or the presence of foreign matter in the bearing.

Any of the above reasons may result in noise and an increase in temperature and must be corrected. Critical installations such as a refinery, a petrochemical plant, a chemical plant or a petroleum pipeline may require special precautions and control to avert any excessive heating of the bearings, which may become fire hazards. For these installations, bearing temperature detectors with a relay and alarm facility may also be installed in the control circuit of the switching device to give warning or trip the motor if the temperature of the bearing exceeds the preset safe value.

10.5 General problems in electric motors and their remedy

Only the most general types of problems are discussed here:

1 Bearings make a churning noise or overheat: Check condition and level of grease as well as any skin effects or watermarks on the races, balls or rollers. If there are watermarks, the bearings should be replaced. Otherwise wash and regrease them, as explained earlier.
2 For creaking and harsh noises, check for misalignment and belt tension.
3 Motor not picking up speed:
   - Check all phases for supply continuity.
   - Check the voltage.
   - Check the starter connections and contacts in all three phases. Also check proper contacts and brush pressure in slip-ring motors. If these are satisfactory and the motor still does not pick up, check the suitability of the motor for the type of load and switching method.
   - Fault in the switching device. Sometimes, the switching device may not be functioning properly. To give an instance, one 150 h.p. squirrel cage motor was selected for a centrifugal air compressor. The motor starting torque was adequately chosen to start the compressor through an autotransformer starter with a 40% tapping. The motor started but locked up somewhere in the middle of the full speed and did not-accelerate further. The supply voltage and the transformer tapping were in order. A thorough check revealed that the voltage at the motor terminals was much less than 40%. A long cable drop from the A/T to the motor was suspected but when the voltage was measured at the A/T outgoing terminals, it was almost the same as at the motor terminals, thus eliminating the possibility of a longer cable drop. In fact the A/T was faulty or not properly connected so that it was producing only 25% voltage instead of 40% in the secondary circuit thus seriously affecting the torque and the motor's starting performance.
4 Motor not taking up load. This may be due to incorrect stator connections. In general, motors of 3 h.p. and above, except HT motors, are wound for delta connections and all the six terminals are located in the terminal box to facilitate Y/Δ starting. These terminals are connected in delta through metallic links (Figure 10.9). If the motor is inadvertently connected in star, each motor phase will receive only $1/\sqrt{3}$ times the rated voltage. This will reduce the torque to one third of the rated torque (Section 4.2) which may not be adequate to pick up the load. It may even damage the windings if the motor remains energized for a while due to excessive load current (I^2R losses).
5 While connecting a delta-wound motor through a Y/Δ starter, the metallic shorting links should be removed. Otherwise the starter will have a dead short-circuit at the motor terminal box and may burn the starter, damage the motor terminal box and even line cables.
6 Motor takes longer to pick up. When conditions 3

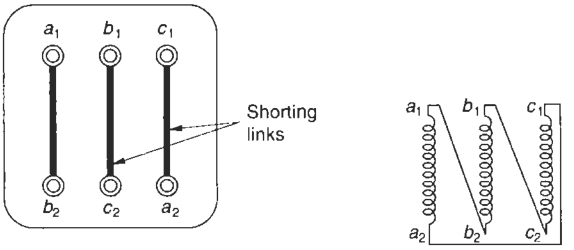

(a) Terminal box

(b) Δ connected winding

Figure 10.9 Terminals inside a terminal box

and 4 above have been checked but this problem still arises, then motor selection may not be appropriate for the type of load or the method of switching. For example, a ball mill at a thermal power station required a 75 kW motor employing a Y/Δ manual switching (an old installation). The method of switching was overlooked at the time of motor selection. The motor burnt during the start while the starter was still in the star position. The stator was found to be completely charred and the rotor damaged to the extent that its short-circuiting rings also melted due to excessive starting heat and some molten metal was scattered over the stator overhangs causing extensive damage. The reasons for such a failure can be as follows:

- The starter was manually operated and thus the changeover time, from star to delta, largely depended upon the skill of the operator, who may have been unaware of the implications of a longer starting period in the star position. Moreover, on load, the starting heat in a Y/Δ starting is much more than on a DOL starting as discussed in Section 2.7.3.

  Note A similar situation may be found in an automatic Y/Δ starter when the setting of the timer, to changeover from star to delta, is at a higher value to allow a longer starting time to pick up speed. Then also the motor would meet the same fate if the starting time exceeded the thermal withstand time of the motor.

- The fuse rating, if used before the starter, may have been inadvertently high, inconsistent with the thermal withstand capacity of the motor. Thus the fuse did not blow which would have protected the motor from such severe and persistent overloading.
- The over-current relay selection or its setting may not have been appropriate, otherwise the starter would have tripped under such a faulty condition. Selection and over-current setting of the relay should have been consistent with the motor's thermal capacity.
- A ball mill requires a high starting torque (Section 2.5 and Table 2.3) to accelerate its heavy masses. In the star position, the motor torque diminishes to one third the starting torque as on DOL. The mill would take a long time to accelerate and the ampere meter would show almost a constant starting current. The operator, possibly also judging the speed of the ball mill, may have paused in the star position before changing it over to delta but by then the motor had failed. Thus, it was a wrong application of the switching device for the type of load.

7 Motor trips and/or fuses blow during start
   - Check selection of fuses for the type of load and switching. Perhaps they are under-rated for the starting inrush current and its duration. For selection of fuse ratings see Section 12.10.4.
   - Supply voltage may be low, causing the motor to take longer to start.
   - Starter relay selection or relay setting may not be matching the starting requirements. The relay thermal characteristics must match motor characteristics. In heavy drives with prolonged start times the relay may not operate if it is not properly selected. For heavy loads, with large moments of inertia and requiring a longer starting time, a timer can be introduced into the relay circuit, to bypass this until the motor accelerates to a reasonable speed. Then the relay circuit is reactivated. The most common practice is to provide a CT-operated thermal overload relay (Figure 13.53; see also Section 12.4.1). The CTs have a low saturation point. In the event of a high starting current, they become saturated at two to three times the full load current and bypass the excessive starting kick through the relay and thus avoid a false trip during a prolonged start.

8 Motor vibrates. A motor already tested at the manufacturer's works for vibration limits, as shown in Table 11.3, may still appear to have more vibrations at site during operation. This may be due to the following reasons:
   - The foundation bed or the structure on which the motor is mounted is not rigid, is tilted or is uneven. Tighten foundation bolts and check for proper alignment of the motor and the drive. Make the foundation or structure as rigid as possible.
   - Single phasing, in which case the motor may make a humming noise and cause vibrations due to uneven flux distribution.
   - Bearing-end play may also cause such vibrations.
   - It is possible that the driven equipment to which the motor is coupled has a higher vibration level than the motor, resulting in quantum imbalance and more vibrations than when the motor was tested. All attempts must be made, to bring the vibration level of the drive and the driven system within the limits as prescribed in Table 11.3.

9 The motor makes rumbling noise and the stator current fluctuates. The rotor circuit may be broken and should be repaired. If the motor also overheats, there may be an inter-turn fault or a short-circuit between the phases. Detect these and rectify if possible, otherwise rewind the motor.

10 If heavy rain causes a flash flood at the site of installation, the motor may be submerged in water for some time. A reasonably good motor, with good

insulation impregnation and baking, can be washed and dried, to work again. Dismantle the motor, take out the rotor and bearings. Wash the stator and rotor with clean water to remove all the mud and silt. Pad it dry with cloth. Blow warm air over the stator and the rotor and heat them gradually, adopting the procedure in Section 9.5. Unless they show permanent watermarks or rust or scratches, the bearings can also be washed dry and regreased as shown in Section 10.4.

11 Cast iron body, feet or ribs etc. found broken or cracked during transit or otherwise. Replacement of the motor in such cases may not be practical. However, using the motor may not be advisable in view of a weaker foundation and insufficient cooling. In such cases the broken parts can be welded using cast iron electrodes. Cracks, however, cannot be remedied. Unless the cracks are wide and may cause extensive damage during operation, the body may still not require replacement. Minor cracks, however, which do not impair the motor's perfor-mance or cause development of further cracks, may be compromised.

10.6 Winding temperature measurement at site

Sometimes the motor may appear to be running overheated. In fact it may not be so. The easiest way to measure the temperature at site is by a thermometer which can be conveniently inserted into the hole of the lifting hook. In very small motors where a lifting hook may not have been provided, a small oil cavity can be drilled in between the top fins allowing the thermometer to be embedded there (Figure 10.10).

10.6.1 Temperature correction

When the temperature is measured by a thermometer as noted above it obviously does not measure the temperature of the hottest spot inside the stator. The readings may, at best, reflect the temperature of the stator housing instead of the stator winding. As a rough estimate, we can take a temperature gradient of 30% between the surface and the windings to obtain a near-realistic temperature of the winding. If θ is the thermometer reading, then the winding temperature may be around $(\theta/0.7)$ °C and it should be less than the safe working limits. For example, for class E insulation $\theta/0.7 \leq 105°C$ or $\theta \leq 74°C$, and for class B insulation $\theta/0.7 \leq 110$ °C, i.e. $\theta \leq 77°C$.

This illustration is for general guidance when the motor is checked at site for its operating temperature. The thermometer reading should not exceed the above figures. However, a few degrees above these figures may be permissible, and this will depend upon the wall thickness of the stator housing, the air duct between the housing and the stator core, the design of the cooling ribs and the effectiveness of the cooling fan etc., which only the manufacturer can confirm.

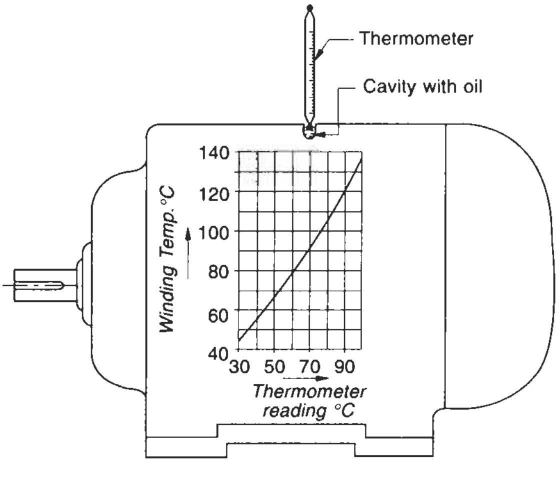

Figure 10.10 Measurement of winding temperature at site by thermometer method

Corollary

A surface temperature as high as 70°C or more is obviously a very high temperature and such a surface cannot be easily touched. It is therefore natural for a human hand to feel very hot when touching the surface of a running motor. But to derive a conclusion from this may be misleading.

10.7 Analysis of insulation failures of an HT motor at a thermal power station

A powerhouse (thermal) application is the most stringent application, as discussed in Section 7.19. Based on field data collected from various installations by different agencies the general insulation failures observed may be attributed to the following.

Electrical failures

1 *Failure at overhangs*
  - In protected motors failure may be due to accumulation of fly ash at the overhangs (modern installations use only enclosed motors). Fly ash becomes an extremely good conductor when damp. The failure will generally occur when a motor is switched on after a prolonged shutdown.
  - The motor may also fail due to system overvoltages, such as during a fast bus transfer (Section 7.19) or due to voltage surges (Section 17.3).

2 *Failure of a coil*
Coil puncture is also a cause of insulation failure. It may be a result of poor impregnation at the manufacturing stage, or due to overvoltages, voltage surges and ageing. In resin-poor insulations, where the whole stator and rotor, after impregnation, becomes a solid mass, the chances of an insulation failure are remote. In a formed coil (resin-rich) design, however, there may be a differential expansion (thermal effect)

between the insulation, the copper conductor and the iron core during normal running. This may cause loosening of bondage between them, leading to vibrations and shrinkage of the insulation on cooling. This can result in cracking of the insulation, exposing it to the environmental pollution discussed later, and eventual failure.

Prevention of insulation failures

- With the use of surge arresters and surge capacitors (Section 17.10)
- By monitoring the insulation condition of the windings during maintenance, at least once a year, which can be carried out by measuring (a) the polarization index (Section 9.5.3) and (b) the dielectric loss factor, tan δ (Section 9.6) and making up the insulation as in Section 9.5.2, when the condition of the insulation is acceptable and only its level is less than permissible.

A d.c. insulation resistance test or polarization index reveals only the surface condition of the insulation and does not allow a realistic assessment of internal condition. Loss tangent values are true reflections of the insulation condition to detect moisture content, voids, cracks or general deterioration. The tan δ versus test voltage curve may be drawn and compared with the original curve provided by the manufacturer, and inferences drawn regarding the condition of the insulation. The different starting tan δ values will reveal the condition of the insulation in terms of amount of contamination, as noted in Table 10.4 (See IEE, Vol. 127, May 1980).

Table 10.4 Conditions of insulation in terms of starting (tan δ)

Starting value of tan δ%	*Amount of contamination*
0–4	Low void content
4–6	Clean
6–10	Some dirt
10–14	Dirt and moisture
14–16	Gross contamination
16–20	Heavy deposit of oily dirt
Above 20	Severe oil and carbon contamination

3 *Flash-over in terminal box*
This may be due to fly ash, overvoltages or voltage surges. For prevention see Section 7.18.

Mechanical failures

1 *Rotor rubbing the stator*
- Sometimes, as a result of an unbalanced magnetic field, causing an air gap eccentricity or excessive shaft deflection, the motor is not able to maintain the small air gap between the rotor and the stator and this may lead to failure.
- It is also possible that after long running hours the balls or the rollers of the bearing have given way.
- As a consequence of misalignment in the coupling.

Prevention
- Ensure that the supply voltage is balanced.
- Check bearings and air gap during maintenance, at least once a year.
- Ensure an accurate alignment of load.

2 *Rotor stampings are loose or rotor bars are damaged*
- Misalignment causes vibrations, which may eventually lead to failure. The vibrations may also cause cracks between the rotor bars and the end rings.
- Frequent starts and stops may also cause this because of excessive heat.

Prevention
- Check for accurate alignment.
- Check the rotor's condition during the annual maintenance.

3 *Environmental pollution*
Failure may be caused by coal dust, fly ash and moisture. Pollution may weaken the insulation, particularly of a protected type motor and result in a failure at some stage.

Prevention
Blow the surface clean with air at brief intervals.

4 *Ageing*
Overvoltages, voltage surges and overheating of windings over many years of operation may dry and shrink the insulation and develop cracks. Through these cracks, moisture and dust can penetrate and destroy the insulating properties of the insulation resulting in an eventual failure of the insulation.

Field experience has revealed that one of the major causes of failure of an HT motor is weak insulation, caused by environmental pollution and ageing.

Relevant Standards

IEC	*Title*	*IS*	*BS*	*ISO*
60072-1/1991	Dimensions and output series for rotating electrical machines. Frame numbers 56 to 400 and Flange number 55 to 1080	1231/1991	BS 5000-10/1989 BS 4999-141/1987	–
60072-2/1990	Dimensions and output series for rotating electrical machines. Frame number 355 to 1000 and Flange number 1180 to 2360	1231/1991	BS 5000-10/1989 BS 4999-103/1987	–
60072-3/1994	Dimensions and output series for rotating electrical machines. Small built in motors. Flange number BF 10 to BF 50	996/1991	BS 5000-11/1989	
60136/1986	Dimensions of brushes and brush holders for electrical machinery	9919/1991, 13466/1992	BS 4999-147/1988	–

–	ISO system of limits and fits. Bases of tolerances, deviations and fits	919 (Part-I/II) 1993	BS EN 20286-1/1993	286-1/1988
–	Code of practice for installation and maintenance of rolling bearings	3090/1996	–	–
–	Specification for lithium based grease for industrial purposes	7623/1993	–	–
–	Code of practice for installation and maintenance of induction motors	900/1992	–	–
	Dimensions of slide rails	2968/1991 (DIN 42923)		

Relevant US Standards ANSI/NEMA and IEEE

ANSI/IEEE 56/1992	Guide for insulation maintenance of large a.c. rotating machines (10 kVA and larger)
NEMA/MG 2/1993	Motors and generators ratings, construction, testing and performance
NEMA/MG 2/1989	Safety Standards (enclosures) for construction and guide for selection, installation and use of rotating machines
NEMA/MG 10/1994	Energy management guide for selection and use of three phase motors
NEMA/MG 11/1992	Energy management guide for selection and use of single phase motors
ANSI/IEEE: 432/1998	Guide for insulation maintenance for rotating machines (5 h.p. to < 10,000 h.p).

Notes

1 In the tables of relevant Standards in this book while the latest editions of the standards are provided, it is possible that revised editions have become available. With the advances of technology and/or its application, the updating of standards is a continuous process by different standards organizations. It is therefore advisable that for more authentic references, readers should consult the relevant organizations for the latest version of a standard.

2 Some of the BS or IS standards mentioned against IEC may not be identical.

3 The year noted against each standard may also refer to the year of its last amendment and not necessarily the year of publication.

List of formulae used

Relubricating interval

$$R_G = K \cdot \left(\frac{14 \cdot 10^6}{N_r \cdot \sqrt{d}} - 4d \right) \qquad (10.1)$$

R_G = relubricating interval in hours of operation
K = a factor depending on type of bearing
d = bearing bore diameter (mm)

Quantity of regrease

$$G_w = 0.005D \times B \text{ grammes (g)} \qquad (10.2)$$

G_w = quantity of regrease (g)
D = bearing outside diameter (mm)
B = bearing width (mm)

Further reading

1 Lundberg, G. and Palmgren, A., 'Dynamic capacity of roller bearings, *Acta Polytechnica, Mechanical Engineering Series 1,* Proceedings of the Royal Swedish Academy of Engineering Sciences, No. 3, 7 (1947).
2 Lundberg, G. and Palmgren, A., 'Dynamic capacity of roller bearing,' *Acta Polytechnica M.E.,* Series 2, RSAES, No. 4, 9 (1952).
3 Lundberg, G. and Palmgren, A., *Load Ratings and Fatigue Life for Roller Bearings,* Std. 11-1978.
4 Seameatson, R.W. (ed.), *Motor Application and Maintenance Hand Book.*

11

Philosophy of Quality Systems and Testing of Electrical Machines

Contents

Section 1

SECTION 1

11.1 Philosophy of quality systems (a reference to ISO 9000)

The quality of a product is the main consideration when making a purchase. It may be a consumer durable, an industrial product or a professional service. The quality of a product also means a reasonable cost-efficient after-sales service and a consumer-friendly attitude on the part of the producer. Farsighted societies and organizations, that conceived such a philosophy long ago evolved methods to practice this meticulously and con-sistently. This has helped them to upgrade their own methods and technologies to excel in their fields, and today they are ahead of their competitors. They recognized the disadvantages of poor quality as long ago as in 1911, as mentioned in F.W. Taylor's book *Principles of Scientific Management*. Taylor laid great emphasis on inspection methods and quality control and his philosophy gained wide acceptance at the time.

It must be emphasized that a method leading to final inspection or testing of a product only when it has been manufactured is a shortsighted approach and cannot guarantee total quality requirements. This method fails to guard against improper use of inputs, inadequate product design or lack of process control etc., that may appear only after the product is put to use. An inadequate size or quality of a bolt, incorrect tightening, or any other inconsistency in quality, for instance, may not be detected during brief inspections, but may appear during use. Moreover, inspection alone cannot identify problems that may occur as a result of defective packing (the packer might damage the product while nailing the packing), poor storage (inconsistent storage facility, water seepage, rodents or any substances that may damage, rust or corrode the product), and damage during transportation.

Products for critical duties such as for defence, aviation, space or transport will need much more than a mere final inspection. Such applications can ill afford to be left to chance and this is true even with products for household and daily use. To ensure proper quality of product at every stage, therefore, it is imperative to introduce quality systems from planning to various manufacturing activities, to guarantee the required quality of product. A good quality system would identify areas such as packaging, storage and transportation methods and set norms to guarantee safe delivery of the product to its destination.

Quality is thus a part of an organization's policy and objectives, and is applicable to those who wish to achieve product excellence, through self-discipline and quality assurance activities. It aims at

- Better product reliability
- More customer confidence by relieving them from constant checks to ensure the required quality and timely delivery, particularly for custom-built and engineering products. In a third party order, the quality systems would also help to fulfil the customer's own contractual obligations to a client.
- Improving a company's image and goodwill.
- Enhancing competitiveness and acceptability in national and international markets, where many other brands may already be available.
- Reducing wastage and rework.
- Improving productivity, etc.

For a nation to produce a good quality product and meet the stringent quality expectations of the market, it is mandatory to meet such requirements. Quality has assumed greater significance in the changed world scenario, with the emergence of the WTO (World Trade Organization) formerly GATT (General Agreement on Tariffs and Trade), which means greater competition at the international level. Through quality, one can build international markets for products, in addition to local markets, not only to improve an image but also to serve the economy of the nation by earning foreign exchange. The Quality Systems may be applied to all activities, as noted later, that together produce a product or service.

Making of the Quality Systems

To put these philosophies into practice, many countries have framed guidelines and standards. The earliest standard was issued in 1959 by the US Department of Defense for large contracts (MIL-Q 9858, 'Quality program requirements').

The long interval between Taylor's description of Quality Management in 1911 until 1959, when the US Defense Department laid down its quality requirements for the first time, was perhaps due to an increase in global interest that developed only in the late 1950s. Since then, there has been a continuous application of these standards to contractors and manufacturers worldwide.

For civilian use in the United States, ANSI/ASQC. Standard C and Z1.15 were published in 1968. Since then, many countries and large organizations have been publishing their own quality control systems. For civilian reference, 'A Guide to Quality Assurance' was first published in 1972 (BS 4891). This was soon replaced by BS 5179, 'Guide to Operation and Evaluation of Quality Assurance Systems'. This was upgraded by BS 5750 in six parts. To ensure consistency in all standards and to make them universal a technical committee, TC/176, of the International Standards Organization (ISO), Switzerland, was entrusted with the task of drawing up such a set of standards. They have by now introduced the following standards:

ISO 8402 – Quality Vocabulary.
ISO 9000 – Quality Management and Quality Assurance Standard. Guidelines for selection of Standards in the series and use of the same for the management of quality systems.
ISO 9001 – Model for Quality Assurance in Design or Development, Production, Installation and Servicing.
Applicable to those who design, produce, install and service their products or carry out such activities.

ISO 9002 – Model for Quality Assurance in production, installation and servicing.
Applicable to those who make their products on the basis of some proven designs, or work as ancillaries for standard products.

ISO 9003 – Model for Quality Assurance in Final Inspection and Test.
Applicable to those who are engaged in third-party inspection and testing.

ISO 9004 – Quality Management and Quality System Elements – Guidelines.
Applicable to quality assurance for services, such as hotels and hospitals etc.

All these standards have since been adopted by the member countries as their national standards, fully or in slightly modified forms, to suit their own requirements and working conditions. These standards define and clarify the quality norms and aim at in-house quality disciplines, to automatically and continually produce a product, provide a service or programme to the stipulated specifications, quality norms and customer needs. They guarantee a product or service with a minimum quality. The envisaged quality systems thus aim at a work culture that pervades all those involved in different key activities or processes, to achieve the desired goal through carefully evolved systems.

Quality systems

These deal broadly with the quality concepts as applied to a product or services, such as design, programming or a process etc., practised by an organization, through better communication and understanding. They can be achieved through

- Quality assurance schemes, and
- Quality check systems

The above are implemented through Quality Management (QM).

Quality Management stresses participation by all involved in the work system, and their commitment to follow the systems meticulously and consistently.

There is a need for interaction and assessment of different activities or processes to overcome any shortcomings by improving or readjusting the system of working, operation or controls, to achieve a better work culture and an understanding and respect for all in the system. When followed, this will result in the following:

- Better work processes
- Better production control
- Timely remedial action to achieve the set goals of quality and productivity.
- Reviewing and implementing the changing needs of the product in the face of tougher competition or changed market conditions.

To draft quality systems and to adhere to such disciplines

This is a work culture, to be inculcated into the whole workforce and which must percolate from top management to the shopfloor. The systems must be effective, well communicated, understood thoroughly and adhered to strictly. The mode of system will largely depend upon the type of industry or services. Generally, the systems are based on a commonsense technique, to achieve the desired objectives, by dividing the total process related to designing, production, programming and other functions into many different key activities, identifying the likely areas or processes where the work process may deviate from the set parameters or where it can be further improved. All such key activities must be properly defined, documented, authorized and effectively enforced.

The human element, seen in errors, ignorance, lack of training, lethargy, illiteracy or indiscipline, or indifference, must be monitored carefully. This may require either an adequately qualified and experienced person or proper job training. Indifference, for reasons other than the above, would be a matter for human resource development, where a worker's skills and habits may have to be adapted to fit into the system.

Ingredients of quality systems for a manufacturing unit

- Define the organizational structure
- Define the responsibilities
- Vendor selection and development, for the inputs that go into the production of the items
- Checks and controls over the inputs
- Product design
- Process, planning and development
- Stage inspection, checks and controls, tests and a feedback system for corrective measures. The system must help to identify the potential quality areas
- Records
- Documentation
- Packaging
- Storage
- Transportation
- Receipt at site and
- Installation and operation.

This is only a broad outline for formulating a system. Procedures not applicable may be deleted and those not covered and are considered necessary may be included in the above list.

Infrastructure facilities

To implement the above, the basic facilities that must be available are:

- Human resources and specialized skills
- Facility for training
- Design facilities and engineering back-up
- Manufacturing facilities
- Testing and quality check equipment
- Any other facility considered necessary to implement the quality systems in full.

Emphasis

Modern management systems stress the need for continuous monitoring of defined systems and procedures for enforcement and improvement of quality systems. These should minimize immediately and eliminate ultimately the recurrence of similar problems through preventive measures.

Auditing (a monitoring tool)

As emphasized above, full monitoring of the proper implementation of quality activities is essential. To achieve this, a periodic audit and review of the working of the system is an essential element in any Quality Management System. Shortcomings, if detected, must be corrected as soon as possible and prevented in the future. Documented reviews help in maintaining and improving management systems and techniques.

Economics

This is an extremely important aspect of the whole exercise. The basic purpose of all checks and controls is to reduce reworking, reprocessing, failures or rejections during the work process with a view to produce a product of the required quality and hence minimize cost for better financial returns. A high-cost input not commensurate with the type of the product may defeat the basic purpose of adopting such a system.

Product performance and feedback

This is essential to improve the product by upgrading the quality or modifying its design or other parameters that may make it more acceptable and competitive in the market. This is possible by creating a user-friendly approach to obtain reactions to the product's performance.

Customer quality checks

For the customer to ascertain the capability of a producer to deliver goods or services to the required standards it is essential for the producer to have all documents that establish his or her competence to deliver the goods or services, according to the prescribed Quality Standards. These documents may cover

- Adequacy of the Quality Systems supported through Quality Assurance Plans (QAPs), in design, process, installation and servicing.
- Capability to achieve the required quality, supported by quality manuals
- Control over procurement of raw material and components that compose inputs
- In-house checks of various activities
- In-house final inspection and testing.

All the above documents may then be compiled and sent to prospective customers for comments. Any suggestions may be incorporated into the original documents to further improve in-house working. These documents will define the quality objectives of the producing company.

Guidelines to deviations

Sometimes a compromise in the quality of the inputs (perhaps due to non-availability of a particular component to the required specification) may be necessory to avoid a production delay. Similar constraints in the design or process may also make it necessary to have a deviation in design, without undermining the quality requirements. The ISO emphasizes that, for such deviations, written authorization from a competent authority, and preferably also the written consent of the customer, is essential before implementing such a change. This will be for a specific period and for a specific number of items.

Accreditation by ISO

So far the ISO has provided the necessary guidelines for quality systems, as noted above, and which a producer can adopt in a way that may suit best a product and process line. The rest is left to the government of a country to appoint their own accrediting bodies for certification of producers. These agencies are then authorized to monitor, perform surveillance audits and issue certificates to organizations, who wish to obtain these certificates and conform to the predefined requirements of these standards. However, if a product is for global sales, another certification by a government body of that country may also be necessary, resulting in a multiplicity of certifications which, besides being cumbersome, may also become time consuming. It is therefore relevant that the accrediting be necessarily, carried out at one point only by a central agency on behalf of ISO, and recognized by all member countries. Several of these bodies are now operating in various countries to recommend and accredit producers.

Towards Total Quality Management (TQM)

The above are broad guidelines along which producers can formulate a quality system to suit their needs. There are no hard and fast rules for disciplines and systems – these arise from experience and continuous practice. They must, however, be made more effective so that they inculcate respect and confidence in all, to adopt and follow them. No system, however good, can be imposed on anyone, unless they are willing to understand, accept and respect it. This may require an appropriate training programme which may also be made a part of the work system. The overall aim of the above exercise is to achieve 'Total Customer Satisfaction' through 'Total Quality Management' (TQM). Total Quality Management is a comprehensive term for integrated activities that are put into practice, with care and development of human resources, to provide complete satisfaction for a customer. It is a goal to be pursued with commitment and perseve-rance.

In this era of globalization, anyone who wishes to remain in the race and to excel must make TQM an ultimate objective and remember that 'the pursuit of excellence is a never-ending journey'.

SECTION 2

11.2 Testing of electrical machines

This section covers only the tests that are essential on a completed motor, irrespective of the manufacturing procedure and stage quality checks. If ISO 9000 guidelines are assimilated, practised and enforced by a manufacturer so that a customer's trust is obtained, a final pre-despatch inspection by the customer may not be necessary. The customer, having gained confidence in the practices and Quality Assurance Systems of the manufacturer, may issue an authorization to the manufacturer to despatch the material under their 'own inspection certificate', rather than an inspection by the customer. We discuss below the test requirements procedure and the acceptance norms prescribed by various national and international standards for such machines and adopted by various manufacturers.

To fulfil the above requirements the material inputs for the motor, such as stampings, steel, enamelled copper wire, insulations and varnishes, bearings, enclosure materials and hardware must be subjected to a series of acceptance tests according to norms and standard specifications. For example, enamelled copper wire used for windings must undergo tests at the initial inspection stage before use. Stage inspection is carried out during processing of the various motor components. Figure 11.1 identifies vital parts of a motor and the corresponding specification standards, on which these components can be checked and tested. Instruments and gauges used for inspection must be periodically calibrated and checked for dimensional accuracy.

Purpose of testing

The purpose of testing an electrical motor is to ensure its compliance with the norms of design, material inputs and manufacturing accuracy. It determines the mechanical soundness and electrical fitness of the machine for its electrical and mechanical performance. Such tests determine the following:

1 Mechanical aspects: vibration and noise level.
2 Electrical aspects: guaranteed output and performance.
3 Temperature rise at the guaranteed output to ascertain the adequacy of the insulating material and life of the motor. If the temperature rise is more than permissible for the type of insulation used, it will deteriorate the insulating properties and cause thermal ageing. As a

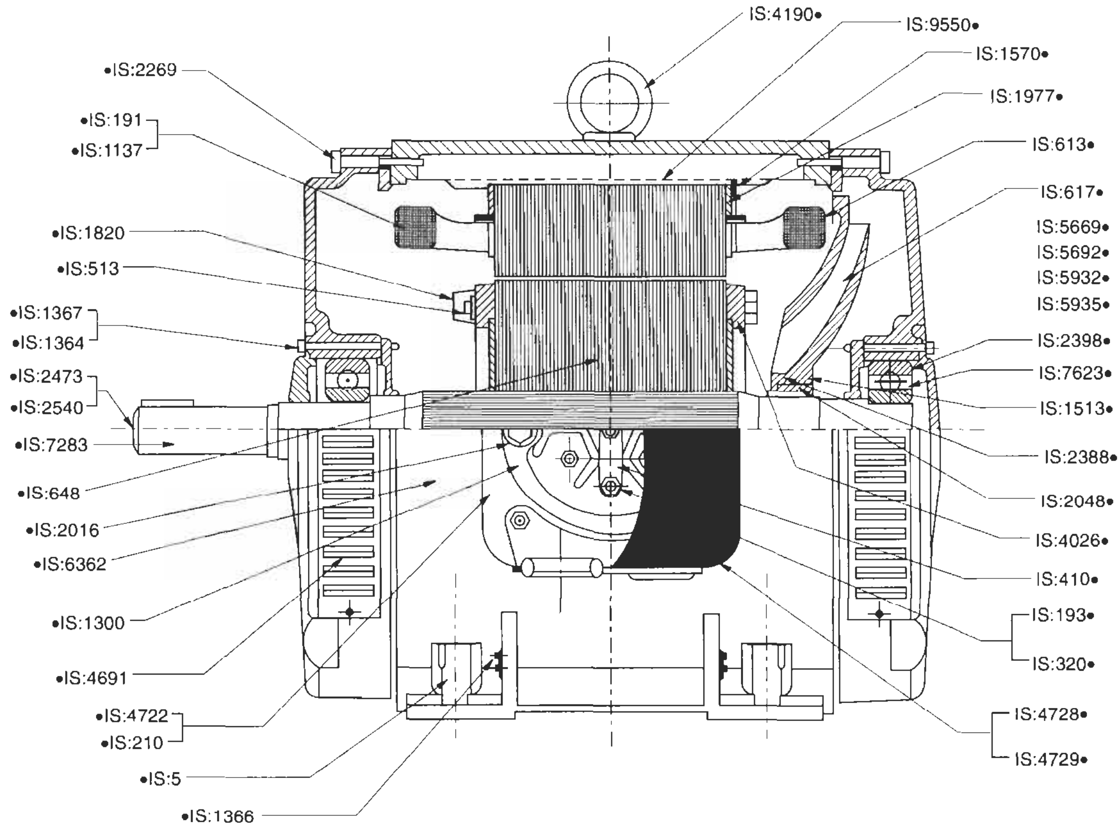

Figure 11.1 IS specifications for various parts as used in an electric motor

rule of thumb, a temperature rise of 10% more than the rated may reduce the life of the insulation by 40–50%. See Section 9.2 for more details.

4. Torque characteristics, i.e. starting torque, pull-out torque and pull-in torque, in the entire speed range to ensure that the motor will develop adequate torque at all speeds to meet the load requirement. See Section 2.5 for more details.

On an assembled motor the following visual checks are performed before it is run:

1 That all the covers and canopies are fitted in their correct locations.
2 Special-purpose motors such as increased safety motors, flame-proof or explosion-proof motors must be checked for gaps, clearances and creepage distances of all the mating parts forming flame paths. The construction of these motors must follow IEC 60079 as noted in the list of standards.
3 The terminal box for its correct position
4 The terminal box for proper connections, number of terminals and their markings
5 The correct direction of rotation of the cooling fans
6 The heaters and thermistors when provided
7 The clearance and creepage distances between the terminals and between each terminal and the ground.

On a wound rotor motor, the following additional checks are also necessary after removing the slip-ring covers, prior to testing:

1 The numbers, size and grade of the brushes and whether the brushes are bedded properly to the contours of the slip-rings
2 Whether the brushes are free to move in the brush holder and are not slack
3 The brush spring tension. Brush pressure, when measured, using finger spring balance, should be between 150 and 200 N/cm^2.
4 Whether the brushes are set concentrically on the slip-rings, and each individual brush holder is set approximately 2–2.5 mm from the slip-ring surface. Slip-rings must be concentric and free from damage and blow holes.

After the above checks the motor can be subjected to type and routine tests. For testing instruments, the following class and grades are recommended.

11.2.1 Electrical measurements

Selection of testing instruments

The indicating instruments used for electrical measurements must conform to IEC 60051 and have the following accuracies:

- For routine tests: class 1.0 or better, and
- For type tests: not inferior to class 0.5.

The current transformers and voltage transformers, when used, must conform to IEC 60044 and IEC 60186, as noted in the list of standards. Instrument transformers with the following accuracies must be used:

- For routine tests: Class 1 accuracy
- For type tests: Class 0.5 accuracy

Quality of test power supply

- *Voltage*
  The voltage must approach a sinusoidal waveform and should be balanced. If at the time of conducting the tests the voltage is almost but not completely balanced, arithmetical average of the phase voltage must be used for calculating the machine's performance.

Note
1 The voltage is considered to be virtually sinusoidal if none of the instantaneous values of the wave differ from the instantaneous value of the same phase of the fundamental wave by more than 5% of the amplitude of the latter (IEC 60034-1).
2 A system of three-phase voltage is considered to be virtually balanced if none of the negative sequence components exceeds 1% over long periods or 1.5% for short periods of a few minutes and zero sequence components exceed 1% of the positive sequence components (IEC 60034-1). See also Section 12.2.

- *Current*
  The line current in each phase of the motor should be measured. If the line current is not exactly equal in all phases, the arithmetical average of the phase current must be used for calculating the machine's performance.

- *Power*
  Power input to a three-phase machine may be measured by two single-phase wattmeters, connected as in the two-wattmeter method. (Section 11.4.3). Alternatively a single polyphase wattmeter may be used.

- *Frequency*
  The frequency should be maintained as close to the rated frequency as possible. Any departure from the rated frequency will affect the losses and the efficiency as shown in Section 1.6.2.

11.2.2 Type tests

Type tests are conducted on the first machine of each type or design to determine the characteristics and demonstrate its compliance with the relevant Standards. These tests provide a standard reference for any subsequent similar machine. The following are the type tests according to IEC 60034-1:

1 Resistance measurement of all windings and auxiliary devices (heaters and thermistors, etc.), when the machine is cold (at room temperature)
2 (i) Temperature rise test at full load
  (ii) Resistance measurement of all the windings and

temperature measurement by thermometer when the machine is hot.

3 Load test
4 Overspeed test
5 Speed–torque and speed–current curves
6 Vibration measurements and noise level tests to determine the machine's mechanical performance
7 Verification of dielectric properties
  (i) On the completed machine with wound coils or formed coils: power frequency voltage withstand or HV test
  (ii) Process tests during the manufacture of formed coils
  (a) Test for insulation resistance – discussed in Section 9.5.3
  (b) Test for dielectric loss factor or dissipation factor tan δ for rated voltages 5 kV and above
  (c) Test for impulse voltage withstand for rated voltages 2.4 kV and above.

Note

1 The impulse voltage test is meant specifically for formed coils only. It serves no purpose for a wound machine, which is already impregnated and cured as a whole mass.
2 The tests for insulation resistance and dielectric loss factor should, however, be carried out on a completed machine also with formed coils to establish reference data for field tests, as noted in Section 9.6. However, these tests on a completed machine with formed coils do not monitor the process quality of insulation.

8 No-load test
9 Locked rotor test
10 Measurement of starting torque, pull-out torque and pull-in torque
11 Open-circuit voltage ratio test for slip-ring motors
12 Verification of degree of protection.

11.2.3 Routine tests

Routine tests are conducted on subsequent similar machines. The purpose of a routine test is to ascertain that the machine is assembled correctly and will be able to withstand the appropriate high-voltage test, and will be in sound working condition, both electrically and mechanically. As a minimum requirement these tests will consist of:

1 Resistance measurement
2 No-load test
3 Verification of dielectric properties
4 Insulation resistance test
5 Measurement of open-circuit rotor volts for slip-ring motors.

11.2.4 Seismic disturbances

We provide a brief account of such disturbances in Section 14.6. This also deals with the recommended tests and their procedures to verify the suitability of critical structures, equipment and devices for locations that are prone to such disturbances.

11.3 Procedure for testing

In the following we describe a brief procedure to conduct various tests and measurements and computation of the test results according to IEC 60034-1. (For more details of the testing procedure the reader should refer to the standard.)

11.3.1 Resistance measurement

At the beginning of the test the motor must be at ambient temperature. In this condition the temperature and resistance of the windings should be recorded accurately. These values will be used later, with other test results, to evaluate the temperature rise and efficiency.

Many types of winding connections are used, depending upon the type of machine and the application for which it is designed. The basic star and delta connections are most common, but a combination of these two with parallel circuits is also used, on multi-speed and dual-voltage motors, as discussed in Section 6.1. The connection diagram of the motor, showing the connections of the windings and the terminal arrangement, should also be checked for correctness of the connections. Resistance across the line terminals of the windings should be measured, except for a star-connected motor, where phase resistance is measured.

Typical connections are shown in Fig. 11.2, where

$R_1 = \frac{e}{2i}\,\Omega$, in star-connected windings, and

$R_1 = \frac{3}{2} \times \frac{e}{i}\,\Omega$ in delta-connected windings.

The following two methods are commonly used for measurement of winding resistance.

The drop of potential method or voltmeter-ammeter method

In this method simultaneous readings of voltage at motor terminals and current are taken while using a d.c. source of supply and the resistance of the windings is calculated. Current must be restricted to 10% of the rated current of the windings. Errors introduced into the measurement, by the resistance of leads and contacts must be compensated.

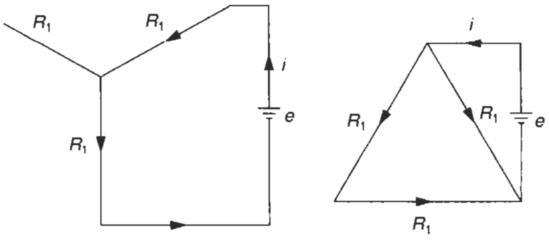

(a) Y-Connected (b) Δ-Connected

Figure 11.2 Measurement of winding resistance

The bridge method

Here, the unknown resistance is compared with a known resistance using a suitable bridge. Resistance above 1 Ω can be measured by Wheatstone bridge. Resistance less than 1 Ω can be measured by a Kelvin double bridge, where the lead resistance must also be compensated.

All precautions must be taken to obtain the temperatures of the windings when measuring cold resistance. These temperatures, when measuring the cold resistance, may be obtained by a thermometer placed in contact with the windings or by resistance temperature detectors, if they are provided in the windings. The temperature of the surrounding air will not be regarded as the temperature of the windings, unless the motor has been idle for a long period under similar atmospheric temperature condition. If the resistance of a copper conductor is known at one temperature, it may be calculated for any other temperature by using the following formula:

$$R_1' = \frac{(235 + t_2)}{(235 + t_1)} \cdot R_1$$

where

R_1 = resistance measured at t_1°C, and

R_1' = resistance at t_2°C

If R_1, R_1' and t_1 are known, t_2 can be calculated.

In slip-ring motors the rotor winding resistance will be measured at the point of connection of the rotor winding to the slip-rings, so that the slip-ring resistance is eliminated from the measurement of the true rotor winding resistance.

11.3.2 Temperature rise

This test is intended to determine the temperature rise in different parts of the motor windings while running at rated conditions and the permissible temperature rise limits are specified in Table 11.1. While preparing for the temperature rise test the motor should be shielded from currents of air coming from adjacent pulleys, belts and other components to avoid inaccurate results. Sufficient floor space should be left between the machines to allow for free circulation of air. In normal conditions, a distance of 2 m is sufficient. The duration of the temperature rise test is dependent on the type and rating of the motor. For motors with continuous rating, the test should be continued until thermal equilibrium has reached. Whenever possible, the temperature should be measured both while running and after the shutdown.

1 While conducting the test the negative sequence voltage should be less than 0.5% of the positive sequence component. In terms of current, the negative sequence current should not exceed 2.5% of the positive sequence component of the system current. Measurement of any one of the components will be adequate.

2 For continuously rated machines, readings should be taken at intervals of one hour or less. For non-continuously rated machines, readings should be taken at intervals consistent with the time rating of the machine. The temperature rise test should continue until there is a variation of 1°C or less between the two consecutive measurements of temperature.

   For motors with a short-time rating, the duration of the test should correspond to the specified short-time rating. At the end of the test the specified temperature rise limits should not exceed. At the beginning of the test, the temperature of the motor should be within 5°C of that of the cooling air.

   In motors for periodic duty, the test should be continued until thermal equilibrium has been reached. Unless otherwise agreed, the duration of one cycle should be 10 minutes for the purpose of this test. Temperature measurements should be made at the end of a cycle to establish thermal equilibrium.

Measurement of temperature

When thermal equilibrium is reached, the motor must be stopped as quickly as possible. Measurements must be taken both while the motor was running and after shutdown (wherever possible). No corrections for observed temperatures are necessary if the stopping period does not exceed the values given in Table 11.2.

Where successive measurements show increasing

Table 11.1 Permissible temperature rise for naturally (indirectly) cooled motors

Method of measurement		*Insulation class*									
		A		*E*		*B*		*F*		*H*	
		a	*b*	*a*	*b*	*a*	*b*	*a*	*b*	*a*	*b*
Resistance	°C	60	60	75	–	80	80	105	100	125	125
ETD	°C	65	65	–	–	90	85	110	105	130	130

On the basis of IEC 60034-1

a – < 5000 kW

b – ≥ 5000 kW

Notes

1 The temperature rise limits are based above an ambient temperature of 40°C. For temperatures other than 40°C see Section 1.6.2(C).

2 For exact details refer to IEC 60034-1.

3 For other types of cooling methods refer to IEC 60034-1.

Table 11.2 Permissible stopping period of the motor after shutdown when it will require no temperature correction

0–50 kW	30 seconds
51–200 kW	90 seconds
201–5000 kW	120 seconds
Beyond 5000 kW	By agreement

According to IEC 60034-1

temperatures after the shutdown, the highest value must be taken. When the rotor temperature is also required it must be measured by recording the highest temperature recorded in the thermometers placed on the rotor bars and core, in squirrel cage motors, and on collector rings in wound rotor motors. A thermometer should be inserted as soon as the rotating parts come to rest.

Where the temperature can be measured only after the motor has stopped (as in temperature measurement by the resistance method), a cooling curve is plotted, by determining the test points as rapidly as possible. Extrapolation of the cooling curve is carried out to determine the temperature at the instant of shutdown. This may be achieved by plotting a curve with temperature/resistance readings as ordinates and time as the abscissa using semi-logarithmic graph for the resistance and a logarithmic scale for the time. This curve can be plotted on semi-logarithmic graph paper similar to that shown in Figure 9.5(b) to obtain a straight-line plot of resistance versus time to help the correct extrapolation. The following are the recommended methods to determine the temperature rise:

1. Resistance method – this is the most preferred method for motors up to 5000 kW.
2. Embedded temperature detector (ETD) method–this method is used for stator windings of 5000 kW and above as in IEC 60034-1.
   Note
   For motors 201–5000 kW – both the resistance or the ETD method may be used.
3. Thermometer method–this is recommended only when both resistance and ETD methods are not practicable.

Resistance method

This is the preferred method. The temperature of the winding is determined by observing the increase in resistance of the winding with respect to the cold resistance measured.

The resistance must be measured with extreme care and accuracy, since a small error in measuring the resistance will cause a much larger error in determining the temperature rise. When the temperature of the winding is to be determined by the resistance, the temperature of the winding before the test, measured either by thermometer or by ETD, may be considered as the cold temperature for the resistance measured. The machine must be left cold for at least 12 to 24 hours, depending upon the size of the machine, to obtain a stable reading.

For copper windings, the temperature rise t_2–t_a may be obtained from the ratio of the resistance by

$$\frac{R_1'}{R_1} = \frac{235 + t_2}{235 + t_1}$$

where

t_a = temperature (°C) of cooling air or gas at the end of the test
t_2 = temperature (°C) of the winding at the end of the test
R_1' = resistance of the winding at the end of the test
t_1 = temperature (°C) of the winding (cold) at the moment of the initial resistance measurement and
R_1 = initial resistance of the winding (cold)

ETD method

Embedded temperature detectors are resistance temperature detectors (RTDs) or resistance thermometers or thermocouples, built within the machine during manufacture at points that are not accessible when the machine has been assembled. This method is generally employed for the likely hot spots of a machine such as the slot portion and the overhangs of the stator windings.

At least six detectors are built within the machine, suitably distributed around the circumference and placed between the layers along the length of the core where the highest temperature is likely to occur. Each detector is installed in intimate contact with the surface, whose temperature is to be measured and in such a way that the detector is effectively protected from contact with the cooling air. A detector embedded beneath the winding layer inside the slot is of little consequence for it will detect the temperature of the core and not of the winding. The location of the detectors must be as follows:

- For two coil sides per slot: When the winding has two coil sides per slot, each detector must be located between the insulated coil sides within the slot (see Figure 12.42).
- For more than two coil sides per slot: When the winding has more than two coil sides per slot, each detector must be located in a position between the insulated coil sides at which the highest temperature is likely to occur.
- Since overhangs are vulnerable parts of a stator winding, detectors can also be placed within them (Figure 12.39).

Note The embedded temperature detector method is inappropriate for stator windings, which have only one coil side per slot, in such cases the resistance method must be used with the same limits of temperature rise. For checking the temperature of such a winding in service, an embedded detector at the bottom of the slot is of little use because it would give mainly the temperature of the iron core. A detector placed between the coil and the wedge will follow the temperature of the winding much more closely and is, therefore, better for check tests, although the temperature there may also be a little less than the actual one.

Thermometer method

This method is applicable where neither the embedded temperature detector nor the resistance method is possible. The thermometer method is also recognized in the following cases:

- When it is not practical to determine the temperature rise by the resistance method, as in the case of low resistance windings, especially when the resistance of joints and connections form a considerable percentage of the total resistance.
- Single-layer windings, revolving or stationary and
- When, for reasons of mass production, the thermometer method alone is used, although the resistance method would be possible.

In this method, the temperature is determined by thermometers applied to the accessible surfaces of the windings of the motor (see also Figure 10.10). The term 'thermometer' may include mercury or alcohol bulb thermometers as well as embedded thermocouples and resistance thermometers, provided the latter are applied to points accessible to the usual bulb thermometer also.

When bulb thermometers are employed where there is a likelihood of a magnetic field, alcohol thermometers should be preferred to mercury thermometers, as the latter are unreliable under such conditions.

Measurement of cooling air or gas temperature during test

The cooling air temperature should be measured by several thermometers placed at different points around and half-way up the motor, at a distance of 1–2 m and protected from heat radiation and draughts. The value to be adopted for the temperature of the cooling air or gas during a test should be the mean of the readings of the thermometers placed as mentioned above, taken at equal time intervals during the last quarter of the duration of the test.

In order to avoid error, due to time lag in the temperature measurement of large motors and variation in the cooling air or gas temperature all reasonable precautions must be taken to reduce these variations and errors as much as possible.

In cooling by means of forced ventilation, or where the machine has water-cooled air or gas coolers, the temperature of the air or gas, where it enters the motor must be considered as the cooling air or gas temperature. For motors fitted with heat exchangers the temperature reading of incoming air or gas or water should also be taken.

Cooling air temperature

The motor may be tested at any convenient value of cooling medium temperature less than 40°C. But whatever the value of this cooling-medium temperature, the permissible rise of temperature during test should not exceed those shown in Table 11.1.

In motors intended to operate under conditions in which the maximum cooling air temperature may exceed 40°C, the temperature rise as given in the relevant specification must be reduced as follows:

- By 5°C if the temperature of the cooling air exceeds 40°C by 5°C or less
- By 10°C if the temperature of the cooling air exceeds 40°C by more than 5°C but not more than 10°C and
- By agreement if the temperature of the cooling air is more than 10°C above 40°C.

Temperature rise of bearings

The temperature rise of bearings may be measured as follows:

- For sliding contact bearings (sleeve or thrust bearings) the temperature readings must be taken from as near to the bearing surface as possible.
- For ball and roller type bearings the temperature readings must be taken at the stationary race.
- For oil lubricants it is customary to measure the temperature in the oil reservoir.
- In forced lubricating systems, incoming and outgoing temperature readings may be taken.

Note

1 The permissible temperature rise of the bearings will depend upon the type of lubricant used and the recommendations made by the lubricant and bearing manufacturers.

2 It may not be possible to measure the temperature rise of the bearings at the races in all cases. In such a case, it may be permissible to measure the temperature for ball and roller type bearings at the stationary race or at the bearing cover.

Temperature correction

1 For motors specified for operation at an altitude higher than 1000 m, but not in excess of 4000 m, the correction may be made as shown in Table 1.8.

2 A temperature rise test may be carried out at any convenient cooling air temperature. When the temperature of the cooling air during the test is lower than the stated site cooling air temperature by less than 30°C, no correction should be made on account of such a difference. When the temperature of the cooling air is lower by more than 30°C, the permissible temperature rise on test should be the permissible temperature rise under specified site conditions, reduced by a percentage numerically equal to one-third of the difference between the specified temperature of the cooling air at site and the temperature of cooling air on test, where both temperatures are expressed in degrees Celsius.

Example 11.1

If the specified temperature of the cooling air at site is 48°C and the temperature of the cooling air during test is 17°C (a difference of more than 30°C), the reduction in temperature rise to take account of this difference will be:

$$\frac{48-17}{3} \simeq 10.3$$

The permissible temperature rise on test will therefore be 100 – 10.3% = 89.7% of the recommended temperature rise. These reductions apply to all the classes of insulation as indicated in Table 11.1 and the test is to be carried out at the manufacturer's works.

11.4 Load test

Tests on load are conducted to determine the performance of the machine, such as its efficiency, power factor, speed and temperature rise etc. For all tests, a machine with load should be properly aligned and securely fastened. Load characteristics are obtained by taking readings at high loads, followed by reading at lower loads. This is usually carried out at 125%, 100%, 75%, 50% and 25% of the full load values.

Methods of loading

1. *Brake and pulley method (usually for very small motors).* Considerable care needs be taken in the construction and use of the brake and pulley. When conducting this test conditions should be such that a scale pointer remains practically stationary at any given load. Proper cooling, preferably water cooling, should be provided for the pulley.
2. *Dynamometer method (for medium-sized motors, say up to 500 h.p.).* The output of an induction motor may be calculated by

$$P_r = \frac{T_r \cdot N_r}{974} \text{ kW} \qquad (1.8)$$

3. *Calibrated machine.* When brake and pulley or dynamometer methods are not possible, the test motor may be loaded onto a calibrated generator. The efficiency curve of the generator must be available.

   When it is not possible to conduct any of the above three methods, the test motor may be loaded onto an uncalibrated generator or any other loading device.

11.4.1 To determine efficiency

By the input–output method

As noted above, efficiency may be determined by adopting any of the following three methods:

- Brake and pulley
- Dynamometer and
- Calibrated machine.

By summation of losses

Calculation of efficiency is based on the readings obtained after the heat run test when the machine has achieved thermal stability. The losses will fall into following four groups:

1. Core friction and windage loss (obtained from the no-load test)
2. Stator copper loss (primary loss)
3. Rotor copper loss (secondary loss)
4. Stray load loss (hysteresis and eddy current core loss).

The procedure to be followed is as follows:

- From the resistance measured across the stator line terminals at the conclusion of the no-load test, calculate the stator winding resistance R_1.
- Calculate the no-load stator copper loss: $i^2 \cdot R_1$ watts.
- Subtract the no-load stator copper loss from the stator input power $P_{n\ell}$ at no-load, i.e. $(P_{n\ell} - i^2 \cdot R_1)$. This is the net no-load loss made up of core, friction, windage and stray losses.
- Calculate the total stator winding resistance: $R_{1\text{hot}} = 1.5$ (1.5 for Δ-connected, and 0.5 for Y-connected windings, Figure 11.2) × cold values of the resistance, measured across the stator line terminals, corrected to the required temperature. The required temperature values will be:

For class A	75°C
For class E	90°C
For class B	95°C
For class F	115°C
For class H	130°C

- Calculate the stator copper loss on load: $I_r^2 \cdot R_{1\text{hot}}$.
- Add the net no-load loss and stator copper loss on load and subtract their sum from the stator input power measured on load. The remainder is the power input to the rotor.
- Calculate the rotor copper loss (input to the rotor × percentage slip on load)
- Subtract this rotor copper loss from the rotor input.
- Subtract the stray loss to give the motor output for nominal full load. The amount of stray loss is normally taken as 0.5% of the nominal power output of the machine. The stray losses at other values of loads are obtained from:

$$\frac{(\text{required stator current})^2}{(\text{full load stator current})^2} \times \text{stray loss at full load}$$

  After deducting the stray loss, the resultant kW gives the machine output.

- Efficiency, $\eta = \dfrac{\text{kW output}}{\text{kW input}} \times 100\%$

  As a check, add together the net no-load loss, the stator copper loss on load, the rotor copper loss on load and stray loss to give the total losses (total fixed loss plus load loss):

$$\text{Efficiency, } \eta = \left(1 - \frac{\text{total kW losses}}{\text{kW input}}\right) \times 100\% - 0.5$$

  The two must tally.

11.4.2 Slip measurement

For the range of load for which the efficiency is determined, the measurement of slip is very important. To determine slip by subtracting from the synchronous speed the value of speed, obtained through a tachometer is not recommended. The slip must be directly measured by one of the following methods:

1. Stroboscopic
2. Slip-coil
3. Magnetic needle
4. Any other suitable method.

Methods (2) and (3) are suitable for machines having slip of not more than 5%.

Stroboscopic method

On one end of the motor shaft a single black radial line is painted upon a white background. The slip is easily measured by counting the apparent backward rotations of the black line over a given period of time.

Slip-coil method

A suitable slip-coil, having approximately 700 turns of 1 mm diameter insulated wire, is passed axially over the motor and its two ends are connected to a centre-zero galvanometer. When the motor is running, the galvanometer pointer will oscillate. The number of oscillations should be counted in one direction only, that is to the left or to the right, for a period of, say, 20 seconds.

The following formula will determine the percentage slip:

$$S = \frac{n \times 100}{t \cdot f}\,\%$$

where

S = slip (%)

n = number of oscillations

t = time in seconds taken for n oscillations, and

f = supply frequency in Hz.

Magnetic needle method

In this method a magnetic needle suspended on a sharp point (so that it can rotate freely) is placed on the body of the motor in the horizontal plane. The needle will oscillate and the number of oscillations should be counted for a period of, say, 20 seconds. The percentage slip is then calculated by the formula given above.

11.4.3 Power Factor measurement

The Power Factor may be measured by one of the following three methods:

- Watt to volt-ampere ratio
- Two-wattmeter
- Power Factor meter

Watt to volt-ampere ratio method

The Power Factor is obtained by the ratio of the algebraic sum of wattmeter readings to volt-ampere readings. For a three-phase system:

$$\text{Power Factor} = \frac{\text{Watts}}{\sqrt{3} \times \text{line volts} \times \text{line amperes}}$$

Two-wattmeter method

On a three-phase motor where the load is pulsating the Power Factor may be checked by the following formula, obtained from independent wattmeter readings:

$$\text{Power Factor} = \frac{1}{\sqrt{1 + 3\left(\frac{W_1 - W_2}{W_1 + W_2}\right)^2}}$$

where

W_1 = the higher of the two readings and

W_2 = the lower of the two readings.

If W_2 gives a negative reading it should be considered as a minus quantity. From the above formula, graphs can be plotted for Power Factor versus (W_2/W_1), W_2/W_1 being the ratio of lower wattmeter reading to the higher wattmeter reading.

If W_2 is negative, the ratio of (W_2/W_1) should be considered as a minus quantity. The falling curves should be designated 'for (W_2/W_1)' and the rising curves 'for $(+W_2/W_1)$'. Similarly, ordinates on the left-hand side should be designated for $(-W_2/W_1)$ and on the right-hand side for $(+W_2/W_1)$. See Figure 11.3.

Note If two values of the Power Factor determined by the watt to volt-ampere ratio and two-wattmeter methods do not tally for a three-phase motor, the test may be repeated to eliminate the error. However, where the load is fluctuating, a Power Factor determined by a two-wattmeter method will be higher than that determined by the watt to volt-ampere ratio method. In this case, the higher value should be taken as the correct reading. The difference is due to the inclusion of a pulsating component of current in volt-amperes, which is a function of load rather than of the motor itself. The Power Factor determined from the ratio of wattmeter reading is not affected by the presence of a pulsating current.

Power Factor meter method

In this method, a Power Factor meter is directly connected in the circuit and a direct reading is obtained at any loading.

11.4.4 Overspeed test

All motors are designed to withstand 1.2 times the maximum rated speed. The test is simple and may be carried out by running the motor for 2 minutes at the higher speed. After the test, the motor must have no deformation or any fault that may prevent it from operating normally.

11.4.5 Test for speed–torque and speed–current curves

The speed–torque characteristic is the relationship between the torque and the speed, in the range from zero to synchronous speed. This relationship, when expressed as a curve, will include breakdown torque (pull-out torque), pull-up torque and starting torque. The speed–current characteristic is the relationship of the current to the speed.

Methods

Speed–torque and speed–current tests may be carried out by the following methods:

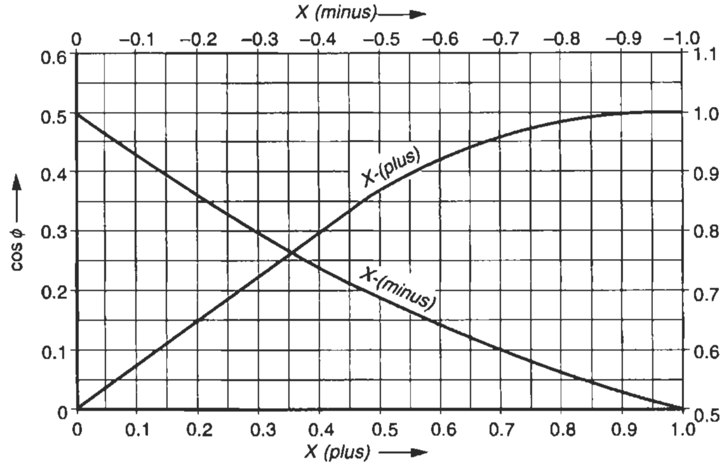

$$\cos\phi = \frac{1}{2}\cdot\sqrt{\frac{(1+X)^3}{(1+X^3)}}$$

$X = \frac{W_2}{W_1}$ = ratio of watt meter readings of like polarity.

$-X = -\frac{W_2}{W_1}$ = ratio of watt meter readings of unlike polarity.

Figure 11.3 Power Factor versus ratio of watt meter readings

- Dynamometer
- Pony brake
- Rope and pulley
- Calibrated machine.

Readings of voltage, current and speed should be taken. The torque value is obtained directly by the dynamometer, pony brake and rope and pulley methods and indirectly by the calibrated machine method. Speed–torque and speed–current tests must be conducted at a rated voltage or as near to this as practical. When it is necessary to establish values of current and torque at the rated voltage, based on tests made at reduced voltage, the current may increase by a ratio higher than the first power of the voltage and the torque by a ratio higher than the square of the voltage due to possible saturation of flux leakage paths. See also Figure 27.2(b) and note under serial number 9 Section 7.19 for more clarity. This relationship varies with the design and, as a first approximation, is sometimes taken as the current varying directly with voltage and torque with the square of the voltage.

It is therefore necessary to take precautions during the test to avoid a excessive temperature rise and consequent damage to the windings. For wound rotor motors, speed–torque and speed–current tests may be taken between synchronous speed and the speed at which the maximum torque occurs.

Pull-up torque

The motor should be mounted with a suitable loading arrangement and the rotor fully locked. The rated voltage at the rated frequency will then be applied to the motor terminals in the locked rotor condition. The loading on the motor will then be reduced slowly so that the motor can start and pick up speed. The value of pull-up torque at which the rotor picks up speed and attains speed corresponding to pull-out torque condition must be noted.

Pull-out torque

The motor should be mounted with a suitable loading arrangement. The rated voltage, at the rated frequency, is then applied to the motor terminals at the no-load condition. The load on the motor may then be gradually increased, and the maximum load at which the motor stalls noted. The torque determined at this point is the pull-out torque.

Note

1 The motor should be immediately disconnected from the supply when it stalls.

2 The motor should not be kept in the locked rotor condition for more than a few seconds to avoid damage to the windings.

11.4.6 Vibration measurement test

The vibration limits have been classified into two groups:

1. For shaft heights 56 mm and above, ISO 2373 (IEC 60034-14) has prescribed three categories of vibration levels in terms of vibration velocity, one for normal use, *N*, and the other two for precision applications, i.e. reduced level *R* and special-purpose *S*. When required other than normal, these must be specified by the user to the manufacturer. Machines with a higher degree of balance should be used only when this is essential. Such machines may be far too expensive to produce, and sometimes not commensurate with the application.
2. For shaft heights more than 400 mm, IEC 60034-14 prescribes the vibration level, in terms of double amplitude vibration, which can also be derived from the velocity of vibration, using the following formula:

$$a = 0.45 \times \frac{V_{\text{r.m.s.}}}{f}$$

where

a = double amplitude of vibration displacement, peak to peak (mm)
$V_{\text{r.m.s.}}$ = r.m.s. value of velocity of vibration (mm/s)
f = frequency of vibration, which is approximately equal to the supply frequency in Hz.

Both these levels are indicated in Table 11.3. For more details and for conducting the vibration test, reference may be made to IEC 60034-14.

11.4.7 Measurement of noise level

When measuring the noise level, i.e. the limiting mean sound power level in dB for airborne noise emitted by a machine, reference may be made to the following IEC and ISO publications:

IEC 60034-9 – For recommended values of noise limits in dB. A decibel (dB) is the unit of sound power level and is derived from the unit of sound measurement ('bel'), so called after the American inventor Alexander Graham Bell and

$$1\ \text{dB} = \frac{1}{10}\ \text{bel}$$

ISO 1680-1, Acoustics – Test code for the measurement of airborne noise emitted by rotating electrical machinery – Part 1: Engineering method for free-field conditions over a reflecting plane.
ISO 1680-2, Acoustics – Test code for the measurement of airborne noise emitted by rotating electrical machinery – Part 2: Survey method.
ISO 3740, Acoustics – Determination of sound power levels of noise sources – Guidelines for the use of basic standards and for the preparation of noise test codes.

11.4.8 Verification of dielectric properties

Power frequency withstand or HV test

This test is conducted only when it has been determined that the insulation resistance, measured as noted in Section 9.5.3 is acceptable. The test should be performed immediately after the temperature-rise test on those occasions when the latter test is also to be carried out.

This test reveals any weakness of the insulation or insufficient clearance between coils or between winding and core. It consists of the application of a high voltage, as shown in Table 11.4, between the windings and the frame (or cores).

Windings that are not under test and all other metal parts must be connected to the frame during the test. The windings under test should be completely assembled. The test voltage should be of power frequency and as near to the sine waveform as possible. Component parts, such as space heaters, thermostats and resistance temperature detectors, which are connected to parts other than the power line, must be tested at twice their rated voltage, plus 1000 volts, with all other windings and components connected together and then connected to the frame (core). Insulation breakdown during the application of a high voltage should be considered as a dielectric failure. The test should commence at a voltage not more than one-half of the full test voltage. The voltage should be increased to the full value in not less than 10 seconds and this voltage will then be maintained for one minute. At the end of this period, the test voltage will be rapidly diminished to one-third of its value before switching off.

The test voltages for wound rotors, reversing and brake motors are also indicated in Table 11.4. Repetition of this test is not recommended to avoid excessive stresses on the insulation. However, when this becomes necessary such as at site before commissioning, the test voltage must be limited to only 80% of the actual test voltage. After the test, the insulation resistance must be checked again, to make sure that no damage has been caused to the windings.

Dielectric loss factor or dissipation factor tan δ

This is a test to monitor the quality and dielectric behaviour of the insulating system of high-voltage machines, 5 kV

Table 11.3 Limits of vibration levels when measured in a state of free suspension

Vibration grade[a]	*Speed* N_s^b *(r.p.m.)*	*Maximum r.m.s. value of the vibration velocity (mm/s) for shaft height H* (mm)			
		$56 \le H \le 132$	$132 < H \le 225$	$225 < H \le 400$	$H > 400$
N	> 600 ≤ 3600	1.8	2.8	3.5	2.8
R	> 600 ≤ 1800	0.71	1.12	1.8	1.8
	> 1800 ≤ 3600	1.12	1.8	2.8	1.8
S	> 600 ≤ 1800	0.45	0.71	1.12	
				N.A	
	> 1800 ≤ 3600	0.71	1.12	1.8	

Based on IEC 60034-14

[a] Vibration grade signifies the accuracy of rotor balancing, e.g. *N* = normal, *R* = reduced, *S* = special. This may be based on the type of installation and the accuracy of the function the motor may have to perform.

[b] For both 50 or 60 Hz systems.

Note The level of vibration at site may be higher than that mentioned above, perhaps due to the foundation or the coupling of the load. This must be checked and adequate precautions taken to avoid excessive vibrations.

Table 11.4 Test voltages for conducting dielectric tests

Motor size and rating	*Test voltage (r.m.s.)*	*Example*
1 Stator windings		
(i) LT motors < 1 kW and rated voltage (V_r) < 100 V	500 V + $2V_r$	
(ii) All sizes and ratings of motors	1000 V+ $2V_r$ (minimum 1500 V) (Same as col. 5 Table 11.6)	(a) For 220 V motors, the test voltage = 1000 + 2 ×220, i.e. minimum 1500 V (b) For 11 kV motors, the test voltage = 1 + 2 × 11 = 23 kV.
2 Rotor windings (for wound motors)		
(i) Non-reversing motors	1000 V + 2 RV	*RV* = rated open circuit standstill voltage across the slip-rings
(ii) Motors suitable for reversing duty or braking during running by reversing the I/C supply	1000 V + 4 RV	
3 If high-voltage test needs be repeated at site during commissioning	At 80% of the above	–
4 Completely rewound windings	Full test voltage as for S Nos 1 and 2	–
5 Partially rewound windings	75% of the test voltage as for S Nos 1 and 2	–
6 Overhauled machines	$1.5V_r$ minimum being 1000 V	–

Based on IEC 60034-1

and above and ratings 1000 h.p. and above, during the course of manufacture of resin-rich formed coils. For details on tan δ, see Section 9.6.1 and Figures 9.7 and 9.8. This is mainly an in-house stage inspection for such coils. It is conducted on each individual coil, during the course of manufacture, to check for adequate insulation impregnation and quality of insulation, before insertion into the stator slots. The same process would apply to the rotor slots of a wound rotor when the rotor open circuit voltage is a minimum of 5 kV, which is rare. This is commonly known as the dielectric loss factor or dissipation factor of a motor winding coil and is the basic measure of the condition of the insulation to ground. It also gives an idea of ageing or the general condition of the insulation. With the help of this data, the processing quality of the insulation of the coils can be easily monitored as well as the condition of the insulation between the conductor laminations, the inter-turn insulation and the insulation of the end windings (over-hangs) etc. This factor is also useful in determining the insulation condition of each slot of the stator or the rotor.

To carry out this test on a wound machine (post-impregnated) would be pointless as the quality of the insulation of such coils cannot be altered after they have been inserted into the slots. However, the test is carried out on a completed identical machine to establish reference data for field tests. Random sample testing is, however, possible with two identical coils placed in the slots. The test sample of slots can also be made. For more details see Section 9.6 and IEC 60894.

Method of measurement and acceptance norms

A Schering bridge* or an equivalent type of bridge is used to determine the values of loss factors tan δ and Δ tan δ, i.e. the increase in tan δ values with the voltage. A graph is then plotted between the behaviour of tan δ with the applied voltage as shown in Figure 9.8. This graph also provides basic reference data for field checks before the motor is energized.

The loss tangent should be measured on the samples at room temperature at voltages varying from 20% to

---

*The basic principle of these methods is to charge a capacitor up to the specified test voltage and then discharge it through the coil under test.

Table 11.5 Highest permissible values of loss tangent or dielectric loss factor at rated voltages not exceeding 11 kV

1	*2*	*3*	*4*	*5*
tan $\delta_{0.2V_r}$	$\frac{1}{2}$ (tan $\delta_{0.6V_r}$ – tan $\delta_{0.2V_r}$)		(Δ tan δ – per step of $0.2V_r$)	
100% samples 30 × 10^{-3}	95% samples 2.5 × 10^{-3}	Remaining 5% samples 3 × 10^{-3}	95% samples 5 × 10^{-3}	Remaining 5% samples 6 × 10^{-3}

Note If more than 5% of the samples show test results in the range of columns 2 and 3, or between columns 4 and 5, the test can be regarded as satisfactory. Otherwise the test can be continued with an equal number of further samples, if necessary, even up to the total number of bars or coil sides.

100% of the rated voltage at intervals of 20%. The initial value of tan $\delta_{0.2}V_r$ and the increment Δ tan δ, i.e. $\frac{1}{2}$ [tan $\delta_{0.6V_r}$ − tan $\delta_{0.2V_r}$] per measuring step should not exceed the values indicated in Table 11.5 for the rated voltages up to 11 kV.

It can be seen that up to 1.1 times the rated voltage (V_r), the tan δ value remains almost constant, and at $1.2V_r$ it increases slightly. At higher voltages it increases sharply, and may become too high to cause a discharge sufficient to char the insulation if this voltage is allowed to exist for a longer period.

11.4.9 Impulse voltage withstand test of the insulation system for rated voltages 2.4 kV and above for machines wound with formed coils

As discussed in Section 17.5 a machine may be subjected to voltage surges due to external causes (lightning) or internal causes (switching). By the power frequency HV test or the dissipation factor, as in Section 11.4.8, or insulation resistance tests as Section 9.5.3, the surge withstand level of the insulating system cannot be determined. Hence, the need for an additional impulse voltage withstand capability test of a coil for HV systems. The increasing application of vacuum- and gas-filled (SF_6) circuit breakers and contactors for switching of HT machines, has led to the need for a surge voltage withstand test on the multi-turn coils of a machine to account for the surges generated by a re-striking pheno-menon, such as that caused by the closing or interrupting of contacts.

Until a few years ago, there was no widely accepted standard for a voltage endurance test of the rotating machines. Different agencies had adopted different practices on different assumptions, pending a final decision by the IEC working committee TC-2 of IEC 60034-15. The committee submitted its report in 1988 and the following test data, which are now universally adopted, are based on this report.

The impulse test by means of a directly injected steep-fronted wave cannot be performed on a fully assembled machine as the bulk of the voltage, if the front of the wave is less than 1μs, will appear across the first few turns only. Also, in the event of a failure, the whole winding must be scrapped. The impulse test is therefore performed on completed individual resin-rich formed coils only after insertion into the slots.

The impulse test is basically an in-house coil insulation withstand test for surge voltages and forms a part of the test requirement for HT machines with resin-rich formed coils of 2.4 kV and above. Once the machine is assembled, such a test is unnecessary, as it may not be able to reveal deficiencies, if any, in the insulation of the coils deep inside the slots. Moreover, if a failure is noticed on the assembled machine, there is no option but to scrap the whole winding.

To assign the impulse level

In Table 11.6 the values of column 2 relate to normal operating conditions. Abnormal conditions may prevail when the machine is exposed to overhead lines, the

Table 11.6 Impulse withstand voltage levels for resin-rich formed coils of HT machines

Type of impulse	*Winding switching impulse withstand level, when subjected to switching impulses, with following wave fronts*			*Winding lightning impulse withstand level 1.2/50 μs impulse, phase to ground kV (peak)*	*Rated power frequency withstand voltage (r.m.s.) (as in Table 11.4 for stator windings) kV*
	Between 0.2 and 0.4 μs		*0.2 μs (average value)*		
Line voltage *kV$_{r.m.s.}$* *1*	*Normal design level phase to ground kV (peak)* 2	*Special design level phase to ground kV (peak)* *3*	*3a*	*4*	*5*
3.3	8.1	13.5	12	18.2	7.6
6.6	16.2	26.9	20	31.4	14.2
11.0	26.9	44.9	32	49.0	23.0
13.8	33.8	56.3	39	60.2	28.6
Design criteria	3 p.u. kV	5 p.u. kV	0.65 $(4V_r + 5)^a$ kV	$(4V_r + 5)^b$ kV	$(2V_r + 1)^c$ kV

Note

V_r = line voltage in kV (r.m.s.)

p.u. = per unit voltage, which is the peak value of phase voltage in kV i.e. $\sqrt{2} \cdot \frac{V_r}{\sqrt{3}}$

[a] IEC 60034-15 has prescribed an average impulse voltage, considering the average characteristics of the machine windings and the switching conditions. One may therefore decide between columns 3 and 3a, depending upon the exposure of the machine to the internal switching surges and surge protection devices if provided with the motor.

[b] IEC 60034-15 recommends these values to be rounded off to the nearest whole number. The values noted above are not rounded off for more clarity.

[c] See also Table 11.4.

interrupting device has multiple re-strikes during a switching operation, or at locations expected to have surges higher than normal due to transferences, such as at a power generating station. For all these conditions, higher values of impulse levels, as in column 3 of Table 11.6, may be chosen or surge suppressors installed.

Test recommendations

1. The test coils should be finally processed and then embedded into the slots.
2. The number of sample coils must be two unless changed deliberately.
3. All coils that are subjected to this test must fulfil the test requirements. In the case of a failure, investigations must be carried out to establish the cause and the same rectified before undertaking the insulating process on the next batch of coils.

Test procedure

1. *For inter-turn insulation*
   - The test should be performed by applying the voltage between the two terminals of the sample coils.
   - The inter-turn test voltage must be generated by damped oscillating discharge of capacitors or with the help of a high-voltage generator to pulse a fast-fronted damped oscillating voltage wave. In order to obtain an even distribution of the impulse between the coil turns, the front time of the first voltage peak must not be below 0.5 μs. The resultant waveform produced by the coil, is displayed on a storage oscilloscope, and can be compared with the waveform of a known good coil. Figures 11.4 and 11.5 show a clear difference in the waveforms between a good and a defective coil.
   - The voltage peaks between the terminals of the sample coils should be 50% of the value given in column 4 of Table 11.6, i.e. $^1/_2(4V_r + 5)$ kV.
2. *For main insulation* (ground and inter-turn insulation withstand test)

   Any of the following methods can be adopted:
   - **Power frequency voltage test**
     - The HV test should be performed first by applying r.m.s. value $(2V_r + 1)$ kV for one minute, as shown in Table 11.4 between coil terminals and ground. Then the applied voltage should be increased at 1 kV/s up to $2(2V_r + 1)$ kV, and then reduced instantly at least at 1 kV/s to zero. If there is no failure, the test will be considered as successful, fulfilling the requirement of column 4, of Table 11.6. This procedure would give a test voltage equivalent to $2 \cdot \sqrt{2} \cdot (2V_r + 1)$ kV, which is even more than the values of column 4, i.e. $> (4V_r + 5)$ kV.
     - A d.c. test is also permitted by IEC 60034-15. The d.c. voltage should be at least 1.7 times the peak of the power frequency routine test voltage, i.e. a minimum of $1.7 \times \sqrt{2}(2V_r + 1)$kV.
   - **Impulse voltage test**

     The full test voltage of column 4 of Table 11.6, i.e. a standard lightning impulse of 1.2/50 μs, should be applied between the coil terminals and the ground. The number of impulses should be 5, unless agreed otherwise by the manufacturer and the user.

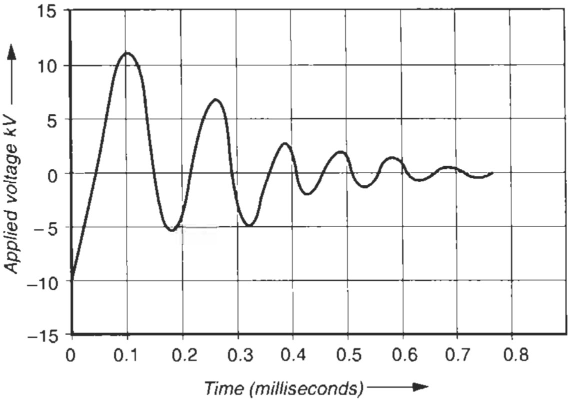

Figure 11.4 Voltage traces of a satisfactory coil (without interturn fault)

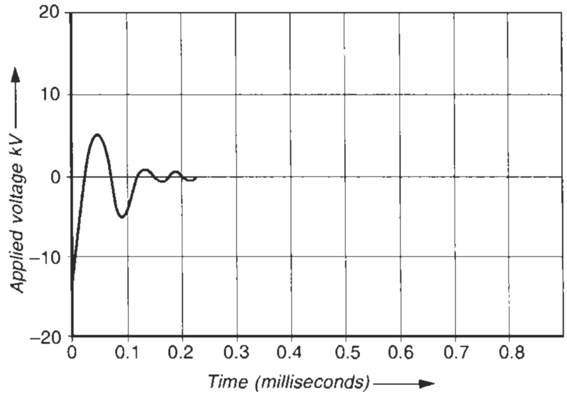

Figure 11.5 Voltage traces of an unsatisfactory coil (with interturn fault)

11.4.10 Principal considerations in framing the specification for impulse voltage withstand level and underlying the test procedures

1. When a steep-fronted voltage surge occurs between one terminal of the machine and the ground the corresponding phase does not instantly (during the rise time t_1 Figure 17.3) adjust to the same potential at all the points on the curve. Hence, two types of voltages develop in the machine winding, i.e.
   - Voltage between copper and ground, which can be called the transverse voltage, and the voltage along the copper which can be called as longitudinal voltage.
   - While the transverse voltage stresses the main wall insulation, the longitudinal voltage stresses the inter-turn insulation. The bulk of the components of both

kinds normally appear on the first or the entrance coil of the winding.

2. In practice, voltage surges can be of various shapes (Figure 17.2) and may even be so steep as to have a front time as low as 0.2 μs or less. For the purpose of the impulse test, however, only a standard lightning impulse, as defined by 1.2/50 (Section 17.6) can be considered.
3. The impulse level in column 4 of Table 11.6 has been so chosen that the machine winding will have a sufficiently high level of insulation to fit into the system of insulation coordination, as discussed in Section 17.11 and Table 11.6.
4. The test on a sample coil at 50% test voltage will indirectly represent the test on the whole machine, in that the sample coil is tested under almost the same conditions to which the whole machine would have been subjected when applied with the full test voltage of column 4 of Table 11.6.
5. Quantum of impulse voltage. There is no agreed calculation to determine the severity of impulse that must be applied to these two sample entrance coils as this varies from one machine to another and other factors such as:
   - Rise time t_1 (Figure 17.3) of the voltage impulse
   - Length of the entrance coil, and
   - Number of turns.

   As discussed in Section 17.8 the bulk of the voltage of a fast-rising impulse wave applied to the whole winding will appear across the entrance turns. This may vary from 40% to 90%, depending on the steepness of the wave front. Report TC-2 of IEC 60034-15 has recommended a value of 50% as adequate to meet general requirements. However, this value may be finally decided by the manufacturer of the machine in consultation with the end user, based on the surge-generating source (interrupting device), its likely front time, the type of machine and its exposure to external surge-generating sources.

11.5 No load test

The no-load test is a very informative method to determine the no-load current, core* and pulsation† losses, friction and windage losses, magnetizing current and the no-load power factor. The test also reveals mechanical imbalance, if any, performance of the bearings, vibration and noise level of the motor.

The motor is run on no load at a rated frequency and voltage, until the watts input becomes constant (to ensure that the correct value of friction loss is obtained). Readings of line voltage, current, frequency and power input are taken.

The watts input is the sum of the friction and windage losses, core loss and no-load primary loss $(I_{nl}^2 R_1)$. The sum of friction, windage and core losses is obtained by subtracting the primary copper loss $(I_{n\ell}^2 R_1)$ at the temperature of the test from the input watts. If the values of current and power are recorded, from about 130% normal voltage downwards, and a graph of power against voltage plotted, the core loss can be separated, from friction and windage losses.

Interception with the zero voltage axis, which represents friction and windage losses, may be found by plotting a second graph with the square of the voltage as the abscissa and the watts as the ordinate (Figure 11.6).

11.5.1 Locked rotor test

This test is conducted by supplying the stator windings with the rotor in the locked condition. In slip-ring motors, the rotor windings are also short-circuited. The test is carried out to determine the soundness of the rotor in squirrel cage motors, and to measure the starting current, power factor, starting torque and impedance. It also enables us to draw a circle diagram, for single squirrel cage rotor motors and wound rotor motors. This test may be carried out at a reduced voltage that will produce the rated current of the motor. The locked rotor torque test is not to be performed on a wound rotor motor. The starting torque in a wound motor has no relevance, as it can be varied as desired. The locked rotor current test is carried out on both squirrel cage and wound rotor motors. It should be recognized that testing induction motors in the locked rotor condition involves unusual mechanical stresses and a high rate of heating. Therefore, it is necessary that:

- The direction of rotation be established prior to this test.
- The mechanical method of locking the rotors must be strong enough to prevent injury to nearby personnel or damage to equipment.
- As the windings are heated rapidly, the test voltage must be applied as quickly as possible. Care should be taken to ensure that the motor temperature does not

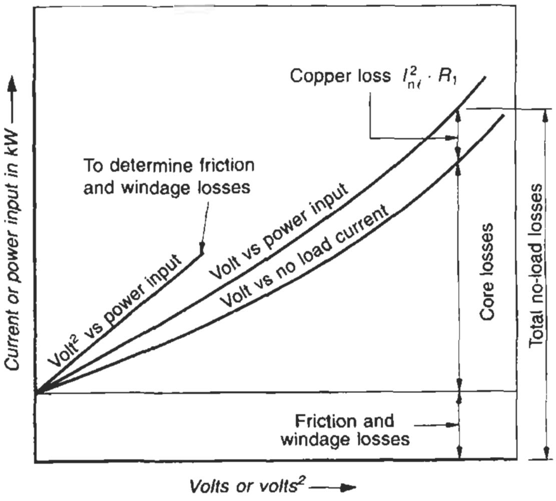

Figure 11.6 No-load curves to separate out no-load losses

---

*Core loss is the magnetizing or hysteresis loss and represents the iron loss of the machine.

†Pulsation loss is the harmonic loss of the machine.

exceed the permissible value for a given class of insulation.

The readings at any point should be taken within 6 seconds for motors of output 7.5 kW and below and 10 seconds for motors above 7.5 kW.

Measurement of starting torque, pull-out torque and pull-in torque

Any of the methods described in Section 11.4.5 may be adopted to measure the torques developed. The torque should be measured with the rotor in various positions, wherever possible. The minimum value should be taken as the starting torque. Readings of voltage, current, frequency and power input will also be taken. The starting torque and starting current may be extrapolated when the test is carried out at a reduced voltage. For extrapolation of the test results at rated voltage the test must be performed at least at three test voltages. At each test voltage, readings of voltage, current, torque, frequency and power input must be taken. The values of starting current and starting torque may then be extrapolated from these curves. The effect of magnetic saturation is not considered in this test method.

Alternate method

When the locked rotor torque cannot be measured by the dynamometer or other methods it may be accurately determined as follows:

$$\text{Torque} = \frac{974}{N_s} \times 0.9 \times (\text{input in kW} - \text{Stator } I_r^2 R_1 \text{ loss})$$

The factor 0.9 accounts for a 10% reduction in the torque as an arbitrary allowance for harmonic losses.

When the torque is determined by the above method, the voltage during the test should be so adjusted that the locked rotor current is approximately equal to the full load current. After the locked rotor test, the resistance of the stator windings should be measured and may also be considered for calculating the I^2R losses.

11.5.2 Open-circuit voltage ratio test for slip-ring motors

In slip-ring motors normal voltage and frequency are applied to the stator with the connection of the rotor brush gear open-circuited. The phase voltages induced in the rotor are then measured across the slip-rings.

11.5.3 Verification of degree of protection

We have defined the various types of enclosures adopted by various manufacturers to suit different locations and environmental conditions in Tables 1.10 and 1.11. Here we briefly discuss methods for testing these enclosures to check their compliance with defined requirements.

Table 11.7 Protection against contact with live or moving parts

First characteristic number	*Test requirements*
0	No test is required
1	The test is carried out with a sphere of 50 mm diameter. The sphere should not touch live or moving parts inside the enclosure.
2	(a) Finger test In LT motors, a standard test finger as shown in Figure 11.7 is used, connected by an incandescent lamp to one pole of a supply of at least 40 V, the other pole of the supply being connected to the parts intended to be live in normal service. All parts must be connected electrically. The lamp should not glow when an attempt is made to touch the bare live parts or insufficiently insulated parts. Insufficiently insulated parts may be covered with a metal foil connected to those parts that are live in normal service. Conducting parts covered with varnish or enamel only or protected by oxidation or by a similar process may be considered as insufficiently insulated. In HT motors, the clearance is verified with the minimum clearance required to withstand the dielectric test as in Section 11.4.8. (b) Sphere test The enclosure should not permit a ball of 12 mm diameter to enter the enclosure.
3	The test is carried out with a steel wire of 2.5 mm diameter. The wire should not go through the enclosure.
4	The test is carried out with a steel wire of 1 mm diameter. The wire should not go through the enclosure.
5	The test is carried out by using an apparatus shown in Figure 11.8, consisting of a closed test chamber in which talcum powder can pass through a sieve having square openings of 75 μm, and is held in suspension by an air current. The amount of talcum powder is supplied at 2 kg per cubic metre size of the test chamber. The enclosure under test is placed inside the chamber and is connected to a vacuum pump which maintains, inside the enclosure, a differential pressure equivalent to not more than a 200 mm column of water. The test is stopped at the end of two hours if the volume of the air drawn in during this period is from 80 to 120 times the volume of air in the enclosure under test. If, with a vacuum equivalent to a 200 mm column of water, it is not possible to draw air 80 times the volume of the enclosure under test, the test must be continued until the value is attained. In no case must the test be carried out for more than 8 hours. The permissible amount of talcum powder penetrating the enclosure should not affect operation of the equipment.
6	The test is similar as for number 5 but now no deposit of dust should be observed at the end of the test.

These tests, however, do not cover special requirements or environmental conditions such as

- Explosive areas or
- Unusual service conditions that may cause corrosion, fungi, etc.

These requirements may require a special construction, a pressurizing arrangement or more sealings at the joints to prevent entry of dust or exit of an arc taking place inside the enclosure, or special treatment to the housing and larger clearances or creepage distances etc. For more details see Sections 7.14, 7.15, 7.16 and 7.17. Here we have limited our discussions to the testing of electrical equipment as in Tables 1.10 and 1.11. For other compliance tests, there may be an agreement between the manufacturer and the user or a third-party agency, as noted in Section 11.7, for certifying the use of equipment for hazardous areas.

Note We have discussed the test procedures and tolerances in general terms. For more accurate test methods and tolerances see IEC 60529.

Tests for the first number as in Table 1.10 and IEC 60034-5: protection against contact with live or moving parts

These tests may be carried out as shown in Table 11.7.

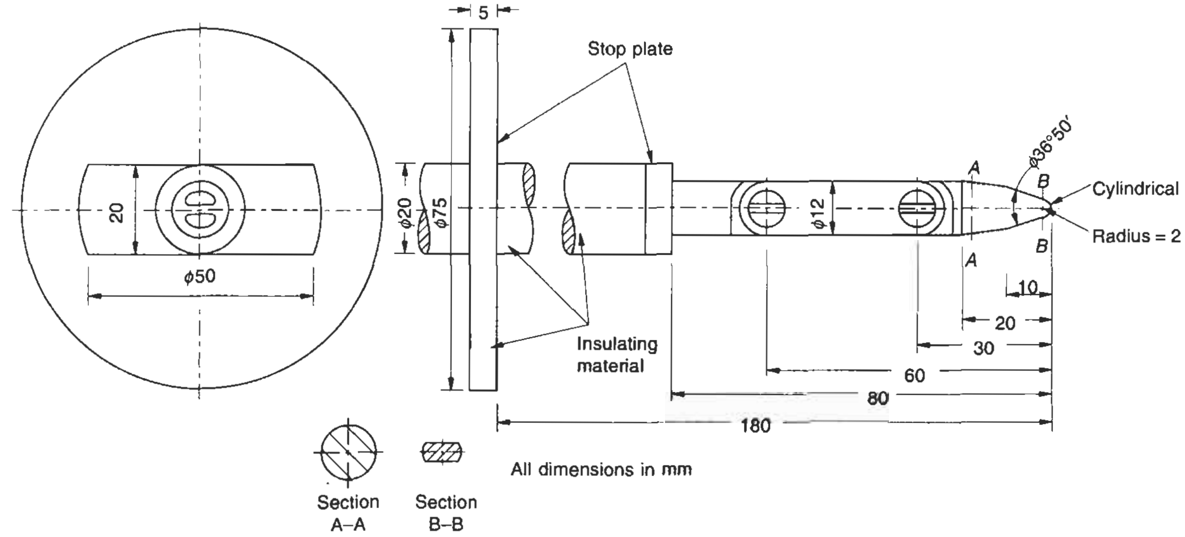

Figure 11.7 Standard test finger

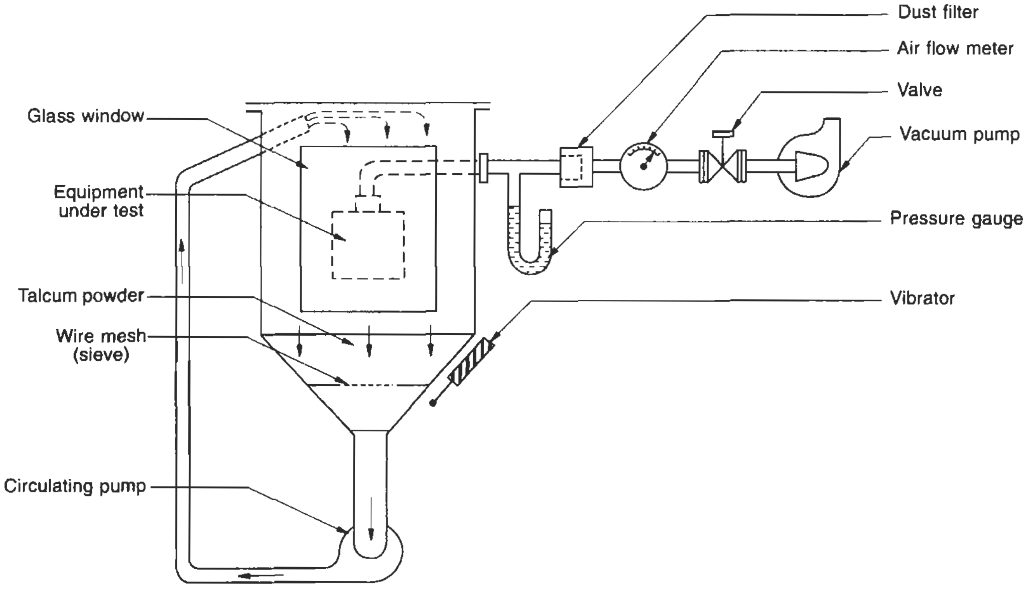

Figure 11.8 Apparatus for the verification of protection against dust, according to IEC 60034–5 or 60947–1

Tests for the second number as in Table 1.11: protection against ingress of water

These tests may be carried out as shown in Table 11.8.

11.6 Tolerances in test results

The test results so obtained will be subject to a tolerance as noted in Table 11.9, compared to data provided by the manufacturer based on their design data.

11.7 Certification of motors used in hazardous locations

Motors intended for such locations need special attention. Since such installations may be highly prone to explosion and fire hazards, third-party agencies are generally appointed by the government of a country to certify the use of particular equipment or device at such locations. These agencies, ensure that the equipment is designed and manufactured in conformity with the requirements of the relevant standards. It is mandatory on the part of a manufacturer, supplying equipment for such locations, to first obtain certification for a product from such agencies before it can be used for such installations. For instance, the Central Mining Research Institute (CMRI), Dhanbad, is the authorized agency in India which undertakes

- Scrutiny of design and constructional details
- Thorough testing of the machine.

Based on the test certificates of CMRI, approval certificates are issued by the relevant statutory authority.

Table 11.8 Protection against ingress of water

Second characteristic number	*Test requirements*
0	No test is required
1	The test is carried out by the apparatus illustrated in Figure 11.9. Water is used and adjusted so that the discharge is 3 to 5 mm of water per minute. The enclosure under test is placed for 10 minutes in its normal operating position below the dripping apparatus, the base of which should be larger than the enclosure under test. After the test the amount of water which might have entered the interior of the enclosure should not interfere with satisfactory operation of the equipment. No water should accumulate near the cable gland plate or enter the cables.
2	The test equipment is the same as described for degree of protection 1. But the enclosure under test is tilted up to an angle of ±15° in respect of its normal operating position successively, in two planes at right angles (to cover all four sides). The total duration of the test will be 10 minutes (2.5 minutes each side). The test results should be the same as for degree of protection 1.
3	The test is carried out by the apparatus illustrated in Figure 11.10(a). It consists of an oscillating tube, formed into a semi-circle, the radius of which is kept as small as possible, depending upon the dimensions of the enclosure under test, but not more than 1 m. For larger surfaces, a hand sprayer, as illustrated in Figure 11.10(b), may be used. During the test the moving shield is not removed from the spray nozzle. The water pressure is adjusted for a delivery of 10 litres/min. The test duration should be 1 minute/m^2 of the surface area under test, but for not less than 5 minutes. The tube is oscillated to describe an angle of 60° from the vertical in either direction. The duration of one oscillation will be about 2 seconds. The water supply should be at least 10 litres/min, at a pressure equal to a head of nearly 8 m of water (80 kN/m^2). The enclosure under test is mounted in its normal position on a turntable, the axis of which will be vertical and height variable, located near the centre of the semi-circle formed by the oscillating tube. The table is rotated to spray all parts of the enclosure equally. The enclosure should be kept under a spray of water for 10 minutes. The test results should be the same as for degree of protection 1.
4	The test is similar to that described for degree of protection 3 except that the oscillating tube will now oscillate through an angle of almost 180° with respect to the vertical in both directions and at a speed of 90° per second. The support for the equipment under test may be grid-shaped, so that no water is accumulated at the base. The duration of the test will be 10 minutes. For larger surfaces the second method as noted in Figure 11.10(b) may be adopted but the moving shield must now be removed from the spray nozzle. The rest of the details remain the same as noted for number 3, when using a hand sprayer. The test results should be the same as for degree of protection 1.
5	The test is carried out by washing down the test enclosures in every direction by means of a standard hose nozzle of 6.3 mm inside diameter, as illustrated in Figure 11.11, held at 3 m from the enclosure with a water pressure equal to a head of nearly 3 m of water ($\simeq$ 30 kN/m^2), enough to give a delivery rate of 12.5 litres/min. The duration of the test will be determined at 1 min/m^2 of the surface area under test, subject to a minimum of 3 minutes. The test results should be the same as for degree of protection 1.

Second characteristic number	*Test requirements*
6	The test procedure and test equipment is almost the same as for number 5 and generally as below: – Inside diameter of the test nozzle: 12.5 mm – Distance of the nozzle from the test enclosure: ≃ 3 m – Water pressure: almost 10 m of water ≃ (100 kN/m^2) – The above water pressure will give a delivery rate of 100 litres/min. Test duration: at 1 min/m^2 of the surface area under test, subject to a minimum of 3 minutes. After the test, there will be no penetration of water inside the enclosure.
7	The test is carried out by completely immersing the test enclosure in water so that the head of water above the lowest portion of the enclosure is a minimum 1 m, while the highest portion is a minimum 150 mm. Duration of the test will be 30 minutes. After the test there must be no penetration of water inside the enclosure. This test may also be carried out in the following manner. The enclosure must be tested for one minute, with an inside air pressure equal to a head of about 1 m of water. No air should leak during the test. Air leakage may be detected by submerging the enclosure in water, with the just covering the enclosure.
8	The test procedure will depend upon the actual application.

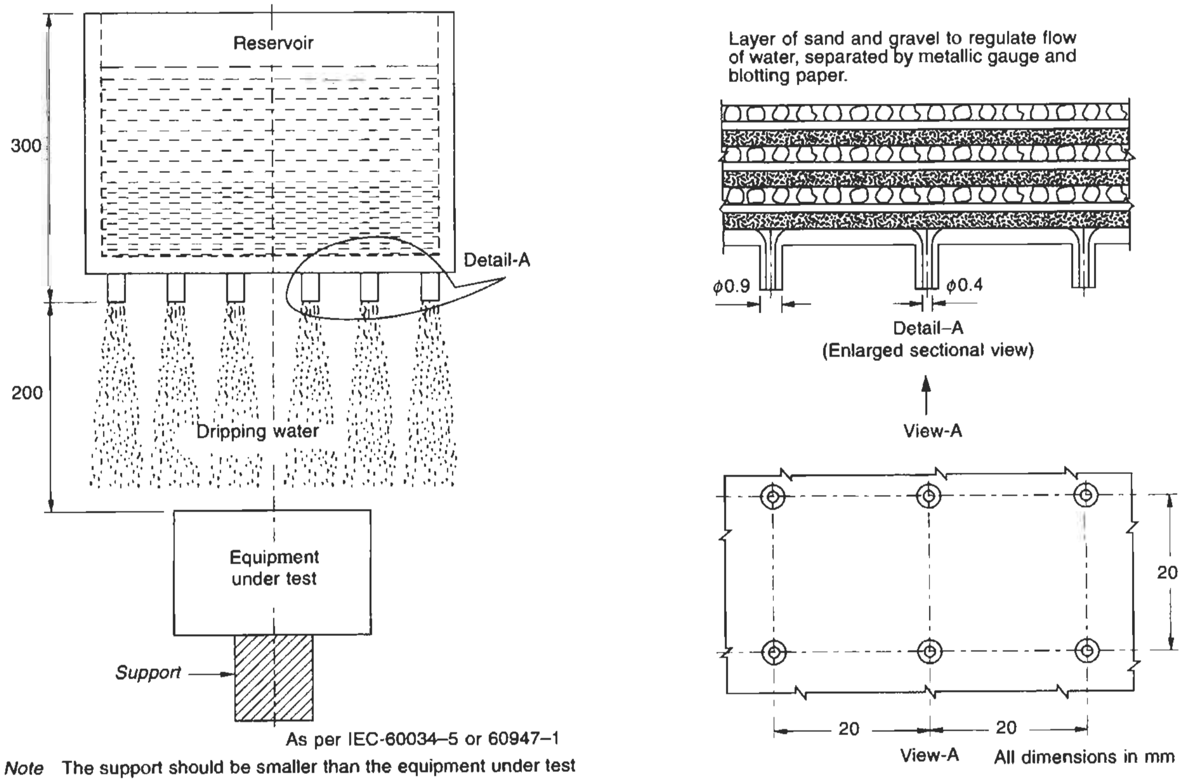

As per IEC-60034–5 or 60947–1

Note The support should be smaller than the equipment under test

Figure 11.9 Apparatus for the verification of protection against dripping water

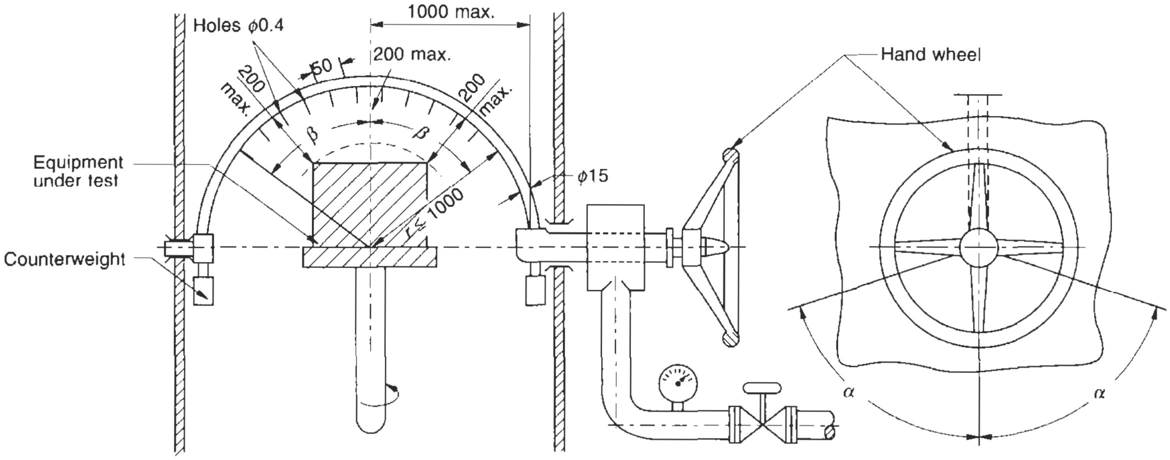

All dimensions in mm

For the second numeral	3	4
Spraying angle α	± 60°	≃ ± 180°
Surface covered β	± 60°	≃ ± 180°

As per IEC–60034–5 or 60947–1

Figure 11.10(a) Apparatus for splashing water

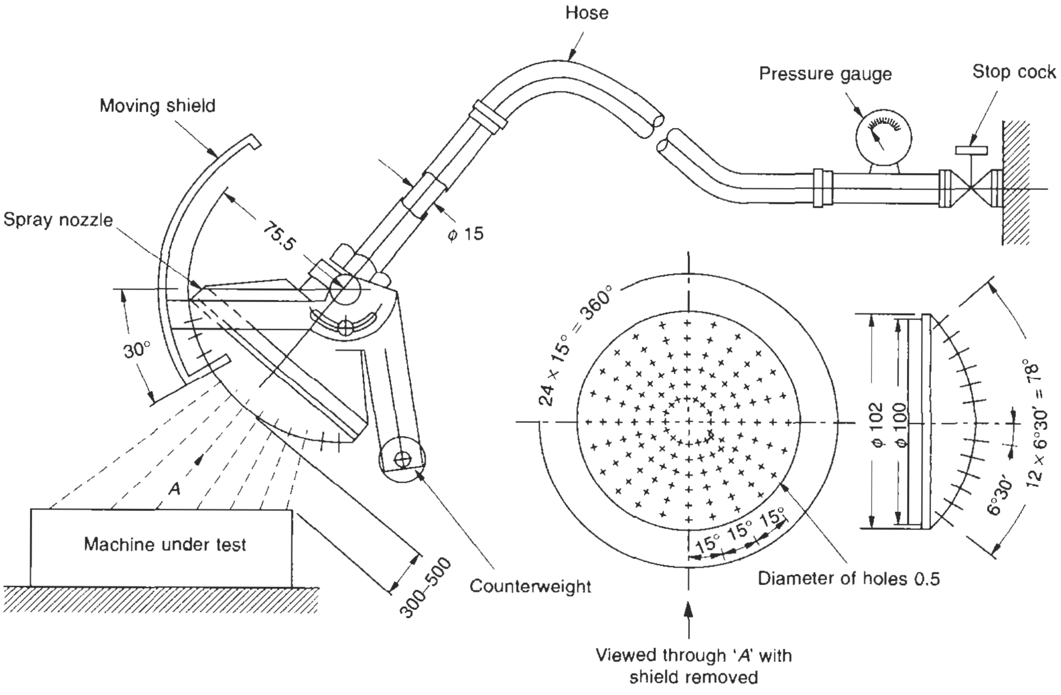

All dimensions in mm

Figure 11.10(b) Hand-held sprayer

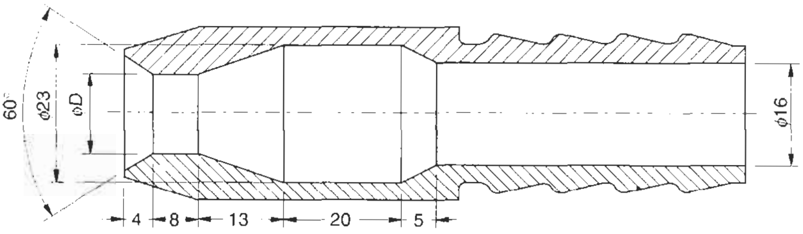

All dimensions in mm.

D = 6.3 mm for the tests of second numeral 5
D = 12.3 mm for the tests of second numeral 6

Figure 11.11 Standard test nozzle for hose tests

Table 11.9 Permissible tolerances in performance figures

S. No.	*Item*	*Tolerance*
1	Efficiency (a) By summation of losses: Motors up to 50 kW Motors above 50 kW (b) By input–output test	 -15% of $(100 - \eta)$ -10% of $(100 - \eta)$ -15% of $(100 - \eta)$
2	Total losses applicable to motors above 50 kW	+ 10% of total losses
3	Power Factor	$-1/6$ of $(1 - \cos\phi)$. Subject to a minimum of 0.02 and maximum 0.07.
4	Slip at full load and at working temperature (a) Machines having output 1 kW or more (b) Machines having output less than 1 kW	 ± 20% of the guaranteed slip ± 30% of the guaranteed slip
5	Breakaway starting current (for squirrel cage motors)	+ 20% of the guaranteed starting current (no lower limit)
6	Locked motor torque	−15% to + 25% of the guaranteed torque (+ 25% may be exceeded by agreement)
7	Pull-out torque	−10% of the guaranteed torque, except that after allowing for this tolerance, the torque will not be less than 1.6 or 1.5 times the rated torque
8	Pull-up (pull-in) torque	−15% of the guaranteed torque
9	Vibration	+10% of guaranteed classification
10	Noise level	+3 dB (A) over guaranteed value
11	Locked rotor current of squirrel cage motors with short-circuited rotor and with any specified starting apparatus	+20% of the guaranteed current (no lower limit)
12	Moment of inertia or stored energy constant, applicable to motors of frame sizes above 315	±10% of the guaranteed value

As in IEC 60034-1

Relevant Standards

IEC	*Title*	*IS*	*BS*	*ISO*
60034-1/1996	Rotating electrical machines Rating and performance Temperature rise measurement of rotating electrical machines	 12802/1989	BS EN 60034-1/1995	–
60034-2/1996	Method for determining losses and efficiency of rotating electrical machines	4029/1991	BS 4999-102/1987	
60034-5/1991	Rotating electrical machines Classification of degrees of protection provided by enclosures for rotating machinery (IP Code)	4691/1985	BS 4999-105/1988	–
60034-6/1991	Rotating electrical machines. Methods of cooling (IC Code)	6362/1995	BS EN 60034-6/1994	

IEC	*Title*	*IS*	*BS*	*ISO*
60034-9/1997	Rotating electrical machines Noise limits	12065/1987	BS EN 60034-9/1998	–
60034-12/1980	Rotating electrical machines. Starting performance of single speed three-phase cage induction motors for voltages up to and including 660 V	8789/1996	BS EN 60034-12/1996	
60034-14/1996	Rotating electrical machines Mechanical vibration of certain machines with shaft height 56 mm and higher	12075/1991	BS 4999-142/1987	2373
60034-15/1995	Rotating electrical machines Impulse voltage withstand levels of rotating a.c. machines with form wound stator coils	14222/1995	BS EN 60034-15	–
60034-17/1998	Guide for application of cage induction motors when fed from converters			
60038/1994	IEC Standard voltages			
60044-1/1996	Specification for current transformers	2705		–
	General requirements	Part-1/1992	BS 7626/1993	
	Measuring current transformers	Part-2/1992		
60044-6/1992	Protective Current Transformers	Part-3/1992		
	Protective current transformers, for special purpose applications	Part-4/1992	BS 7626/1993	
60044-2/1997	Application guide for voltage transformers	4201/1991,		
	Specification for voltage transformers	4146/1991	BS 7729/1995	
	General requirements	3156-1/1992		
60051-1 to 9	Direct acting indicating analogue electrical measuring instruments and their accessories	1248 – 1 to 9	BS 89-1 to 9	–
60060-1/1989	High voltage test techniques, for voltages higher than 1 kV General definitions and test requirements	2071-1/1993	BS 923-1/1990	–
60060-2/1994	High voltage test techniques. Measuring systems	2071-3/1991 2071-2/1991	BS EN 60060-2/1997	–
60068-2-6/1995	Environmental testing. Test Fc. Vibration (sinusoidal)	9000, 9001	BS EN 60068-2-6/1996	–
60068-2-7/1983	Test Ga. Acceleration, steady state		BS EN 60068-2-7/1993	–
60068-2-47/1982	Environmental testing. Tests. Mounting of components, equipment and other articles for dynamic tests including shock (Ea), bumb (Eb), vibration (Fc and Fd) and steady-state acceleration (Ga) and guidance		BS EN 60068-2-47/1993	–
60072-1/1991	Dimensions and output series for rotating electrical machines. Frame number 56 to 400 and Flange number 55 to 1080	1231/1991	BS 5000-10/1989 BS 4999-141/1987	–
60072-2/1990	Dimensions and output series for rotating electrical machines. Frame number 355 to 1000 and Flange number 1180 to 2360	1231/1991	BS 5000-10/1989 BS 4999-103/1987	
60072-3/1994	Dimensions and output series for rotating electrical machines. Small built in motors. Flange number BF 10 to BF 50	996/1991	BS 5000-11/1989	
60079-0/1998	Electrical apparatus for explosive gas atmospheres. General requirements	2148/1993	BS 5501-1/1977, BS 5000-17/1986	
60079-1/1990	Construction and verification test of flameproof enclosures of electrical apparatus	2148/1993	BS 4683-2/1993 BS 5501-5/1997	
60079-2/1983	Electrical apparatus. Type ‘p’.	7389/1991	BS EN 50016/1996	
60079-7/1990	Electrical apparatus for explosive gas atmospheres. Increased safety motors. General requirements	6381/1991	BS 5501-6/1977	–
60079-10/1995	Electrical apparatus for explosive gas atmospheres. Classification of hazardous areas	5572/1994	BS EN 60079-10/1996	
60079-11/1991	Specifications for intrinsically safe electrical system ‘i’	3682/1991	BS 5501-7/1977, 5501-9/1982	–
60079-12/1978	General recommendations		BS 5345-1/1989	–
60079-14/1996	Electrical apparatus for explosive gas atmospheres. Electrical installations in hazardous areas (other than mines)	5571/1991	BS EN 60079-14/1997	–
60079-15/1987	Electrical apparatus with type of protection ‘N’	9628/1988 8289/1991	BS 6941/1988 BS 5000-16/1997	
60079-17/1996	Inspection and maintenance of electrical installations in hazardous areas (other than mines)		BS EN 60079-17/1997	–

IEC	*Title*	*IS*	*BS*	*ISO*
60079-19/1993	Repair and overhaul for apparatus used in explosive atmospheres (other than mines or explosives)		BS IEC 60079-19	–
60079-20/1996	Data for flammable gases and vapours for electrical apparatus			
60186/1987	Measuring voltage transformers	3156-2/1992	BS 7729/1995	
	Protective voltage transformers	3156-3/1992	BS 7625/1993	
	Capacitor voltage transformers	3156-4/1992		
–	Rotating machines. Specifications for tests	–	BS 4999-143/1987	
--	Guide for testing insulation resistance of rotating machines, rated for 1 MW and above	7816/1991	–	
	Electrical Relays.			
60255-21-1/1988	Vibration, shock, bump and seismic tests on measuring relays and protection equipment. Vibration tests (sinusoidal)	9000	BS EN 60255-21-1/1996	
60255-21-2/1988	Shock and pump tests	–	BS EN 60255-21-2/1996	
60255-21-3/1996	Seismic tests	–	BS EN 60255-21-3/1996	
60529/1989	Degree of protection provided by enclosures (IP code)	2147/1962	BS EN 60529/1992	
60894/1987	Guide for test procedures for the measurement of loss tangent of coils and bars for machine windings	–	BS 4999-144/1987	
–	Measurement and evaluation of vibration severity *in-situ* of large rotating machines	11727/1990	BS 7854–1/1996	10816–1/1995
–	Quality management and quality assurance vocabulary	13999/1994	BS EN ISO 8402/1995	8402/1994
-	Quality system-guidelines for selection and use of standards on quality systems	14000/1988	BS EN ISO 9000.3 parts.	9000/1987
	Quality systems. Model for quality assurance in design, production and servicing etc.	14001/1994	BS EN ISO 9001/1994	9001/1994
–	Quality systems. Model for quality assurance in design, installation and servicing	14002/1994	BS EN ISO 9002/1994	9002/1994
--	Quality systems. Model for quality assurance in final inspection test	14003/1994	BS EN ISO 9003/1994	9003/1994
–	Guidelines on quality management and quality system elements	14004/1991	BS EN ISO 9004/1994–1/1994	9004/1987
–	Test code for the measurement of airborne noise emitted by rotating electrical machines	–		
	Engineering method for free field conditions over a reflecting plane		BS 7458-1/1991	1680-1/1986
	Survey method		BS 7458-2/1991	1680-2/1986
	Determination of sound power levels of noise sources		BS 4196	3740

Relevant US Standards ANSI/NEMA and IEEE

ANSI/IEEE-118/1992	Test code for resistance measurement.
ANSI/IEEE: 112/1992	Test procedures for poly-phase induction motors.
ANSI/IEEE-43/1992	Recommended practice for. testing insulation resistance of rotating machinery.
ANSI/IEEE-117/1992	Test procedure for. evaluation of system of insulating materials for random wound a.c. electrical machines.
IEEE-1107/1996	Recommended practices for thermal evaluation of sealed insulating systems for a.c. electrical machinery employing random wound stator coils.
IEEE-429/1994	Recommended practice for Thermal evaluation of sealed insulation systems for a.c. electrical machinery employing form wound pre-insulated stator coils for machines rated 6.9 kV and below.
ANSI/IEEE-522/1998	Guide for testing turn to turn insulation on form wound stator coils for a.c. rotating machines.
IEEE-792/1995	Recommended practice for the evaluation of the impulse voltage capability of insulation systems for a.c. electrical machinery employing form wound stator coils.
IEEE 4/1995	Standard techniques for HV testing.
ANSI/IEEE 433/1991	Practice for insulation testing. Large a.c. rotating machines with high voltage at very low frequency.
ANSI/IEEE 434/1992	Guide for functional evaluation of insulation system for large HT machines.
ANSI/IEEE-275/1998	Recommended practice for, thermal evaluation of insulation systems for a.c. electrical machinery employing form wound pre-insulated stator coils, for machines rated 6.9 kV and below.
NEMA-MG 1/1993	Motors and generators rating, construction, testing and performance.
NEMA-MG 3/1990	Sound level prediction for installed rotating electrical machines.

Notes

1 In the tables of relevant Standards in this book while the latest editions of the standards are provided, it is possible that revised editions have become available. With the advances of technology and/or its application, the updating of standards is a continuous process by different standards organizations. It is therefore advisable that for more authentic references, readers should consult the relevant organizations for the latest version of a standard.

2 Some of the BS or IS standards mentioned against IEC may not be identical.

3 The year noted against each standard may also refer to the year of its last amendment and not necessarily the year of publication.

Further reading

1. Bartheld R.G., *Motor Noise.*
2. DOC-ETDC 15(3059), *Recommendation on insulation resistance test for 3.3 kV motors, 1000 kW and above*, June (1987).
3. Essler, H. and Mohan T.R., 'Noise in electrical machines,' *Siemens Circuit*, **IV** No. 3, April (1969).
4. Hogg, W.K., Miller, R., Rabech, G. and Ryder, D.M., 'The relationship of partial discharge amplitude distribution with electric damage at different levels of voltage and frequency', *IEEE Symposium on Electrical Insulation*, USA, June (1984).
5. IEEE, *Results of an investigation on the over voltages due to a vacuum circuit breaker when switching an H.V. motor*, IEEE 85 SM 370-2(1985).
6. ISI DOC ETDC 15 (2729), Indian standard Institute Draft Documents for Electro Technical Division Council, for limits of vibration.
7. Renganian, S., Agrawal, MD. and Nema, R.S. 'Behaviour of high voltage machine insulation system in the presence of thermal insulation and electrical stresses', *IEEE Trans. on EI* **EI 20**, No. 1, Feb. (1985).
8. Rhudy, R.G. et al., 'Impulse voltage strength of AC rotating machines' *IEEE Trans. PAS*, 100, No. 8(1981).
9. Secco, M., Bressani, M. and Razza, F., *Medium Motor and Generator Plant*, Ansaldo Componenti SPA, Italy. Progress and development trends in large induction motor stator winding insulation.
10. Simons, J.S., 'Diagnosis of H.V. machine insulation', *IEEE Proceedings*, **127**, May (1980).

12

Protection of Electric Motors

Contents

12.1 Purpose

An electric motor must be adequately protected against all unfavourable operating conditions and internal or external faults. We have classified these conditions into three categories to identify the most suitable protection:

1 Unfavourable operating conditions
2 Fault conditions
3 System disturbances and switching surges (for HT motors)

12.2 Unfavourable operating conditions

Operating conditions that may overload a machine and raise its temperature beyond permissible limits may be called unfavourable. This overheating, however, will be gradual (exponential), unlike rapid (adiabatic) heating as caused during a locked rotor condition. The machine now follows its own thermal curve and therefore a conventional thermal protection device can be used to protect it from such conditions. These conditions may arise due to one or more of the following:

(i) *Overloading* Due to excessive mechanical loading.

(ii) *Undervoltage* Low voltage results in forced overloading due to higher slip losses and higher current input to sustain the same load requirement. An unstable sub-distribution network, a number of small LT loads on a long and already overloaded LT distribution system, or inadequate cable sizes may cause an excessive fall in the receiving end voltage. See also Section 23.3, where we analyse the effect of low power factor on the terminal voltage.

The effect of small voltage drops (Section 1.6.2) is taken care of by the standard overcurrent protection used in the motor's switching circuit. But for installations where the voltage available at the motor terminals may fall below the permissible level, say, below 90% of the rated voltage, overheating or even stalling may occur if the voltage falls below 85%. In such a condition, depending upon the severity of the voltage fluctuation and the load requirement, a separate undervoltage relay may also be used.

The 'no-volt' coil of the contactor or the undervoltage trip coil of the breaker, used for the motor switchings, are designed to pick up at 85% of the rated voltage. These coils drop out at a voltage between 35% and 65% of the rated voltage and would not protect the motor against undervoltages. In normal service con-ditions the system voltage is not likely to fall to such a low level, particularly during running.

Thus, the protection will not prevent the closing of the contactor or the breaker when the supply voltage is *85% or more, nor will it trip the motor until the voltage falls to a low of *65% of the rated voltage. In both cases, therefore, separate undervoltage protection will be essential. This problem, however, is a theoretical one, as an industrial power system would seldom fluctuate so widely.

Note Sometimes when there are perennial wide voltage fluctuations at certain locations/installations the manufacturers of the contactors on demand from users may design their holding coils for even lower pick up and higher drop out voltages than noted to save the feeders from unwanted trips, the user making extra capacity provision in the motor or getting it redesigned for special voltages to sustain the wide voltage fluctuations.

(iii) *Reverse rotation* This may occur due to a wrong phase sequence. While the motors are suitable for either direction of rotation, the load may be suitable for one direction only and hence the necessity for this protection. A reverse rotation means a reverse rotating field and is prevented by a negative phase sequence, i.e. a voltage unbalance or single-phasing protection. Moreover, this protection is also of little significance, as once the motor is commissioned with the required direction of rotation, it is rare that the sequence of the power supply would reverse.

(iv) *Protection from harmonic effects* Motors are influenced less with the presence of harmonics. This is due to the benign effects of harmonics on inductive loads, on the one hand, and the motor providing no path to the third harmonic quantities on the other, as it is normally connected in delta. In HT motors, however, which are normally star connected, the neutral may be left floating to provide no path to the third harmonics.

Higher harmonics increase the harmonic reactance and have a dampening effect (Section 23.5.2(B)). A motor circuit, LT or HT, possesses a high inductive impedance due to interconnecting cables and its own inductance, and provides a self-dampening effect to the system's harmonics. There is thus no need, generally, to provide protection against harmonics specifically, except for high no-load iron losses.

If, however, high contents of harmonics exist, as when the machine is being fed through a static power inverter (Section 6.13), they will produce magnetic fields, rotating in space, proportional to the individual harmonic frequencies. These fields may be clockwise or anti-clockwise, depending upon whether the harmonic is positive or negative. The fields produce different torques, which may also be clockwise or anti-clockwise. The net effect of all this is a pulsating torque. In a six-pulse thyristor circuit, for instance, the harmonic disorder is –5, +7, –11, +13, –17 and +19 etc. giving rise to clockwise and anti-clockwise fields.

To reduce the no-load iron losses caused by such harmonics the machine core may be formed of thinner low-loss laminates (see also Section 1.6.2(A-iv)). When the machine has already been manufactured and there is a need to suppress these harmonics, filter circuits may be employed along the lines discussed in Section 23.9.

Excessive harmonics may also make the protective devices behave erratically or render them inoperative. Filter circuits would suppress the harmonics and eliminate these effects.

Note The protective devices which measure r.m.s. values of current also detect the harmonic contents and provide automatic protection for the machine against harmonic disorders. But in installations that contain high harmonics and that may influence the performance of machines operating on such a system, it is advisable to suppress the harmonics rather than allow a machine to trip at higher harmonics. Drives generating high harmonics, such as static drives, are provided with harmonic suppressors as normal practice.

(v) *Voltage unbalance (negative phase sequence)* This causes negative sequence components and results in excessive heating of the motor windings. An unbalanced voltage may occur due to unevenly distributed single-phase loads.

A voltage unbalance may also be due to unequal phase impedances of the feeding HT line and may be a result of unequal spacing between the horizontal and vertical formation of conductors or asymmetrical conductor spacings. These effects cause an unequal induced magnetic field and hence an unequal impedance of each conductor. The implication of such a system can be studied by assuming it to be composed of two balanced systems (Figure 20.1), one positive and the other negative (the negative system having the reverse rotating field and tending to rotate the rotor in the reverse direction). Each field produces a balanced current system, the phasor sum of which will decide the actual current the motor windings will draw. The main effect of a negative sequence current is thus to increase iron losses and reduce the output of the motor. In such a condition, as the current drawn by the motor increases, the torque and the power developed reduce, and the motor operates at a higher slip. All these losses appear in the rotor circuit as slip losses. The rotor operates at a higher slip and becomes relatively more heated than the stator and more vulnerable to damage.

According to IEC 60034-1, a negative sequence component up to 1% of the positive sequence component of the system voltage, over a long period or 1.5% for a short period, not exceeding a few minutes, and with the voltage of the zero sequence component not exceeding 1%, may be considered a balanced system.

A motor is able to sustain a negative sequence voltage up to 2% for short durations, while a sustained unbalance may deteriorate its insulation and affect its life. For higher unbalances, a derating of the motor output must be applied according to IEC 60892 or to Figure 12.1.

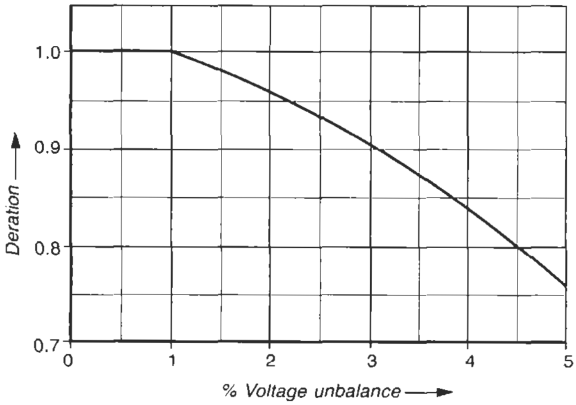

Figure 12.1 Derating in motor output due to voltage unbalance

A voltage unbalance may affect motor performance in the following ways:

- It would cause overheating and the effective output may have to be reduced to avoid this. See Figure 12.1.
- It would reduce T_{st}, T_{po} and T_r etc. by $\propto V_u^2$ (V_u = unbalanced voltage). An unbalance up to 1% will not affect motor performance below the permissible limits. See also MG-1-14.34 and Figure 12.2. The effect of unbalance on torque may, however, be considered insignificant. For example, even at an unbalance of 5%, the negative torque will be = $(0.05)^2 \times T_r$ or 0.25% of T_r, which is insignificant.
- Due to smaller output and torque, the slip would rise and add to the rotor's losses (mainly iron losses) (see Figure 12.3). The voltage unbalance can be calculated as follows:

Voltage unbalance

$$= \frac{\text{Max. voltage variation from the average voltage}}{\text{Average voltage}} \times 100\% \qquad (12.1)$$

Note The negative sequence voltage is caused by an unbalance in the magnitude of voltages in the three phases, rather than in the phase angle.

Example 12.1

Consider three line voltages 390 V, 400 V and 416 V. Then

$$\text{the average voltage} = \frac{390 + 400 + 416}{3}$$

$$= 402 \text{ V}$$

and the maximum variation from the average voltage

$$= 416 - 402, \text{ i.e. } 14 \text{ V}$$

$$\therefore \quad \text{unbalance} = \frac{14}{402} \times 100 = 3.48\%$$

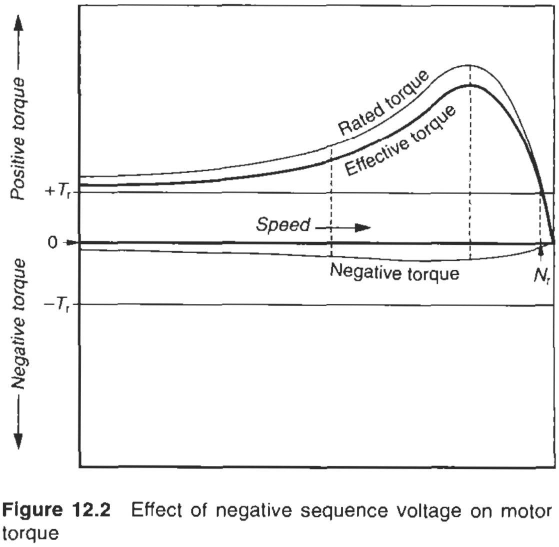

Figure 12.2 Effect of negative sequence voltage on motor torque

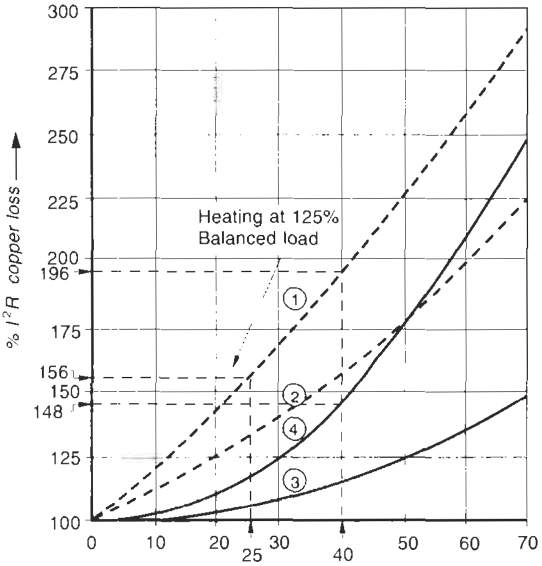

① Maximum hot – phase heating (positive and negative sequence currents in phase).

② Minimum hot – phase heating.

③ Average stator heating per phase.

④ Rotor heating.

Figure 12.3 Heating effect caused by an unbalanced voltage system

Note A supply system having a voltage unbalance of more than 5% is not recommended for an industrial application, which may have a number of electric motors connected on it. Rural distribution, however, is an exception due to excessive LT loads on the same network (Section 7.6), but such loads are mostly individual and not of the industrial type.

• *Stator currents*

The machine offers very low impedance to negative sequence voltages. As a result, the percentage increase in the stator current is almost the same as the starting current on DOL switching, i.e. six to ten times the rated current.

To understand this, consider the equivalent motor circuit diagram of Figure 1.15 with a normal positive sequence voltage V_r. The unbalanced voltage V_u will produce a negative phase sequence and rotate the magnetizing field in the opposite direction at almost twice the supply frequency. The frequency of the negative phase sequence voltage and current in the rotor circuit will thus become $(2 - S) \times f$ and the slip $(2 - S)$. In such a condition, the equivalent motor circuit diagram (Figure 12.4(a)) will assume the impedance parameters, as shown in Figure 12.4(b). Thus

$$I_r = \frac{V_r}{\sqrt{\left[R_1 + R_2' + \dfrac{(1 - S)}{S} \times R_2'\right]^2 + [X_1 + S \times ssX_2']^2}} \tag{12.2}$$

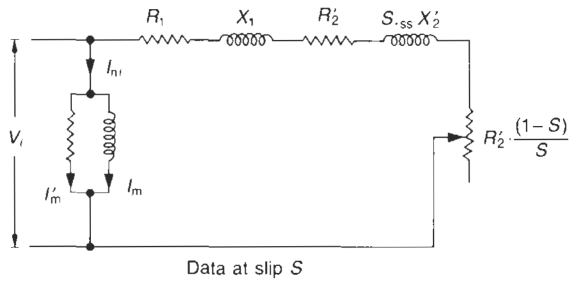

Figure 12.4(a) Equivalent circuit diagram with a balanced supply voltage (at slip S)

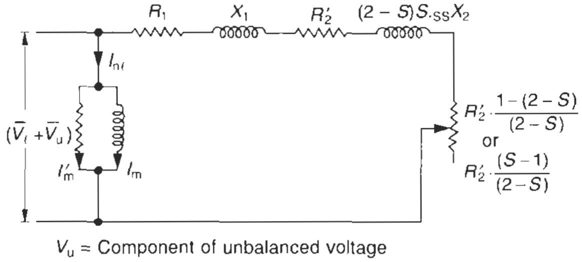

Figure 12.4(b) Equivalent circuit diagram with an unbalanced supply voltage (at slip = 2 – S)

and

$$I_u = \frac{V_u}{\sqrt{\left[R_1 + R_2' + \dfrac{(S - 1)}{(2 - S)} \times R_2'\right]^2 + [X_1 + (2 - S) \times ssX_2']^2}} \tag{12.3}$$

I_u = negative phase sequence current component.

(a) If the current during start (when $S = 1$) = I_{st}
Then I_{st} in the former case,

$$I_{st} = \frac{V_r}{\sqrt{(R_1 + R_2')^2 + (X_1 + ssX_2')^2}}$$

Since $(X_1 + ssX_2') >> (R_1 + R_2')$

$$\therefore\ I_{st} \simeq \frac{V_r}{(X_1 + ssX_2')}$$

(b) Now consider the current I_u during normal running speed, i.e. when $s \simeq 0$. Then in the latter case,

$$I_u \simeq \frac{V_u}{\sqrt{[R_1 + R_2' - R_2'/2]^2 + (X_1 + 2\,ssX_2')^2}}$$

Applying the same rule of approximation as above,

since $(X_1 + 2ssX_2') >> (R_1 + R_2'/2)$

$$\therefore\ I_u \simeq \frac{V_u}{(X_1 + 2\,ssX_2')}$$

and this relationship produces almost the same amount of current as during a start.

Corollary

Impedance of a motor during a normal running condition to a negative phase sequence voltage will be almost the same as that of the impedance of a motor during a start, in a balanced supply system. Thus, the current effect during normal running of a negative sequence voltage will be the same as that of the starting current effect on a balanced supply system.

The effect of voltage unbalance is, therefore, more pronounced than the percentage of unbalance itself. For instance, a voltage unbalance of 3% may cause a current unbalance of 18–30%, which is detrimental to the life of the motor. The effective current in the stator windings would depend upon the relative positions of the positive and the negative sequence components. In one of the windings they may be in phase, producing the maximum current and the associated heating effect, and in the other two they may be 120° apart. In Figure 12.5 we have drawn the maximum and the minimum effective currents which the stator windings may experience on an unbalanced supply system.

• *Stator maximum heat*

This occurs when the positive and negative sequence components fall in phase in which case the equivalent stator current will become

$$I_{cq}\,(\text{max.}) = \bar{I}_r + \bar{I}_u$$

and the maximum heat generated, $H_{eq}(\text{max.}) \propto (I_r + I_u)^2$ (Figure 12.3, curve 1)

$$\text{or} \quad H_{eq}(\text{max.}) \propto (I_r^2 + I_u^2 + 2I_r \times I_u) \qquad (12.4)$$

Example 12.2
Consider a negative sequence component of 40% of the rated current. Then the maximum heat generated as in equation (12.4)

H_{eq} (max.) $\propto$ (1^2 + 0.4^2 + 2 × 1 × 0.4)

or $\propto$ (1 + 0.16 + 0.8)

i.e. 1.96 or 196%

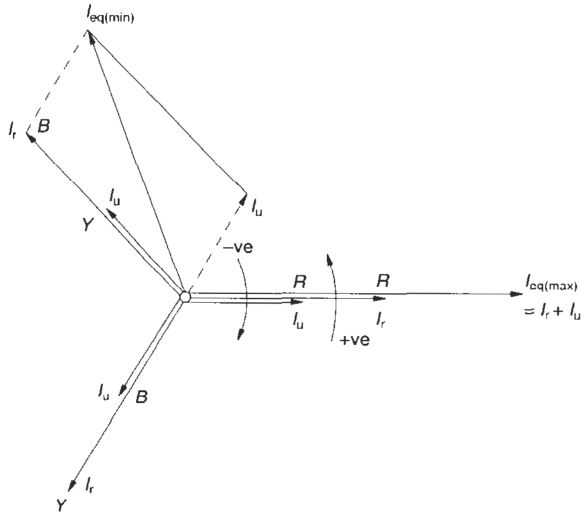

Figure 12.5 Equivalent stator currents during unbalanced voltage

• *Stator minimum heat*

This occurs in the other two windings, which are 120° phase apart (Figure 12.5). Hence

$$I_{cq}(\text{min.}) = \sqrt{I_r^2 + I_u^2 + 2I_r \times I_u \cos 60°}$$

$$= \sqrt{I_r^2 + I_u^2 + I_r \times I_u}$$

and the minimum heat generated,

$$H_{eq}(\text{min.}) \propto (I_r^2 + I_u^2 + I_r \times I_u)$$

(Figure 12.3, curve 2) (12.5)

Example 12.3
The minimum heat generated in the above case

H_{eq} (min.) $\propto$ (1^2 + 0.4^2 + 1 × 0.4)

or $\propto$ (1 + 0.16 + 0.4)

i.e. 1.56 or 156%

• *Stator average heat*

In practice the temperature attained by the stator windings will be significantly below the maximum or even the minimum heats as determined above due to the heat sink effect. The heat will flow from the hotter phase to the cooler phases/area (see curve 3 of Figure 12.3). But for protection of the motor windings against negative sequence components, the average heat curve is of no relevance, for it will take a considerable time for the heat to stabilize at this curve, and much more than the thermal withstand capacity of the winding most affected.

It is therefore essential to provide adequate protection for the motor to disconnect it from the mains quickly before any damage is caused to the most affected winding. The protection is based on the maximum heat that may be generated in the motor windings in the event of a negative sequence component in the system.

• *Magnitudes of negative sequence components for protection*

The additional heat generated by a negative sequence component may vary from six to ten times the theoretical heat produced by that amount of a positive sequence component, as analysed above. It is therefore more relevant to consider a factor of 6 to represent the effect of such a component. The heat generated can be rewritten as

$$H_{eq} \propto (I_r^2 + 6I_u^2) \qquad (12.6)$$

and the current on unbalance,

$$I_{cq} \propto \sqrt{(I_r^2 + 6I_u^2)} \qquad (12.7)$$

The factor 6 is a design parameter for all future reference. In fact, this empirical factor has been established over many years of experience and field data collected on the behaviour and performance of a motor in such an unfavourable operating condition.

The heat derived from this equation may be less than the minimum heat (equation (12.5)) or even more than the maximum heat (equation (12.4)) depending upon the severity and the phase disposition of the negative component with reference to the positive component. This can be illustrated by the following examples.

Example 12.4
Referring to Examples 12.2 and 12.3 above, the heat produced according to the empirical formula is as follows:

$H_{eq} \propto (1^2 + 6 \times 0.4^2)$

i.e. 1.96 or 196%

which is the same as that derived in Example 12.2.

Corollary

One can thus easily obtain the significance of the factor 6 to represent the status of the most affected winding of the motor in the event of a voltage unbalance resulting in a negative sequence current component. For more clarity, consider equations (12.4) and (12.6) to ascertain the similarity in both these equations. Since both must represent the maximum heating effect

$$\therefore \; I_r^2 + 6I_u^2 = I_r^2 + I_u^2 + 2 \cdot I_r \times I_u$$

or $\quad 5I_u^2 = 2I_r \times I_u$

or $\quad I_u = 2/5 \times I_r$, i.e. 0.4 I_r

Thus these two methods will yield the same result for a negative sequence component of 40%. If the negative sequence current I_u is lower than 40%, the heat produced from equation (12.6) will be lower than the minimum heat obtained from equation (12.5). In contrast, for a negative sequence component of more than 40%, the situation is likely to be reversed, since the heat produced as in equation (12.6) will be higher than the maximum heat produced by equation (12.4). See the following example for more clarity.

Example 12.5
Consider a negative sequence component of 15% and 50% respectively.

(a) For a 15% negative sequence component:

From equation (12.5)

$H_{eq}(\text{min.}) \propto (1^2 + 0.15^2 + 1 \times 0.15)$

i.e. 1.1725 or 117.25%

and from equation (12.6)

$H_{eq} \propto (1^2 + 6 \times 0.15^2)$

i.e. 1.135 or 113.5%

which is even less than the minimum heat obtained from equation (12.5).

(b) For a 50% negative sequence component:

From equation (12.4)

$H_{eq}(\text{max.}) \propto (1^2 + 0.50^2 + 2 \times 1 \times 0.5)$

i.e. 2.25 or 225%

and from equation (12.6)

$H_{eq} \propto (1^2 + 6 \times 0.5^2)$

i.e. 2.5 or 250%

which is even more than the maximum heat obtained from equation (12.4). Equation (12.6) is thus more appropriate for a protective device and reflects the effect of a negative sequence component in a motor winding more precisely.

- ***Rotor power***

The negative sequence voltage sets up a reverse rotating field and the slip of the rotor becomes '2 – *S*', compared to the positive sequence slip *S*. The motor will thus operate under the cumulative influence of these two slips, where power output *P* can be expressed by (see also Section 2.3).

$$P = 3\left(I_{rr}^2 \times R_2 \times \frac{(1-S)}{S} - I_{ru}^2 \times R_2 \times \frac{(1-S)}{(2-S)} \right) \quad (12.8)$$

where
I_{rr} = positive sequence current in the rotor circuit, and
I_{ru} = negative sequence current in the rotor circuit

- ***Rotor heat***

The unbalanced voltage will produce an additional rotor current at nearly twice the supply frequency. For example, for a 2% slip, i.e. a slip of 1 Hz, the negative sequence stator current, due to an unbalanced supply voltage, will induce a rotor current at a frequency of $(2f - 1) = 99$ Hz for a 50 Hz system. These high-frequency currents will produce significant skin effects in the rotor bars and cause high eddy current and hysteresis losses (Section 1.6.2(A-iv)). Total rotor heat may be represented by

$$\propto (I_{rr}^2 + 3I_{ru}^2) \quad (12.9)$$

(refer to curve 4 of Figure 12.3) and cumulative rotor current

$$I_{rr\,total} = \sqrt{(I_{rr}^2 + 3I_{ru}^2)} \quad (12.10)$$

Example 12.6
For example 12.2, the rotor heat at 40% stator negative sequence current

$\propto (1^2 + 3 \times 0.4^2)$

i.e. 1.48 or 148%

Refer to curve 4 of Figure 12.3.

12.3 Fault conditions

These are conditions in which overheating of the machine may not trace back to its own thermal curves as in the first case. The temperature rise may now be adiabatic (linear) and not exponential and hence rapid. Now a normal thermal protection device may not be able to respond as in the previous case. Some conditions causing overheating may not recessarily be fault conditions. Nevertheless, they may require fast tripping, and hence are classified in this category for more clarity. Such conditions may be one or more of the following:

1 A fault condition, such as a short-circuit between phases.
2 A ground fault condition.
3 A prolonged starting time.
4 A stalling or locked rotor condition: An undervoltage, an excessive load torque or a mechanical jamming of the driven equipment may cause this. It may lock the rotor during a start, due to an inadequate starting torque. Such a situation is known as stalling and results in a near-locked rotor condition (see Figure 12.6). At reduced voltage start the motor will stall at speed N_a and will not pick up beyond this. If the motor was already running and the motor torque takes the shape of curve *B* due to a voltage fluctuation, the motor may not stall but may operate at a higher slip S_2. Although, this is not a stalling condition it may cause severe overloading. At high slips, the current I_r traces back the starting current curve as on DOL as illustrated, and may assume a very high value.
In certain cases, for example in large motors where T_{po} is normally not very high, during a severe drop in voltage T_{po} may fall to a value less than the load requirement and result in a stalling or even a locked rotor condition (see Figure 12.7).
5 Frequent starts: It is not a fault condition, but rapid heating of motor's stator and rotor due to frequent starts will be no less severe than a fault condition, hence considered in this category.
6 Protection against single phasing.

In all these conditions protection against 2, 3, 4 and 5 is generally applicable to large LT motors, say 100 h.p. and above, and all HT motors. This protection is normally provided by a single-device motor protection relay, discussed in Section 12.5.

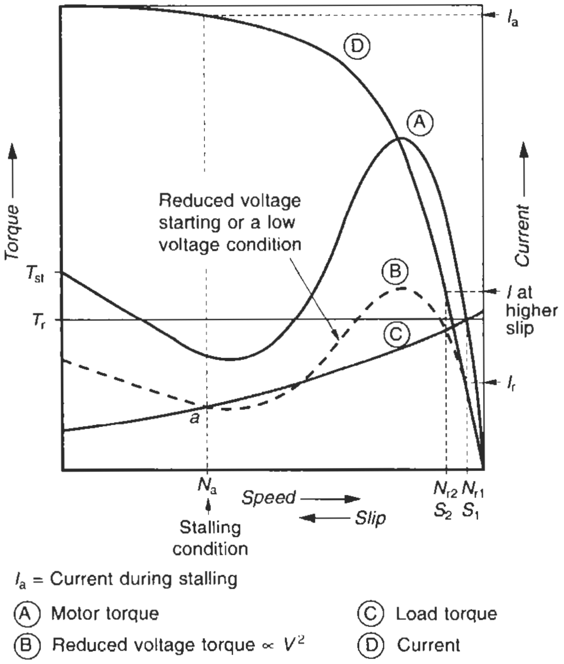

Figure 12.6 Stalling condition during start and run

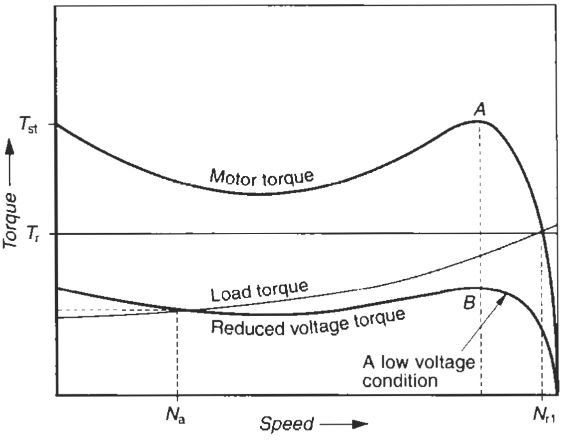

Figure 12.7 Stalling condition during run

Single phasing

This is a condition of a severe unbalance. Until the 1970s this had been the most frequent cause of motor failure during operation. About 80% of installed small and medium-sized motors, say, up to 100 h.p. experienced burning due to single phasing because of the absence of adequate single-phasing protection. With the introduction of single-phasing protection in the 1970s, as a built-in feature with thermal overcurrent relays (OCRs), this cause of motor failure has significantly diminished in all the later installations.

The following are the possible causes of single phasing:

- Immobilization of one of the phases during operation by the melting of a faulty joint such as poor cable termination
- Blowing of one of the fuses during a start or a run
- Defective contacts or
- A cable fault, immobilizing one of the phases.

Effects of single phasing

1 The T_{po} of an induction motor, say, up to 100 h.p., is normally more than 150–200% of T_r. Therefore when the motor is operating at only one half to two thirds of T_r and experiences single phasing during the run, it may still be running without stalling, although at a higher slip. It will now be subject to a rapid burnout without adequate protection. The motor will now draw much higher currents in the healthy phases, to supplement the lost phase, as well as to compensate for the higher slip losses. It may even stall if it was operating at more than 70% of T_r at the time of single phasing.
2 If the motor is switched on, in a single phasing condition, it will not rotate in the absence of a rotating field, similar to a single-phase motor without a start winding.
3 If the motor stalls during pick-up, it will come to a standstill as a result of a locked rotor. The motor will

now be vulnerable to rapid burnout as the heat will be localized and rapid in one part of the rotor and may damage it without appreciably raising its overall temperature.

4 Since single phasing is a condition of severe unbalance, it causes varying proportions of dangerous currents in the motor windings, as discussed below.

Heat generated in a star-connected stator winding

In the event of single phasing, in star-connected windings, one of the phases of each positive and negative sequence components will counter-balance each other, to produce zero current in the open phase (Figure 12.8(a)). The magnitude of these components in the two healthy phases are equal, i.e. $I_r = I_u$, and the maximum heat of the stator as in equation (12.4)

$$\propto (I_r^2 + I_r^2 + 2 \times I_r \times I_r)$$

i.e $\propto 4I_r^2$

and the maximum current $I_{eq\ (max.)} = 2I_r$

The minimum heat as in equation (12.5)

$$\propto (I_r^2 + I_r^2 + I_r \times I_r)$$

i.e $\propto 3I_r^2$

and the minimum current $I_{eq\ (min.)} = \sqrt{3}\, I_r$. See Figure 12.8(b).

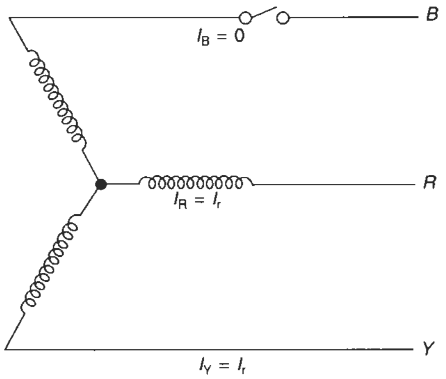

(a) Winding diagram

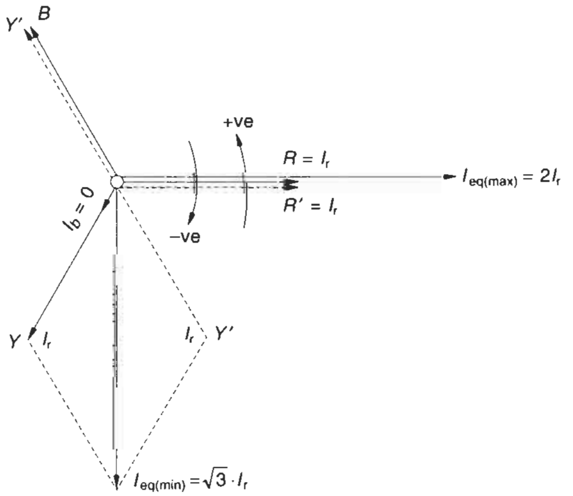

(b) Phasor diagram

Figure 12.8 Stator and line currents on single phasing for a star-connected winding

Heat generated in a delta-connected stator winding

In delta-connected windings we cannot derive the phase currents during single phasing by the above simple hypotheses. Now two of the phase windings are connected in series, while the third forms the other path of the parallel circuit, as illustrated in Figure 12.9. The currents in the immobilized phase as well as the healthy supply lines now vary disproportionately with load, the increase in the lone winding being more pronounced. A general idea of the magnitude of phase and line currents so produced is given in the curves in Figure 12.10 by measuring these currents by creating a single-phasing condition.

Heat generated in the rotor

Referring to equation (12.9) the rotor heat can be expressed by

$$\propto (I_{rr}^2 + 3I_{ru}^2)$$

In single phasing, $I_{ru} = I_{rr}$, the rotor heat will be

$$\propto (I_{rr}^2 + 3I_{rr}^2)$$

or $\propto 4I_{rr}^2$

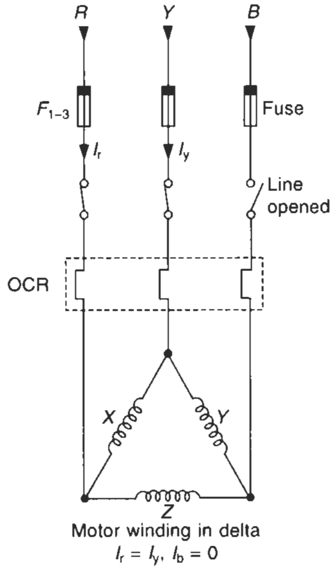

Figure 12.9 Stator and line currents on single phasing for a delta-connected winding

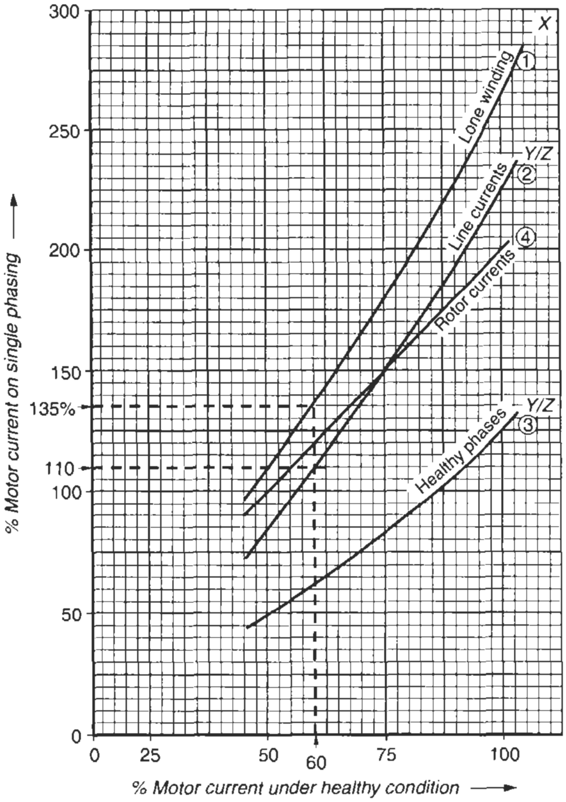

Figure 12.10 Current magnitudes in different phases of a delta-connected stator winding and rotor during single phasing

i.e. four times the normal heat of the rotor, and the rotor current = $2I_{rr}$

If single phasing occurs at 50% of the full load, the rotor current will be 100%. See curve 4 of Figure 12.10.

Conclusion

1 *Star-connected stators*

(a) The theoretical heats of the motor as derived earlier for star-connected stators and rotors are almost the same. But even if single phasing does not lead to a stalled or a locked rotor condition, it may cause the motor to operate at a much higher slip due to a lower torque, T_r. The rotor is therefore subjected to a faster temperature rise compared to the stator due to excessive eddy current losses and its smaller volume compared to that of the stator. In single phasing, therefore, although the stator and rotor current curves may appear similar, their relative heats will be substantially different. The rotor in such motors is thus more critical and must be protected specifically.

(b) Three-phase LT motors are built in delta connection except for very small sizes, say, up to 1 or 2 h.p., but all HT motors are generally wound in star connection (see also Section 4.2.1). Generally, in LT motors the stator and in HT motors the rotor are more vulnerable to a fast burnout in the event of single phasing.

2 *Delta-connected stators*

(a) In delta-connected windings, the lone winding X, (Figure 12.9) for motor loads 50% and above carries a current higher than the rated full load current and also higher than that of the rotor, and becomes more vulnerable to damage compared to the rotor. This difference is more significant at loads closer to the rated load (Figure 12.10).

(b) A study of Figure 12.10 will suggest that in the event of single phasing, protection should be such that it traverses the replica of the heating curve of phase X .

(c) It also suggests that the heat generated in the rotor circuit, due to voltage unbalance or single phasing, is less than the maximum stator heat. The factor of 6 considered in equation (12.6) is adequate to take account of it.

(d) For loads of less than 50% of the rated motor current, this protection is not required as the current in phase X will not exceed 100% of the full load current during a single phasing.

Corollary

Since an inter-turn fault also causes unbalance, it is protected automatically when a negative sequence protection is provided depending upon its sensitivity and the setting.

3 *Rotor circuit*

(a) In a rotor circuit the rotor current and the heating effects, due to single phasing, remain the same for both star- or delta-connected stators due to the same $(2f - S) \simeq 100$ Hz rotor currents on a 50 Hz system.

(b) A stator thermal withstand curve cannot be considered a true reflection of the rotor thermal conditions. In a delta-connected motor (mostly LT motors), the stator would heat-up more rapidly than the rotor, and normally protection of the stator may also be regarded as protection for the rotor. But This is not so in the following cases:

- Prolonged starting time
- Stalling or a locked rotor condition
- Frequent starts, and
- All HT motors wound in star.

In all the above conditions, the rotor would heat-up much more rapidly than the stator due to its low thermal time constant (τ), and its smaller volume compared to that of the stator, on the one hand, and high-frequency eddy current losses at high slips, due to the skin effect, on the other. True motor protection will therefore require separate protection of the rotor. Since it is not possible to monitor the rotor's temperature, its protection is provided through the stator only. Separate protection is therefore recommended through the stator against these conditions for large LT and all HT motors.

Note

1 It is for this reason that rotors, as standard practice, are designed to withstand a much higher temperature of the order of 400–450°C in LT motors and 300–350°C in HT motors, compared to a too-low temperature of the stator. This temperature is such that for almost all motor operating conditions meticulous protection of the stator would also protect the rotor. It is also observed that rotor failures are therefore rare compared to stator failures.
2 Nevertheless, whenever the rotor is more critical, despite a higher rotor operating temperature, rotor thermal curves are provided by the manufacturer for facilitating protection for the rotor also through the stator.
3 The rotor design, its cooling system or the motor size itself may have to be changed substantially for motors to be installed in fire hazard environments to limit their temperature rise in adverse operating conditions within safe limits (Table 7.6).

12.4 Protection

12.4.1 Protection against unfavourable operating conditions

Protective devices and their selection

We will now discuss protective devices, and their selection, that will be essential to safeguard a motor against all unfavourable operating and fault conditions. A machine may be provided with a modest or elaborate protective scheme, depending upon its size, application and voltage rating. This enables savings on cost, where possible, and provides a more elaborate protection where more safety is necessary. Accordingly we have sub-divided the protection as follows:

1 Protection of small and medium-sized LT motors, up to 300 h.p.
2 Protection of large LT motors, say, 300 h.p. and above. This is to be decided by the user, based on the load requirement and critical nature of the drive
3 Protection of HT motors

Small and medium-sized LT motors

Protection against overloading

This can be achieved by an overcurrent relay. The basic requirement of this relay is its selectivity and ability to discriminate between normal and abnormal operating conditions. Three types of such relays are in use: thermal, electromagnetic and static. Thermal relays are employed for motors of up to medium size and electromagnetic and static relays for large LT and all HT motors, as discussed in Section 12.5.

The thermal relays in general use are of two types, i.e.

- Bimetallic, and
- Fusible alloy or eutectic alloy

Because of their spread between hot and cold characteristics, these relays allow a tripping time of less than the starting time when a hot motor stalls, so a separate stalling protection is normally not necessary. They detect the r.m.s. value of the current and thus account for the effects of harmonics, present in the current, drawn by the motor. They also take into account the heating, due to previous running of the motor as they are also heated along with the motor. This feature is known as thermal memory. These relays thus possess tripping characteristics almost matching the thermal withstand capacity of the motor.

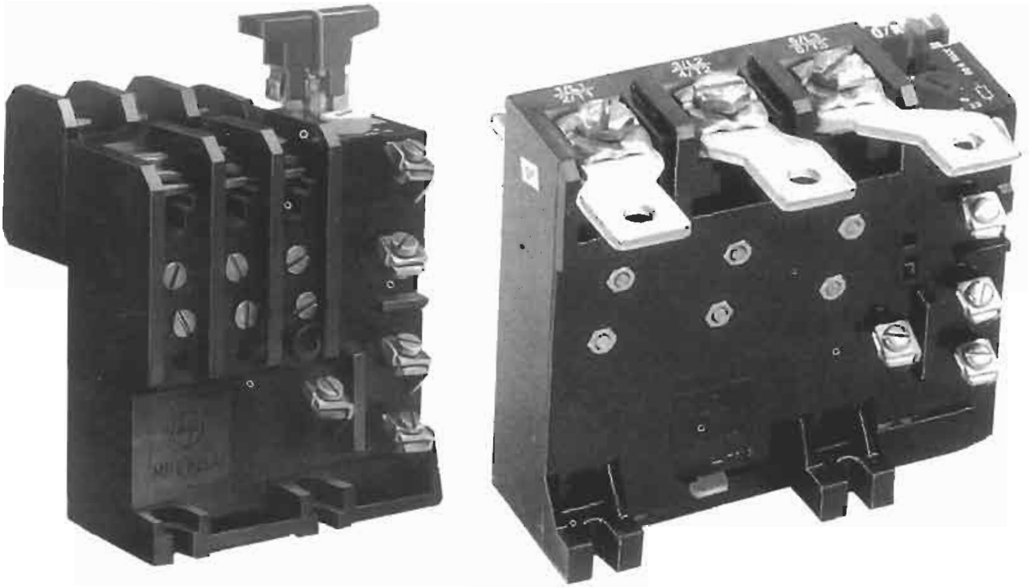

Figure 12.11 Thermal overcurrent relay (Courtesy: L&T)

Bi-metallic thermal relays (Figure 12.11)*

These have three heaters in series with the circuit. One or more bi-metallic strips are mounted above these heaters, which act as latches for the tripping mechanism or to give an alarm signal if desired. The heaters may be heated directly for small motors or through current transformers (CTs) for medium-sized motors. Bending of the bimetallic strips by heating, pushes a common trip bar in the direction of tripping to actuate a micro-switch to trip the relay or contactor. The rate of heating determines the rate of movement and hence the tripping time, and provides an inverse time characteristic. The power consumption of the bimetal heating strips varies from 2 to 2.5 watts/phase, i.e. a total of nearly 7.5 watts.

The latest practice of manufacturers is to introduce a very sensitive differential system in the tripping mechanism to achieve protection even against single-phasing and severe voltage unbalances. In the relays with single-phasing protection a double-slide mechanism is provided. Under single phasing or a severe voltage unbalance, the two slides of the relay undergo a differential deflection. One slide senses the movement of the bi-metal that has deflected to the maximum, while the other senses the minimum. These slides are linked so that the cumulative effect of their movement actuates a micro-switch to trip the relay. Figure 12.12 illustrates the tripping mechanism of an overcurrent-cum-single-phasing thermal relay. Because of differential movement it possesses dual characteristics, as shown in Figures 12.13(a) and (b), one for an ordinary overcurrent protection during three-phase normal operation (Figure 12.13(a)) and the other with differential movement for overcurrent protection during a single phasing or severe unbalance (Figure 12.13(b)). For instance, for a setting at the rated current (100% I_r) under normal conditions the relay would stay inoperative (Figure 12.13(a)), while during a single phasing it will actuate in about 200 seconds (Figure 12.13(b)) and provide positive protection against single phasing.

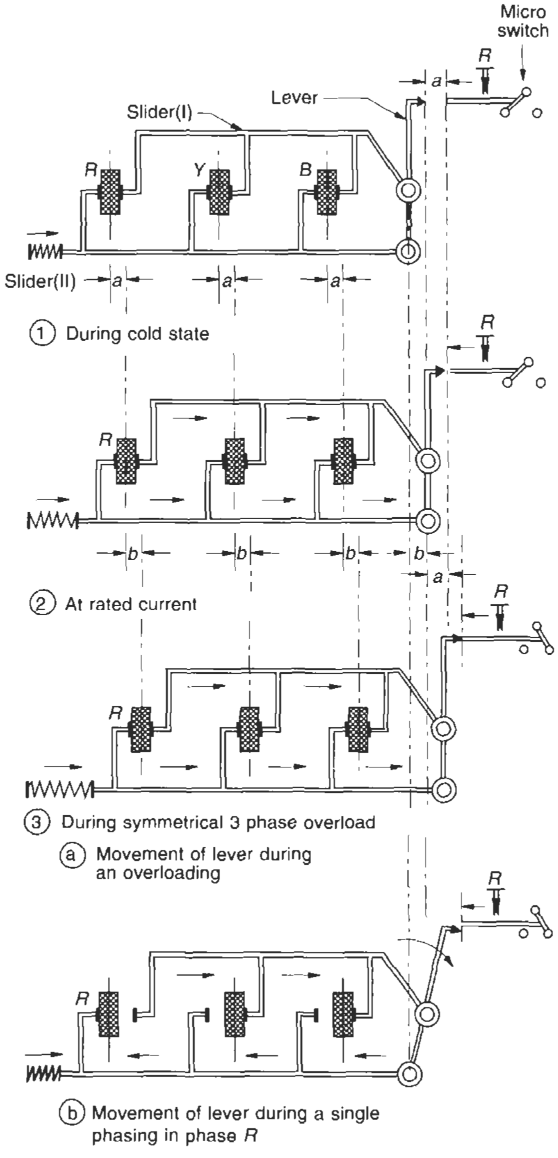

Tripping action of the relay

Figure 12.12 Tripping mechanism of an overcurrent-cum-single-phasing thermal relay

Characteristics of a bi-metallic thermal relay

The thermal characteristics are almost the same as those of an induction motor. This makes them suitable for protecting a motor by making a judicious choice of the right range for the required duty. (See Figure 12.11 for a typical thermal overload relay and Figure 12.13 for its thermal characteristics.) Ambient temperature compensation is achieved through an additional strip in the overload relay, which operates the tripping lever in the other direction than the main relay to achieve a differential effect and is so arranged that it is independent of the main relay.

Operation of the relay may not necessarily start at the preset value due to certain allowable tolerances. As in IEC 60947-4-1, the relay must not trip within two hours at 105% of FLC but it must trip within the next two hours when the current rises to 120% of FLC. Also, it should trip in two hours in the event of single phasing when the line current in the healthy phases is 115%, but it should not trip in less than two hours during a healthy condition,

---

*Any bi-metal combination, having large differences in their coefficients of linear expansion, such as a bimetal of brass and steel is used for such applications. One end of a strip is fixed and the other is left free for natural movement. When heated, brass expands more than the steel and bends towards the steel as shown, giving the desired movement to actuate a tripping lever.

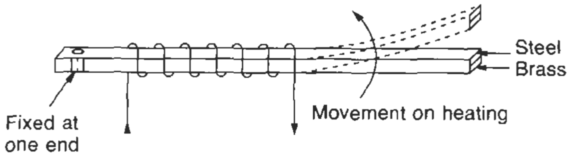

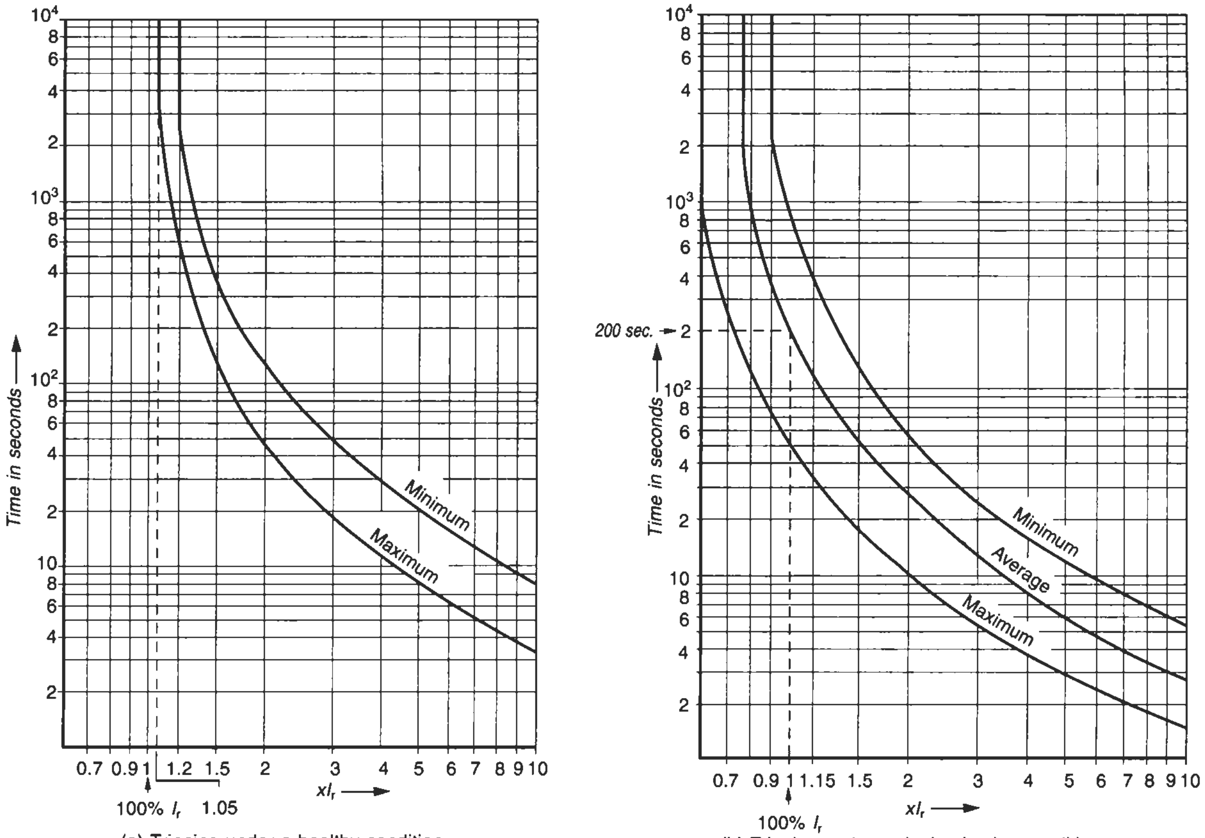

(a) Tripping under a healthy condition.

(b) Tripping under a single phasing condition.

Figure 12.13 Typical characteristics of a thermal overcurrent relay

when two of the phases carry 100%, while the third carries 90% of FLC (a case of voltage unbalance). The curves of Figure 12.10 illustrate the likely operating currents in different phases of a delta-wound motor on single phasing or voltage unbalance. A good thermal relay should be able to detect these operating conditions and provide the required protection. The thermal curve of a relay is thus in the form of a band as shown in Figure 12.14.

With the introduction of single-phasing detection and protection feature in the conventional thermal relays the tripping current–time (I^2 versus t) characteristics of the relay traverse almost the same thermal curve as may be prevailing in the most vulnerable phase of the motor winding during a single phasing, i.e. according to curve 'X' of Figure 12.10. The characteristic curve of the relay is chosen so that it falls just below the motor thermal curve and has an adequate band formation, somewhat similar to the curves of Figure 12.14.

Relays for heavy duty

Such relays may be required for motors driving heavy-duty loads with large inertias or for motors that employ reduced voltage starting and require longer to accelerate. Consequently, a relay which can allow this prolonged starting period without causing a trip during the start will be desirable. CT-operated relays can be used for such duties. They comprise three saturated current transformers (CTs) associated with the ordinary bi-metal overcurrent relay (Figure 12.15). These saturated current transformers linearly transform the motor line or phase currents up to a maximum of twice the CT primary current. Above this ratio, the cores of the CTs become saturated and prevent the secondary circuit reflecting the starting current in the primary and thus prevent the relay from tripping during a permissible prolonged start. For example, a CT of 150/5A will have a saturation at approximately 300 A, irrespective of the magnitude of the starting current. For schematics of such relays refer to Figure 13.54.

Overcurrent setting of relays

These can be adjusted by varying the contact traverse. The mechanism's design is such that an increase or a difference in the line currents, due to voltage unbalance or single phasing, drives the mechanism towards the tripping lever. These relays operate at 100% of their setting and are therefore set at

$$\text{Relay setting (\% of FLC)} = \frac{(\text{Operating current \%}) \times I_r}{(\text{CT ratio}) \times (\text{Relay rating})} \quad \text{(typical)}$$

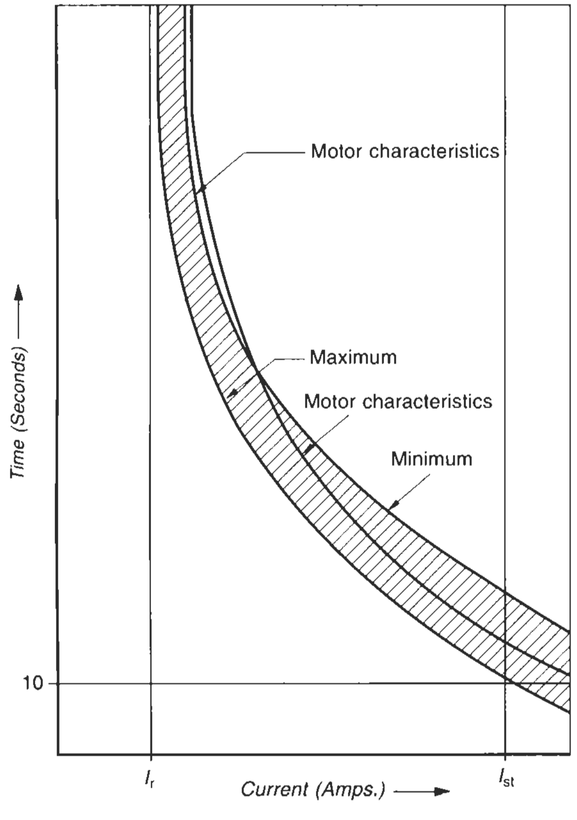

Figure 12.14 Operating band of a thermal overcurrent relay

Note All thermal relays are available in two types of trip contacts, self (auto) reset and hand (manual) reset. In self reset relays, after a trip the relay resets automatically, as soon as the bimetallic element cools down and regains its original shape. In a hand-reset relay, after every trip the operator has to reset the relay manually before a restart of the motor. The latter type thus provides an opportunity to the operator to investigate the causes of a trip and correct these, if possible, before a restart. In the former case, the motor, without being subjected to an investigation, may restart on its own (when it is so wired) as soon as the bimetal cools. Since it may not be feasible to achieve bimetallic elements having identical cooling characteristics as those of the motor, it is likely that the bi-metal may cool faster than the motor and allow the motor to restart, without allowing adequate time to cool. In fact, the motor windings have a considerably higher thermal time constant than the bimetal relays and cool more slowly than the relays. Whereas the relay will permit rapid repeated switchings, these may not be warranted. Hand-reset relays are thus preferred, wherever possible, to give the operator an opportunity to investigate the causes of tripping before a restart.

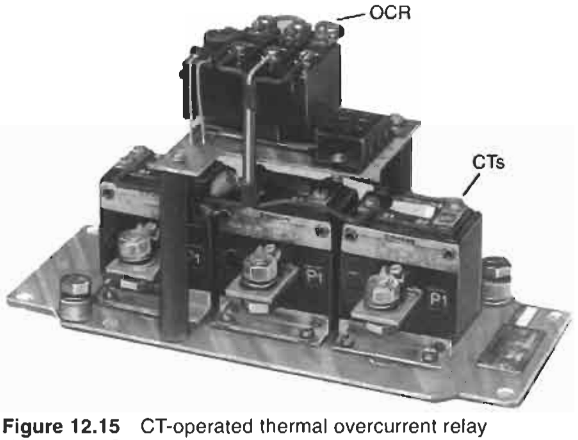

Figure 12.15 CT-operated thermal overcurrent relay ((Courtesy: Siemens)

Eutectic alloy relays

These relays also possess characteristics similar to those of a bimetallic relay and closely match the motor heating and cooling curves. They are basically made of a low-melting eutectic alloy which has defined melting properties. The alloy, with specific proportions of constituent metals such as tin, nickel and silver, can be made for different but specific melting temperatures. This property of the alloy is used in detecting the motor's operating conditions.

Such relays are in the form of a small tube inside which is a loosely fitted rotatable shaft, held by a very thin film of this alloy. The alloy senses the motor temperature through a heater connected in series with the motor terminals and surrounding this tube. When the motor current exceeds the predetermined value, the alloy melts and enables the shaft to rotate and actuate the lever of the tripping mechanism.

Such relays are satisfactory in performance and may be adopted for all industrial controls. Some of the features of these relays for use on motor starters are given below:

1 The motor can be switched ON only after the alloy solidifies again and hence prevents the motor from an immediate switching after a trip, thereby giving the motor adequate time to cool.
2 An inadvertent or deliberate high setting of the relay (which is quite common to prevent frequent trippings) than recommended is not possible on these relays due to their very narrow operating range. Prima facie, it may appear to be a disadvantage with such a relay, as a number of alloy 'strip sets', with different operating ranges, may have to be stocked for every motor. But they provide more precise protection for the machine.

Note The eutectic relays have an advantage by setting the pointer more closely in the field, based on the actual measurement of the load current.

3 Since the operation of the eutectic alloy relays depends upon the magnitude of heating, which is a function of current and time, these relays also give an inverse current–time characteristics.
4 Due to their very narrow operating range, these relays have limitation in their application on drives with fluctuating loads such as cranes, hoists or pole changing motors, or loads with intermittent duties with frequent variations in the load current. In view of a generally wide voltage fluctuation on an LT distribution network, even a definite duty motor may have cognisable current variations, leading to unwanted trippings of the machine.

Note In view of these limitations, such relays did not find adequate acceptance under Indian conditions. As a result, their manufacture has been discontinued.

Large LT motors

Large motors call for a more judicious selection of relays. Unlike small motors, one cannot take for granted that the thermal characteristics of the relay will be the same as that of the motor, and arbitrarily select any thermal relay. To make use of the optimum capacity of a motor and to yet protect it from all possible unfavourable operating conditions it is essential that the motor and the relay's thermal characteristics are matched closely.

Motors designed according to IEC 60034-1 are not meant for continuous overload running unless specifically designed for this. They should be closely protected with the available devices. On the one hand, the protection should be discriminating, to allow for starting current surge and yet detect an overloading, unbalance, short-circuit or a ground fault before these cause damage to the motor. On the other, it should ensure a full-load operation of the motor.

A thermal relay cannot be set reliably to remain inoperative at 100% of the full load current and then operate instantly as soon as it exceeds this. A good thermal relay can be set to operate between 110% and 115% of the I_r, or even more if that is desirable, provided that the thermal capacity of the motor can permit this. To ascertain this, availability of the motor thermal withstand curve is essential. Accordingly, the relay can be set for the optimum utilization of the motor by setting it for

Relay setting (% of FLC)

$$= \frac{\text{Motor maximum operating current (\%)}}{1.1 \text{ or } 1.15} \text{ (typical)}$$

Additional protection through a supplementary IDMT relay

Since thermal relays, with numerous characteristics and adjustable settings to match every individual motor, are not feasible, the nearest characteristic relay available in that range must be chosen. If it is considered necessary to ensure adequate protection at each point of the motor curve, this relay may be additionally supplemented through an inverse definite minimum time (IDMT) relay, having a definite time or inverse to very inverse time characteristics, whichever may best suit the motor's unprotected region on the thermal curve, as illustrated in Figure 12.16. As can be observed, the closest relay chosen for this motor does not protect it during a start due to a higher tripping time than the motor thermal withstand time ($t_r > t_m$), while during a run, beyond the operating region 'A', it lies closely below the motor curve as required. During a start, therefore, it has been supplemented by an IDMT relay, whose starting characteristic lies closely below the motor thermal withstand curve ($t_m > t_{ir}$) and provides the required starting protection. Hence with the use of these two relays, the motor can be fully protected.

Note It is also possible that in the operating region, beyond point 'A', the curve of the thermal relay had fallen far below the motor thermal curve and had overprotected the motor. In other words, it would have underutilized its capacity, in which case, it will be necessary to call for a reselection of the thermal relay that would permit optimum utilization of the machine and, if necessary, giving it support through an IDMT relay to cover the underprotected region. Such a combination of an OCR and an IDMT relay is satisfactory for detecting a system fault, overloading or a stalling condition but it cannot guarantee total protection. This combination does not trace a replica of the motor heating and cooling curves. It can simply detect the motor line currents and not the conditions that may prevail within the windings, such as those as caused by an unbalance or a single phasing. Nor can they accurately assess the rotor's heat caused by prolonged starting time or frequent starts. These relays, at best, can be employed with instantaneous definite minimum time to inverse and very inverse I^2-t characteristics to match the machine's requirement as closely as possible. In view of this, it will be worth while to have a single device protection against overload and stalling which may occur due to undervoltage, unbalance, single phasing or a ground fault. Such a protection is possible through a single device motor protection relay, discussed in Section 12.5.

HT motors

These call for a closer protection, which is possible through a single point motor protection relay (MPR). Since a single MPR provides protections against unfavourable operating as well as fault conditions, we discuss this relay separately in Section 12.5.

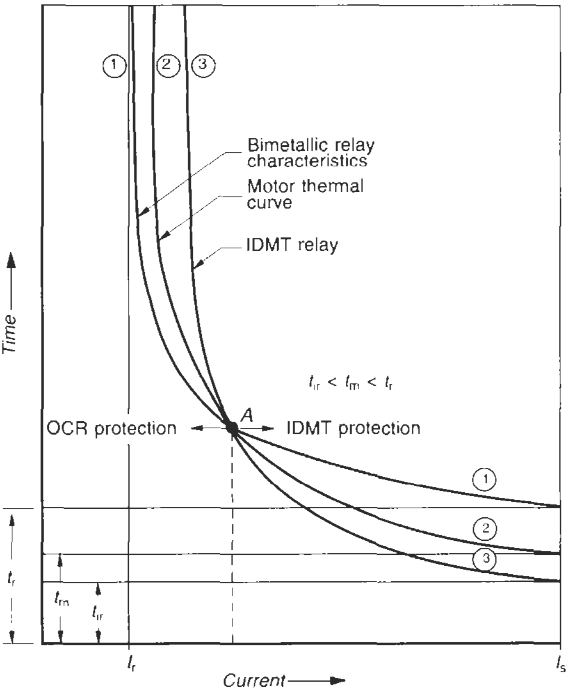

Figure 12.16 Supplementing a thermal relay with an IDMT relay for complete motor protection

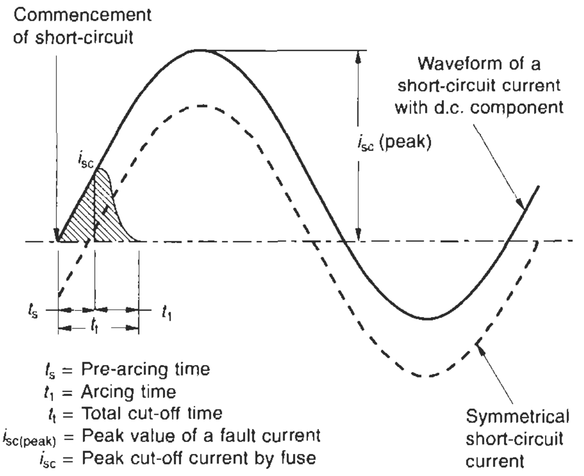

Figure 12.17 Cut-off feature of an HRC fuse

12.4.2 Protection against fault conditions

Protection against short-circuits (use of HRC fuses)

It is always desirable to protect a power circuit against short-circuits separately. HRC fuses are the immediate answer to such a requirement for small and medium-sized LT motors. They have a delayed action characteristic under an overload and are instantaneous against a short-circuit condition and thus inherit the quality of discrimination. They reduce the electromagnetic and thermal stresses and enhance the withstand capacity of the protected equipment for higher fault levels. Quite often, they are used on the receiving end side of a supply system to enhance the short-circuit withstand capacity of all the equipment connected in the circuit and installed after the HRC fuses. Figures 12.17–12.19 illustrate how the HRC fuses, by quickly isolating the circuit on a fault well below the prospective fault level, reduce the electromagnetic and thermal stresses on the connected equipment. If the same fault had been cleared by an ordinary short-circuit relay it could reach its momentary peak value, which can rise to 2.2 times the r.m.s value of fault current in LT and 2.5 times in HT circuits (Table 13.11) as it had taken more than one-half of a cycle to clear the fault. For instance, a fuse of 320 A, of characteristics shown in Figure 12.18, will cut off a fault of 30 kA symmetrical, with a crest (prospective) value of around 63 kA at only 15 kA, which is well below its prospective value.

Selection and coordination of fuse rating

The selection should be such as to provide proper discrimination at the various levels of a multi-distribution network. Our discussions generally take account of the recommendations in IEC 60947-4-1 regarding coordination between the short-circuit protection and the main components such as switching devices [switch, breaker, MCCB (moulded case circuit breaker) or MCB (miniature circuit breaker) and contactor] and the overload relay. These recommendations permit damage of components on fault to varying degrees as noted below:

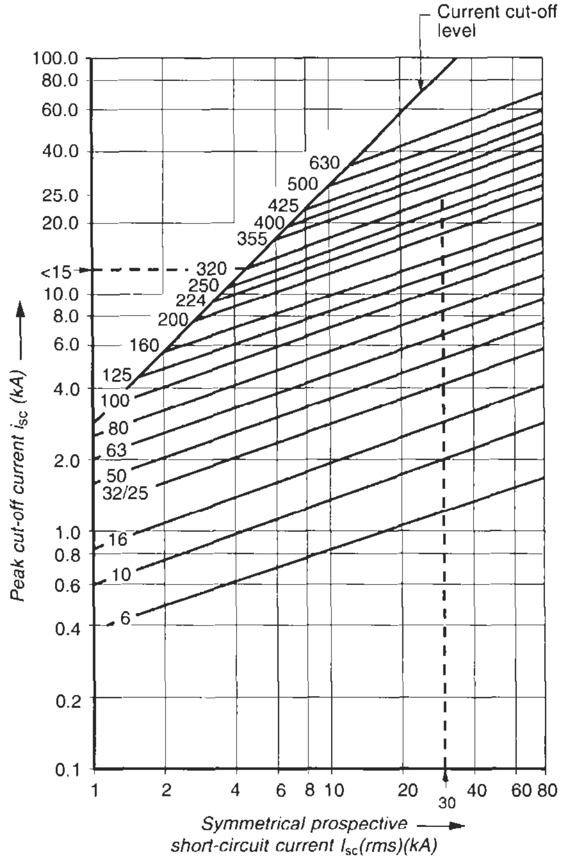

Illustration:
A 320A fuse will cut-off an I_{sc} of 30 kA (peak value up to 2.1 × 30 kA) at less than 15 kA (peak).

Figure 12.18 Typical current cut-off characteristics for LT HRC fuses at prospective current up to 80 kA

- *Type 1:* Under short-circuit conditions the contactor or the starter will cause no damage to the operator or the installation but may not remain suitable for further service without repairs or replacement of some of its parts. In other words, contact welding of the contactor is allowed and burnout of OCR is acceptable. In either case replacement of components may be necessary.
- *Type 2:* On the other hand, Type 2 degree of protection limits the extent of damage in the case of a short-circuit. Now under short-circuit conditions, the contactor or the starter will present no risk to the operator or the installation and will remain suitable for further service. In other words, no damage to the contactor or the OCR is permitted. It may, however, be interpreted that contact welding may be permissible to the extent that the contactor can be put to service once again after a brief period by separating the contacts with the help

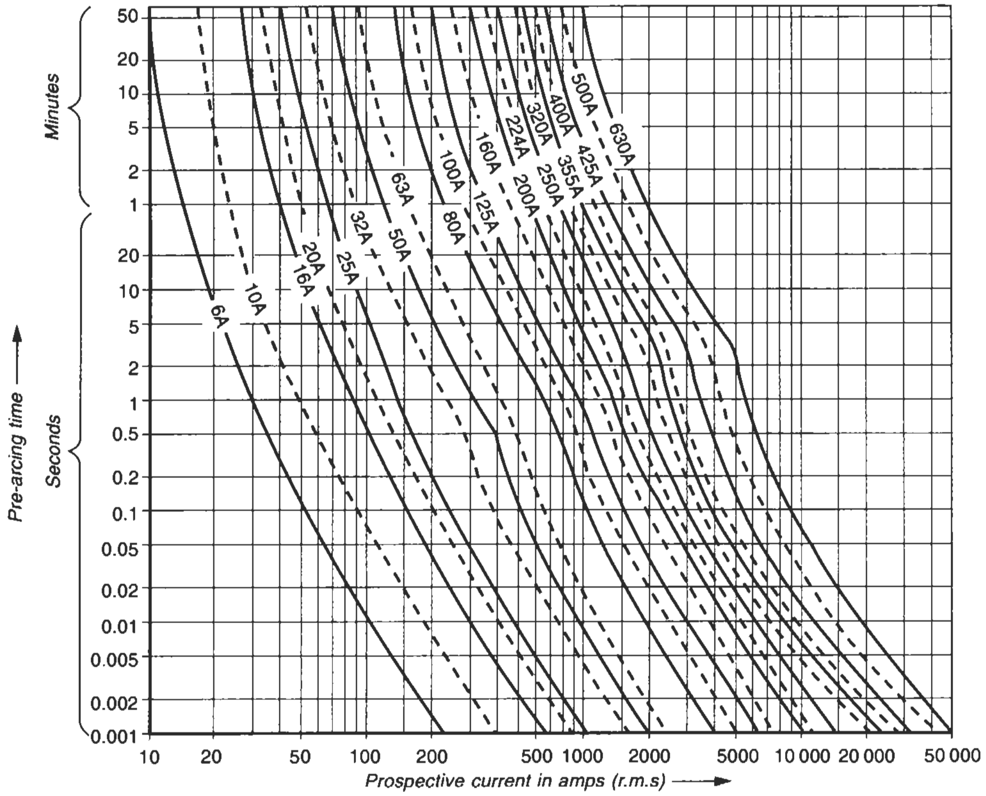

Figure 12.19 HRC fuse characteristics

of a tool such as a screw-driver but without calling for replacement of any part.

Type 2 coordination is more prevalent and commonly used for all industrial applications. Below, we concentrate on coordination Type 2, permitting the least damage and longer service life. This coordination can safely withstand normal fluctuations in system parameters and operating conditions during normal working. It is always advisable to verify the authenticity of the coordination in a laboratory. For procedure, to establish the type of co-ordination, refer to IEC 60298. To achieve the required precise coordination we discuss a few typical cases below.

Discrimination between fuse to fuse
Refer to the normal distribution network of Figure 12.20. Selection of the fuse ratings must be made on the following basis:

(a) Only fuses nearest to the fault should operate. For instance, for a fault at location *C*, the only fuses at location *C* should operate and not those at *B* or *A*.
(b) To ensure the above, the total arc energy, $I^2 \cdot t_t$, of the lower fuses at *C* should be less than the pre-arcing energy, $I^2 \cdot t_s$ of the upper fuses at locations *B* or *A*.

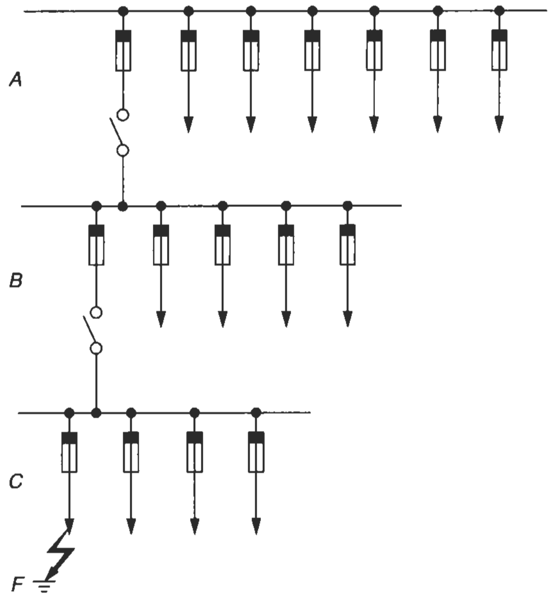

Figure 12.20 Coordination of fuse ratings and their characteristics

In other words, the current–time ($I^2 - t$) characteristics of fuses at C should lie below that of fuses at B, and that of fuses at B, should lie below the fuses at A, etc., throughout their operating range.

Coordination of fuses with an overcurrent relay or any other overcurrent protective device
The selection of the fuses should be such that:

(a) They do not operate during a start.
(b) They do not operate against overloads as these are taken care of by the overcurrent relay or any other overcurrent protective device.
(c) They should isolate the supply to the motor in the event of a fault sufficiently quickly before the fault causes damage to the connected equipment by burning and welding of contacts of the contactor or by causing permanent damage or deformation to the bi-metal elements of the OCR. This is possible by ensuring the let-through energy ($I^2 \cdot R \cdot t$) of the fuses under fault conditions to be less than the corresponding let-through energy of the OCR (Figure 12.21).

Coordination of fuses with a breaker
When the fault level of the system is more than the breaking (rupturing) capacity of the associated breaker (usually MCB or MCCB) or when the fault-making capacity of the breaker falls short of the momentary peak value of the fault current of the system (Table 13.11) that fuses can be used before the breaker to provide back-up protection and supplement its breaking capacity, to make it capable of performing switching operations successfully on a fault. Coordination between the fuses and the built-in overload and short-circuit releases of the breaker can be carried out on the following basis:

(a) Overloads on the system should be cleared by tripping the breaker through the in-built releases only and not through the fuses.
(b) Short-circuit currents up to the breaking capacity of the breaker should also be cleared by tripping the breaker through the in-built releases and not through the fuses.
(c) Short-circuit currents in excess of the breaking capacity of the breaker alone should be cleared by the operation of the fuses.

To achieve the above the characteristic of the fuses should lie well above the characteristic of the overcurrent and short-circuit releases of the breaker for the lower region of currents, such that only the breaker operates. However, it should lie well below the characteristic of the breaker in the higher region of currents to ensure that the fuses operate sufficiently quickly and long before the in-built releases. The breaker is thus prevented from operating at currents that are in excess of its breaking capacity. Figure 12.22 illustrates such a coordination.

Note
1 Back-up protection to supplement an interrupting device to make-up its rupturing capacity and make it capable of meeting the system fault level is a concept of LT systems only to sometimes reduce cost. Interrupting devices for an HT system normally possess adequate rupturing capacity to meet system needs easily. Moreover, HRC fuses beyond certain voltages (>11 kV) and current ratings (>1000 A) are generally not used. Where interrupting devices have a limitation in their rupturing capacity (which may sometimes occur on an EHV system), the system fault level can be altered accordingly, so that the available interrupting devices can still be employed (Section 13.4.1(5)).

On an LT system too back-up protection is not recommended for an ACB or an OCB as they both would possess a tripping time of more than a cycle (Table 19.1) compared to the *current limiting* properties of the HRC fuses. Current limiting properties of HRC fuses make them operate much faster (< $^1/_2$ cycle) than a breaker, during a fault condition, even when the breaker could safely clear the fault. In such cases, therefore, when breakers are required for a higher rupturing capacity than a standard breaker possesses, then a breaker of a higher rating, which may

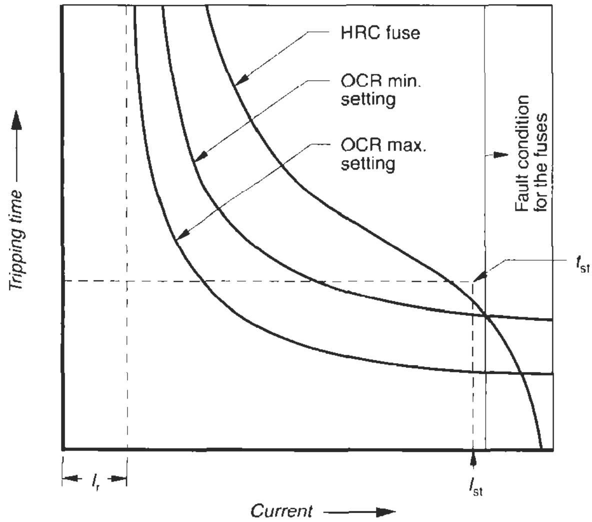

On fault I^2Rt (fuses) < I^2Rt (OCR)
t_{st} – Safe thermal withstand time of motor during a full voltage start

Figure 12.21 Coordination of fuses with an OCR

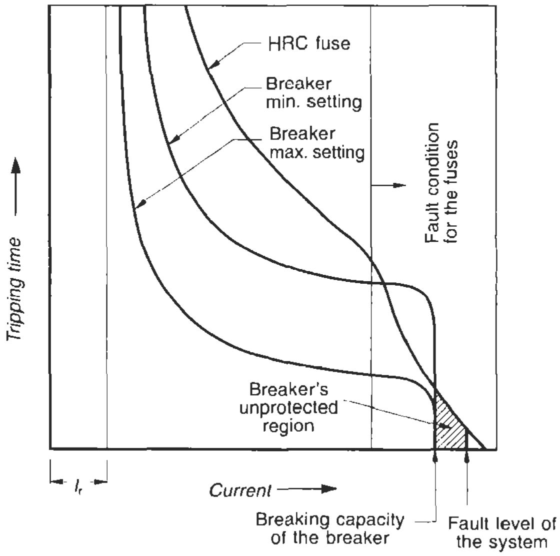

On faults exceeding I_{sc} of breaker, I^2Rt (fuses) < I^2Rt (breaker)

Figure 12.22 Coordination of fuses with a breaker have the required fault level, may be chosen with a lower setting of the OCR. This protection may, however, be applied in an MCB or an MCCB, when they possess a rupturing capacity less than required. Since the MCB and the MCCB can both be current limiting the characteristics of the fuses and the breakers can be coordinated such that faults that are in excess of the rupturing capacity of the breakers alone are handled by the fuses.

In such cases it may often be possible to meet the requirement by selecting a higher frame size of MCB or MCCB, which may possess a higher rupturing capacity also. If not, and to save on cost, one may provide HRC fuses for back-up protection.

2 To make a proper selection of HRC fuses it is essential that the current–time characteristic curves for the releases of the breaker and the fuses are available from their manufacturers.

Coordination of fuses with a switch or a contactor

Since both these devices possess a certain level of making and breaking capacities, the same criteria will apply as for the breaker noted earlier. Rating of fuses shall not be more than the switch or contactor rating.

Coordination of fuses with a transformer

Consider a distribution HV/LV transformer. If the fuses are provided on both HV and LV sides, the fuses on the HV side must protect a fault within the transformer while the fuses on the LV side must clear overcurrent and fault conditions on the LV side. Thus, for a fault on the LV side, only the LV side fuses must operate and not the HV side, similar to the requirements discussed above.

If the transformer is HV/HV, the same requirement must prevail, i.e. for a fault on the downstream (secondary side) only the downstream fuses must operate and not the fuses on the upstream (primary side).

Note It is, however, possible to eliminate the use of HRC fuses in LT systems at least, with the availability of more advanced technology in an MCCB or an MPCB (motor protection circuit breaker). See Section 12.11 for a fuse-free system.

12.4.3 Protection against stalling and locked rotor

Motors which do not possess a sufficient gap between their hot withstand and starting curves generally call for such a protection. Large LT motors and all HT motors are recommended to have a separate protection against such a condition. A locked rotor protection relay basically is an overcurrent relay, having an adjustable definite time delay to trip the motor when it exceeds its permissible starting time, but before the safe stall withstand time. This feature is available in a motor protection relay discussed later. Where, however, such a relay (MPR) is not provided, a high-set IDMT overcurrent relay can be chosen to match the upper range of the motor thermal withstand curve (Figure 12.16).

12.4.4 Protection against voltage unbalance or negative phase sequence

Such a condition also generates negative sequence components. For small and medium-sized motors, say, up to 100 h.p., no separate protection for such a condition is normally essential, when the overcurrent relay possesses a built-in single-phasing protection or the tripping circuit is provided with a single-phasing preventor. If a separate protection for this is considered desirable, one may use a negative phase sequence relay like the one shown in Figure 12.23(b) or similar static or PLC-based relays. For larger motors, however, one should employ a relay like a motor protection relay, which covers in one unit all the protection as described in Section 12.5.

Note One should employ only current sensing relays as far as possible for such applications as a negative sequence current has a severe effect on motor windings due to a much lower negative sequence impedance of the motor (Section 12.2(v)) than a corresponding negative sequence voltage.

Such a relay is connected on the supply side as shown in Figure 12.23(a). The arrangement is such that unless the relay closes, the motor switching circuit will not energize and the motor will not start. The contact closes only when the supply voltage is normal and the phase sequence positive. Even for undervoltage conditions, the torque developed by the relay may not be adequate to close the circuit. Such relays are, therefore, effective against

(i) Negative sequence voltages when torque developed by its coil is negative.

(ii) Voltages far too low to produce an adequate torque to close the relay. This is possible during a start only, as during a run the relay contacts are already established and the coil does not detect a fall in the voltage.

(iii) Single phasing during a start, as this will also produce a negative torque to close the relay.

12.4.5 Protection against single phasing (SPP)

An ordinary thermal relay senses only the line currents and is not suitable for detecting a single-phasing condition. Referring to the curves of Figure 12.10, an ordinary relay set at 110% of FLC will not trip in the event of a single phasing when the motor is operating underloaded, say, at only 60% or less of the rated current, while in the lone phase *X*, the current would be as high as 135% of FLC.

For single-phasing protection, 'single-phasing preventors' are available. Although it is essential to protect even a small motor against single phasing, there is little point in employing these preventors unless they form part of the basic starter (OCR with built-in SPP feature) as an economic consideration.

As discussed above, most of the leading manufacturers of switchgear components produce thermal overcurrent relays with a built-in feature of single-phasing prevention. The use of a separate single-phasing preventor device is thus not necessary up to medium-sized motors, where this feature is available in the relays. For large-motors and for critical installations, a separate unit for single-phase protection may be required for prompt single-phasing alarm and/or trip. Interestingly, where star delta switching is employed, the overload relays, which are now connected in phases of the motor windings, automatically sense an abnormal condition in any or all the phases, and provide a single-phasing protection. See the power circuit diagram in Figure 13.56 for more clarity.

A separate single-phasing protection device is available in two versions:

1 Voltage sensing, and
2 Current sensing

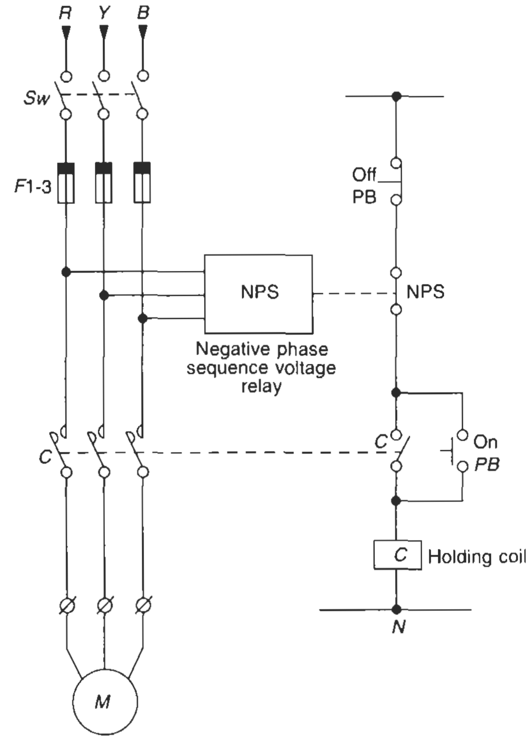

Figure 12.23(a) Schematic for a negative phase sequence (NPS) relay

Voltage-sensing preventors have limitations and are not reliable since they offer protection up to the sensing terminals only. Protection beyond these terminals up to the motor terminals is not possible. In the event of a phase failure beyond this point, the voltage-sensing equipment will not detect this. (See the schematic of Figure 12.24.) Current-sensing preventors are therefore recommended for more reliable detection of a fault anywhere within the system up to the motor terminals. Moreover, voltage-sensing preventors may act erratically, when the motor is generating high back e.m.f. on single phasing, and also when the power factor improvement capacitors are connected across the motor terminals. In this case high back e.m.f. can be produced across the voltage-sensing relays, which can make its operation uncertain.

The current-sensing solid-state type relays consist of a filter circuit to sense the negative sequence current. The output of this filter is proportional to the negative sequence component of the current. The output is fed to a sensor, which detects the level of negative sequence component of current and trips the starter circuit when this level exceeds the set limit. (See Figure 12.25.) Normally such preventors are designed up to 30 A for motors up to 20 h.p. For larger motors, the output current can be sensed through CTs of 5 A secondary (Figure 12.26). 5A secondary is chosen to make detection easy.

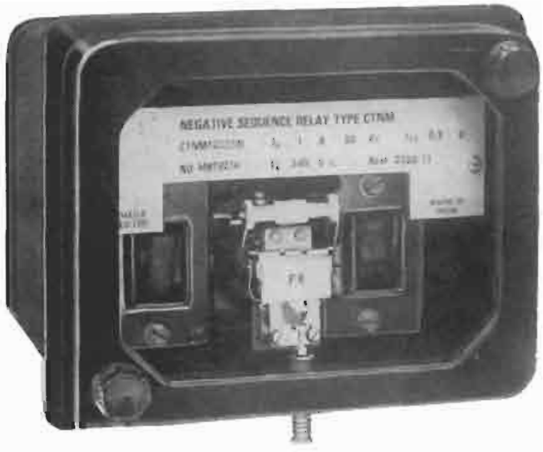

Static negative sequence relay (Courtesy: English Electric)

PLC or micro-processor-based negative sequence relay (Courtesy: Alstom)

Figure 12.23(b)

At a preset value, the relay operates and opens the control circuit to trip the starter unit. To avoid nuisance tripping, due to surges and momentary line disturbances, a time delay of 4 to 7 seconds is normally introduced into the tripping scheme.

12.4.6 Protection against voltage surges
(for systems 2.4 kV and above)

Voltage surges may be of two types, external or internal (Section 17.5). A motor will require protection against both for absolute safety. For external surges, lightning arresters are provided as standard practice at the receiving end as illustrated in Figure 12.27, to protect the electrical installation as a whole. This lightning arrester will limit line surges due to external causes, within safe limits as in Table 13.2 for series I or Tables 14.1 and 14.2 for series II voltage systems. In all likelihood it will also protect the main insulation of the rotating machines. The insulation level of a motor is much less than other electrical equipment such as transformers and switchgears connected

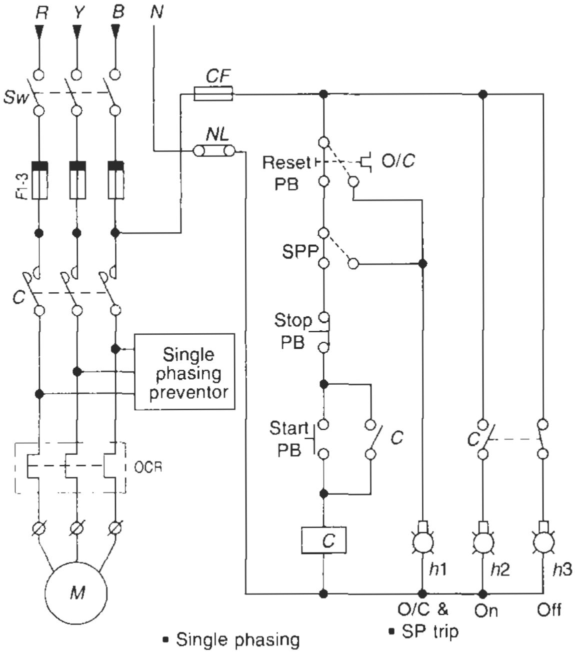

Figure 12.24 Power and control scheme for a voltage-operated single-phasing preventer

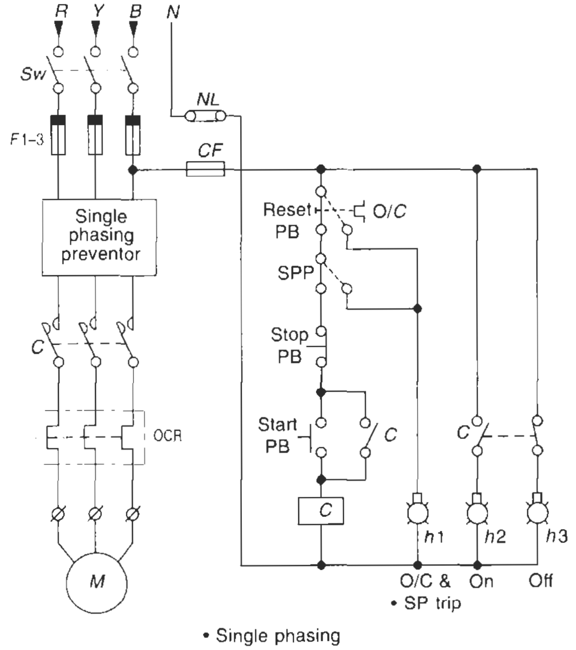

Figure 12.25 Power and control scheme for a current-operated single-phasing preventor (direct sensing up to ≃ 30 A)

on the system. The line side lightning arrester is selected to protect the basic equipment only, but a motor normally installed away from the arrester will be subject to only an attenuated lightning surge by the time it reaches the motor, and hence would be safe.

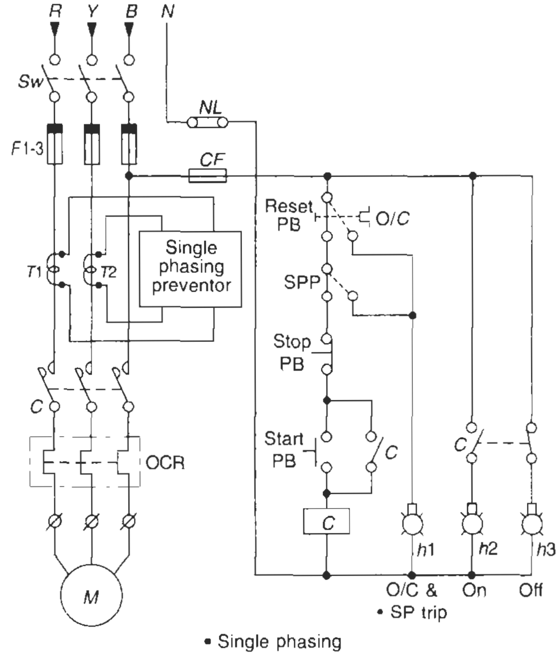

Figure 12.26 Power and control scheme for a current-operated single-phasing preventor (use of CTs for higher ratings)

For internal causes, when considered necessary, particularly when multiple reflections are expected at the motor terminals due to the long lengths of cable between the starter and the motor, an additional surge arrester may be provided at the motor terminals or as near to it as possible, in association with a surge capacitor, as shown in Figure 12.27. This will account for the protective distance (Section 18.6.2) and also limit the magnitude and steepness of the switching surges to protect the turn insulation. This subject is dealt with in greater detail in Sections 17.7 and 17.8.

12.5 Single-device motor protection relays

These relays are programmed to provide all possible protection necessary for a machine in one unit such as overcurrent, unbalance and single phasing, locked rotor, prolonged starting time and multiple starts, short-circuit and ground faults etc. They take account of the heating effect caused by negative sequence components, which may arise due to system unbalance, a fault in the motor windings or a single-phasing condition. They are also temperature compensated and can be set to follow closely the changes occurring in the operating temperature of the machine, so that the machine will trip only when it heats up beyond the permissible limits. It thus ensures the optimum utilization of its capacity. Moreover, the overshoot of the thermal element is kept low (of the order of 2% or so) and the relay can be set between the starting $I^2 - t$ and the 'hot' $I^2 - t$ characteristics, without the risk of operation on a hot start. They thus possess a

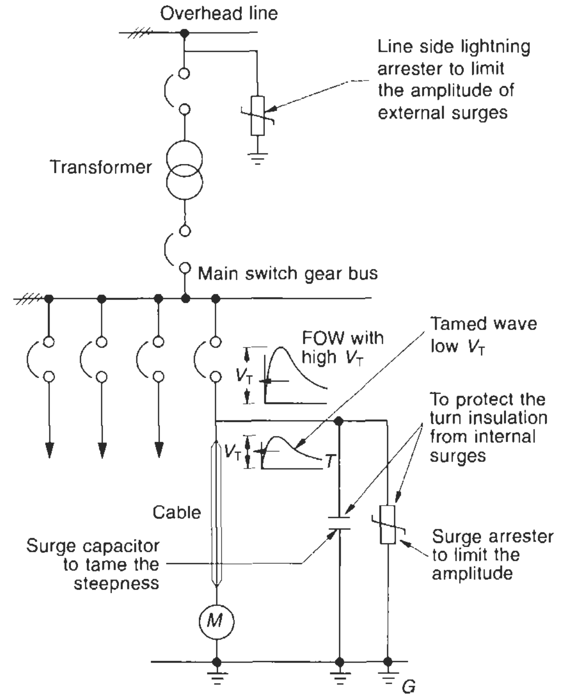

Figure 12.27 Typical scheme for surge protection of a rotating machine

definite advantage over a conventional thermal overcurrent relay. They incorporate circuits which can be set to trace the motor's internal conditions during operation and hence provide a thermal replica protection to the machine through signal, blinker and alarm facilities, available with them. These relays are recommended for large LT motors (say, 300 h.p. and above) depending upon their application and all HT motors, where more precise and accurate protection is rather essential, besides requiring the optimum capacity utilization of the machine. A good relay will normally incorporate the following features:

1. It measures r.m.s. values to take account of harmonics present in the supply system. $I_{r.m.s.} = \sqrt{I_1^2 + I_3^2 + I_5^2 + \ldots}$ where I_1, I_3, I_5 are the different harmonic components.
2. It stays immune under permissible operating conditions.
3. It gives an alarm or an indication of a likely unfavourable operating condition well in advance.
4. It trips quickly on a fault condition and relieves the motor from the prolonged stresses of the fault, which may cause excessive thermal and electrodynamic stresses.
5. It simulates the motor's cooling-down condition, for at least 30–60 minutes, during a temporary power failure.
6. It monitors and displays the starting conditions such as time of start and number of starts etc.
7. It measures the values of V_1, I_1 and temperature, θ etc., and displays/monitors the cause of the last trip.
8. Trip indication will memorize the operating conditions of tripping with causes of the trip until the fault is acknowledged.
9. All trips with causes and starting parameters are programmed for an accurate diagnosis of the causes of a trip. It helps to identify remedial action necessary in the operating conditions of the load for a healthy functioning of the machine.
10. With these relays, there is no need to use HRC fuses or thermal OCRs. The power circuit is thus devoid of any heat generation in these components and provides energy conservation.

These relays are available in various versions such as,

- Electromagnetic: These are quickly outdated but we discuss these relays briefly below to give an idea of the basic operating principles of such relays. The same principle of application is then transformed into a static or microprocessor-based relay
- Solid state: based on discrete ICs and
- Solid-state microprocessor based: these are more sensitive and accurate. They can be made digital to be connected to a computer for remote monitoring and control of the process that the motor is driving.

12.5.1 Electromagnetic relays

In this case the relay is in the form of a bridge circuit and thermal detection is achieved through various methods other than a bi-metallic heater element discussed below.

Heat sink method

This is achieved through a heat sink thermistor, Th_1. The thermistor has two heaters H_1 and H_2 (one heated by the positive and the other by the negative sequence component). They form one arm of a sensitive Wheatstone bridge. A temperature-compensated thermistor, Th_2 forms the other arm of the bridge (Figure 12.28). The heat sink thermistor is heated directly or indirectly by the line currents. The heating changes its resistance, which is used to provide a signal by the relay, for either tripping or an alarm. Heater, H_2, of the negative filter network is so designed that it produces six times the heat that would be produced by heater H_1 for the same amount of current. Heaters H_1 and H_2, thus detect a heating effect equivalent to $(I_r^2 + 6I_u^2)$, which would be the maximum heat produced in the stator or the rotor during an unbalance or a single phasing, as discussed in Sections 12.2(v) and 12.3. They also overcome the deficiency of the conventional thermal overcurrent or IDMT* relay by providing longer periods on overloads yet tripping quickly on short-circuits. These inherent features of heat sink relays make them ideal for motor protection and are used by various manufacturers of motor protection relays. These relays also possess a property to discriminate

---

*IDMT: instantaneous definite minimum time.

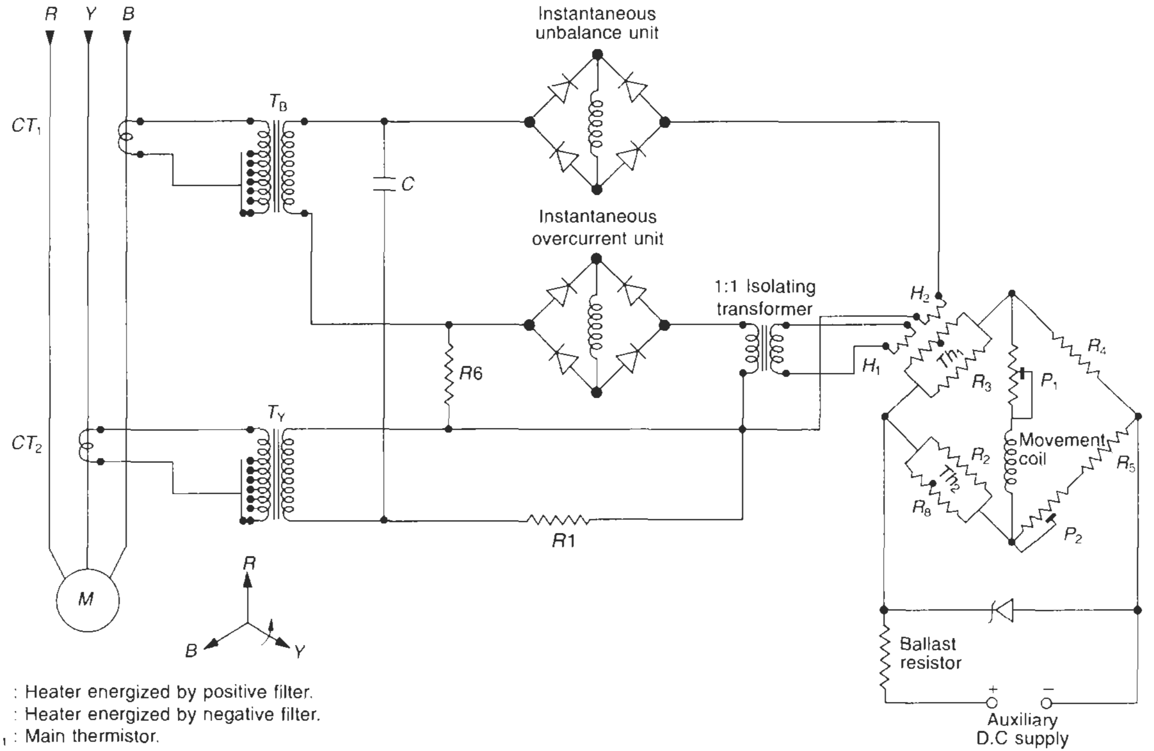

H_1 : Heater energized by positive filter.
H_2 : Heater energized by negative filter.
Th_1 : Main thermistor.
Th_2 : Ambient temperature compensated thermistor.
R_2; R_3; R_8 etc. : To give the bridge linear resistance/temp. characteristic.

Figure 12.28 A typical scheme of a heat sink circuit

between start and stalling conditions due to their low 'overshoot' and can therefore detect a prolonged starting or stalling condition without a trip.

Operation of heat sink thermistor relay

This relay will operate whenever there is an unbalance in the bridge circuit due to a change in the resistance of the main thermistor, because of the combined heating of heaters H_1 and H_2, as a result of overload, voltage unbalance, inter-phase fault or a single phasing. The operating time will depend upon the rate of heating, i.e. the amount of overload or unbalance, thus giving an inverse time characteristic.

The following protections may be possible:

1 Overload
2 High set instantaneous overcurrent through the positive sequence network. An initial delay of a few cycles is introduced to avoid a trip during a start, whereas it will trip instantly on a phase fault, cable fault or a short-circuit.
3 Instantaneous unbalance current.
4 Prolonged starting and stalling protection. When the starting current of the motor does not fall within a predefined starting time or up to the thermal withstand time of the machine, the relay will trip depending upon the setting of its stalling detection unit.
5 Instantaneous ground fault by providing a zero sequence relay in the residual circuit of the CTs.

Therefore a motor protection relay, which may be a 'normal time' or a 'long time', will be able to provide through one unit a comprehensive motor protection, generally requiring no more protection, except for a surge protection, which may be needed for an HT motor.

12.5.2 Solid-state relays

There are no moving parts in these relays (Figure 12.29(a)). They employ static technology, i.e. transistorized integrated circuits to achieve a thermal replica protection. To detect the presence of a negative sequence component, filter circuits are used to separate positive and negative components I_r and I_u of the input current in each phase. These currents are then used to produce voltages proportional to these currents. These voltages are then fed to a squaring circuit to give a heating effect in the motor windings proportional to I_r^2 and I_u^2. Figure 12.30(a) is a typical schematic diagram of such a relay and a brief operating description is given below.

The three line currents through the secondary of the three CTs, as shown in Figure 12.30(b), are fed to a sequence filter network which separates the positive and negative sequence components of the line currents drawn by the motor. These currents are then fed to separate

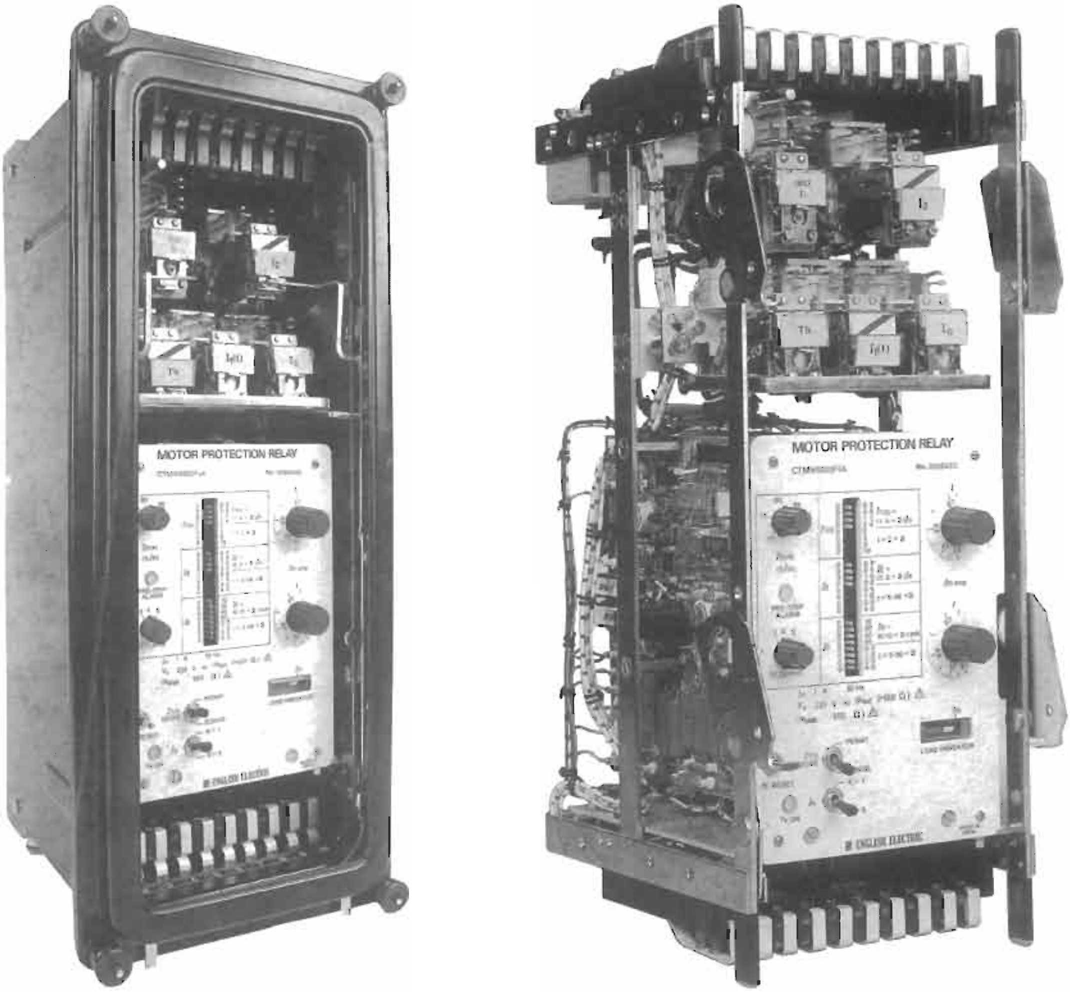

Solid state motor protection relay

Relay withdrawn from its chassis

Figure 12.29(a) (Courtesy: English Electric)

Figure 12.29(b) PLC or micro-processor-based motor protection relay (Courtesy: Alstom)

potentiometers, at different settings, through the instantaneous operating elements I_r and I_u. The potentiometers provide two output voltages V_ℓ and V_u, corresponding to the positive and negative sequence current components respectively. V_ℓ and V_u are fed into the squaring circuits to give $k_1 \cdot V_\ell^2$ and $k_2 \cdot V_u^2$ effects. These values are then added to give an output voltage effect of $k_1 \cdot V_\ell^2 + 6k_2 \cdot V_u^2$ to the integrator. A feedback circuit across the integrator causes the output voltage from the integrator circuit to rise exponentially from zero to a voltage which is equivalent to about 105% (typical) of the relay setting current. The output voltage from the integrator is fed to a level detector, which energizes an output unit when the set voltage is reached. This operates electrically separate contacts that can be used to trip or give an alarm to the motor power circuit.

12.5.3 Microprocessor-based relays

A static relay as discussed above is capable of providing more functions and more accurate operations and can also memorize historical data and monitor a process more closely. This relay can also be provided with a microprocessor. A microprocessor-based relay consists of PC boards, a processor board and other electronic circuits. A typical relay is shown in Figure 12.29(b). These relays can also be made digital to be connected to a central control system for close monitoring and control of a process. Now they can have much wider application, such as better communication and information feedback facilities, to optimize a process and maximize productivity. For more details refer to Section 13.2.3 or contact the manufacturers.

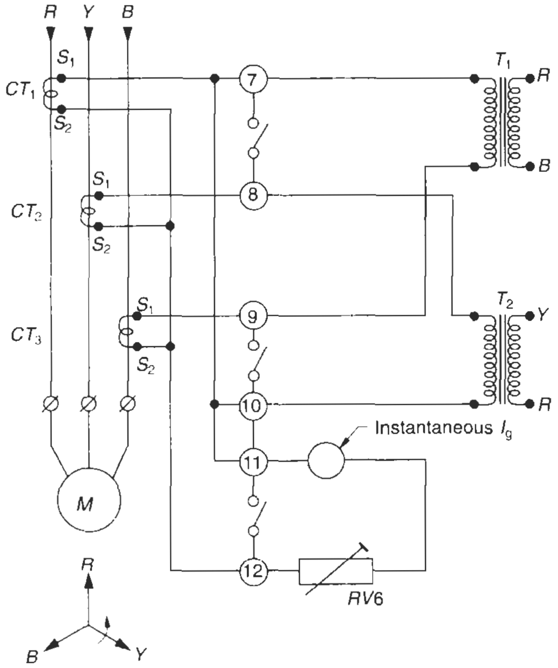

Figure 12.30(a) Power diagram

The following are the normal protections that may be available in both-a solid-state or a microprocessor-based relay, making them a single-device protection:

1 Prolonged starting protection. If the temperature rise of the machine is more than 50% of the permitted rise (θ_m) during the first start, the relay will lock out to allow a pause and prevent a consecutive or a quick restart until the machine cools sufficiently and the total temperature rise θ_c or θ_h does not exceed θ_m (equations (3.2) and (3.4)) during the next start. The starting time is fed to the memory of the relay to monitor the total starting time.
Likely settings – θ versus tripping time, or time of start versus tripping time—whichever occurs first.
Likely features – an advance alarm and an indication before a trip.
2 Stalling or locked rotor protection. This is also detected by the prolonged starting time as well as overheating of the machine. It is possible that the machine was already under operation and hot when it had stalled. Under such a condition, the rotor operates at a high frequency and is more vulnerable to damage. Since it is not possible to create a replica of the rotor, separate

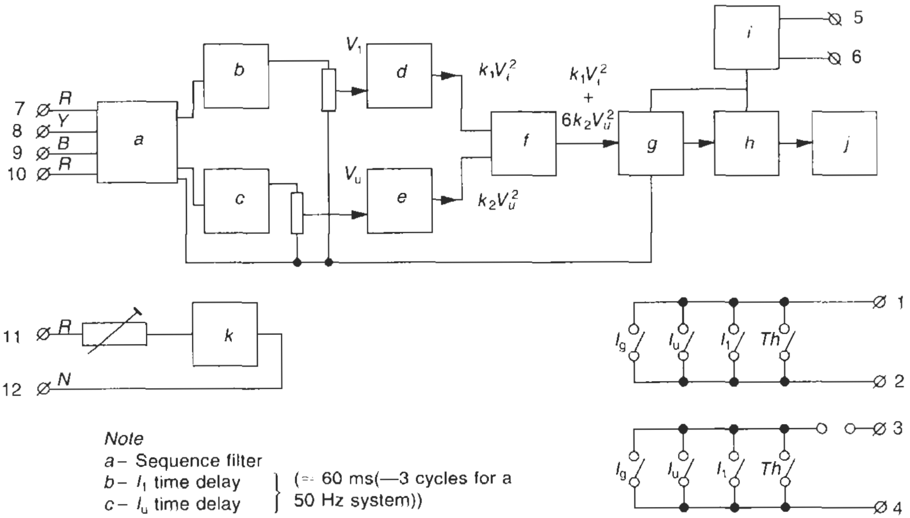

Note
a – Sequence filter
b – I_1 time delay } (≈ 60 ms(—3 cycles for a
c – I_u time delay } 50 Hz system))
d – Squaring circuit
e – Squaring circuit
f – Summation circuit
g – Integrator
h – Level detector and output
i – Power supply
j – Output (T_h)
k – I_g Instantaneous

Figure 12.30(b) Typical schematic illustrating the squaring technique

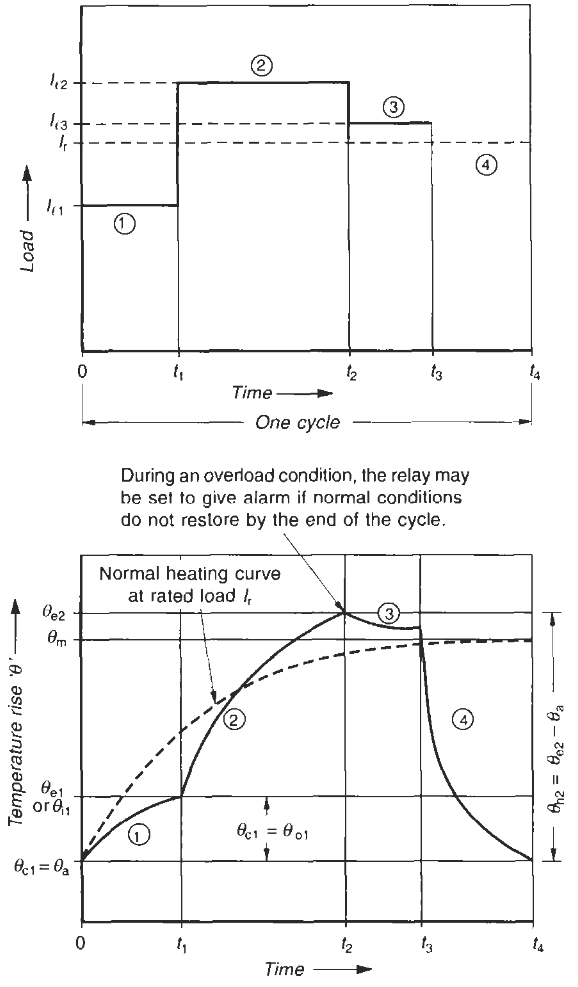

During an overload condition, the relay may be set to give alarm if normal conditions do not restore by the end of the cycle.

Note The thermal data are marked for loads I_{t1} and I_{t2}

Figure 12.31 Heating and cooling curves of an intermittent duty motor

protection, other than a prolonged starting time, is therefore essential to monitor both θ and starting time and hence this protection.

Likely settings – θ versus tripping time or time of start versus tripping time. A problem may arise in providing an accurate time setting when t_{st} is large due to high-inertia drives or reduced switching voltages, when it may approach the safe stall time.

Note In both the above cases, which are almost similar, so far as the switching heats of the stator or the rotor are concerned, the overcurrent protection (noted at serial no. 4) is redundant, as its time constant is much higher (of the order of several minutes) compared to the temperature rise, particularly of the rotor, which is linear and much more rapid under such conditions. Therefore, such protection saves the machine from excessive thermal stresses.

3 Repeat start protection (Figure 12.31). The relay now detects both the summated starting times and temperature rises θ_c and θ_h of the windings. It also detects the cooling time effect between the two starts if it existed, to protect the machine against excessive stresses by a lock-out feature against repeated starts when the summated starting time exceeds the preset time. The total time of start is set according to the thermal capacity of the machine.

Likely settings – summated starting time versus tripping time, or θ versus tripping time.

4 Overcurrent protection. To provide a thermal replica protection, the relay is set according to motor's heating and cooling ($I^2 - t$) curves supplied by the motor manufacturer. If these curves are not available, they can be established with the help of motor heating and cooling time constants, as in equations (3.2) and (3.4). A brief procedure to establish the motor thermal curves when they are not available is explained in Section 3.6.

5 System unbalance protection. As discussed earlier, an asymmetry in the supply voltage causes

- High I^2R losses in the stator, and
- Eddy current losses in the rotor.

Thus, besides voltage unbalance it can also detect an inter-turn fault, which leads to a current unbalance. A small amount of unbalance is already detected by the thermal element of the overcurrent protection but a severe unbalance, such as during a single phasing, would require quicker protection and hence, this protection. The relay may be set for an I_u of around 3% or so.

Likely setting: I_u versus tripping time.

6 Short-circuit protection. To provide an instantaneous tripping on a short-circuit delay of, say, one or two cycles may be introduced into the tripping circuit to bypass any transient currents and avoid an unwanted trip.

Likely setting: I_{sc} versus tripping time.

7 Ground leakage current protection. A separate ground fault protection should normally not be required in view of the protection already available against an unbalance. But since the setting of the unbalanced element may not be sensitive enough to detect a small ground leakage current, a separate ground leakage protection is recommended. This can be achieved by detecting the ground leakage current, I_g, through the ground circuit or the residual current (Sections 21.2.2 and 21.4).

Likely setting: I_g versus tripping time.

The setting may be kept on the higher side to avoid nuisance tripping due to:

(a) Difference in CT outputs which may also cause unbalanced currents and initiate operation of the relay, particularly during a start when the current is high.
(b) Flow of zero sequence cable capacitive leakage currents during an external ground fault, and
(c) Momentary ground transient currents while discharging a switching surge through a surge arrester if this has been provided at the motor terminals.

8 Lockout or blocking feature. Such a feature is necessary for complete safety of the machine after every trip for any of the reasons discussed above. It is imperative

that the relay blocks and prevents the next switching, unless the fault is acknowledged, the reason for the trip is analysed and normal operating conditions are restored. The settings of the relay for all such unfavourable operating or fault conditions are made depending upon the functions and the setting ranges available with the relay. Since all the protections are based on r.m.s. values, a sensitive relay will also detect the harmonic quantities present in the system and provide more accurate protection for the machine.

It may often be asked why separate settings are necessary for different types of protection when it is possible to set the relay for a replica protection. It is true that the relay will monitor thermally what is occurring within the machine as long as there are only normal to unfavourable operating conditions. But this is not so, when a fault condition occurs. It is possible that on a fault the temperature rise is not consistent with the assumed thermal replica due to high time constants. For instance, for a fault of a few seconds the temperature rise of the whole machine will almost be negligible (equation (3.2)). This would delay the trip, whereas the heat may be localized and very high at the affected parts and may escape undetected as well as electrodynamic forces, which may also cause damage to the machine. Similarly, on a single phasing, monitoring of the stator temperature alone is not sufficient, as the rotor would heat up much faster (in *Y*-connected stators) due to double-frequency eddy current heating and less weight compared to the stator. Similarly, it may take much longer to trip under a stalled condition. A severe unbalance, as may be caused by an internal fault, may also result in heavy negative phase sequence rotor currents and require protection similar to short-circuit protection. A short-circuit protection will not detect a single phasing. Hence the necessity to provide separate protection for different operating and fault conditions to achieve optimum utilization of the machine, with the least risk of damage. The relay must discriminate between an unfavourable operating condition and a fault condition. While the former may permit a delay tripping, the latter will need a more discrete and quick tripping to save the machine from more severe damage.

Underload protection

It is also possible to provide this protection in such relays. This will provide very vital system process information. A sudden drop in load may be the result of a fallout of the load due to disengagement of the coupling, breakage of a belt or a tool, etc. It can therefore help monitor the system process line more accurately.

12.6 Summary of total motor protection

In view of the effect of various unfavourable operating conditions on a motor's performance, one should be meticulous when selecting the most appropriate protection to safeguard a motor under the most unfavourable operating conditions. See also Section 3.6 where we have provided a brief procedure to reproduce the motor thermal curves θ versus I and vice versa, for the relay to provide a replica protection to a motor and to have closer settings of its various protective features. The following is a brief summary of our discussions so far.

As discussed in Section 12.2 and explained in Figure 12.3, an ordinary overcurrent relay will detect between curves 1 and 2, as against the average heating curve 3 and is thus oversensitive to insignificant amounts of unbalance, not actually causing harm to the motor. For instance, an unbalance in voltage of, say, 3% may cause an unbalance in the current (i.e. an apparent overloading) of, say, 18% in one particular phase and may be detected by an ordinary bi-metallic thermal overload relay, while the stator does not heat up accordingly. Even the rotor, which is more sensitive to an unbalance is heated corresponding to a current of $\sqrt{I_r^2 + 3(0.18 I_r)^2}$ or $1.047 I_r$, i.e. an overloading of nearly 5%. Similarly, during single phasing the relay should be able to detect twice the full load current in a star-connected winding, or as shown in curve *X* of Figure12.10, for a delta-connected winding, and not corresponding to the stator current of $\sqrt{3} \cdot I_r$ for a star-connected winding and curve *R*/*Y* of Figure 12.10, for a delta-connected winding. An ordinary relay will take longer to operate corresponding to the line current, whereas some of the internal circuits will be subject to much higher currents during this period.

For meticulous protection, therefore, it is advisable to use a motor protection relay for large LT and all HT motors. The following motor details and working conditions are essential to know before making a proper selection of a protective scheme:

1 Type of motor – squirrel cage or slip-ring
2 Rating – kW (CMR)
3 Rated voltage and current
4 Type of starting
5 Starting current versus time characteristics
6 Locked rotor current and corresponding 'hot' thermal withstand time
7 Motor thermal withstand characteristic curves
8 Number of starts or reversals, if required, and their frequency
9 Ambient temperature and
10 Maximum fault current

Having discussed the effect of the above parameters on the motor's performance, we will now illustrate by way of an example a general case to broadly suggest a procedure that can be followed to select the protective scheme for a motor. For more detailed selection of the motor protection relay, reference may be made to the relay manufacturer.

Example 12.7
For the purpose of protection, consider the squirrel cage motor of Example 7.1 for one hot start for which this motor is suitable.

Step I: Assume the motor starting current versus time characteristics to be shown in Figure 12.32, and divide the

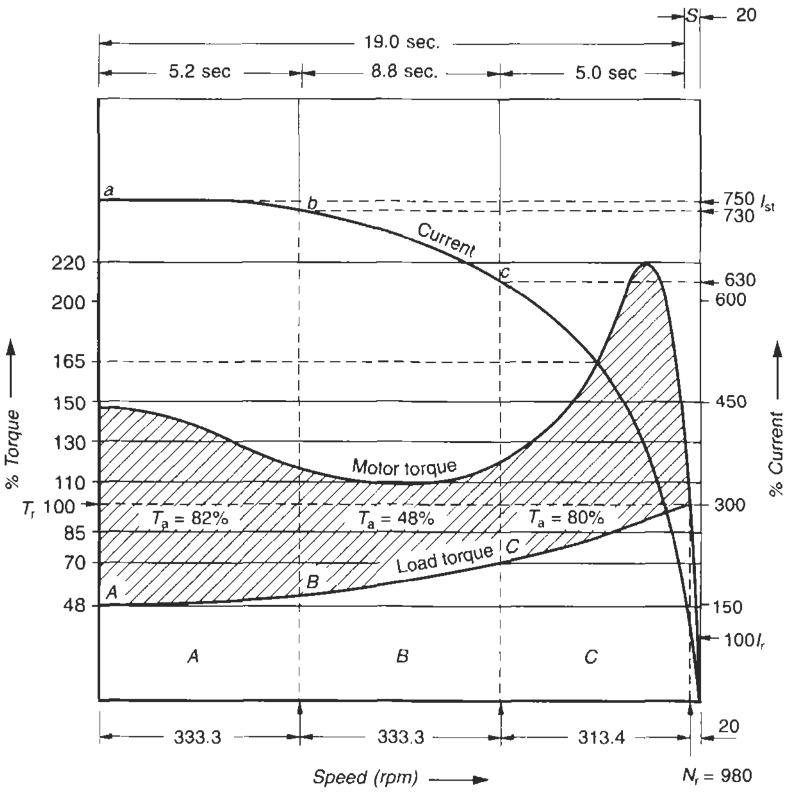

Figure 12.32 Determining the duration of starting current

accelerating torque curve into three sections, A, B and C as shown, to ascertain the magnitude of the starting current and acceleration time for the different sections.

Section A

(a) $I_a = 750\%$ of I_r

$I_b = 730\%$ of I_r

$$\therefore \quad I_{av} = \sqrt{\frac{7.5^2 + 7.3^2}{2}}$$

$= 740\%$ of I_r

(b) $T_a = 82\%$ of T_r

or $= \frac{450 \times 974}{980} \times 0.82$

$= 367$ mkg

and starting time $t_s A = \frac{1866 \times 333.3}{375 \times 367}$

$\simeq 4.52$ seconds

Assume the safe time to be 5.2 seconds (considering a safety factor of nearly 15%)

Section B

(a) $I_b = 730\%$ of I_r

$I_c = 630\%$ of I_r

$$\therefore \quad I_{av} = \sqrt{\frac{7.3^2 + 6.30^2}{2}}$$

$\simeq 682\%$ of I_r

(b) $T_a = 48\%$

or 215 mkg

and starting time $t_s B = 7.71$ seconds.
Consider the safe time as 8.8 seconds.

Section C

(a) $I_c = 630\%$ of I_r

$I_r = 100\%$ of I_r

$$\therefore \quad I_{av} = \sqrt{\frac{6.3^2 + 1^2}{2}}$$

$= 450\%$ of I_r

(b) $T_a = 80\%$ or

$= 358$ mkg.

and starting time $t_s C = 4.36$ seconds.
Consider the safe time as 5.0 seconds.
Plot the starting current and thermal curve of the motor as in Figure 12.33.
Considering $\eta = 94\%$ and p.f. = 0.85, then

$$I_r = \frac{450}{\sqrt{3} \times 2.64 \times 0.85 \times 0.94} \text{ Amp. (Max.) at 80\% of 3.3 kV}$$

$= 123.2$ A

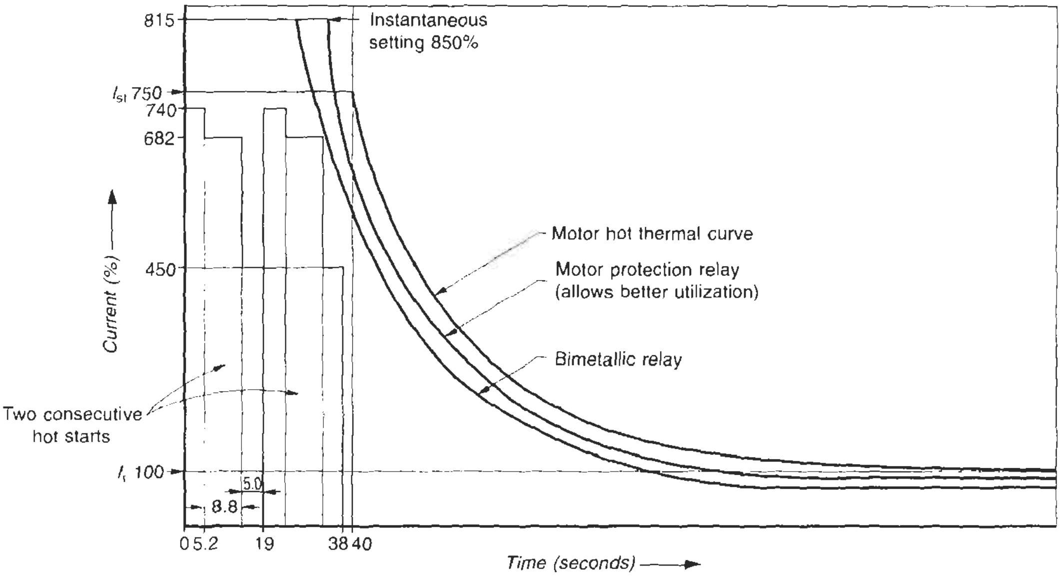

Figure 12.33 Plotting of starting current and thermal curves

Use a CT of ratio 150/1A.

Note If a power capacitor is connected after the relay, say across the motor terminals, to improve the p.f. of the machine, then only the corrected value of the current must be used. For example, if a capacitor bank of 130 kVAr is used for an individual correction of the machine then

$$I_c = \frac{130}{\sqrt{3} \times 2.64}$$

$$= 28.43 \text{ A}$$

where, I_c = capacitor current

Since I_r at 0.85 p.f. = 123.2 A

$\therefore$ I_r (active) = 123.2 × 0.85

= 104.72 A

and I_r (reactive) = 123.2 × 0.527

= 64.9 A

$\therefore$ Net reactive current = 64.9 − 28.43

= 36.47 A

and I_r (corrected) that the relay will detect

$$= \sqrt{(104.72^2 + 36.47^2)}$$

$$= 110.9 \text{ A}$$

All further calculations must be based on this current.

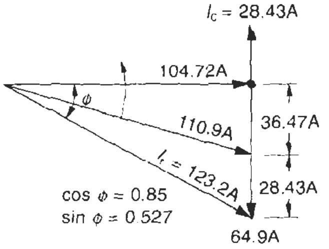

Step II: Selection of HRC fuses

I_r = 123.2 A

I_{st} = 750% of I_r

i.e. 924 A

t_s = 19.0 seconds

Consider four equally spread starts/hour. From the selection chart in Figure 12.34, select the characteristics *B–B* and determine the fuse rating as 350 A on the ordinate corresponding to a starting current of 924 A on the abscissa.

Step III: Selection of bimetallic overcurrent relay
Consider the available setting range as

(a) Overcurrent: 80–125%
(b) Instantaneous unit: 800–1400%

The thermal curve of the motor does not show any significant overload capacity and therefore the relay must be set as close to the full-load current as possible, say at a setting of 110%. Then

$$\text{Overcurrent relay tapping} = \frac{1.1 \times 123.2}{1.05 \times 150} \quad \text{(relay rating: 1 A)}$$

$$= 86\% \text{ of } 1 \text{ A}$$

Note The factor 1.05 (typical) is the pick-up current of the relay.

Say the relay is set at 85%. Then it will operate at 85/86 × 110, i.e. at 108.7% of I_r, which should be appropriate and the instantaneous setting

$$= 1.087 \times 750 = 815.25\%$$

say, 815%

This setting is only a calculation. The exact thermal curves of the motor and the relay should be available to closely match their characteristics at every point. An ideal relay in this case would be one which, without tripping, will permit two consecutive hot starts, i.e. its characteristic should lie above

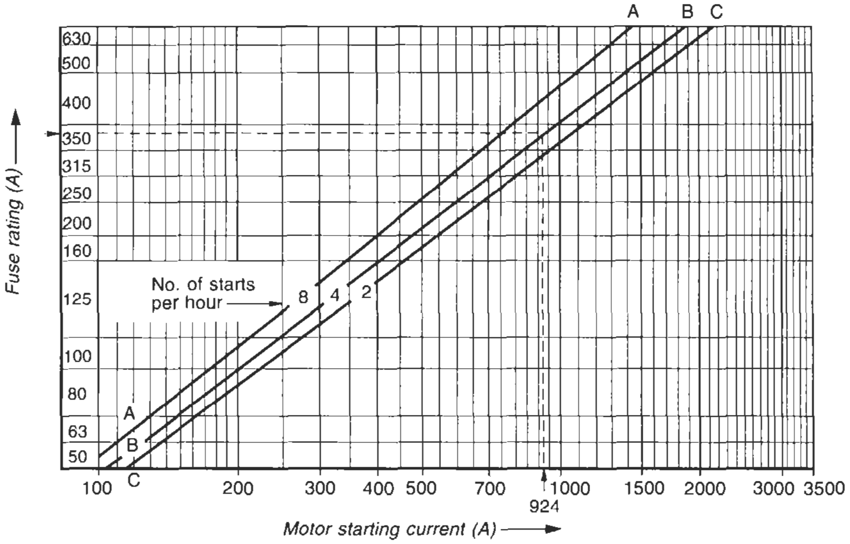

Figure 12.34 Fuse selection chart for 6.6 kV system for a motor with run-up time not exceeding 60 seconds

the motor starting curve and close below the thermal curve as shown in Figure 12.33.

Static thermal relay (discrete ICs or microprocessor based) For medium and large motors, 300 h.p. and above, this type of protective relay should be preferred to achieve optimum utilization of the motor's capacity. Consider the available setting ranges in the vicinity of

(a) Thermal overload unit: 70–130% of the CT rated current.
(b) Instantaneous (I_r) unit: 600–1200% of the thermal unit setting.
(c) Instantaneous (I_u) unit: 200–600% of the thermal unit setting.
(d) Ground fault (I_o) unit: 20% of the rated current
(e) Stalling protection unit: 150–600% of the CT rated current, 2.5–25 seconds

Settings

(i) The overload unit setting: as worked out above, at 85 A, i.e. for 108.7% of I_r.
(ii) An instantaneous setting of 750% of the relay setting should be appropriate, which can protect currents exceeding

$$7.5 \times 1.087 \times 123.2 \text{ A}$$

or 1004 A

(iii) Unbalanced setting. If set at 100%, can operate unbalanced currents to the extent of

$$110^2 = 100^2 + 6\, I_u^2 \text{ (from equation (12.6))}$$

$$\text{or } I_u = \sqrt{\frac{110^2 - 100^2}{6}}$$

$$= 18.7\%, \text{ i.e. a voltage unbalance of nearly 3\%}$$

(iv) Stalling protection unit setting. The current unit is to be set at 200–300%, and the time delay unit a little above the starting time but less than the safe withstand stall time.
(v) Single-phasing setting. If set at 100%, can operate single-phasing currents to the extent of

$$110^2 = I_u^2 + 6 I_u^2$$

$$\text{or } \quad I_u \simeq 41.58\%$$

Note: The above exercise is merely an approach to the selection of the most appropriate relay and its protective settings for a particular machine. The exact selection of the relay and its setting will depend upon the type of relay, its sensitivity and protective features supplied.

12.7 Motor protection by thermistors

A thermistor is a thermally sensitive, semiconductor solid-state device, which can only sense and not monitor (cannot read) the temperature of a sensitive part of equipment where it is located. It can operate precisely and consistently at the preset value. The response time is low and is of the order of 5–10 seconds. Since it is only a temperature sensor, it does not indicate the temperature of the windings or where it is located but only its preset condition.

This is a later introduction in the sensing of temperature compared to the more conventional types of temperature devices available in an embedded temperature detector (ETD), such as a thermocouple or a resistance temperature detector (RTD) described below. Thermistors can be one of the following types:

(i) NTC – having a negative temperature coefficient, and
(ii) PTC – having a positive temperature coefficient.

The resistance–temperature characteristics of both these types are shown in Figures 12.35 and 12.36. One can

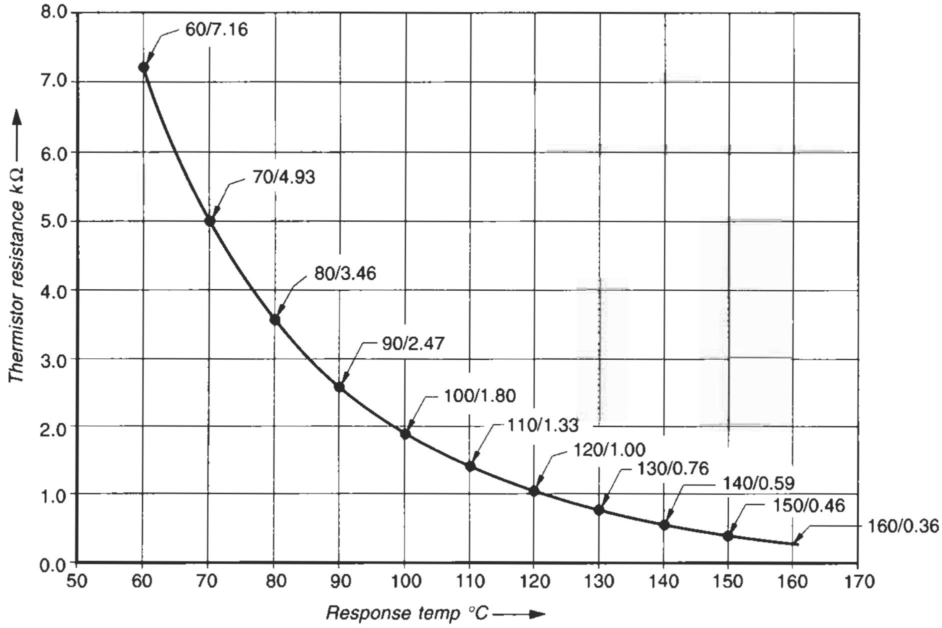

Figure 12.35 Characteristic of an NTC thermistor

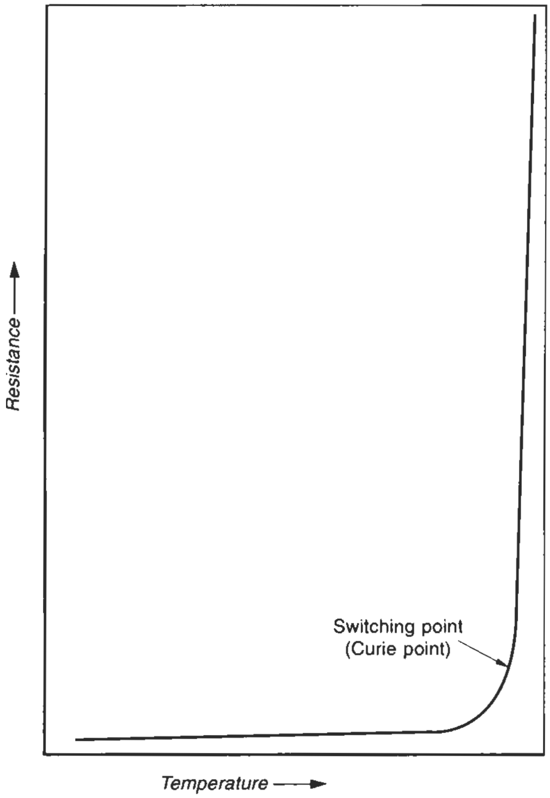

Figure 12.36 Characteristic of a PTC thermistor

note an exponential variation in case of an NTC thermistor. Thermistor resistance decreases with an increase in temperature whereas in a PTC thermistor the resistance remains constant up to a critical temperature and then undergoes a very steep and instantaneous change at a predefined temperature, known as the Curie point. It is this feature of a sudden change in the resistance of a PTC thermistor that makes it suitable for detecting and forecasting the motor's winding temperature at the most vulnerable hot spots when embedded in the windings. However, they can be installed only in the stator windings, as it is not possible to pick up the rotor signals when provided on the rotor side. Also to take out leads from the rotor circuit would mean providing slip-rings on the rotor shaft, which is not recommended.

The resistance values of a PTC thermistor are given as:

(a) The resistance values in the range of –20°C to (T_p-20)°C should not exceed 250 Ω, with all values of the measuring d.c. voltages up to 2.5 V.
(b) At $(T_p - 5)$°C – not more than 550 Ω with a d.c. voltage of not more than 2.5 V.
(c) At $(T_p + 5)$°C – not less than 1330 Ω with a d.c. voltage of not more than 2.5 V.
(d) At $(T_p + 15)$°C – not less than 4000 Ω with a d.c. voltage of not more than 7.5 V.

where T_p is the tripping reference temperature or Curie point as indicated in Table 12.1.

A typical characteristic curve of a PTC thermistor having a Curie point of 120°C is shown in Figure 12.37.

Table 12.1 Curie points for a few PTC thermistors

	Winding temperature (°C)		
Insulation class ⟶	*E*	*B*	*F*
Temperature reference			
Steady overload condition	155	165	190
Stalled condition	215	225	250
	Recommended reference temperature (Curie point) for thermistors (°C)		
Drop-off (tripping) T_p	130	140	160
Warning T_p	110	120	140

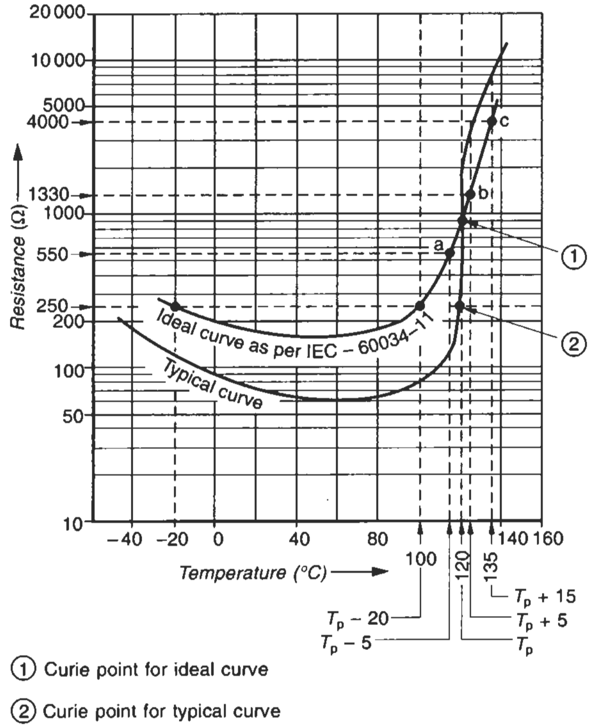

Figure 12.37 Typical characteristics of a PTC thermistor

The current through the thermistor circuit reduces drastically and instantly as soon as the critical temperature is attained as the resistance rises manifold. This feature is utilized to actuate the protective relay used in the tripping circuit, to protect the motor from overheating. Figure 12.38, illustrates a typical PTC thermistor protective circuit. It is this feature that has made PTC thermistors more useful and adaptable universally, compared to the NTC type. It is interesting to note that in a PTC thermistor, the switching point at which the resistance rises suddenly can be adjusted, and the device can be designed for any temperature to suit a particular application or class of insulation. They are normally available in the range of 110, 120, 130, 140 and 150°C and can withstand a temperature up to 200°C, such as required during impregnation and curing of the stator windings. Depending upon the reference temperature (Curie point), the thermistors may be made of oxides of cobalt, manganese, nickel, barium and titanium. For motor protection, they are chosen according to the class of insulation used in the winding. For example, for a class E motor the switching point can be chosen at 120°C and for class B at 130°C (refer to Table 9.1). These are tripping temperatures. For a pre-warning by an alarm or annunciation they can be set at a slightly lower temperature so that an audible or visual indication is available before the motor trips to give an opportunity to the operator to modify the operating conditions, if possible, to save an avoidable trip.

Since the thermistor circuit will trip the protective circuit as soon as the thermistor current reduces drastically, it provides an inherent feature to trip the protective circuit even when the thermistor circuit becomes damaged or open-circuited accidentally, extending a feature of 'fail to safety'.

A thermistor is very small and can be easily placed inside the stator overhangs, bearings or similar locations, wherever a control over the critical temperature is desired. It is not provided in the rotor circuit (particularly squirrel cage rotors), as noted earlier. This device is embedded in the windings before impregnation, for obvious reasons. For exact temperature monitoring, the thermistor is always kept in contact with the winding wire. The number of thermistors will depend upon the number of stator windings and the specific requirement of warning or tripping or both. Likely locations where a thermistor can be placed in a motor are illustrated in Figure 12.39(a).

Such a device can actually predict the heating-up conditions of a motor winding, at their most vulnerable locations. It does not only provide total motor protection but also ensure its optimum capacity utilization. The conventional methods of a motor's protection through an overload relay, a single-phasing preventor, a reverse power relay or negative sequence voltage protection all detect the likely heating-up conditions of the motor windings under actual operating conditions, whereas a thermistor can sense the actual winding heating-up condition. A thermistor may prove highly advantageous for the protection of motors that are operating on a power system that contains many harmonics, and the actual heating of the motor windings may be more than the apparent heating, due to distortions in the sinusoidal waveform (Section 23.8). A thermistor detects this situation easily by sensing the actual heat. It is therefore, possible to employ such a single device for motor protection to make protection simple, compact, much more economical and even more accurate. It also extends an opportunity to an optimum utilization of the motor's capacity. The only likely shortcoming to the operator or the working personnel is the total absence of an indication of the actual fault or the unfavourable operating conditions. The cause of a trip is now only guesswork, which is not desirable, and hence the necessity for an elaborate protective scheme, discussed above. But thermistors are very useful for predicting unexpected hot spots in a motor during actual running, which other devices may not be able to do. They are therefore employed extensively in

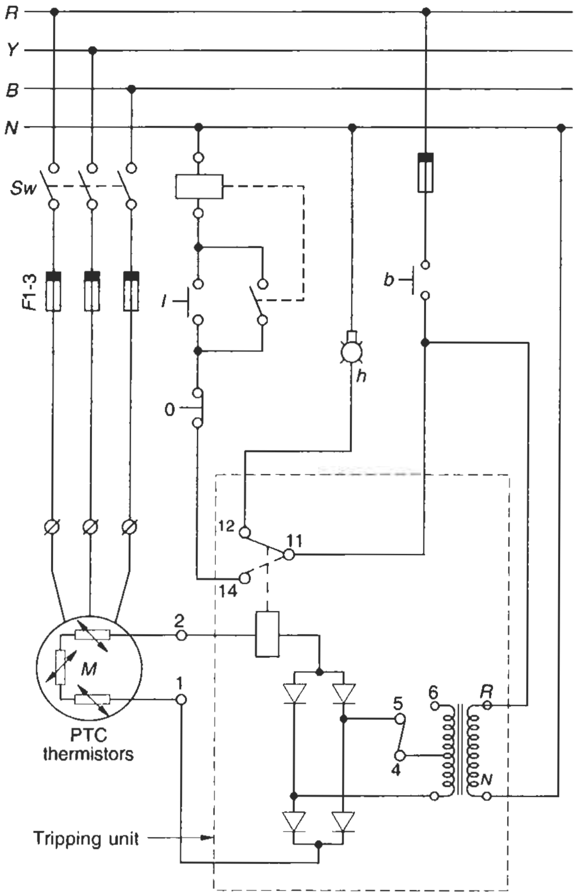

Figure 12.38 A PTC thermistor protective circuit

large and critical motors as temperature sensors. They are also being used as thermistor relays to trip a motor by converting the resistance change into a current change of the control circuit. Figure 12.40 shows such a relay.

12.7.1 Embedded temperature detectors (ETDs)

They are basically temperature monitoring devices and can indicate the temperature on a temperature scale. They may be one of the following types.

Thermocouples

These are bimetal elements, consisting of a bimetal junction which produces a small voltage proportional to the temperature at the junction. They are thus able to detect the winding temperature conditions when embedded inside the motor windings. For more details refer to DIN 43710.

Resistance temperature detectors (RTDs)

These are normally of pure platinum wound on a ceramic or glass former and encapsulated in a ceramic or glass shell, having an operating range of –250°C to +750°C, with an accuracy of less than 1°C and a response time of the order of 0.2 second. Pure metals possess almost a linear temperature coefficient of resistance ρ, over a wide range and this characteristic is used in monitoring the temperature of a particular object. In pure platinum

$$R_t = R_0(1 + \rho\theta)\ \Omega$$

where R_t = resistance at temperature θ°C
R_0 = resistance at 0°C = 100 Ω
θ = end temperature °C
$\rho = 3.85 \times 10^{-3}$ per °C at 0–100°C

The exact resistance variations of a $P_t - 100$, RTD over a range of temperatures are given in Table 12.2, and not very different from those calculated by the above equation and drawn in Figure 12.41.

Application

All the above sensing and monitoring devices are basically supplements to overload and single-phasing protection. They are worthwhile for critical installations that require more accurate sensing or monitoring of the operating temperatures of the different vital components or likely hot spots. They also eliminate any chance of tripping for all operating conditions that can be controlled externally. A few applications may be speed variation, affecting cooling at lower speeds, frequently varying loads, frequent starts, stops, plugging and reversals etc. In all these cases, the other protections may not detect the heating conditions of the vital components of a machine as accurately as a temperature detector.

12.8 Monitoring of a motor's actual operating conditions

To warn of an unfavourable operating condition by the use of an audio-visual alarm or trip or both, schemes can be introduced in the control circuit by means of a temperature detector or other devices to monitor any or all of the following internal conditions of a motor:

- Motor winding temperature
- Motor or driven equipment bearing temperature
- Coolant circuit inlet water pressure and temperature
- Moisture condensation in the windings
- Motor speed
- Vibration level
- Safe stall time
- Rotor temperature
- Any other similar condition, interlocking with other feeders or sequential controls etc.

To detect the above, sensing and monitoring devices can be installed in the motor. Some of these are built-in during the manufacturing stage and others are fitted at site during installation.

Several types of sensing and monitoring devices are available that are embedded at a motor's vulnerable locations and the hot spots at the manufacturing stage

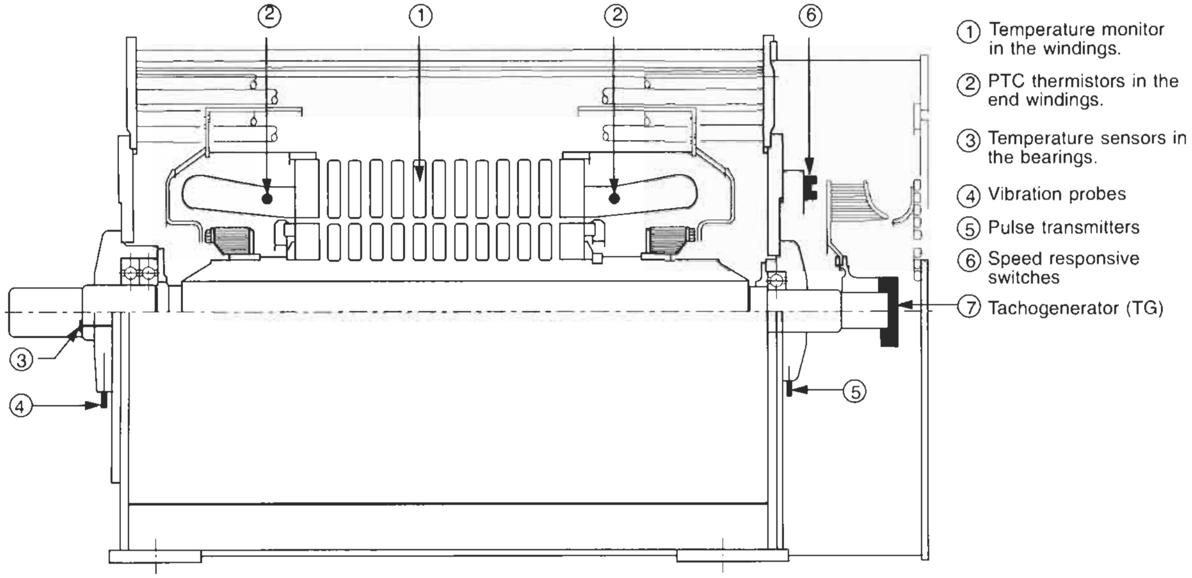

Figure 12.39(a) General safety devices and their locations in a motor

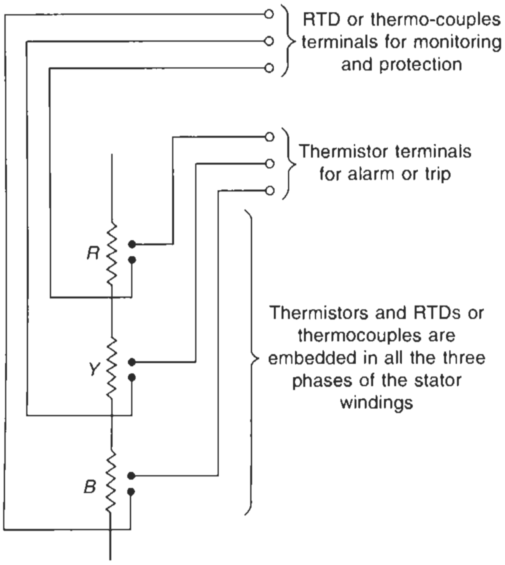

Figure 12.39(b) Wiring diagram

and final assembly of the motor by the motor manufacturer. All these accessories are normally optional and must be requisitioned to the motor manufacturer at the time of the initial indent. These devices can be of the following types.

Figure 12.40 Thermistor motor protection relay (Courtesy: L&T)

12.8.1 Motor winding temperature detection (by PTC thermistors and RTDs)

HT motors specifically, and large LT motors generally, are recommended to have six such detectors, two in each phase to sense or monitor the temperature of likely hot spots and provide an audio-visual alarm, annunciation and protection signals. For a stator winding, the preferred locations for a PTC thermistor and an RTD may be considered as below:

Table 12.2 Characteristics of a P_t – 100 RTD

Temperature θ°C	*Resistance* Ω
0	100
50	119.40
100	138.50
110	142.28
115	144.18
120	146.06
125	147.94
130	149.82
135	151.70
140	153.57
145	155.45
150	157.32

Source IEC 60751

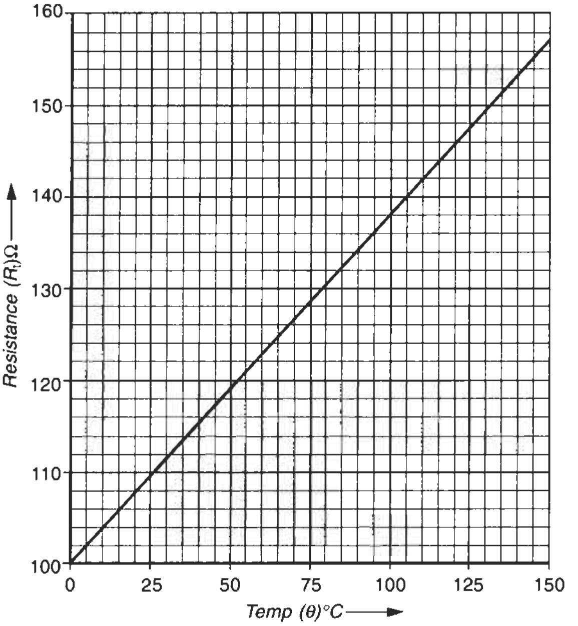

Figure 12.41 Characteristic of a P_t – 100 resistance temperature detector (RTD)

- *PTC thermistors* These are fragile and require usable space in the slots. They are normally fitted in the overhangs of the stator windings, as shown in Figure 12.39(a). A sudden problem with the motor, causing overheating, is instantly detected by an audio-visual alarm or a trip. They are preferred for smaller motors. For larger motors, protection through monitoring is preferred to sensing only. Monitoring is possible through RTDs or thermocouples.
- *RTDs or thermocouples* These are normally embedded in the stator windings as illustrated in Figures 12.42 and 12.39(a). The winding temperature can now be monitored continually and a temperature replica of the machine obtained at any time. Figure 12.39(b) shows their simple wiring. They are generally preferred to thermistors for large LT and all HT motors.

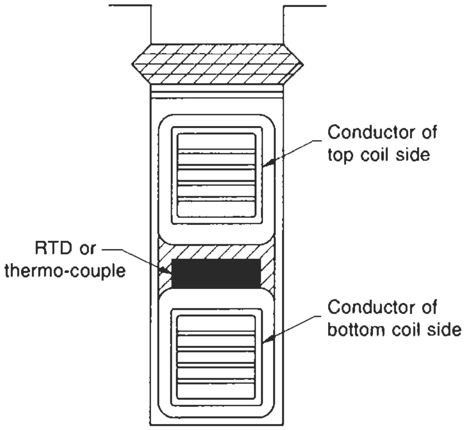

Figure 12.42 Location of a RTD or thermo-couple in a motor winding

12.8.2 Bearing temperature detection (by PTC thermistors or RTDs)

Motors are also recommended to have one bearing temperature detector in each bearing. This can be fitted within the threaded walls of the bearing that reach up to the bottom of the bearing shell, i.e. close to where the heat is produced. Each detector may have two sets of contacts, each having '2-NO' contacts, rated for 5 A at 240 V a.c. and 0.5 A at 220 V d.c. One set can be set at a lower value to provide an audio-visual alarm and the other at a higher value to trip the motor.

12.8.3 Coolant circuit water pressure and temperature (moisture) detection

Water-Cooled motors, type CACW (cooling type ICW 37 A 81 or ICW 37A 91) (Section 1.16, Table 1.12) should be fitted with moisture detectors to provide an audio-visual alarm in the event of a leakage in the water circuit or a higher coolant temperature.

12.8.4 Detection of moisture condensation in the windings (by space heaters)

Motors generally above 37.5 kW located in a humid atmosphere or required to be stored idle for long periods may be provided with one or two and even more space heaters, depending upon the size of the motor, suitable for 240 V, 1-ϕ a.c. supply, to maintain the motor's internal temperature slightly above the dew point to prevent moisture condensation or deterioration of the insulation during a shutdown. The heaters are located inside the motor at the lower end of the stator so that they are easily accessible and their removal and replacement presents no problem. The rating of total heating power may vary from about 100 watts to 3500 watts, depending upon the size of the motor. For motors up to 400 kW, one or two space heaters, totalling about 100–250 watts, may be adequate, whereas, for a 10 000 kW motor there may be as many as four to six space heaters, totalling about 3500 watts.

12.8.5 Vibration probes

These may be used to detect the hunting of the machine and to provide an audio-visual alarm for unusual running or for vibrations.

12.8.6 Use of speed switch or tachogenerator

This is a speed-sensitive device and is employed to monitor the starting time, t_s, in normal motors or the heating-up time, t_E, in increased-safety motors (Section 7.13.2). This is installed to detect a stalling condition for critical installations where a false tripping due to an overprotection or a malfunction of the locked rotor protection relay is not desirable, or where the starting time, t_s, may exceed the heating-up time, t_E. The speed may be set at about 10–30% of N_r, depending upon the speed–torque curves of the motor and the load. The purpose is to detect a speed, N_a (Figure 12.6), where a locked rotor condition may occur during a normal speed-up period. This situation may arise due to a voltage fluctuation, a sudden excessive torque or a load demand, etc. At the preset speed, the switch contacts open to energize a timer. If the motor is not able to pick up within the motor thermal withstand time, the timer will operate and actuate the tripping circuit in conjunction with the locked rotor protection. When a motor is statically controlled, this device is used for speed correction through the feedback control system (Section 6.6).

All these devices and their likely locations are indicated in Figure 12.39(a). The sizes of control cables to connect these devices are indicated in Table 12.3.

Table 12.3 Recommended sizes of cables for various sensing and monitoring devices

(A)	*LT motors*	*Number of cables and sizes*
(i)	PTC, thermistors or embedded resistance temperature detectors (RTDs): for 6 sets of copper conductor cables (2 cores for each set)	12 × 2.5 mm², 650/1100 V
(ii)	PTC, thermistors or resistance bearing temperature detectors (RTDs): for 2 sets	4 × 2.5 mm², 650/1100 V
(iii)	Moisture detectors: For each detector	2 × 2.5 mm², 650/1100 V
(iv)	Space heaters: For each space heater	2 × 2.5 mm², 650/1100 V
(v)	Speed switch: For each switch	2 × 2.5 mm², 650/1100 V
(B)	*HT motors* Generally the same as for LT motors, except that the recommended size of cables will be 6 mm²	

Note Wherever a cable lead connecting the above devices (such as for RTDs) has to pass through a magnetic field, it may be screened with tinned copper-braided wires to nullify the effect of stray fields. The field may distort the readings.

12.9 Switchgears for motor protection

12.9.1 LT motors

The general arrangement of a motor's protection switchgear (MCC*) is shown in Figure 12.43(b). This takes into account the protection of the main equipment such as motors and cables and makes provision for isolation of the outgoing circuits from the incoming supply. The single line diagram for this switchgear is shown in Figure 12.43(a). The overcurrent relays are selected, as far as possible, with thermal characteristics to those of the motors. The overload setting should preferably be within 25–75% of the relay range.

For small motors with a number of brands and varying thermal characteristics the above may not be practical. Moreover, to arrange the thermal curves for each relay and motor and then match them individually for closer protection may also not be practical. The practice adopted universally, therefore, is to select the most appropriate relay, within the required range, from among the ranges and brands available in the market for different ratings of motors. Table 12.4 suggests the recommended relay ranges, sizes of switches, fuses and cables for different sizes of motors. This selection is only for general, guidance. For a more detailed approach, refer to the notes to the table.

12.9.2 HT motors

With the availability of 3.3 and 6.6 kV vacuum contactors the control of HT motors up to 6.6 kV systems has now become easier and economical, compact and even more reliable. For 11 kV systems, vacuum as well as SF_6 (Sulphur hèxafluoride) breakers can be used. The HT motor's switching and protection through a vacuum contactor provides a replica of an LT system. The earlier practice of using an HT OCB, MOCB, or an air blast circuit breaker for the interruption of an HT circuit is now a concept of the past.

The two comparatively new type of breakers, vacuum and SF_6 are exceptions and have gained favour in view of their reliability and durability. For details on these breakers, see Sections 19.5.5 and 19.5.6, which also deal with their switching behaviour and phenomenon of arc reignition. Figures 12.44 and 12.45 illustrate typical power and control circuit diagrams respectively, for a 6.6 kV breaker-operated motor starter.

The latest practice for up to 6.6 kV motors is to use an HT load break, fault-making isolator in conjunction with the appropriate type and size of HRC fuses, a vacuum contactor and a motor protection relay. The contactors

---

* MCC – motor control centre. For details refer to Chapter 13.

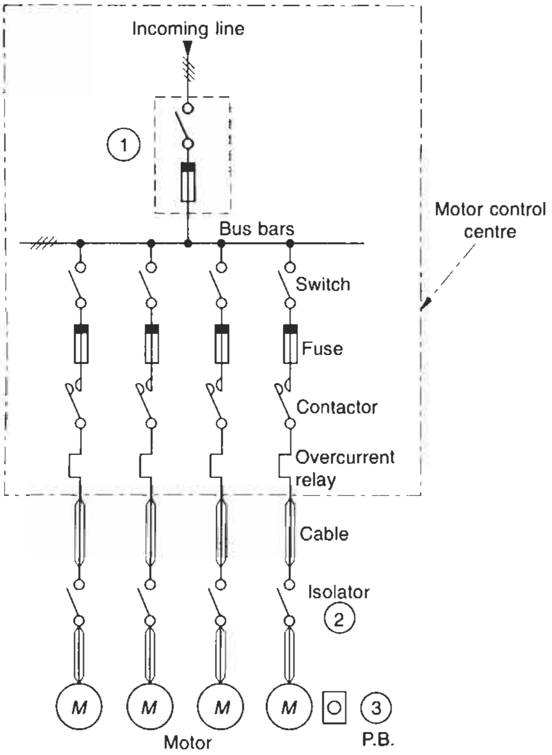

Note

1. Switch-fuse unit or a circuit breaker.
2. Isolator near the motor is also recommended, when the motor is away or not visible from the switching station (it is a safety requirement)
3. A stay put type stop push button may also be mounted near the motor for maintenance safety

Figure 12.43(a) Power line diagram of an MCC

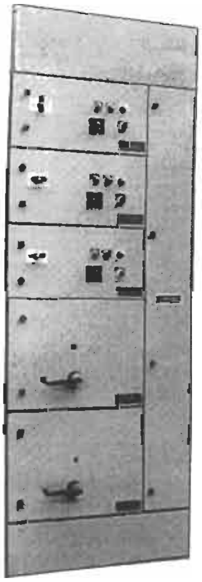

Figure 12.43(b) MCC for single line diagram of Figure 12.43(a)

also provide a three-phase simultaneous make and break of contacts through their 'no volt' coil. Figures 12.46 and 12.47 illustrate typical power and control circuit diagrams, respectively, for a 6.6 kV vacuum contactor-operated motor starter.

HT isolators

The isolator should be a load-break and fault-make type of switching device. Normally, it is provided with an integral grounding switch, such that in the isolated position it will automatically short-circuit and ground all the three-phases of the outgoing links. This is a basic safety requirement for a gang-operated isolator, mounted on outdoor poles and operated manually from the ground by a disconnecting lever. For an indoor switchgear,

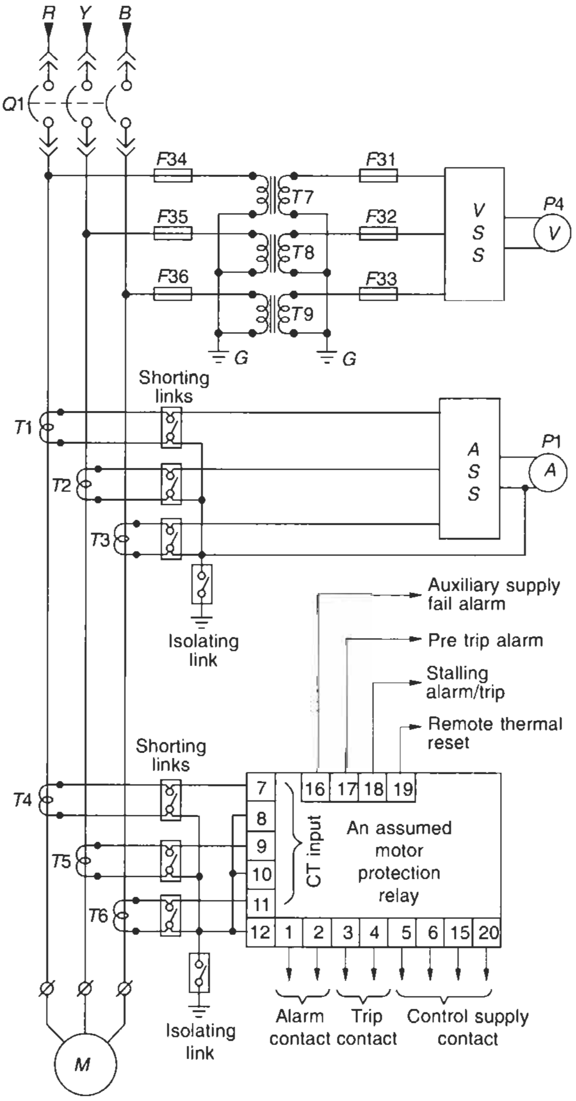

Figure 12.44 A simple power circuit diagram for a breaker-operated HT motor starter

Table 12.4 Selection table for switches, fuses, relays and cables for different sizes of LT motors

kW	HP	Approx. FLC at 415 V (I_r)	$I_r/\sqrt{3}$	Switch rating		HRC fuses for backup protection		Over current relay range**		Size of Al conductor cables		
				For DOL	For Y/Δ	For DOL	For Y/Δ	For DOL	For Y/Δ	For DOL	For Y/Δ	
											Before the starter	After the starter
		A	A	A	A	A	A	A	A	mm^2	mm^2	mm^2
0.18	0.25	0.7	0.45	16	16	4	–	0.5–1/0.6–1	–	1.5	–	–
0.25	0.33	0.9	0.52	16	16	4	–	0.5–1/0.6–1	–	1.5	–	–
0.37	0.5	1.1	0.64	16	16	4	–	1–2/1–1.6	–	1.5	–	–
0.55	0.75	1.5	0.87	16	16	6	–	1–2/1.5–2.5	–	1.5	–	–
0.75	1.0	2.0	1.15	16	16	6	–	1–2/1.5–2.5	–	1.5	–	–
1.1	1.5	2.6	1.50	16	16	6	–	1–5–3/2.5–4	–	1.5	–	–
1.5	2	3.7	2.14	16	16	10	–	2–4/2.5–4	–	1.5	–	–
2.2	3	4.9	2.84	16	16	16	6	3–6/4–6.5	1.5–3/2.5–4	1.5	1.5	1.5
3.7	5	7.8	4.50	16	16	16	10	6–12/6–10	3–6/4–6.5	1.5	1.5	1.5
5.5	7.5	11.3	6.50	25	16	25	16	6–12/9–14	4–8/6–10	2.5	1.5	1.5
7.5	10	15.5	8.95	25	25	25	25	10–16/13–21	6–12/6–10	4	2.5	1.5
9.3	12.5	19.0	11.00	63	25	35	25	12–24/13–21	6–12/9–14	6	4	2.5
11	15	22.0	12.70	63	25	50	25	12–24/20–32	6–12/9–14	6	4	2.5
15	20	29	16.80	63	63	63	35	16–32/20–32	12–24/13–21	10	6	4
18.5	25	35	20.20	63	63	63	50	24–45/28–42	12–24/20–32	16	10	6
22	30	40	23.20	63	63	63	50	24–45/30–45	16–32/20–32	16	16	6
30	40	54	31.20	100	63	100	63	32–63/45–70	24–45/28–42	25	25	10
37	50	66	38.20	125	100	125	80	50–90/60–100	24–45/28–42	35	25	16
45	60	80	46.20	250	100	160	100	50–90/60–100	32–63/45–70	50	35	25
55	75	100	57.70	250	250	200	125	70–110/90–150	32–63/45–70	70	70	25
75	100	133	76.80	250	250	250	160	90–135/90–150	50–90/60–100	95	95	50
90	125	165	95.50	250	250	250	200	140–170/120–200	70–110/90–150	150	150	70
110	150	196	113.00	400	250	355	200	180–300	90–135/90–150	185	185	95
125	170	220	127.00	400	250	400	250	180–300	120–155/90–150	240	240	120
160	220	285	165.00	630	400	500	320	200–400	120–200	400	400	150
180	245	315	182.00	630	400	500	320	280–400	120–200	400	400	185
200	270	350	205.00	630	400	630	355	280–400	180–300	2 × 185	2 × 185	240
220	300	385	222.00	630	400	630	400	350–500	180–300	2 × 240	2 × 240	240

*The recommended ratings are for general guidance only. For more accurate selection of fuses, it is advisable to check these ratings by comparing their $I^2 - t$ characteristics with those of the selected OCR (see Section 12.4.1).

**The overcurrent relay range may vary slightly from one manufacturer to another.

Notes

1 It is recommended that relays beyond 100 A be CT operated for better accuracy and stability.

2 For drives with longer starting times, relays suitable for heavy-duty starting, i.e. CT operated, must be employed (Section 12.4.1).

3 In Y/Δ starting, the relay is connected in phases. Its rating is therefore considered as $I_r/\sqrt{3}$ i.e. 58% of I_r. With drives having longer start times, this relay may trip during a start. Provided that the motor thermal rating permits a current up to $2I_r$ (approx.) in the star position, for the duration of the start the OCR may be connected on the line side with a range corresponding to I_r. This is $\sqrt{3}$ times more than the range in the phases and would take nearly $(\sqrt{3})^2$, i.e. three times longer to trip than when it is used in the phases.

4 The sizes of cables considered above refer to normal operating conditions and a distance of around 10/15 metres between the starter and the motor.

5 (i) For slip-ring motors, the selection of components may be made corresponding to a Y/Δ switching.
(ii) With the short-circuiting and brush-lifting device, the cable on the rotor side, when rated for only half the rated rotor current, will be adequate, as it has to carry the current during start only.

however, it is not so essential, since the switchgear itself is adequately protected for a ground fault. Generally, all manufacturers provide such a built-in feature as standard practice, irrespective of its application. For a capacitor bank also, if installed in the circuit, such an isolating and grounding switch is essential to ground the capacitor banks on a switch-OFF. Figure 12.48 shows a typical HT isolator.

HT HRC fuses

As discussed in Section 17.7, during a start HT motors may encounter severe switching surges on the system. The starting inrush current on such a system can therefore have a momentary very high peak, similar to and even more severe than that shown in Figure 4.5, depending upon the type of interrupter being used and the surge protection scheme, if provided. Unlike LT motors, one should therefore take cognisance of the switching surge phenomenon, in addition to the thermal rating demand, to sustain the repeat start surges while selecting the fuse rating for the switching of an HT motor.

The following points may be borne in mind while selecting the correct rating of the fuses:

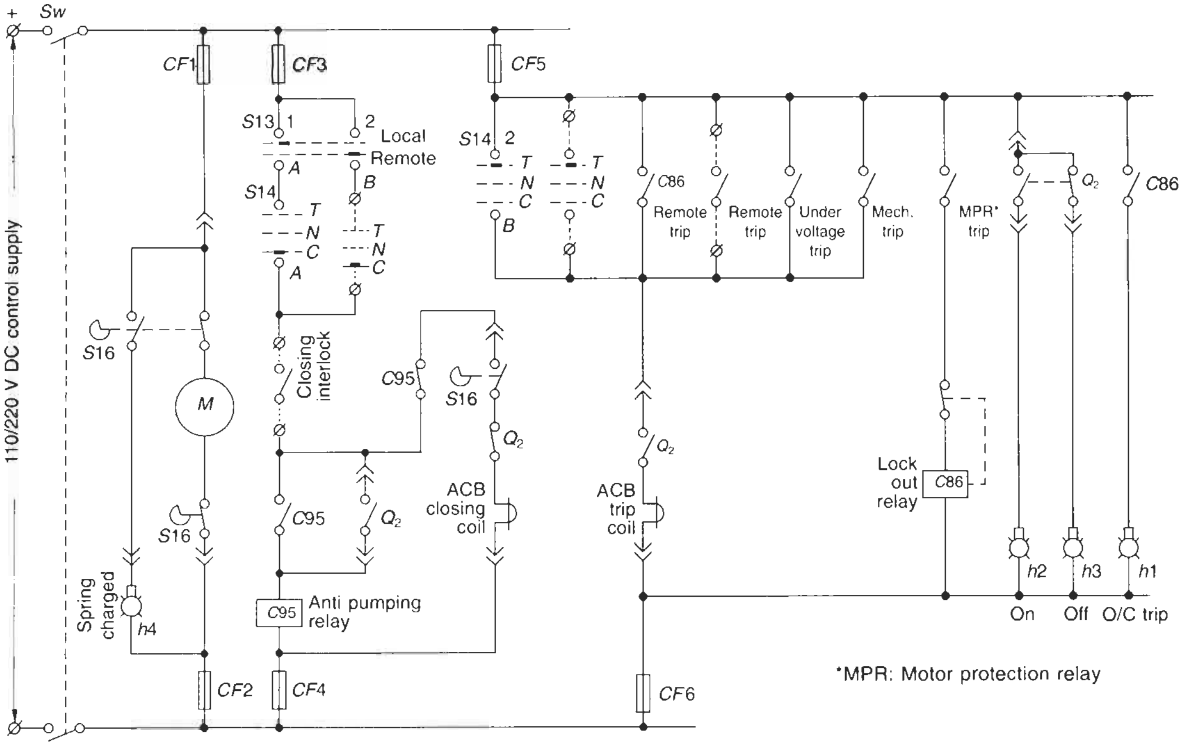

*MPR: Motor protection relay

S13

Knob position	1-A	2-B
Remote	Open	Close
Local	Close	Open

S14

Knob position	1-A	2-B
Trip	Open	Close
Neutral	Open	Close
Close	Close	Open

Figure 12.45 Typical schematic and control wiring diagram for power circuit of Figure 12.44

- Starting time of the motor
- Number of consecutive starts
- Number of equally spaced starts per hour
- Consider the rating of the fuse at about twice the rated current for a DOL starting and about 130% for an A/T starting. The rating will depend upon the $I^2 - t$ characteristics of the HRC fuses and must ensure that they remain intact while handling short-duration excessive current during normal operation, such as during a start, and clear a fault condition quickly.

Current–Time ($I^2 - t$) characteristics

The typical current–time characteristics for 50–630 A, 6.6 kV fuses are shown in Figure 12.49. The cut-off current characteristics are given in Figure 12.50.

Method of selection

The manufacturers of HRC fuses provide a selection chart to help a user to select the proper type and size of fuses. For the fuses covered in Figures 12.49 and 12.50 we have also provided a selection chart (Figure 12.51), for motors having a starting time of not more than 15 seconds. Similar charts from other manufacturers can also be obtained for different ratings of fuses and different starting times of motors.

Vacuum contactors

Normally a vacuum contactor (Figure 12.52) is preferred to an ordinary air break contactor for the following reasons:

- Since the contacts make and break in vacuum there is no oxidation of the contacts. The contacts thus do not deteriorate and provide a longer working life.
- Dielectric strength of high vacuum is approximately eight times that of air (Figure 12.53).
- The arc energy dissipated in vacuum for a given interrupting current is one tenth of that in oil (Figure 12.54).
- It calls for less maintenance.
- Very high contact life, say, over 1.5 million operations, which is more than enough for lifetime operation.
- High operating rate suitability, say 1000 or more operations per hour. This makes them suitable even

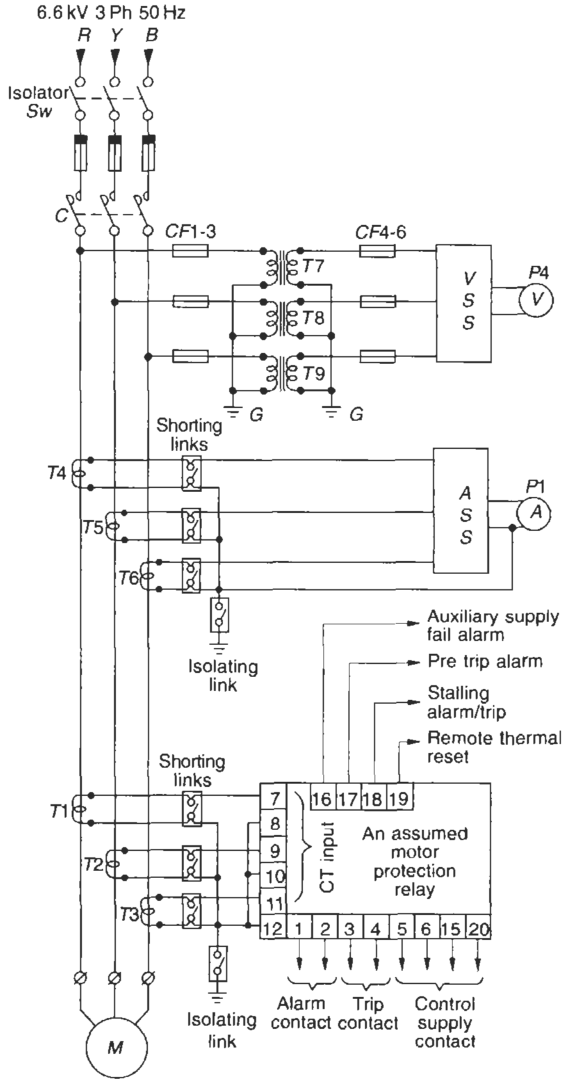

Figure 12.46 A simple power diagram for a 6.6 kV motor control with an isolator, contactor and a motor protection relay

for applications requiring frequent switchings, brakings or reversals etc., and gives them a distinct advantage over the conventional type of contactors.

For more details on vacuum interrupters see Section 19.5.6 and Table 19.1.

12.10 Selection of main components

The selection of main components such as switches and contactors is made on the basis of their

- Continuous current rating (CMR): to carry the circuit current continuously.
- Thermal capacity: to perform the required switching duties and sustain the fault conditions, at least up to the cut-off time of the short-circuit protective device, say, the HRC fuses.
- Electrical and mechanical life: which is defined by their AC duty. As in IEC 60947-4-1 for contactors and IEC 60947-3 for switches. It is noted in Table 12.5.

Note

1 The type of duty defines the capacity of a switch or a contactor by the value of the current and the p.f. of the associated circuit, it can make or break on fault. For values of currents and p.f. for different duties, refer to the relevant standards as noted above.

2 There are a few more utilization categories. For details refer to IEC 60947-4-1.

In fact, the same contactor or switch can perform different duties at different thermal ratings and have corresponding electrical* lives.

For instance, an AC3 duty contactor when performing the duty of a resistive load can carry a higher load and its normal rating can be overrated. Similarly, when performing the duty of AC4, it can carry a lower load and will require derating. Accordingly, its electrical life will also be affected. As standard practice, such ratings are prescribed by the manufacturers in their product catalogues. Based on the above and the discussions so far, we have provided in Table 12.4 the recommended ratings of switches, fuses, relays and sizes of aluminium cables for different motor ratings. These recommendations will generally provide protection consistent with coordination type 2 as in IEC 60947-4-1. From this table a quick selection of the components can be made for any rating of LT motors. For HT motors, the protection is specific and must be determined on a case-by-case basis. The components so selected and backed-up with overload and short-circuit protections will ensure that

- They will make and break, without damage, all currents falling even outside the protected zone of a thermal overcurrent relay or the built-in overcurrent (o/c) and short circuit (s/c) releases of a breaker, but within the protected region of the HRC fuses, as illustrated by the hatched portion, of the overcurrent and short-circuit, $I^2 - t$ curves (Figure 12.55).
- They will withstand the let-through energy $(I^2 \cdot t)$ and the peak let-through current of the relays/releases or the fuses, when making or breaking the circuit on fault, without damage or welding of the interrupting contacts.

The basis of selection of these components is briefly described below.

12.10.1 Switches and contactors

These are selected so that they will sustain without damage to its contacts or to any other part the motor switching

---

*Mechanical life is independent of current and does not depend on load, duty or application.

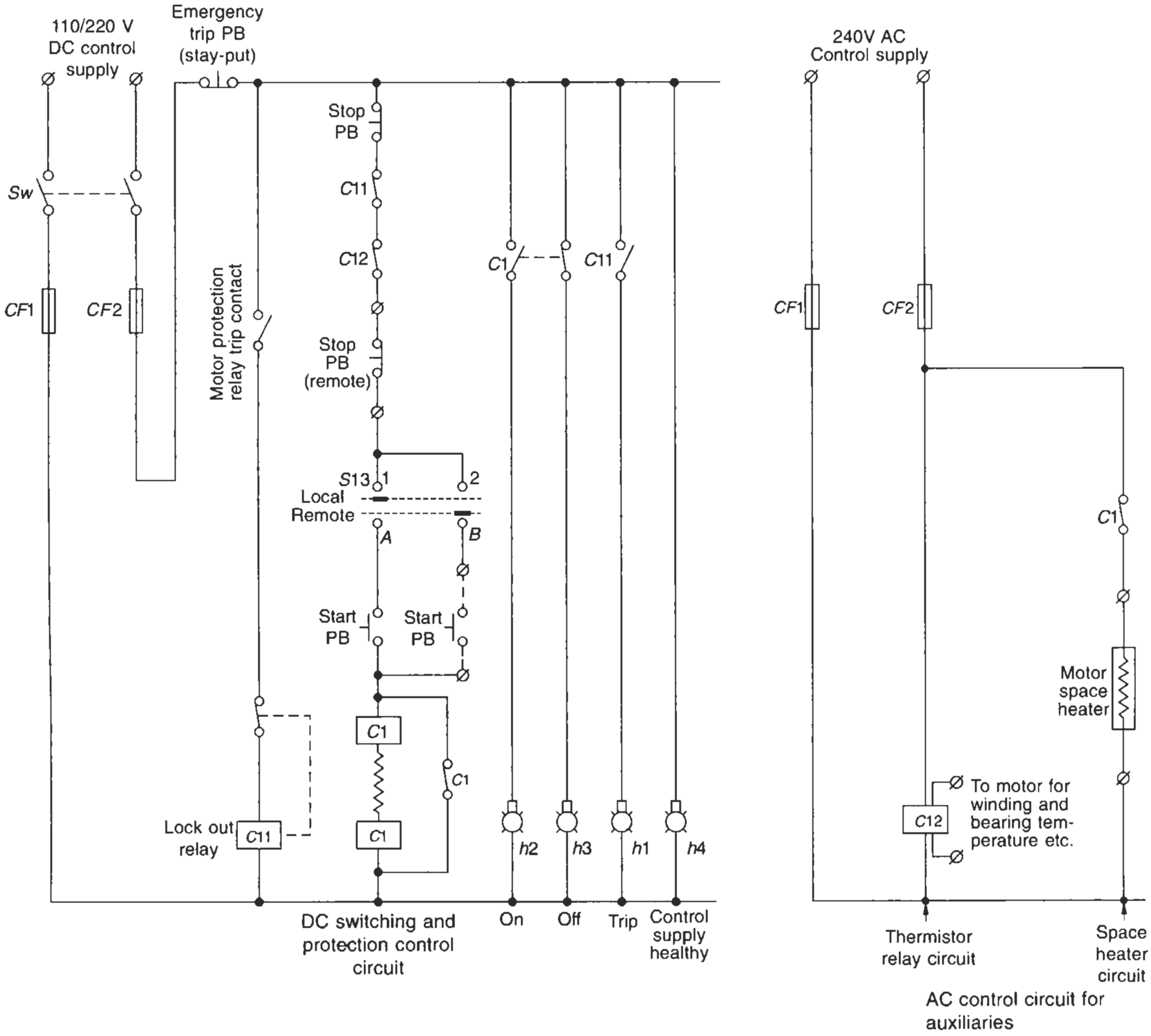

Figure 12.47 Typical schematic and control wiring diagram for power circuit of Figure 12.46

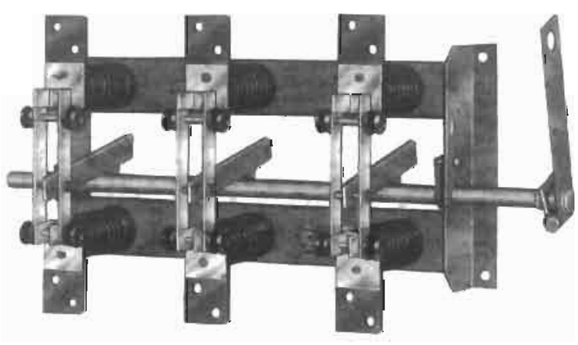

Figure 12.48 HT isolating switch (Courtesy: Siemens)

inrush current (I_{st}) and possess a thermal capacity of more than the fuse let-through energy (Figures 12.56 and 12.57).

12.10.2 Breakers (ACBs or MCCBs) (Figure 12.58)

While a fuse-free system is gradually gaining preference, for all ratings, as discussed later, it is recommended that a breaker (ACB or MCCB) be employed for large motors of at least 300 h.p. and above to ensure better protection for the motor.

12.10.3 Overcurrent relay (OCR)

It is necessary to coordinate the HRC fuses with the overcurrent relay to ensure that during a fault the relay is capable of withstanding the let-through energy of the fuses without damage (Figures 12.11 and 12.15).

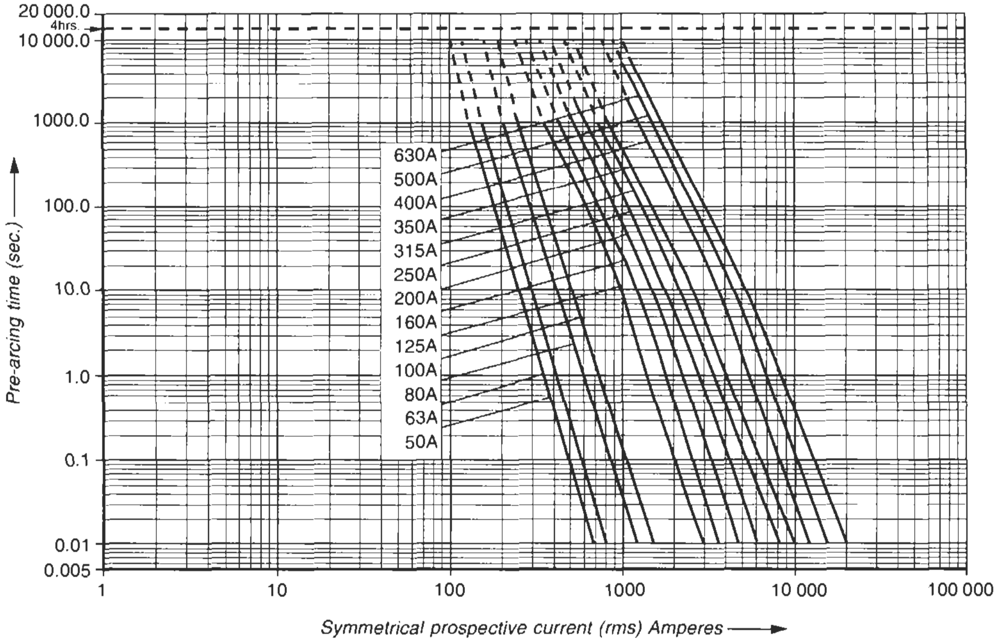

Figure 12.49 Typical time–current characteristics of 6.6 kV HRC fuses

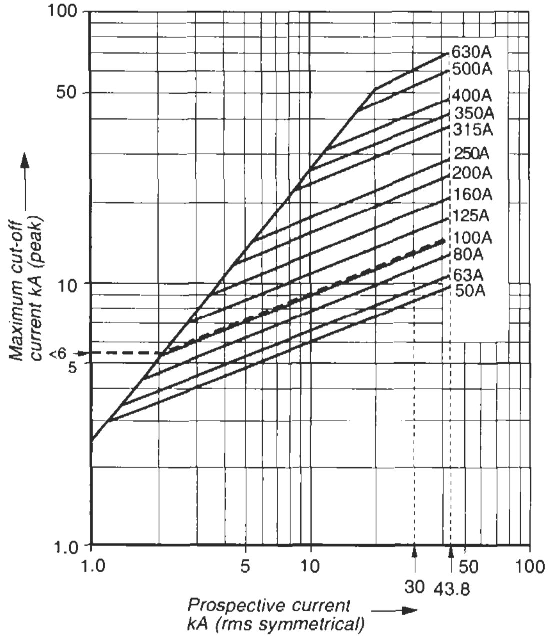

Illustration

A 100 A fuse will cut-off an I_{sc} of 30 kA (peak value up to 2.5 × 30 kA) at less than 6 kA peak

Figure 12.50 Typical current cut-off characteristics of 6.6 kV HRC fuses at prospective currents up to 43.8 kA

12.10.4 HRC fuses

The rating of the fuses often decide the rating of the above components. They are readily available up to 1000 A to switch all sizes of motors recommended on an LT system. The characteristics of the fuses must match with the thermal withstand $I^2 - t$ characteristic of the equipment or the circuit it has to protect, as discussed earlier. Broadly speaking, they must prevent the switch or the contactor from breaking currents beyond their thermal capacity and prevent contact welding. The minimum rating of the fuses is chosen as 1.6 to 2 times the full-load current of the motor for a DOL start and about 1.25 to 1.50 for a Y/Δ start to ensure that the fuses stay intact without interrupting the motor during a start. One particular brand of HRC fuses has been considered here in making the selection. The ratings may slightly vary with the other brands of fuses, depending upon their $I^2 - t$ characteristics (Figure 12.59).

12.10.5 Selection of cables

This is also based on the full-load current. A cable generally has a much higher thermal capacity than the cut-off time of the HRC fuses of a corresponding rating. Also refer to $I^2 - t$ curves for cables in Chapter 16, Appendix 1, Figures A16.4(a) and (b) and cable selection criterion as in Figure A16.5. It is, however, advisable to check the fuse let-through energy, which should not be more than the short-time rating of the cable. The following may also be kept in mind while selecting the cables:

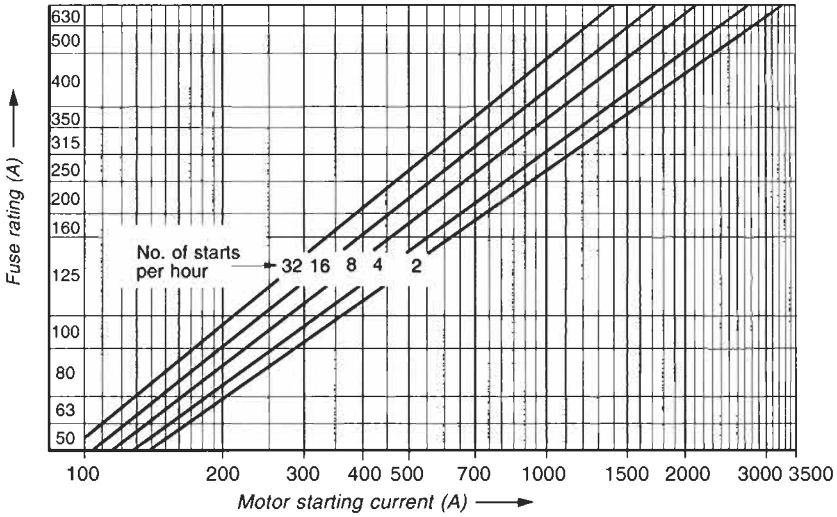

Figure 12.51 Fuse selection chart for a 6.6 kV system for motors with run-up time not exceeding 15 seconds

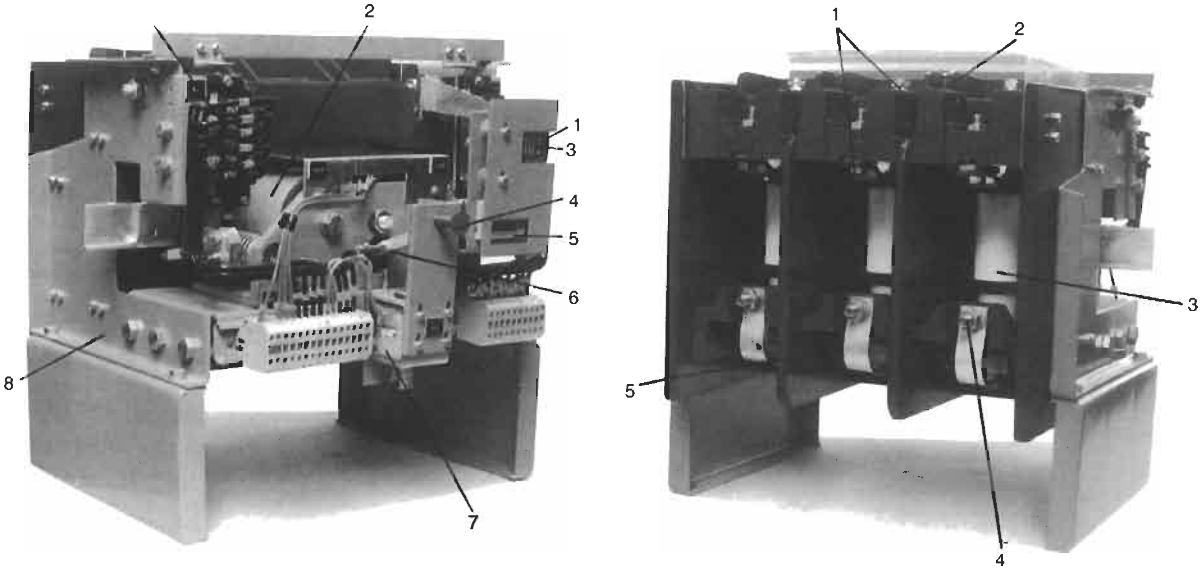

1 – Auxillary switch
2 – Closing solenoid
3 – On/off indicator
4 – Mechanical off-push button
5 – Operation counter
6 – Mechanical latching device
7 – Trip coil
8 – Metallic base frame

1 – Upper contact terminal
2 – Epoxy cast armature assembly
3 – Vacuum interrupter
4 – Lower contact terminal
5 – Epoxy resin moulded body

Front view

Rear view

Figure 12.52 Vacuum contactor (Courtesy: Jyoti Ltd.)

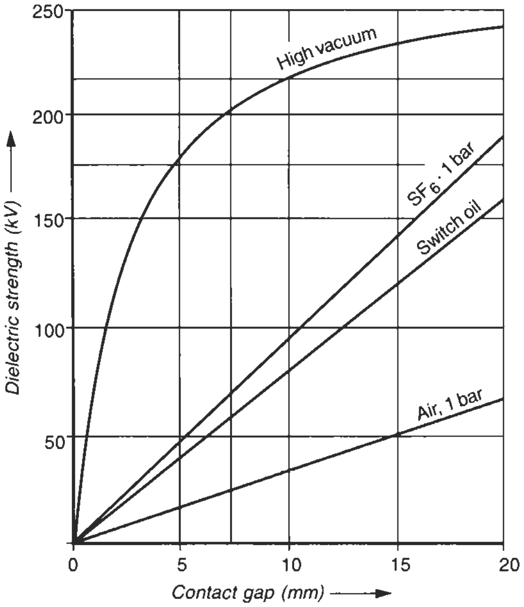

Figure 12.53 Dielectric strength of various media as a function of contact gap

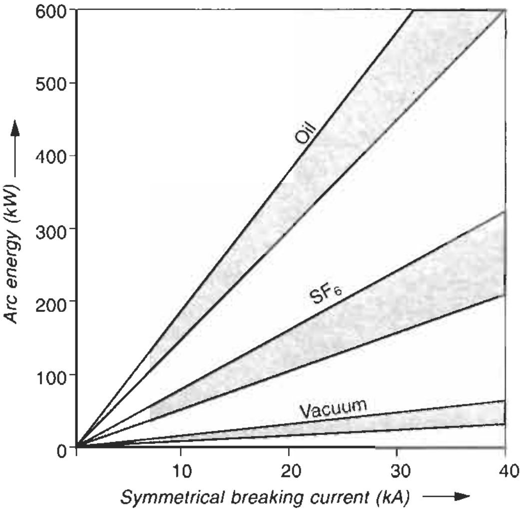

Figure 12.54 Comparison of arc energy produced by medium-voltage circuit breakers

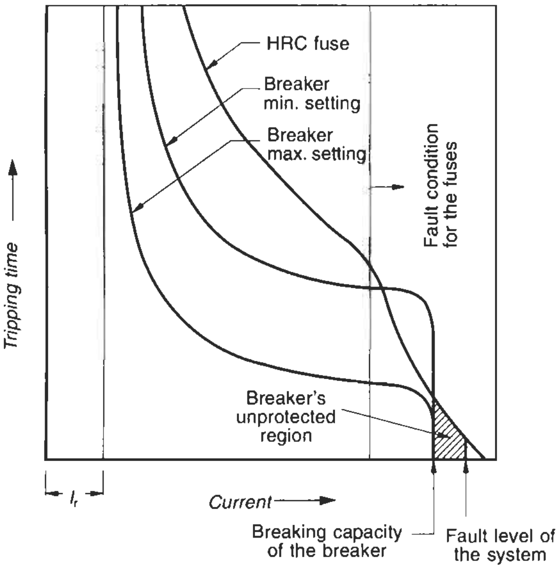

On faults exceeding I_{sc} of breaker, I^2Rt (fuses) < I^2Rt (breaker)

Figure 12.55 Coordination of fuses with a breaker

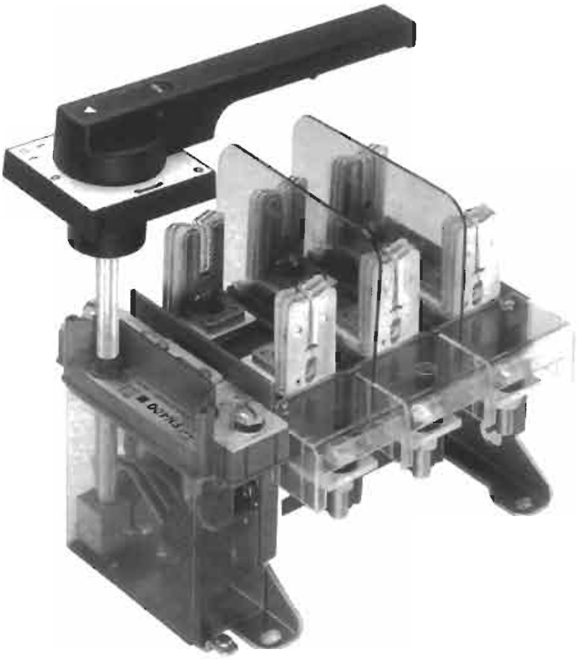

Figure 12.56 Switch disconnector fuse unit (Courtesy: L&T)

- Whether the installation of the cable is in air, a duct or in ground. This will determine the type of cable required, i.e. armoured or unarmoured.
- Ambient temperature.
- I_{st} and its duration.
- Number of power cables running together and their configuration. For more details refer to Chapter 16, Appendix 1. The cooling of the cables is affected by the number of cables and their formation. This detail is also provided in Appendix 1. For more details consult the cable manufacturer.
- Length of the cable from the starter to the motor. This will help to determine the voltage drop from the starter to the motor terminals during a start. It must be limited to only 2–3% of the rated voltage because the incoming receiving point voltage itself may already be less than the rated. This is illustrated in Figure A16.3. When the cumulative effect of all such drops exceeds 6%, it may

Table 12.5 Duty cycles for a contactor or a switch

Serial no.	*AC duty*		*Application*
	For contactors	*For switches*	
1	AC1	AC21	Nearly resistive switching such as heaters, resistance furnaces and lighting loads etc.
2	AC2	AC22	High-resistance and low-inductance switching such as a slip-ring motor switching
3	AC3	AC23	High-inductive switching such as the switching of squirrel cage motors and inductors. Occasional inching and plugging operations, such as during start-up period
4	AC4*	–*	Stringent inductive switching, such as the switching of a squirrel cage motor with inching and plugging operations (Section 6.20.1(B))
5	AC6b	AC23	High capacitive switching such as capacitor banks

*Applicable only for contactors. A switch is neither required nor suitable to perform a duty such as inching or plugging.

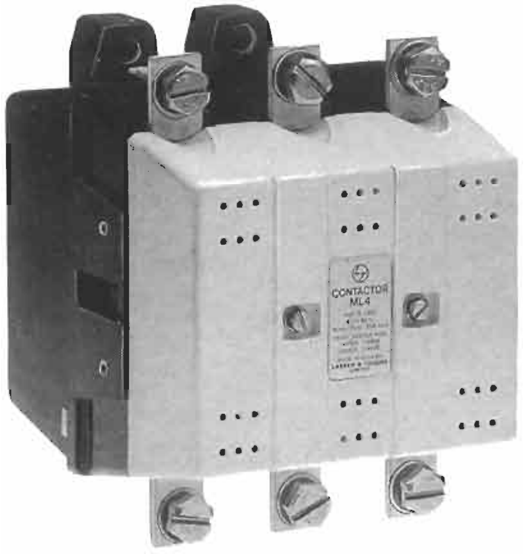

Figure 12.57 Air break contactor (Courtesy: L&T)

tend to destabilize the distribution system and influence other feeders connected on the same system.

- A heavy drive, requiring a prolonged starting time, may require larger fuses. In which case the cable size may also be increased accordingly.

In some cases, where the nearest rating of the fuse itself is too high for the rated current, a larger cable is recommended. The thermal ($I^2 - t$) characteristics of all such components will vary from one manufacturer to another and may not be readily available with a design or a field engineer, while making the selection. The manufacturers of such components therefore as standard practice, perform this coordination for their products and make such data readily available for the user to make a quick selection. It may be noted that OCR and fuses at least, of different brands, will require a new coordination.

12.11 Fuse-free system

Fuses are prone to cause a single phasing by not operating all three of them simultaneously. They may also require a longer downtime to replace. Therefore, the new concept

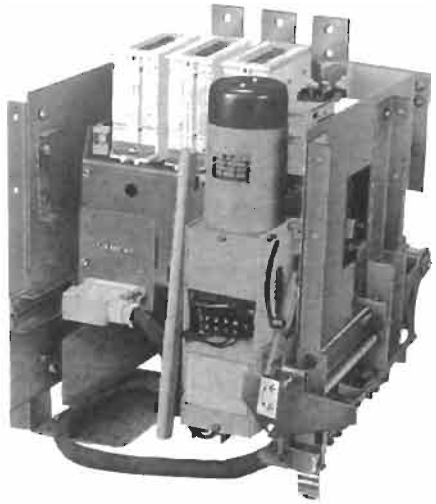

Air circuit breaker (ACB) (Courtesy: Siemens)

Moulded case circuit breaker (MCCB)
(Courtesy: GE Power Controls)

Figure 12.58

Figure 12.59 HRC fuses (Courtesy: L&T)

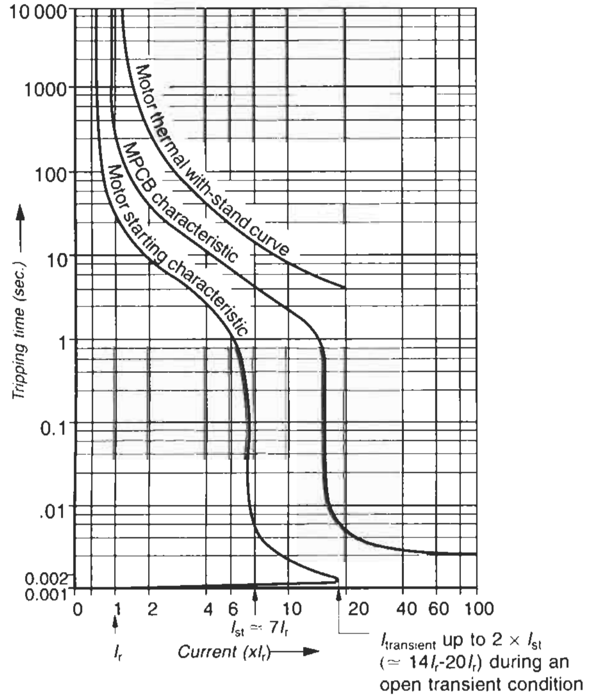

Figure 12.60 Coordination of MPCB characteristics with the motor characteristics (eliminating the use of HRC fuses)

that is gaining preference is a fuse-free system, particularly on an LT system. It is possible to achieve such a system through miniature and moulded case circuit breakers (MCBs and MCCBs) designed especially to match the $I^2 - t$ characteristics of a motor. They are also designed to be fast acting and *current limiting*, like HRC fuses. On a fault, they would also trip long before the prospective peak of the fault current, and have characteristics similar to Figure 12.17 and limit the let-through energy (I^2Rt) of the fault. Although a costlier proposition, they eliminate the above deficiencies of a fuse and ensure a three-phase interruption, on the one hand and a prompt reclosing, after a trip on fault, on the other. The contactor, however, may still be essential in the circuit to permit frequent switching operations. A separate OCR may also be essential to closely match the thermal characteristics of the motor, as the characteristics of the releases of the MCBs or MCCBs may underprotect the motor. Such an exercise may also be time consuming initially, as the manufacturers of MCBs and MCCBs may, at best, provide their characteristics and coordination with their brand of components. The coordination of MCBs and MCCBs with components of other brands may have to be done individually, by the design engineer, more so initially, until all in the field become acquainted with this philosophy and characteristics of all brands of MCBs and MCCBs.

12.11.1 Motor protection circuit breakers (MPCBs)

A few manufacturers have provided an improvised version of the above in the form of a motor protection circuit breaker (MPCB). This can match closely the thermal characteristics of a motor. In this case one MPCB will be sufficient to replace the HRC fuses and the thermal relay and a separate OCR may not be necessary. Since the range of MPCBs is limited presently, so are the motor ratings that can be protected. With the use of MPCBs no individual component matching will be necessary as in the above case. Figure 12.60 illustrates a typical characteristic of an MPCB. Notice that the basic difference between an ordinary OCR and an MPCB is the withstand capability of MPCB on a fault. An MPCB is now able to take care of fault currents and switching transient currents and isolate the circuit much more quickly on an actual fault. An ordinary relay cannot withstand fault currents and requires backup protection through HRC fuses.

The characteristic shown also suggests that the MPCBs can withstand current transients up to 100 times the rated current (or the current setting) and hence are capable of switching a capacitor and protecting them against overloads.

12.11.2 Component ratings

In both the above cases, besides saving on the cost of the switch and fuses, one can also economize on the cost of other equipment, such as main power cables, contactor and the internal wiring of the starter (particularly from the busbars to the MCB, MCCB or MPCB). The rating of all such equipment can now be lower and commensurate with that of the MCB, MCCB or MPCB and, hence, can be very close to the full load current of the motor and thus economize on cost. In conventional fuse protection, their rating was governed by the rating of the fuses, and the fuses had to be of higher rating than the rated current of the motor to remain immune from momentary transient conditions and also to allow for a minimum fusing time

Relevant Standards

IEC	*Title*	*IS*	*BS*
60034–1/1996	Rotating electrical machines Rating and performance for rotating machines	4722/1992	BS EN:60034-1/1995
60034–11/1978	Rotating electrical machines. Built-in thermal protection, rules for protection of rotating electrical machines	—	BS: 4999-111/1987
60072-1/1991	Dimensions and output series for rotating electrical machines. Frame number 56 to 400 and Flange number 55 to 1080	1231/1991	BS: 5000-10/1989 BS: 4999-141/1987
60072-2/1990	Dimensions and output series for rotating electrical machines. Frame number 355 to 1000 and Flange number 1180 to 2360	1231/1991	BS: 5000-10/1989 BS: 4999-103/1987
60072-3/1994	Dimensions and output series for rotating electrical machines. Small built-in motors. Flange number BF 10 to BF 50	996/1991	BS: 5000-11/1989
60298/1990	A.C. metal-enclosed switchgear and controlgear for rated voltages above 1 kV and up to and including 52 kV	3427/1991	BS EN: 60298/1996
60470/1974	A.C. contactors for voltages above 1 kV and up to and including 12 kV	9046/1992	BS: 775-2/1984
60644/1979	Specification for high-voltage fuse-links for motor circuit applications	—	BS EN: 60644/1993
60751/1983	Industrial platinum resistance thermometer sensors	—	BS EN: 60751/1996
60892/1987	Effects of unbalanced voltages on the performance of 3ϕ cage induction motors		
60947/1999	Specification for low-voltage switchgear and controlgear	—	BS EN: 60947
60947-1/1999	Low-voltage switchgear and controlgear. General rules and test requirements	13947-1/1993	BS EN: 60947-1/1998
60947-3/1998	Switches and SFUS/FSUS	13947-3/1993	BS EN:60947-3/1992
60947-4-1/1996	Contactors and motor starters. Electromechanical contactors and motor starters	13947-4-1/1993	BS EN:60947-4-1/1992
60947-5-1/1997	Control circuit devices and switching elements – electromechanical control circuit devices	13947-5-1/1993	BS EN : 60947-5-1/1992

Relevant US Standards ANSI/NEMA and IEEE

ANSI C.37.42/1989	Standard on distribution cut out and fuse links
ANSI C.37.47/1992	Specifications for distribution fuse disconnecting switches, fuse supports and current limiting fuses
NEMA/MG 1/1993	Motors and generators ratings, costruction, testing and performance
NEMA-AB1/1993	Moulded case circuit breakers and moulded case switches up to 1000 V a.c. Rating more than 5000 A
NEMA-AB3/1996	Moulded case circuit breakers and their application, up to 1000 V a.c. Rating 5000 A and more
NEMA/FU-1/1986	Low-voltage cartridge fuses

Notes

1 In the tables of relevant Standards in this book while the latest editions of the standards are provided, it is possible that revised editions have become available. With the advances of technology and/or its application, the updating of standards is a continuous process by different standards organizations. It is therefore advisable that for more authentic references, readers should consult the relevant organizations for the latest version of a standard.

2 Some of the BS or IS standards mentioned against IEC may not be identical.

3 The year noted against each standard may also refer to the year of its last amendment and not necessarily the year of publication.

during the switching operation of the motors.

List of formulae used

Voltage unbalance (negative phase sequence)

Voltage unbalance

$$= \frac{\text{Max. voltage variation from the average voltage}}{\text{Average voltage}} \times 100\% \qquad (12.1)$$

Stator current on an unbalanced voltage

$$I_r = \frac{V_r}{\sqrt{\left[R_1 + R_2' + \frac{(1 - S)}{S} \times R_2'\right]^2 + [X_1 + S \times ssX_2']^2}} \qquad (12.2)$$

and

$$I_u = \frac{V_u}{\sqrt{\left[R_1 + R_2' + \frac{(S-1)}{(2-S)} \times R_2'\right]^2 + [X_1 + (2-S) \times ssX_2']^2}} \tag{12.3}$$

I_u = negative phase sequence current component
V_u = unbalanced voltage
R_2' = rotor resistance referred to stator
X_2' = rotor reactance referred to stator

Stator heat on an unbalanced voltage

(a) Maximum theoretical heat

$$H_{eq}\,(\text{max.}) \propto (I_r^2 + I_u^2 + 2I_r \times I_u) \tag{12.4}$$

(b) Minimum theoretical heat

$$H_{eq}\,(\text{min.}) \propto (I_r^2 + I_u^2 + I_r \times I_u) \tag{12.5}$$

Actual heat generated

$$H_{eq} \propto (I_r^2 + 6I_u^2) \tag{12.6}$$

Actual current on unbalance

$$I_{eq} \propto \sqrt{(I_r^2 + 6I_u^2)} \tag{12.7}$$

Rotor power during an unbalance

$$P = 3\left(I_{rr+}^2 \times R_2 \times \frac{(1-S)}{S} - I_{ru-}^2 \times R_2 \times \frac{(1-S)}{(2-S)}\right) \tag{12.8}$$

I_{2+} = positive sequence current in the rotor circuit, and
I_{2-} = negative sequence current in the rotor circuit

Total rotor heat

$$\propto (I_{rr}^2 + 3I_{ru}^2) \tag{12.9}$$

I_{ru} = negative sequence rotor current

Cumulative rotor current

$$I_{rr\,\text{total}} = \sqrt{(I_{rr}^2 + 3I_{ru}^2)} \tag{12.10}$$

Further reading

1 Beeman, D., *Industrial Power Systems Handbook*, McGraw-Hill, New York (1955).
2 Dommer, R. and Rotter, N.W., 'Temperature sensors for thermal over-load protection of machines', *Siemens Circuit*, **XVII**, No. 4, October (1982).
3 Ghosh, S.N., 'Thermistor protection for electric motors', *Siemens Circuit*, **XI**, No. 3, July (1976).
4 Kaufmann, R.H. and Halberg, M.H., *System over- voltages, causes and protective measures.*
5 Kolfertz, G., 'Full thermal protection with PTC thermistors of three-phase squirrel cage motors', *Siemens Review*, **32**, No. 12 (1965).
6 Lythall, R.T., *AC Motor Control* (on earth fault protection and thermistor protection).
7 Ramaswamy, R., 'Vacuum circuit breakers', *Siemens Circuit*, **XXIII**, April (1988).

Source material

Unbalanced Voltages and Single Phasing Protection, M/s Minilec Controls Private Ltd.
High Voltage HRC Fuses, Publication No. MFG/47, The English Electric Co. of India Ltd.
Surge Suppressors-Bulletin No. T-109, Jyoti Ltd.
Thermistor Motor Protection Relay Catalogue-SP 50125/5482, Larsen and Toubro.
Motor Protection Relay, English Electric Co. of India Ltd, Catalogue Ref. PR. 05:101:A/6/85.
Negative Phase Sequence Relay, M/s English Electric Co. of India Ltd, Catalogue Ref. PR:01:306:A.
Thermal Bimetallic Overload Relays, Bhartiya Cuttler Hammer. Product Catalogue C-305 MC 305/ANA3/6/85.

Appendix

Rules of Thumb for Every-day Use

Contents

Power requirements for pumps

$$\text{h.p.} = \frac{\text{US GPM} \cdot H_F \cdot \rho}{4000 \cdot \eta} \qquad (A.1)$$

Alternatively,

$$\frac{I\ \text{GPM} \cdot H_F \cdot \rho}{3300 \cdot \eta}$$

where

US GPM = discharge in US gallons per minute
I GPM (UK) = discharge in imperial gallons per minute
H_F = head (in feet)
= suction head + static delivery head + frictional head (loss) in pipes and fittings + velocity head

For determining the frictional head, refer to friction loss in pipes, bends, elbows and reducers and valves as provided in Tables A.1 and A.2:

ρ = specific gravity of liquid in g/cm^3
η = unit efficiency of pump

or $$\text{h.p.} = \frac{\text{LPS} \cdot H_m \cdot \rho}{75 \cdot \eta}$$

LPS = discharge in litres per second
H_m = head (in metres)

Friction loss in pipes

Table A.1 provides, for a particular rate of discharge in GPM, the friction loss in pipes for every 100 feet of straight pipe length, reasonably smooth and free from incrustation.

- Friction loss in bends, reducers, elbows etc. are provided in Table A.2 in equivalent pipe length.
- To determine the size of pipe

The economics would depend upon the smoother flow of fluid without excessive friction loss. A smaller section of pipe may not only require a higher h.p. for the same suction and lifting head due to greater frictional losses, but may also cause the pipe to deteriorate quickly as a result of the additional load on its surface. Losses due to bends and valves should also be added in the total friction loss.

Example

Consider a discharge of, say, 20 LPS against a total suction and delivery head of 150 m through a mains 1000 m long. Considering an average of 25 bends, elbows, tees and reducer fittings in the total length of pipe, then from Table A.1.

Total equivalent length of pipe (assuming that every fitting has an average 5 m of equivalent pipe length, to account for friction) $= 1000 + 25 \times 5$

$= 1125$ m

A 125 mm pipe has a friction loss of nearly 33 m per 1000 m and a 150 mm size of pipe, 13 m per 1000 m.

$\therefore$ Total frictional head for a 125 mm pipe $= \frac{1125}{1000} \times 33$

$= 37.125$ m

and for a 150 mm pipe $= \frac{1125}{1000} \times 13$

$= 14.625$ m

A friction loss of 37.125 m in a total length of 1000 m is quite high and will require a larger motor. Therefore, a 150 mm main pipeline will offer a better and more economical design compared to a 125 mm pipeline such as the reduced cost of the prime mover and lower power consumption during the life of pumping system, in addition to a longer life span of a 150 mm pipe compared to a 125 mm pipe.

Power requirements for lifts

(i) **For linear motion drives**
Where the weight of the cage and half of the passengers load is balanced by the counter weight

$$P = \frac{0.746 \times W \times V}{2.75 \times \eta} \qquad (A.2)$$

where
P = kW required
W = passengers load in kg
V = speed of lift in m/s
η = unit efficiency of the drive.

(ii) **For rotary motion drives**
Using equation (1.8).

$$P = \frac{T \cdot N}{974 \cdot \eta} \qquad (A.3)$$

where
P = kW required
T = load torque in mkg
N = speed of drive in r.p.m.
η = unit efficiency of the drive

Power requirements for fans

$$P = \frac{\text{LPS} \cdot p}{75 \cdot \eta} \qquad (A.4)$$

where
P = kW required
LPS = quantity of air in litres per second.
p = back pressure of air at the outlet in metres of a column of water.

Note These are actual power requirements for various applications. Add 10–15% to these figures to select the size of the motor to account for unforeseen losses during transmission from motor to load and other frictional losses. Too large a motor will give a poor power factor and a poor efficiency, while too small a size will run overloaded (Section 1.8). These considerations must be kept in mind while selecting the motor rating.

Important formulae

Moment of inertia

$$GD^2 = 4 \cdot g \cdot (mr^2) = 4\,Wr^2 \qquad (A.5)$$

where
$W = m \cdot g$ (mass × gravity)
r = radius of gyration

Temperature

Conversion from Fahrenheit (°F) to Celsius (°C)

$$\frac{F-32}{9} = \frac{C}{5} \qquad (A.6)$$

where
F = °F
C = °C

Absolute zero = kelvin (1 K)

1 K = –273.15°C

Table A.6 Some useful units

	Unit of
1 N = 0.101972 kgf	Force
1 kg f = 9.807 N	Force
1 kg fm = 9.807 N · m	Energy/torque
1 kg f/m^2 = 9.807 N/m^2	Force
1 J = 1 N.m = 0.10187 kg · fm	Energy/torque
1 W = 1 J/s	Power
1 Wb = 1 V · s	Flux
1 T = 1 Wb/m^2	Flux density
1 Hz = 1 Hz (s^{-1})	Frequency
1 Pa (Pascal) = 1 N/m^2	Pressure
1 bar= 10^5 N/m^2 ≃ 1 atm.	Pressure
1 atm. (atmosphere) ≃ 1 kgf/cm^2 ≃ 735.6 mm of mercury ≃ 1.01325 × 10^{5}N/m^2 1 bar =10^5 pascal ≃ 0.9870 atm.	Pressure
1 torr = $\frac{1.01325 \times 10^5}{760}$ N/m^2 = $\frac{1}{760}$ atm.	Pressure

Absolute zero is the theoretical temperature, at which the atoms and molecules of a substance have the least possible energy. This possibly is the lowest attainable temperature.

Conversion table

Lengths

1 inch = 25.4 mm
1 foot = 30.48 cm
1 mile = 1.609 km
1 cm = 0.3937 inch
1 metre = 39.37 inches
= 3.28 feet
1 km = 3280 feet
= 0.621 mile

Areas

1 in^2 = 6.4516 cm^2
1 ft^2 = 0.0929 m^2
1 cm^2 = 0.155 in^2
1 m^2 = 10.8 ft^2
1 m^2 = 1.196 yd^2

Volumes/weights

*1 Imperial gallon (UK) = 4.546 litres
*1 US gallon = 3.79 litres
1 pint = 0.568 litre
1 litre = 0.22 Imperial gallons
1 lb = 0.453 kg
1 kg = 2.204 lb
1 MT = 0.984 ton
1 T = 1.016 MT
1 litre per second = 13.2 gallons per minute
1 ft^3 of water = 6.23 gallons
1 m^3 of water =220 gallons = 35.31 ft^3
1 ft^3/s = 22,500 gallons/h(GPH)
= 375 gallons/minute (GPM)
1 atmosphere = 30" of mercury
= 14.7 lb/in^2

Torque/force

1 cm.kg = 0.866 inch pounds
1 m.kg = 7.23 foot pounds

Work done

1 kW = 1.36 metric h.p. (PS)
= 1.341 h.p.
1 h.p. = 0.746 kW
= 1.014 PS (metric h.p.)
1 PS (mhp) = 0.736 kW
= 0.986 h.p.

---

*Unless specified all conversions made earlier relate to Imperial gallons only.

Table A.1 *(Contd)*

Pipe diameter in millimetres

Disch. l/s	*40*	*50*	*60*	*70*	*80*	*100*	*125*	*150*	*200*	*250*	*300*	*350*	*400*	*450*	*500*	*600*	*700*	*800*	*900*	*1000*	*1200*
9.0		900	360	150	75	22	6.8	2.7													
9.5		1000	380	170	83	25	7.6	2.9													
10			430	190	94	28	8.5	3.2	0.65												
12			630	270	130	40	12.3	4.7	1.0												
14			860	370	180	55	16.5	6.3	1.3												
16				470	230	72	22	8.3	1.7	0.55											
18				600	300	90	28	10.5	2.2	0.68											
20				720	370	110	33	13	2.7	0.68											
22				860	450	135	41	16	3.3	1.0	0.38										
24					520	160	48	19	4.0	1.2	0.45										
26					620	187	56	22	4.7	1.45	0.55										
28					720	220	66	25	5.5	1.65	0.6										
30					800	250	75	28	6.3	1.9	0.7	0.32									
35						330	103	40	8.5	2.7	0.95	0.45									
40						450	135	52	11	3.3	1.28	0.58	0.28								
45						560	170	65	14	4.3	1.6	0.73	0.37								
50						700	210	83	17	5.5	2.0	0.9	0.45	0.23							
55						850	265	97	22	6.5	2.4	1.1	0.55	0.28							
60						1000	320	115	25	7.5	2.8	1.3	0.65	0.35	0.20						
65							370	140	29	9.0	3.4	1.5	0.75	0.40	0.23						
70							420	163	35	10.9	4.0	1.8	0.88	0.47	0.27						
75							480	185	39	12	4.6	2.1	1.0	0.53	0.30						

Table A.1 *(Contd)*

Pipe diameter in millimetres

Disch. l/s	*40*	*50*	*60*	*70*	*80*	*100*	*125*	*150*	*200*	*250*	*300*	*350*	*400*	*450*	*500*	*600*	*700*	*800*	*900*	*1000*	*1200*
9.0		900	360	150	75	22	6.8	2.7													
9.5		1000	380	170	83	25	7.6	2.9													
10			430	190	94	28	8.5	3.2	0.65												
12			630	270	130	40	12.3	4.7	1.0												
14			860	370	180	55	16.5	6.3	1.3												
16				470	230	72	22	8.3	1.7	0.55											
18				600	300	90	28	10.5	2.2	0.68											
20				720	370	110	33	13	2.7	0.68											
22				860	450	135	41	16	3.3	1.0	0.38										
24					520	160	48	19	4.0	1.2	0.45										
26					620	187	56	22	4.7	1.45	0.55										
28					720	220	66	25	5.5	1.65	0.6										
30					800	250	75	28	6.3	1.9	0.7	0.32									
35						330	103	40	8.5	2.7	0.95	0.45									
40						450	135	52	11	3.3	1.28	0.58	0.28								
45						560	170	65	14	4.3	1.6	0.73	0.37								
50						700	210	83	17	5.5	2.0	0.9	0.45	0.23							
55						850	265	97	22	6.5	2.4	1.1	0.55	0.28							
60						1000	320	115	25	7.5	2.8	1.3	0.65	0.35	0.20						
65							370	140	29	9.0	3.4	1.5	0.75	0.40	0.23						
70							420	163	35	10.9	4.0	1.8	0.88	0.47	0.27						
75							480	185	39	12	4.6	2.1	1.0	0.53	0.30						

Table A.1 *(Contd)*

	Pipe diameter in millimetres																				
Disch. l/s	*40*	*50*	*60*	*70*	*80*	*100*	*125*	*150*	*200*	*250*	*300*	*350*	*400*	*450*	*500*	*600*	*700*	*800*	*900*	*1000*	*1200*
80							550	220	43	14	5.2	2.4	1.12	0.6	0.35						
85							600	230	50	15	5.8	2.7	1.3	0.7	0.38	0.16					
90							680	270	56	17	6.5	2.9	1.45	0.77	0.45	0.17					
95							750	300	63	19	7.2	3.3	1.6	0.85	0.50	0.19					
100							850	330	70	22	8.0	3.7	1.8	0.95	0.55	0.22					
120								460	98	32	11.2	5.3	2.6	1.4	0.77	0.29	0.13				
140								650	135	42	15.5	7.0	3.5	1.85	1.05	0.42	0.17				
160													4.5	2.5	1.4	0.54	0.22	0.11			
180													5.7	3.2	1.8	0.68	0.30	0.14			
200													7.0	3.8	2.2	0.83	0.36	0.18			
220													8.5	4.6	2.7	1.0	0.43	0.22	0.12		
240													10.0	5.6	3.2	1.2	0.52	0.25	0.15		
260													12	6.5	3.7	1.4	0.62	0.3	0.17		
280													14	7.3	4.2	1.65	0.70	0.34	0.19		
300													15.5	8.4	5.0	1.85	0.8	0.4	0.22		
350													22	11.5	6.6	2.6	1.1	0.52	0.28		
400													28	15.0	8.5	3.3	1.5	0.7	0.38	0.22	
450													35	19.0	11.0	4.2	1.85	0.8	0.48	0.28	
500													43	21.5	14.0	5.2	2.3	1.1	0.6	0.35	
550													53	28	16.5	6.2	2.8	1.3	0.72	0.42	
600													63	33	20	7.3	3.3	1.6	0.85	0.50	0.19
650													73	40	23	8.5	3.8	1.9	1.0	0.58	0.22
700													85	47	27	10.0	4.5	2.2	1.2	0.70	0.25
750													100	53	31	11.5	5.2	2.5	1.3	0.76	0.28

Table A.2 Friction in fittings in equivalent of pipe length (ft)

Pipe size (mm)	*40*	*50*	*60*	*75*	*100*	*125*	*150*	*200*	*250*	*300*	*350*	*400*	*450*	*500*	*600*	*750*	*900*	*1050*	*1200*
Elbow 90°	4	5	6.1	8	11	13	16	20	26	30	36	41	45	52	63	77	92	115	130
Medium bend	3.5	4.5	5.6	6.5	9	12	14	18	22	26	33	36	40	44	54	67	76	96	110
Gate valve	1	1.2	1.5	1.8	2.4	2.9	3.5	4.5	5.6	6.5	8	9	10	11	14	16	20	23	26

Table A.3 Table of conversions of gallons per minute into litres per second*

GPM	*l/s*	*GPM*	*l/s*	*GPM*	*l/s*	*GPM*	*l/s*
5	0.379	175	13.25	510	38.6	860	65.2
10	0.758	180	13.65	520	39.4	870	66.0
12	0.910	185	14.0	530	40.2	880	66.7
13.2	1.0	190	14.4	540	40.9	890	67.4
15	1.14	195	14.8	550	41.6	900	68.2
20	1.52	200	15.16	560	42.4	910	68.9
25	1.89	210	15.9	570	43.2	920	69.7
30	2.28	220	16.9	580	43.9	930	70.4
32	2.5	230	17.4	590	44.7	940	71.2
35	2.65	240	18.9	600	45.5	950	71.9
40	3.15	250	18.2	610	46.2	960	72.7
45	3.41	260	19.7	620	47.0	970	73.4
50	3.79	270	20.4	630	47.7	980	74.2
55	4.16	280	21.2	640	48.4	990	75.0
60	4.55	290	22.0	650	49.2	1000	75.7
65	4.92	300	22.7	660	50.0	1050	79.0
70	5.3	310	23.4	670	50.7	1100	83.3
75	5.68	320	24.2	680	51.4	1150	87.0
80	6.05	330	25.0	690	52.2	1200	91.0
85	6.45	340	25.7	700	53.0	1250	94.5
90	6.82	350	26.4	710	53.7	1300	98.5
100	7.58	360	27.2	720	54.4	1350	102.0
105	7.95	370	28.0	730	55.2	1400	106.0
110	8.33	380	28.7	740	56.0	1450	110.0
115	8.7	390	29.4	750	56.7	1500	113.5
120	9.1	400	30.2	760	57.5	1600	121.0
125	9.45	410	31.0	770	58.3	1650	125.0
130	9.85	420	31.7	780	59.1	1700	129.0
135	10.2	430	32.4	790	59.8	1750	132.0
140	10.6	440	33.2	800	60.5	1800	136.5
145	11.0	450	34.0	810	61.3	1850	140.0
150	11.35	460	34.7	820	62.1	1900	144.0
155	11.75	470	35.4	830	62.8	1950	148.0
160	12.1	480	36.2	840	63.5	2000	151.5
165	12.5	490	37.0	850	64.4		
170	12.9	500	37.9				

Imperial gallons (UK)

Table A.4 Head of water in feet and equivalent pressure in pounds per square inch

Head (ft)	*lb/in^2*	*Head* (ft)	*lb/in^2*	*Head* (ft)	*lb/in^2*
1	0.43	55	23.82	190	82.29
2	0.87	60	25.99	200	86.62
3	1.30	65	28.15	225	97.45
4	1.73	70	30.32	250	108.27
5	2.17	75	32.48	275	119.10
6	2.60	80	34.65	300	129.93
7	3.03	85	36.81	325	140.75
8	3.40	90	38.98	400	173.24
9	3.90	95	41.14	500	216.55
10	4.33	100	43.31	600	259.85
15	6.50	110	47.64	700	303.16
20	8.66	120	51.97	800	346.47
25	10.83	130	56.30	900	389.78
30	12.99	140	60.63	1000	433.09
35	15.16	150	64.96		
40	17.32	160	69.29		
45	19.49	170	73.63		
50	21.65	180	77.96		

Table A.5 Pressure in pounds per square inch and equivalent head of water in feet

lb/in^2	*Head* (ft)	*lb/in^2*	*Head* (ft)	*lb/in^2*	*Head* (ft)
1	2.31	45	103.90	150	346.34
2	4.62	50	115.45	160	369.43
3	6.93	55	126.99	170	392.52
4	9.24	60	138.54	180	415.61
5	11.54	65	150.08	190	438.90
6	13.85	70	161.63	200	461.78
7	16.16	75	173.17	225	519.51
8	18.47	80	184.72	250	577.24
9	20.78	85	196.26	275	643.03
10	23.09	90	207.81	300	692.69
15	34.63	95	219.35	325	750.41
20	46.18	100	230.90	350	808.13
25	57.72	110	253.98	375	865.89
30	69.27	120	277.07	400	922.58
35	80.81	130	300.16		
40	92.36	140	323.25	500	1154.48

PART II

Switchgear Assemblies and Captive Power Generation

13

Switchgear and Controlgear Assemblies

Contents

13.1 Application

These assemblies are fitted with switching devices (breakers, switches, fuse switches and contactors etc.) and control and measuring instruments, indicating, regulating and protective devices etc. to transform the assemblies into composite units, called control centres to perform a number of functions in the field of distribution and control of electrical power. Some of these functions may be one or more of the following:

1 To control, regulate and protect a generator and its auxiliaries in a power station.
2 To control, regulate and protect the conversion, when necessary, from one voltage to another, in a generating station or a switchyard for the purpose of further transmission or distribution of power.
3 Transmission of power.
4 Distribution of power.

The basic idea of adopting to such a control system is to broadly accomplish the following in normal operation:

1 To have ease of operation and control a group of load or control points from one common location.
2 To monitor system operations for better coordination between the various feeders and rapid control of the feeders.
3 To provide a sequential operation when required between the various feeders or to have an electrical interlocking scheme between them. For a general idea refer to Figure 13.51, illustrating a typical sequential scheme showing electrical interlocking between the various feeders for an air-conditioning plant.

Thus the basic purpose of a centralized power or auxiliary control system is to achieve in service:

- Ease of operation and control
- More flexibility
- Ease of testing the electrical installation
- Ease of checking the control scheme, if any, on no-load before commencing the process.
- More safety
- More reliability

13.2 Types of assemblies

Depending upon their application, a switchgear or a controlgear assembly can be one of the following types:

1 Open Type This type of assembly is without an enclosure, as used in an outdoor switchyard or as mounted on a pole, such as a gang-operated switch.
2 Metal enclosed type This type of assembly is completely enclosed on all sides by sheet metal except for the operating handles, knobs, instruments and inspection windows. The more conventional of them in use may be classified as follows.

13.2.1 Power control and distribution

Power control centres (PCCs) (Figure 13.1)

These may receive power from one or more sources of supplies and distribute them to different load centres, which may be a motor control centre (MCC) or a distribution board (DB), as illustrated in Figures 13.2

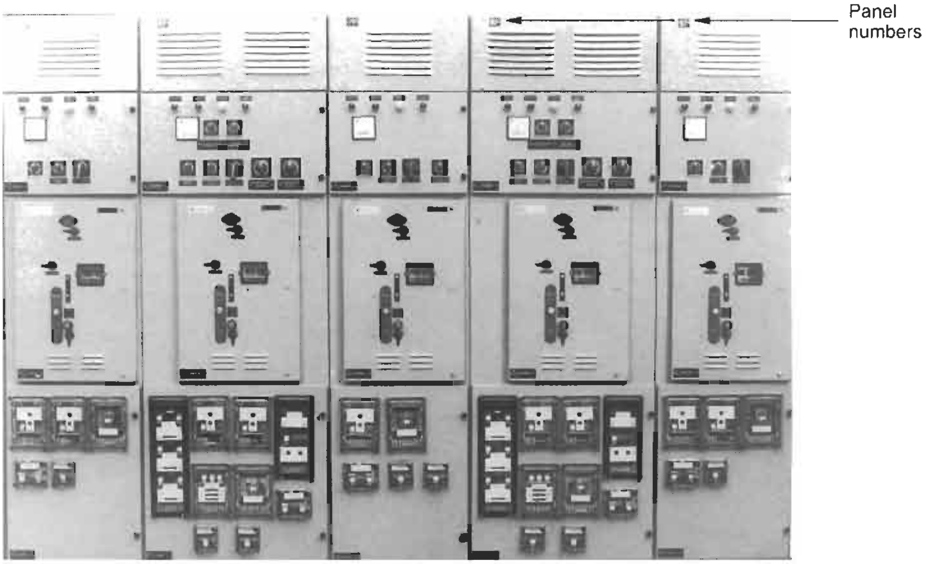

Figure 13.1 A typical cubicle-type power control centre (Courtesy: ECS)

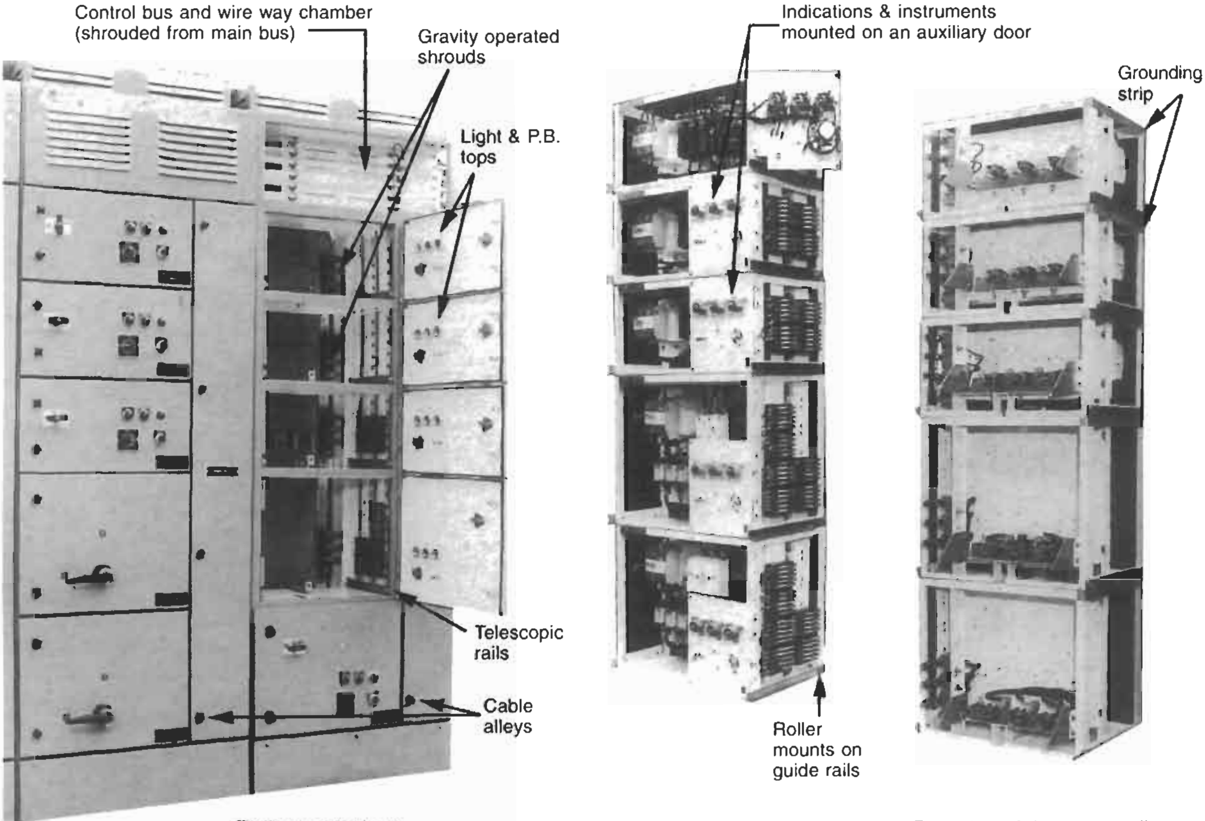

Trolleys racked out
Front view of drawn out trolleys
Rear view of drawn out trolleys

Figure 13.2 Details of a draw-out motor control centre (MCC) (Courtesy: ECS)

and 13.3 respectively. They therefore comprise larger ratings of feeders compared to the feeders in an MCC or a DB.

Motor control centres (MCCs) (Figure 13.2)

These receive power from the PCC and feed it to a number of load points, the majority of them being motors operating on an electrical installation or a process line.

When there is only one process line and one MCC alone is adequate to control the entire process, it is possible to combine the PCC and the MCC into one unit to save on space and cost. The assembly may now be called a PMCC (power-cum-motor control centre).

Distribution boards (DBs) (Figures 13.3 and 13.4)

These are comparatively smaller assemblies and distribute power to the utilities of an installation, which can be an industrial, a commercial or a residential complex. The utilities may be one or more of the following essential services:

- Lighting loads
- Cooling and heating loads
- Water supplies (pump sets)
- Firefighting (pump sets)
- Lifts and escalators
- Welding sockets etc. for future maintenance of the installation.

A DB becomes larger when it serves a residential colony, a multi-storey building or a shopping complex where the main loads are of utilities only.

13.2.2 Auxiliary controls and monitoring of a process

Such control assemblies are designed to programme the control of a process line and also to monitor its performance through audiovisual indications or a trip command. They receive control cables carrying the different process signals from the MCC, drives and the process control devices (such as temperature, pressure, flow and speed-measuring devices) to actuate the required audiovisual indications or a trip command when the process-operating parameters fluctuate by more than the predefined limits. They operate at control voltage and do not handle any power device. Depending upon the application, they can be termed a control panel (CP), a mimic panel or a relay and control panel. Figures 13.5 and 13.6 illustrate a few such assemblies. (Also refer to Section 16.8 and Figure 16.11). All the above assemblies are floor mounted and free standing, except those that

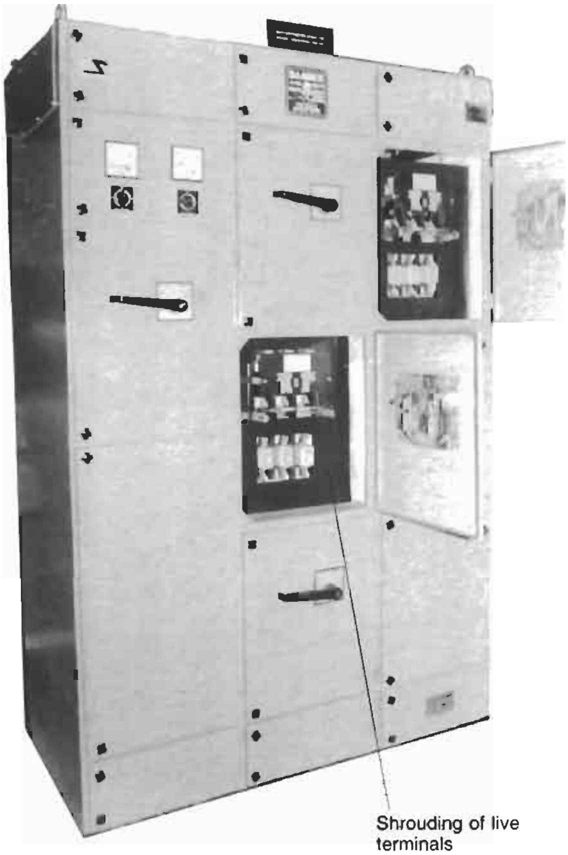

Figure 13.3 A typical cubicle-type fully compartmentalized power distribution board (Courtesy: ECS)

are too small and which can be mounted on a wall or fixed in a recess.

These assemblies may be further classified into single- or double-front assemblies. In double-front, they may be without a maintenance gallery as shown in Figure 13.7, or in a duplex design, with a maintenance gallery between the front and rear rows of panels to provide easy access at the back of the feeders, as shown in Figure 13.8.

In the following text, although we have tried to cover the types of switchgear assemblies mentioned above, more details have been provided for assemblies that relate to a power-generating station, an industry, or installations where use of an electric drive is more common and may require more care. The design of components and devices mounted in a switchgear or a controlgear assembly is beyond the scope of this book. The different types of HT interrupting devices, particularly breakers, being more intricate are, however, discussed in Chapter 19.

13.2.3 PLC-based control panels*

Conventional method to activate controls has been through

Figure 13.4 A non-compartmentalized distribution board

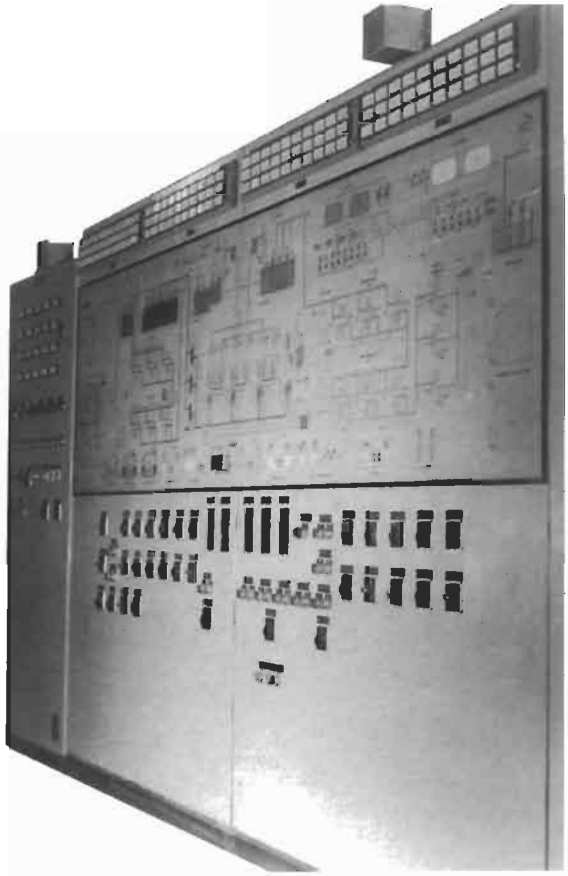

Figure 13.5 A typical mimic-cum-process control panel (Courtesy: ECS)

---

*PLC – Programmable logic controller (a registered trade mark of Allen Bradley Co. Inc., USA).

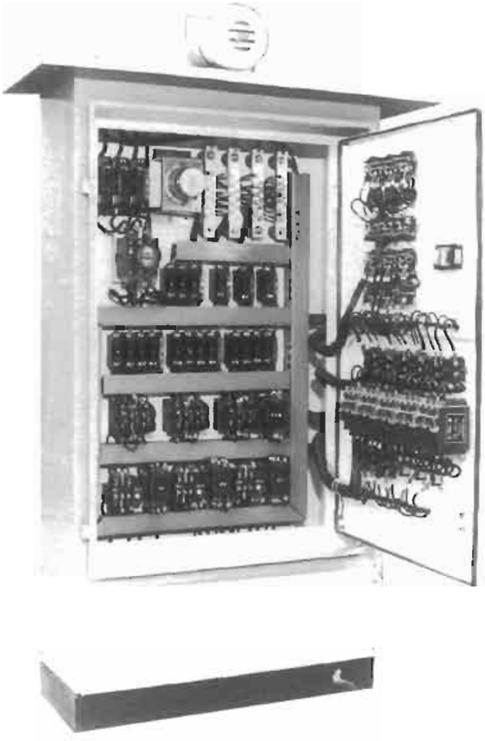

Figure 13.6 A non-compartmentalized outdoor-type control panel (Courtesy: ECS)

auxiliary relays (contactors). The sensing instruments that are located at the various strategic locations of a process line or on the machine feeding the line sense the actual operating conditions continuously and give a signal through its auxiliary relay in the event of an error beyond permissible limits.

In a process industry (e.g. chemical, fertilizer, cement, paper, textile, tyre or petrochemicals) such process controls are numerous, and to closely monitor and control each through the conventional method is arduous and may impose many constraints. They also require cumbersome, excessive and complex wiring and a very large control panel, as shown in Figure 13.6, for a small process line. There will also be limitations in terms of accuracy, response time and control besides maintenance problems. Thus the method is not suited for critical applications. A relay may have to activate another before it activates the correction and regulates the machine feeding the process line, hence adding to more delay. A contactor operation, particularly, introduces an element of time delay (5 to 10 ms each relay) in executing correction because of its inherent closing and interrupting times. Also there may be a number of these operating one after another in tandem before correcting the process. The time delay may affect the quality of process and may not be warranted. With advances in solid-state technology control and feedback devices can now be in the form of logical controllers, which respond instantly and can be programmed in a discrete way, to suit any process needs. A controller is extremely small and can perform the duties of hundreds of such relays and requires only a small space for mounting. It is wired internally and eliminates all external wiring. There are no moving contacts and hence no phenomenon of operating time, contact arcing, or wear and tear of contacts.

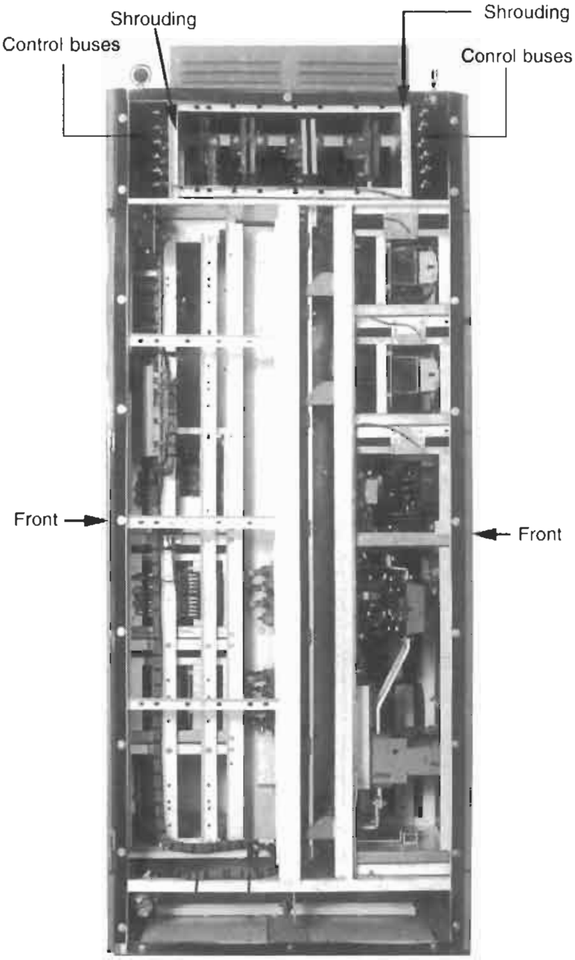

Figure 13.7 Side view of a double front panel with a common horizontal bus, but separate vertical bus bars (not visible) (Courtesy: ECS)

A logical controller is a solid-state *digitally operated* control device which can be programmed to follow a set of instructions such as logic sequencing, timing, counting and arithmetic analysis through digital or analogue input and output signals to respond to the different process requirements. These may be regulating the speed of the motor to perform inching duties as when a loader crane or an elevator is required to adjust its hoisting height precisely at different loading stations or to adjust the movement of a moving platform of a machine tool. Figure 6.49 illustrates a typical process line. It can also perform data handling and diagnostic activities by storing data and messages and also give signals to activate, adjust or stop a process. A logical controller can thus replace a relay-based circuit more efficiently and also offers many more operational facilities and ease of handling than a relay, and all this instantly, without causing a time delay. It contains three main sections:

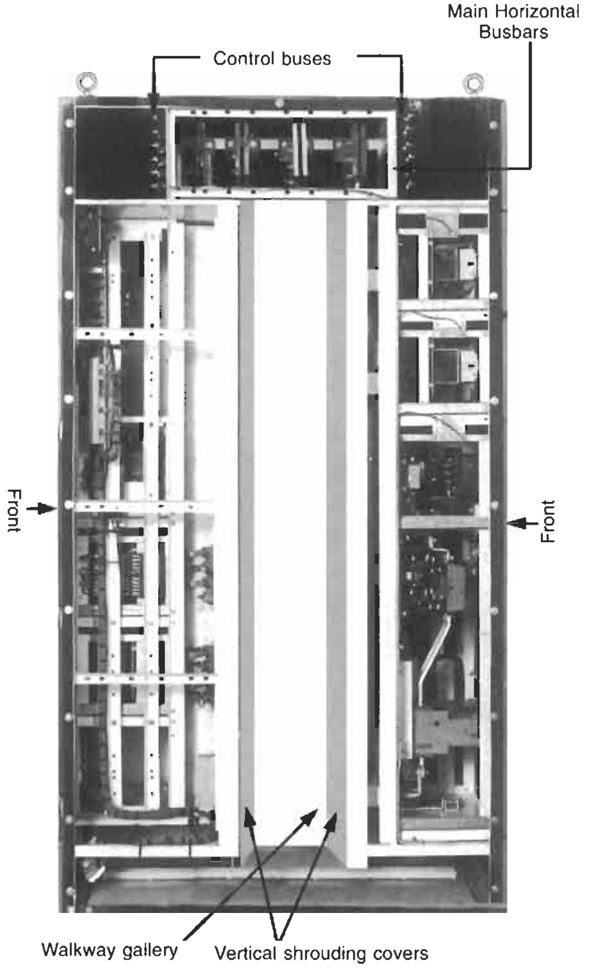

Figure 13.8 A typical general arrangement of a double front panel with a walkway gallery (Courtesy: ECS)

1. **Central processing unit (CPU)** This is in the form of a micro controller and can be called the brain of the PLC. It computes and analyses the various data fed into it. It acts like a comparator and makes decisions on the corrective action necessary to fulfil process needs according to the instructions received from the program stored in the memory and generates the output commands.
2. **Memory unit** This is the unit that stores the data and the messages and the diagnostic information. It stores all the data that defines the process to help the CPU act logically and also stores diagnostic information. It is a part of a computer that contains arithmetical and logical controls and internal memory and programming devices. The unit receives inputs (temperature, pressure, speed or any information which may form a part of the process) from the system. It then compares it with the reference data, which is already programmed into its memory module, analyses it and then sends a corrective signal to the process line devices, controlling temperature, pressure, speed or any other parameter. Or it can be employed in inverter logistics, when it is being used for the control of the drive itself. Figure 13.9 illustrates a basic logical scheme.
3. **Input and output interface** This is the interface between the controlling devices and the processor. The input/output (I/O) unit receives signals from the input devices and transmits output action signals to the controlling devices.

Note
A separate unit is used for programming and editing (e.g. a hand-held programmer or a computer). For on-line editing, keyboards are used. For on-line monitoring, a PLC is interfaced with a computer and special software.

A logical controller is thus a more effective method of replacing the auxiliary relays and is capable of performing many more functions instantly.

A process requiring accurate and instant speed controls must adopt static motor controls, described in Section 6.9, and their control schemes must be activated through programmable logic controllers (PLCs) discussed above.

Shielding of signals

It is important to prevent the control signals from becoming corrupted by electromagnetic interference caused by the power circuits, particularly those carrying the motor currents from the machine to the power-cum-control panel housing the drive and the PLC. During each switching sequence, the motor will draw switching currents and develop switching voltages. Even small electrostatic interference may lead to malfunctioning of the drive. Shielded (screened) control cables are therefore recommended for this purpose for the control panels' internal wiring, particularly between the incoming terminals and the logic controllers (PLCs), cables carrying the TG analogue or pulse encoder digital corrective signals from the field and all sensor and analogue circuits.

The shield is generally a layer of copper wires in the form of a spirally wrapped screen around the control cable. It is grounded at the panel. It is also recommended to avoid a parallel running of power and signal control coaxial cables. Also, for each signal a separate two-core control cable must be used, since common return of different analogue signals is not recommended. A simple grounding scheme for the shielded control cables is illustrated in Figure 13.10.

13.3 Conventional designs of switchgear assemblies (also referred to as switchboards)

Depending upon their application, these may have one of the following construction:

Fixed type
1 Industrial type as shown in Figure 13.11, or

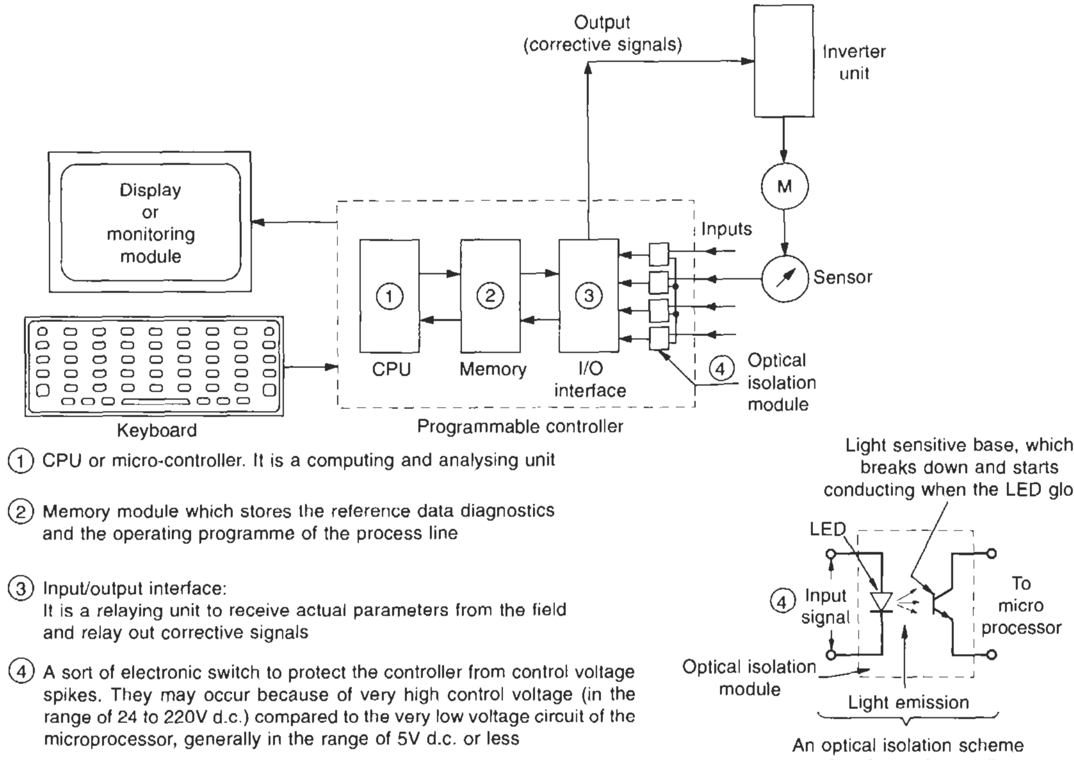

① CPU or micro-controller. It is a computing and analysing unit

② Memory module which stores the reference data diagnostics and the operating programme of the process line

③ Input/output interface:
It is a relaying unit to receive actual parameters from the field and relay out corrective signals

④ A sort of electronic switch to protect the controller from control voltage spikes. They may occur because of very high control voltage (in the range of 24 to 220V d.c.) compared to the very low voltage circuit of the microprocessor, generally in the range of 5V d.c. or less

Figure 13.9 A simple representation of a programmable controller

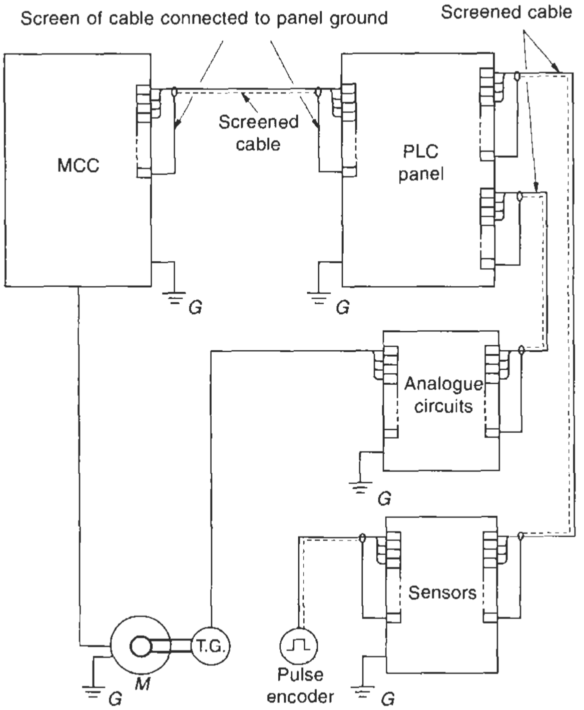

Note It is recommended to provide separate grounding for electronic circuits

Figure 13.10 A simple grounding scheme for the shielded control cables

2 Cubicle type which may be
   (a) In a non-compartmentalized construction as shown in Figure 13.4, or
   (b) A compartmentalized or modular construction as shown in Figures 13.1 and 13.3.

Draw-out

1 Semi-draw-out type, or
2 Fully draw-out type, as shown in Figures 13.2 and 13.12.

13.3.1 Fixed-type construction

In a fixed construction, all the feeders in the switchboard, feeding the various load points, are securely mounted in the assembly and rigidly connected to the main bus. In the event of a fault in one feeder on the bus side, a shutdown of the entire switchboard may be required. A process industry or critical loads can ill afford such an arrangement. However, since this is the most cost-effective switchboard, it is also the most common type and is used extensively. It also suits all applications, except a process industry or critical loads, which may not be able to afford a total shutdown or prolonged downtime in the event of a fault. In such cases a draw-out type switchboard will prove to be a better choice as discussed below. A fixed-type construction may further be classified as follows.

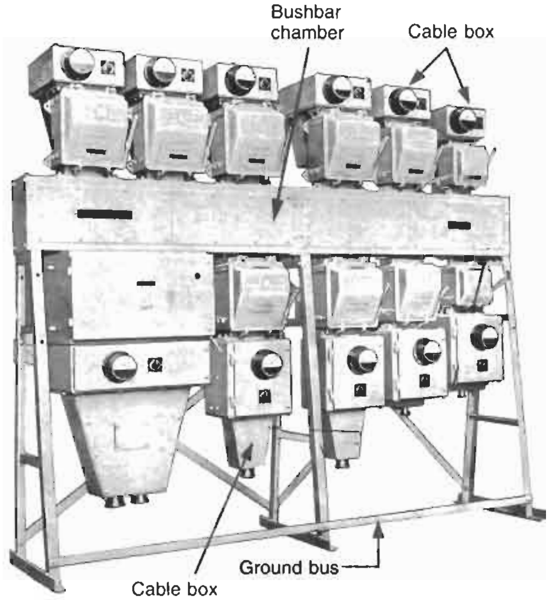

Figure 13.11 A typical industrial type power distribution board

Industrial-type construction

In this construction there is a common bus that runs horizontally and is mounted on vertical floor structures. The feeders are mounted above and below this busbar chamber, as shown in Figure 13.11. Since there are only two feeders in a vertical plane, these switchboards occupy a sizeable floor space, but they are rugged and easy to handle. They are good for very hard use such as construction power – i.e. the temporary power required during the construction period of a project – and have to weather severe climatic and dusty conditions. It is possible to construct them in a cast iron enclosure making them suitable for extremely humid and chemically aggressive areas and also for areas that are fire-prone. The use of such assemblies is now on the decline, due to the availability of better cubicle designs.

Cubicle-type construction

This is in the form of a sheet metal housing, compact in design and elegant in appearance. The feeders are now mounted one above the other up to a permissible height at which the operator can easily operate. It thus makes an optimum utilization of the vertical space and saves on floor area. They can be further classified as follows:

- **Non-compartmentalized type** In this type a group of feeders are housed in one enclosure, and attending one would mean an exposure to the others (Figure 13.4).
- **Compartmentalized type** In this type each feeder is housed in a separate compartment (module) of its own and attending one would limit the exposure only to that unit (Figures 13.1 and 13.3). In this construction a fault, particularly of the nature of a short-circuit, will be contained and localized only to the faulty feeder, without spreading to the nearby feeders.

13.3.2 Draw-out construction

In this construction each feeder is mounted on a separate withdrawable chassis as shown in Figures 13.2 and 13.12. In the event of regular maintenance or repairs, they can be swiftly racked-out or racked-in to their modules without disconnecting the incoming or outgoing power connections or the control terminals*. The modules of identical types can also be easily interchanged and defective modules replaced by spare modules in the event of a fault. Downtime is now low. This arrangement is therefore recommended for all critical installations that require an uninterrupted power supply and cannot downtime during operation. It is most suited for installations such as power stations, refineries, petrochemical plants, fertilizers, and similar process plants. Similarly, hospitals, airports, railways, etc. are also such critical areas that may experience chaos due to a disruption of utilities unless the normal supply is restored swiftly. In such places this type of construction is more appropriate. A draw-out assembly can be designed only in a cubicle construction and is totally compartmentalized. The two types of draw-out constructions noted above can be broadly described as follows.

Semi-draw-out type

In this design the incoming and outgoing power contacts are of the draw-out type, but the control terminals are the plug-in type. (For plug-in type terminals see Figure 13.13 (a)). The plug-in contacts of the control terminal assembly are wired and left loose in the moving trolley, and are engaged manually with the fixed contacts mounted on the frame, after the trolley is racked-in and seated in its place. Similarly, the control terminals are to be disengaged manually first, when the trolley is to be drawn out.

Such a construction is cumbersome and requires utmost caution to ensure that the terminals are properly disengaged before the trolley is racked-out. Otherwise it may pull the wires and snap the connections and result in a major repair. It is also possible that, due to human error, the operator may slip to engage the terminals at the first attempt and may have to do it at a second attempt, adding to the downtime, while energizing or replacing a faulty trolley, eventually defeating the purpose of a draw-out system.

Fully draw-out type

In this construction the control terminals are of the sliding type (Figures 13.13(b) and (c)). The moving contacts are mounted on the trolley while the fixed matching contacts are mounted on the panel frame. These contacts engage or disengage automatically when the trolley is racked-in or racked-out of the module respectively. This type of

---

*Without disconnecting the control terminals. This is possible only in fully draw-out type construction.

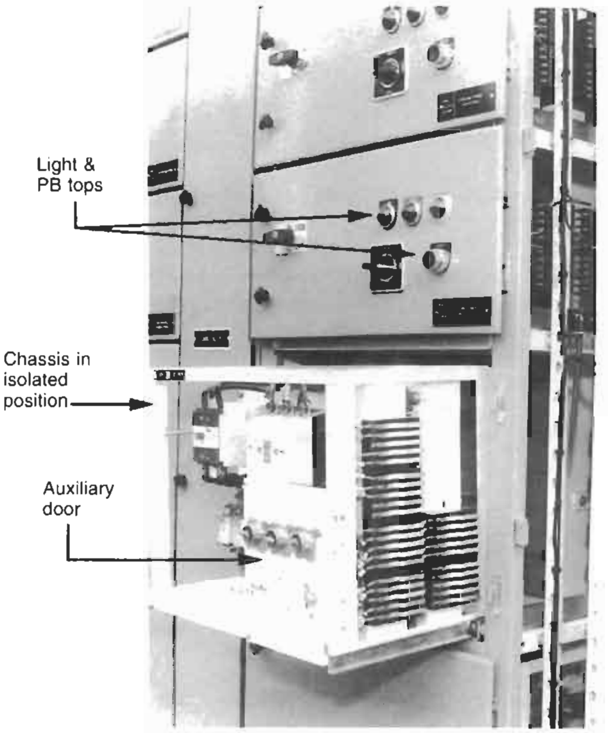

Figure 13.12(a) Part view of a typical fully drawout-type motor control centre (Courtesy: ECS)

construction eliminates human error and reduces racking time. The trolley can now be replaced swiftly with the least downtime.

13.4 Design parameters and service conditions for a switchgear assembly

13.4.1 Design parameters

A switchgear or a controlgear assembly will be designed to fulfil the following design parameters:

Rating
1 Rated voltage
2 Rated frequency
3 Rated insulation level
4 Rated continuous current rating and permissible temperature rise
5 Rated short-time current rating or fault level of a system (breaking current for an interrupting device)
6 Duration of fault
7 Rated momentary peak value of the fault current (making current for an interrupting device)

A switchgear assembly may be assigned the following ratings:

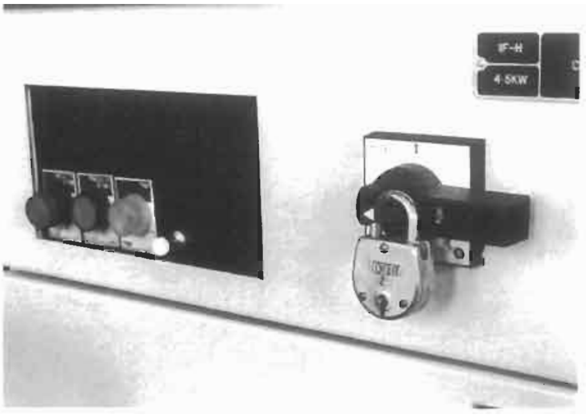

Padlocking of switch

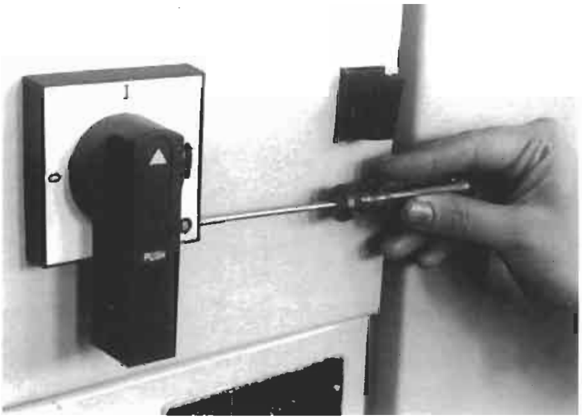

Door interlock defeat facility

Figure 13.12(b) Padlocking and defeat interlocking facilities

1 **Rated voltage** This should be chosen from Series I or Series II as shown in Table 13.1. Nominal system voltage is the normal voltage at which an equipment may usually have to perform. The maximum system voltage is the highest voltage level which the supply system may reach temporarily during operation and for which the equipment is designed.
2 **Rated frequency** 50 or 60 Hz (refer to Table 13.1).
3 **Rated insulation level** This will consist of
   - Power frequency voltage withstand level, according to Section 14.3.3 and
   - Impulse voltage withstand level for assemblies having a system voltage of 2.4 kV and above, according to Section 14.3.4.

Assigning the impulse level to an HT switchgear assembly

As discussed in Sections 17.5 and 23.5.1, an electrical network may be exposed to different voltages surges which may be internal or external. The extent of exposure of the connected equipment would determine its level of insulation. IEC 60071-1 has recommended the desired

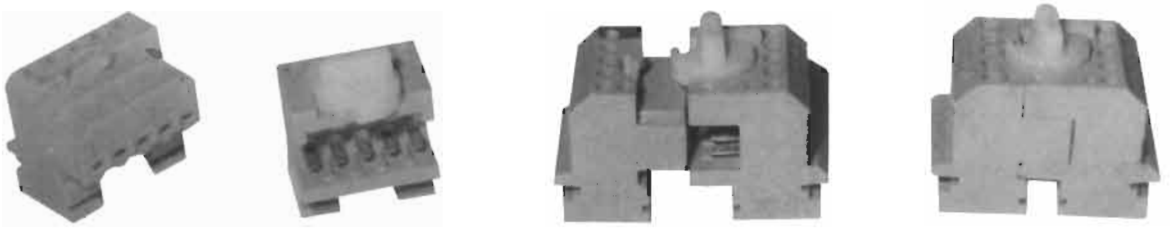

Female portion Male portion Terminals disengaged Terminals engaged

Figure 13.13(a) Typical plug-in-type terminals

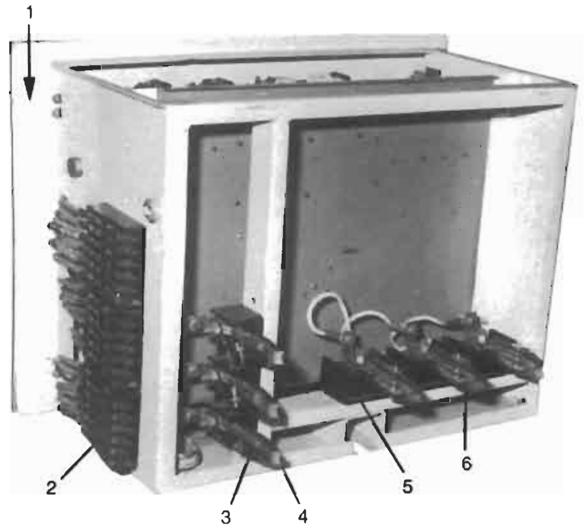

1. Trolley
2. Auxiliary contacts (sliding type)
3. Outgoing power contacts (female)
4. Outgoing power contacts (male)
5. Insulator
6. Incoming power contacts (female)

Figure 13.13(b) Rear view of a withdrawable chassis illustrating power and auxiliary contact details

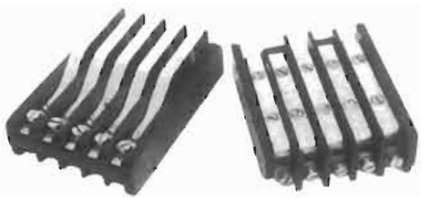

Auxiliary contacts

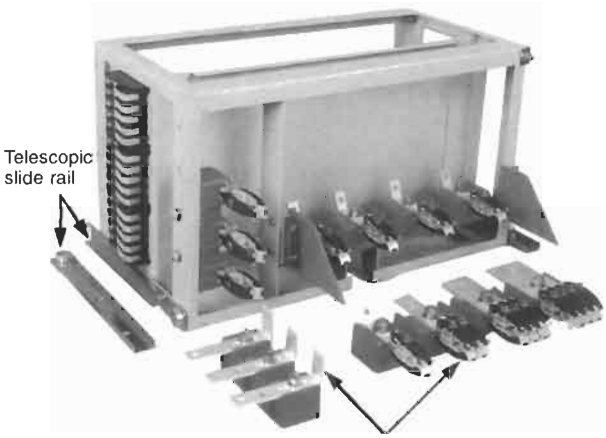

Power contacts

Figure 13.13(c) Drawout power and auxiliary (control) contacts

level of insulation for different system voltages and the extent of their exposure, as shown in Tables 13.2 and 13.3, for the HT switchgears installed in a distribution network. The recommended insulation levels will take account of the following aspects.

Indoor installations

For installations that are electrically non-exposed, internal surges and overvoltages may be caused by one or more of the following:

(a) At surge frequency

- Switching surges, as may be caused during the switching operation of an inductive circuit (Section 17.7.2) or a capacitive circuit (Section 23.5.1)
- Grounding overvoltages, as may be caused by a sudden ground fault on a phase in an isolated neutral system (Section 20.2.1)

(b) At power frequency

- Momentary overvoltages due to a sudden load rejection, which may overspeed the generator and develop higher voltages or
- Sustained overvoltages

All such installations are assigned the impulse voltages as in list I of Tables 13.2 and 13.3.

Outdoor installations

Installations that are electrically exposed to lightning are assigned the impulse voltages as in lists II or III of Table 13.2 or list II of Table 13.3, depending upon the extent of their exposure to lightning and the method of their neutral grounding.

Table 13.1 Rated voltages and frequencies for metal enclosed bus systems also applicable for switchgear assemblies

Series I		*Series II*	
Nominal system voltage	*Rated maximum system voltage*	*Nominal system voltage*	*Rated maximum system voltage*
		(ANSI C37-20C)	
kV	*kV*	*kV*	*kV*
0.415*	0.44	0.48	0.508
0.6*	0.66	0.60	0.635
3.3	3.6	4.16	4.76
6.6	7.2	7.2	8.25
11	12	13.8	15.0
15	17.5	14.4	15.5
22	24	23.0	25.8
33	36	34.5	38.0
44	52	69.0	72.5
66	72.5	–	–

For higher voltages – refer to Tables 13.2 and 13.3 for series I and IEC 60694 for series II.

Frequency: 50 or 60 Hz	Frequency: 60 Hz

Based on IEC 60694, BS 159 and ANSI C37-20C.

Notes

Series I: Based on the current practices adopted by India, Europe and several other countries. *These voltages have now been revised from 0.415 kV to 0.4 kV and from 0.6 kV to 0.69 kV as in IEC 60038.

Series II: Based on the current practices adopted in the USA and Canada.

List I

1 When the system is not directly connected to an overhead line, such as when connected through a transformer.
2 When the neutral of the system is grounded solidly or through a small impedance (Section 20.4).
3 When the system is provided with a surge protection.

List II or List III

1 When the system is connected to an overhead line.
2 When the neutral of the system is not solidly grounded.
3 When no surge protection is provided.
4 When the installation demands a high degree of security, such as in a generating station.

Note

IS 8084, however, has opted for list II for the busbar systems for all applications.

Although the rated values are based on experience and field data collected, sometimes these values may be exceeded in actual operation, due to changed service or weather conditions. It is, therefore, recommended to take cognisance of this fact and provide a surge protection to contain the surge voltages within the rated values of Tables 13.2 and 13.3. It is recommended that actual site tests be conducted on similar installations to ascertain the likely level of voltage surges that may occur during operation. To be on the safe side, it is recommended for outdoor installations, particularly, to contain the severity of the surge voltages, with the help of surge arresters, within the maximum assigned impulse voltages (BIL) of the equipment, considered in Tables 13.2 and 13.3, less the protective margins, for range I and range II voltage systems respectively.

Table 13.2 Standard insulation (impulse) Levels for Series 1 range I voltage systems (1 kV < V_m ≤ 245 kV)

Nominal system voltage[1] $V_{r.m.s.}$ kV(r.m.s.)	*Rated maximum system voltage V_m kV(r.m.s.)*	*Standard one-minute power frequency withstand voltage KV*(r.m.s.)*			*Standard lightning impulse (1.2/50 µs) withstand voltage phase to ground** kV* (peak)*		
		List I	*List II*	*List III*	*List I*	*List II*	*List III*
3.3	3.6	10	–	–	20	40	–
6.6	7.2	20	–	–	40	60	–
11	12	28	–	–	60	75	–
15	17.5	38	–	–	75	95	–
22	24	50	–	–	95	125	–
33	36	70	–	–	145	170	–
44	52	95	–	–	250	–	–
66	72.5	140	–	–	325	–	–
–	100	150	185	–	380	450	–
110	123	185	230	–	450	550	–
132	145	230	275	–	550	650	–
154	170	275	325	–	650	750	–
220	245	360	395	460	850	950	1050

Notes As in IEC 60071-1 and IEC 60694

* More than one lightning impulse insulation level is indicative of the extent of exposure of equipment to lightning surges. Correspondingly the power frequency withstand voltage can also be more than one.

** Lightning stress between the phases is not more than the lightning stress between a phase and the ground. For more details refer to IEC 60071-1.

[1] IEC 60071-1 has specified only V_m values. $V_{r.m.s.}$ is indicated based on the practices adopted by various countries.

Table 13.3 Standard insulation (impulse) levels for range II voltage systems (V_m > 245 kV)

Nominal system voltage	*Highest voltage for equipment* V_m	*Standard one-minute power frequency withstand voltage*	*Standard switching impulse (250/2500 μs) withstand voltage*			*Standard lightning impulse (1.2/50 μs) withstand voltage phase to ground*[2]
kV(r.m.s.)[1]	*kV(r.m.s.)*	*kV(r.m.s.)*[3]	*Phase to ground kV (peak)*[4]	*Ratio to the phase to ground peak value as in IEC 60071-1*	*Phase-to-phase kV (peak)*[5]	*kV (peak)*[4]
275	300	380	750	1.50	1125	950
			850	1.50	1275	1050
330	362	450	850	1.50	1275	1050
			950	1.50	1425	1175
400	420	520	950	1.50	1425	1300
			1050	1.50	1575	1425
–	550	620	1050	1.60	1680	1425
			1175	1.50	1760	1550
–	800	830	1300	1.70	2210	1800
			1425	1.70	2420	2100

Notes As in IEC 60071-1 and IEC 60694

[1] IEC 60071-1 has specified only V_m values. $V_{r.m.s.}$ is indicated based on the practices adopted by various countries.

[2] Lightning stress between the phases is not more than the lightning stress between a phase and the ground. For more details refer to IEC: 60071-1.

[3] These values are applicable for

- Type tests – phase to ground
- Routine tests – phase to ground and phase to phase.

[4] More than one lightning impulse insulation level is indicative of the extent of exposure of an equipment to lightning surges.

[5] These values are meant for type tests only.

4 Rated continuous current ratings and permissible temperature rise

The current ratings should generally be selected from series R-10 of IEC 60059 which comprises the following numbers;

1, 1.25, 1.6, 2, 2.5, 3.15, 4, 5, 6.3 and 8 etc. and their multiples in 10

e.g. for the number 1.25 the standard ratings may be; 1.25, 12.5, 125, 1250 or 12500A etc. IS 8084 has suggested the following ratings in amperes based on the above series:

100, 250, 400, 630, 800, 1250, 1600, 2000, 3150, 4000, 5000, 6300, 8000, 10000, 12500 and 15000 etc.

The temperature rise limits of the various parts of a switchgear assembly during continuous operation at the rated current must conform to the values in Tables 14.5 and 14.6.

Diversity factor

The connected load of an electrical installation is generally more than its actual maximum demand at any time. The reason is the liberal provisions made for loads that are to be used occasionally – spare feeders, maintenance power sockets and some reserve capacity available with most of the outgoing feeders. Moreover, some of the feeders may be operating underloaded. To design a switchgear assembly, particularly for its incoming feeder and the busbar ratings, based on the connected load would be neither economical nor prudent, and the protective scheme too would under-protect such a system.

Based on experience, IEC 60439-1 has suggested a multiplying factor, known as the 'diversity factor' as noted in Table 13.4. This factor depends upon the number of outgoing circuits and is defined by the ratio of the maximum loading on a particular bus section, at any time, to the arithmetic sum of the rated currents of all the outgoing feeders on that section (Figure 13.14). This factor also helps to determine the most appropriate and economical ratings of the main equipment, such as the transformer, cables or the bus system, associated switchgear and the protective devices (Example 13.1). The values of Table 13.4 are based on a general assumption, and may vary from one installation to another depending upon the system design, the derating factors considered and any other provisions made while choosing

Table 13.4 Conventional values of diversity factor

Number of main outlets	*Diversity factor*
2 to 3	0.8
4 to 5	0.7
6 to 9	0.6
10 and above	0.5

As in IEC 60439-1

the rating of a feeder (outlet), as noted above. It is therefore recommended that this factor be specified by the user, depending upon likely capacity utilization, to help the switchgear assembly manufacturer to design a more economical busbar system. In the absence of this, the factors as indicated in Table 13.4 may be applied.

Example 13.1

Consider the power distribution system of Figure 13.14, having the following feeder details:

I/C feeder, 4000A

$$\text{O/G feeders}\begin{cases}\text{1 No. 800 A = 800 A}\\ \text{7 Nos. 630 A = 4410 A and,}\\ \text{4 Nos. 400 A = 1600 A}\end{cases}$$

$\therefore$ Total connected feeder load = 6810 A
and diversity factor for 12 Nos. feeders as in Table 13.4 = 0.5

$\therefore$ Maximum loading on the incoming feeder or the main busbars at any time = 6810 × 0.5
= 3405 A

Accordingly we have selected the rating of the incoming feeder as 4000 A. 4000 A being the next standard rating after 3150A. The maximum loading on each vertical section is worked out in Figure 13.14. These ratings of vertical busbars are when the arrangement of busbars is to individually feed each vertical row. If one common set of busbars is feeding more than one vertical section, the rating of busbars can be further economized. But one must take cognisance that too many tapings from one section of the bus may weaken the bus system.

If two sections are joined together to have a common vertical bus system, say, Sections 3 and 4, then the rating of the common bus will be:

Total connected load = 2060 + 2230
= 4290 A

Diversity factor for 8 numbers of feeders = 0.6

$\therefore$ Maximum rating = 4290 × 0.6
= 2574 A
or say = 2500 A

as against 1600 A + 1800, i.e. 3400 A, worked out in Figure 13.14, when both the sections were fed from individual busbars.

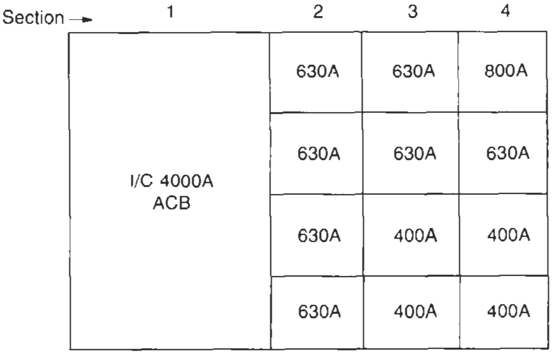

Total connected feeder load	2520A	2060A	2230A
Total connected load	← 6810A →		
Diversity factor as per Table 13.4	0.8	0.8	0.8
Maximum loading at any time	2016A	1648A	1784A
Recommended rating of busbar	2000A	1600A	1800A

Figure 13.14 Illustration of diversity factor

5 Rated short-time current rating or fault level of a system

To establish the fault level of a system

The fault level of an electrical network is the capacity of the source of supply to feed the faulty circuit, and is represented in kVA or MVA. Consider the simple transmission and distribution network of Figure 23.1, which is redrawn in Figure 13.15 for more clarity. This illustrates the impedances of the network at various points, and their role in the event of a fault. The impedance of a circuit is built through the self-impedances of the windings of the various machines in the circuit, generators, transformers and motors etc., and the impedances of the connecting transmission and distribution lines and the associated cables.

To increase the impedance of the network, a series resistor or reactor is sometimes used to contain the fault level of a system within a desirable limit. This may be required to make the selection of the interrupting device easy, and from the available range, without an extra cost for a new design as well as an economical selection of the interconnecting conductors and cables. Such a situation may arise on HV >66 kV or EHV >132. kV transmission networks, when they are being fed by two or more power sources, which may raise the fault level of the system to an unacceptable level. The cost of the interrupting device for such a fault level may become disproportionately high, and sometimes even pose a problem in availability.

Ground fault current is controlled by a method similar to that discussed in Section 20.4.2. The electricity authorities of a country generally provide the preferred fault levels, depending upon the availability of the interrupting devices. They also suggest the likely generation of overvoltages in a faulty circuit and the healthy phases on a ground fault as a result of grounding conditions, as guidelines to the system designers to design a transmission or a distribution network for various voltage systems. The guidelines may also recommend the

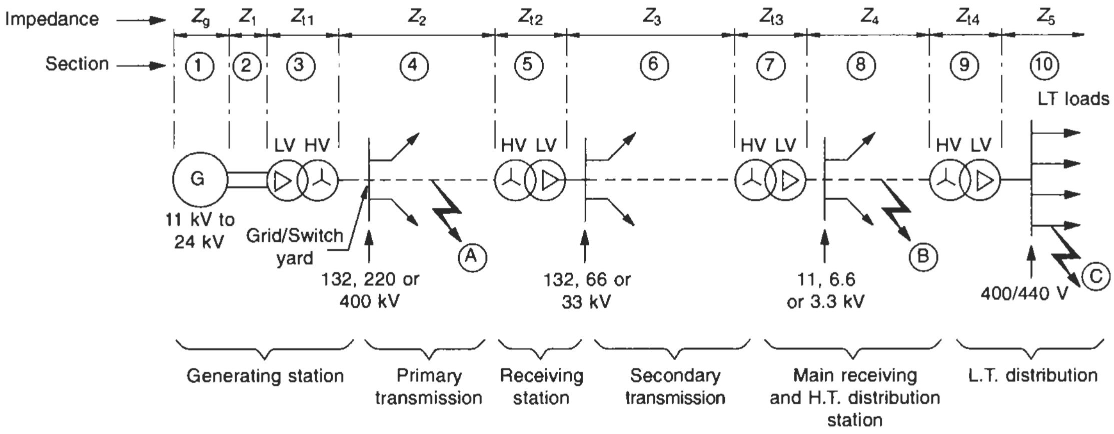

① Generator.

② Isolated phase bus system

③ EHV generator transformer

④ EHV transmission line

⑤ H.T. secondary transmission transformer

⑥ Secondary transmission line

⑦ H.T. distribution transformer

⑧ H.T. distribution network

⑨ L.T. distribution transformer

⑩ L.T. distribution network

(i) Fault at 'A' is calculated by impedance Z_{t1}
(ii) Fault at 'B' is calculated by impedance Z_{t3}
(iii) Fault at 'C' is calculated by impedance Z_{t4}

Note The actual fault at any point will be much lower than calculated with the above impedances Z_{t1}, Z_{t2}, Z_{t3} and Z_{t4} because other impedances from the source of supply (Transformers in the above case) up to the point of fault, are not considered while designing a system.

Figure 13.15 Typical layout of a typical transmission and distribution network and significance of circuit impedances at various points

maximum loading of a line and the maximum number of feeding lines that may be connected to a common grid, to limit the fault level of the system within the desirable limit. Some typical values are noted below:

Nominal system voltage	*Limiting fault level*	*No. of additional feeding lines*
765 kV	2500 MVA	Nil
400 kV	1000 MVA	5
220 kV	320 MVA	3
132 kV	150 MVA	2

For more details refer to Section 24.8. It is possible that in the course of time more generating stations may be installed to meet the rising demand for power. Their feeding lines too will be added to the existing grid to augment its capacity. This would also enhance the fault level of the existing system. To ensure that the prescribed fault level is not exceeded, a detailed network analysis may be carried out to determine the minimum possible impedance of the grid, at various vulnerable locations, to establish the likely revised fault level. If it is felt that it may exceed the prescribed limit, current-limiting series reactors may be provided at suitable locations to yet contain the fault level within the prescribed limits. For current limiting reactors refer to Chapter 27.

With the availability of more advanced interrupters in future, it will be possible to upgrade the present guidelines and permit connections of more feeding lines on an existing grid without having to resort to a series reactor.

Below, we analyse the likely fault levels of a system under different circuits and fault conditions for an easy understanding of the subject. It is a prerequisite to decide the level of fault, to select and design the right type of equipment, devices and components and the protective scheme for a particular network.

A power circuit is basically an R-L circuit. In the event of a fault, the system voltage ($V_m \sin \omega t$) may occur somewhere between $V = 0$ and $V = V_m$ on its voltage wave. This will cause a shift in the zero axis of the fault current, I_{SC}, and give rise to a d.c. component. The fault current will generally assume an asymmetrical waveform as illustrated in Figure 13.27.

The magnitudes of symmetrical and non-symmetrical fault currents, under different conditions of fault and configurations of faulty circuits, can be determined from Table 13.5, where Z_1 = Positive phase sequence impedance, measured under symmetrical load conditions. The following values may be considered:

Table 13.5 RMS values of fault currents under different conditions of fault in a power system

Sr. no.	Type of fault	Configuration of faulty circuit	Fault currents	
			Symmetrical	Unsymmetrical
1	3-Phase	(i) Star connected with isolated neutral 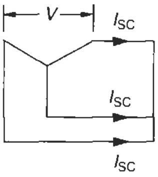	$\frac{V}{\sqrt{3}} \times \frac{1}{Z_1}$	–
		(ii) Delta connected 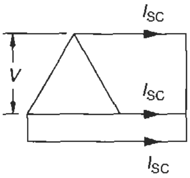	$\frac{V}{\sqrt{3}} \times \frac{1}{Z_1}$	–
2	Phase to phase	(i) Star connected with isolated neutral 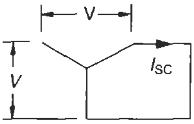	–	$\sqrt{3} \times \frac{V}{\sqrt{3}} \times \frac{1}{Z_1 + Z_2}$
		(ii) Delta connected 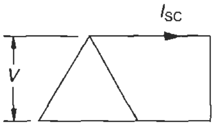	–	$\sqrt{3} \times \frac{V}{\sqrt{3}} \times \frac{1}{Z_1 + Z_2}$
3	Phase or phases to ground	(i) Star connected, solidly grounded 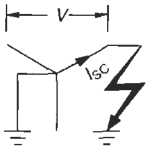	–	$\left(3^* \times \frac{V}{\sqrt{3}} \times \frac{1}{Z_1 + Z_2 + Z_0}\right)$
		(ii) Star connected, impedance grounded 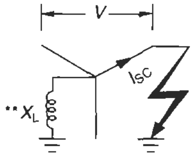	–	$\left(3^* \times \frac{V}{\sqrt{3}} \times \frac{1}{Z_1 + Z_2 + Z_0 + 3X_L{}^{**}}\right)$

Notes

* Refer to Section 20.6.2.

** When the neutral is impedance grounded, three times its impedance must be added to Z_0, in view that this impedance would fall in series with each phase.

1 It is equal to the phase impedance of the overhead lines or cables. For low current systems, LT or HT, this impedance is nearly equal to the resistance of the circuit, as $R >> X_L$. Due very low X_L, the impedance remains nearly the same even on a fault, as a result of very little change of flux, except the skin effect, which is moderate for moderate currents. Refer to the data sheets for sizes of cables and conductors provided in Chapter 16, Appendix 1, which shows that $R >> X_L$ for smaller ratings. For overhead lines, refer to Tables 24.1(a) and (b).

However, as the current rises, the situation changes gradually as a result of the proximity effect, which adds to the leakage flux of the circuit and diminishes its reactance and the impedance. The decrease in impedance contributes to limiting the fault level of the system. Refer to Table 30.7, which shows the gradual decrease in X_L with the current.

2 It is equal to the short-circuit impedance of transformers and motors. Now the machine undergoes a quick change of flux, due to a change in the applied voltage (it changes two peaks in one half of a cycle, Section 1.2.1). The impedance during a fault is therefore different from that during normal running. As standard practice, the fault impedance is provided in p.u. by the machine manufacturers. The content of R is now far too low, compared to X_L ($R << X_L$), as is the p.f. of the faulty circuit.

3 It is equal to the short-circuit impedance of the reactors.

4 It is equal to the sub-transient impedance (X_d'') of a generator as discussed later.

Note

Considering an HT system, the use of cables with any of the equipment against items 2 to 4, will hardly cause any reduction in the fault level of the system. The cables, irrespective of their lengths, contribute little to the impedance of the faulty circuit due to the negligible content of R compared to X_L of the equipment,

$$\because \; Z = \sqrt{R^2 + X_L^2}$$

and $R << X_L$

$$\therefore \; Z \simeq X_L$$

This small content of R, however, helps in dampening the $\mathrm{TRV_s}$ (transient recovery voltages) (Section 17.6.2).

Z_2 = Negative phase sequence impedance
Z_0 = Zero phase sequence impedance

These impedances are provided by the manufacturers by actual measurement. When these data are not readily available, the approximations, as indicated in Table 13.6, may be assumed to complete the design work. The relay settings for the actual protection may be made later.

As discussed above, it is usual practice to assume the highest fault level of a network by considering the least possible impedance of the faulty circuit such as the

Table 13.6 Approximate negative and zero phase sequence impedances compared to positive phase sequence impedances

Component	Z_1	Z_2	Z_0	
Generators	Z_1	$Z_2 < Z_1$ [≃ 60–80% of Z_1]	(Also refer to Section 20.10.1.)	$Z_0 << Z_1$ or Z_2 [≃ 25–40% of Z_1]
Motors	Z_1	$Z_2 < Z_1$ [≃ 60–80% of Z_1]		$Z_0 = \infty$
Overhead lines: (i) Single circuit	Z_1	$Z_2 = Z_1$	(i) Steel ground wire, (ii) Non-magnetic ground wire, (iii) No-ground wire,	$Z_0^* = 3.5 Z_1$ $Z_0^* = 2 Z_1$ $Z_0^* = 3.5 Z_1$
(ii) Double circuit	Z_1	$Z_2 = Z_1$	(i) Steel ground wire, (ii) Non-magnetic ground wire, (iii) No ground wire,	$Z_0^* = 5 Z_1$ $Z_0^* = 3 Z_1$ $Z_0^* = 5.5 Z_1$
Cables (i) 3-Core cables (ii) 1-Core cables	Z_1	$Z_2 = Z_1$		$Z_0 = 3$ to $5\ Z_1$ $Z_0 = 1.25\ Z_1$
Transformers	Z_1	$Z_2 = Z_1$	(i) 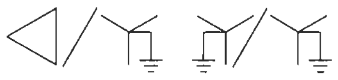	$Z_0 = Z_1$
			(ii) 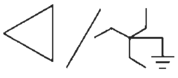	$Z_0 = Z_1$
			(iii) 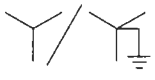	$Z_0 = 0.66\ Z_1$
			(iv) For other configurations	$Z_0 = \infty$
Reactors Capacitors	$Z_1 = X_L$** $Z_1 = X_C$**	$Z_2 = X_L$** $Z_2 = X_C$**		$Z_0 = X_L$** $Z_0 = X_C$**

* These values will vary with the spacings between the conductors and their current ratings.
** In both cases, the content of loss is low. The resistance r, being very small, is neglected.

Note The impedances marked on Figure 13.15 refer to positive phase sequence impedances only. Faults that are non-symmetrical alone would use negative or zero sequence impedances.

impedance of the source of supply alone and selecting the equipment and devices for the worst-case operating conditions. The highest impedance is considered when setting the protective relays to make them actuate even on the smallest fault (other than of a transitory nature).

Inferences from Table 13.6

Rotating machines
These have $Z_2 < Z_1$ and

$$Z_0 << Z_1 \text{ or } Z_2$$

Therefore, the level of phase-to-phase asymmetrical faults will be generally of the same order as the three-phase symmetrical faults. The ground faults, however, will be higher than the symmetrical faults. Special care therefore needs be taken while grounding a generator, when they are solidly grounded, particularly to limit the ground fault currents See also Section 20.10.1.

Other than rotating machines
For all stationary equipment such as transmission lines, transformers, reactors and cables.

$Z_2 = Z_1$ and $Z_0 \geq Z_1$

Therefore the level of three-phase symmetrical faults will be the highest compared to a phase-to-phase or a ground fault and the system design may be based on the symmetrical fault level.

A transformer is not a source of supply (it only transforms one voltage to another) but it is considered so, in terms of fault level calculations. In fact, it provides a means to add to the impedance of a circuit on the lower voltage side, and limits the fault level of the network to which it is connected. One will appreciate that the capacity of the actual source of supply, on the higher voltage side, will be much larger. On the LV side it is controlled by the impedance of the transformer. It is customary to consider this impedance to determine the fault level on the LV side. The fault level is measured as the dead short-circuit at the transformer LV side terminals, and this level is then assigned as the fault level for the connected bus system and the switchgear assemblies.

The philosophy to assume the impedance of the source of supply (generator or a transformer) as the impedance of the faulty circuit may be far from reality and may give a very high fault current. In actual operation, the fault intensity may be far less, as every device and component connected in the circuit will tend to add to the effective impedance of the faulty circuit and limit the magnitude of the fault current. Figure 13.15 also subscribes to this theory. But it is customary to design the systems for the worst fault conditions which, in all likelihood, may not arise, and decide the protective scheme and the current settings of the protective relays for the minimum possible fault current.

To establish the minimum fault level, impedances of the feeding lines from the source of supply up to a selected point, at which the fault level is to be determined, must be added. For a step-by-step calculation to arrive at such a fault level refer to IEC 60909 and the literature on the subject as well as the references at the end of this chapter.

Example 13.2
Consider a 1500 kVA, 11 kV/415 V transformer designed especially to have a unit impedance of 7.5%:

$$\therefore \quad I_r = \frac{1500 \times 1000}{\sqrt{3} \times 415} \text{ A}$$

$$\simeq 2087 \text{ A}$$

$$\therefore \quad I_{SC} = \frac{2087}{0.075} \text{ A} \qquad \text{(refer to equation (13.5))}$$

$$\simeq 27.83 \text{ kA}$$

The prescribed system standard fault level nearest to it, as per Table 13.7 = 35 kA

$$\text{and in MVA} = \sqrt{3} \times 415 \times 35 \times 10^{-3} \text{ MVA}$$

$$\simeq 25 \text{ MVA}$$

Table 13.7 For an LT system: typical fault levels on the LV side of a transformer

Transformer rating	I_r *at 415 V*	*Likely short-circuit impedance of a transformer as in IEC 60076-1*	*Fault current* I_{sc} *at 415 V* $(I_r/\text{unit } Z_p)$	*Fault level* $[\sqrt{3} \,.\, V_r \,.\, I_{sc}]$	*Standard 1-second systems in practice*		
MVA	*Amps. (r.m.s.)*	Z_p *%*	*kA (r.m.s.)*	*MVA at 415 V*	*kA (r.m.s.)*	*MVA at 415 V*	
0.5	696	4.5	15.47	11.0	25	18	Preferred ratings
0.75	1043	5.0	20.86	15.0			
1.00	1391	5.0	27.82	20.0			
1.25	1739	5.0	34.78	25.0	35	25	
1.50	2087	6.25	33.39	24.0			
2.00	2783	6.25	44.53	32.0	43	31	
*2.50	3478	6.25	55.65	40.0	50	36	Non-preferred rating

Note With the availability of modern circuit breakers with higher short-time ratings of 65 kA/80 kA/100 kA, it is now possible to use even larger transformers up to 2500 kVA, depending upon their other merits.

This is a simple calculation to determine the maximum symmetrical fault level of a system, to select the type of equipment, devices and bus system etc. But to decide on a realistic protective scheme, the asymmetrical value of the fault current must be estimated by including all the likely impedances of the circuit.

Fault levels of an LT system

Table 13.7 suggests some standard ratings of the distribution transformers, their full load current on the LV side and the corresponding fault level, considering an average impedance according to IEC 60076-1. Referring to transformers of 2500 kVA and above, the fault current, assuming an impedance of 6.25%, will work out to more than 50 kA. The LT protective systems, as normally designed and manufactured, are suitable for a fault level up to 50 kA or so (also see Table 13.7 and the note). It is, therefore, recommended that the size of the transformers for the LT distribution may be chosen, as far as possible, up to 2000 kVA. For large industrial and other LT loads, the practice is to choose more than one transformer of smaller ratings, to cater for the required load, rather than one transformer of larger capacity. In the same context, when more than one transformer are used to feed a large industrial load, distribution of the load must also be done in as many sections as the number of transformers. The parallel running of any two of the transformers must be avoided, even when they are suitable for a parallel operation and the source of supply is also the same. Otherwise the impedances of all the transformers that may be running in parallel would also fall in parallel. It will reduce the effective impedance of the faulty circuit, and multiply the system fault level. Use of current limiting reactors on LT systems is not a recommended practice, for reasons of relatively much higher losses of the reactor, compared to the power handled by it. A few typical, but generally adopted, distribution networks are illustrated in Figures 13.16 and 13.17.

Another factor that may discourage the use of higher ratings of transformers is the need to run a number of cables in parallel, to cater for such high currents. It may prove to be cumbersome, besides requiring a very high derating of the cables. Even the design of such large ratings of bus systems and their high eddy and magnetizing space currents would call for highly skilled engineering. A single large transformer will also provide less flexibility to the system. A fault in this transformer or its shutdown for a normal maintenance will result in the shutdown of the whole installation. However, a single large transformer has its own merits also. The user may evaluate which system would suit him the best and decide the rating accordingly.

Fault level of a system under cumulative influence of two power sources

Short-time rating of the tap-offs

It is possible that in certain installations as a result of system needs it may not be possible to limit the fault level of the system within a desirable limit. A power-generating station, connected to an external grid, to

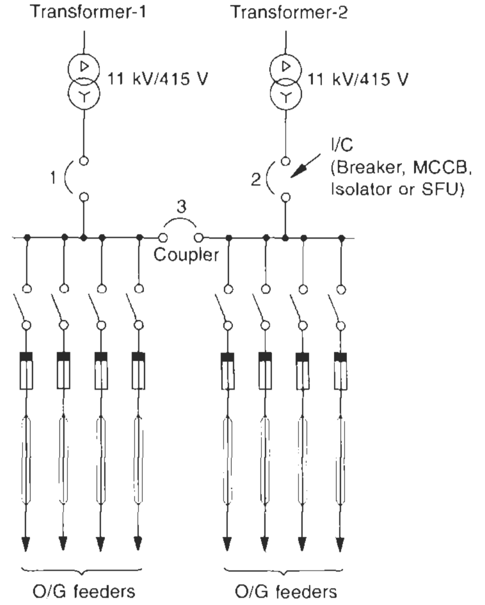

Caution
The configuration represents scheme of two incomings and one bus coupler. To avoid parallel operation, only two of these must be 'ON' at a time.

Figure 13.16 Interlocking requirements

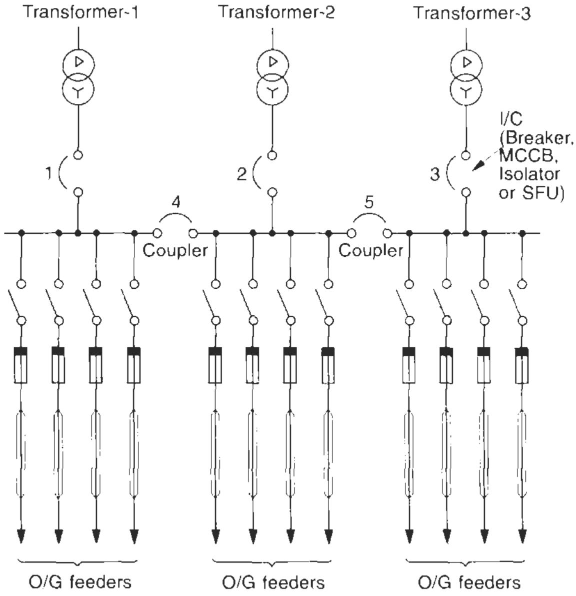

Caution
The configuration represents scheme of three incomings and two bus couplers. To avoid parallel operation, only three of these five must be 'ON' at a time.

Figure 13.17 Interlocking requirements augment the capacity of the power network is one example. Figure 13.21 (described later) illustrates a typical electrical layout of a power-generating station where the generator G is connected to an external grid. The generator voltage is normally much lower than the voltage of the external grid. It is therefore connected to the grid through a step-up generator transformer GT. The fault level of the grid on the generator side is thus governed by the impedance of the GT. In the event of a fault on this section, say at the bus section connecting G with GT, one side of it will be fed by the G and the other by the GT. Thus, no part of this section would carry a fault current of more than one source at a time. The main interconnecting bus system between G and GT may therefore be designed for a fault level, whichever is the higher of the two sources.

Through the tap-offs of the bus, the unit auxiliary transformers (UATs) are connected to feed the station auxiliary services. For more clarity we have taken out the portion of the tap-offs from Figure 13.21 and redrawn it in Figure 13.18 to illustrate the above system and its interconnections. The tap-offs are now subject to the cumulative influence of the two supply sources. In the event of a fault on this section, both the sources would feed the same and the fault current through the tap-offs would add up. The tap-offs should thus be designed for the cumulative effect of both fault levels. For the sake of an easy reference, Table 13.8 suggests a few typical values of fault currents, worked out on the basis of data considered for the G and GT. One such example is also worked out in Example 13.3.

Impulse level of the tap-offs

These sections should also possess a higher level of insulation, as prescribed in Table 32.1A.

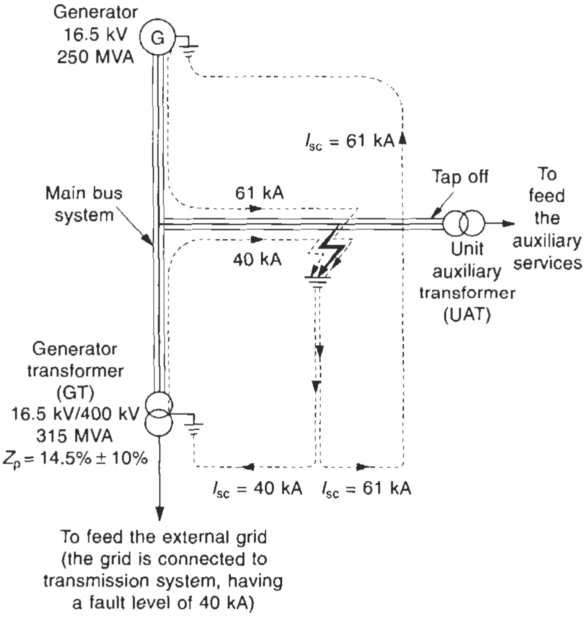

Figure 13.18 Fault level of tap-offs of a bus system under cumulative influence of two power sources

Example 13.3

Consider a generator G of 250 MVA, 16.5 kV having a fault level of 61 kA and the generator transformer GT of 315 MVA, 16.5 kV/400 kV having an impedance of 14.5 ± 10% (Table 13.8, Figure 13.18)

∴ full load current of GT,

$$I_r = \frac{315}{\sqrt{3} \times 16.5} \text{ kA}$$

and fault current from equation (13.5)

$$I_{sc} = \frac{315}{\sqrt{3} \times 16.5} \times \frac{1}{0.145 \times 0.9}$$

where Z_P is considered with the lower tolerance, i.e. 14.5%–10%, to obtain the maximum level of fault current to design the system.

$\therefore I_{sc} \simeq 84$ kA

But the GT is connected to a power grid and the grid to a transmission system. If we consider the fault level of the transmission system as 40 kA, as in Table 13.10, then the maximum fault that can occur on the LV side of the GT will be governed by the fault level of the transmission system (40 kA) and not the GT (84 kA).

Accordingly, the fault level for which the tap-offs should be designed,

= 61 + 40

= 101 kA

and momentary current

= 101 × 2.5 (Table 13.11)

= 252.5 kA

One-minute power frequency withstand voltage from Table 32.1A.

(i) For main interconnecting bus between G and GT – 50 kV
(ii) For the tap-offs – 55 kV

Note

For guidance on short-circuit calculations refer to IEC 60909.

Fault level of a generator circuit

The condition of a fault on a generator is similar to a fault in an R–L series circuit, as noted in Table 13.5, except for the effect of armature reaction and variation in the field current. The current waveform of a generator under a fault condition, therefore, becomes modified as a result of armature reaction. Since the flux crossing the air gap during a short-circuit in the first few cycles is large, the reactance is the least and short-circuit current the highest. This current is termed the sub-transient symmetrical fault current (I_{SSC}). The impedance at the instant of the short-circuit that determines this current is termed the sub-transient reactance X_d''. The r being too little, it is normally ignored. I_{SSC} exists in the system for just three or four cycles, depending upon its rate of decay, which is a function of I_{SSC}/I_r. The design parameters must ensure that its peak value including the d.c. component ($\sqrt{2} \times I_{SSC}$) does not exceed 15 times the peak rated current ($15 \times \sqrt{2} \cdot I_r$ or $21 \cdot I_r$ as in IEC 60034-1). It corresponds to the current of the first peak.

Table 13.8 Typical parameters of a power generating station and its likely fault levels

1 Generator								
Generator size (rated MVA × p.f.)	MW	60	67.5	110	120	200/210	250	500
Approximate sub-transient unit reactance,	$X_d''(\%)$	15.4	17.7	15.9	13.2	16.8	16.9	17.2
Rating	MVA	75	84.4	137.5	141.2	247	294	588
Generator fault level, $I_{SC} = \left(\frac{I_r}{\text{p.u.}\, X_d'}\right)$	kA	25.56	26.21	45.39	58.94	53.87	60.89	94.17
$[\sqrt{3} \times V_r \times I_{SC}]$	MVA	487	477	865	1072	1470	1740	3425
Rated p.f.		0.8	0.8	0.8	0.85	0.85	0.85	0.85
Stator nominal voltage, V_r	kV	11	10.5	11	10.5	15.75	16.5	21
Stator current (CMR)[a], I_r	A	3936	4639	7217	7780	9050	10 290	16 200
Frequency, f	Hz	50	50	50	50	50	50	50
2 Generator transformer (GT)								
Rating	MVA	75	85	140	140	250	315	600
Impedance	$Z_p\%$	12.5± 10%	12.5± 10%	12.5± 10%	12.5± 10%	14± 10%	14.5± 10%	15± 10%
Generator side fault level, considering the lower tolerance of impedance,	kA[b]	35	42	65	68	73	84	122
Vector group		← Star/delta (Ynd 11) →						
Type		← Three-phase, two winding →						One-phase two-winding, 3 Nos 200 MVA each
3 Generator isolated phase bus duct								
Rated current (CMR)[a]	A	4000	5000	8000	8000	10000	12500	18000
One second short-time rating (as for GT)[b]	kA	35	42	65	68	73	84	122
4 Tap-offs of the generator bus duct								
Approximate one-second kA short-time rating (rounded off)[b] (it is the summation of the fault levels of the generator and the generator bus duct: refer to Figure 13.18 and a typical calculation in Example 13.3)		61	68	110	127	127	145	216
5 Unit auxiliary transformer (UAT)								
No. of transformers		1	1	1	1	1 or 2	1 or 2	2
Rating	MVA	8	8	12.5	16	25 for 1 and 12.5 for 2	31.5 for 1 and 16 for 2	2 of 25 or 2 of 31.5
Impedance	$Z_p\%$	7	7	7.5	7.5	10 for 25 MVA 7.5 for 12.5 MVA	10 for 31.5 MVA 7.5 for 16 MVA	10 for 25 MVA 10 for 31.5 MVA
Vector group type		← Dyn1 or Ddo → ← 3-phase, 2 winding →						

[a] CMR – Continuous maximum rating

[b] The GT HV side is connected to a power grid and the grid receives power from many sources and can have a fault level higher than that of G or the GT. On a fault anywhere in the main length or the tap-offs of the IPB between G and the GT (Figures 13.21 and 13.18 respectively) both generator and the grid will feed the fault (grid through the GT). The fault level of the IPB straight length may therefore be considered as the fault level of the grid limited upto the fault level of the GT (impedance of GT limiting the fault level). Accordingly we have considered the fault level of the straight length of the IPB as the fault level of the GT. It is, however, only for illustration, exact fault level shall depend upon the system parameters, also refer to Example 13.3 clarifying this.

Source NTPC and BHEL.

These reactances are measured by creating a fault, similar to the method discussed in Section 14.3.6. The only difference now is that the fault is created in any of the phases at an instant, when the applied voltage in that phase is at its peak, i.e. at V_m, so that the d.c. component of the short-circuit current is zero and the waveform is symmetrical about its axis, as shown in Figure 13.19,

where,

(i) CL – defines the sub-transient state and

$$I_{\text{SSC(r.m.s.)}} = \frac{OC}{\sqrt{2}} = \frac{1}{\sqrt{2}} \times \frac{V_m}{\sqrt{3}\cdot X_d''} = \frac{V_l}{\sqrt{3}\cdot X_d''}$$

and the magnitude of the first peak can be defined by

$$I_M = \sqrt{2}\cdot I_{\text{SSC(r.m.s.)}}$$

(ii) BL – defines the transient state and

$$I_{\text{t(r.m.s.)}} = \frac{OB}{\sqrt{2}} = \frac{1}{\sqrt{2}} \cdot \frac{V_m}{\sqrt{3}\cdot X_d'} = \frac{V_l}{\sqrt{3}\cdot X_d'}$$

The short-time current, I_{SC} (1 or 3 seconds), of the system to which this machine would be feeding is defined by I_{tm}.

$$\therefore\ I_{sc} = \sqrt{2}\cdot I_t$$

(iii) AA' – defines the steady-state condition and

$$I_{\text{st(r.m.s.)}} = \frac{OA}{\sqrt{2}} = \frac{1}{\sqrt{2}} \cdot \frac{V_m}{\sqrt{3}\cdot X_d} = \frac{V_l}{\sqrt{3}\cdot X_d}$$

and

X_d'' = sub-transient state symmetrical reactance – Ω/phase
The maximum value of this reactance will depend upon the voltage regulation grade and is specified in BS 4999–140, for different grades.

X_d' = transient state symmetrical reactance – Ω/phase.
Since the interrupter will take at least three or four cycles to operate from the instant of fault initiation, it is this transient reactance that is more relevant for the purpose of short-circuit calculations.

X_d = Steady-state symmetrical (synchronous) reactance – Ω/phase.

r = series resistance of the generator, being too small, 0.5–10% of the sub-transient reactance, i.e. $r << xd''$, is normally ignored for ease of calculation.

V_l = Generator line voltage-volts

$I_{\text{SSC (r.m.s.)}}$ = sub-transient state short-circuit current, occurring for only three or four cycles. It is the initial symmetrical short-circuit current, and serves as the basis of calculation for the peak asymmetrical short-circuit current or the making current, I_M, of an interrupting device.

$I_{\text{t (r.m.s.)}}$ = transient state short-circuit current. It is used to determine the breaking current, I_{SC}, of an interrupting device and its heating effect.

$I_{\text{st (r.m.s.)}}$ = steady-state continuous short-circuit current after the transient stage. It may be slightly higher than the rated current (I_r) of the machine, due to small d.c. components, which may still be present in the system.

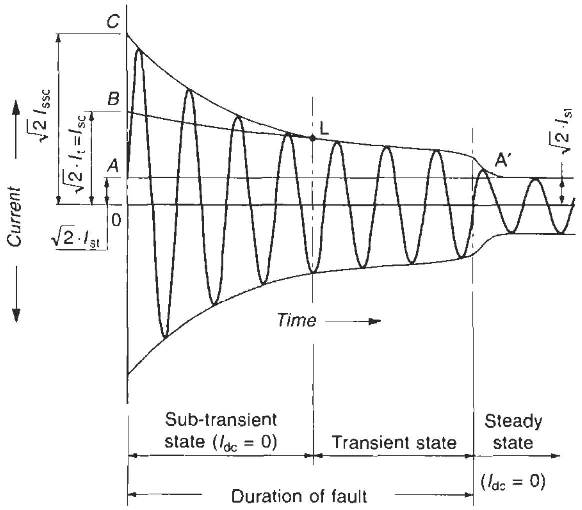

Symmetrical fault current at V_{max}, when I_{dc} = 0

Figure 13.19 Short-circuit oscillogram of a generator

Per unit (p.u.) values

In normal practice these parameters are provided on a per unit (p.u.) basis only where

$$X_b = \frac{V_l}{\sqrt{3}\cdot I_r}\ \Omega/\text{phase}$$

X_b – may be any chosen base reactance

$$\text{and } X(\text{p.u.}) = \frac{X}{X_b}$$

$$= 3\cdot\frac{X\cdot(\text{base kVA})\cdot 1000}{(\text{base } V_l^2)} \times 100\%\ \text{etc.}$$

(see equation (13.3))

The magnitudes of fault currents under different conditions of fault are analysed in Table 13.9. Figure 14.5 has been redrawn in Figure 13.20 for a generator circuit illustrating the sub-transient, transient and steady-state currents on an actual fault. The curve depicts the most severe fault condition which occurs when the circuit voltage is the minimum, i.e. at V_0, causing the maximum asymmetry and the associated d.c. component.

Example 13.4

The generator of a 1000 kVA, 415 V, 3 ϕ DG set has the following reactances:

X_d = 0.17 Ω/phase

Table 13.9 Fault currents (r.m.s.) in a generator circuit under different fault conditions

Sr. no.	*Type of fault*	*Configuration of faulty circuit*	*Fault currents*		
			Sub-transient $I_{\text{SSC(r.m.s.)}} = \frac{I_M}{\sqrt{2}}$	*Transient* $I_{\text{t(r.m.s.)}} = \frac{I_{SC}}{\sqrt{2}}$	*Steady state* $I_{\text{st(r.m.s.)}} \simeq I_r$
1	Three-phase	(i) Star connected 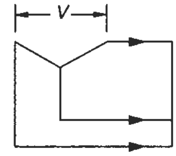	$\frac{V_l}{\sqrt{3}}\cdot\frac{1}{X''_d}$	$\frac{V_l}{\sqrt{3}}\cdot\frac{1}{X'_d}$	$\frac{V_l}{\sqrt{3}}\cdot\frac{1}{X_d}$
		(ii) Delta connected 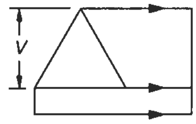	$\frac{V_l}{\sqrt{3}}\cdot\frac{1}{X''_d}$	$\frac{V_l}{\sqrt{3}}\cdot\frac{1}{X'_d}$	$\frac{V_l}{\sqrt{3}}\cdot\frac{1}{X_d}$
2	Phase to phase	(i) Star connected 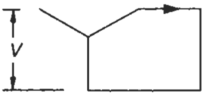	$\sqrt{3}\cdot\frac{V_l}{\sqrt{3}}\cdot\frac{1}{X''_d+x_2}$	$\sqrt{3}\cdot\frac{V_l}{\sqrt{3}}\cdot\frac{1}{X'_d+x_2}$	$\sqrt{3}\cdot\frac{V_l}{\sqrt{3}}\cdot\frac{1}{X_d+x_2}$
		(ii) Delta connected 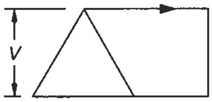	$\sqrt{3}\cdot\frac{V_l}{\sqrt{3}}\cdot\frac{1}{X''_d+x_2}$	$\sqrt{3}\cdot\frac{V_l}{\sqrt{3}}\cdot\frac{1}{X'_d+x_2}$	$\sqrt{3}\cdot\frac{V_l}{\sqrt{3}}\cdot\frac{1}{X_d+x_2}$
3	Phase or phases to ground	(i) Solidly grounded 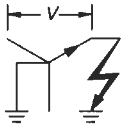	$3\cdot\frac{V_l}{\sqrt{3}}\cdot\frac{1}{X''_d+X_2+x_0}$	$3\cdot\frac{V_l}{\sqrt{3}}\cdot\frac{1}{X'_d+x_2+x_0}$	$3\cdot\frac{V_l}{\sqrt{3}}\cdot\frac{1}{X'_d+x_2+x_0}$
		(ii) Impedance grounded 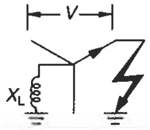	$3\cdot\frac{V_l}{\sqrt{3}}$ $\times\frac{1}{(X''_d+x_2+x_0+3X_L)}$	$3\cdot\frac{V_l}{\sqrt{3}}$ $\times\frac{1}{(X'_d+x_2+x_0+3X_L)}$	$3\cdot\frac{V_l}{\sqrt{3}}$ $\times\frac{1}{(X'_d+x_2+x_0+3X_L)}$

Notes

1 The above are r.m.s. values. For peak values multiply them by $\sqrt{2}$.

2 The first peak with full asymmetry, i.e. the making current I_M, will be represented by $\geq (P \times I_{ssc})$ (where P = factor of asymmetry as in Table 13.11).

3 x_2 and x_0 are negative and zero phase sequence reactances of the generator respectively, in Ω/phase.

4 Since the ground fault currents in generators can be higher (Section 20.10.1) than the sub-transient state current, special care need be taken while grounding a generator to limit the ground fault current. Section 20.10.1 covers this aspect also.

5 The relays and the breaker will operate only during the transient state, hence the significance of transient state values to set the current and the time of the protective and isolating devices.

6 In certain cases, where a long delay may be necessary for the protective scheme to operate, it may be desirable to use the maximum steady-state short-circuit current $\sqrt{2}\cdot I_{st}$ for a more appropriate setting, rather than the maximum transient current $\sqrt{2}\cdot I_t$, as by then the fault current will also fall to a near steady-state value, $I_{\text{st(r.m.s.)}}$.

X'_d = 0.04 Ω/phase
X''_d =0.02 Ω/phase
X_2 = 0.015 Ω/phase
X_0 = 0.007 Ω/phase

$$I_r = \frac{1000 \times 1000}{\sqrt{3} \times 415}$$

= 1391 A

and base reactance

$$X_b = \frac{415}{\sqrt{3} \times 1391}$$

= 0.17 Ω/phase

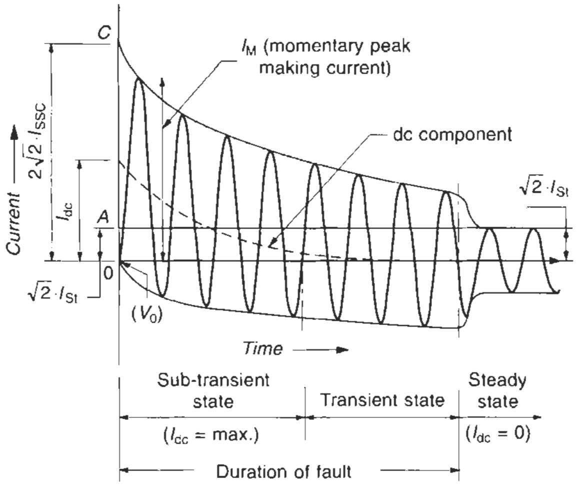

Fault current with highest asymmetry at V_0, when I_{dc} is the maximum.

Figure 13.20 Short-circuit oscillogram of a generator

∴ the corresponding unit reactances for the above per phase reactances will be $\left\{X = \frac{X_d}{X_b}\right\}$

$X_d = 1.0$ or 100%
$X'_d = 0.235$ or 23.5%
$X''_d = 0.117$ or 11.7%
$X_2 = 0.088$ or 8.8%
$X_0 = 0.04$ or 4.0%

and the symmetrical fault currents will be

(i) Sub-transient current

$$I_{\text{SSC r.m.s.}} = \frac{415}{\sqrt{3} \times 0.02}$$

$$= 11.98 \text{ kA}$$

and the magnitude of the first peak, including the d.c. component;

$$I_M = \sqrt{2} \times 11.98$$

$$= 16.94 \text{ kA}$$

(ii) Transient current

$$I_{\text{t r.m.s.}} = \frac{415}{\sqrt{3} \times 0.04}$$

$$= 5.99 \text{ kA}$$

and short-time current, $I_{SC} = \sqrt{2} \times 5.99$

$$= 8.47 \text{ kA}$$

(iii) The factor of asymmetry

$$= \frac{\text{Magnitude of the first peak current } (I_M)}{\text{Maximum transient current } 2\sqrt{I_t} \text{ (or } I_{SC})}$$

$$= \frac{16.94}{8.47}$$

= 2, which is the same as given in Table 13.11

(iv) Steady-state short-circuit current

$$I_{\text{st r.m.s.}} = \frac{415}{\sqrt{3} \times 0.17}$$

$$= 1.41 \text{ kA}$$

which is almost equal to the full load current (I_r). The small difference is due to d.c. component.

Selection of bases

A power system is connected to a number of power supply machines that determine the fault level of that system (e.g. generators and transformers). The impedances of all such equipment and the impedances of the interconnecting cables and overhead lines etc. are the parameters that limit the fault level of the system. For ease of calculation, when determining the fault level of such a system it is essential to consider any one major component as the base and convert the relevant parameters of the other equipment to that base, for a quicker calculation, to establish the required fault level. Below we provide a few common formulae for the calculation of faults on a p.u. basis. For more details refer to a textbook in the references.

$$\text{p.u.} = \frac{\text{Actual quantity}}{\text{Chosen base}} \tag{13.1}$$

p.u. = per unit quantity of V, I or Z_1 (fault impedance) (e.g. for a base impedance of 10 Ω, 5 Ω will be 5/10, i.e. 0.5 p.u. or 50%)

$$kVA = \frac{\sqrt{3} \cdot V \cdot I}{1000} (V \text{ is in volts})$$

$$I = \frac{kVA}{\sqrt{3} V} \times 1000 \text{ A}$$

$$\text{and } Z_1 = \frac{V}{\sqrt{3}} \cdot \frac{1}{I}$$

$$= \frac{V^2}{kVA \times 1000} \ \Omega \tag{13.2}$$

If Z_p is the p.u. impedance then

$$Z_p = \frac{\text{Actual impedance } (Z_1)}{\text{Chosen base impedance } (Z_b)}$$

where

$$Z_b = \frac{\text{Base } V^2}{\text{Base } kVA \times 1000}$$

$$\therefore Z_p = \frac{Z_1 \cdot (\text{base } kVA) \times 1000}{\text{Base } V^2} \text{ etc.} \tag{13.3}$$

If Z_{p1} = p.u. impedance at the original base, and
Z_{p2} = p.u. impedance at the new base,

then

$$Z_{p2} = Z_{p1} \left(\frac{V_1^2}{kVA_1} \times \frac{kVA_2}{V_2^2} \right) \tag{13.4}$$

where suffixes 1 and 2 refer to the original and the new base values respectively.

$$\text{Fault current } I_{SC} = \frac{I_r}{Z_p} \text{ i.e. } \frac{\text{rated current}}{\text{short-circuit unit impedance}} \tag{13.5}$$

$$\text{and fault MVA} = \frac{\text{base MVA}}{Z_p} \text{ etc.} \tag{13.6}$$

Fault levels of HT systems

We illustrate a typical powerhouse generation and transmission system layout in Figure 13.21, and reproduce in Table 13.10 the typical fault levels of different transmission and distribution networks in practice for different voltage systems.

We also provide a brief reference to a protective scheme, usually adopted in a large power-generating station as in Section 16.8.2.

6 Duration of fault

We have mentioned two systems, 1 second and 3 second. A choice of any of them would depend upon the location and the application of the equipment and criticality of the installation. Generally speaking, it is only the one-second system that is in practice. The three-second system may sometimes be used for low fault level networks, where $\sqrt{3} \cdot I_{SC}$, would fall within the capability of the available interrupting devices and at reasonable cost.

7 Rated momentary peak value of the fault current

A fault current on a power system is normally asymmetrical as discussed next, and is composed of a symmetrical a.c. component $I_{SC(r.m.s.)}$ and an asymmetrical sub-transient d.c. component I_{dc} (Figure 14.5). The forces arising out of I_{SC} are referred to as electromagnetic and those by asymmetry, i.e. I_{dc} as dynamic. The cumulative effect of this is electrodynamic and is quite significant. It requires adequate care while designing a current-carrying or supporting system. Switching devices and other current-carrying components and their mounting structures, such as the busbar systems in a PCC, MCC or a bus duct etc. must withstand such stresses during a short-circuit. It is therefore of vital importance to take account of this asymmetry and to determine this to form an important design parameter for switching devices and all current-carrying systems.

Table 13.10 Typical fault levels for an integrated transmission and distribution network

Nominal system voltage *kV*(r.m.s.)	*Highest system voltage* *kV* (r.m.s.)	*Symmetrical interrupting current rating* (r.m.s.) *kA I_{SC}*	*Minimum momentary current peak for dynamic rating* *kA(peak)*
765	800	40	100
400	420	40	100
220	245	31.5/40	79/100
132	145	25/31	62.5/77.5
33	36	25	62.5
15/24kV*	–	–*–	–*–
11	12	40	100
6.6	7.2	40	100
3.3	3.6	40	100
0.415	0.44	43/50	90.0/105

*Since this represents the generator voltage, therefore the fault level will be governed by the generator and the generator transformer as indicated in Table 13.8.

The peak value of a fault current will depend upon the content of the d.c. component. The d.c. component will depend upon the p.f. of the faulty circuit and the instant at which the short-circuit commences on the current wave. (Refer to Figure 13.27, illustrating the variation in asymmetry with the p.f. of the faulty circuit. For ease of application, it is represented as a certain multiple of the r.m.s. value of the symmetrical fault current I_{SC}.)

The content of asymmetry may decay quickly and may exist in the system for just three or four cycles from the commencement of the fault, depending upon the time constant, τ, of the circuit. The time constant, τ, is the measurement of the rate of decay of the d.c. component, and is the ratio of the system reactance, *L*, to the system resistance *R*, i.e. L/R. A large L/R will indicate a high time constant and a slow rate of decay and vice-versa, as illustrated in Figure 13.22. The asymmetry is therefore measured by the peak of the first major loop of the fault current (which may occur in any of the phases, as it has occurred in phase Y in the oscillogram shown in Figure 13.23). The subsequent loops will be smaller and less severe and thus the significance of the first loop. This is referred to as the momentary peak value of the short-circuit current for the most severe fault conditions, such as at extremely low p.f.s (R/X_L being very low) when the recovery voltage may be the maximum and the fault current the highest. These values are given in Table 13.11 in the form of likely multiplying factors for different symmetrical r.m.s. values of fault currents, I_{SC}, according to IEC 60439-1 for LT and IEC 60694 for HT systems and are drawn in Figure 13.22. These values are almost the same as provided by ANSI-C-37/20C as well as in Table 28.1. The exact values of this factor may be estimated by creating a short-circuit condition and obtaining an oscillogram. For details refer to Figure 13.23.

Notes

1 The rated momentary peak value of the fault current, I_M, will relate to the dynamic rating of an equipment. It is also known as the making current of a switching device and defines its capability to make on fault.

2 The peak value of the asymmetry is considered to determine the electrodynamic stresses to design the mechanical system and the supporting structure for the current-carrying components.

3 A breaker will not trip instantly when a fault occurs, but only after a few cycles, depending upon the actuating time of the protective relays and the breaker's own operating time. It will therefore generally trip only during the transient state of the fault. The breaking capacity of an interrupting device, unlike its making capacity, is therefore defined by the peak value of the transient state fault current, i.e. by I_{SC} (Table 13.9). Conventionally it is termed the r.m.s. value of the fault current.

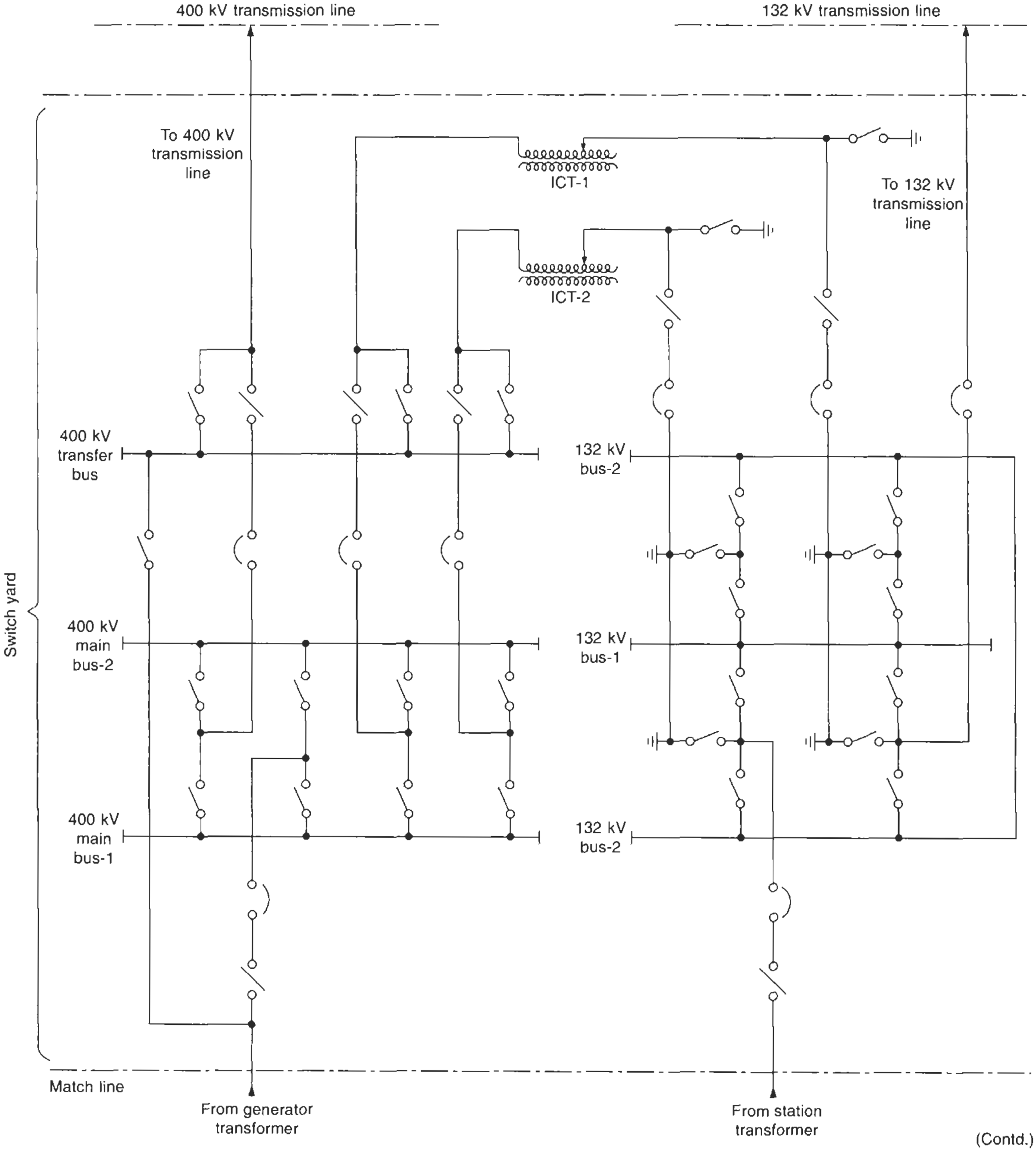

(Contd.)

Figure 13.21 A typical powerhouse generation and transmission system, also illustrating power distribution to unit and station auxiliary services

(Contd.)

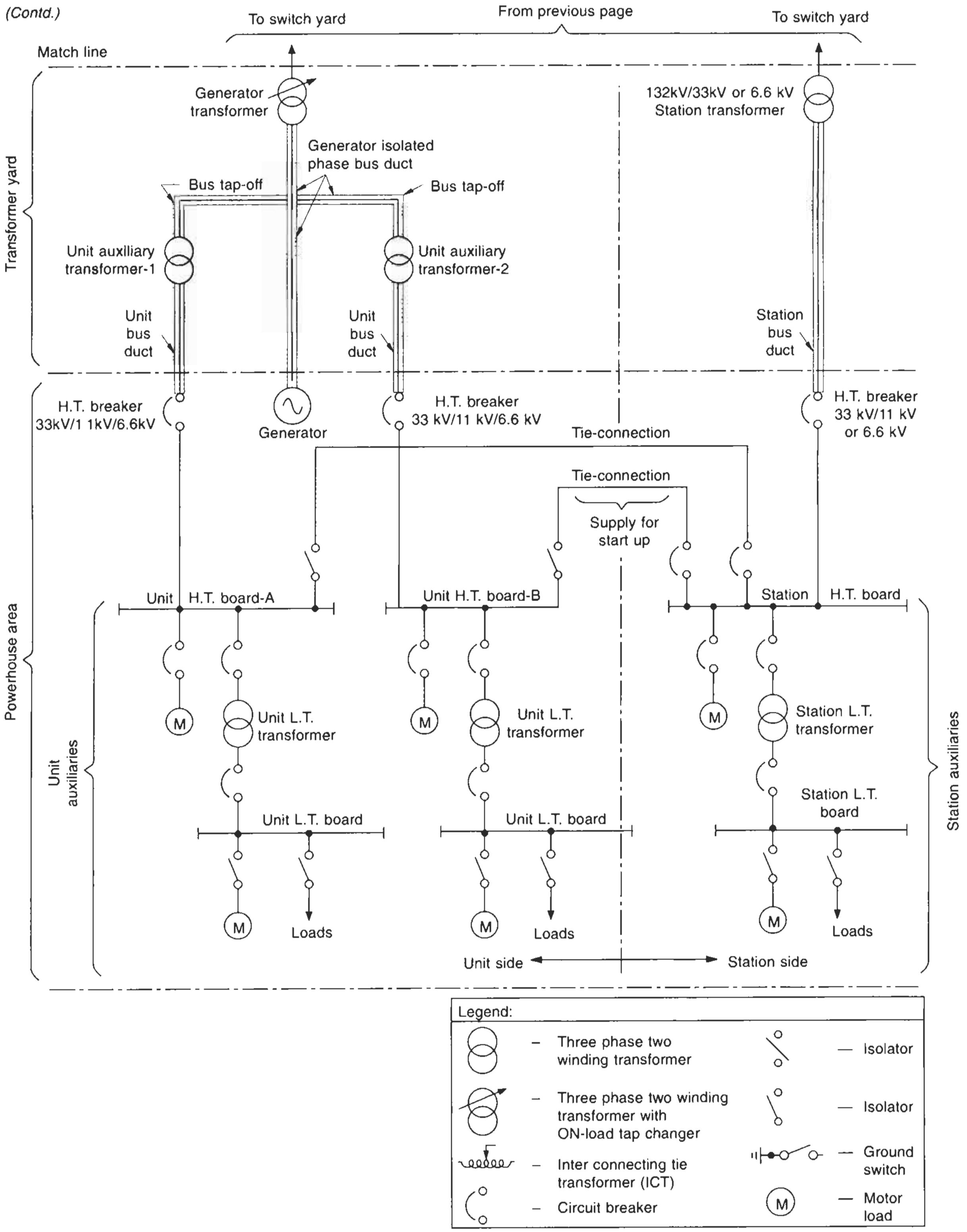

Figure 13.21 (Contd.)

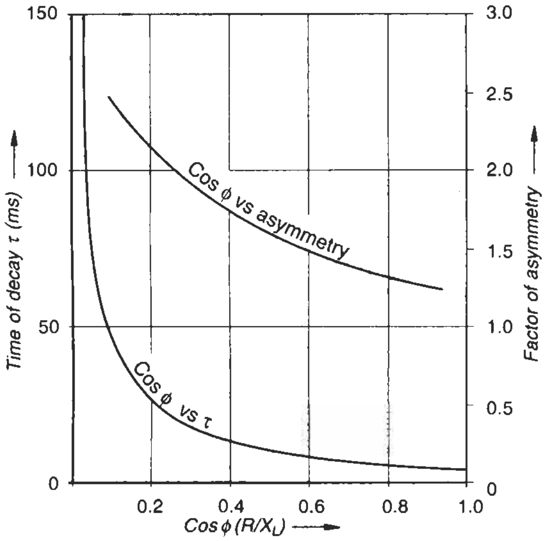

Figure 13.22 Approximate time of decay of the d.c. component and the factor of asymmetry as a function of system P.F. during a fault

4 When designing a current-carrying system it is the r.m.s. value of the fault current, I_{SC}, that is relevant to determine the thermal stresses ($\propto I_{SC}^2$) during a fault, to choose the correct material and size of the current-carrying components. (The duration of asymmetry is too short to cause any significant heating of the current-carrying components.)

Table 13.11 Multiplying factors to obtain the momentary peak (maximum r.m.s. or dynamic) values of the short-circuit currents including the sub-transient d.c. component at different power factors (R/X_L)

Prospective short-circuit or short-time current; I_{SC} kA(r.m.s.) (symmetrical breaking current)	*Factor of asymmetry to obtain the peak short circuit or making current I_M*	*Cos ϕ* *(R/X_L)*
(a) For LT systems		
Up to 5	1.5	0.7
Above 5 to 10	1.7	0.5
Above 10 to 20	2.0	0.3
Above 20 to 50	2.1	0.25
More than 50	2.2	0.2
(b) For HT systems	Min. 2.5	–

Note For CTs this multiplying factor has been specified as 2.5 for all voltage systems, as in IEC 60044-1. See also Section 15.7 for metering and protection current transformers.

Example 13.5

For a 50 kA (r.m.s.) fault level on an LT system, the momentary peak value of the fault current, I_M, will be = 50 × 2.1 = 105 kA.

8 Causes of asymmetry

A current wave propagating symmetrically about its zero axis, i.e. when the envelopes of the peaks of the current wave are symmetrical about its zero axis, is termed symmetrical (Figure 13.24) and a wave unable to maintain this symmetry is termed asymmetrical (Figure 13.25).

The p.f. during a short-circuit as noted in Section 13.4.1 is quite low, and is normally of the order of 0.1. The current will now lag the voltage by nearly 84° (Figure

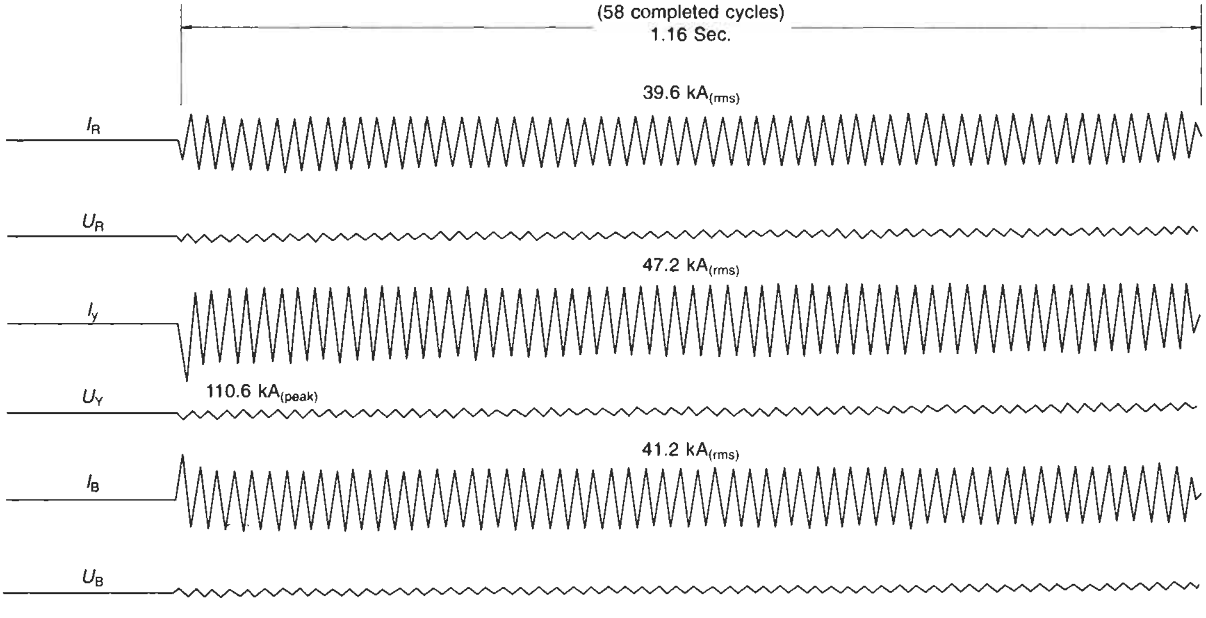

Figure 13.23 Oscillograms of an actual short-circuit test carried out on a power distribution panel (Courtesy: ECS)

17.11). To analyse the shape of a current wave on a short-circuit, consider the following conditions that may occur at the instant of the fault:

1 When the short-circuit occurs at a current zero, i.e., when the applied voltage is almost at its peak, the voltage and current waves will follow Figure 13.19, the current lagging the voltage by almost 84°. The current will now be almost symmetrical.
2 When the short-circuit occurs at a voltage zero the current will also commence at zero. This is an unusual situation when both the voltage and the current waves commence at zero and yet cannot propagate in phase with each other, in view of the current lagging the voltage by almost 84°. This situation is resolved by a shift in the zero axis of the current wave by almost 84°, as illustrated in Figure 13.26. Now it is able to fulfil its above condition again. The current will now be fully asymmetrical.
3 Let us consider a more realistic situation, when the short-circuit may occur somewhere between the above two conditions.

Supposing the current and the voltage waves both have some value on their respective wave forms at the instant of short-circuit. The current will again tend to become somewhat asymmetrical but not fully. The content of asymmetry will depend upon the instant at which the short-circuit condition occurs on the current wave and the p.f. of the faulty circuit (Figure 13.27). The higher the recovery voltage at the instant of fault, the lower will be the asymmetry (at V_m, the d.c. component will be zero) and vice versa (at V_0, the d.c. component will be the maximum).

It is observed that there may be asymmetry in the system as long as the short-circuit condition lasts, as illustrated in Figure 13.20, i.e. up to the opening of the interrupting device. (For opening times of interrupters, refer to Table 19.1.) But the content of the asymmetry may be quite feeble after three or four cycles. However, if the short-circuit condition still prevails, such as when

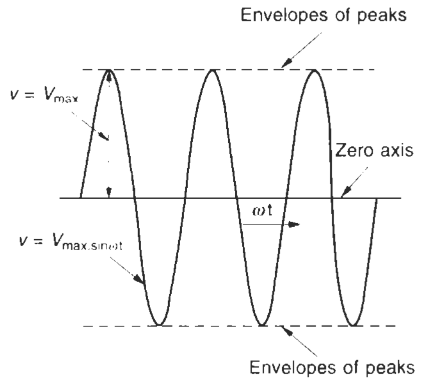

Figure 13.24 A symmetrical waveform

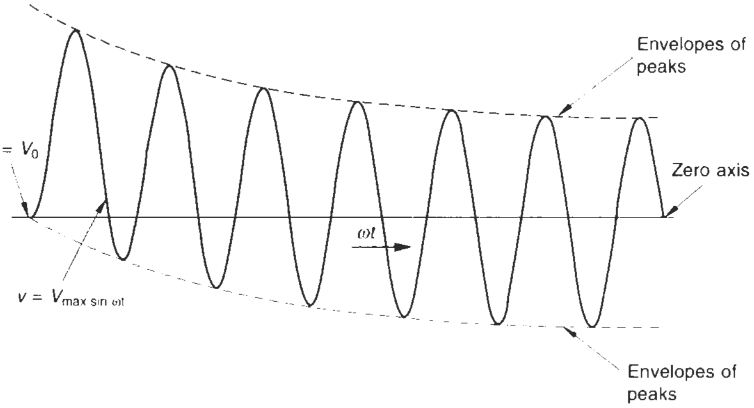

Figure 13.25 An asymmetrical waveform

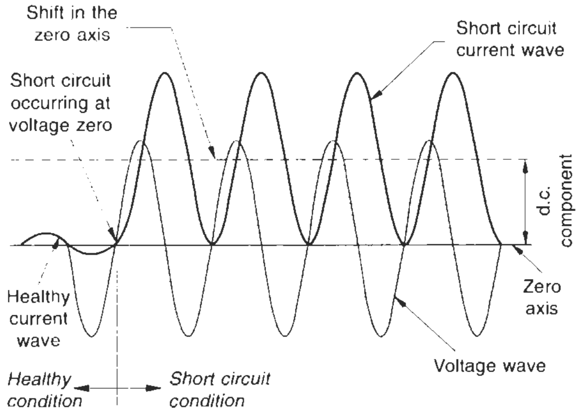

Figure 13.26 Illustrating a shift of nearly 90° (drawn at 90° for ease of illustration) in the current wave at nearly 0.1 PF, fulfilling the condition of current lagging the voltage by nearly 90° yet rising together at zero voltage (minimum applied voltage)

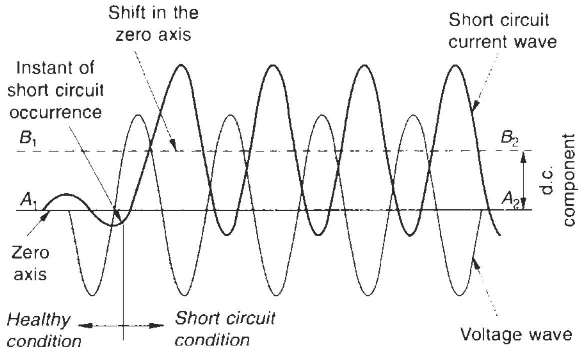

Figure 13.27 Approximate illustration of a short-circuit condition occurring when both voltage and current waves are not at their natural zeros. Current shifting its zero axis from A_1 A_2 to B_1 B_2 to rise from zero again at the instant of short-circuit

conducting a short-circuit test up to the desired duration of 1 or 3 seconds, the short-circuit current, although theoretically asymmetrical until the test period, may be regarded as symmetrical (having reached its steady state) after three or four cycles. The content of asymmetry is ignored after three or four cycles for all calculations and practical purposes. In fact, a d.c. component less than 50% that of the peak symmetrical component of the fault, current I_{SC}, at any instant during the course of short-circuit condition may be ignored. In other words, the relevance of the asymmetry may be considered only up to the first peak, as the immediate subsequent peaks may also be less than 50% of the peak value of I_{SC} ($I_{dc} < 0.5 I_M$) at that instant.

The generation of an asymmetrical current on an a.c. system, leads to the inference that a short-circuit condition will give rise to a d.c. component due to a shift in its zero axis. During the sub-transient state the value of the asymmetrical current will be the phasor sum of the symmetrical I_{SC} and the asymmetrical I_{dc}, current components. For details refer to Section 14.3.6.

13.4.2 Service conditions

Ambient temperature, altitude and atmospheric conditions at the place of installation of electrical equipment are considered to be the service conditions for the equipment to operate and perform its duties. All electrical equipment is designed for specific service conditions and variations may influence its performance. Below we analyse the influence of such non-standard service conditions on the performance of equipment and the required safeguards to achieve its required performance.

Ambient temperature

The rating of an indoor or outdoor switchgear assembly is referred to at an ambient temperature of 40°C. For a higher ambient temperature the rating of the assembly will be reduced in the same proportion as for the busbar systems and as shown in Table 28.3.

Altitude

For assemblies using the surrounding air as the insulation and cooling medium

The standard altitude for an LT switchgear assembly is 2000 m and for HT 1000 m, as in ANSI-C-37.20C and IEC 60439-1. At altitudes higher than this, the normal increase in temperature will become greater and the dielectric strength less for all assemblies using air as the insulating and cooling medium. For applications at higher altitudes, therefore, the derating factors as noted in Table 13.12 must be applied to obtain the reduced level of dielectric strength, i.e. one-minute power frequency voltage withstand, impulse voltage withstand and the continuous current rating etc. to which level the switchgear assembly will now be rendered to. To achieve the original level of dielectric strength, the insulation system of the switchgear assembly will have to be improved by the same degree as the derating. This can be achieved by increasing the clearances and the creepage distances to ground and between phases as discussed in Section 28.5.2 and Tables 28.4 and 28.5.

Table 13.12 Derating for higher altitudes for metal enclosed switchgear assemblies and bus systems

Altitude (m)		*Derating factors*	
LT systems	*HT systems*	*Dielectric strength*	*Continuous current rating*
2000	1000	1.0	1.00
2600	1500	0.95	0.99
3900	3000	0.80	0.96

Notes 1 Intermediate values may be obtained by interpolation.
2 No derating is applicable in case of insulated switchgear (GIS) assemblies.

Source ANSI C-37.20.2 and C-37.23

To achieve the original value of the continuous current, the size of the current-carrying components may also be increased to carry the higher amount of current in proportion to the derating.

Atmospheric conditions

A normal enclosure is meant for a reasonably clean atmosphere and a relative humidity not more than 50% for LT and 95% for HT indoor enclosures. Where the atmosphere is laden with fumes or steam, saline or oil vapours, heat and humidity, excessive dust and water or contaminated with explosive and fire hazardous gases, vapours or volatile liquids (Section 7.11) a special enclosure with a higher degree of protection is required as in IEC 60529 or IEC 60079-14. For non-hazardous areas, the enclosure can be generally one of those discussed in Tables 1.10 and 1.11, and when required can be provided with special treatment to the metallic surfaces. For hazardous areas, however, special enclosures will be essential as discussed in Section 7.11.

In outdoor type switchgear or controlgear assemblies the normal practice is to provide a double door in the front to house the front panel and protect the door knobs, meters, lights, pushbuttons, reset knobs or other accessories mounted on the door and thus prevent water or dust leaking through joints, knockouts and fitments etc. It is also recommended to have a canopy on the top of the enclosure to protect the panel from direct rain. Figures 13.6 and 13.28 illustrate this type of construction.

Flame- or explosion-proof assemblies (Type Ex. d)

For hazardous areas flameproof enclosures alone are recommended, except in areas with moderate intensity of contamination and where such assemblies are located away from the affected area and in a separate well-ventilated room, when pressurized enclosures may also be safe. The reason for this precaution is that frequent arcing takes place within the enclosure on each switching of a contactor, switch, breaker or an OCR etc. and also during operation of power and auxiliary contactors.

The classification of gases, vapour and volatile liquids according to their ignition temperatures has been given in Table 7.4. The basic requirements of these enclosures,

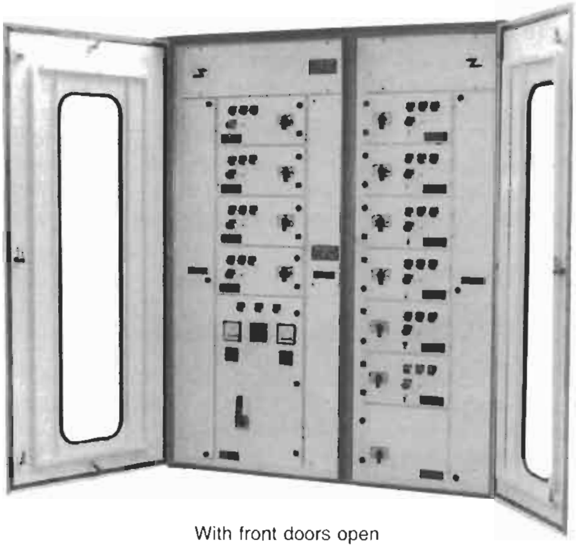

With front doors open

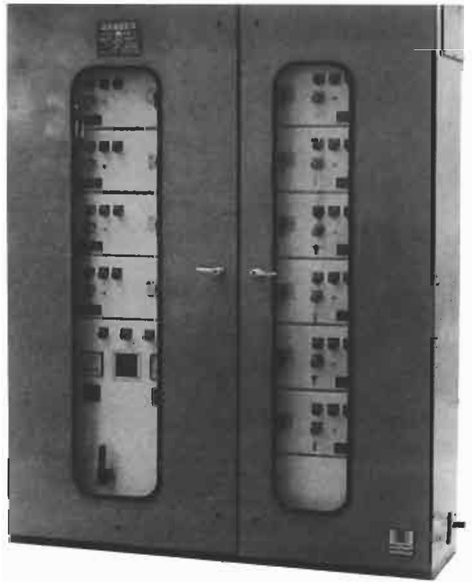

With front doors closed

Figure 13.28 A typical compartmentalized outdoor-type panel (Courtesy: ECS)

which remain the same as for motors conforming to IEC 60079-1, are also discussed in Chapter 7. Some of the vital requirements that a flameproof controlgear or switchgear assembly must fulfil are, however, as follows:

1 To prevent an electric arc or flame from the enclosure escaping to the atmosphere.
2 To withstand, without distortion, an explosion, within the enclosure.

An internal explosion is normally a consequence of absorption during a switch-on after a delayed shutdown. When an enclosure is switched OFF after normal running, the internal air cools and absorbs contaminants from the atmosphere. As a switch, a contactor or a breaker produces an arc during a switching operation, an explosion may occur within the enclosure on a re-switching. It is also possible that when the enclosure door is opened to check, test or replace a component, contaminants may have entered the enclosure. It is also likely that on a re-closing of the feeder door, the closure is not perfect due to human error and contaminants have leaked into the enclosure. All this may lead to an explosion on a re-switching.

Since it is not practical to manufacture a flameproof enclosure due to its size and bulk and the number of knockouts and openings on the doors for switches, metering, indicators, and pushbuttons (PBs) etc., it is common practice to locate these assemblies some distance from the affected area in a separate well-ventilated room. Depending upon the location and intensity of contamination, it may be permissible to meet the requirement by using a pressurized enclosure by maintaining a positive pressure inside the enclosure similar to that for motors (Section 7.13.3). When there are many switchgear assemblies, the room itself can be pressurized, which is safer and easier. Small enclosures, however, such as a PB station, switch or a switch fuse unit or an individual starter unit etc., which can be easily made of MS plates or cast iron, as discussed in Section 7.13, can be mounted in the hazardous area while the main MCC can be installed in the control room, away from the contaminated area and from where the process can be monitored.

Note
Avoid soldering of cable and wire terminal joints at such installations, which may loosen with temperature and time.

Excessive vibrations and seismic effects

Installations prone to heavy vibrations and shocks such as on the mounting platform near a large power-generating unit, on a ship, locomotive and similar installations may require provisions to absorb shocks and dampen vibrations to prevent loosening of components and wire connections in a switchgear or a controlgear assembly. Some economical methods to achieve this can be by providing:

- Anti-vibration pads at the foundation
- A rubber pad between the bottom of the assembly and its base or
- Mounting pads below the base frame.

But shocks of a seismic nature are different and may be more violent. They may require a special steel structure, forming the switchgear or the controlgear assemblies, to sustain the shocks without damaging or loosening components and wires mounted inside the assemblies. It may be possible to achieve this by using thicker sheets for the enclosures and providing additional reinforcement, wherever necessary, and exercising special care in selecting and fixing the hardware. The degree of reinforcement and other provisions to make the whole assembly and inside mounts suitable for a particular intensity of seismic effects will depend upon the probable seismic conditions in that area. This subject is dealt in with more detail in Section 14.6.

Note
One may observe that all the above special service conditions are generally the same as for the rotating machines discussed in Section 1.6.

13.5 Deciding the ratings of current-carrying equipment, devices and components

The rating of current-carrying equipment (switchgear assemblies, such as for the main bus system), devices (breakers, switches and contactors) and components (connecting links and wiring etc.) is defined by two parameters:

1 **Thermal rating or continuous current rating** This takes account of heat losses ($\propto I_r^2 \cdot t$, t being the time to reach thermal equilibrium), as generated during a long continuous operation under rated conditions. In breakers, switches and contactors, it will also define their duty cycle, i.e. the type of duty they may have to perform (Section 12.10 and Table 12.5).

To the basic current requirement is applied the derating factors for various service conditions, as noted in Section 13.4.2. The equipment, devices and components may then be chosen to be as close (nearest higher) to this rating as possible from the available standard ratings. Based on these ratings, the minimum cross-sectional areas of the other current-carrying parts used in the circuit, such as interconnecting links and the cables-are calculated.

2 **Short-time rating** This will define

- The electrical rating on a fault or short-term high current thermal effects, expressed by $\alpha\, I_{SC}^2 \cdot t_{SC}$, i.e., short-circuit current (I_{SC}) and its duration (t_{SC} – 1 or 3 seconds).
- The mechanical endurance of the current-carrying parts of all the equipment, bus system, devices and components, used in a particular circuit as well as the load-bearing members and supports on which they are mounted. The electrical parts of a device (breakers and switches, etc.) are the responsibility of the component manufacturers. The manufacturer of the switchgear assembly is responsible for the busbar systems, metallic links and wires.

The mechanical requirements of the load-bearing members, supports, busbars and metallic links in the incoming circuit will depend upon the electrodynamic forces arising out of the first major peak of the fault current, as discussed in Section 28.4.2. This is not, however, applicable to devices that are current limiting as well as the circuits and its components that are protected by it. These devices isolate the faulty circuit long before the fault current reaches its first highest peak. Yet the short-time rating for the incoming circuit (as the outgoing circuits may not experience these faults), should be selected from the standard short-time ratings only, as defined in Tables 13.7 and 13.10. For this short-time rating is then calculated the minimum cross-sectional area of the current-carrying components. To determine the cross-sectional area for this short-time rating and decide the mounting structure, supports and hardware etc. for the busbars, a brief procedure is described in Example 28.12.

Both ratings, thermal and short-time, will define the cross-sectional area of the current-carrying components. The more severe of the two will then prevail. In the following text we explain the procedure to assign the short-time current rating to equipment, a device or a component.

13.5.1 Assigning a short-time rating

The bus system of a switchgear assembly, its interconnecting links and wires are the protected type components, whereas an interrupter (breaker, switch or a fuse) may be a protecting or protected type, depending upon their application and location in the circuit. A contactor and an OCR are therefore protected devices in the same context, for they provide no short-time protection. A protecting device may become protected when it is also provided with a back-up protection.

A breaker, usually an MCCB or an MCB on an LT system, can be provided with backup HRC fuses to enhance their short-time rating. This may be done when the available MCCBs or MCBs possess a lower short-time rating than the fault level of the circuit they are required to protect, and make them suitable for the fault level of the circuit. But this is not a preferred practice and is seldom used. As a rule of thumb, the device that is protecting must be suitable to withstand electrically and endure mechanically the system fault current for a duration of one or three seconds, according to the system design.

The duration, however, is no criterion for a current limiting type protecting device, and a protected equipment, device or component can have a short-time rating commensurate with the tripping characteristics of the protecting interrupter. Accordingly these two types of tripping characteristics are explained below.

Delay tripping

The breakers (OCBs, MOCBs, ABCBs, SF_6 and VCBs) for HT and ACBs and MCCBs* for LT systems are devices that have a tripping time of more than a cycle on fault. The tripping time can vary from 1 cycle (20 ms) to 5–6 cycles (100–120 ms for 50 Hz systems), depending upon the type of interrupter as discussed in Chapter 19 and noted in Table 19.1.

This time allows the fault current to reach its peak and therefore all the equipment, devices and components protected by such a device must be suitable for the full fault level of the system. While the tripping time is usually in milliseconds the duration of fault, t_{SC}, is considered as one or three seconds. The longer duration than necessary is to account for the various time lapses that may occur

---

*MCCBs
(i) When they are normal duty as considered here.
(ii) They are also available in the current limiting type. When current limiting, they will not fall into this category.

before the actual tripping. When the tripping is electrical it may involve a trip coil and a motor mechanism adding to the mechanical tripping time, actuating time of relays, minimum time of tripping of interrupter itself (Table 19.1) and some safety margins. While the actual tripping time may still be quite low, it is customary to design a system for one or three seconds and for which is designed all the equipment, devices and components, protected by such a device.

The value of short-time rating ($I_{sc}^2 \cdot t_{sc}$) of the system may now exceed, the thermal rating of some of the equipment, devices and components, i.e. $I_{sc}^2 \cdot t_{sc} >$ thermal rating. This condition may be more likely in smaller ratings, particularly 600 A and less (such as for busbars), than larger ones. At higher currents, the natural thermal rating itself, due to the higher cross-sectional area, will become higher than the required short-time rating. The short-time rating will remain the same for a particular fault level of a system, irrespective of the current rating of the circuit. For more details refer to Section 28.4.1. Whenever the short-time rating exceeds the thermal rating, a larger area of cross-section of the main busbar system and the other current-carrying components will become necessary.

Figure 13.29 illustrates a simple distribution system and location of the main buses, devices and components to define the current ratings of all such devices and components under different operating conditions. The ideal current ratings of these components are given in Table 13.13 for an easy illustration.

The fault currents also develop electrodynamic forces, F_m, as in equation (28.4) due to the sub-transient d.c. component. These forces play an important role in the mechanical design of the interrupting device, the load-bearing and mounting structures for the interrupter and the bus system, and the hardware used in a switchgear assembly. All such mechanical parts, supports and hardware should be adequate to withstand such forces when they arise. A procedure to arrive at the ideal size of the current-carrying components, mounting structure, type of supports and hardware etc. is discussed in detail in Example 28.12.

If the short-time rating of the interrupting device is higher than the fault level of the system, which is the case with modern interrupting devices, the fault level of the system alone will prevail for the busbars, components and hardware. For example, for a system fault level of 50 kA, if the interrupter used is of 65 kA short-time rating, the bus system and all associated components will be designed for 50 kA only.

Current limiting type

Examples are HRC fuses (both LT and HT) and MCCBs and MCBs (LT only), which are available with current limiting features and are in extensive use. The tripping time of these devices is extremely low and much less than one half of a cycle of the current wave. They therefore do not allow the fault current to rise to its prospective peak. The protected devices and components can thus be selected based on the let-out energy of such devices on fault, which is extremely low, than the fault level of the system. If

I_{sc} = system fault level

t_{sc} = pre-arcing time of the HRC fuses or tripping time of MCCBs or MCBs, which would be much less than 5 ms (less than one quarter of a cycle for a 50 Hz system; see Figure 12.18 for more clarity)

then the let-out energy of the current limiter,

$$\propto I_{sc}^2 \cdot t_{sc}$$

If I_e is the equivalent 1-second fault current

then $I_e^2 \cdot 1 = I_{sc}^2 \cdot t_{sc}$

or $\qquad I_e = I_{sc} \sqrt{t_{sc}}$

Since t_{sc} will be too low (< 5 ms for a 50 Hz system) I_e will be much less than 7% of I_{sc} in all situations. To assign a short-time rating to the protected devices and components in such cases is therefore of little relevance. As noted above, current is the cause of heat, for which is assigned the thermal duty of a current-carrying device, component or part. Also note the following:

1 Current limiting devices need not be protected, since they are already very fast acting and, hence, self-protected.
2 But they are also rated for the same fault level for which the system is designed as they are connected directly to the system. This is a safety requirement.
3 Similarly, in a draw-out switchgear assembly, the I/C and O/G power contacts of a module and its mounts (insulators and supports) being already protected may be suitable only for the thermal rating of their feeders.
4 When such devices are used at more than one location in a circuit, their ratings must be meticulously coordinated to ensure isolation of the faulty circuit alone. Refer to Section 12.4.2 and Figure 12.21 for more clarity.
5 A current-carrying device or component in a distribution network may be subjected to varying degree of electrodynamic stresses, depending upon its location with reference to the network. Referring to Figure 13.29, the circuits away from the source of supply are subjected to lower stresses than the circuits nearer to it. Accordingly, the coordination is done between the protective devices, used in the upper and lower streams of circuits, to ensure that only the faulty circuit is isolated, rather than isolating other circuits in the upper stream (Section 12.4.1).

Notes on Table 13.13

1 An isolator, such as at locations C_1 and C_2 in Figure 13.29, may sometimes be used to isolate the circuits it is feeding, say, for maintenance or repairs. This isolator is simply a switch and provides no protection to the circuits. For a fault on the outgoing side, the individual outgoing feeders must have their own protection. For a severe fault elsewhere in the system, there must be a protective feeder closeby, in the upper stream.
2 **Role of an OCR:** this is only an overcurrent protection device and does not provide short-circuit protection.

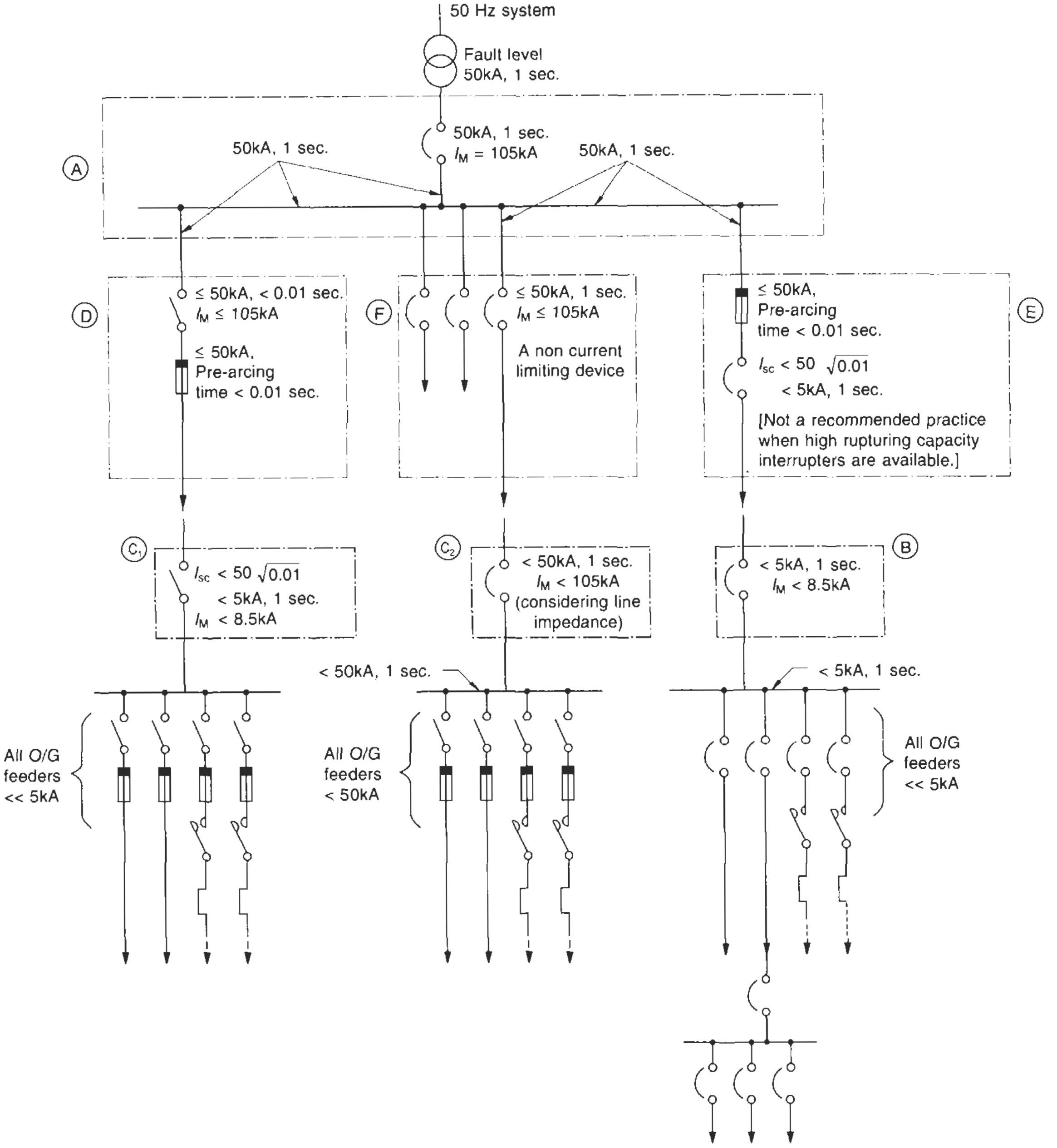

Figure 13.29 A power distribution scheme illustrating the procedure to assign fault level to a device, component or a bus system

The maximum it can operate is under a locked rotor condition of a motor, in which case the maximum current may not exceed six to seven times its rated current, which is moderate and far less than a short-circuit condition. Hence, it is not considered in Table 13.13.

3 Similarly, a contactor is a simple circuit making and breaking device, and is protected by other protective devices used in association with it. It has no role in the decision making for the current rating of other components or devices used in the circuit. Hence it is not considered in the table.
4 **Diversity factor:** this applies to column 7 of Table 13.13. Whenever a bus section has to feed a number of outlets, one can apply the diversity factor as discussed in Section 13.4.1(4) to optimize on the size of busbars and also the size of the main incoming feeder (Example 13.1).
5 **Service conditions:** on all the ratings so determined, one may apply the applicable service factors as noted

Table 13.13 Brief guidelines to assign the short-time rating to a component used in a switchgear assembly

	Components						
	← *Interrupting devices* →					← *Equipment and components* →	
	Application						
	When used as a protective device (as incomer)		*When used as a protected device (as outgoing)*[c]		*When used as an isolator (as incomer)*	*As protected parts*	
Parameters (1)	Tripping time > 1 cycle (2)	Tripping time < half cycle (3)	Tripping time > 1 cycle (4)	Tripping time < 1/2 cycle (5)	– (6)	Interrupter tripping time > 1 cycle (7)	Interrupter tripping time < half cycle (8)
Type of devices	OCBs[a], ACBs, MCCBs in LT and MOCBs[b] ABCBs[b], SF_6 and VCBs in HT	MCCBs, MCBs in LT and HRC fuses in both LT and HT	As in column 2	As in column 3	Switching device locations C_1 and C_2, as shown in Figure 13.29	Main bus, its feeding tap-offs and interconnecting links or cables etc. and all outgoing links, interconnecting devices that are also connected on the main bus such as shown at section F, Figure 13.29.	All outgoing connections by solid links or cables
1. Short-time rating or symmetrical fault level I_{sc}	I_{sc}	I_{sc}	I_{SC}, if connected on the main bus, otherwise < I_{SC} depending upon the circuit impedance		Depending upon the protective feeder on the upstream. Refer to Figure 13.29	I_{sc}	No relevance
2 Duration of fault t_{sc}	1 or 3 seconds[d]	< half cycle or < 5 ms for a 50 Hz system	1 or 3 seconds[d]	< 1/2 cycle or < 5 ms for a 50 Hz system	1 or 3 seconds[d]	1 or 3 seconds[d]	–
3 Making capacity I_M	As in Table 13.11	–	As in Table 13.11	–	**As in Table 13.11**	–	–
4 Endurance of supporting and mounting structure, load-bearing members and hardware	According to electrodynamic forces, $F_m \propto I_M^2$ equation (28.4)	–	As in column (2)	–	**As in column (2)**	As in column (2)	No additional reinforcement of members or supports necessary
5 Cross-sectional area of current-carrying metallic links or cables	Taken care of by the manufacturer of the devices					(a) For mechanical endurance according to F_m (Section 28.4.2) (b) For electrical endurance $\alpha I_{sc}^2 \cdot t_{sc}$ (Section 28.4.1) and (c) For maximum thermal rating $\propto I_r^2 t$ of the feeder, whichever is higher of b and c. (t = time required to reach the thermal equilibrium)	As per maximum thermal rating of the feeder.

Figure 13.29 illustrates a typical power distribution scheme to assign ratings to the various devices, components and busbar systems.

[a] Use of these breakers is gradually waning in the light of more advanced technologies available in an ACB and MCCB.

[b] Use of these breakers is also waning in the light of more advanced technologies available in SF_6 and VCBs (Section 19.5).

[c] These protect the circuits in the lower stream and are protected by a device in the upper stream such as feeders D and E in Figure 13.29.

[d] Normally only a 1-second system is in use. The 3-second system is severe, for which protective devices in certain ratings may not be possible or may become prohibitively costlier to produce. The 3-second system may, however, be used for a generator circuit to protect the generating source from a fallout on a fault elsewhere in the system.

in Section 13.4.2 to arrive at the most appropriate sizes of components, bus sections, etc.

13.6 Designing a bus system

We discuss in detail in Chapter 28, the procedure to design a bus system, including its mounting and supporting structure and hardware for a required fault level.

13.6.1 Constructional features of a bus system

(i) Busbars and wireways

In the cubicle construction of a switchgear assembly the busbar chamber is normally located at the top of the assembly and runs through the length of it. It is usually suitable for extension, through fish joints at either end, if required at a later date. For installations having top cable entry, the busbar chamber may also be located at the bottom of the assembly or the depth of the panel increased, with an additional shroud between the top busbar chamber and cable chamber. From these main busbars are tapped the vertical buses for each vertical panel. Manufacturers may adopt different practices for horizontal and vertical busbar arrangements to economize on their cost of production. We illustrate the most common types of busbar arrangements.

A separate control wireway may also run through the same busbar chamber, with suitable segregation or shrouding between the main bus and the control bus. This arrangement can be seen in Figures 13.2 and 13.7. The control bus system may be required for one or more auxiliary supplies for the following auxiliary services.

1 Motor winding heating up to 30 kW: control bus voltage 24 V a.c.
2 Motor space heaters above 30 kW: control bus voltage generally

$$\frac{V_r}{\sqrt{3}}$$

3 A.C. control supply: control bus voltage generally 110 V or

$$\frac{V_r}{\sqrt{3}}$$

Note
The interpanel control wiring for interlocking between feeders, space heaters and panel illumination will also run through this wireway or control bus chamber.

(ii) Busbar mounting configurations

Manufacturers may adopt different practices to mount the main and auxiliary busbars, depending upon the size, rating and fault level of the system. Some of the recommended and more common of these are illustrated in Figure 13.30(a)–(d) and discussed briefly below,

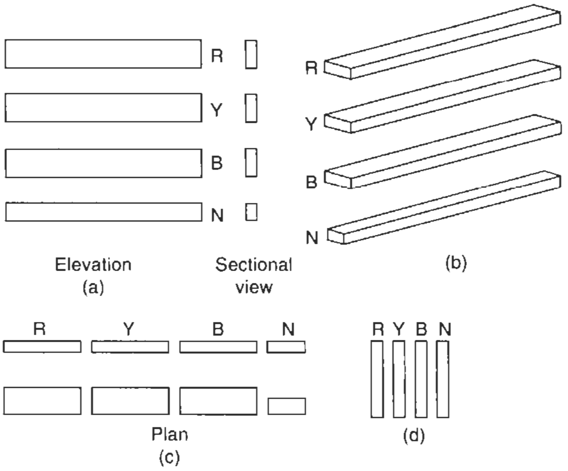

Figure 13.30 Possible arrangements for busbar mounting systems

Arrangement (a)
Busbars are mounted one below the other, horizontally but in a vertical disposition. The cooling is better and requires less derating. The short-circuit withstand capacity is high due to high sectional modulus but occupies more vertical space. This configuration is also adopted by some manufacturers.

Arrangement (b)
This is similar to (a) above but each busbar now is mounted horizontally. Due to obstruction in heat dissipation, this arrangement requires a higher derating. It is also prone to collecting dust and provides a habitable surface for lizards and rodents etc. Therefore this is not a recommended configuration.

Arrangement (c)
This is similar to (a) except that now they are in the same plane and are not one below the other. Although heat dissipation would be slightly better than (b), this too is not a recommended configuration.

Arrangement (d)
All busbars are now in one plane and in a vertical disposition. This is the most appropriate and most commonly adopted configuration. With such an arrangement any rating is possible. For higher ratings, the Copper Development Association (UK) have recommended many more configurations of busbar arrangements with a view to have a better utilization of the metal up to its optimum capacity. For more details refer to Section 28.7.2(iii) and Figure 28.14.

(iii) Busbar mounting systems

To obtain a strong busbar mounting system, suitable to withstand the electrodynamic forces arising out of a system fault, modern practice is to make use of thermosetting plastics, such as DMC (Dough Moulding Compounds) and SMC (Sheet Moulding Compounds) for the busbar mounting supports. These compounds are suitable for compression, transfer mouldings and injection mouldings. They are basically fibre- or glass-reinforced thermosetting plastics (FRP or GRP) and possess good physical and thermal stability, high mechanical strength and excellent electrical properties as shown in Table 13.14.

Moulding compounds

With the advent of these compounds in the 1960s, the hitherto more conventional insulating materials, such as phenol formaldehyde (popularly known as Bakelite) and wood (veneered impregnated) have been almost replaced by them. These compounds offer better electromechanical properties than conventional materials. Below we describe the basic mix and properties of these two basic compounds, for a brief reference.

DMC (Dough Moulding Compound)

This is also known as Bulk Moulding Compound (BMC). It is blended through a mix of unsaturated polyester resin, crosslinking monomer, catalyst, mineral fillers and short-length fibrous reinforcement materials such as chopped glass fibre, usually in lengths of 6–25 mm. They are all mixed in different proportions to obtain the required electromechanical properties. The mix is processed and cured for a specific time, under a prescribed pressure and temperature, to obtain the DMC.

SMC (Sheet Moulding Compound)

This is a material produced from the impregnation of glass fibre-mat (fibreglass, which is in the form of dry sheet, is commonly known as chopped stranded mat (CSM)) or rovings, with a liquid and unsaturated polyester resin, which thickens chemically to a dry sheet form. The total mix is sandwiched between polyethylene films and then roller-pressed to impregnate and consolidate it. The chemical thickening enables the material to be handled after the polyethylene film has been removed before moulding.

SMC is used where its superior strength and impact resistance over DMC are more important. The improved properties, particularly its strength, over DMC is a result of reduced degradation of the glass and the ability to use longer fibre. In DMC, this is usually 6–25 mm, while in SMC it is about 25–50 mm.

The compounds so formed have excellent thermal stability and are self-extinguishing and even completely fire-retardant. Their properties are given in Table 13.14. A few common types of insulators and supports are shown in Figure 13.31.

(iv) Making busbar connections

Aluminum, being a highly oxidizing and malleable metal, requires utmost precautions when making a connection or a joint. The joint may be a fish joint for connecting two straight sections of a bus, tap-offs or even the thimbling of cables on the aluminium extended links. To avoid a rapid formation of non-conducting oxide film on the surface of the metal, the surface must be treated properly before making the joint. To avoid this one may take the following precautions:

1 Clean the surface with a wire brush to loosen the oxide film and then wipe it off with a soft cloth. The use of a wire brush serves a dual purpose; first, scraping and removing the oxide film, and secondly, providing the surface with a moderate knurling (roughness), which helps to make a better surface-to-surface contact and, in turn, a better joint.

2 Apply a contact grease with the following properties:
   - To be chemically neutral
   - To have a nil or negligible electrical resistance and

Table 13.14 Properties of thermosetting plastics

	Properties	*Unit*	*DMC*	*SMC*	*Relevant standards for test methods*
(I)	**Physical properties**				
	1 Specific gravity	gm/cc	1.85–1.95	1.8	
	2 Shrinkage	mm/mm	002–.003	.0015	
		%	0.2–0.3	0.15	
	3 Water absorption	%	0.2 (m.)	0.15 (m)	BS:2782
	4 Operating temperature	°C	140–150	140–150	
(II)	**Mechanical properties**				
	1 Minimum tensile strength	kgf/cm^2	250–500	500–900	BS:2782
	2 Minimum compressive strength	kgf/cm^2	1200–1800	1600–2000	BS:2782
	3 Minimum cross-breaking strength or flexural strength (bending strength)	kgf/cm^2	700–1200	1400–1800	BS:2782
	4 Impact strength	kgf cm/cm^2	30–40	60	BS:2782
(III)	**Electrical properties**				
	1 Dielectric strength (min.)	kV/mm	10–14	10–14	BS:2782
	2 Tracking index	V	1000	1000	BS:5901

Note These values are only indicative and may vary with the quality of mix and process of curing etc., and differ from one manufacturer to another. For exact values, contact the manufacturer.

Figure 13.31(a) Insulators to hold busbars in flat configuration (Courtesy: J.K. Plastics)

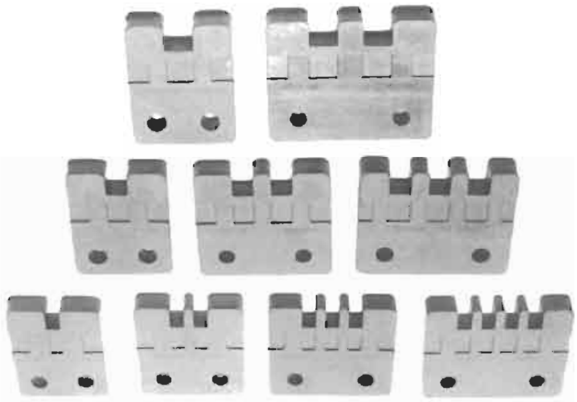

Figure 13.31(b) Insulators to hold busbars in vertical configuration (Courtesy: Vinayak Corp.)

Figure 13.31(c) Conical insulators (Courtesy: J.K. Plastics)

- To have a minimum tracking temperature (at which the grease may start conducting) of 200°C. Apply this grease swiftly after the surface cleaning to avoid a fresh oxidation. The following are a few types of greases:
  - (a) Servogem 2 (multipurpose) from the Indian Oil Corporation
  - (b) Multipurpose grease *H* from Hindustan Petroleum Ltd or
  - (c) Any other chemically neutral grease, which will have no electrical resistance and which can withstand a minimum tracking temperature of 200°C.

3 The joints must be tightened with a torque wrench. For the recommended torque values refer to Table 29.1.

Note

Petroleum jelly is not recommended due to its low tracking temperature. The minimum tracking temperature is recommended to be 200°C, the same as for the busbars during a fault. Also refer to Section 28.4.1.

Fasteners

Only high tensile (HT) fasteners must be used for busbar jointing and their interconnections or links not only to take care of the fault level but to also maintain the recommended contact pressure over a long period of operation as noted in Table 29.1. An ordinary fastener may not be able to withstand or sustain this torque for long. Similarly, the busbar supports, which are mounted on only two or three fasteners, should also be fitted with these fasteners.

Electroplating of HT fasteners

HT fasteners in normal manufacturing are black phosphated and then lubricated. They are not required to be electroplated, as they do not rust unless the phosphate coat itself is damaged. Such fasteners when used for electrical purposes, such as for mounting and jointing of busbars and their supports, are not generally exposed to outdoor conditions. The phosphate coating thus remains intact and an electroplating (zinc or tin passivation) is not required.

Moreover, electroplating of HT fasteners may pose the problem of hydrogen embrittlement, which can cause cracks on their surfaces. The HT fasteners are already heat-treated and have a high content of carbon. When they are electroplated, whatever hydrogen they may emit during acid pickling is trapped on the surface, as it forms a strong bonding with the carbon. The C–H bonding renders the surface brittle. Rapid removal of hydrogen therefore becomes essential to save the hardware from surface cracks. It is possible to do this by tempering the hardware at a low temperature, say, 100–120°C for about 30 minutes, before transferring them to the electroplating bath.

If such fasteners are stove-enamelled (which is normally not done), the trapped hydrogen is removed automatically while being stoved. Since the fasteners are used only for the assembly of switchgear or busbar systems, they are used at room temperature only. Therefore, if they are electroplated, they must be tampered, which is time consuming and adds to the cost of production. Moreover this has no technical advantage. The HT hardware must therefore be used as they are. When it is absolutely necessary to electroplate them, tampering will be essential.

13.6.2 Service conditions

These are the same as discussed in Section 13.4.2. For busbar systems, however, a more elaborate exercise would be necessary in high rating systems, 1600 A and above, due to skin and proximity effects as discussed in Section 28.6.3.

13.6.3 Complying with design parameters

Rated voltage and frequency

The switchgear assembly, its components and the bus system must be designed for the rated voltage and frequency.

Rated insulation level

To comply with the rated insulation level, all the current-carrying components forming part of the assembly should have clearances and creepage distances according to their relevant standards whereas busbars and busbar connections must have the distances noted below.

Clearance and creepage distances for air-insulated busbars

The clearances and creepage distances should be maintained as shown in Tables 28.4 and 28.5. These values can be reduced when:

(a) A barrier of insulation is provided between the conducting parts, such that the clearances and creepages now achieved are no less than as specified in Tables 28.4 and 28.5.

(b) The current-carrying conductors are covered with an insulation suitable for withstanding a one-minute power frequency voltage as in Tables 13.2 and 14.3 for series I and 14.1 and 14.2 for series II voltage systems.

(c) Any provision or arrangement that can withstand the one-minute power frequency voltage as in these tables at a lesser clearance or creepage distances than specified in Tables 28.4 and 28.5, such as by providing extra insulation wherever necessary. To obtain clearances for open-type outdoor and neutral grounding switchgears, refer to BS 7354.

13.7 Designing a switchgear assembly

13.7.1 Rated continuous current rating and permissible temperature rise

The rating of current-carrying devices and components should be selected according to the continuous current they have to carry and the duty they have to perform. Deratings, depending upon the service conditions, should also be applied when deciding their continuous current

Table 13.15 Current rating and technical data for 1100 V, single-core flexible, PVC insulated copper conductor cables for control and power wiring

Cross-sectional area *mm²*	*Equivalent diameter of copper conductors* *mm*	*Nominal thickness of insulation* *mm*	*Nominal overall diameter* *mm*	*Maximum resistance at 20°C* *Ω/km*	*Current rating d.c. or single phase a.c. at 30°C ambient* *A*
0.5	0.94	0.6	2.3	37.10	4
0.75	1.20	0.6	2.55	24.70	7
1.0	1.34	0.6	2.70	18.50	11
1.5	1.605	0.6	2.95	12.70	14
2.5	2.1	0.7	3.65	7.60	19
4.0	2.61	0.8	4.35	4.71	26
6.0	3.2	0.8	5.65	3.10	46
10.0	4.6	1.0	7.15	1.884	64
16.0	5.9	1.4	8.95	1.138	85
25.0	7.6	1.4	10.65	0.6845	112
35.0	8.7	1.4	11.75	0.5227	138
50.0	10.6	1.6	14.05	0.3538	172

As in IEC 60540

Courtesy Finolex Cables Ltd.

Notes

1 Consider an average derating of 67% for power cables when operating at an ambient temperature of 50°C.

2 Consider an average derating of 0.8 for a number of power cables bunched together, generally not more than six at a time.

3 For control cables, derating may not be material in view of very low control currents. Whenever required, the following average deratings may be considered

up to	10 cables	0.70
	20 cables	0.60
	30 cables	0.50
	40 cables	0.40

rating. The sizes selected must then be counter checked for their mechanical endurance to sustain the fault conditions of the system or the circuits on which they are connected, depending upon the protective scheme adopted and its time of isolation on fault (i.e. 1 s, 3 s or current limiting) as discussed above.

The ratings and sizes of main components and cables can be selected from manufacturers' catalogues. But cables required for the switchgear internal control and power wirings, being typical of all, are normally identified by their cross-sectional area rather than the current ratings. We have therefore provided the technical data and current ratings for the most common sizes of such cables for a ready reference in Table 13.15.

13.7.2 Design considerations for switchgear assemblies

Below we discuss briefly the constructional requirements and general manufacturing practices for cubicle-type switchgear and controlgear assemblies, and the electrical and the mechanical design considerations to comply with the above design parameters and service conditions.

Constructional requirements and general manufacturing practices

Thickness of sheet steel

- **Load-bearing members and frame** Two to three mm (14, 12 or 10 SWG) depending upon the size of structure and weight of the components to be mounted.
- **Covers and partitions** From 1.6 to 2 mm (16 or 14 SWG). Larger size of doors, doors having a number of relays, instruments and other devices. Also doors for mimic control panels etc., required to be mounted with a number of instruments, relays or indicating devices and carrying their load and wiring weight, should be made of thicker gauges and/or stiffeners must be provided at the back of the door for strength and to avoid shaking and buckling of doors.
- **Base frame** Three to four mm (10 to 8 SWG) MS Sheet or MS channel of section ISMC-75 (75 mm wide) or ISMC-100 (100 mm wide) depending upon the size and weight of the assembly as shown in Figure 13.32 and 13.48.
- **Gland plate** Three to four mm of MS or non-magnetic material, depending upon the number, sizes and type of cables (single core or multicore) it has to carry (Figure 13.33).

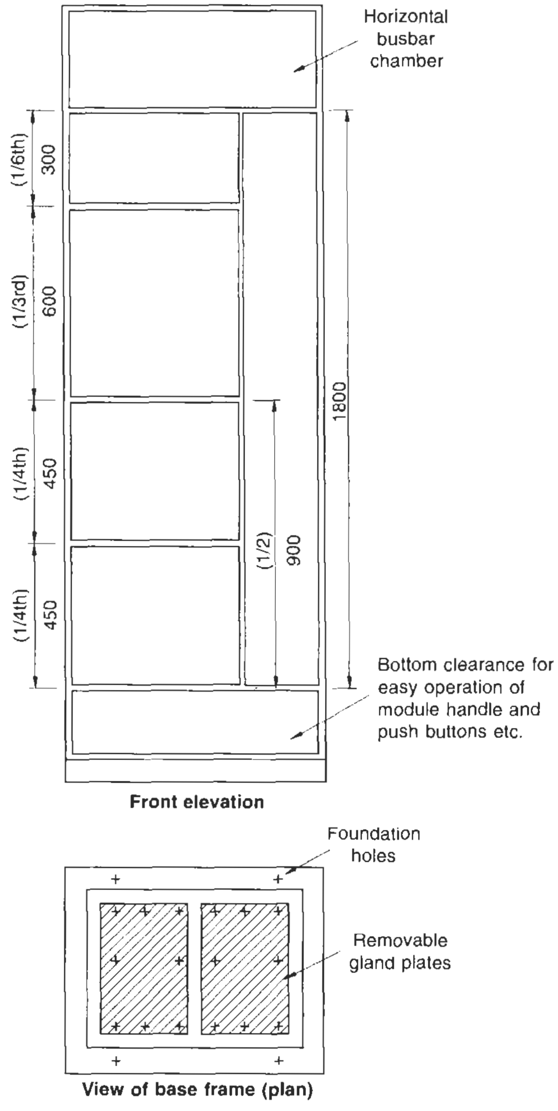

Figure 13.32 Typical module sizes

Note

All the three phases (R, Y and B) of a single-core or a multicore cable must pass through a common opening in the gland plate. When this is not possible, such as when using single-core power cables, and each core is required to pass through a separate gland to hold it securely in place, the gland plates, through which these cables will pass, must be made of a non-magnetic material (aluminium, SMC/DMC or Bakelite etc). This is an important requirement to eliminate electromagnetic induction in all surfaces that have magnetic properties due to the proximity effect (Section 28.8) caused by each phase. In a three-core cable, the field induced by each phase, being in a circular form, is neutralized, due to phase transposition, (Section 28.8.4). In individual single core cables each core produces its own field, which is not neutralized and creates magnetic currents, causing eddy current and hysteresis losses in the gland plate if it is made of MS. This may cause excessive heat in the gland plate and result in insulation failure of the cables. It may also lead to a short-circuit condition.

Corollary

It would be interesting to note that to eliminate such a phenomenon in large metal-enclosed current-carrying systems a segregated phase bus system is in fact preferred, to shield the magnetic influence of one phase on the other (Section 28.2.2). In a segregated system the conductor on each phase is enclosed by metallic barriers, similar to the cable by the gland plate. But a gland plate is totally different from a segregated system. The thickness of gland plate of only 3–4 mm, provides no shielding for the field produced by each core

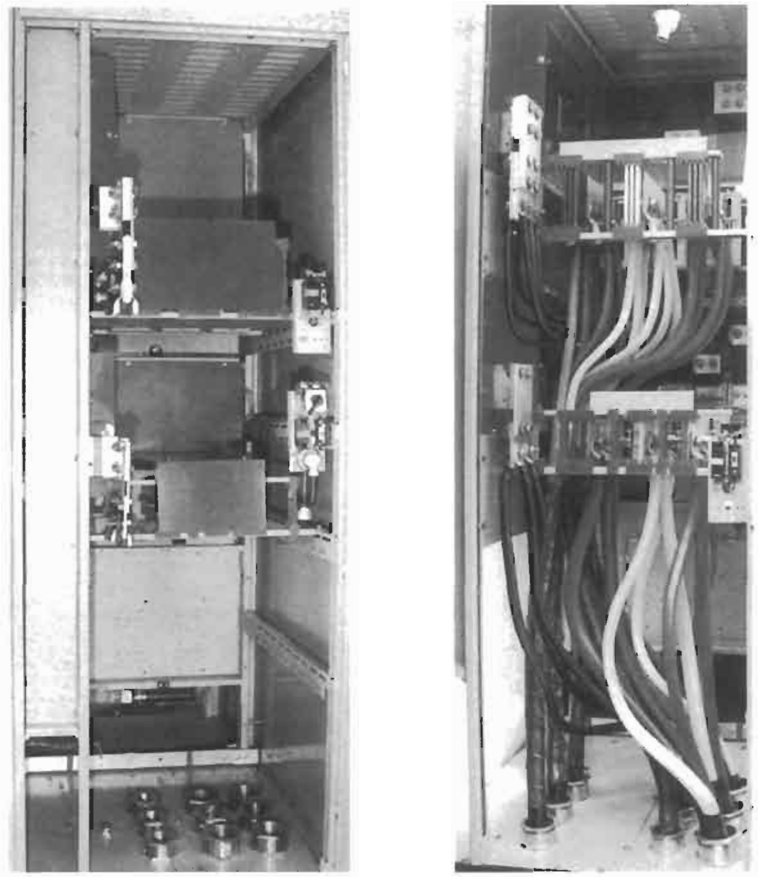

Before the cabling After the cabling

Figure 13.33 Arrangement of gland plates

of cable running through the gland plate. In a segregated system, the enclosure runs the full length of the conductors and provides total shielding for the induced fields. Although the rating of cables may not be high for the purpose of the proximity effect, the close vicinity of its phases, when not in a circular form, may cause enough mutual induction between them, which can heat the gland plate beyond safe limits. MS plates have been seen to melt as a result of this effect leading to a severe fault. Hence the necessity for providing the gland plate of a non-magnetic material to eliminate the main heating constituents, hysteresis and eddy current losses. For details on the proximity effect and magnetic shielding, refer to (Sections 28.8 and 27.3.2).

Other requirements

1 Provision of a segregation between the adjacent feeders in a modular design.
2 Wherever a circuit breaker is to be housed, this should be in a separate compartment.
3 Shrouds and shutters are essential to cover all live parts in a feeder module that may be exposed to the operator when the feeder door is opened (see Figure 13.3). This is a safety requirement for the operator attending the feeder. There may be two types of doors for the accessibility to the live parts:
   (a) Doors which may not be opened for carrying out day-to-day operation or maintenance. Such doors may be almost the fixed type, as for a busbar chamber or the rear panels of a front-operated assembly. They may be bolted to the frame so that, when required, they can be opened only with the use of prescribed tools. This is a safety requirement for access to the live parts only by authorized persons. To provide an extra shroud between the door and the live buses/parts in such cases is not mandatory.
   (b) Doors which may be opened often to carry out day-to-day operation and maintenance. They should be the removable type and opened manually. In these cases, all parts that may still be live, even after the switching device has been turned OFF, before opening the door must be provided with a shroud or a shutter (this is a mandatory requirement as discussed later under interlocking schemes). Refer to Figure 13.3 showing such an arrangement.

Note

For instrument modules, relay and control modules or control panels or all power modules, where an interlock with the door is not possible or is not provided, a proper shroud or shutter must be provided on all exposed live parts rated above 240 V.

4 To provide a folded and extensible construction to allow for ease of alteration and extension of assemblies at site in future, if required.

5 To have a modular construction with a wide choice of module sizes for optimum utilization of the usable area in each vertical panel, which is normally 1800 mm as illustrated in Figure 13.32. The general practice is to have the module sizes in the ratio of 1/6 (300 mm), 1/4 (450 mm), 1/3 (600 mm) and 1/2 (900 mm), etc. Some manufacturers, however, supply 1/8 (225 mm) and 1/9 (200 mm) size of modules when the sizes and number of components for a module are less and can be accommodated in such a small module size. For critical installations, however, such as for a refinery or a petrochemical plant or for the essential services of a power-generating station or installations that are in humid conditions or are contaminated, it is advisable to have a module size no smaller than 1/6 (300 mm) with a view to providing more space within the feeder to achieve larger clearances between the live parts and to lessen the chances of a fault during normal operation, besides providing extra working space.

6 The operating height of each operable mount, i.e. the centreline of the breaker or the switch handle and pushbuttons or reset buttons, including the reset probe of a protective relay on the feeder doors, is recommended to be no higher than 1900 mm from ground level. This is an operational requirement for ease of operation.

7 The height (we may consider it from the bottom line) of the indicating instruments such as a voltmeter and an ammeter, which the operator may have to read often, is also recommended to be no higher than 2000 mm or less than 300 mm from ground level.

8 The terminals provided to receive cables to make external connections, may preferably be located no less than 200 mm (at the terminal centreline) from the gland plate.

9 For ease of maintenance, all the busbars, horizontal or vertical, control or auxiliary, should be easily approachable. Figure 13.34 shows a typical rear view of an assembly with the main horizontal and vertical

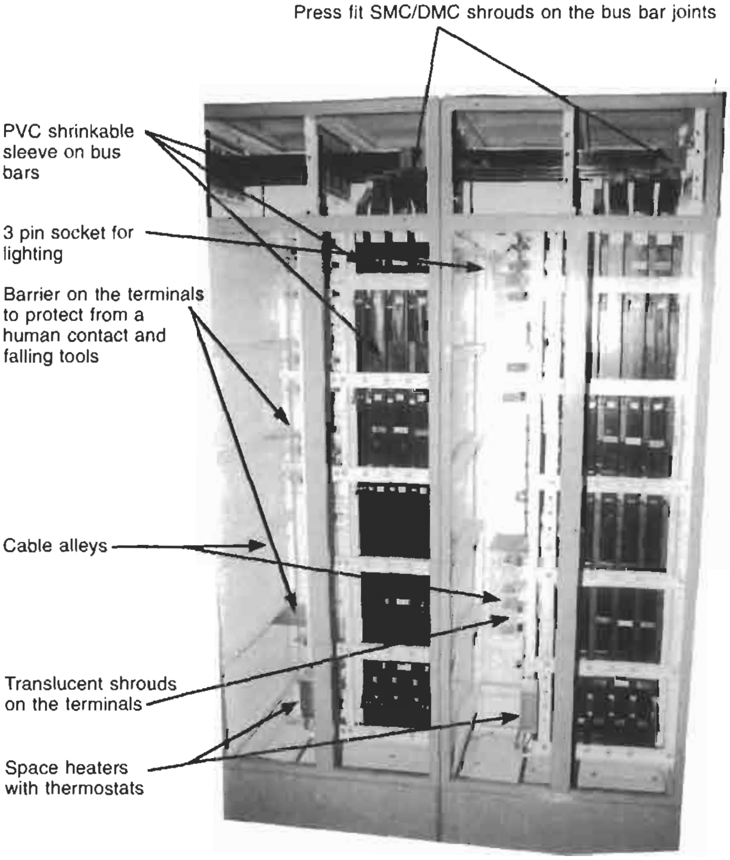

Figure 13.34 Rear view of a typical MCC showing space heaters at the bottom of each cable alley and shrouding of the live parts

buses and Figure 13.2, illustrates the front of the same assembly with two sets of single-phase control buses.

10 Also the cable alley should be easily accessible to make cable connections, and facilitate easy maintenance and regular checks, as illustrated in Figures 13.2 and 13.34.

11 Shrouds are recommended in the front and on the top of the terminals of each feeder to provide protection to the operator from live parts. They will also prevent the tools falling inadvertently from an upper module onto the live terminals of the lower module. Look closely at Figure 13.34 for these features, where in the front is provided a typical translucent shroud to enable a check of the terminals, without opening the shroud. On top is provided another shroud to prevent the terminals from falling tools. If the shroud is of polycarbonate (acrylic has a low temperature index), it should be suitable to withstand a temperature of up to 200°C without deformation. This temperature may be reached during a fault at the terminals.

12 For safety reasons, the busbar chamber and the cable alley should be separate and shrouded from each other.

13 Where wires or conductors may pass through a metal sheet, a rubber grommet, bushing or other mechanical protection should be provided to prevent the wires from insulation damage.

Mechanical interlocks

- Provisions must be made for safety features such as padlocking and door interlocking arrangements. Door interlocking is required to ensure that the feeder door does not open when the feeder is live.
- Similarly, it must not be possible to switch the feeder ON when feeder door is open.
- A defeat mechanism to bypass the door interlock may also be necessary for the purpose of testing.
- Padlocking arrangements may be required to lock the feeder in the OFF position when the machine is undergoing a shutdown or repairs.

Refer to Figure 13.12 showing these features.

Protection from electric shocks (grounding system)

1 **Main grounding** The provision of a grounding arrangement is mandatory through the length of the panel. It may be of aluminium, galvanized iron (GI) or copper. (See also Section 22.4.)

2 **Grounding of each feeder** The most effective system is to ground each feeder with the main ground bus at one point at least. It is important to note that each feeder is grounded automatically through the metallic supports of the assembly, on which are bolted all the switchgear components (the whole assembly is already grounded). For an ideal condition, an additional grounding of the components should normally not be required but this grounding may not be foolproof due to the painted frame on which the switchgear components are mounted. It is possible that the components may not make a perfect ground contact through the body of the switchgear frame and it is therefore recommended that each component is separately grounded. For a cubicle design, a separate ground bus of a smaller section than the main ground bus may be run through each vertical section and connected

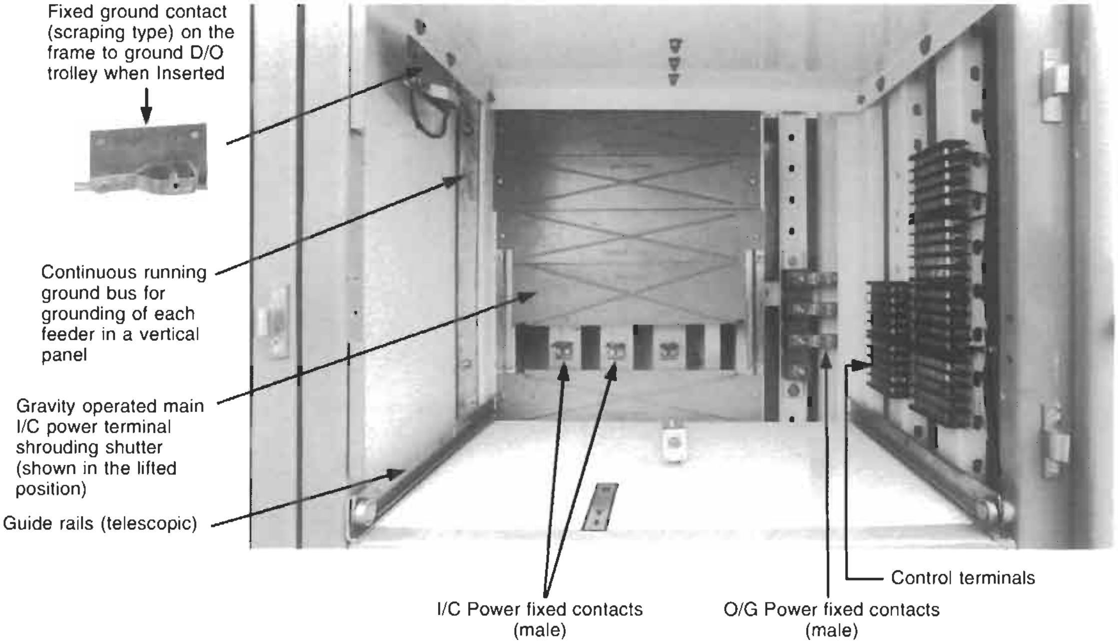

Figure 13.35 View of a module of a fully drawn-out MCC showing grounding arrangement through a continuous running ground bus

to the main ground bus and each individual feeder must be bolted through this. Figure 13.35 illustrates this arrangement through one module of a vertical panel.

3 **Door grounding** Similarly, the door is also a part of the main frame and is automatically grounded through the mounting hinges and the door closing knobs/latches etc. But a separate door ground wire connecting the frame is now also recommended. Where, however, there is no door wiring, no additional door grounding is essential.

Note

For more details on grounding and the grounding practices, refer to Chapters 21 and 22.

13.7.3 Essential features of a draw-out MCC

1 All power and controlgears are mounted on withdrawable chassis (Figure 13.36).

2 The chassis moves on low-friction rolling mounts or guide rails (Figures 13.2 and 13.36).

3 Guide rails are telescopic and are necessary to ensure safe and aligned movement of the trolley while racking it in or out of its module to avoid misalignment of the moving contacts. A misalignment may cause an inadvertent contact of the draw-out contacts with the adjacent fixed contacts of the other phases, which are mounted on the live vertical bus (Figure 13.35) and may cause a flashover and a short-circuit.

4 The chassis for both fully draw-out and semi-draw-out MCCs is fitted with self-aligning plug-in-type high-pressure contacts for incoming and outgoing power connections. The control terminals for control connections are the manually connected, plug-in type in semi-draw-out-type MCC, as shown in Figure 13.13(a) and spring-loaded sliding-type in a fully draw-out MCC, as shown in Figures 13.13(b) and (c).

5 It is preferable to provide a cranking or a push-in device with a latching arrangement to lock the trolley in both service and isolated positions, as shown in Figure 13.36.

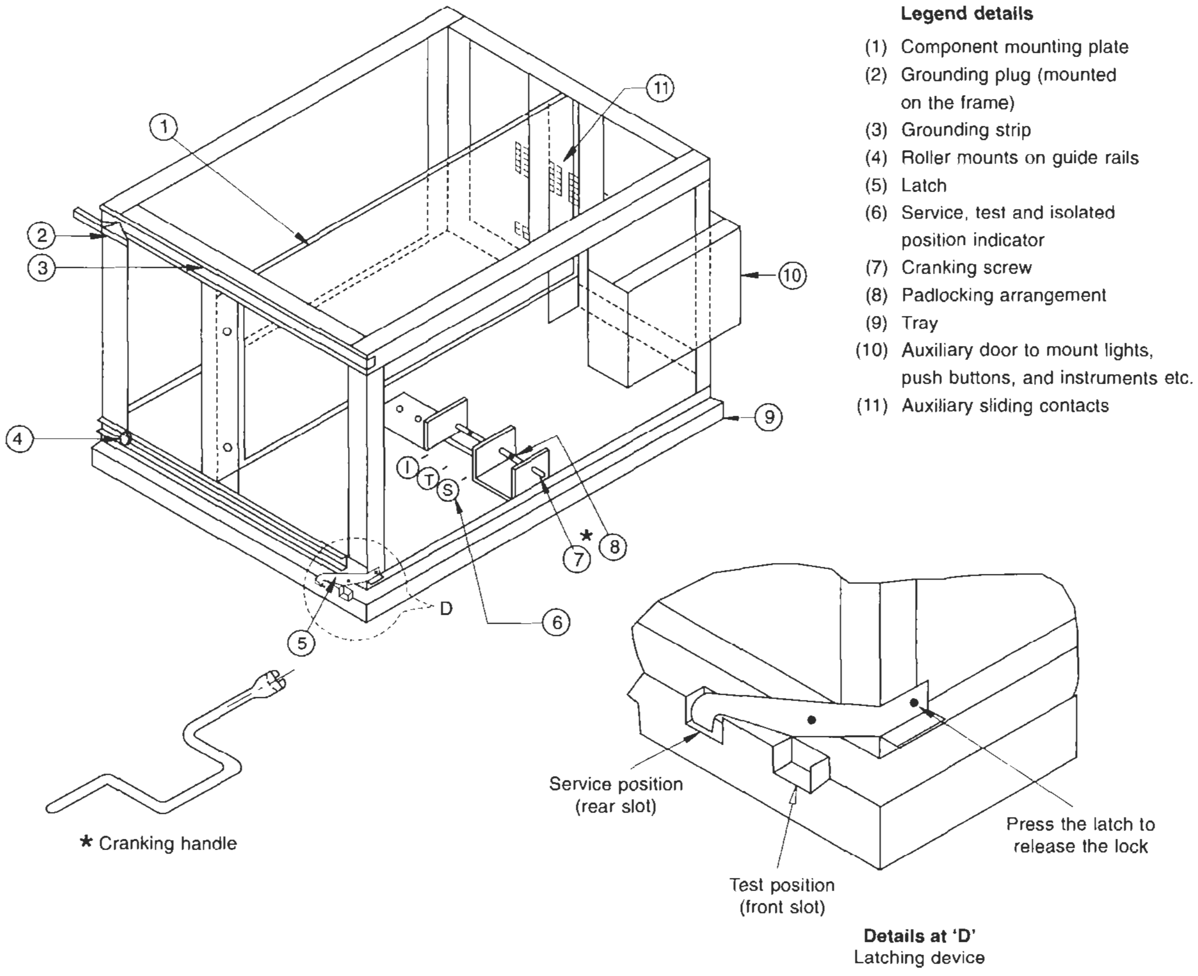

Legend details

(1) Component mounting plate
(2) Grounding plug (mounted on the frame)
(3) Grounding strip
(4) Roller mounts on guide rails
(5) Latch
(6) Service, test and isolated position indicator
(7) Cranking screw
(8) Padlocking arrangement
(9) Tray
(10) Auxiliary door to mount lights, push buttons, and instruments etc.
(11) Auxiliary sliding contacts

Figure 13.36 Front view of a typical withdrawable chassis (trolley)

6 For a positive ground connection and to provide total safety for the operator, a spring-loaded scraping-type grounding assembly may be provided on each trolley so that the moving part can slide on the fixed grounding strip fitted in the assembly, and make before and break after the power contacts have engaged or disengaged respectively. Figures 13.2 and 13.35 illustrate such an arrangement. The grounding contact may be of brass and silver plated (a good practice). It may be fitted on the tray of each module and permanently connected to the ground bus running vertically through each vertical panel and connected to the main horizontal ground bus.

A positive grounding arrangement will mean automatic grounding of the trolley as soon as it is mounted on the tray for racking-in and then remaining in permanent contact with the ground contact when the trolley is fully racked into its service position.

7 In a draw-out MCC, it is recommended that shrouds are provided at the main incoming power contacts, from where the vertical bus is tapped, to feed the draw-out module. Manufacturers may adopt different practices to achieve this. The most common is a DMC/SMC (Bakelite, which was more common earlier, is now being discarded, being hygroscopic and inflammable) gravity-operated drop-down shutter, which lifts automatically while the trolley is being racked in and slides down as the trolley is being racked out. Refer to Figure 13.35, showing a feeder with the shroud lifted. Figure 13.2 also illustrates a few feeders with shrouds fitted. One of the feeders is shown with a lifted shroud.

8 Indicating instruments, lamps, pushbuttons, selector switches and reset knobs etc. are mounted on the trolley on a hinged auxiliary door, as shown in Figures 13.2 and 13.12.

The main outer door on the frame may have either an opening to seat the auxiliary door of the trolley on it or telescopic knock-outs for all such door mounts to provide a peep-through type of aperture. On it are mounted the light and pushbutton tops. Figures 13.2 and 13.12 illustrate this type of arrangement. The latter alternative provides a better arrangement, for it ensures a greater degree of protection. It has the most significant advantage when the trolley is removed from its module and the outer door can still be securely shut on the module to provide total protection for the empty module from dust, vermin and rodents as well as inadvertent human contact with the live incoming terminals. In the other design, the outer door has a large knock-out to seat the auxiliary door, which may remain open when the trolley is removed for repairs or replacement, and expose the interiors.

9 Low contact resistance is desirable at all current-carrying contacts, such as the busbar joints, between busbars and the incoming fixed power contacts, between incoming fixed power contacts and incoming moving power contacts on the trolley and between the outgoing moving and fixed power contacts etc. This is to ensure proper surface-to-surface contact and eliminate arcing between them. Otherwise it may develop hot spots and result in corrosion of the contacts in the normal operation. It may also lead to an eventual failure of the joint/contact.

Note

The main incoming male contacts are generally made of copper or brass and are either bolted or clamped on the vertical bus. Since the bus is generally of aluminium, the contacts may form a bimetallic joint with the busbars and cause corrosion and pitting of the metal. This may result in a failure of the joint in due course. To minimize metal oxidation and bimetallic corrosion, the contacts must be silver plated.

If the main incoming male contacts are made of aluminium alloy, which is normally a composition of aluminium-magnesium and silicon, they must be provided with a coat of bronze, copper and tin to give it an adequate mechanical hardness and resistance to corrosion. For more details refer to Section 29.2.5.

10 Each trolley is recommended to possess three distinct positions of movement, as shown in Figure 13.36, i.e. 'service', 'test' and 'isolation':
Service: this is the position of the trolley when it is fully inserted into its housing (module) and the power and control contacts are fully made.
Test: This is the position of the trolley when the power contacts are isolated but the control circuit is still connected, because it is tapped directly from the auxiliary bus. This condition is essential to facilitate testing of control circuits with functional interlocks, without energizing the connected load.
Isolation: This is the position of the trolley when the power and the control circuits are both isolated. Depending upon the site requirements, sometimes the control circuit may be required to be still energized for some test requirements.

11 The feeder door should not close unless the trolley is racked-in, up to the test position at least.

12 The trolley should not permit its withdrawal when its switch is in the ON position.

13 While racking-out the trolley, it should not be possible to completely withdraw it unless it has reached the 'isolation' position. In the isolation position there must be a 'holding-on' latch arrangement, to prevent an abrupt fall of the trolley from its module. Figure 13.36 illustrates this feature.

14 Interchangeability of a module with another module of the same type and size is the basic requirement of such panels.

15 Provision of an extra interlocking facility (peg and hole system) may also be essential to prevent interchangeability between two similar trolleys when the circuits or the functions of the two otherwise identical trolleys are different, and it is undesirable to interchange these trolleys.

16 Withdrawal of a draw-out circuit breaker or a withdrawable switch or contactor will not be possible unless they are in an OFF position.

17 Operation of withdrawable equipment, such as a breaker or components on a withdrawable chassis, will not be possible unless it is in service, test, isolated or totally removed positions.

13.7.4 Requirements other than constructional features

1 **Mechanical and electrical interlocks**
   - An industrial load having a connected load requirement of more than 2000 kVA may normally call for more than one feeding transformer for limiting the fault level of the system, as discussed in Section 13.4.1(5). It may also have a standby emergency source of supply. The two feeding transformers, although they may be identical electrically and suitable for parallel operation, are not supposed to run in parallel with a view to limiting the fault level. The emergency source, as a result of different electrical parameters, is not run in parallel with any of the two incoming sources. To achieve the required safety by avoiding a parallel operation, it is essential to provide a mechanical or an electrical interlock or both between all the incoming feeders. Schemes to achieve the required safety interlocks are described in Section 13.7.5.
   - When there are more than one sources of supply, it is recommended to distribute the loads also in as many sections as the incomers, and provide a tie-circuit between every two sections, to obtain more flexibility. Now fault on one section or source of supply will not result in the loss of power to the entire system. Figures 13.16 and 13.17 illustrate this type of distribution.

2 Potential/control transformers must be provided with current limiting fuses at both ends.

3 **Control wiring** Wiring from supervisory or annunciator devices to the terminal blocks may be carried out with smaller wires, as may be recommended for such devices. However, they should run through separate wire bunches, and not through the bunches of control wires for easy identification and to remain unaffected by heat of control wires.

4 For easy identification and prompt maintenance it is mandatory to segregate all control wires when they are carrying more than one control supply (e.g. at different voltages and both a.c. and d.c.), and run them in separate bunches. The control wires must also be of different colours for different control supplies. The colour codes have been standardized for different control supplies (refer to IEC 60445).

5 **Space heaters with temperature control** These are recommended with a view to eliminate condensation of moisture, particularly when the switchgear is idle and the atmosphere is humid. The space heaters are normally rated for $V_r/\sqrt{3}$, 40 W, single phase. They are located appropriately such as in the cable alley, and are switched ON when the switchgear is likely to be idle for a long period. The number of space heaters will depend upon the size and type of the switchgear. For a cubicle-type panel, it is recommended that at least one space heater be provided in each vertical panel. They should be mounted at the lower portion of the panel for better heat circulation through natural heat convection.

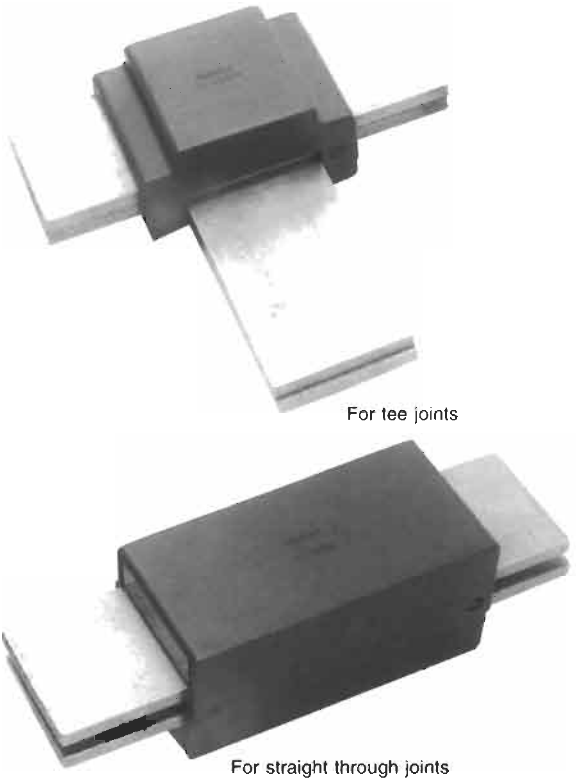

Figure 13.37(a) Pressfit SMC/DMC shrouds for busbar joints

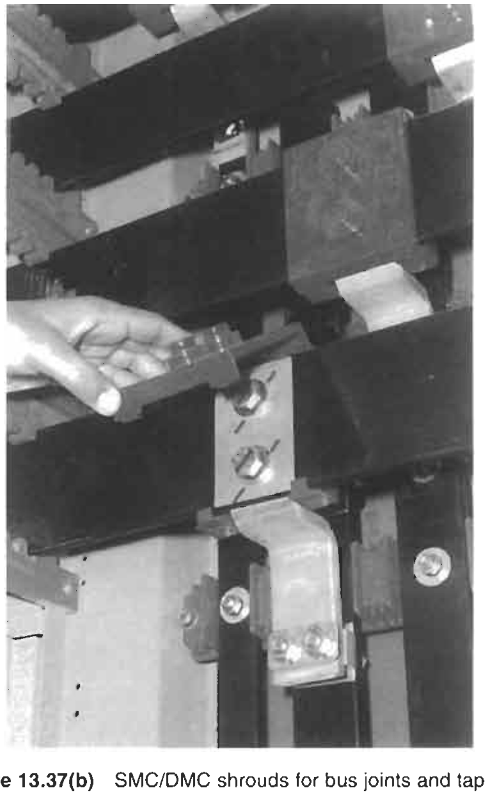

Figure 13.37(b) SMC/DMC shrouds for bus joints and tap-offs

Figure 13.34 illustrates a likely location for such a heater. To prevent condensation of moisture they are recommended to reach a temperature rise of only 5–10°C above the ambient temperature, inside the housing and are controlled automatically through a pre-set thermostat.

6 A three-pin socket, rated for $V_r/\sqrt{3}$, 5 A, may also be provided for panel lighting or hand lamp (Figure 13.34).

7 Panel numbering on acrylic sheet or aluminium anodized plates may be fixed on the front and the rear of each vertical panel for quick identification of each panel section (Figure 13.1).

8 For safety to personnel during maintenance and to protect the live system from lizards and rodents the busbars may be covered with PVC tape or heat-shrinkable PVC sleeve. The joints and the tap-offs can be protected through SMC/DMC shrouds, as shown in Figure 13.37. The PVC taping, however, is not recommended for it may suffer cuts or tear off during working on the busbars and become loose or worn with time. PVC sleeving is a more recommended practice but sleeving may impose limitations. It is possible that one may not be able to provide a true skin-fit sleeve through the length of the busbars, which may affect its cooling. At certain places, it may have air bubbles from where it will provide a reduced heat dissipation.

For higher rating systems, say 2500 A and above, sleeving is normally not used. Instead, a non-metallic, semi-glossy black paint may be provided to make the bus conductors act like a black body and dissipate more heat. This will also add to the current-carrying capacity of the busbar system. Painting is not a measure of safety but a technique to enhance the current carrying-capacity of the busbar system. For safety during maintenance, some other form of shrouding can be provided, such as by providing SMC/DMC shrouds at all such places where the live bus may be exposed to the operator attending to maintenance work.

Figure keys

Figure locks

Figure 13.38 Castle figure locks and keys

9 For precautions in making joints, refer to Section 29.2.

10 Painting. A thorough surface treatment of the sheet-metal and a good painted surface are prerequisites for equipment to provide long years of operation. For the benefit of those in the field of manufacturing of such assemblies, we have provided a brief procedure for the sheet treatment and surface painting of these assemblies in the Appendix.

The above are the more obvious constructional, design and safety features for a switchgear or a controlgear assembly. For more details and additional requirements refer to IEC 60439-1 for LT, IEC 60298 and IEC 60694 for HT and ANSI-C-37/20C, common for LT and HT switchgear and controlgear assemblies.

13.7.5 Interlocking of feeders to prevent parallel operation

Mechanical interlocking scheme

Use of castle locks

Different figure locks such as $\boxed{\text{A} -}$, $\boxed{- \text{B}}$ and $\boxed{\text{AB}}$ are used with a common master key $\boxed{\text{AB}}$ (Figure 13.38). The master key can unlock all locks $\boxed{\text{A} -}$, $\boxed{- \text{B}}$ or $\boxed{\text{AB}}$ but will be locked with the lock that it unlocks. To remove the key, the lock must be locked first. Then only the key can be used for the other locks and thus achieve the required interlocking. The lock holds the lever of the closing mechanism of the interrupter and prevents it from closing. The number of locks will be the same as the number of interrupting devices, but the keys will be less and will be for only as many interrupting devices as are permitted to be switched at a time (generally equal to the number of supply sources).

Two sources of supplies (Figure 13.39)

The two incomers (I/C), fed from two different sources, can be fitted with two locks $\boxed{\text{A} -}$ and $\boxed{- \text{B}}$, and one master key $\boxed{\text{AB}}$. This key will allow only one incomer to be switched at a time.

Two sources of supplies and a bus coupler (Figure 13.40)

The two incomers (I/C) and the coupler can be fitted with three locks, $\boxed{\text{A} -}$, $\boxed{- \text{B}}$ and $\boxed{\text{AB}}$, and two

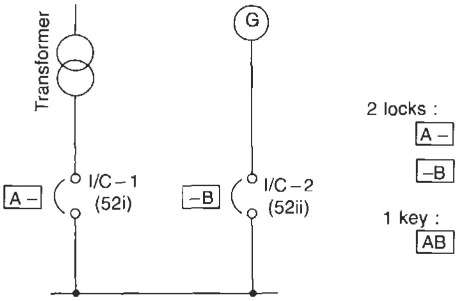

Figure 13.39 Two sources of supply

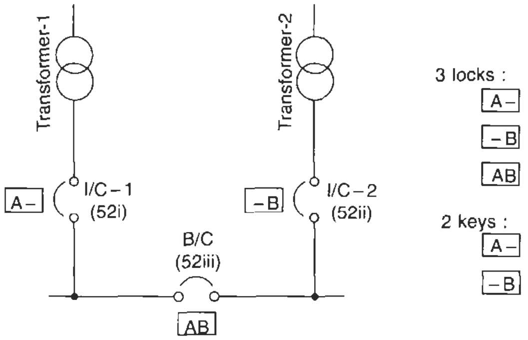

Figure 13.40 Two sources of supply and a bus coupler

keys $\boxed{A -}$ and $\boxed{-B}$: locks $\boxed{A -}$ and $\boxed{-B}$ for the incomers and $\boxed{AB}$ for the coupler. The key $\boxed{A -}$ can operate I/C-1 or the coupler and key $\boxed{-B}$ can operate I/C-2 or the coupler. Thus, only two of the three interrupting devices, I/C-1 and coupler, I/C-2 and coupler, or I/C-1 and I/C-2 can be switched at a time to achieve the required interlocking.

Three sources of supplies and two bus couplers (Figure 13.41)

The three incomers and two couplers can be fitted with five locks, $\boxed{A -}$, $\boxed{-B}$, $\boxed{C -}$, $\boxed{AB}$ and $\boxed{CB}$ and three keys $\boxed{A -}$, $\boxed{-B}$, and $\boxed{C -}$.

The interlocking is achieved as follows:

Key $\boxed{A -}$ – can allow switching of I/C-1 or coupler 1

$\boxed{-B}$ – can allow switching of I/C-2, coupler 1 or coupler 2

and $\boxed{C -}$ can allow switching of I/C-3 or coupler 2

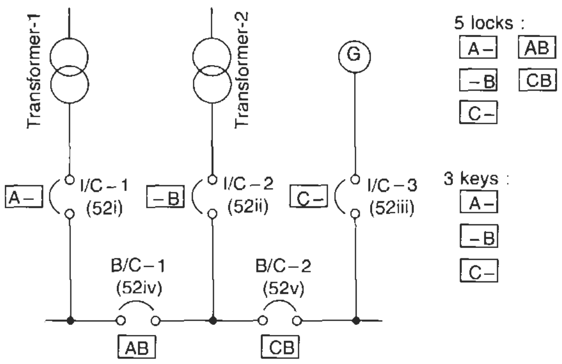

Figure 13.41 Three sources of supply and two bus couplers
Figures 13.39–13.41 are mechanical interlocking schemes

Thus, only three of the five interrupting devices can be switched at a time as required without causing a parallel operation between any of the two incomers.

For a larger number of supply sources, each having two interrupting devices, one as incomer and the other as coupler, two more locks, i.e. $\boxed{-D}$ and $\boxed{CD}$ and one key, i.e. $\boxed{-D}$ may be added for each extra source and so on.

Note
The mechanical interlocking scheme is generally required for manually operated interrupting devices not fitted with electrically operated tripping mechanisms such as an undervoltage (U/V) or a shunt trip (S/T) release. A switch or a switch fuse unit (SFU or FSU) is a device that cannot be provided with an electrically operated tripping mechanism. Sometimes even manually operated breakers or MCCBs which can be fitted with an U/V or S/T are required to have a mechanical interlocking scheme, although this is not a preferred method when an electrical interlocking scheme is possible. This aspect is discussed later.

When the breaker (including an MCCB) is provided with an electrical closing mechanism through a motor or a solenoid, mechanical interlocking is not recommended as mechanical interlocking will make electrical closing redundant, for obvious reasons.

Electrical interlocking scheme (when the interrupters are manually operated)

The preferred way to achieve interlocking between more than one source of supplies is through electrical schemes only, wherever possible. They are foolproof and can also be operated remotely. Mechanical schemes are generally for smaller installations where, as a result of smaller ratings or cost considerations, a breaker is not used and that imposes a limitation on adopting an electrical interlocking scheme.

The electrical interlocking should preferably be provided through shunt trip releases. It must have a separate a.c. or d.c. source of control supply, such that the operation of the scheme is independent of the main source of supply. For the same reason, interlocking through undervoltage (U/V) releases is not recommended as its operation would be dependent on the condition of supply. An U/V release is generally fitted to trip the interrupting device when the supply ceases and not for any other control schemes.

The schemes are logical and simple and have been drawn, to ensure that no two supply sources can ever be switched in parallel. The scheme prevents to switch an interrupter, that may cause it to operate in parallel with another, unless the first source is opened first. This is illustrated in the following schemes;

Two sources of supplies (Figure 13.42)

The NO (normally open) contact of I/C-1 (52*i*) is wired in the trip circuit of I/C-2 (52 ii) and vice versa. As soon as an interrupter is closed, the tripping circuit of the other gets ready to trip.

Note

The function of a shunt trip coil is to trip an interrupter. As soon as its coil is energized, it releases the closing lever of the interrupter and trips it. The coil is rated for a short time, since it is in the circuit for a very short period only when it is required to trip the interrupter. To ensure that it does not continue to remain energized after carrying out its function, the interrupter's 'NO' contacts are also wired in series with the coil as shown. The coil becomes de-energized as soon as the interrupter trips. Normally two NO contacts of the interrupter are wired in series, as standard practice, by the interrupter (breaker or MCCB) manufacturers to share the arc energy on a trip and enhance contact life, particularly when the control supply is d.c. which is normally the case.

Two sources of supplies and a bus coupler (Figure 13.43)

The logic is the same as above. In the trip circuit of each interrupter is wired the NO contacts of the other two interrupters. Obviously only two of the three interrupters can be switched at a time.

Three sources of supplies and two bus couplers (Figure 13.44)

The scheme is now more complicated but the following logical approach will make it simple:

(a) When I/C-1 (52i) is required to be switched

- (i) Interlocking with I/C-2 (52ii): I/C-2 (52ii) and B/C-1 (52 iv) should not be in a closed position at one time.
- (ii) Interlocking with I/C-3 (52iii): I/C-3 (52iii), B/C-1 (52iv) and B/C-2 (52v) should not all be in a closed position at one time. Refer to the control scheme for I/C-1 (52i).

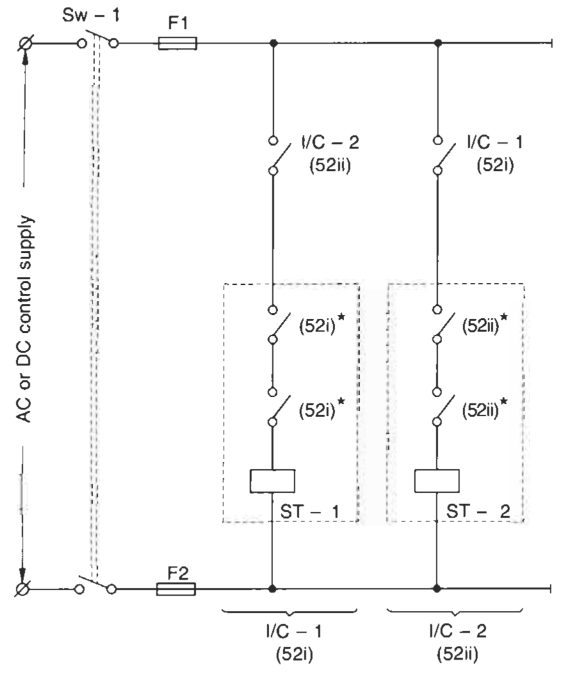

Legends details

Sw – 1 – Control supply ON/OFF switch
$F_1 - F_2$ – Control fuses
ST_1, ST_2 – Shunt trip coils of breakers
I/C – 1, 2 or 52(i, ii) – Incoming sources of supplies

**Note* Normally 2NO's of the interrupters are wired in series to share the arc energy and enhance the contact life.

Figure 13.42 Electrical interlocking scheme for manually operated breakers for two sources of supplies

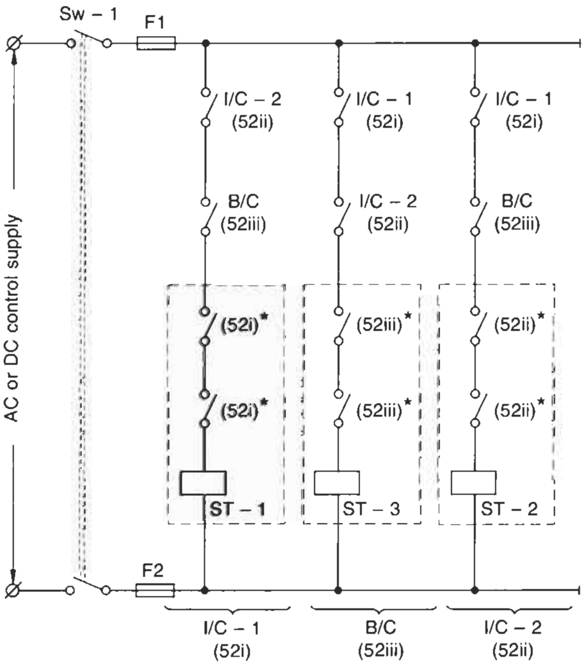

Legends details

Sw – 1 – Control supply ON/OFF switch
$F_1 - F_2$ – Control fuses
ST_1, ST_2, ST_3 – Shunt trip coils of breakers
I/C – 1, 2 or 52(i, ii) – Incoming sources of supplies
B/C – 1 or 52(iii) – Bus coupler

**Note* Normally 2NO's of the interrupters are wired in series to share the arc energy and enhance the contact life.

Figure 13.43 Electrical interlocking scheme for manually operated breakers for two sources of supplies and a bus coupler

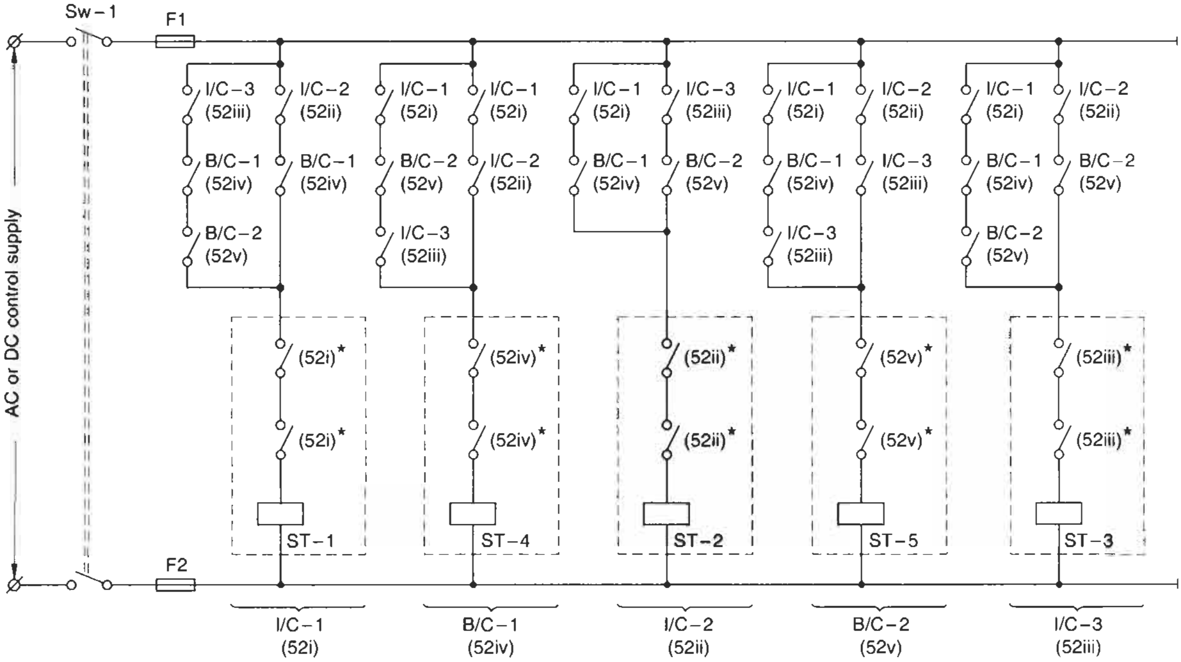

Legends details

Sw – 1 — Control supply ON/OFF switch
F_1 – F_2 — Control fuses
ST_1, ST_2, ST_3, ST_4 and ST_5 — Shunt trip coils of breakers
I/C-1,2,3 or 52(i,ii,iii) — Incoming sources of supplies
B/C-1,2 or 52(iv,v) — Bus couplers.

**Note* Normally 2NO's of the interrupters are wired in series to share the arc energy and enhance the contact life.

Figure 13.44 Electrical interlocking scheme for manually operated breakers for three sources of supplies and two bus coupler.

(b) When I/C-2 (52ii) is required to be switched
- (i) Interlocking with I/C-1 (52i): I/C-1 (52i) and B/C-1 (52iv) should not both be in a closed position at one time.
- (ii) Interlocking with I/C-3 (52iii): I/C-3 (52iii) and B/C-2 (52v) should not both be in a closed position at one time. Refer to the control scheme for I/C-2 (52ii).

(c) When I/C-3 (52iii) is required to be switched
- (i) Interlocking with I/C-2 (52ii): I/C-2 (52ii) and B/C-2 (52v), should not both be in a closed position at one time.
- (ii) Interlocking with I/C-1 (52i): I/C-1 (52i), B/C-1 (52iv) and B/C-2 (52v) should not all be in a closed position at one time. Refer to the control scheme for I/C-3 (52iii).

(d) When B/C-1 (52iv) is required to be switched
- (i) Interlocking with I/C-1 (52i) and I/C-2 (52ii): These should not be in a closed position at one time.
- (ii) Interlocking with I/C-1 (52i) and I/C–3 (52iii): I/C-1 (52i), B/C-2 (52v) and I/C-3 (52iii) should not all be in a closed position at one time. Refer to the control scheme for B/C-1 (52iv).

(e) When B/C-2 is required to be switched
- (i) Interlocking with I/C-2 (52ii) and I/C-3 (52iii): Both should not be in a closed position at one time.
- (ii) Interlocking with I/C-1 (52i) and I/C-3 (52iii): I/C-1 (52i), B/C-1 (52iv) and I/C-3 (52iii) should not all be in a closed position at a time. Refer to the control scheme for B/C-2 (52v).

Electrical interlocking scheme when the interrupters are also electrically operated

Motor-operated interrupting devices are employed when the system requires remote-controlled power switching, as for an auto-reclosing scheme. The electrical interlocking schemes remain generally the same, as discussed earlier, but with an additional circuit for the motor spring charging mechanism and the closing coil of the interrupter. Brief details of the electrical closing features are as follows.

Spring charging motor mechanism
The purpose of the motor is to charge the closing spring that closes the interrupter, independently of the speed and operation of the motor or of the operator when closed manually. (The interrupter can be closed manually or

electrically when the spring is fully charged.) As soon as the spring is discharged, the motor recharges it automatically to prepare it for the next operation. The motor may be fed through the same source as for the main control scheme or another source, depending upon the system design. But the source must be reliable and independent of the main power supply as far as possible (such as through a battery).

Note
Small interrupters and MCCBs particularly may be electrically operated through a solenoid valve.

Limit switch (LS)
The spring charging mechanism is fitted with a limit switch, having generally 2NO and 2NC change-over contacts. The 2NC contacts are wired in series with the motor to allow it to charge the spring mechanism immediately on discharge of the spring, to prepare it for the next operation. As soon as the spring is fully charged, the NC contacts change over to NO and cut off the supply to the motor terminals (Figure 13.45).

The 2NO contacts of the limit switch are wired in series with the closing coil of the interrupter (Figure 13.45). As soon as the spring is fully charged these contacts change over to NC and the closing coil circuit gets ready to close.

Closing coil (CC)
The charged closing spring may be released manually or electrically by energizing a closing coil as shown in Figure 13.45.

Breaker control switch (CS)
To close or trip the interrupter locally or remotely a breaker control switch is also wired with the closing and the shunt trip coils of the interrupter, as shown in Figure 13.45. The switch is a spring return type to ensure that it resumes its original (neutral) position as soon as it has carried out its job of closing or opening the interrupter. With the above features in mind, the control logic for the various interlocking schemes becomes simple as shown in Figures 13.45–13.47:

- Two sources of supplies: Figure 13.45.
- Two sources of supplies and a bus coupler: Figure 13.46.
- Three sources of supplies and two bus couplers: Figure 13.47.

13.8 HT switchgear assemblies

Use of an LT switchgear assembly is more frequent than

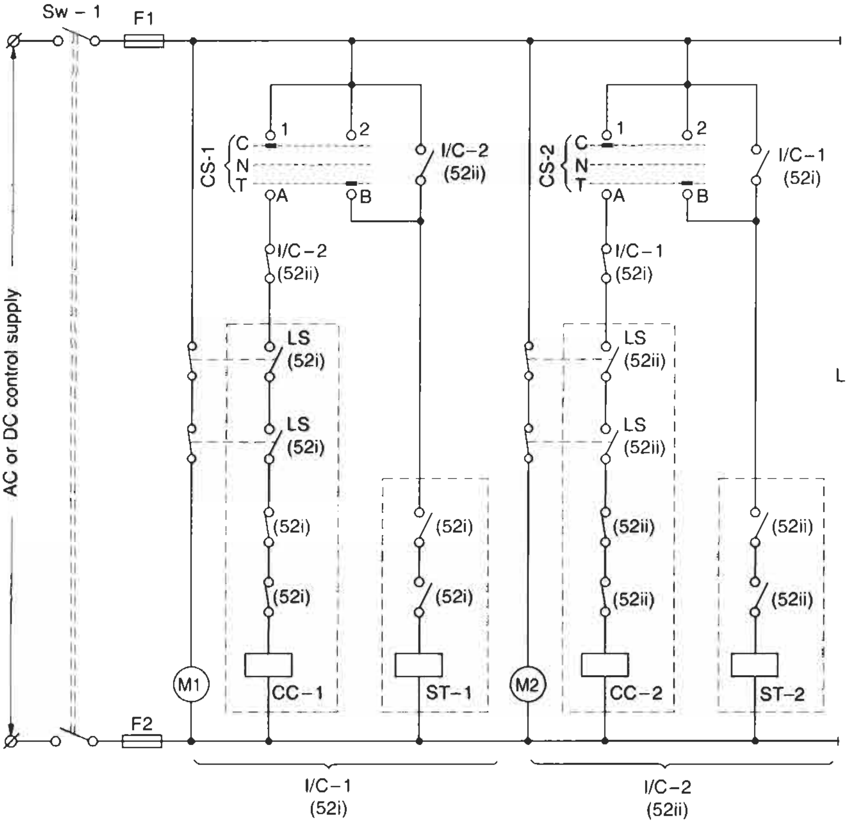

Contact No.	C	N	T
1–A	X	●	●
1–B	●	●	X

Contact arrangement of CS

Legend details:—

CC–1,2, -----	— Closing coils of interrupters
CS–1,2, -----	— Breaker control switches (spring return to neutral)
M1,2, -----	— Spring charging motors
LS	— Limit switches with spring charging mechanism

Figure 13.45 Control scheme for two electrically operated sources of supplies

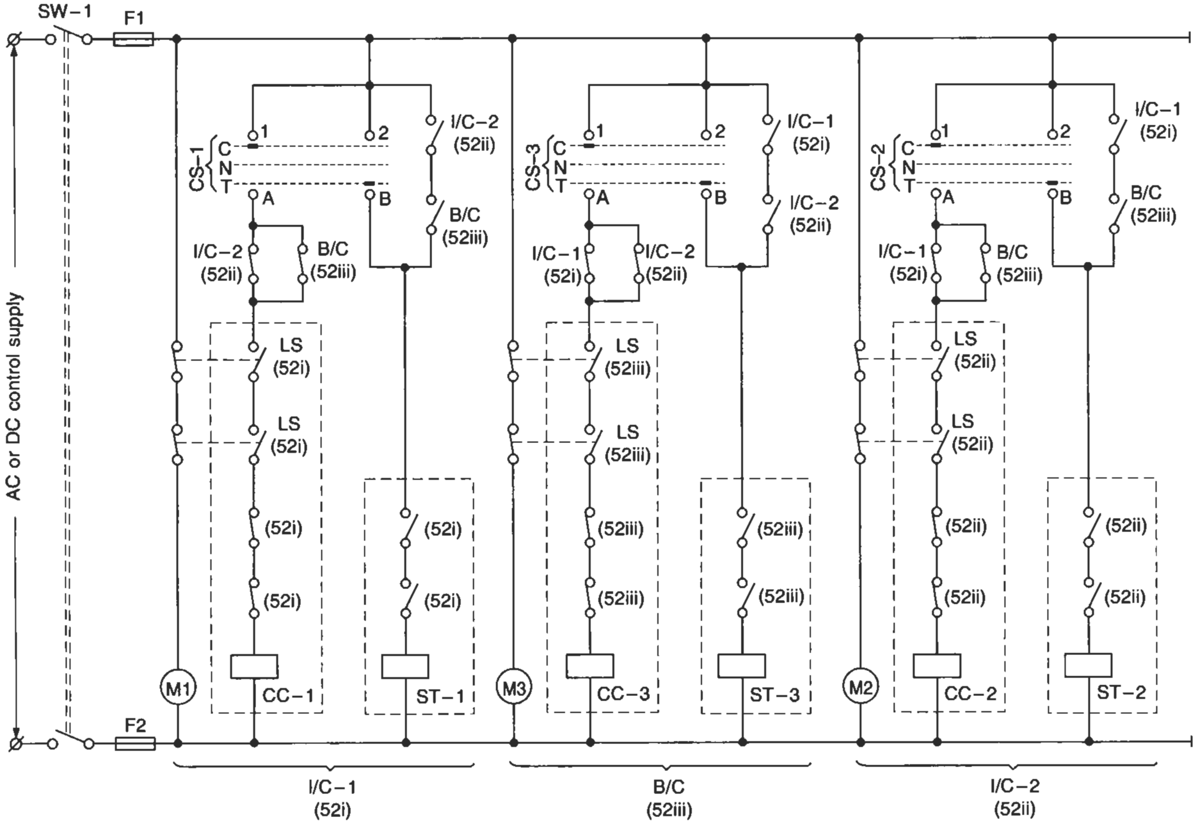

Figure 13.46 Control scheme for two electrically operated sources of supplies and a bus coupler

that of an HT switchgear assembly. Moreover, HT assemblies above 33 kV are generally the outdoor type and installed in the open. The discussions above have therefore laid greater emphasis on the features of an LT switchgear assembly. The features for an HT assembly up to 33 kV are not very different except for thicker enclosure and heavier load-bearing members, to carry larger HT equipment (interrupting devices, CTs, PTs, insulators etc.). The clearances and creepage distances will also be greater, according to the system voltage (Section 28.5.2). For more details refer to IEC 60298, IEC 60694 and ANSI-C-37/20C.

13.9 General guidelines during installation and maintenance of a switchgear or a controlgear assembly

1 **Installation and fixing** The assembly should be installed in a room that is well ventilated (except for outdoor assemblies), on a rigid concrete or steel foundation to eliminate vibrations. A simple and more common practice of fastening on a separate steel foundation frame is illustrated in Figure 13.48. The assembly may also be fixed on a concrete foundation directly, but this will be found to be more cumbersome and time-consuming.

2 **While putting into service**
   - One may follow field tests as discussed in Section 14.5 before putting the switchgear or the controlgear assembly into service.
   - If the insulation resistance is observed to be low the interior of the switchgear or the controlgear assembly should be dried out to attain the required value before energizing it. The procedure to dry the moisture is similar to that for motors and is discussed in Section 9.5.2. In this case during the heating-up period the insulation resistance may first drop and reach its minimum, stabilize at that level and then start to rise gradually. Continue the process until it reaches its required level as shown in Table 14.7.
   - In HT switchgear assemblies provide a surge arrester or a lightning arrester, wherever necessary. Also refer to Section 17.11.
   - It is advisable that all the protective devices provided in the assembly be set to their minimum values to ensure fast tripping. They can be adjusted for proper settings when putting the assembly into service.

3 **Maintenance of busbars and busbar connections**
   - All the joints, particularly power joints at the main busbars, tap-offs and cable ends, should be checked

(Contd.)

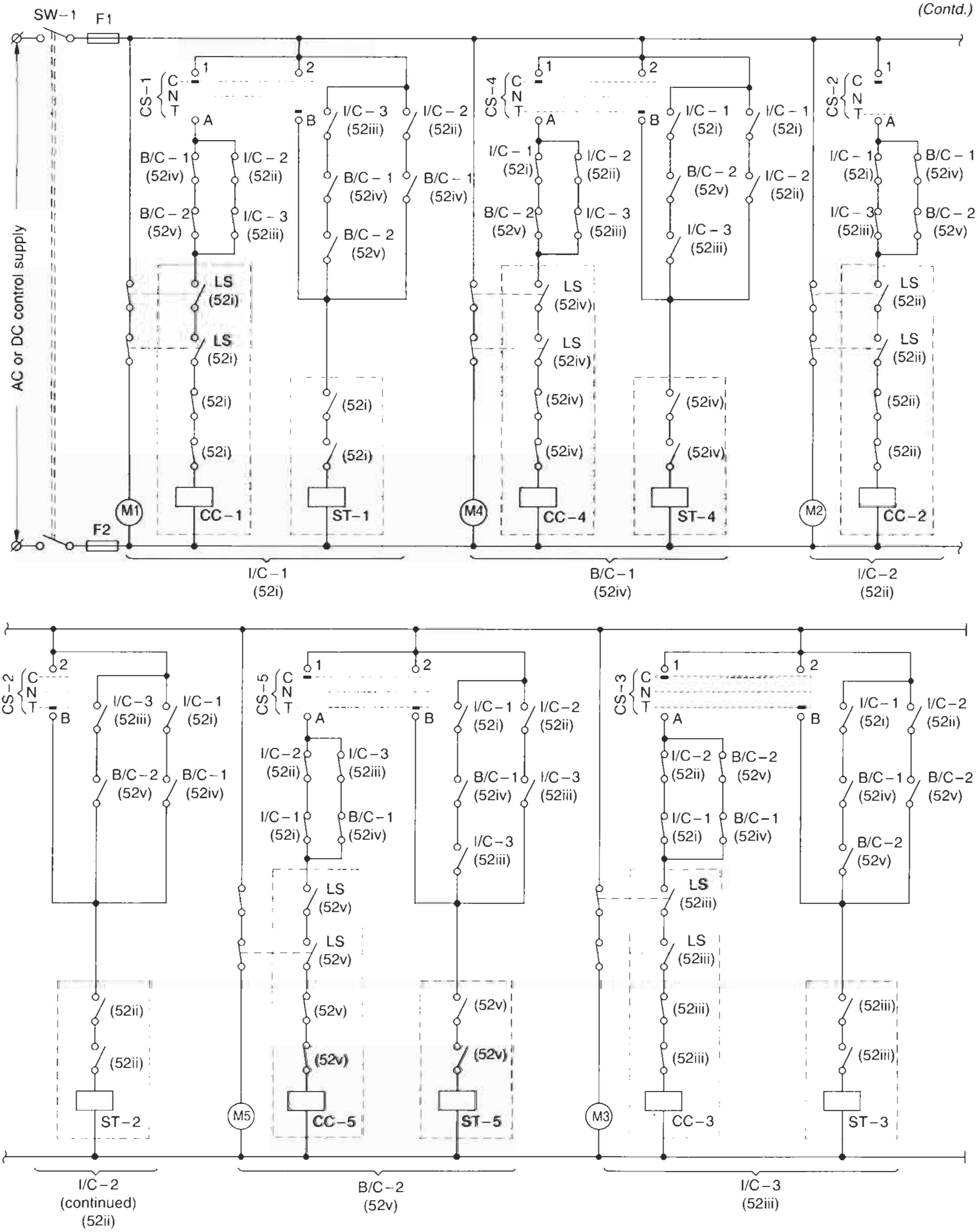

Figure 13.47 Control scheme for three electrically operated sources of supplies and two bus couplers

periodically for any pitting or loosening. Such a check is recommended at every six months of operation and must be carried out meticulously, particularly for aluminium busbar joints and cable terminations. Aluminium is a highly malleable and ductile metal and under high temperatures and pressures has a tendency to run out and loosen its grip. At locations that are critical, contaminated or humid, or that are subject to vibrations, the period of maintenance checks may be reduced based on experience. A logbook can also be maintained to monitor the variance in important parameters and to take preventive measures during operation.

- **Draw-out components**
  - In a draw-out MCC all current-carrying components should be periodically checked for their silver-plating, proper contact area, spring pressure and tightness of joints (this procedure can follow the manufacturer's maintenance schedule) or at least during the six-monthly or yearly maintenance check ups of the busbars and the busbar joints as noted above. The contacts or their springs may be replaced when the contacts are worn out or the silver-plating is withered. Silver prevents oxidation of copper contacts and also eliminates bimetallic corrosion.

Note
Tarnishing (blackening) of contacts is a common characteristic of silver-plated contacts. It is the formation of silver oxide film which is a good conductor of heat and electricity is not a cause for concern.

  - Clean and lubricate all the main incoming and outgoing power contacts as well as the auxiliary sliding contacts at least once a year. Use of neutral grease as noted in Section 13.6.1(iv) is recommended. A properly greased contact will also help to avoid a flashover.
  - For cleaning of contacts, use white petrol or carbon tetrachloride or perchloro-ethylene. Never use sandpaper for it may damage the silver-coating and also render the surface uneven which may cause arcing and pitting during operation. While cleaning, care must be taken that the solvent does not reach the insulating components.

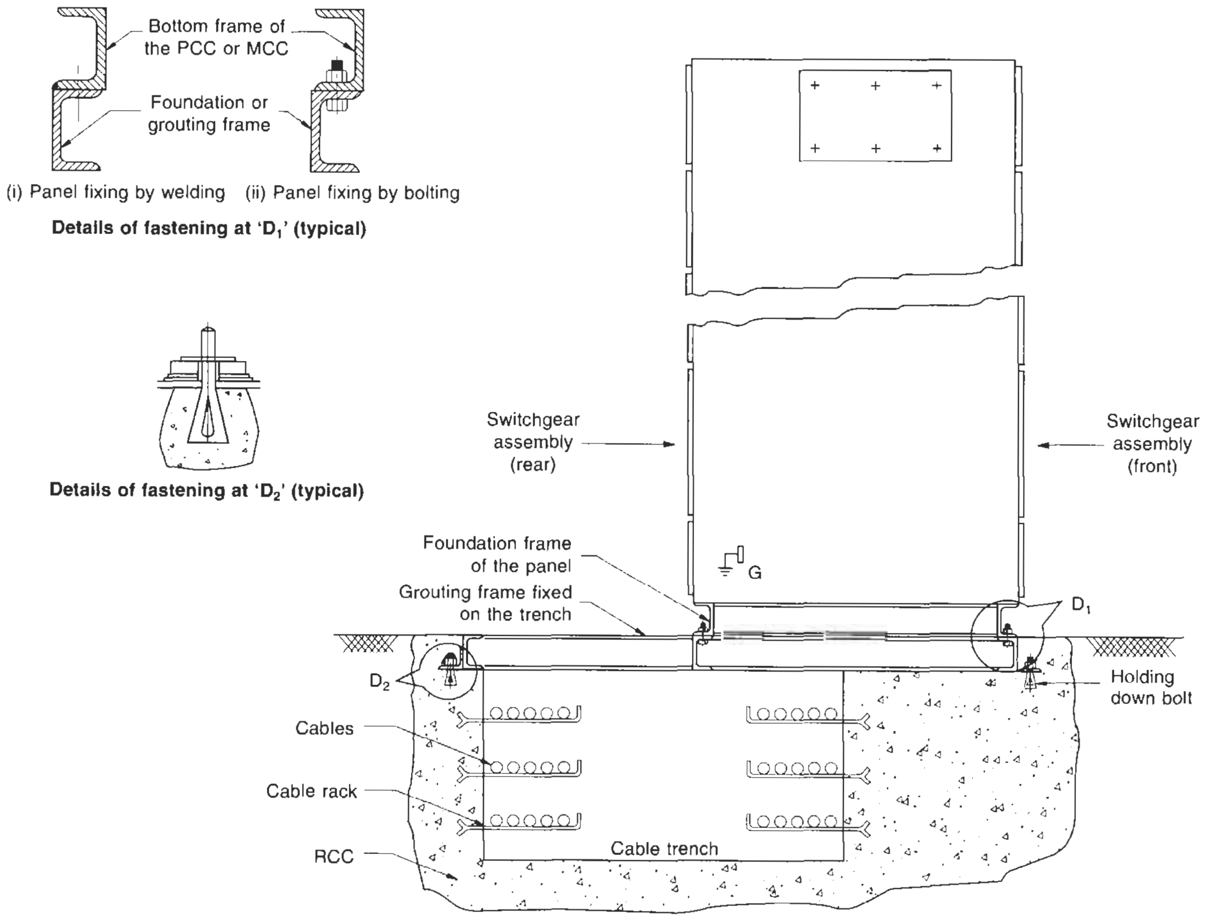

Figure 13.48(a) Illustration of a typical installation of high-rating switchgear assembly on a cable trench

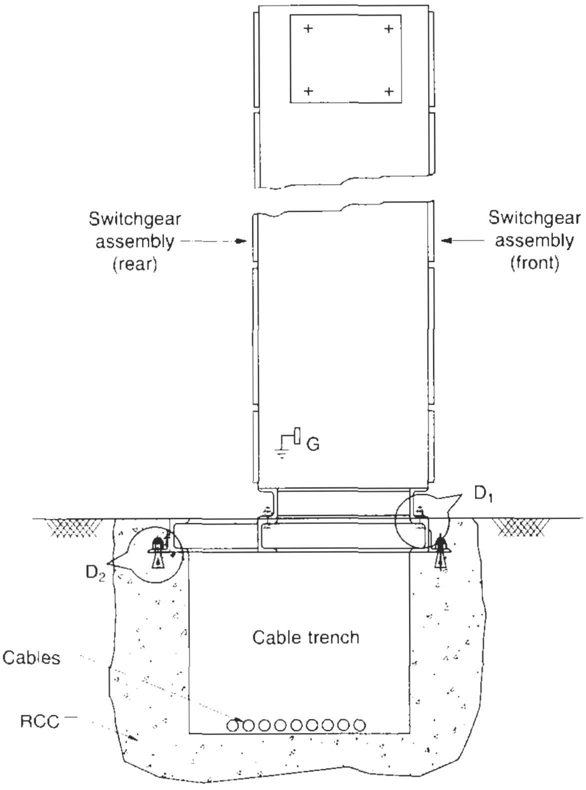

Figure 13.48(b) A typical installation of a low-rating switchgear assembly on a cable trench

- The cranking screw and the guide rails on which the trolley slides must also be coated with ordinary grease to provide a smoother operation and to prevent corrosion.
- Check the grounding contacts periodically for their positive ground connections.

For the sake of brevity, this subject is not dealt in with great detail here. Refer to IEC 60694 and BS 6423.

4 **Discharging of a power capacitor** Whenever power capacitors are installed in a switchgear assembly and are not discharged automatically on a switch OFF, through its own interrupting device, these must be discharged manually by grounding its terminals before its feeder devices and components are physically handled.

13.10 Power circuits and control scheme diagrams

For a ready reference to the readers, we provide power and control scheme diagrams, usually required in day-to-day use, while wiring an MCC or a control panel, or maintenance at site.

All the control circuits are based on conventional electrical and electromagnetic (auxiliary contactors and timers) controls. The latest trend for large or complicated controls, however, is to have more compact, accurate and quick-responding PLC and microprocessor-based controls, as discussed in Section 13.2. The logistics for PLCs or microprocessors are also the same as for electromagnetic controls.

13.10.1 Interlocking and control scheme for a typical air-conditioning plant

For the application of individual schemes, as illustrated above and an easy understanding of these schemes, we consider below a conventional type of air-conditioning plant for its various controls, interlocks and operating requirements.

This type of air-conditioning plant may have the following three closed circuits:

1 Refrigerant circuit: Figure 13.49(a) is a flow diagram for the refrigerants. The refrigerant used presently is chlorofloro carbon (CFC-11, 12, 113, 114 or 115) but use of this gas is being gradually discontinued (by 2000 latest 2005) as this causes ozone layer depletion and global warming. It shall be gradually replaced by hydrochloro fluro carbons (HC FC-22, 123, 141 and 142). But this too is not totally environment friendly and shall be replaced by 2040 (latest) by hydro fluoro carbons (HFC-134a) which will be more safe. However, research is on to invent yet better blends of refrigerants which may be quite environment friendly. [For more information on refrigerants refer to UNEP IE/PAC (United Nations Environment Programme, Industry and Environment Programme Centre, USA].
2 Condenser water circuit: Figure 13.49(b) is a flow diagram for the condenser water.
3 Chilled water circuit: Figure 13.49(c) is a flow diagram for the chilled water.

The power circuit single-line diagram is shown in Figure 13.50. The following are the controls and protections that may be generally required for such a plant.

Compressor

Control of the compressor is achieved by engaging the required number of cylinders. In, say, a 16-cylinder compressor if we engage only four cylinders, the compressor will run at 25% capacity, and if we engage eight cylinders, the compressor will run at 50% capacity. Electrically operated solenoid valves are provided for capacity control. Energy can be conserved by using static controls, as discussed in Section 6.15.

For protection and temperature control of the compressor the following safety devices may be provided:

- Water flow switches
- High/low pressure cut-outs
- Lube oil pressure switch and
- Safety thermostat

Air-handling unit (AHU)

To control the room temperature flow of chilled water is controlled in AHU, Figure 13.49(c). A thermostat senses the room condition and activates a motorised solenoid valve in AHU coil which in turn adjusts the flow of

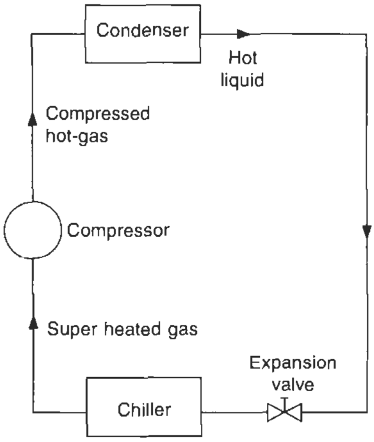

Figure 13.49(a) Refrigerant circuit (typical)

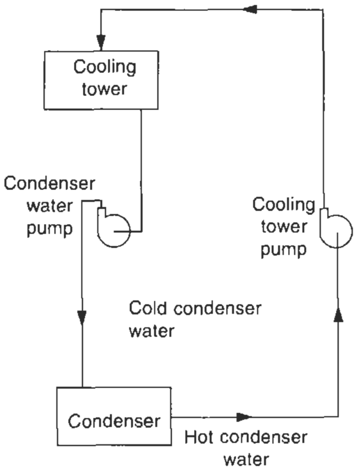

Figure 13.49(b) Condenser water circuit (typical)

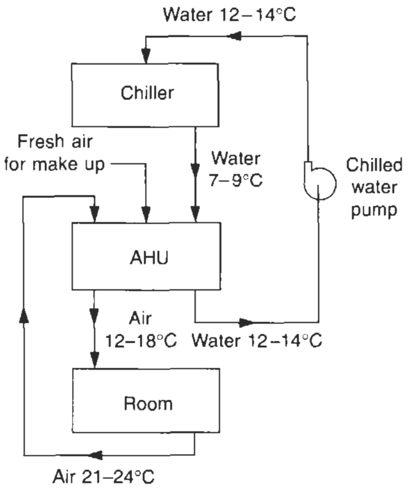

Figure 13.49(c) Chilled water circuit (typical)

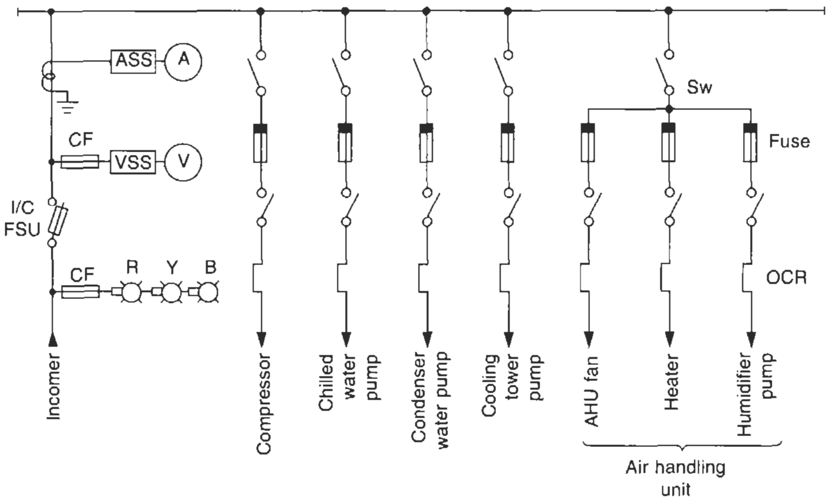

Figure 13.50 Single line power diagram for a typical air conditioning plant

chilled water to the required level. There are other methods also in practice such as by pass of certain amount of air through coil and variable speed fan drive (for energy conservation) (section 6.15).

Humidity control

To control the humidity in a conditioned space humidifiers and reheaters are provided in AHU. Humidifiers to increase and reheaters to decrease the humidity.

Electrical interlocks between the drives

The following interlocks are generally provided between the various drives:

- The condenser water pump will not start unless the cooling tower fan is already running.
- The chilled water pump will not start unless the condenser water pump is also running.
- The compressor will not start unless the chilled water and condenser water pumps are also running.

The control and protection scheme diagram for all the above requirements is given in Figure 13.51. It is presumed that all the drives are provided with direct on-line switching.

13.10.2 Different types of starters and instruments wiring

Table 13.16 provides the list of symbols and abbreviations used.

Figure 13.52 – Simple DOL starter

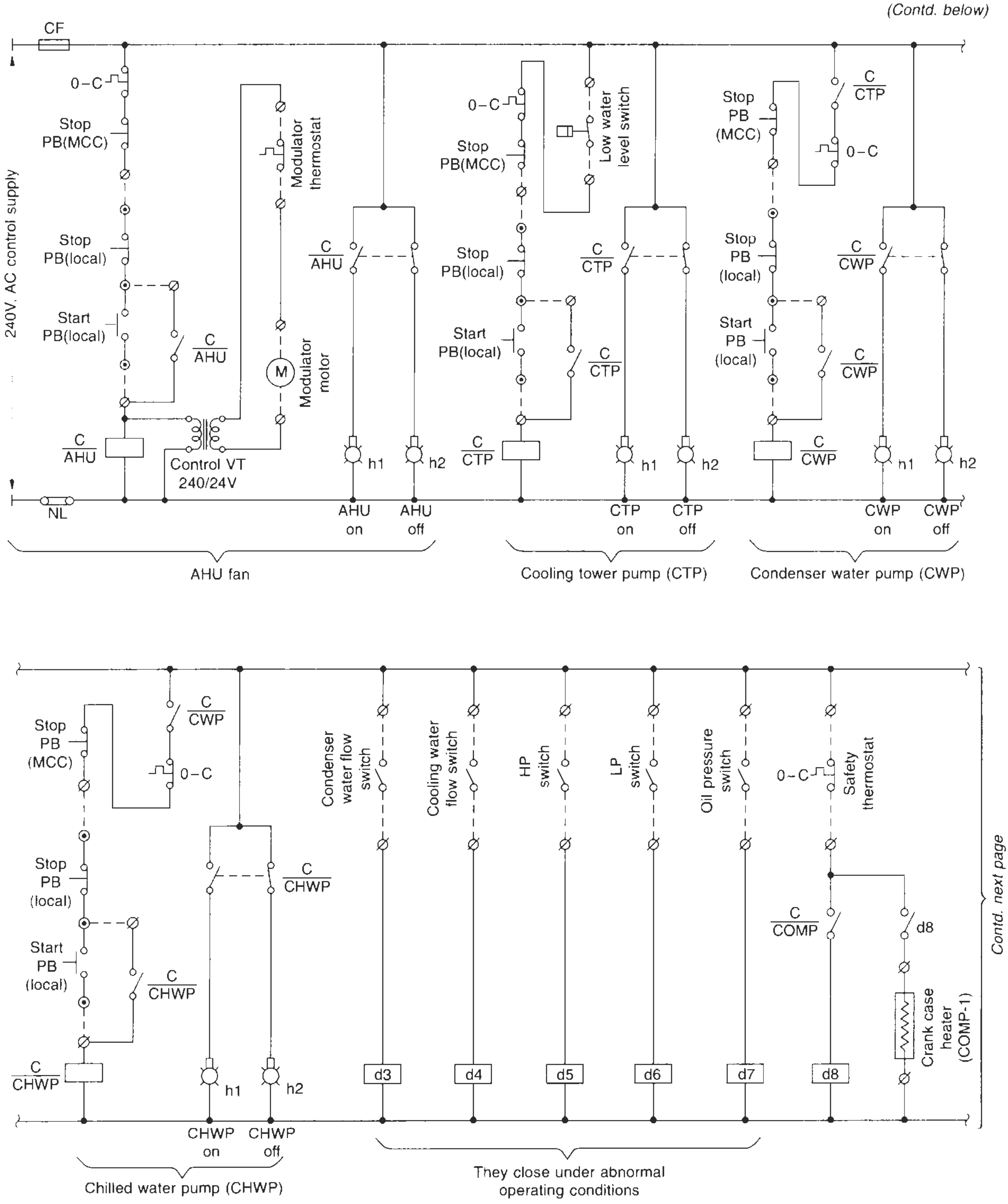

Figure 13.51 Control, protection and interlocking scheme for the air-conditioning plant of Figure 13.50

Figure 13.51 Contd.

(Contd. below)

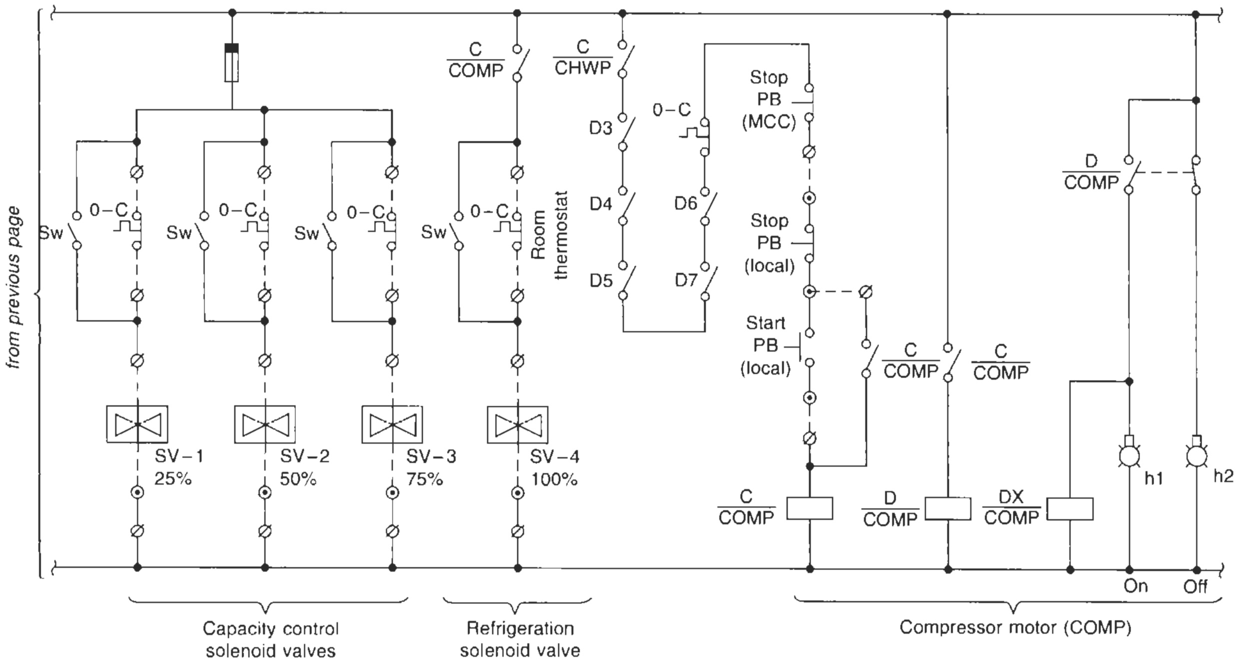

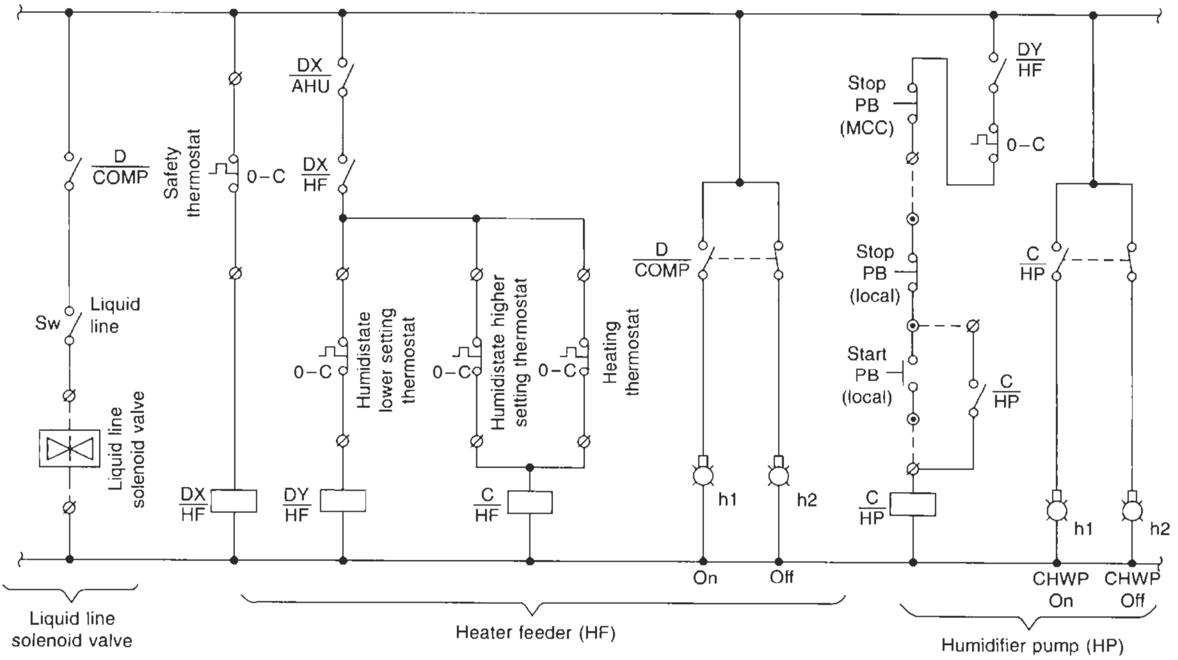

Figure 13.51 (Contd.)

Table 13.16 List of symbols and abbreviations used

Symbol	*Abbreviation*	*Description*
	RYBN	3ϕ and neutral power supply
	Sw	Heavy-duty switch
	F	Power fuse
	CF	Control fuse
	FSU	Fuse switch unit
		MCB/coupler/circuit breaker
		Isolator
	C	Power contactor (M – main, D – delta, S – star)
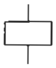	c d	Coil of main contactor Coil of auxiliary contactor
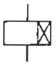	T	Coil of timer
		Normally open auxiliary contact
		Normally closed auxiliary contact
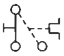	OCR	Overcurrent relay
	TDC	Time delay contacts
	TDO	
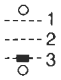	S/Sw	Selector switch (L/R – local/remote, A/M– auto/manual)
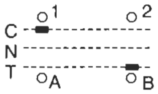		Breaker control switch (spring return to neutral) (C – closed, N – neutral, T – trip)
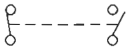	LS	Limit switch with spring charging mechanism
	DS	Door switch
	Start PB	Pushbutton (colour of knob, R – red, G – green, Y – yellow)
	Stop PB	
	TH	Thermostat
	D/O	Drawout terminal
		Terminal
	O/C	Thermal overcurrent relay
	h	Indicating light (colour of lenses, R–red, G–green, A–amber, W–white)
	A	Ammeter
	ASS	Ammeter selector switch
	V	Voltmeter
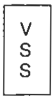	VSS	Voltmeter selector switch
	CT	Current transformer
		Voltage or control transformer
	Tr	Power Transformer
	R	Resistance
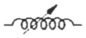	L	Reactance
	CS	Current shunt
	SH	Space heater
		Surge arrester
	M	Motor
	G	Generator
		Cable
	G	Grounding

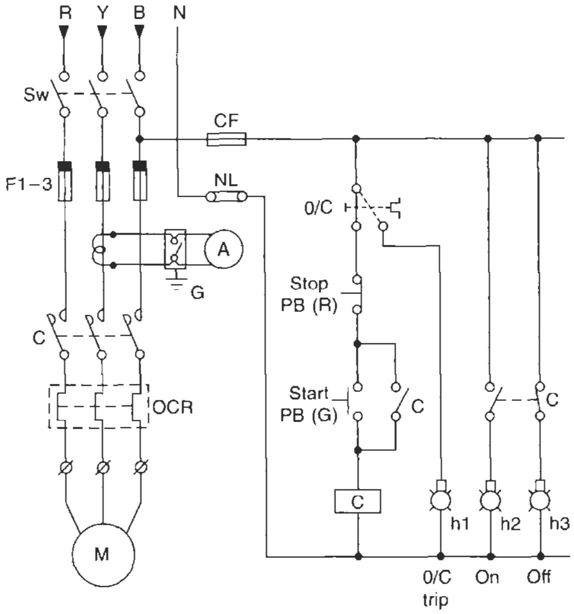

Figure 13.52 Simple DOL starter

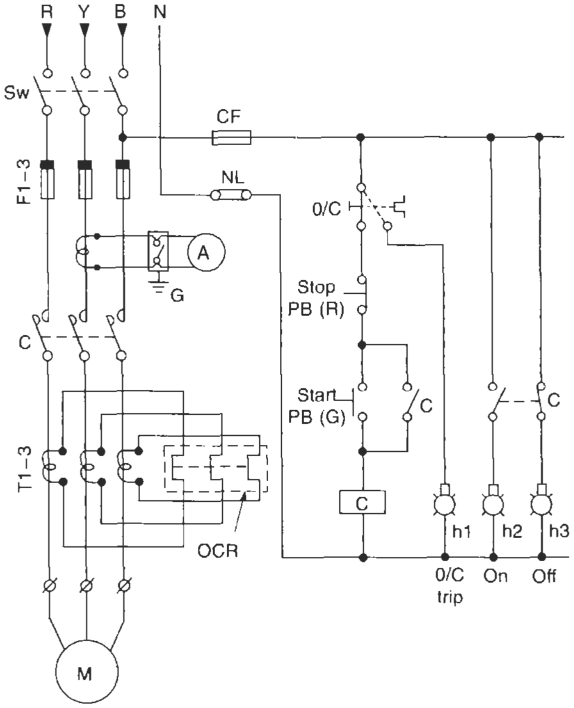

Figure 13.54 DOL starter with CT-operated over-current relay
(i) For a high-rating motor or
(ii) For a heavy-duty motor (irrespective of rating)

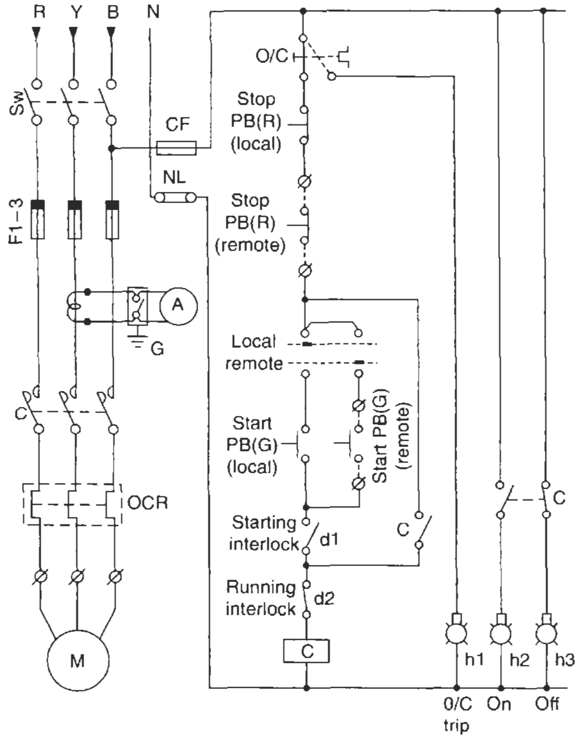

Figure 13.53 DOL starter with provision for remote control and starting and/or running interlocks

Figure 13.53 – DOL starter with provision for remote control and starting and/or running interlocks
Figure 13.54 – DOL starter with CT-operated overcurrent relay
(i) For a high-rating motor or
(ii) For a heavy-duty motor (irrespective of rating)
Figure 13.55 – Reversing DOL starter
Figure 13.56 – Star-delta starter
Figure 13.57 – Auto transformer starter
Figure 13.58 – Primary resistance starter
Figure 13.59 – Dual-speed starter
Figure 13.60 – Three stage stator-rotor starter
Figure 13.61 – Schematic for panel space heater and internal illumination
Figure 13.62 – Schematic for instrument wiring

Note
All control schemes shown with auxiliary contactors and timers can be easily replaced with PLCs and microprocessor-based controls. Refer to Section 13.2.3 for more details.

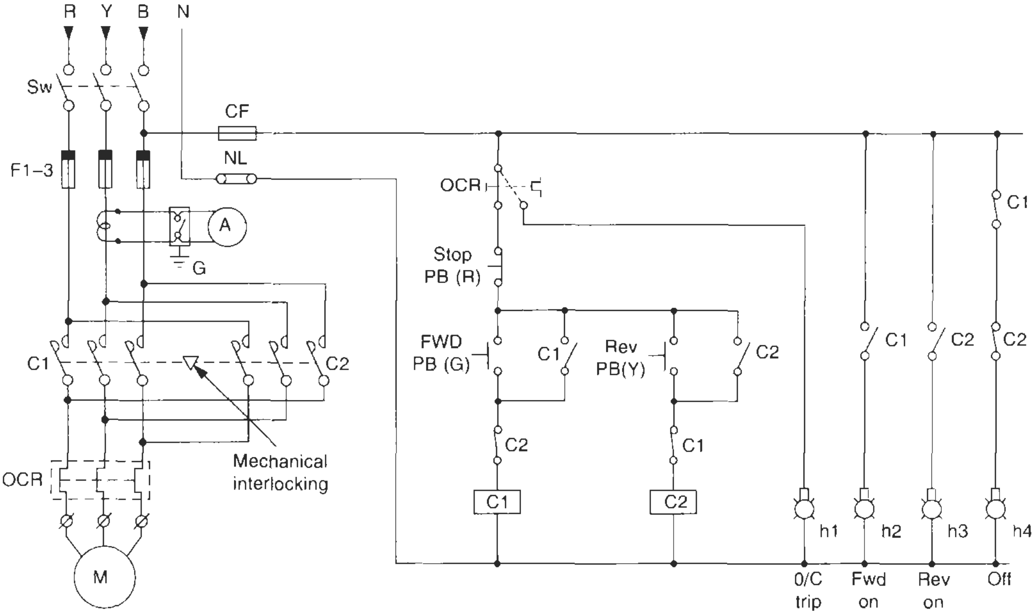

Figure 13.55 Reversing DOL starter

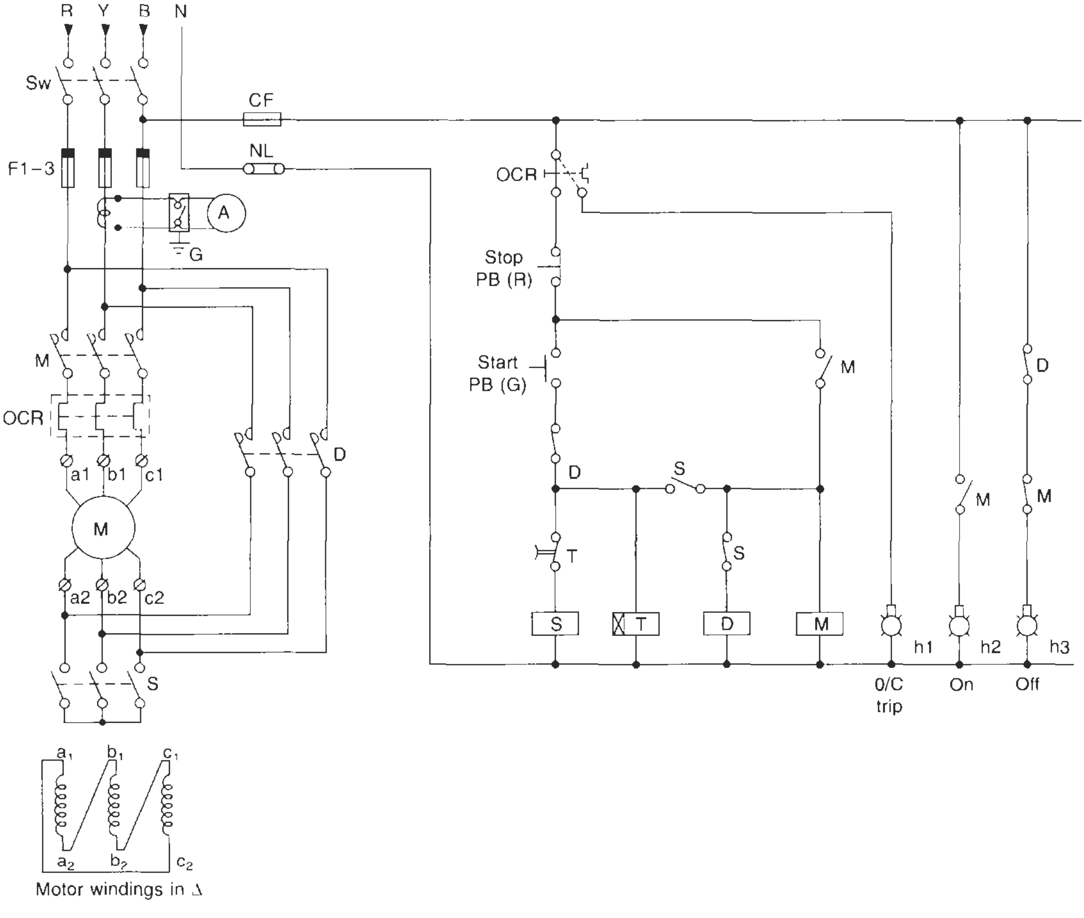

Figure 13.56 Star-delta starter

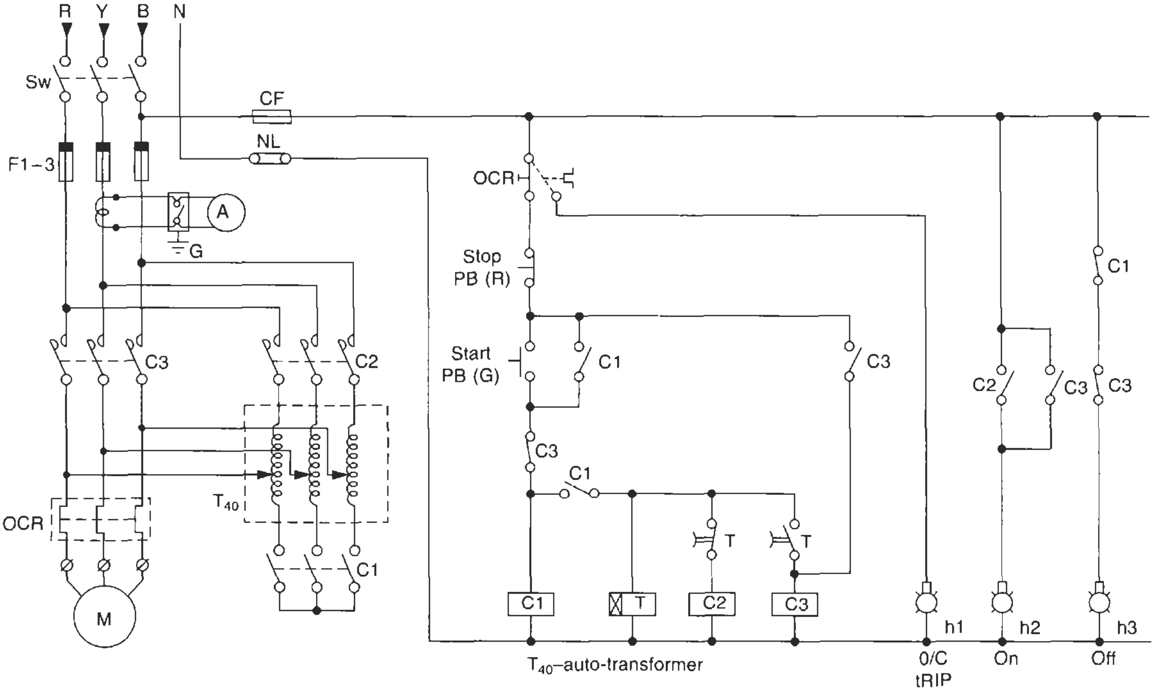

Figure 13.57 Auto-transformer starter

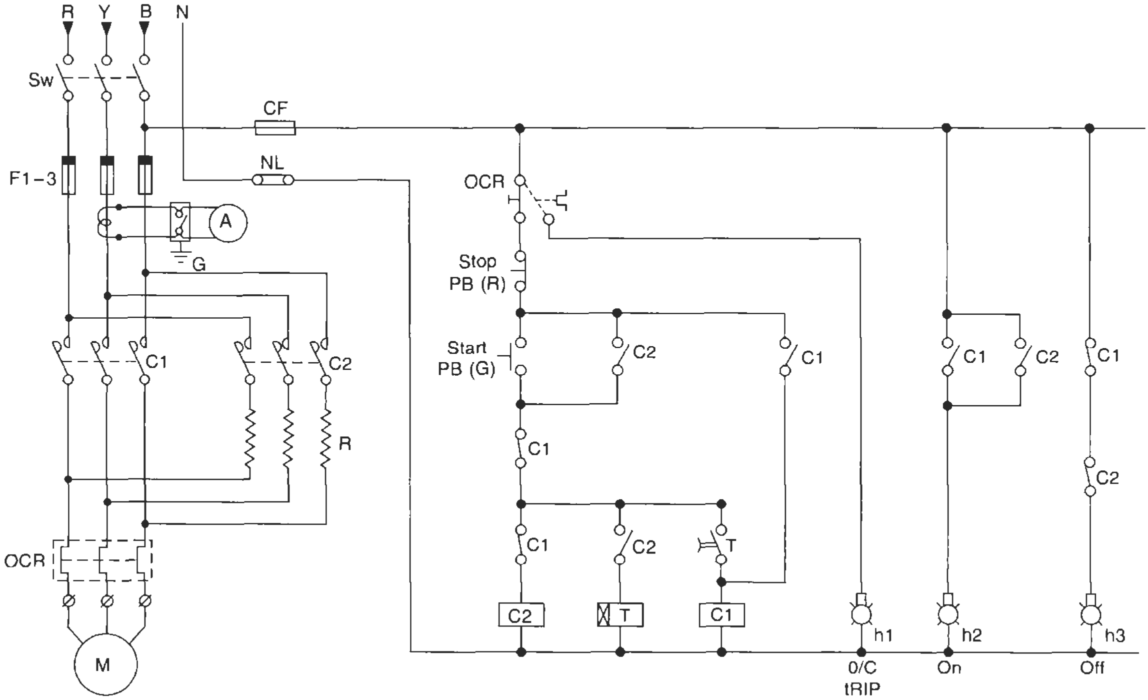

Figure 13.58 Primary resistance starter

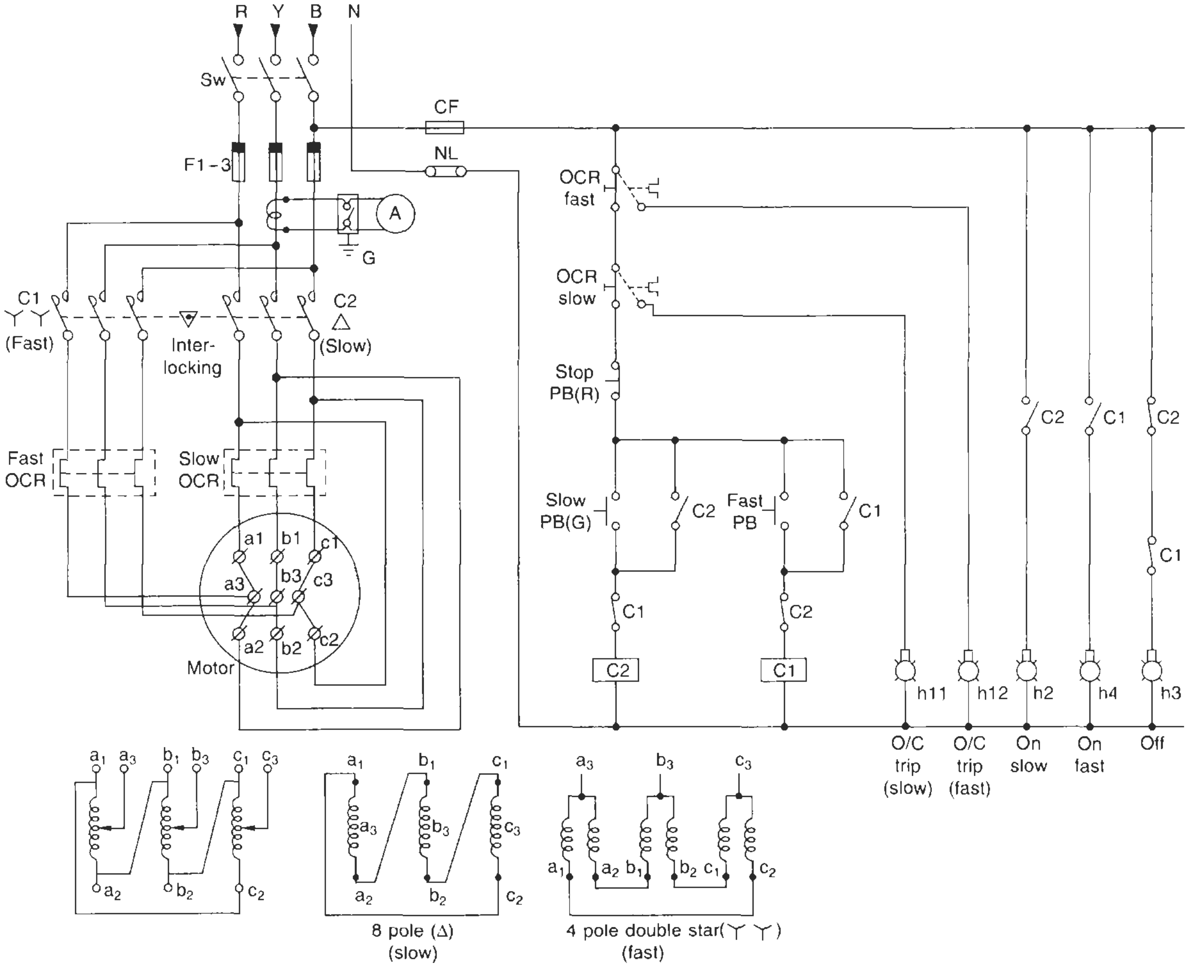

8 pole (Δ)
(slow)

4 pole double star(YY)
(fast)

Figure 13.59 Dual-speed starter

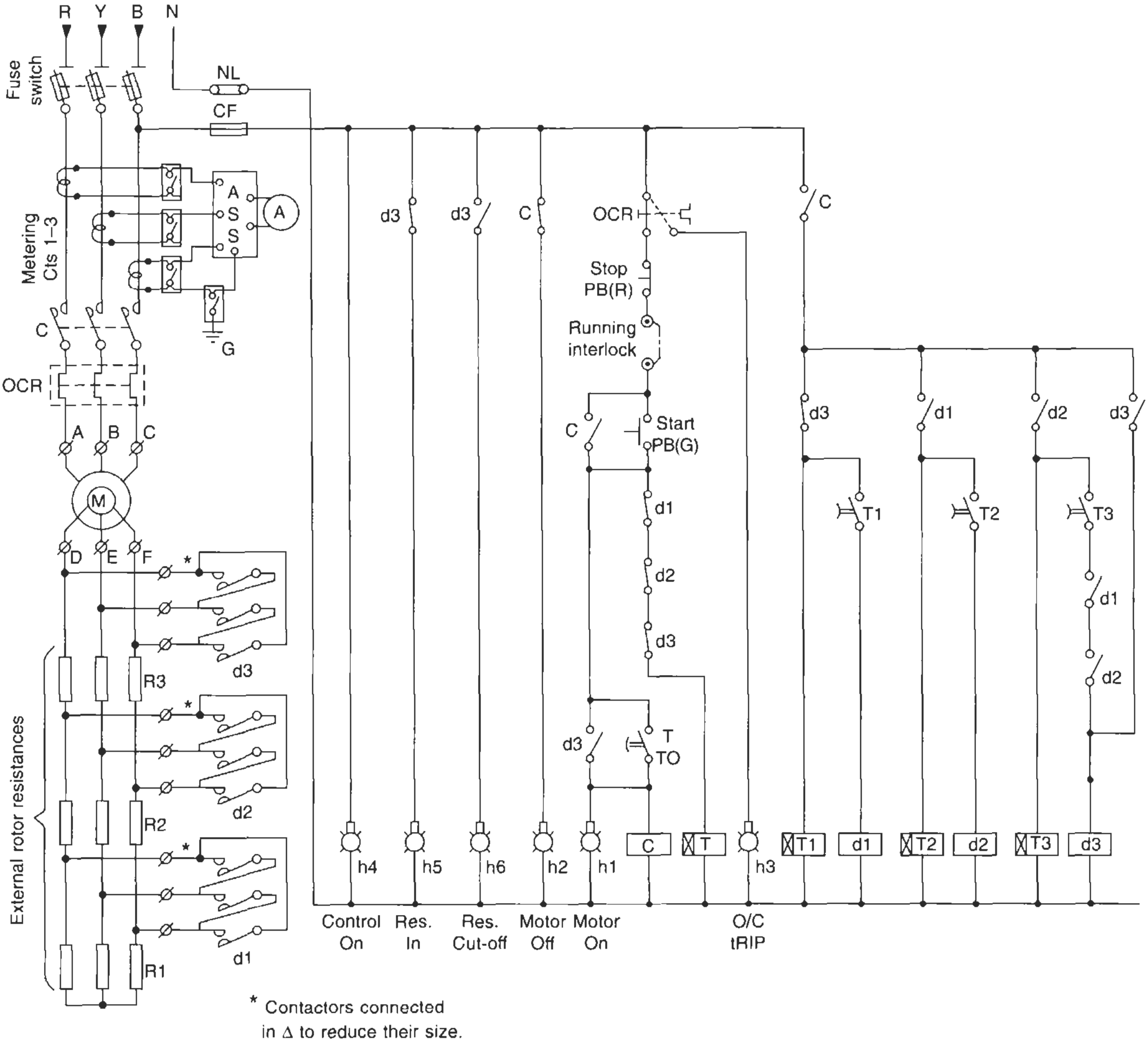

Figure 13.60 Typical three-stage stator-rotor starter

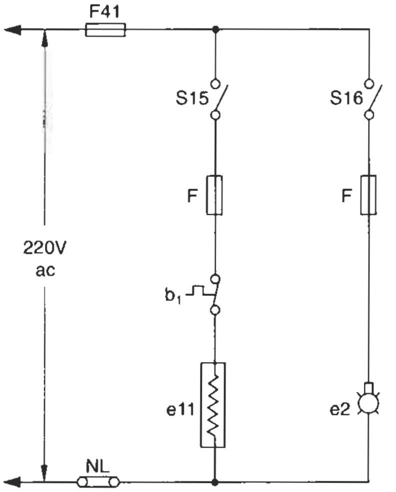

b1 — Thermostat cut off contact
S15 — Space heater switch
S16 — Panel door switch
e11 — Space heater
e2 — Interior illumination

Figure 13.61 Schematic for panel space heater and internal illumination

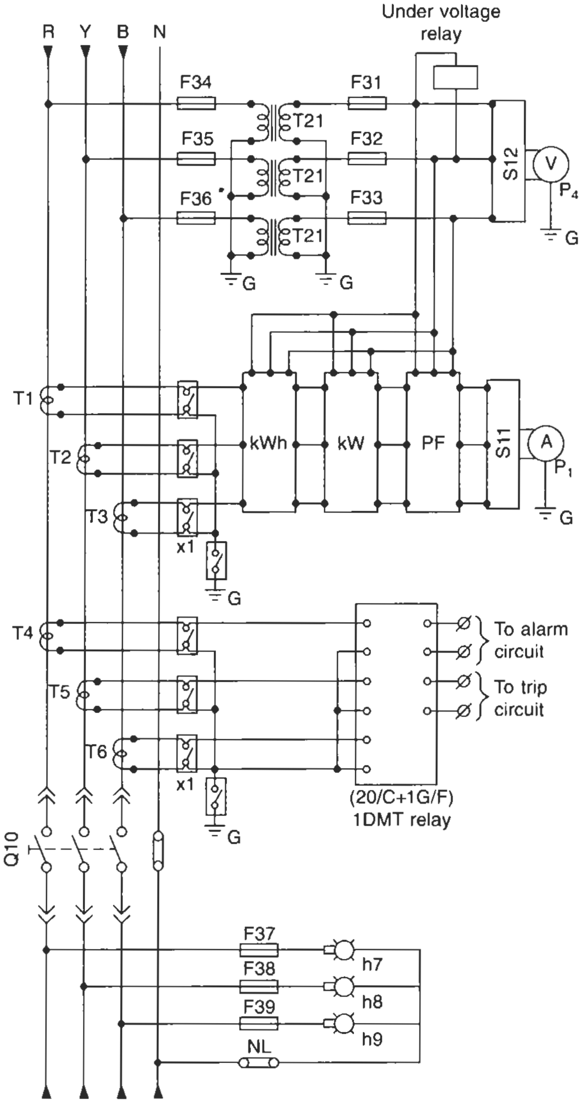

Figure 13.62 Schematic for instruments' wiring

Relevant Standards

IEC	*Title*	*IS*	*BS*	*ISO*
60034-1/1996	Rotating electrical machines	4722/1992/	BSEN 60034-/1995	–
60038/1994	IEC standard voltages, rating and performance	325/1996		
60051-1/1997	Direct acting indicating analogue electrical measuring instruments and their accessories Definitions and general requirements	1248-1 to 9	BS 89-1/1990	–
60059/1999	Standard current ratings (based on Renald Series R-10 of ISO 3)	–		3/1973
60071-1/1993	Insulation coordination. Definitions, principles and rules	2165-1/1991	BSEN 60071-/1996	–
60071-2/1996	Insulation coordination Application guide	2165-2/1991	BSEN 60071-/1997	–
60076-1/1993	Power transformers – general	2026-1/1991	BSEN 60076-/1997	–
60079-1/1990	Construction and verification test of flameproof enclosures of electrical apparatus	2148/1993	BS 4683-2/1993 5501-5/1997	–
60079-14/1996	Electrical installations in hazardous areas (other than mines)	5571/1991	BSEN 60079-14/1997	
60112/1979	Method of test for determining the comparative and the proof tracking indices of solid insulating materials under moist conditions	–	BS 5901/1980	–
60044-1/1996	Current transformers, specification and application	2705-1 to 4/1992	BS 7626/1993	–
60186/1987	Voltage transformers, specification and application	3156-1 to 4/1992	BS 7729/1994 BS 7625/1993	–
60255	Electrical relays	3231-1 to 3, 3842-1 to 12	BS EN 60255	–
60258/1968	Direct acting recording electrical measuring instrument and their accessories	–	BS 90/1993	–
60265-1/1998	Switches and switch isolators for voltages above 1000V General and definitions	9920-1 to 4/1992	BSEN 60265 1/1998	–
60265-2/1988	Specification for high voltage switches. High voltage switches for rated voltages of 52 kV and above		BSEN 60265-/1994	–
60282-1/1998	High voltage fuses. Current limiting fuses exceeding 1 kV	9385-1 to 5	BSEN 60282/1996	–
60298/1994	A.C. metal enclosed switchgear and controlgear for rated voltages above 1kV and up to and including 52 kV	3427/1991	BSEN 60298-1/1996	–
60439-1/1996	Specification for LV switchgear and controlgear assemblies. Specification for type-tested and partially type-tested assemblies	8623-1/1993	BSEN 60439-1/1994	–
60439-2/1991	Particular requirements for busbar trunking systems	8623-2/1993	BSEN 60439-2/1993	–
60439-3/1993	Particular requirements for low-voltage switchgear and controlgear assemblies intended to be installed in places where unskilled persons have access to their use. Distribution boards	8623-3/1993	BSEN 60439-3/1991	–
60439-4/1995	Low voltage switchgear and controlgear assemblies. Particular requirements for assemblies for construction sites	–	BSEN 60439-4/1991	–
60445/1988	Identification for equipment terminals and of terminations of certain designated conductors, including general rules for an alphanumeric system	11353/1991	BS 5559/1991	–
60517/1990	Gas insulated metal-enclosed switchgear for rated voltages of 72.5 kV and above	–	BSEN 60517/1997	–
60529/1989	Degree of protection provided by enclosure (I.P. code)	2147/1962	BSEN 60529/1992	–
60617-2/1996	Graphical symbols for diagrams – Symbol elements, qualifying symbols and other symbols having general application	12032	BSEN 60617-2/1996	–
60694/1996	Common specifications for high voltage switchgear and controlgear standards	3427/1991	BSEN 60694/1997	–
60947-1/1999	Low voltage switchgear and controlgear. General rules and test requirements	13947-1/1993	BSEN 60947-1/1998	–
60947-3/1998	Low voltage switchgear and controlgear. Switches, disconnectors, switch-disconnectors and fuse-combination units	13947-3/1993	BSEN 60947-3/1992	–
60947-4-1/1996	Low voltage switchgear and controlgear. Contactors for voltages not exceeding 1000 V a.c. or 1200 V d.c.	13947-4-1/1993	BSEN 60947 – 4-1/1992	–
60909/1988	Guide for short-circuit calculations in a 3-ϕ system	13234	BS 7639/1993	–
–	Code of practice for selection, installation and maintenance of switchgear and controlgear up to 1 kV. General	10118-1/1991	–	–

IEC	*Title*	*IS*	*BS*	*ISO*
–	Selection	10118-2/1991	–	–
–	Installation	10118-3/1991	–	–
–	Maintenance	10118-4/1991	BS 6423/1993	
–	Specification for control transformers for switchgear and controlgear for voltages not exceeding 1000V a.c.	12021-1987	–	–
–	Specification for high voltage busbars and busbar connections	8084/1992	BS 159/1992	–
–	Mechanical properties of fasteners.	1367-20/1996	BSEN 20898-7/1995	898-7/ 1992
	Torsional test and minimum torques for bolts and screws with nominal diameters 1 mm to 10 mm			
–	Specification for spring washers for general engineering and automobile purposes. Metric series	3063/1994	BS 4464/1990	–
–	Code of practice for design of high-voltage open-terminal stations	–	BS 7354/1990	–
–	Specification for electrical cable soldering sockets	6554/1991	BS 91/1988	–
–	Code of practice for maintenance of electrical switchgear and controlgear for voltages above 1 kV and up to 36 kV	–	BS 6626/1993	–
–	Code of practice for maintenance of electrical switchgear for voltages above 36 kV	–	BS 6867/1993	–
–	Specification for voltage regulation and parallel operation of a.c. synchronous generators	–	BS 4999-140/1987	–
–	Methods of testing plastics	–	BS 2782	–

Relevant US Standards ANSI/NEMA and IEEE

ANSI/IEEE-C37.20.1/1993	Metal enclosed low voltage power circuit breaker switchgear
ANSI/IEEE-C37.20.2/1994	Metal clad and station type cubicle switchgear
ANSI/IEEE-C37.20.3/1993	Metal enclosed interrupter switchgear
ANSI/IEEE-C-37.23/1992	Guide for calculating losses in isolated phase bus
ANSI C.37.47/1992	Specifications for distribution fuse disconnecting switches, fuse supports and current limiting fuses
NEMA L11/1983	Industrial laminated thermo setting products
ANSI/IEEE 241/1991	Recommended practice for electric power systems in commercial buildings (IEEE Grey Book)
ANSI/IEEE 242/1991	Recommended practice for protection and coordination of industrial and commercial power systems (IEEE Buff Book)
ANSI/IEEE 141/1993	Recommended practice for electric power distribution for industrial plants (IEEE Red Book)
ANSI/IEEE 1312/1993	Voltage ratings for a.c. electrical systems and equipment above 230 kV
ANSI/IEEE 1313.1/1996	Insulation coordination, definitions, principles and rules
ANSI/IEEE C37.16/1997	Preferred ratings, related requirements and application recommendations for LV power circuit breakers and a.c. power circuit protectors
NEMA/ICS-2/1993	Industrial control and systems, controllers, contactors and overload relays, rated not more than 2000 V a.c. or 750 V d.c.
NEMA/ICS-2.3/1990	Instructions for the handling, installation, operation and maintenance of MCCs
NEMA/ICS-1/1993	Industrial controls and systems. General requirements
NEMA/ICS-3/1993	Industrial control and systems. Factory built assemblies
NEMA/ICS-6/1996	Industrial control and systems. Enclosures
ANSI/IEEE C37.21/1998	Standard for control switchboards
ANSI/C84.1/1995	Electric power systems and equipment – Voltage ratings (60 Hz)
NEMA WC-57/1990	Standard for control cables
NEMA SG-6	Power switching equipment
NEMA/PB 1/1990	Panel boards
NEMA/PB1.1/1991	General instructions for proper installation, operation and maintenance of panel boards, rated 600 V or less
NEMA/PB2/1995	Dead front distribution switchboards

Notes

1 In the tables of relevant Standards in this book while the latest editions of the standards are provided, it is possible that revised editions have become available. With the advances of technology and/or its application, the updating of standards is a continuous process by different standards organizations. It is therefore advisable that for more authentic references, readers should consult the relevant organizations for the latest version of a standard.

2 Some of the BS or IS standards mentioned against IEC may not be identical.

3 The year noted against each standard may also refer to the year of its last amendment and not necessarily the year of publication.

Appendix: Painting procedure of switchgear and controlgear assemblies and treatment of effluent

A13.1 Introduction

Painting of all metallic surfaces of a switchgear or a controlgear assembly is an essential requirement to provide it with an aesthetic appearance, on the one hand, and to prevent it from rust and corrosion, on the other. Painting serves these purposes by providing the machine with a hard and longer-lasting metallic surface. We describe briefly, the basic procedure to paint and test painted surfaces. In the discussion, we have laid more emphasis on MS sheet-metal surfaces as these are more typical.

The painting procedure for other metal surfaces, although similar, the process of pre-treatment for cast iron components or non-ferrous metals, such as aluminium and copper, may need more care. The process of pre-treatment in such cases may vary slightly than for MS, as noted below. Such surfaces may require a change in the type of chemicals, their concentration and duration of treatment. The final surface preparation and painting procedure, however, will remain the same for all.

The total painting procedure, may be divided into the following operations:

1 Sheet pre-treatment (phosphate coating)
2 Preparing the surface
3 Applying the final paint
4 Curing the paint
5 Testing the painted surfaces
6 Providing a peelable coating compound, if necessary and
7 Effluent treatment and discharge of waste water.

A13.2 Sheet pre-treatment (phosphate coating)

In Table A13.1 we describe the most common practices being adopted to pre-treat and phosphate ferrous and non-ferrous surfaces, before applying paint:

Degreasing and cleaning

Degreasing is a process to remove oil, grease, dirt and swarf (file dust) etc. from a surface.

Types of cleaners (degreasing agents)
There are several types of cleaners available for this purpose, for example:

1 **Alkaline cleaners (caustic based)** These are caustic soda based and are suitable for ferrous metals only. They are more effective in removing greases of vegetable oils, rather than mineral (petroleum) oils, as they do not saponify the mineral oils.
2 **Neutral cleaners (non-caustic based)** These are ethylene oxide condensates, and easily emulsify the mineral oils and greases. They are more useful for sheet-metal components, which contain no lead compound lubricants (as used for deep-drawing operations), and are also suitable for non-ferrous

Table A13.1 Process of sheet pre-treatment (phosphate coating)

Pre-treatment process	*For ferrous metals*			*For non-ferrous metals*
	Heavily scaled and heavily rusted surfaces (hot-rolled sheets)	*Heavily scaled, but mildly rusted-surfaces (hot-rolled sheets)*	*Mildly scaled and mildly rusted surfaces (cold-rolled sheets)*	
1 Degreasing and cleaning	✓	✓	✓	✓
1 Water rinsing	✓	✓	✓	✓
3 Descaling or acid pickling	✓	✓	–	–
4 Water rinsing	✓	✓	–	–
5 De-rusting[a]	✓	–	✓[a]	–
6 Water rinsing	✓	Second water rinsing or neutralizing is recommended, in HCl pickling	✓[a]	–
7 Zinc phosphating[b]	✓	✓	✓	✓
8 Water rinsing	✓	✓	✓	✓
9. Passivation[b]	✓	✓	✓	✓
No. of tanks	Nine-tank method	Eight-tank method	Seven-tank method	Five-tank method

[a] Instead of de-rusting, a pickling process may also be sufficient, depending upon the surface condition of the sheets.

[b] After the pickling process, if the phosphating bath contains traces of sulphate (SO_2) or chloride (Cl) salts, the phosphated surface may become highly hygroscopic, and may absorb atmospheric moisture through even a very well painted surface, and show rusting with passage of time (depending upon the atmospheric conditions at the place of installation). To avoid this and to achieve a long life for all painted surfaces, it is recommended that all these salts are first neutralized. This is possible with the use of de-mineralized (DM) water, at least for the make-up baths of phosphating and passivation. Where water is heavy and contains mineral salts, a small DM unit can be installed. It is an inexpensive procedure for the quality of phosphate coating that would be achieved. This will also enhance the working life of these bath solutions, and economize on their consumption. De-mineralization means removal of all sulphate (SO_2) and chloride (Cl) salts.

Note: The transfer of jobs from one tank to another may be done by an overhead travelling hoist to handle bulky and heavy objects.

metals. These cleaners emulsify faster than other types and are more suitable for heavy production lines.

3 **Emulsion cleaners** These are emulsified chlorinated solvents and are kerosene based, suitable for mineral oils (petroleum and heavy petroleum greases) and deep-drawn components, using lead compounds as lubricants. They are also suitable for non-ferrous metals.

4 **Solvent cleaners** These are tri-chloro ethylene (TCE) and are highly evaporating cleaners, possessing toxic properties. Their application is the same as for neutral cleaners.

Concentration, bath temperature and dipping time

These are indicated in Table A13.2.

Tank material

A mild-steel (MS) tank with wall thickness of 4–6 mm, with a heating arrangement and a thermostat temperature control, will be ideal for this purpose. Even when a cold process is adopted, heating will be imperative during winter or in cold climates, where the bath temperature would be less than 40°C. A protective lining inside the tank is generally not essential, as the chemical does not attack the metal. An anti-corrosive paint, such as epoxy or polyurethane may, however, be provided to enhance the life of the tank. The thermostat and heater may be of stainless steel or ordinary water heaters could be used. The tank may be made slanting ($\frac{1}{2}$inch in an 8-feet length is adequate) to have an overflow system to remove the oil and grease scum during the degreasing process.

Checking the bath concentration

The concentration of bath solution in caustic-based cleaners can be checked by a simple titration method as noted below, while for the remaining types of cleaners, a visual check of the degreased surfaces will be sufficient. The titration method is as follows:

- Pipette out 10 ml of bath solution and add 90 ml of distilled water (total 100 ml).
- Remove 10 ml of this solution and add a few (three to five) drops of phenol phthalein and shake.
- Titrate this against N/10-HCl solution until the colour changes to pink.
- A burette reading will indicate the actual pointage of the bath compared to the standard (approximately 3–6) for a concentration of 3–5%. Obtain the standard pointage from the chemical manufacturer.

Table A13.2 Concentration, bath temperature and dipping time

Type of cleaner	*Concentration*	*Bath temperature*	*Dipping time*
Alkaline cleaners	3–5% by weight or volume of bath	90–95°C	10–15 min
Neutral cleaners	3–5% by weight or volume of bath	(i) 50–70°C (ii) Also possible at room temp. (40–45°C)	3–5 min 10–15 min
Emulsion cleaners	No dilution	50–60°C	3–5 min
Solvent cleaners	No dilution	80°C	3–5 min

Note The exact values will depend upon the surface condition of the material and the field experience and skill of the operator. For more accurate details consult the chemical manufacturer.

For each one point of lower strength, add 1 litre of chemical per 100 litre of bath.

Note

N/10-ready-made laboratory chemicals are easily available.

Precautions to be observed

1 When making a fresh bath, stir the chemical well in a separate container, preferably in hot water, before mixing it into the tank.

2 Skim off oil and grease scum from the surface of the bath every day or more frequently, depending upon the amount of work being handled.

3 When using alkali base cleaners, protect the eyes and skin from direct contact with the chemical.

Water rinsing

To rinse, wash the surface in clear, continuous running water to remove all traces of degreasing agent from the surface. Two/three dips at room temperature are sufficient.

An MS tank with a wall thickness of 3–4 mm is adequate, otherwise the thickness can be similar to that for the degreasing tank but without the heating arrangement. It may also be coated with an anti-corrosive paint to enhance its life.

Carry out the rinsing before the chemical dries on the surface.

Descaling or acid pickling

This is a process to remove heavy black scale and rust from the surface. Hot-rolled sheets that may have such scale formation need only be acid pickled. Cold-rolled sheets, which may carry no such scales, need not be acid pickled. Depending upon the type of surface, one of the following methods may be adopted.

For heavily scaled and heavily rusted surfaces

1 **Acid pickling** This can be done under the following operating conditions, either with sulphuric acid (H_2SO_4), or hydrochloric acid (HCl). H_2SO_4 releases a lot of fumes and is ineffective under cold conditions. It forms iron sulphate, which forms a hard deposit at the bottom of the tank and is difficult to remove (see table on next page).

2 **Tank material** A mild-steel (MS) tank, with a wall thickness of 4–6 mm, and having an acid-proof lining of FRP (fibre-reinforced plastic), rubber or PVC will be suitable for this purpose. A heating arrangement, even if a cold process is adopted, will be ideal for

Parameters	H_2SO_4	*HCl*
Concentration (by weight)	25%	30–50%
Bath temperature	60 ± 5°C	40–45°C
Approximate time of pickling	15–20 min.	15–20 min.
Inhibitor: since the acid attacks the metal and causes pitting, an inhibitor must be added	0.25–0.5% by weight	0.25–0.5% by weight

Notes

1 Concentration of acid and time of pickling will depend upon the condition of the surface and the bath temperature.

2 One or two dips during the course of pickling will give better results and enhance the efficiency of the process, as it will quickly remove loose scales.

3 To reduce metal attack and fumes, use an acid inhibitor during acid pickling. A 0.01% concentration is recommended.

winters and cold climates. The heaters and thermostat must have a stainless steel body.

3 **Checking bath concentration** Acid content can be checked with the help of a pH paper. If this indicates more than 3.5, add more acid to make it less than this reading.

4 **Precautions**
- At lower concentration or lower bath temperature, the acid will attack slowly on scale and rust and will take longer to pickle. Therefore, monitor concentration and bath temperature.
- H_2SO_4 reacts with water and generates heat. When using this chemical, pour it slowly into the water.
- Acid fumes, being heavy, will vaporize over the tanks. They must be vented quickly to the atmosphere through an exhaust on the pickling tank otherwise the completed phosphate surfaces may be adversely affected. Apparently, the surfaces may not show rusting immediately, but may develop it while the equipment is in operation.

5 **Water rinsing** To rinse, wash the surface in clear, continuously running water to remove all traces of acid from the surface. Two or three dips at room temperature will be sufficient. The details of tank will be similar to those for the acid tank but without any heating arrangement.

6 **De-rusting** This is a process to remove rust from the surface. The procedure of de-rusting is given in Table A13.3, column 2. The de-rusting chemical is phosphoric acid based, and does not contaminate the phosphating tank.

7 **Tank material** A mild-steel (MS) tank with a wall thickness of 4–6 mm having a heating arrangement and a thermostat temperature control will be required. Since the phosphoric acid-based, rust solvent is corrosion resistant, no tank lining is necessary. The heaters and thermostat may be of stainless steel or lead-covered for better durability.

8 **Water rinsing** To rinse, wash the surface in clear water an MS tank with a thickness of 3–4 mm is adequate. It may, however, be provided with corrosion-resistant paint to extend its life.

Heavily scaled but mildly rusted surfaces

The process is similar to the above, except that de-rusting and water rinsing tanks can now be eliminated if H_2SO_4 is used for the pickling. But when HCl is used, the second water rinsing tank should be retained, to remove all traces of HCl thoroughly before it enters the phosphating tank. Otherwise the trapped traces of HCl (chloride contents) will contaminate the phosphating bath and adversely affect the phosphate coating. This may be shown by rusting, not immediately but in the course of time. It may be noted that traces of chloride are not removed so easily and hence the need for a second rinsing.

In place of simple water rinsing, it is more appropriate to add a neutralizing agent such as hexa-amine or sodium nitrite ($NaNO_2$) to make a bath of 3–4% concentration. In the bath, the job may be dipped for two or three minutes at room temperature to neutralize all the trapped traces of acid. This method also helps to accelerate the process of phosphating when the job is transferred to the phosphating tank. The concentration of bath solution can be checked along similar lines to those for the toner used in the phosphating tank.

The tank will be similar to the first rinsing tank. It is recommended that the rinsing be done at an elevated temperature of, say, 60–70°C, even when HCl pickling is carried out in cold conditions to agitate the air and easily remove all traces of chloride.

The bath water may be checked for any acid traces with the help of a pH paper. This should give a reading above 6, preferably around 7.

Note

When de-rusting is adopted after HCl pickling, the second water rinsing, as recommended above, is not essential as the traces of chloride, if any, will be neutralized in the de-rusting tank, which is a phosphoric acid-based rust solvent.

Mildly scaled and mildly rusted surfaces

Now the process of acid pickling may be eliminated if desired. Instead, only the de-rusting process can be used, as indicated in column 2 of Table A13.3. Alternatively acid pickling may be carried out as before, but at a lower concentration and temperature, as noted in column 1. Since one cannot always be certain of the quality of sheet surfaces it is advisable to follow the process of acid pickling.

Sand blasting

The scale can also be removed by shot blasting using abrasive grits such as dry sand, less than 1 mm ϕ. This method is more suited for components not suited to the dip method and cast iron components, in which the acid may become trapped in the porous surfaces. For sheet-metal components and complicated shapes and crevices, the dip method alone is recommended.

Phosphating

Process

This is a process to provide a fine coat of zinc phosphate or zinc calcium phosphate on ferrous and non-ferrous

Table A13.3 Pickling and de-rusting process in mildly scaled and mildly rusted surfaces

Description	*Pickling-cum-de-rusting tank (Hot-rolled or cold-rolled sheets with mild scaling and rust)* 1		*De-rusting tank (phosphoric acid-based rust solvent)* 2	
			Heating type solvent	*Cold type solvent*
	H_2SO_4	HCl	*Hot-rolled sheets with mild scaling*	*Cold-rolled sheets*
Concentration	10–15%	25–30%	15–20%	15–20%
Temperature	60 ± 5°C	40–45°C	60–70°C (M. 80°C)	40–45°C
Approx. time of pickling and de-rusting	5–10 min.	10–15 Min.	10–15 min.	3–5 min.
Inhibitor	0.25–0.5% by weight	0.25–0.5% by weight	Not required	
Checking the concentration	By pH paper: should not be more than 3.5		[a]See footnote	
Water rinsing	Only one water rinsing, with a few extra dips, is adequate		As noted in steps 1–8	

[a] The phosphoric acid-based solvent used for de-rusting can be checked as for degreasing but titration will now be carried out against an N/10 NaOH solution until the colour changes to green. A burette reading will indicate the actual pointage of the bath compared to the standard (almost 4 for a concentration of 5% and 16 for a concentration of 20%). Obtain the standard pointage from the chemical manufacturer. For each one point lower strength, add 1.2 ℓ of solvent per 100 ℓ of bath.

surfaces. It is a highly corrosion-resistant bonding to protect the surfaces from corrosion and rust. The rust may creep under the painted or scratched surfaces and crevices. This is a phosphate base chemical and can be applied cold or hot. However, the cold process is not recommended, as it may give a coat of about 3–5 g/m^2 whereas for the equipment being discussed the coat must be above 5 g/m^2.

Concentration:

- Hot process – 3–5% by volume of bath
- Cold process – 10–15% by volume of bath

Toner, accelerator or oxidizing agent

This is alkaline in nature, say, of sodium nitrite ($NaNO_2$) base and may be added to accelerate the process. At a very high temperature, however, above 70°C, it becomes ineffective. The bath temperature must therefore be kept below this.

Concentration:

250–300g/1000 l of bath volume.

Where the phosphate coating is required to be more than 5 g/m^2 an extra hot process is used, as noted later, when the use of toner (accelerator) becomes redundant, as it is ineffective above 70°C.

Bath temperature and approximate time of dipping

1 For the accelerated process:
  For a normal coating:
  - Hot process: 60–70°C for 2–5 minutes will provide a phosphate coating of up to 5 g/m^2.
  - Cold process: 40–45°C for 20–25 minutes will provide a phosphate coating of up to 3–3.5 g/m^2.

2 For the unaccelerated process:
  For a heavy coating:
  Hot process: 80–90°C for 5–7 minutes will provide a phosphate coating of more than 5 g/m^2.

Material

An MS tank with a wall thickness of 3–4 mm, having a heating arrangement and a thermostat temperature control will be required. No protective lining is necessary as the phosphate coating itself is protective.

Checking the concentration of the bath

Carry this out as for tank no. 1 (see above):

- Pipette out 10 ml of bath solution.
- Add a few drops of methyl orange indicator and shake.
- Titrate it against an N/10 NaOH solution until the colour changes to yellow.
- Note the addition of NaOH, which will indicate free acidity.
- To the same solution add a few drops of phenol phthalein, and titrate it against N/10 NaOH until a pink colour appears, which will indicate the total acidity of the bath. This is approximately 35 to 37 for a concentration of 5% for a hot process and 60 to 64 for a concentration of 10% for a cold process. Obtain the standard total acidity of the hot or cold process chemicals from the manufacturer.
- For each one-point lower strength, add 125 to 150 ml chemical per 100 ℓ of bath. Consult the manufacturer for the exact details.

Checking the toner

- By starch iodide paper (original colour white)
- Dip a piece of this paper into the bath solution for a few seconds.
- The change of colour of the paper will indicate the condition of the toner, i.e.
  White – no toner
  Pale mauve (light blue) – insufficient toner
  Blue or dark blue – correct quantity of toner
  Black – excess toner.

Precautions

1 The phosphated surface must be transferred to the water rinsing tank without delay.
2 To protect the surface from contamination by foreign matter, it should not be touched, wetted or subject to condensation.
3 The sludge of the phosphate bath that settles at the bottom, must be cleaned as frequently as possible. The clear solution from the surface can be siphoned into an empty rinsing tank. After cleaning the tank, the clear solution can be poured back into the tank.
4 The phosphate solution is acidic. Continuous human contact or splashing of bath solution must be avoided, and hands or skin washed clean with a dilute solution of 1–2% of ammonium bicarbonate.

Water rinsing

To rinse, wash the surface in clear, continuous running water to remove all traces of soluble salts which may cause blistering on the surface. The tank can be similar to the phosphating tank. It may, however, be coated with an anti-corrosive paint to extend its life.

Passivation

This is the final neutralizing rinse after the pre-treatment to obtain a better corrosion resistance. The phosphated surfaces are treated with chromic acid-based or acidified sodium dichromate solutions which are not affected by moisture and thus protect the phosphate coating.

Concentration

- Hot process – 125–150 g/1000 l of bath volume
- Cold process – 250–500 g/1000 l of bath volume

A very high content of this acidic solution may dissolve the phosphate coating.

Bath temperature and approximate dipping time

- Hot process – 60–70°C for 30–45 seconds
- The hot process is generally not recommended as it may dissolve the phosphate coating
- Cold process – 40–45°C for 60 seconds or so.

Tank for passivation

This is similar to that for phosphating. It may, however, be coated with an anti-corrosive paint to extend its life.

Checking the bath concentration

This can be done by checking the pH value of the bath solution.

- Use a universal pH paper. The pH value should be between 2 and 3.
- If the value exceeds 3, add more chemical.
- If it is less than 2, drain a part of the bath and replenish it with fresh water.

Drying

It is essential to dry passivated surfaces promptly to protect them from moisture and atmospheric contamination. The drying may be carried out by blowing compressed air, which is easier and more economical, or by placing in the same oven as for the paint. Special care need be taken with hidden surfaces, such as in corners, bends and crevices, to ensure that there is no trapped moisture.

Sealing

The phosphate coating itself is not protective unless sealed with a protective coating of primer. Sealing is therefore carried out by applying a coat of primer within 12 hours of phosphating, if the atmosphere is dry, or immediately if it is humid. Otherwise the atmospheric humidity may react with the surface and form a film of rust (i.e. ferric oxide (Fe_2O_3)).

Notes

1 The chemical concentrations, bath temperature and process times noted above are only indicative and for general reference. They may vary with the type of chemicals, the manufacturer and the condition of the surface to be treated. Details may be obtained from the chemical manufacturer to formulate the internal sheet treatment process guidelines.
2 It is strongly recommended to check the concentration of all the baths every day before commencing work. A passivation solution particularly, must be changed frequently, rather than adding more chemical to the same bath, depending upon the amount of work every day.

A13.3 Pre-treatment of non-ferrous components

1 Degreasing – with neutral or non-caustic based chemical, otherwise same as for ferrous metals.
2 Pickling and de-rusting – Not necessary, as there is no scale formation or rust on the non-ferrous surfaces.
3 The rest of the process is almost the same as for ferrous components.

A13.4 Size of tanks

These should be suitable to accommodate the size and volume of a switchgear or a controlgear assembly being manufactured by the unit. The size noted below should be adequate to meet most needs:

Length – 3 m
Width – 1 m
Depth – 1.2 m

The size, however, should be commensurate with the size of the assemblies and the scale of work.

Automation

The entire sheet pre-treatment process described above can also be made automatic as noted below:

- Set each thermostat at the required temperature whenever heaters are provided.
- Define the process time of each operation and set the hoist to dip, lift and carry the job to the next tank etc.

A13.5 Procedure for liquid painting

Making the surface

Within 12 hours of surface pre-treatment the surface must be sealed through a coat of primer as described in Table A13.4. After the primer coat, the surface must be air dried or stoved. The stoving method is always preferred, being faster and neater, compared to an air-drying process, which takes longer to set, and the painted surfaces may collect suspended dust particles from the atmosphere. After the primer is set, the surface may be applied, if required, with a very thin coat of putty to fill in any pin holes or other irregularities. The putty is also air dried or stoved and then rubbed gently with emery paper and washed with water to obtain a smooth plane surface, ready to be coated with the final paint. In fact, putty filling is not recommended because it is wasteful. It also adversely affects the strength of the paint film and increases porosity on the surface, and should be avoided as far as possible. It may not be necessary when cold-rolled sheets are used for fabrication.

A13.6 Applying the final coat of paint

After the surface has been prepared, the final coat of paint is applied. The brief procedure for painting is almost the same as for the primer and described in Table A13.4.

It is recommended to apply the primer or paint inside a spray booth, which would offer the following advantages:

- **Conventional method using a spray booth (wet method)** This traps the primer and the paint fumes, after routing them through a curtain of water, and then exhausts them into the atmosphere. This procedure, therefore, causes no environmental pollution. Within the plant area it also protects the operator and others from a health hazard. It also protects machinery installed nearby from paint fumes and also the plant from a fire hazard. The waste water, after treatment and neutralization, is discharged into the drains. To achieve this, the spray booth is provided with blowers on the top having its suction through a trough of water. (Refer to Figure A13.1, illustrating this arrangement.) It serves a dual purpose: first, it creates a draught of air within the booth to help eliminate all the paint fumes and second, it produces a curtain of water to dissolve all oversprayed paint. The dissolved paint can then be collected at the bottom in a trough and disposed of, and the trough-contaminated water can be drained out after neutralization and effluent treatment. Figure A13.1 illustrates a typical layout of a medium-sized paint shop.
- **Electrostatic method** This is also a wet method like the conventional process, except that the paint is now electrostatically charged, similar to the powder paint in a dry method as discussed later. The paint, being highly charged electrostatically, is wrapped around the object automatically.

Liquid paint

These paints are resin based and the paints required for sheet-metal surfaces are generally alkyd-based resins. For general industrial applications, any of the following types of enamel paints may be used,

- Air drying
- Air drying-cum-stoving
- Stoving

For special applications, however, such as for normally humid areas, and contaminated or chemically aggressive locations, epoxy paints are considered to be more appropriate. They provide a protective coating which is resistant to chemical fumes, corrosion and temperature. Chlorinated rubber paints, which also fall into the same category of protective paints, may also be used for these areas but, not being temperature resistant, are not preferred to epoxy paints.

Preparation of paint, its viscosity, solvent, thickness of one coat, air pressure, curing temperature and time of curing will remain the same as for the primer (Table A13.4).

Important notes on Table A13.4 and procedure for painting

1 Thickness of coat:
  - The recommended thickness of the total coat (primer plus paint) will depend upon the site conditions. For a normally clean environment, a coat of up to 50 microns is considered adequate. For a dusty or humid location requiring constant servicing and cleaning, a thicker coat, say, up to 70–80 microns, is considered to be adequate.
  - A thickness of up to 50 microns is possible through one coat of primer and paint. To obtain a greater thickness an additional coat of paint, rather than primer, may be applied after almost curing the first coat. A thickness of primer of more than 30 microns is not considered satisfactory as it may diminish its adhesive properties. To obtain a thickness of up to 100 microns, for instance, each coat (one of primer and two of paint) may be around 30–35 microns.
  - Whenever a second coat of paint is required for better adhesion of paint, it is better to rub the painted surface of the first coat with a finer emery paper

Table A13.4 Priming the treated surfaces

	Description	*Air drying* 1	*Air drying-cum-stoving* 2	*Stoving* 3
1	Purpose	(i) To provide protection to the treated surfaces by sealing (ii) To provide an adhesive surface for the final paint (iii) To smoothe the surface		
2	Types of primers	(i) For synthetic paints, zinc-chromate primers are recommended, which contain zinc chromate pigments and are highly corrosion resistant (ii) For epoxy paints, epoxy primers must be used		
3	Preparation	(i) Remove the skin from the surface of the primer, if any, and stir well the contents of the drum to make it a homogenous mixture (ii) Filter the mixture through a cambric cloth		
4	To adjust the viscosity by a Ford Cup Viscometer No. 4	21–25 seconds (as for synthetic and epoxy primers)	21–25 seconds	21–25 seconds
5	Solvent (thinner):			
	(i) For synthetic primers	General purpose	Stoving	Stoving
	(ii) For epoxy primers	Epoxy	Epoxy	Epoxy
6	Thickness of one coat:			
	(i) Synthetic primers	25–30 microns	25–30 microns	25–30 microns
	(ii) Epoxy primers	35–50 microns	35–50 microns	35–50 microns
		Note: To provide a coat up to these thicknesses, a one-coat two-pass will be sufficient. Each coat will generally mean one spray horizontally and one vertically, on both sides of the job		
7.	Air pressure	3–3.5 kg/cm^2 (40–50 lb/in^2). Air must be dry and free from oil and grease		
8	Curing temperature:			
	(i) For synthetic primers	Room temperature[a]	(i) Room temperature[a] or (ii) 100–120°C	120–130°C(Maximum 140°C)
	(ii) For epoxy primers			
	(a) Air drying	Room temperature[a]	(i) Room temperature[a] or	Not recommended[b]
	(b) Epoxy ester	–	(ii) 60–80°C	140–150°C
9	Curing time			
	(i) For synthetic primers	2 hours surface dry, 12–16 hours hard dry	(i) 12–16 hours at room temperature (ii) 20–30 minutes at 100–120°C	20–30 minutes
	(ii) For epoxy primers			
	(a) Air drying	2 hours surface dry, 12–16 hours hard dry	(i) 12–16 hours at room temperature (ii) 20–30 minutes at 60–80°C	–
	(b) Epoxy ester	–	–	30–40 minutes
10	Surface fillers (putty)[c]	Air drying	Air drying or stoving	Stoving
		←——— (synthetic or epoxy, as the case may be) ———→		
11	Final surface making	Rub the putty, if applied, with water and slightly coarse emery paper No. 180–220. It is better to rub the surface, even when no putty is applied to provide the surface with a knurling effect, to have a better adhesive surface for the paint.		

[a] Room temperature is considered to be around 40–45°C. In winter or for cold climates, where the room temperature may be less than this, suitable heating arrangements must be provided to obtain the desired results.

[b] Air-drying epoxy paints are not required to be stoved due to chemical reaction at about 120°C, which may affect its hardness. To speed up the curing, it may be stoved at a maximum temperature of, say, 60–80°C as noted in column 2.

[c] As discussed earlier, putty filling is generally not advisable unless the surface is poor, uneven or has pin holes. It is advisable to use primer surfacer, which provides a thicker coat and helps to fill such surfaces. The epoxy primer is thicker and may do this job in most cases.

(No. 300 to 400) and then to wash and dry it before applying the second coat.

- For protective coatings, such as with epoxy paints, the minimum thickness of paint (primer plus paint) should be around 70–80 microns, which is also possible through one coat each of primer and paint.

2 If different paint shades are required on outer and inner surfaces paint any one side first, cure it almost completely and then apply the second shade on the other side. Even when there is a wrapping on the second side, can be easily wiped and cleaned, without affecting the first.

3 The temperature and time of curing, as indicated in Table A13.4, are indicative and for general guidance only. They may vary with the type and quality of paint and effectiveness of the furnace. For exact details, consult the paint manufacturer. The operator may also vary the given parameters slightly, based on his own experience and the end results.

4 Curing time will also depend upon the thickness of coat and the shape of the workpiece.

5 Air-drying paints are easily available as noted above but they may not suit a regular production line as:

- They would require a longer drying time (slow

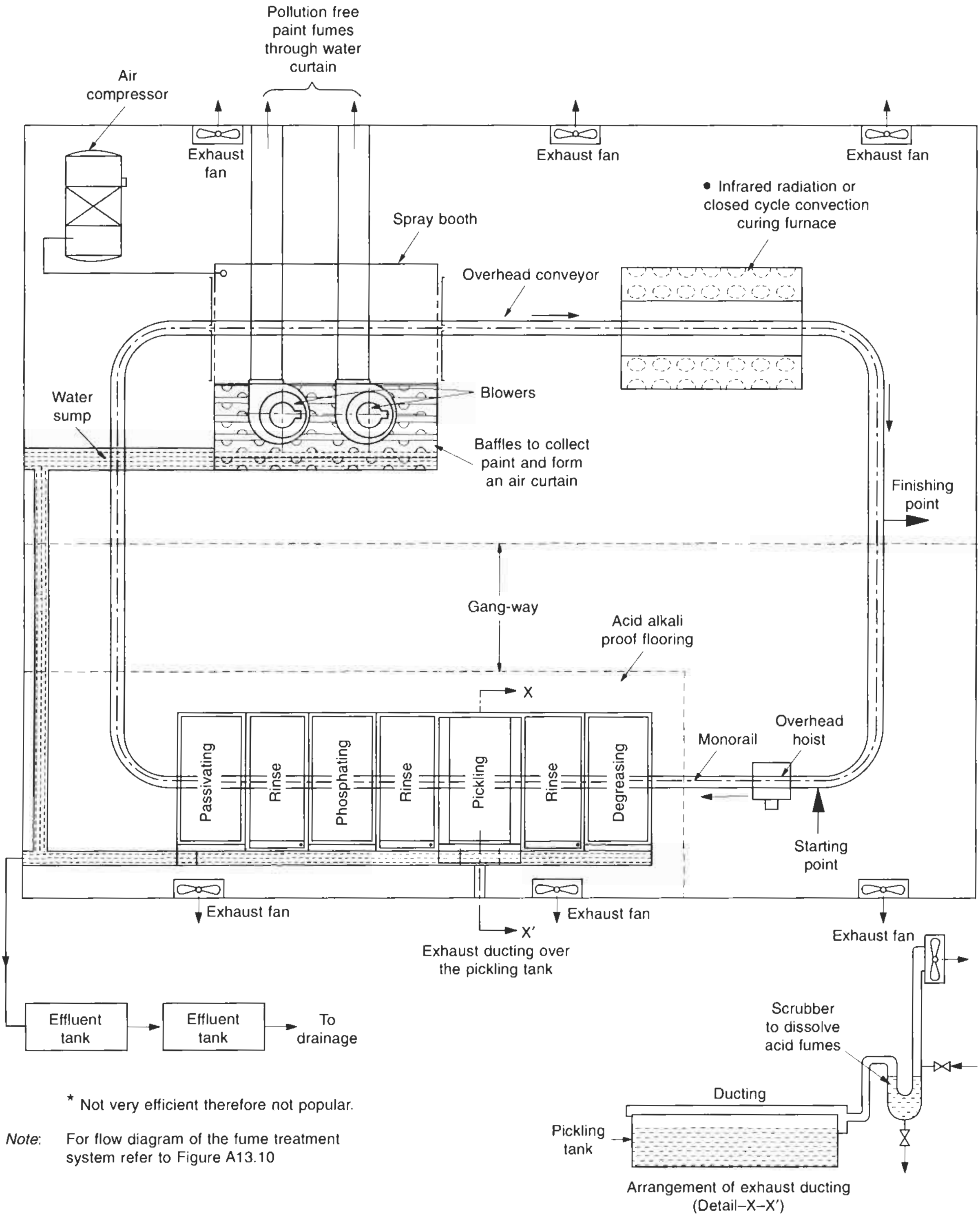

* Not very efficient therefore not popular.

Note: For flow diagram of the fume treatment system refer to Figure A13.10

Figure A13.1 A liquid painting system illustrating typical layout of a medium-size paint shop showing a seven-tank pre-treatment process

process), which a regular production line can ill afford.

- They would require a larger storage area, which should be dustproof but well ventilated to provide for sufficient air circulation.
- During the drying time, the workpiece may collect dust from suspended dust particles in the atmosphere.
- The air dried surfaces may not be as neat and hard as the stoved surfaces.

6 Stove curing is a rapid method and is obtained by baking the paint for a specific time in a furnace at a specific temperature. The temperature and time will depend upon the type of paint being used and its thickness, the shape of the workpiece and the effectiveness of the furnace. (Refer to Table A13.4.) The oven may be electric or oil-fired convection type, with an arrangement to circulate the hot air around the workpiece. The heaters or the furnace may be installed at the bottom of the enclosure to cause the hot air to circulate by natural or forced convection. The heat consumed is high in such cases, as the whole furnace and its parts are heated first, and only then can it heat the workpiece. The heating-up time will thus depend upon the weight and size of the job and also the size and effectiveness of the furnace, but the job is not influenced by any external factors, such as air draught or atmospheric dust.

An infra-red (IR) bulb-type oven, where the heating is caused by radiation, was earlier considered a more effective and energy-saving method compared to the convection type due to direct heating of the paint. There was no heat loss to heat the body of the furnace or the workpiece itself. The paint is baked at the surface only, without thoroughly heating the workpiece. Such furnaces may not be airtight, as they are made flexible to adjust the workpiece at the most effective distance from the bulbs to obtain the most effective heat radiation. Being adjustable they can also accommodate any size of job but they may be influenced by external factors, such as draughts and suspended dust particles which may collect on the surface of the workpiece. To save on heat loss and protect the job from atmospheric dirt, the radiation-type oven may be closed from all sides, as much as is practical. When closed, it will also conserve heat and reduce baking time. However, the influence of surrounding conditions and the draughts are found to be great deterrents to taking full advantage of radiation efficiency. The latest trend, therefore, is to use a closed-chamber, convection-type furnace (Figure A13.2). The use of glass-wool and thermocoal as interior insulation now makes it possible to require only a moderate heat for the interior of the furnace and to prevent any heat loss through the furnace's body. The furnace is now totally dust-free and such furnaces are thus highly energy efficient for curing paint.

A13.7 Testing of the painted surfaces

The following tests are generally recommended for testing the painted surfaces:

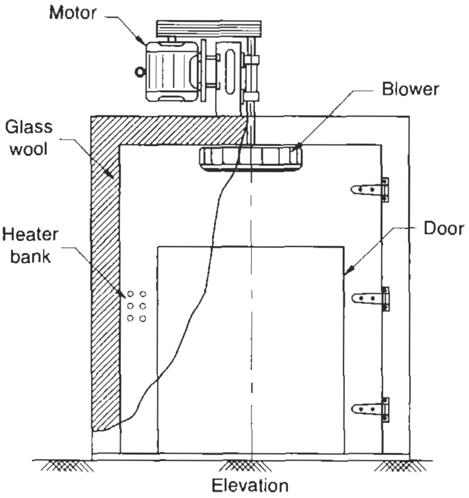

Figure A13.2 Closed-chamber convection-type furnace

1 **Flexibility and adhesion test** This is conducted to check the flexibility of the coat. It can be carried out on a conical mandrel or on a folding apparatus as illustrated in Figure A13.3 (ISO 3205 and 3270) by bending the test piece on it. The surface to be tested is kept on the outer side. The piece is bent through 180° (almost double folded) and examined for any cracks in the film. No cracks should develop.

2 **Stripping or hardness test** This is carried out to check the hardness of the painted surface and can be performed by a scratch hardness tester (ISO 3205 and 3270). A weighted tungsten-tipped needle is fixed at the far end of the test piece through a weight of 1 kg. The needle is then drawn at 30–40 m/s through its coated surface and the weight is increased up to 4 kg.

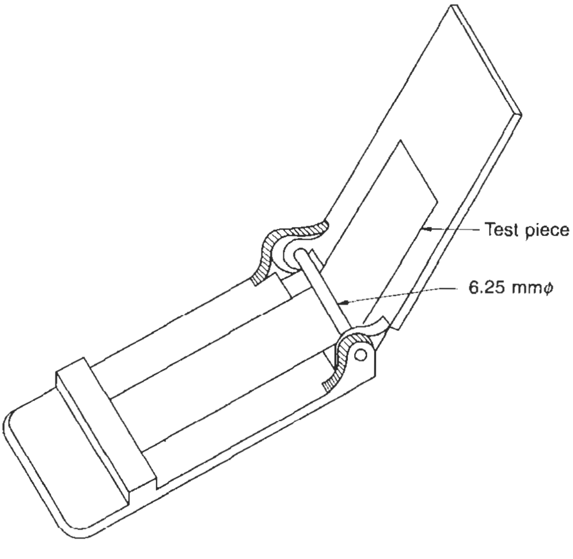

Figure A13.3 Apparatus for determining flexibility and adhesion

After the test, the scratch so marked should not show up the bare metal surface. Figure A13.4 illustrates the test arrangement.

A simpler method would be using scratching knives and making small squares in the surface (minimum 100) around 1 mm^2 for primer and 2 mm^2 for the final surface and applying adhesive cellophane tape 25.4 mm wide, with an adhesion strength of 40 ± 2.8 g/mm then pulling it off suddenly. Not more than 5% of the squares must peel off.

3 **Thickness of coat** This can be checked by a magnetic coating thickness tester gauge (Figure A13.5)
4 **Gloss** Gloss meters may be used to measure the specular gloss of the paint.
5 **Shade** This may be checked visually with the help of a standard shade card.
6 **Corrosion-resistance test** This can be done with the help of a salt spray test. The test piece is suspended in a salt spray chamber (Figure A13.6) for seven days in 100% relative humidity (IS 101 and IS 11864). After the test, the surface should have no signs of deterioration or corrosion.
7 **Acid resistance** This can be checked by using N/10 (H_2SO_4) solution. When a few drops are spilt on the test piece, or when the test piece is dipped for almost half an hour in the solution. It should develop no corrosion spots on the surface.

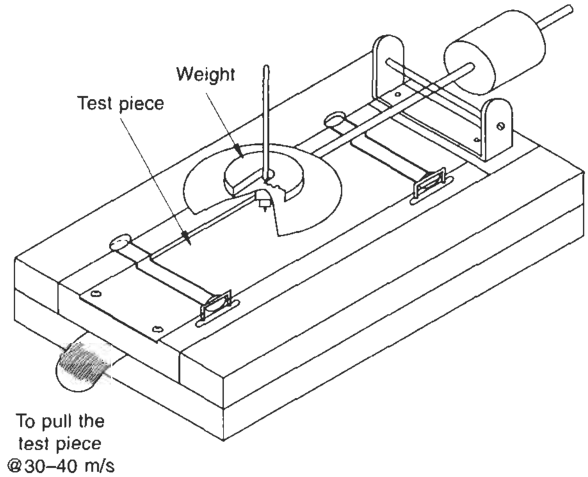

Figure A13.4 Scratch hardness testing apparatus

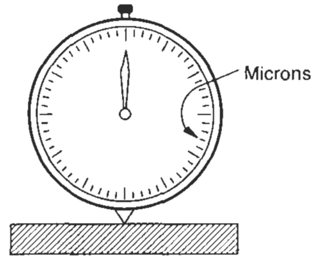

Figure A13.5 Thickness tester gauge

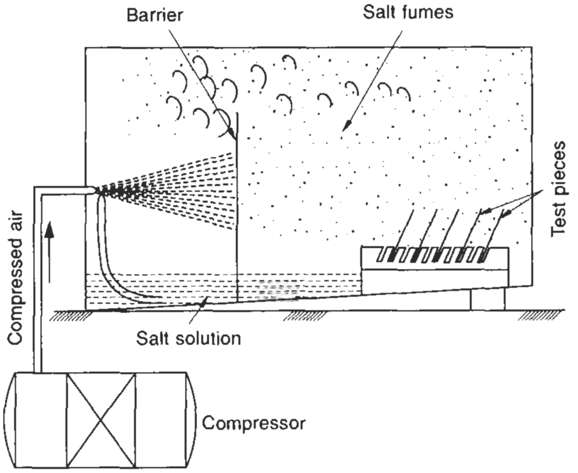

Figure A13.6 Salt spray chamber

8 **Alkali resistance** This can be checked by N/10 (NaOH) solution. When a few drops are spilt on the test piece, or the test piece is dipped for almost half an hour in the solution, it should develop no corrosion spots on the surface.

A13.8 Peelable coating

The finished outer surfaces of the assemblies may be coated with a peelable coating compound which can be easily sprayed and air dried. The coat forms a translucent peelable film, suitable for protecting the finished surfaces during assembly, transportation and installation from scratches, oil marks, grease and dirt etc. The film can be neatly stripped after the equipment is finally installed.

Approximate spraying data are:

- Viscosity of peelable compound by Ford Cup No. 4 ≃ – 150–180 seconds
- Air pressure – 3–4 kg/cm^2 (40–50 lb/in^2)
- Film thickness – 20–30 microns (one coat is enough)
- Drying time – Surface dry 20–30 minutes and hard dry in about four hours

A13.9 Electrostatic technique of powder painting

In the previous section we discussed a more conventional type of painting process. A rather new (early 1960s) and more advanced technology is found in the electrostatic process of a powder coating system. This uses no liquids and no primer coat and can save on paint consumption by up to 50% compared to the conventional liquid paint method, due to an almost closed-loop painting process, incorporating a paint recovery and recycle system. It allows no paint fumes to the atmosphere, and causes no environmental pollution or fire hazard at the workplace. The technique is thus judged to be highly economical, besides being environment-friendly. It also ensures an absolutely uniform and perfect painted surface due to a uniform electrostatic field. Since the field is the same at all points of the metal surface, it attracts the charged powder paint particles with equal force and allows only as much paint at the surface as is actually required and for which the spray gun is set (i.e. the electrostatic field).

Principle of electrostatic technique

Similar electric charges repel and opposite electric charges attract each other. This is the principle on which the process of electrostatic spray painting is based. The paint particles are charged with a strong electrostatic field, which is created at the tip of the electrostatic spray gun, as a result of high potential difference between the tip of the gun and the object. The gun is maintained at a high negative potential with the help of a power pack unit, generating adjustable d.c. output, in the range of 0–100 kV, negative (Figures A13.7(a) and (b)). The variable potential difference is necessary to adjust the distance between the gun and the object and also maintain the paint thickness. Grounding may be performed by the hooks holding the workpiece. The highly charged paint is released through the gun at high pressure and is attracted by the oppositely charged object, to which it uniformly adheres. Both sides of the object may be painted at the same time.

Due to the diminishing strength of the electrostatic field, which will depend upon the thickness of the paint already coated, the spraying process provides a uniform coating on the entire surface. The process may even be made automatic through tracer guns, which may be set to move on a set pattern, like robots. For more details contact the manufacturers. This system may be more advantageous for industries that have jobs of a repetitive nature and in large quantities such as cars and home appliances.

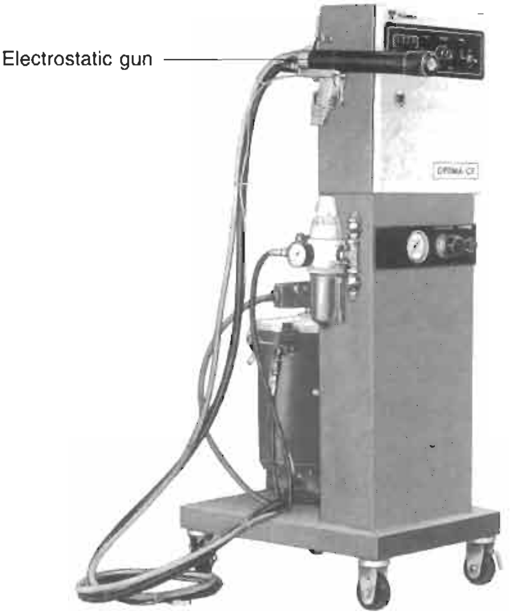

Figure A13.7(a) Electrostatic spray gun with the power pack unit (Courtesy: Statfied)

Figure A13.7(b) Electrostatic gun

Powder paints

Powder paints are dry coating materials and are in the form of dry polymer powders. They are electrostatically charged and applied with force to the surface to be painted. On heating, they polymerize and form a tough film. A surface so produced will generally be better than the conventional wet lacquer paints, for obvious reasons. There are no solvents or thinners involved. The powder is made of resin hardeners, crosslinking components, pigments, extenders and additives etc. The blend is mixed in an extruder at a temperature of 100°C, cooled and granulated and sieved to separate out grits. This process causes no blisters on the surface. It is a single-coat process. In one pass a thickness of up to 60–70 microns can be obtained. The oversprayed powder can be recovered and re-used.

Curing of paint

The paint is then cured in an oven. The curing time will depend upon the thickness of coat, shape of the workpiece and type of oven and its effectiveness. Generally, a coat of up to 60–70 microns at a stoving temperature of 180–200°C (depending upon the type of powder) should take around 10–12 minutes to cure. Contact the manufacturers for exact details.

Precautions to be observed

The storage and processing of powder paints must be carried out under well-controlled conditions, and preferably away from fire hazardous areas. The powder on mixing with air becomes inflammable and can cause an explosion. Powder paints should be stored at about 25°C.

Equipment required

- Electrostatic gun, with built-in protection to cut off power when the gun is too close to the grounded workpiece.
- HT variable d.c. generator (0–100 kV negative) from a single-phase LT power source. The power required is around 60 W only.

- Power output and velocity controller to monitor control over quantity of powder and thickness of coat.
- Spray booth with paint recovery system.
- Oven.

Figure A13.8 shows a simple layout of a powder coating system with a powder recovery arrangement and Figure A13.9 its straight-line layout.

Limitations of powder coating

In an electrostatic technique, as a result of electrostatic

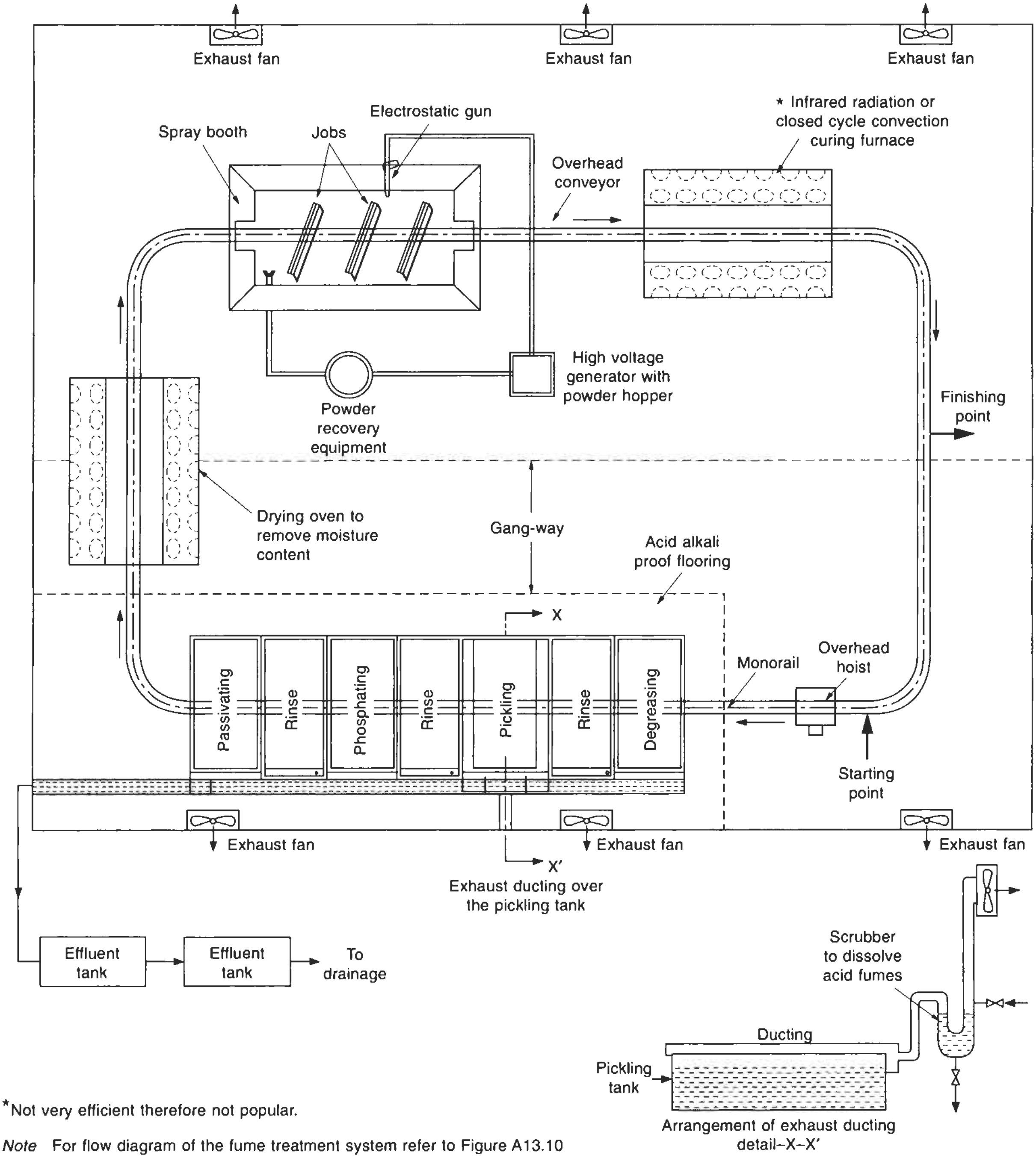

*Not very efficient therefore not popular.

Note For flow diagram of the fume treatment system refer to Figure A13.10

Figure A13.8 A dry painting system illustrating typical layout of a medium-sized paint shop for powder painting showing a seven-tank pre-treatment process

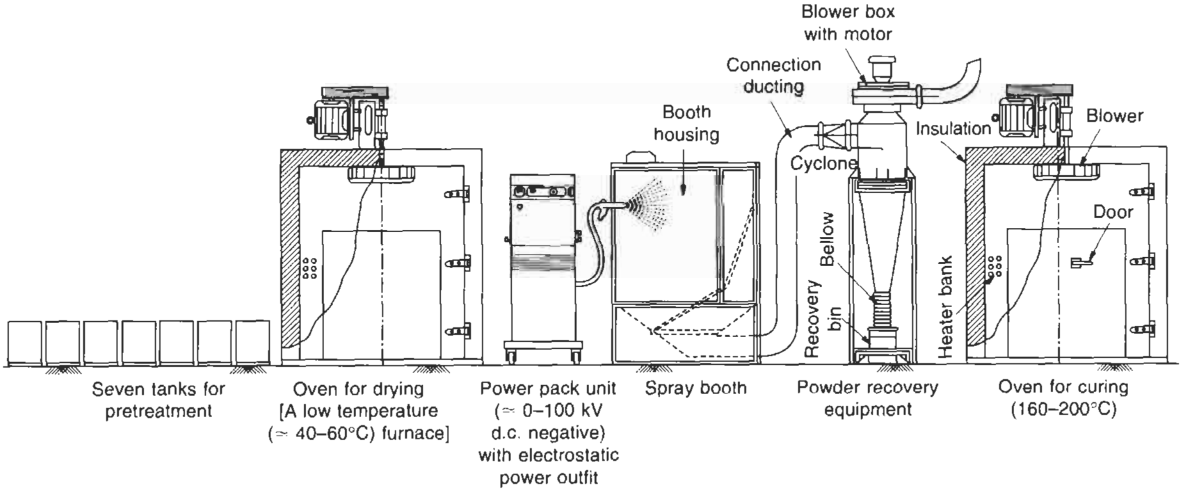

Figure A13.9 Single-line painting process for a powder system

charge, there is a wrapping effect and the paint also deposits at the edges of the other side of the workpiece. It is therefore advisable that the same shade be applied on both sides of the workpiece. While it is possible to apply different shades, this would be cumbersome and more time consuming. A lighter shade inside and a darker shade outside is sometimes required for a switchgear or a controlgear assembly. Although possible, this is not easily performed by this process. When two shades are required a more common practice is to paint one side (usually the outside) first with a powder coating and the other side may then be coated with the liquid paint.

This is satisfactory only for a totally folded construction. At welded joints, powder deposition will be less as a result of flux and carbon deposition. These deposits weaken the electrostatic field at such points and reduce the powder coating. However, in practice, it may not matter for it will hardly affect the coating by 5–10 microns or so, which may be immaterial in total service life. The most obvious disadvantage, however, is encountered when the painted surface is damaged or dented during transportation or installation etc., and is required to be repaired outdoors such as cars or switchgear assemblies at sites. Whenever the surface is damaged, the paint cracks, and it is difficult to be removed or touched up. Although it is possible to peel off the affected area with the help of special solvents, available from the manufacturers of such paints, the process of repairs outdoors is neither convenient nor provides a reliable finish. It is better to carry out repairs only at the plant.

These are a few disadvantages that have been deterrents in promoting this technique in all fields, the automotive segment particularly. Nevertheless, there is a willingness to adopt this technique, wherever possible, in view of its other inherent advantages, discussed earlier, particularly that of being environment-friendly. It is being used for all products where damage during transit or installation is rare such as household appliances, refrigerators, air conditioners, washing machines, etc. In the field of switchgear enclosures, this technique is also being gradually adopted by most manufacturers, as once they are installed, there is little chance of damage.

A13.10 Effluent treatment and fume control

The process related to the paint shop does not impose a significant pollution load on the environment compared to many other industrial activities. It is, however, essential that all possible aspects of environmental pollution by wastewater, environmental hydrology, environmental hydraulics and pneumatics, air, solid waste, noise and hazardous wastes etc. are reviewed to control any kind of pollution within the prescribed limits. Otherwise subsequent tragedies, if caused by environmental negligence in the industrial processes, may lead to the formation of stricter environmental laws.

It is mandatory for a good paint shop to control polluting fumes and treat wastewater before it is discharged into the drains. To do this, effluent treatment processes must be carried out to prevent pollution of the environment and contamination of ponds, rivers or farmlands, into which the wastewater is discharged.

A paint shop may pollute the surroundings in two ways: first, by acid and paint fumes that contaminate the inside of the plant and also pollute the outside environment; second, by the discharge of the pre-treatment tanks and oversprayed paint that pollute the drainage system or where it is finally discharged.

Note

The same process will hold good for treating effluents from an electroplating shop should it also exist with a paint shop. The effluents from an electroplating shop are strong wastes and need special consideration, as noted in the subsequent text and considered in Figure A13.12.

Physio-chemical analysis of effluent waste

In order to design a treatment system for industrial effluents, it is essential to determine the physio-chemical characteristics of the effluents. For this:

- Composite samples can be collected over an 8- or 24-hour period at half-hour or one-hour intervals from the regular effluent discharges such as from the pre-treatment tanks. The volume of each sample will depend upon the variation in the discharge flow rate.
- Grab samples can be collected from periodic discharges such as from the spray booth where the fresh water is replenished only periodically.
- Direct samples can be obtained from the pre-treatment tanks, when a new bath is made and the old one is drained at an interval of two or three days or so, depending upon the amount of work. The samples so collected should be analysed in a recognized test laboratory to ascertain the constituents of the effluents.

A typical analysis report of the samples collected from a medium-sized paint shop handling about 5 MT/day of sheet-metal work, is provided in Table A13.5. These results are only of a final discharge, and may vary from plant to plant, depending upon the amount of work and the process of pre-treatment employed. Although the values obtained are not alarming, they do require effluent treatment, as the untreated effluent does not conform to the limits prescribed as standard tolerance level, to comply with the environmental legislation. Using environmental engineering practices one can obtain the desired standard levels in all parameters as in Table A13.6 or as may be prescribed by the local civic authorities of a particular area.

Table A13.5 also indicates the test results of the samples of the final discharge when the effluents are treated along similar lines as discussed later. The test results are well within the tolerable limits. The recommended tolerance levels are provided in Table A13.6. Any constituent exceeding the prescribed limits must be properly treated before final discharge.

The recommended tolerance levels, as noted in Table A13.6, are applicable to an industrial area where the final discharge of the treated effluent is let through a public sewer. These levels may vary, depending upon the location of the plant. For sensitive or residential areas, for instance, the levels may be more conservative, decided by the local civic authorities. The effluent treatment will depend upon these values.

Table A13.5 Average test results of effluent discharge (tank wash and spray booth mix of a medium-sized paint shop under consideration) before and after treatment

Sr. no.	*Pollutant*	*Test results*		*Tolerance level*
		Before treatment	*After treatment*	
1	BOD	58 mg/l	25 mg/l	30 mg/l
2	COD	604 mg/l	242 mg/l	250 mg/l
3	pH value	8.25	6.8	5.5–9.0
4	Total dissolved solids	4208 mg/l	1950 mg/l	–
5	Total suspended solids	546 mg/l	25 mg/l	100 mg/l
6	Oil and grease	9 mg/l	4 mg/l	10 mg/l
7	Phosphate as P	62.2 mg/l	Nil	5 mg/l
8	Chloride as Cl	1985 mg/l	510 mg/l	600 mg/l
9	Zinc as Zn	3.5 mg/l	Nil	5 mg/l

Table A13.6 Recommended tolerance levels

Sr. no.	*Parameter*	*Recommended tolerance level (for the disposal of treated effluent into inland surface waters)*
1	Level of BOD (biochemical oxygen demand)	30 mg/l
2	Level of COD (chemical oxygen demand)	250 mg/l
3	Presence of alkali traces	Maximum up to 9.0, as measured by pH value
4	Presence of acid traces	Not less than 5.5 as measured by pH value *Notes:* (a) Clean water has a pH value of 7 to 7.5 (b) 1 mg/l = parts per million (ppm) (c) pH: the logarithm of the reciprocal of the hydronium ion concentration. (Hydronium ion concentration of a solution varies on the degrees of alkalinity and acidity)
5	Total suspended solids	100 mg/l
6	Oil and grease	10 mg/l
7	Dissolved phosphates (as P)	5 mg/l
8	Chlorides (as Cl)	600 mg/l (drinking water contains around 400–500 mg/l)
9	Sulphates (as SO_4)	1000 mg/l
10	Cyanides (as CN)	0.2 mg/l
11	Total chromium (as Cr)	2 mg/l
12	Hexavalent chromium (Cr)	0.1 mg/l
13	Zinc (as Zn)	5 mg/l
14	Iron (as Fe)	3 mg/l
15	Total heavy metals	7 mg/l
16	Phenolic compounds (as C_6H_5OH)	1 mg/l
17	Lead (as Pb)	0.1 mg/l
18	Copper (as Cu)	2.0 mg/l
19	Nickel (as Ni)	2.0 mg/l
20	Bio-assay Test	90% survival 96 hours

Source *Ministry of Environment and Forests, CPCB*

Effluent treatment and discharge of waste water

The appropriate method for effective effluent treatment is to segregate the strong wastes from the wastewater and treat them separately, as shown in Figure A13.12. The strong wastes consist of discharges from electroplating plant, spray booth and spent passivation liquor etc. Accordingly all the pollutants noted in Table A13.5 can be treated in the following manner:

1 **Pre-treatment area** Acid fumes can be controlled by providing exhaust ducts (lip suction) on the acid pickling tank with a scrubber in the exhaust pipe as shown in Figure A13.1 to absorb the acid fumes from the tank and its surroundings. This then passes them through the scrubber, to have them dissolved in soda water and then discharged to the atmosphere. The acid fumes with soda water become converted into H_2SO_4 or HCl, depending upon the acid used for pickling. The saturated soda water collected at the bottom of the scrubber unit is then transferred to the effluent treatment plant for further treatment. A typical flow diagram illustrating the fume treatment system is shown in Figure A13.10.

The wash water and the spent acid from all the pre-treatment tanks is also transferred to the effluent treatment plant for further treatment. Spent passivation liquor from the passivation tank is a strong waste and it may be provided with a separate pipeline to the effluent treatment plant, as shown in Figure A13.12.

2 **Painting area (applicable to liquid paints)**
- A spray booth can be installed as discussed above and provided with a running-water curtain system and an exhaust arrangement to absorb the oversprayed paint and its fumes. The paint fumes are circulated through the curtain of water and the harmless fumes are then discharged to the atmosphere.
- The wash water mixed with paint which is a strong waste can be transferred (periodically, if the water curtain system is a closed cycle rather than a continuous running water system) to the effluent treatment plant for further treatment, as shown in Figure A13.12.

3 **Ventilation** The paint shop must be well ventilated and provided with exhaust fans to circulate fresh air within the shop. Roughly 20 to 30 air discharges per hour are considered adequate. Wet-painted surfaces, however, must be protected from suspended dust particles in the atmosphere and this can be done by

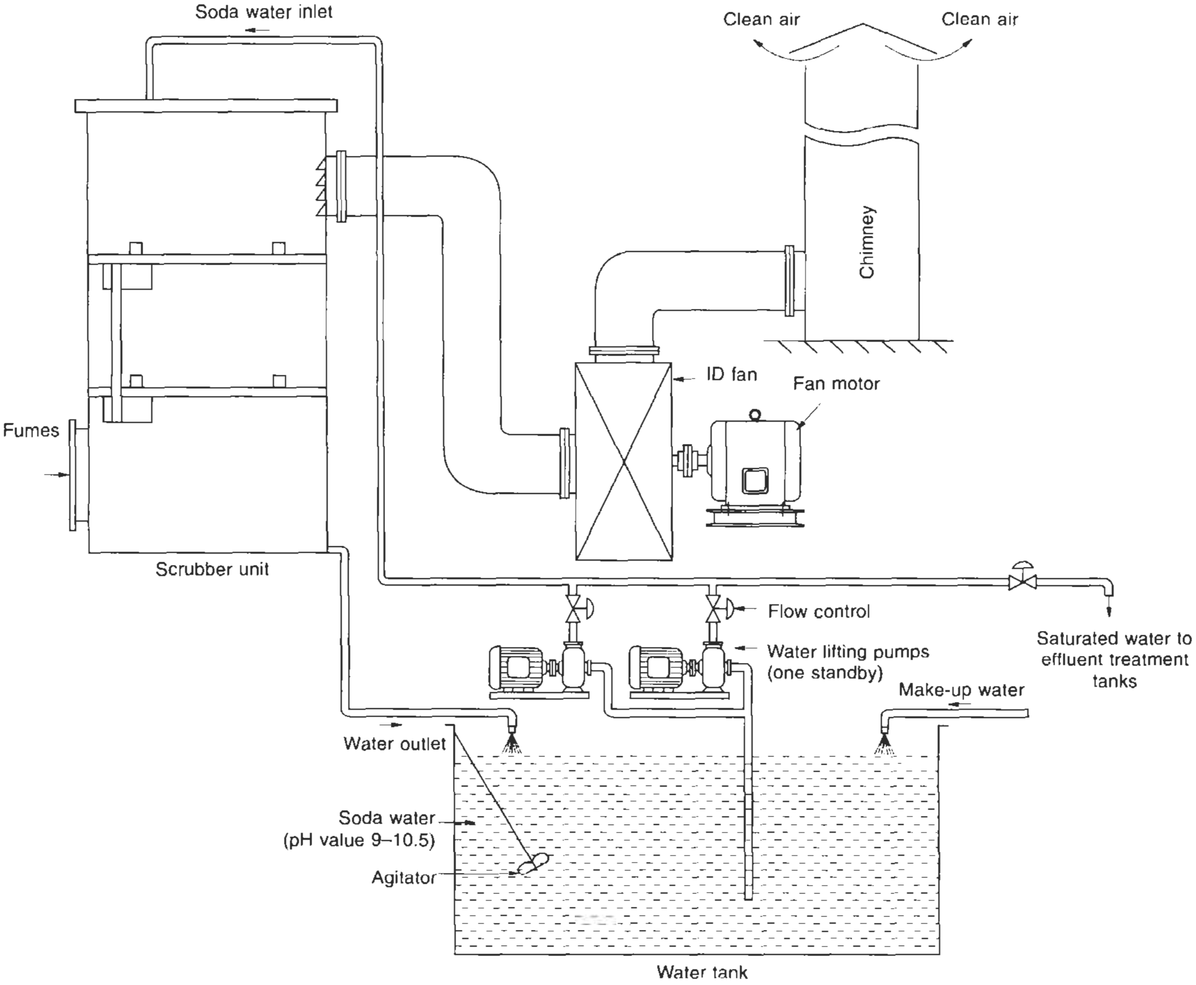

Figure A13.10 Typical flow diagram for fume treatment system promptly drying in an oven. Air-drying paint therefore must be avoided as far as possible.

Wastewater treatment

Rapid industrialization has created many problems for the treatment and disposal of industrial wastes which are mainly responsible for the pollution of rivers, ponds and farmlands, when they are discharged directly, without proper treatment.

The effluents from a paint shop are slightly alkaline with moderate to weak BOD concentration. They may also contain traces of heavy metals such as zinc and chromium which, if not treated, can create environmental and health hazards by harming crops, subsoil drinking water and aquatic flora and fauna. These effluents must be meticulously treated and neutralized before discharging them into the drains. The method of treatment is simple and can be performed along the following lines.

Figure A13.11 illustrates a flow diagram of a simple effluent treatment plant. Chemicals are fed into the treatment tanks for neutralizing, coagulation, flocculation and detoxification. Sufficient air incorporation by means of surface or diffused aeration is carried out to replace the displaced oxygen in the waste waters. Figure A13.12 shows the layout and hydraulic profile of a typical effluent treatment plant which can be installed for the treatment of effluents generated from a medium-sized paint shop. In the figure we have assumed about 5 MT/day of sheet metal work being handled by the shop. The actual sizes and numbers of tanks will depend upon the amount of discharge and type of effluents. In Figure A13.12 the sizes given should be adequate for the size of paint shop we have considered. The process in the flow diagram would be capable of handling all qualities of MS sheets. The brief treatment process is described below.

For level of biological chemical demand (BOD)

BOD is a measure of organic matter present in wastewater and can be degraded with the help of biomass. The level of BOD, if it exceeds the permissible limits of 30 mg/ℓ, will render the wastewater septic and unsafe for use. A higher level of BOD, when detected, can be degraded (neutralized) biologically with the help of biomass (micro-organism). The biomass consumes and degrades the organic matter present in the effluent.

Since the discharges of effluents from such a paint shop will generally be moderate the required BOD level is automatically maintained without any further treatment. Where required, a moderate additional oxygen supply, for the growth of biomass, can be made available through aeration of the wastewater. This can be carried out by passing oil-free compressed air through the effluent. The percolation of effluent dissolves additional oxygen from the atmosphere and helps the growth of bacteria. The oxygen requirement would be about 2 kg/kg of BOD removed.

In cases of still higher levels of BOD an additional supply of biomass may become essential, and this can be easily obtained from cowdung or municipal waste. To supplement biomass growth, nutrients such as urea and di-ammonium phosphate may be added.

The aeration system adopted should be capable of converting the organic waste into more stable inorganic forms or to cellular mass. The effluent is aerated at all possible stages as shown in Figure A13.12. The flow from reaction and aeration tank No. 5 after primary and chemical treatment is passed through the primary sedimentation tank No. 6, where most of the soluble and colloidal organic materials are metabolized by a diverse group of bacteria to carbon dioxide and water. At the same time, a sizeable fraction of the effluents converted into a cellular mass settle by gravity sedimentation.

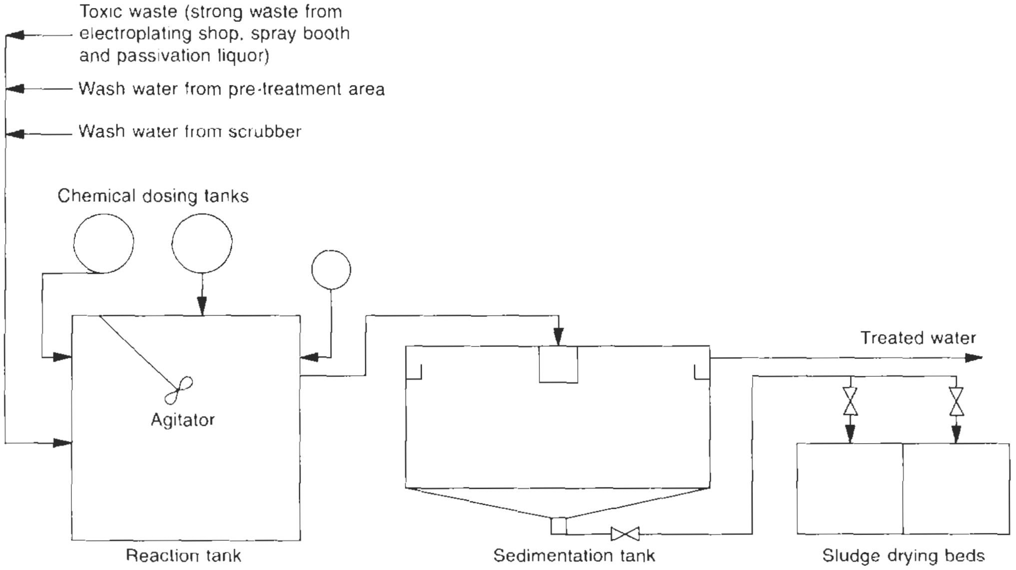

Figure A13.11 Flow diagram – effluent-treatment plant

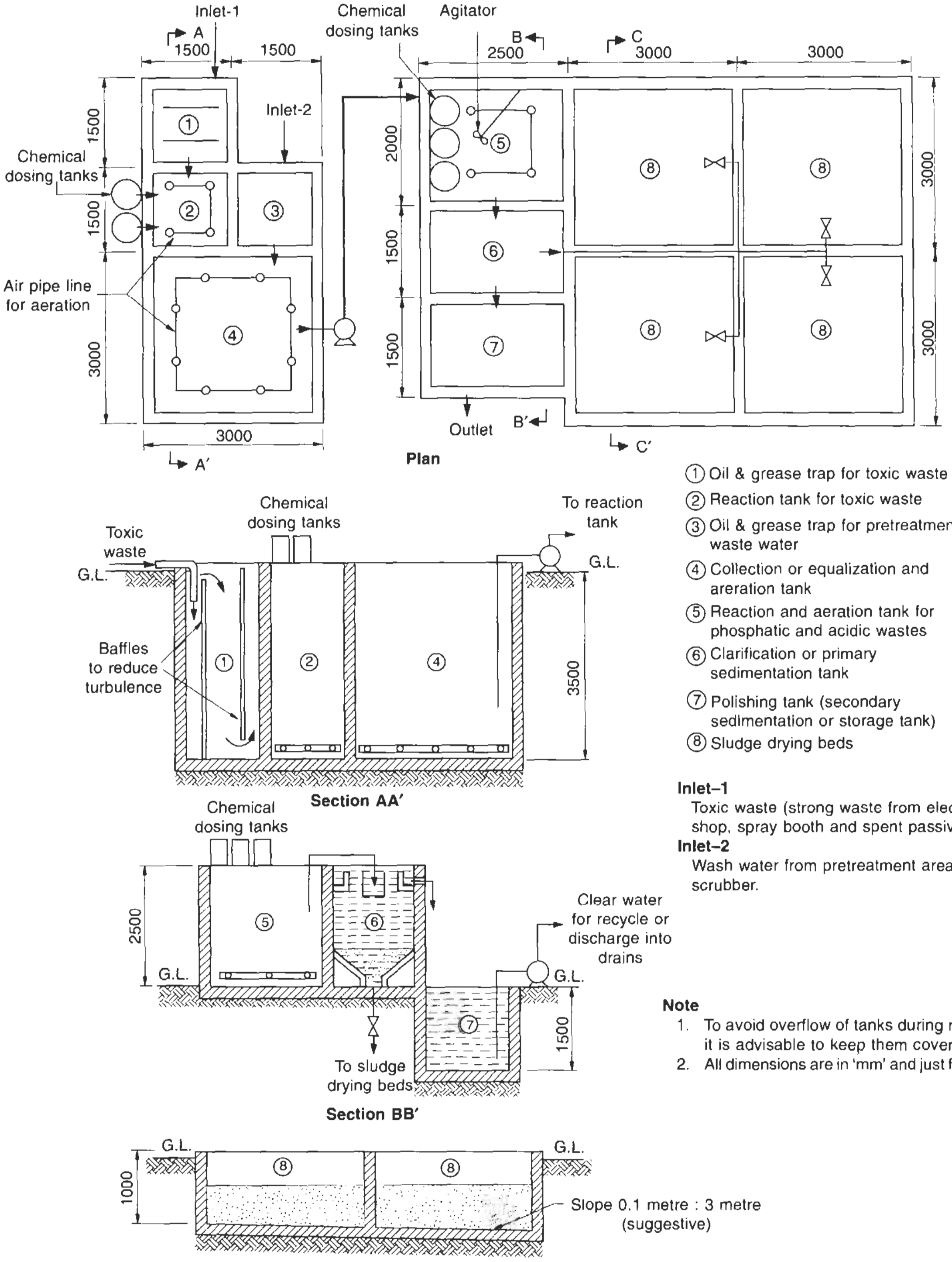

① Oil & grease trap for toxic waste
② Reaction tank for toxic waste
③ Oil & grease trap for pretreatment waste water
④ Collection or equalization and areration tank
⑤ Reaction and aeration tank for phosphatic and acidic wastes
⑥ Clarification or primary sedimentation tank
⑦ Polishing tank (secondary sedimentation or storage tank)
⑧ Sludge drying beds

Inlet–1
Toxic waste (strong waste from electroplating shop, spray booth and spent passivation liquor)

Inlet–2
Wash water from pretreatment area and scrubber.

Note

1. To avoid overflow of tanks during rainy season, it is advisable to keep them covered.
2. All dimensions are in 'mm' and just for illustration.

Figure A13.12 Layout of a typical effluent-treatment plant

The sedimentation and secondary settling tanks Nos 6 and 7 are designed to provide sufficient retention time for settling of biomass. The settled biomass is recycled to aeration tank No. 5 to maintain the desired mixed liquor suspended solids (MLSS). The sludge settled in tank No. 6 can be drained to the sludge drying beds No. 8, where it can be dried, scrapped and disposed on land. The filtrate from the sludge drying beds is taken back to sedimentation tank No. 6. The overflow from the secondary sedimentation tank No. 7 is treated water, free from effluents and can be discharged into the drains or farmland or can also be recycled.

For level of chemical oxygen demand (COD)

COD provides a measure of the oxygen equivalent to that portion of the organic matter in a sample that is susceptible to oxidation by a strong chemical oxidant. A higher level of COD can be degraded (neutralized) chemically. The level of COD, however, automatically reduces with the level of BOD and no further treatment is normally necessary.

To neutralize the alkali and acid effluents

The alkalinity or acidity in wastewater is usually determined by titration of the wastewater with a standard alkali or acid to the transition point of methyl orange (pH range 3.1 to 4.4). Almost every effluent which is free from caustic alkalinity (pH less than 8.3) requires addition of acid to bring it to the methyl orange transition point. If the wastewater has a pH greater than 8.3, a titration with acid using a phenolphthalein indicator should be made and the result recorded as alkalinity to the phenolphthalein.

If the liquid is acid to methyl orange, alkalinity is absent and the acidity must be determined. When methyl orange is used as an indicator for titration, the result may be recorded as mineral acid acidity and for a few organic acids, which give acidic solutions, the result may be recorded as acid to methyl orange. In some cases it may be desirable to determine total acidity by titration with alkali using phenolphthalein as an indicator, in which case the result is recorded as total acidity. This would include acidity due to carbon dioxide, as well as that due to mineral and organic acids.

The alkalinity and acidity is generally controlled, based on the amounts and also by maintaining the pH value of the effluent discharge between 5.5. and 9.0, the ideal being around 7.5, as far as possible. The pH can be checked with the help of a pH meter.

Acidic effluents can be treated with sodium carbonate (Na_2CO_3) or calcium hydroxide ($Ca(OH)_2$), i.e. lime water. The basic (alkaline) effluents can be treated with any mineral acid, preferably sulphuric acid (H_2SO_4), until the required pH value is obtained.

For phosphating and passivating effluents (phosphate as P)

These are also acidic in nature, and are taken care of automatically when the pH value of the effluents is maintained at the required level. If the passivation is carried out by using chromic acid, chromium must be treated separately by using sodium metabisulphite.

To remove solids

By using sedimentation (settling) tanks, the suspended solids can be removed as they settle at the bottom. Proper coagulants and flocculants such as lime and alum are utilized to convert the amount of dissolved matter into suspended solids.

The numbers and sizes of tanks will depend upon the amount of discharge and the type of effluents. For a normal paint shop, the size should be such that it is able to allow enough retention time for the suspended solids to settle at the bottom. To avoid turbulence in the tanks, the arrangement of inlet and discharge pipes can be as illustrated in Figure 13.12. From the polishing tank No. 7 clear water, which will meet the desired standards, can be discharged into the drains.

The scum of oil and grease, if any, collected at the surface of the tanks may be scooped out and destroyed with the waste paints. The sludge (solids) that settle at the bottom can be collected from the underflow of the tanks or pumped out.

For zinc and other heavy metals

The treatment for zinc can be carried out with normal coagulants until it has formed any complex (chemical compound). Other heavy metals and cyanide constituents, however, will require special attention.

Disposal of waste primer, paint, oil and grease scum

These are considered to be highly hazardous (strong) wastes. The oversprayed paint that collects at the bottom of the spray booth, and on its baffles, as well as the scum of oil and grease may be collected and stored in drums and sealed. It is then disposed of at a recognized dumping ground for industrial wastes or destroyed in an incineration plant.

Relevant Standards

IEC	*Title*	*IS*	*BS*	*ISO*
–	Methods of test for ready mixed paints and enamels	101-1 to 9	BS 3900	3205, 3270
–	Method for specifying phosphate conversion coatings for metals	3618/1991 6005/1991	BS 3189/1996	9717/1990
–	Apparatus for salt spray test	11864/1991	–	–
–	Specification for electrostatic hand held spraying equipment for non flammable material for painting and finishing	–	BS EN 50059/1991	–

Relevant Standards of American Society for Testing Materials

ASTM DI654/-79a/1984	Standard method for evaluation of painted or coated specimens subjected to corrosive environments
ASTM B117/1990	Standard test method of salt spray (FOG) testing

Notes

1 In the tables of relevant Standards in this book while the latest editions of the standards are provided, it is possible that revised editions have become available. With the advances of technology and/or its application, the updating of standards is a continuous process by different standards organizations. It is therefore advisable that for more authentic references, readers should consult the relevant organizations for the latest version of a standard.

2 Some of the BS or IS standards mentioned against IEC may not be identical.

3 The year noted against each standard may also refer to the year of its last amendment and not necessarily the year of publication.

List of formulae used

Selection of bases

$$\text{Per unit quantity, p.u.} = \frac{\text{Actual quantity}}{\text{Chosen base}} \tag{13.1}$$

Actual impedance

$$Z_1 = \frac{V^2}{\text{kVA} \times 1000}\ \Omega \tag{13.2}$$

If Z_p is the p.u. impedance then

$$Z_p = \frac{Z_1 \cdot (\text{base kVA}) \times 1000}{\text{Base } V^2} \tag{13.3}$$

$$Z_{p2} = Z_{p1}\left(\frac{V_1^2}{\text{kVA}_1} \times \frac{\text{kVA}_2}{V_2^2}\right) \tag{13.4}$$

Z_{p1} = p.u. impedance at the original base, and
Z_{p2} = p.u. impedance at the new base

Fault current

$$I_{SC} = \frac{I_r}{Z_p} \text{ i.e. } \frac{\text{Rated current}}{\text{Short-circuit unit impedance}} \tag{13.5}$$

$$\text{Fault MVA} = \frac{\text{Base MVA}}{Z_p} \text{ etc.} \tag{13.6}$$

Further reading

1 Beeman, D. (ed.), *Industrial Power Systems Handbook*, McGraw-Hill, New York.
2 Coelho, F. 'Modern MCC designs', *Siemens Circuit*, **XXII**, July, No. 3 (1987).
3 Lythall, R.T., Group motor control boards, *Electrical Review* 30 June (1961).
4 Lythall, R.T., *The J & P Switchgear Book*, Butterworths.
5 Lythall, R.T., *Simplified Short-Circuit Calculations*, Belmos Peebles Ltd.

14

Testing of Metal-enclosed Switchgear Assemblies

Contents

14.1 Philosophy of quality systems

This has been covered in Section 11.1.

14.1.1 Quality assurance

To fulfil quality requirements, the material inputs going into the making of assemblies such as MS sheets (for their surface finish, thickness and bending properties), hardware (for their correct sizes, quality of threads and tensile strength etc.), busbars and cables (for their area of cross-section, conductivity and quality of insulation in the case of cables), insulators and supports (for their sizes and quality of SMC, DMC or any other material used), and all other switchgear components such as breakers, contactors, switches, fuses, CTs, PTs and meters etc. (for their ratings, duty class, class of accuracy (wherever applicable) and specifications etc.) must be properly checked and recorded, according to the manufacturers; internal quality checks and formats. This should be carried out before they are used in assemblies to eliminate any inconsistency in a material or component.

Similar stage inspections are necessary during the course of manufacturing to assure quality at every stage and eliminate any mistakes in construction, assembly or workmanship during the course of manufacturing. Thus, a product of desired specification and quality is ensured.

14.1.2 Purpose of testing

The purpose of testing a switchgear or a controlgear assembly is to assure its compliance with the design parameters, material inputs and manufacturing consistency. Here we discuss this for a switchgear assembly only. For tests on a controlgear assembly, the relevant tests may be chosen from those prescribed for a switchgear assembly.

14.2 Recommended tests

The following are the recommended tests according to IEC 60439-1 for LT, IEC 60694, IEC 60298 for HT and ANSI C-37/20C for LT and HT switchgear assemblies that may be carried out on a completed switchgear assembly.

14.2.1 Type tests

Type tests are conducted on the first enclosure of each voltage, current rating and fault level to demonstrate compliance with electrical and constructional design parameters. The tests provide a standard reference for any subsequent enclosure with similar ratings and constructional details. The following tests may be conducted to demonstrate verification of the following:

1 Insulation resistance or measurement of leakage current, both before and after the dielectric test
2 Dielectric properties:
  - Power frequency voltage withstand or HV test on power as well as control and protective circuits
  - Impulse voltage withstand test for system voltages 2.4 kV and above
3 Temperature rise limits (or rated continuous current capacity)
4 Short-circuit strength
5 Momentary peak or dynamic current
6 Protective circuits
7 Clearance and creepage distances
8 Degree of protection:
  - Enclosure test
  - Weatherproof test
9 Mechanical operation.

14.2.2 Routine tests

Routine tests are conducted on each completed assembly, irrespective of voltage, current, fault level and constructional details and whether it has already undergone the type tests. The following steps will form routine tests:

1 Checking for any inadvertent human error during assembly.

  This check may be carried out both at the works, after final assembly, and at the site after the installation before conducting routine tests or energizing the assembly. The checks can be carried out at a lower voltage to detect any shorting links or spanners left inadvertently on live terminals, weak insulation or insufficient clearance or creepage distances between the phases or phase to ground conductors. In the case of a defect the same must be rectified immediately.
2 Inspection of the switchgear assembly to check the following:
  - General arrangement and appearance
  - Mechanical operation of all movable parts and interlocks
  - Random checking of bolted connections for proper jointing and tightening
  - Generally all important requirements as discussed in Section 13.4 that may have been required in the specifications of the switchgear or controlgear assembly.
3 Inspection and verification of electrical wiring:
  - For power connections
  - For controls, metering and sequential operations if any
  - For protective circuits
  - For grounding of instrument transformers
  - For checking the insulation of the control wiring
  - For a polarity test of CTs.
4 Verification of insulation resistance or measurement of the leakage current, both before and after the dielectric test.
5 Verification of dielectric properties, limited to power frequency voltage withstand or HV test on power as well as control and protective circuits.

14.2.3 Seismic disturbances

In Section 14.6 we provide a brief account of these disturbances as well as the recommended tests and their procedures to verify the suitability of critical structures, equipment and devices for locations that are earthquake-prone.

14.2.4 Field tests

Generally the following tests may be carried out at site after installation and before energizing an assembly:

1 Checking for any human error as described in Section 14.2.2.
2 Visual inspection of the switchgear assembly
3 Inspection of electrical wiring (see Section 14.2.2)
4 Verification of insulation resistance or measurement of the leakage current, both before and after the dielectric test, when an HV test is being conducted at site.
5 Verification of dielectric properties, limited to power frequency voltage withstand test. This test is neither mandatory nor recommended, but may be required if a modification is carried out in the switchgear assembly at site.

14.3 Procedure for type tests

Below we outline the procedure for conducting the above tests at the manufacturer's works.

14.3.1 Electrical measurements

Selection of testing instruments

The instruments used for electrical measurements must conform to IEC 60051-1. Instruments with the following accuracies must be used:

- For routine tests: class 1.0 accuracy or better, and
- for type tests: not below class 0.5 accuracy.

The current transformers and potential transformers must conform to IEC 60044-1 and IEC 60044-2 respectively. Instrument transformers with the following accuracies must be used.

- For routine tests: Class 1 accuracy
- For type tests: Class 0.5 accuracy

14.3.2 Verification of insulation resistance

This test is covered under field tests, Section 14.5(4).

14.3.3 Verification of dielectric properties

Power frequency voltage withstand or HV test

The test voltage must be as close to a sine wave as practicable and frequency as noted in column 3 of Tables 14.1 and 14.2, for series II and Table 13.2 for series I voltage systems, and applied for one minute as follows:

1 If relays, instruments and other auxiliary apparatus, have a voltage other than the main voltage, they should be disconnected from the main circuit, while conducting this test and tested separately, according to their voltage rating as shown in Table 14.3.
2 All the CT (current transformer) secondaries must be shorted and grounded while conducting the test on the main circuit. This condition is redundant while conducting test on the auxiliary circuit.
3 PT (potential transformer) windings must be disconnected by removing the control fuses from its both sides.
4 The test voltage at the moment of application should not exceed 50% of the rated test value and should be

Table 14.1 For series II voltage systems
Insulation levels, power frequency and impulse withstand voltages for metal-enclosed switchgear assemblies

Nominal system voltage 1	*Rated maximum system voltage* 2	*One-minute power frequency voltage withstand at a frequency not less than the rated 60 Hz (phase to ground)* 3				*Standard lightning impulse (1.2/50 μs) voltage withstand (phase to ground)* 4	
kV (r.m.s)	kV (r.m.s.)	kV (r.m.s.)		kV (r.m.s.)		kV (*peak*)	
		Dry (1 min.)		Wet[a] (10 s)			
		List I	List II	List I	List II	List I	List II
4.16	4.76	19	19	–	–	60	60
7.20	8.25	26	35	24	30	75	95
13.80	15.0	35	50	30	45	95	110
23.0	25.8	50	70	45	60	125	150
34.5	38.0	70	95	60	80	150	200
–	48.3	120	120	100	100	250	250
69.0	72.5	160	160	140	140	350	350

Notes For still higher voltages refer to IEC 60694.
For impulse withstand voltages across the contact gaps of an interrupting device, refer to IEC 60694 and IEC 60298.
[a] Wet or dew test is a weatherproof test (Section 14.3.10) and is meant for outdoor assemblies.
Based on IEC 60694

Table 14.2 For series II voltage systems
Insulation levels, power frequency and impulse withstand voltages for metal-enclosed switchgear assemblies

Nominal system voltage *1*	*Rated maximum system voltage* *2*	*One-minute power frequency voltage withstand at a frequency not less than the rated 60 Hz (phase to ground)* *3*		*Standard lightning impulse (1.2/50 μs) voltage withstand (phase to ground)* *4*		*One-minute d.c. voltage withstand (phase to ground)* *5*	
kV (r.m.s.)	kV (r.m.s)	kV (r.m.s.)		kV (peak)		kV	
		b	c	b	c	b	c
0.48	0.508	2.2	–	–	–	3.1	–
0.6	0.635	2.2	–	–	–	3.1	–
4.16	4.76	19.0	19	60	60	27	27
7.2[a]	8.25	36.0	26.0	95	75	50	37
13.8	15.0	36.0	36.0	95	95	50	50
14.4	15.5	–	50.0	–	110	–	70
23.0	25.8	–	60.0	–	125	–	–
34.5	38.0	80.0	80.0	150	150	–	–
69.0	72.5	–	160.0	–	350	–	–

[a] ANSI C-37/20C specifies this rating only for metal-clad switchgear assemblies and not for metal-enclosed bus systems.
[b] With breaker assemblies
[c] With isolator assemblies
Based on ANSI C-37/20C

Notes

1 (a) The procedure for a d.c. test is same as for a.c. Due to variable voltage distributions when conducting d.c. tests, the ANSI Standard recommends that the matter may be referred to the manufacturer for system voltages 25.8 kV and above.

(b) For a power frequency voltage withstand test, the d.c. test is generally not recommended on a.c. equipment, unless only d.c. test voltage is available at the place of testing. The d.c. test values, as provided above, are therefore for such cases only and are equivalent to power frequency a.c. voltage withstand test values.

2 Power frequency tests after erection at site, if required, may be conducted at 75% of the values indicated above. Also refer to field tests (Section 14.5, Table 14.8).

Table 14.3 For series I voltage systems. Dielectric test voltages for control and auxiliary circuits and also LT power circuits

Nominal auxiliary/power voltage	*One-minute power frequency voltage withstand at any frequency between 45 and 65 Hz (between phases and ground)*
Control and auxiliary circuits	
1 Where the rated insulation voltage does not exceed 60 V	1000 V (r.m.s.)
2 Where the insulation voltage exceeds 60 V	(2 V_r + 1000) volts with a minimum of 1500 V (r.m.s.).
Power circuits	
3 For voltages between 300 and 660 V	2500 V (rms)

As in IEC 60439-1

raised gradually but rapidly and then maintained at that level for one minute, reduced rapidly up to 50% of its value and then disconnected.

5 During the test, one pole of the testing transformer should be connected to ground and the frame of the assembly.

(i) For fixed as well as draw-out assemblies

The trolley is in the service position in draw-out assemblies (Section 13.3.2).

1 Between phase to phase and each phase to ground with the switching devices in the closed position
2 Between phase to phase and each phase to ground with the switching devices in the open position. This test is to be conducted on both line and load sides of the switching device.
3 Between the line and the load terminals of each phase, the main switching devices being in the open position.

(ii) For draw-out assemblies

The trolley is in test position and the main switching device in the closed position,

1 Between phase to phase and each phase to ground on both line and load fixed terminals.
2 Between line and load fixed terminals of each phase. ANSI-C37/20C recommends this test to be conducted at a value 10% higher than specified in Table 14.2 for both power frequency and impulse voltage withstand tests.

(iii) Additional test requirements for outdoor HT assemblies

The following are a few additional test requirements for an outdoor HT assembly, recommended by IEC 60694 for rated voltages up to 100 kV.

- **Wet test** While an indoor type switchgear assembly requires only a dry power frequency voltage withstand test, the outdoor type switchgear assembly also needs a wet test under wet conditions to check the external insulation. For the test procedure refer to IEC 60060-1.
- **Artificial pollution test** The purpose of this test is to provide information on the behaviour of the external insulation while operating in polluted conditions. The test may be performed only if thought necessary, depending upon the degree of contamination at the place of installation. For the test procedure refer to IEC 60060-1.
- **Test results** Any disruptive discharge or electrical breakdown during the application of high voltage should be considered as a dielectric failure.

14.3.4 Impulse voltage withstand test (for system voltages 2.4 kV and above)

The impulse voltage is applied as shown in Tables 14.1 and 14.2 for series II or Table 13.2 for series I voltage systems, with a full wave standard lightning impulse 1.2/50 µs (Section 17.6.1) a front time equal to or less than 1.2 µs and the crest value equal to or more than the rated full wave impulse withstand voltage. According to ANSI C-37/20C, three positive and three negative impulses must be applied without causing damage or flashover. Should a flashover occur in only one or any group of three consecutive tests, three more tests are allowed to be conducted. If the equipment passes the second group of three consecutive tests, it should be considered as acceptable. The flashover which occurred earlier may be considered as random and irrelevant.

14.3.5 Verification of temperature rise limits (or rated continuous current capacity)

The test must be carried out indoors, reasonably free from draughts. Thermocouples should be used to measure the temperature, and the ambient temperature can be measured by thermocouples or thermometers.

Measurement of ambient temperature

The ambient temperature should be measured during the last quarter of the test by at least three thermometers or thermocouples placed equally around the switchgear assembly, at almost the centre level and at about 1 metre from the body of the enclosure. The ambient temperature to be considered must be the average of these readings and should be within 10–40°C. To ensure that the ambient temperature is unaffected by magnetic field, alcohol thermometers must be used and not mercury thermometers.

Measurement of temperature of enclosure, insulation and current-carrying parts

The thermocouples or RTDs should be located such as to measure the hottest spot, even if this means drilling a hole in the current-carrying parts.

Procedure

1. The test may be conducted on a completed assembly of a switchgear or a controlgear or a part of it, whichever may be regarded as a complete section. The purpose is to achieve a near-service condition. To do this in a multi-section switchgear or controlgear assembly it is advisable to test at least three vertical sections joined together and measuring the temperature rise on the middle section. This is to restrict the extra heat dissipation, through the sides, except natural heat transfer, and also to simulate the influence of heat transfer to this section through other sections.
2. The test must be conducted at the rated* current, at a frequency with a tolerance of +2% and –5% of the rated frequency and the voltage in a sinusoidal waveform, as much as practicable. See also Section 11.3.2. The test is carried out until the temperature reaches almost a stable state, i.e. when the variation does not exceed 1°C per hour. To shorten the test duration, the current may be enhanced during the initial period to reach a fast, stable state.
3. Since it may not be practical to create the actual operating conditions at the place of testing, normal practice is to simulate these conditions on the following basis.

   The heat generated by a current-carrying component or conductor is its watt loss and is expressed by I^2R, where I is the current and R the resistance of the circuit under consideration. The watt loss of each current-carrying component installed in the test assembly is estimated and added to arrive at the approximate watt loss during the actual operation. Based on this loss is calculated of the total heaters required. These heaters are then suitably located in the test assembly to represent all the incoming and outgoing feeders, their power cables and any other current-carrying component.

Sources generating heat

1. **Power circuits**
   - Interrupting devices – switches, breakers, MCCBs, power contactors and fuses
   - Thermal elements of the overload relays
   - Incoming and outgoing power contacts.

   In these circuits the watt loss is ascertained, by measurement of the resistance of their conducting paths.
2. **Control and auxiliary circuits**

   Coils of the power contactors

   Coils of the auxiliary contactors (relays)

---

*All the circuits may carry current based on the diversity factor. The loads may be substituted by space heaters.

Coils of the timers
Control fuses
Coils of the measuring instruments (A, kWh and kW meters etc.)
Wattage of the indicating lights
VA burden of the instrument and control transformers and Control terminals etc.

The VA burden and the corresponding p.f. of all such components are provided by their manufacturers. VA cosϕ is the content of watt loss. For more details see Section 15.6.1(iii).

3 **Power connections and control wiring** The loss within such components is measured by their resistance, which, in the case of cables, is a function of their size and length. The loss in the external power cables is calculated similarly, parts of which run inside the assembly to connect the various feeders, by measuring their average length inside the assembly.

Calculating the resistance of each current-carrying component separately is a very cumbersome and lengthy procedure, in addition to being not very accurate due to the large number of approximations. Some of the joints and components may still have been omitted from these calculations. The easier and more often recommended procedure is to measure the resistance between the extreme ends of each feeder in its ON condition by an Ohm-meter. This resistance will also include the contact resistance of each terminal and joint.

With the rating of each feeder and the resistance so obtained, the I^2R loss of each feeder can be calculated and totalled. This is the loss at the ambient temperature at the test place. It may be corrected to the operating temperature of the assembly as shown in Table 14.5. For sample calculations, we have considered it to be 90°C. Table 14.4 provides a step-by-step procedure for estimation. The total watt loss of the assembly so determined is an estimate for the required heaters that may be installed inside the assembly, to achieve almost a true replica of the watt loss, as during actual operation. These heaters are located within the assembly under test to circulate heat uniformly to all parts to reach a rapid thermal equilibrium. To provide heaters for individual feeders is very cumbersome and serves no purpose. The operating conditions are simulated similarly in the adjacent panel sections and heaters are provided there also. If the bus rating of these sections is different from the rating of the section under test, then the heating effect of these busbars should also be estimated and the rating of the heaters altered to account for this.

Main busbars (horizontal and vertical)

During the test the main busbars are fed at the rated current, for which the switchgear assembly is designed. They are heated naturally and therefore no resistance of the main bus need be measured. The busbars are shorted at one end and the current is fed from the other through a variable-current injection set at a reduced voltage of 3–10 V, or enough to achieve the rated current. The arrangement saves on power requirement and consum-

Table 14.4 Computation of heat losses for temperature rise test (single-line diagram, Figure 14.1)

Sr. no.	*Component*	*No. of feeders*	*Feeder rating, (I) A*	*Component resistance per pole R mΩ/pole*	*Watt loss (I^2R) at room temperature (32°C) W_r watts*	*Watt loss at operating temperature of 90°C W_o watts*
(A)	**Power circuits**					
1	55 kW DOL feeder, Comprising; 1 No. Switch – 250A 3 Nos. Fuses – 200A 1 No. Relay – 90–50A	1	110	Circuit resistance between I/C and O/G power terminals covering all components and power wiring or metallic links and their contact resistances, including end terminations. By measurement = 0.33	$1 \times 3 \times 110^2 \times 0.33 \times 10^{-3}$ = 11.98	Since $W \propto R$ and $R_{90} = R_{32}\,[1 + \propto_{20}(90 - 32)]$ $\therefore W_o$ at 90°C, $= W_r \cdot [1 + \propto_{20}(90 - 32)]$ $= 11.98\,[1 + 3.93 \times 10^{-3}(58)]$ = 14.71 ($\propto_{20}$ for copper from Table 30.1 $= 3.93 \times 10^{-3}$ per °C)
2	5.5 kW DOL feeders, each comprising 1 No. Switch – 63A 3 Nos. Fuses – 25A 1 No. Contactor – 16A 1 No. Relay – 9 – 14A	2	12	As above = 0.52	$2 \times 3 \times 12^2 \times 0.52 \times 10^{-3}$ = 0.45	$0.45\,[1 + 3.93 \times 10^{-3}\,(58)]$ = 0.55
3	SFU feeder comprising; 1 No. Switch – 63A 3 Nos. Fuses – 32A	1	32	As above = 0.46	$1 \times 3 \times 32^2 \times 0.46 \times 10^{-3}$ = 1.41	$1.41[1 + 3.93 \times 10^{-3}\,(58)]$ = 1.73
	Total loss in power circuits				= 16.99 W	(A)

(Contd)

Table 14.4 *(Contd.)*

(B) Control circuits

1 Component	*55 kW feeders*			*5.5 kW feeders*			
	Qty	*VA*[a]	*Watt loss*	*Qty*	*VA*[a]	*Watt loss*	*63/32A SFU feeders*
Contactor coil	1	85 at 0.3 p.f.	25.5	1	15 at 0.35 p.f.	5.25	
CT	1	7.5^b	7.5	1	5^b	5	
Ammeter	1	5^b	5.0	1	5^b	5	NIL
ON light	1	7^b	7.0	1	7^b	7	
Auxiliary contactor	1	15 at 0.35 p.f.	5.25	–	–	–	
Loss at 40°C W_{40}		Total	50.25		Total	22.25	
(I) loss at 90°C	$W_{90} = W_{40}[1 + \propto_{20} (90 - 40)]$ $= 50.25\ [1 + 3.93 \times 10^{-3}\ (50)]$ $= 60.12$ ($\propto_{20}$ for copper)			$W_{90} = 22.25[1 + 3.93 \times 10^{-3}(50)]$ $= 26.62$ for 2 feeders = 53.24			
2 Control cables, 2.5 mm^2 (copper flexible).	@ 10 m/feeder			@ 5 m/ feeder			NIL
• Cable resistance at 20°C (Table 13.15) Ω/km	7.6			7.6			
• Control circuit current	less than 1A			less than 1A			
∴ Watt-loss at 20°C (For 1A)	$\frac{10}{1000} \times 7.6 = 0.076$			$\frac{5}{1000} \times 7.6 = 0.038$ per feeder			
(II) Watt loss at operating temperature (90°C) $W_{90} = W_{20}\ [1 + \propto_{20}(90 - 20)]$	$1 \times 0.076\ [1 + 3.93 \times 10^{-3}(70)]$ $= 0.097$			$2 \times 0.038\ [1 + 3.93 \times 10^{-3}(70)]$ $= 2 \times 0.048 = 0.096$			
Loss in control circuits (I + II)	60.22			53.34			

Total loss in control circuits = 113.56 W (B)

If the loss in the control cables is small, this can be ignored for a quicker estimation of losses.

(C) Power cables (aluminium) (mm^2)	3×95	3×4	$3^1/_2 \times 25$
• Average length from cable gland to the power terminals (m)	1.5	2.0	2.5
• Cable resistance at 20°C (Table 13.15) Ω/km	0.32	7.54	1.2
∴ Watt loss at 20°C	$1 \times 3 \times 110^2 \times \frac{1.5}{1000} \times 0.32$ $= 17.42$	$2 \times 3 \times 12^2 \times \frac{2}{1000} \times 7.54$ $= 13.03$	$1 \times 3 \times 32^2 \times \frac{2.5}{1000} \times 1.2$ $= 9.22$
Watt loss at operating temperature (90°C) $W_{90} = W_{20}\ [1 + \propto_{20}\ (90 - 20)]$	$17.42\ (1 + 4.03 \times 10^{-3} \times 70)$ $= 22.33$	$13.03(1 + 4.03 \times 10^{-3} \times 70)$ $= 16.7$	$9.22(1 + 4.03 \times 10^{-3} \times 70)$ $= 11.82$
$\propto_{20}$ for aluminium from Table 30.1 $\simeq 4.03 \times 10^{-3}$ per °C			

Total loss in power cables = 50.85 (C)

Total watt losses A + B + C = 181.40 W

∴ Heaters required for 180 W, which may be arranged in the sizes of 3 of 50 W each and 1 of 30 W (or as convenient) and located as shown in Figure 14.2.

---

[a] From manufacturers' catalogues at 40°C

[b] We may consider these at unity p.f.

Table 14.5 Temperature rise limits: for buses, bus connections and other parts of a switchgear assembly

Type of bus connection	*Limit of hottest spot temperature rise above an ambient of 40°C* °C	*Limit of hottest spot total temperature* °C
(A) 1 For busbars and busbar connections of aluminium or copper	50	90
2 For busbars and busbar connections of aluminium or copper silver plated or equivalent	65	105
3 Terminals for external insulated cables	70	110
(B) For parts exposed to contact by a human body		
1 Parts handled by operator		
(i) of metal	15[a]	55
(ii) of insulation	25	65
2 External surfaces, covers		
(i) of metal	30[b]	70
(ii) of insulation	40	80

Note: For details of temperature rise of various parts and materials of an HT switching device refer to IEC 60694.
Based on IEC 60439-1 and 2

[a] Parts that are not frequently handled, may be allowed a higher temperature rise.

[b] Parts that are exposed but need not be touched during a normal operation, may have higher temperature rise by 25°C for metal surfaces and 15°C for insulating surfaces.

ption. If the ratings of the main bus and the sectional bus (vertical bus feeding a group of feeders) are different, as in large switchgear assemblies, then two separate current sources may be used, one to feed the main bus and the other the sectional bus. The sectional bus can now be detached from the main bus as shown in Figure 14.2, and applied with the appropriate diversity factor, as shown in Table 13.4, to simulate the test condition to obtain almost the operating condition. For the purpose of illustration, we consider the single-line diagram of a power distribution circuit shown in Figure 14.1. The general arrangement of its switchgear assembly is illustrated in Figure 14.2.

Locate the RTDs at the likely hot spots, as at the joints of the busbars. Figure 14.2 illustrates the likely locations of the RTDs. The test may be carried out as noted earlier and temperature readings tabulated at 30-minute or 1-hour intervals, whichever is more appropriate. The temperature rise, estimated with the highest temperature recorded by any of the RTDs, would refer to the ambient

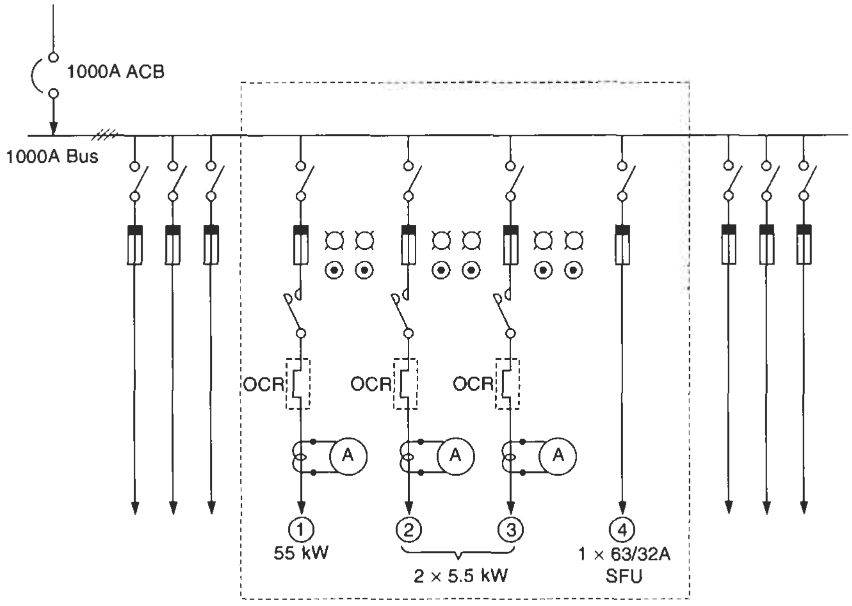

Figure 14.1 Single-line diagram for an assembly under a heat run test

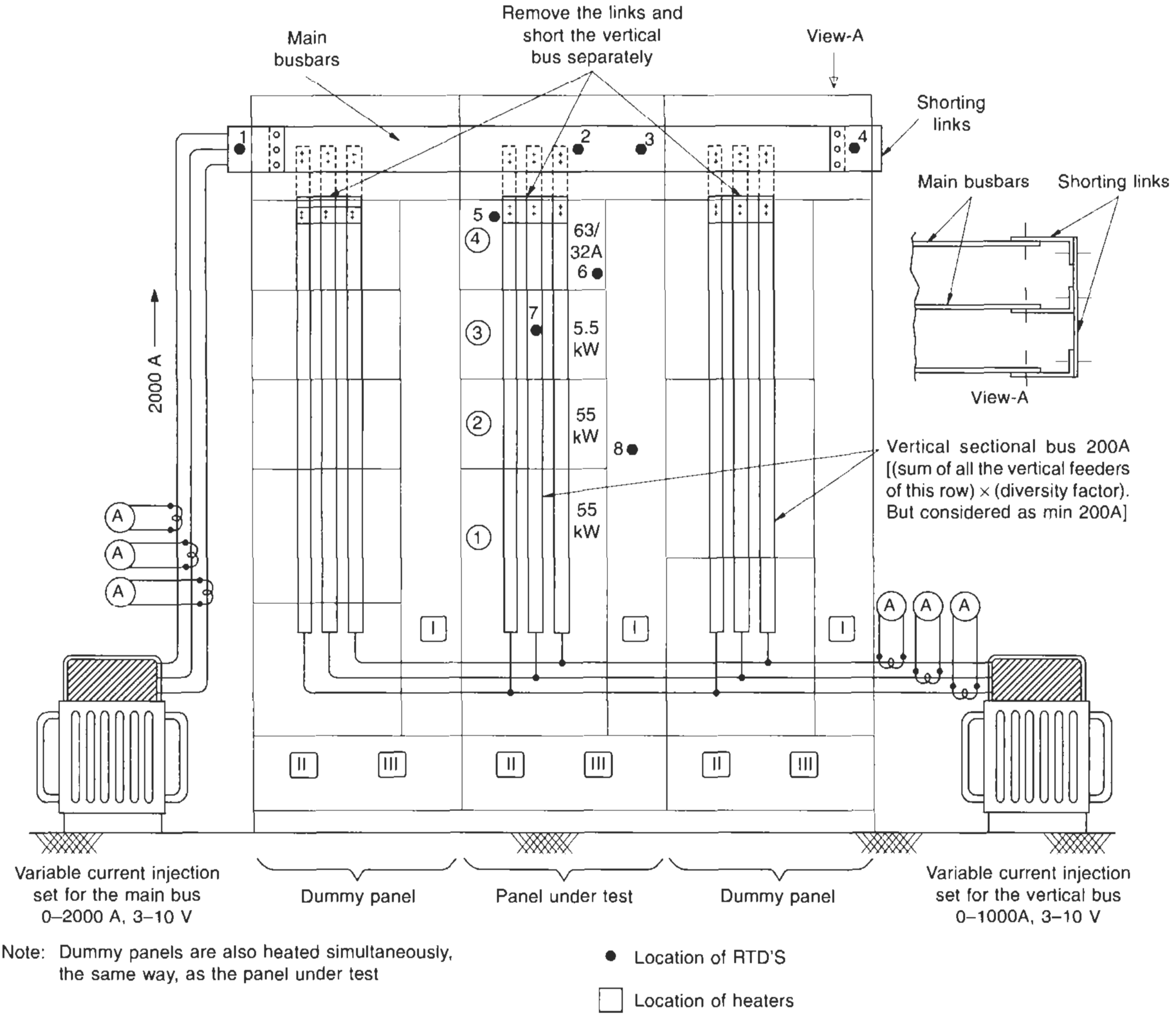

Note: Dummy panels are also heated simultaneously, the same way, as the panel under test

Figure 14.2 Temperature rise test on a switchgear assembly

temperature of the test location and may be corrected to the desired ambient temperature at which the assembly is likely to operate. The temperature thus obtained is the temperature rise that the assembly would attain during continuous operation. The corrected temperature rise must fall within the limits prescribed in Table 14.5.

If θ_r = temperature rise estimated at the test location
θ_o = ambient temperature at the test location
θ_h = highest temperature recorded by any of the RTDs
θ_a = ambient temperature at the place of installation
Then

$$\theta_r = \theta_h - \theta_o$$

and corrected temperature rise = $\theta_r + (\theta_a - \theta_o)$

A successful test will ensure:

1 For insulating materials: the highest temperature rise will not exceed the hot spot temperature rise as recommended in Table 14.6.
2 For busbars and busbar connections: the highest temperature rise will not exceed the hot spot temperature rise as recommended in Table 14.5.

Table 14.6 Temperature limits for insulating materials as used in a switchgear assembly

Class of insulating material	*Limit of hottest spot temperature rise above an ambient of 40°C*	*Limit of hottest spot total temperature °C*
Y	50	90
A	60	100
E	80	120
B	90	130
F	115	155
H	140	180

3 Other parts of the switchgear assembly and the auxiliary components, for which limits have been specified, will not exceed the hot spot temperature rise, as recommended in Table 14.5.

General notes on testing procedure

- The main bus through its entire length is fed with its rated current, while in operation it would carry a diminishing value after every feeder or a sectional bus.
- The sectional bus is fed similarly.
- If a control bus is also used add for its heat loss. A third current source may be required if a temperature rise in this bus is also desired.
- Keep the control circuits energized if possible, to further save on calculations and to obtain more accurate results. In the sample calculations as shown in Table 14.4 we consider this in a de-energized condition for the sake of more clarity.
- Each feeder is considered at its optimum rating, based on the current rating of the motor or the rating of the power fuses in a SFU or FSU feeder while the current may be much less in actual operation.

If the temperature rise, as determined above, exceeds permissible limits it will be desirable to provide extra louvres, a forced cooling arrangement, larger busbars or a change in their configuration whichever is more convenient and easy to implement.

The test conditions as noted above may over-estimate the rise in temperature during actual operation. Some latitude may therefore be considered while analysing the final results if the temperature rise thus estimated exceeds the prescribed limits only marginally.

14.3.6 Verification of short-circuit strength

This test is conducted to verify the suitability of the equipment to withstand a prospective short-circuit current that may develop on a fault. It may also be termed the steady state symmetrical fault current I_{SC} or the short-time (withstand current) rating of the equipment. When the equipment is an interrupting device, it is referred to as its symmetrical breaking current.

It is permissible to test just one panel of a multi panel-assembly so long as the construction of other panels is similar and busbar arrangement and supports are the same. The value of the prospective short-circuit current may be determined from a calibrated oscillogram. The test current in any phase should not vary by more than 10% of the average in the three phases and must be applied for a predetermined time of 1 or 3 seconds. Unless specified otherwise, this should be considered as to be 1 second.

The oscillogram must reveal continuity of the current during the test period. The frequency of the test circuit

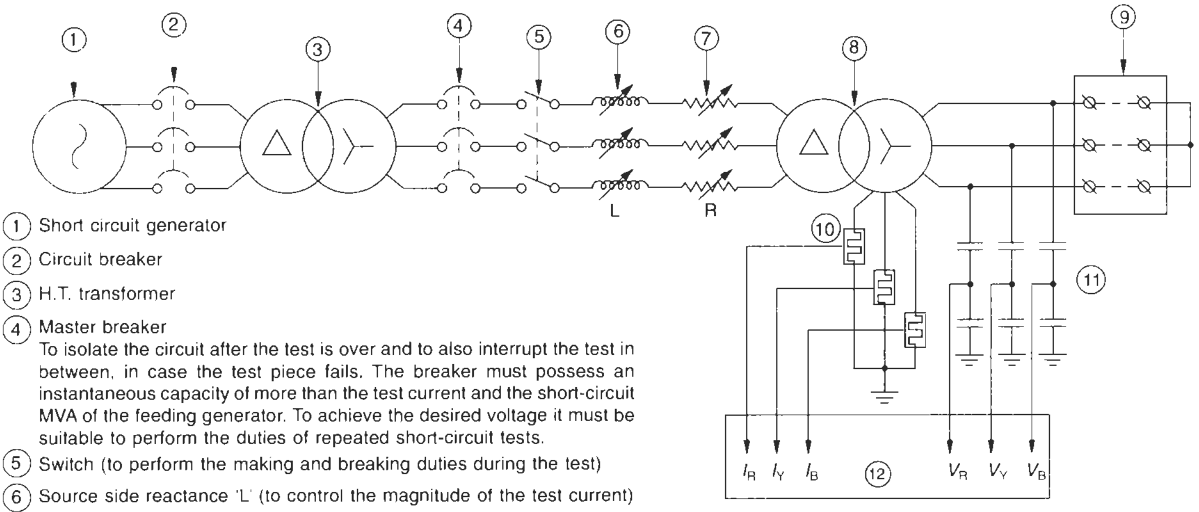

① Short circuit generator

② Circuit breaker

③ H.T. transformer

④ Master breaker
To isolate the circuit after the test is over and to also interrupt the test in between, in case the test piece fails. The breaker must possess an instantaneous capacity of more than the test current and the short-circuit MVA of the feeding generator. To achieve the desired voltage it must be suitable to perform the duties of repeated short-circuit tests.

⑤ Switch (to perform the making and breaking duties during the test)

⑥ Source side reactance 'L' (to control the magnitude of the test current)

⑦ Source side resistance 'R' (to control the p.f. as per the test requirements)

⑧ High current step down transformer

⑨ Test object

⑩ Current shunt

⑪ R–C voltage dividers

⑫ Recording instruments:

EMO :	Electro-magnetic oscillograph, to record power frequency quantities such as short circuit average and peak currents in each phase, voltage across each phase during and after the test, generator voltage and time duration of test, as recorded in Figure 14.4
CRO :	Cathode ray oscillograph, to record voltages of a transient nature. For instance, re-striking voltages (TRVs), whose frequency of oscillations is beyond the response range of EMO.

Figure 14.3 General arrangement of a power circuit to conduct a short-circuit test

can have a tolerance of up to 25% of the rated frequency for LT and 10% for HT assemblies. Figure 14.3 illustrates a general arrangement for such a test.

Inference from the oscillogram

From the oscillogram, shown in Figure 14.4 one can easily determine the average r.m.s. value of the short-circuit current, I_{av}, its duration and the momentary peak current. For easy evaluation, this oscillogram has been divided into ten equal parts (1 to 10) and is redrawn in Figure 14.5 for more clarity. The short-circuit commences at point D_1 and concludes at point A_2, A_1A_2 being the original zero axis. At the instant of short-circuit, the zero axis shifts to B_1A_2. D_1B_1 is the initial d.c. component that decays to zero at A_2 at the conclusion of the test.

$I_0, I_1, \ldots, I_{10}$ etc. are the r.m.s. values of the a.c. components of the asymmetrical fault current at instants 1, 2, … , 10 as indicated. They diminish gradually and reach their steady-state condition about the original axis, A_1A_2, in about three or four cycles of the short-circuit condition (Section 13.4.1(8)).

The values of $I_0, I_1, \ldots, I_{10}$ can be calculated from the d.c. components and the r.m.s. values of the symmetrical a.c. components, $I_{ac0}, I_{ac1}, \ldots, I_{ac10}$ at the instants of 1, 2, …, 10 at which are referred the values $I_0, I_1, \ldots, I_{10}$.

Say, for I_0, if I_{ac0}, is the r.m.s. value of the symmetrical component of the a.c. fault current and I_{dc0} the corresponding d.c. component on a B_1A_2 curve then $I_0 = \sqrt{I_{ac0}^2 + I_{dc0}^2}$ (since I_{ac0} and I_{dc0} are almost 90° apart). The values of $I_1, I_2, \ldots, I_{10}$ can be determined along similar lines. The curve C_1C_2 defines the asymmetrical average fault current I_{av}.

If I_{av} is the average r.m.s. value of the asymmetrical short-circuit current, then by using the Simpson formula, I_{av} can be calculated by using

$$I_{av} = \sqrt{\frac{1}{30}[I_0^2 + 4(I_1^2 + I_3^2 + I_5^2 + I_7^2 + I_9^2) + 2(I_2^2 + I_4^2 + I_6^2 + I_8^2) + I_{10}^2]}$$

This is also known as the asymmetrical breaking current and tends to become the symmetrical r.m.s. value of the fault current I_{sc} after almost four cycles from the instant of fault initiation, as discussed in Section 13.4.1(8).

For more clarity and a better understanding of the oscillogram and also to determine I_{ac0} and I_{dc0} more accurately, a few cycles of the first section of the oscillogram are shown in Figure 14.6. The d.c. component is assumed to decay quickly and approach zero by the instant B_2, i.e. within the first section of the test oscillogram. The asymmetrical fault current envelope C_3C_4 will also approach an almost steady state about its original axis A_1A_2 by B_2. O_1 and O_2 are considered arbitrary instants of current zeros on the asymmetrical current wave.

If I'_{aco} and I''_{aco} are the peak symmetrical a.c. components of the fault current at these instants as noted in Figure 14.6 and I'_{dco} and I''_{dco} are the corresponding d.c. components then

$$\frac{I'_{aco}}{\sqrt{2}} \text{ and } \frac{I''_{aco}}{\sqrt{2}}$$

will represent the symmetrical r.m.s. short-circuit current (or symmetrical breaking current of an interrupting device) at the instants O_1 and O_2 respectively, and

$$\sqrt{\left(\frac{I'_{aco}}{\sqrt{2}}\right)^2 + I'^2_{dco}}$$

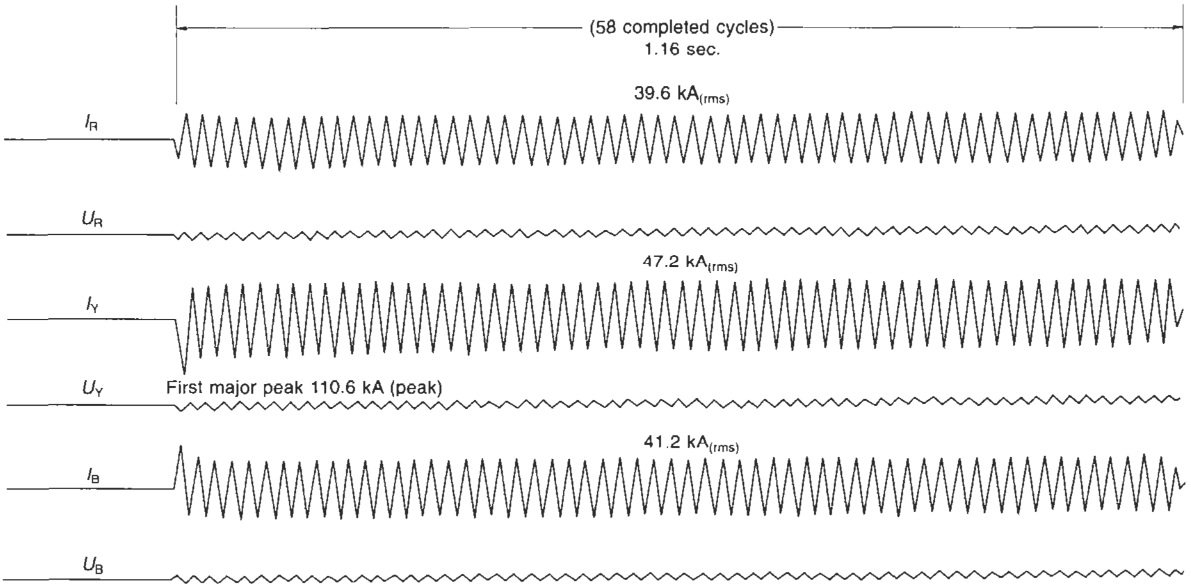

Figure 14.4 Oscillograms of an actual short-circuit test carried out on a power distribution panel (Courtesy: ECS)

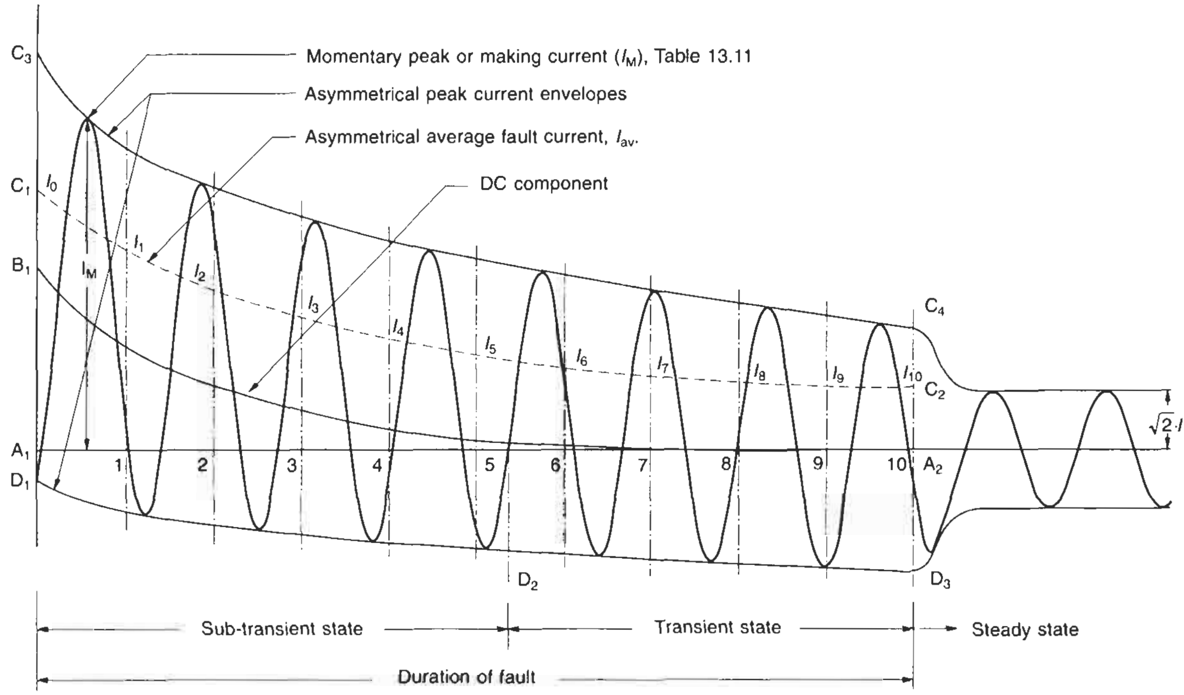

Note The curves C_1 C_2 and C_3 C_4 are considered symmetrical after the first few cycles say 4 to 5. For better clarity, these 4 cycles are redrawn in an enlarged form in Figure 14.6

Figure 14.5 Determining the average r.m.s. value of the short-time current I_{sc} from the oscillogram obtained during a short-circuit test

will represent the asymmetrical r.m.s. short-circuit current (or the asymmetrical breaking current of an interrupting device) at the instants O_1.

Notes

1 The d.c. component, I_{dc}, at any instant should be a minimum of 50% that of the corresponding peak value of the a.c. component of the symmetrical fault current I_{aco}, I_{ac1}, ..., I_{ac10}, i.e. at any instant, during the period of the short-circuit condition, I_{dc} should be $\geq 0.5 \cdot \sqrt{2} \cdot I_{ac}$. Otherwise the asymmetry may be ignored, being insignificant.
2 The peak value of the asymmetrical fault current determined for the first maximum peak may be considered as the momentary peak value of the fault current I_M.
3 The oscillogram also reveals the following vital information for an interrupting device, if used in the circuit, to make or break on fault;

Symmetrical breaking current
This is the steady-state symmetrical fault current, which the faulty circuit may almost achieve in about three or four cycles from commencement of the short-circuit condition at point D_1 (Figure 14.5) and which the interrupting device should be able to break successfully.

R.M.S. asymmetrical breaking current
This is the r.m.s. value of the asymmetrical fault current I_0, I_1, ..., I_{10} that the faulty circuit may generate, i.e.

$$I_{av} = \sqrt{I_{ac}^2 + I_{dc}^2}$$

It will determine the ability of the interrupting device to sustain the asymmetry for the period up to its opening. It may also be referred to as the interrupting duty of the device.

Making current
This is the same as the momentary peak value of the fault current I_M and defines the capability of the interrupting device to make on fault.

Short-circuit generator (Figure 14.3)

Since this equipment is short-circuited repeatedly it is specially braced to withstand repeated voltage transients and is mounted on a resilient base to minimize the mechanical shocks transmitted to the base. If the generator is motor driven it is disconnected just before creating the short-circuit condition, otherwise the generator may have to feed the motor and be subject to stress. The stator has low reactance to give maximum short-circuit output and has two windings per phase as illustrated in Figure 14.7. These are arranged so that they can be connected in series or parallel, in star or delta etc., to provide four basic three-phase voltage systems as follows:

	Stator connections	*Nominal voltage*
1	Parallel delta	6.35 kV
2	Parallel star	$\sqrt{3} \times 6.35 = 11.0$ kV
3	Series delta	12.7 kV
4	Series star	$\sqrt{3} \times 12.7 = 22$ kV

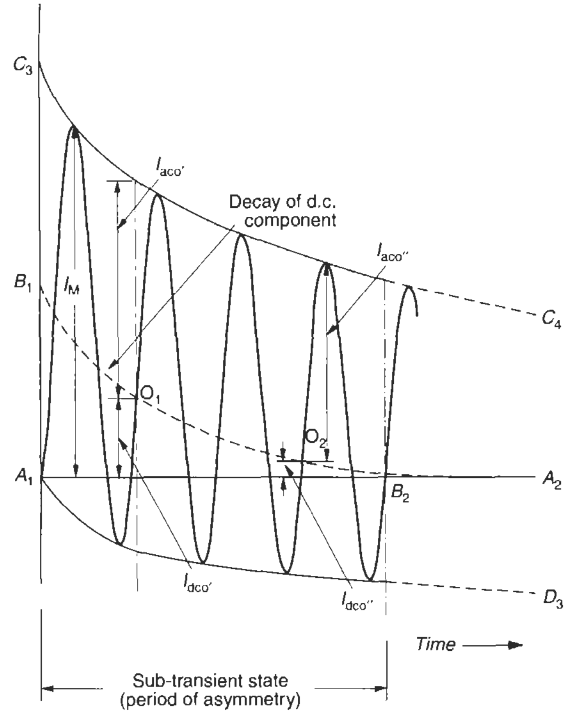

Figure 14.6 Illustration of asymmetry during a short-circuit

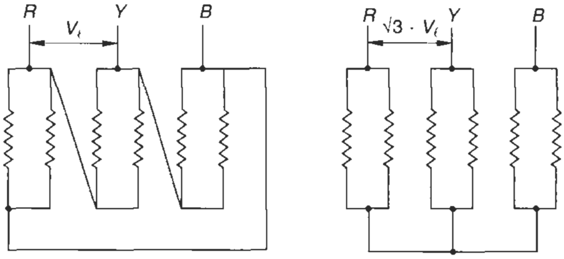

(i) Parallel delta

(ii) Parallel star

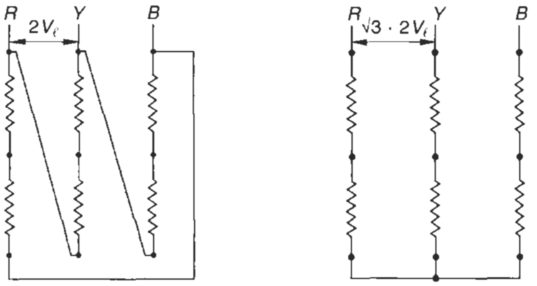

(iii) Series delta

(iv) Series star

Figure 14.7 Arrangements of windings in a test generator

Testing of the main circuits (with short-circuit protective devices)

- **For a switching device** (which has not been previously tested for a short-circuit test). This should be closed and held in the normal service position. The test voltage (that would generate the required level of fault current) may be applied on one set of terminals, the other terminals being shorted. The test may be continued until the short-circuit device operates to clear the fault, but in no case for less than 10 cycles. In LT assemblies the point where the short-circuit is created should be 2 ± 0.4 m from the nearest point of supply.
- **For a switching device having no protection** (e.g. an Isolator). The required test current may be applied for the necessary duration (1 or 3 seconds) and the dynamic and thermal strengths should be verified.
- **For the main busbars**
  - In LT assemblies, when the test is conducted on busbars, the length of busbars should be minimum 2 m. If it is less than this, short-circuit may be created at the ends of the busbars.
  - If the busbars consist of more than one section in cross-section, or different distances between the supports or the busbars, the test may be conducted separately on each section.
- **Test results**
  - A successful test should reveal no undue deformation. Slight deformation of busbars is acceptable provided that the clearance and the creepage distances, as given in Tables 28.4 and 28.5, are maintained. The insulation of the conductors and the mounting supports should show no sign of deterioration. The degree of protection will not be impaired.
  - For withdrawable parts, such as a draw-out breaker or a draw-out chassis, proper movement of the movable parts and making of the contacts should be ensured. To verify this requirement, the chassis may be moved in and out for at least 50 times.
  - Clearance and creepage distances must be maintained in the service, test and isolated positions.

14.3.7 Verification of momentary peak or dynamic current

This test is carried out to verify the mechanical fitness of the buses, their interconnections, other current-carrying parts and the mounting structure to withstand the electrodynamic forces developed during a fault. It is measured by the first major peak (I_M) of the oscillogram as discussed above and is obtained during the course of the short-time rating test (Section 14.3.6). The value obtained will not be less than those specified in Table 13.11. For more details see Section. 13.4.1(8). The test procedure and the test current are generally the same as for the short-time rating test, except that when the test is being conducted exclusively to determine the momentary peak current, the duration must not be less than 0.3 second, i.e. 15 cycles for a 50 Hz system as in IEC 60694. Referring to the oscillogram of Figure 14.5, the momentary peak value of the fault current of the first major loop, after commencement of the fault condition at instant D_1, is indicated as I_M. Referring to the original oscillogram, (Figure 14.4), it occurs in phase *Y*.

Example 14.1

For more clarity we have reproduced in Figure 14.3 an actual test circuit and in Figure 14.4, the oscillograms of the test results of a short-circuit test successfully carried out on an LT power distribution panel (Figure 14.8) for a system fault level of 50 kA for 1 second, at CPRI (Central Power Research Institute). From a study of these oscillograms (Figure 14.4), we can infer the following test results:

1 No. of completed test cycles = 58

$\therefore$ duration of test for a 50 Hz system $= \frac{58}{50} = 1.16$ second

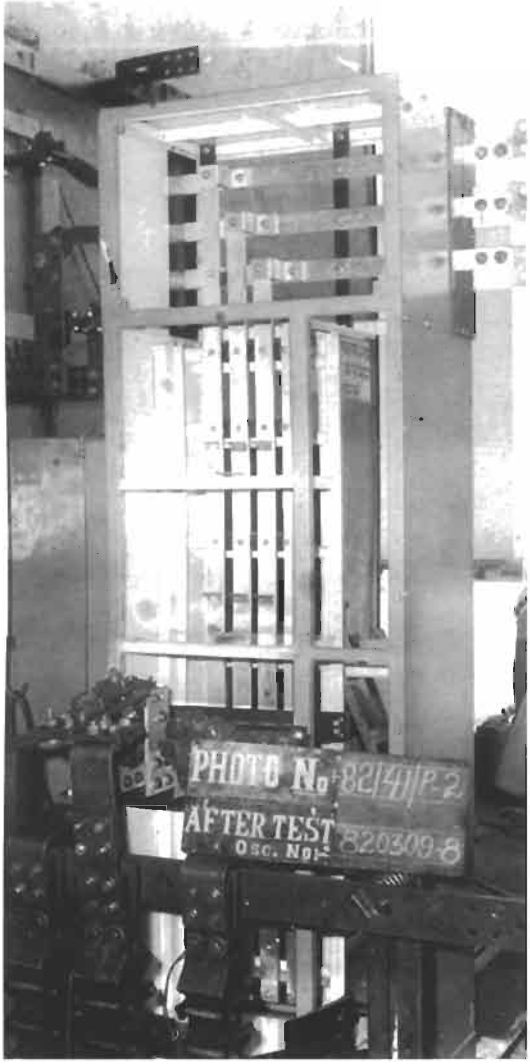

Figure 14.8 A motor control centre (MCC) after short-circuit test at CPRI

2 Test current $I_R = 39.6$ kA
$I_Y = 47.2$ kA
$I_B = 41.2$ kA

Highest of the above exists in phase *Y* at 47.2 kA
$\therefore$ equivalent current rating of the equipment under test for

1 second $= 47.2 \cdot \sqrt{1.16}$

$\left(\text{since } I_1^2 \cdot t_1 = I_2^2 \cdot t_2, \therefore I_2 = I_1 \cdot \sqrt{\frac{t_1}{t_2}}\right)$

$= 47.2 \times 1.077$

$= 50.836$ kA

3 The maximum peak current also appears in phase *Y* and measures at 110.6 kA at the first loop of the current wave. This loop is 110.6/50, i.e. 2.21 times the test current and satisfies the requirement of Table 13.11.

Analysis of the test results

As discussed above we establish two basic parameters from a short-time withstand test, i.e.

1 Thermal capability of the equipment under test, i.e. I_{sc} and its duration
2 Mechanical compatibility through the peak making current, I_M, as in Table 13.11.

Before creating a fault condition, to obtain the required I_{SC} the impedance of the test circuit is adjusted so that the required fault current is obtained in all the phases on creating a short-circuit. To provide the required thermal effect $(I_{sc}^2 \cdot t)$, the duration of test, *t*, is then adjusted accor-dingly. The relevant standards therefore stipulate that the test current may be higher or lower than required and can be compensated by adjusting its duration, *t*.

However, due to the minor variations in the phase impedances, all the phases may not be subjected to identical severity of faults. For instance, in the above test each phase has recorded a different fault current. To evaluate the fault level from these test data, the general practice has been to consider the phase that has recorded the highest fault current as the base, which may occur in any of the phases. In the above test, it has occurred in phase Y. For this fault current, the test duration is adjusted to achieve the required severity of fault in terms of thermal effect ($50^2 \times 1$ in the above case).

Some users/consultants, however, are of the opinion that by this method the other phases are not subjected to the same severity. Accordingly, they prefer to consider the phase that is subjected to the least fault current as the base. Accordingly, the test duration should be adjusted for this phase. In the above case, the minimum severity has occurred in phase *R*, with only 39.6 kA. According to this philosophy the test duration should be enhanced to

$$\frac{50^2 \times 1}{(39.6)^2} \text{ or } 1.59 \text{ s}$$

as against 1.16 s in the above test.

Even then it is essential, that the peak making current, I_M, of the required magnitude is achieved during the test. This is one parameter that cannot be established by hypothesis. It is therefore imperative that the minimum peak current according to the multiplying factor, shown in Table 13.11, is obtained during the course of the test itself, for example a minimum of 2.1 × 50, i.e. 105 kA in the above test. The multiplying factor will correspond to the specified fault current, (50 kA) and not the test current, e.g. 47 kA in the above test. If during the course of the test, the peak making current is less than this, the test will be considered invalid.

14.3.8 Verification of the protective circuits

All protective circuits must be checked for continuity and the operational and sequential requirements, if any, in addition to the following:

- Checking for the grounding of instrument transformers by means of a low-voltage source (10 V or so) using a bell, buzzer or a light.
- Control wiring insulation test, as in Table 14.3.
- Polarity test: to check the connections through the potential transformer to ensure that the connections between the transformer and the meters or relays have a correct relative polarity. Otherwise the meters would show erratic readings, while the relays would transmit wrong signals. This test may also be conducted with a low-voltage source of 10 V by observing the deflection of the instruments.

14.3.9 Verification of clearance and creepage distances

The clearances may be verified as in Table 28.4, whereas for creepages Table 28.5 may be followed.

14.3.10 Verification of degree of protection

Enclosure test

The types and degrees of enclosure protection are generally the same as defined for motors in Section 1.15, Tables 1.10 and 1.11. The testing requirements and methods of carrying out such tests are also almost the same as for motors, and as discussed in Section 11.5.3.

Weatherproof test

This test is applicable to all outdoor metal-enclosed switchgear and controlgear assemblies, as in IEC 60298, IEC 60694 and ANSI C-37/20C. The enclosure to be tested should be complete in all respects including its mounts, bushings (for HT switchgear assemblies, 1 kV and above) and wiring. One or more vertical units can be tested simultaneously as may be convenient, but not more than 3 m panel width can be tested at a time. For a multiple unit switchboard, however, at least two vertical units should be tested together to check the joints between the units.

Procedure
All surfaces of the enclosure must be tested uniformly for 5 minutes each. The water will be impinged on the surface of the enclosure from a distance of not more than 3 m from all sides through a square shaped nozzle of a capacity of 30 ℓ/min ±10% at a pressure of 46 N/cm^2 ±10% and a spray angle of 60–80°. (See Figure 14.9). The rate at which the water is impinged on the surface under test should be almost 5 mm/minute. Standard nozzle designs are also available which can ensure the desired quantity of water at a pressure of 46 N/cm^2 ± 10%. Refer to IEC 60298.

For a uniform spray on the entire test surface more nozzles may be employed. Normally, surfaces of up to a width of 3 m may be tested at a time. For larger widths the test may be conducted in two steps. Normally, only one vertical surface is tested at a time. Besides the vertical sections, the test will also be conducted on:

- The roof surface, from nozzles located at a suitable height
- The floor outside the enclosure for a distance up to 1 m in front of the switchgear assembly, the assembly being in its normal position.

Figure 14.9 illustrates the above requirements.

Test results
The test may be considered successful if

- No water droplets can be observed on the insulation of the main and auxiliary circuits
- There are no water droplets on the electrical components or mechanism of the equipment
- There is no significant accumulation of water on any part of the structure or other non-insulating parts. This requirement is to minimize corrosion.

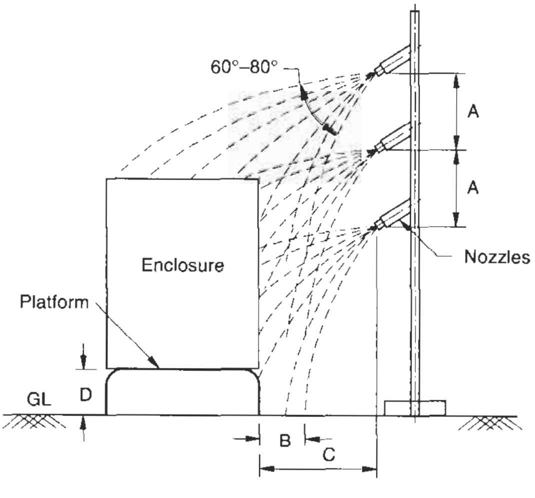

A	≃ 2.0 m
B	≃ 1.0 m
C	≃ 2.5 to 3.0 m
D	Minimum height above floor level

Figure 14.9 Arrangement for weatherproofing test

14.3.11 Verification of mechanical operation (LT and HT)

This test is conducted to establish the satisfactory functioning of mechanical parts, such as switching devices and their interlocks, shutter assembly, draw-out mechanisms and interchangeability between identical draw-out modules. A brief procedure to test these features is as follows.

Switching devices

These should be operated 50 times and removable parts inserted and withdrawn 25 times each.

Mechanical interlocks

The interlocks should be set in the intended position to prevent operation of the switching device and insertion or withdrawal of the removable parts. Fifty attempts must be made to operate the switching device and removable parts inserted and withdrawn 25 times each.

The test may be considered successful if the operations of the interrupting mechanism, the interlocks and other mechanical features after the test are found satisfactory.

14.4 Procedure for routine tests

The tests against step numbers 1, 2 and 3 in Section 14.2.2 are of a general nature and no test procedure is prescribed. The rest are similar to the tests covered under type tests. The procedures of tests and requirements of test results will remain the same as discussed earlier.

14.5 Procedure for field tests

The tests against step numbers 1, 2 and 3 are of general nature (see Section 14.2.4) and no test procedure is laid down for them.

4. Verification of insulation resistance or measurement of the leakage current

The purpose of this test is to check for proper insulation of all the insulated live parts and components and to ensure protection of a human body against electrical shocks while the equipment is energized and is in operation. The test detects weak insulation, if any, and this must be rectified before putting the equipment into service.

This test should be conducted both before and after the HV test if this test is to be carried out. The test before the HV test ensure the quality of insulation and the test after the HV test checks that this has not deteriorated after the HV test. If the insulation resistance is found to be lower each circuit and component must be checked separately to identify the weak area and corrective steps taken to improve the resistance to the required level. The test can be conducted in two ways.

Insulation resistance method

The insulation resistance can be checked with the help of an appropriate megger (MΩ-meter), as recommended by IS 10118-3, and shown in Table 14.7. According to this, for an LT system, an insulation resistance of 1 MΩ with a 1 kV megger for a completed switchboard, irrespective of the number of outgoing circuits, is considered to be safe. With this insulation resistance, the switchboard can be put to an HV test or actual use. The values of insulation resistances for higher system voltages and the recommended rating of megger are indicated in Table 14.7.

IEC 60439-1 recommends the minimum insulation resistance for an LT system to be 1 kΩ/V per circuit referred to the rated voltage to the ground.

Leakage current method

The leakage current is measured as in IEC 60298. This method is generally applicable to an HT system by applying the full rated voltage between the insulating surface, say, between a phase and the ground. The leakage current thus measured should not exceed 0.5 mA.

Illustration

1 Referring to Table 14.7, the recommended insulation value will ensure the following leakage current for an LT system:

System voltage – say, 415 V

Insulation resistance = 1 MΩ = $10^6\ \Omega$

$$\therefore \text{Maximum leakage current} = \frac{415}{10^6}\text{A}$$
$$= 0.415 \text{ mA}$$

If the system had been 660 V, this current would exceed 0.5 mA, which is permissible for an LT system.

2 For an 11 kV system, the recommended insulation resistance according to the same table = 100 MΩ = $100 \times 10^6\ \Omega$

$$\therefore \text{Maximum leakage current} = \frac{11 \times 10^3}{100 \times 10^6}\text{ A}$$
$$= 0.11 \text{ mA}$$

and for 33 kV = 0.33 mA

Table 14.7 Insulation resistance for different voltage systems

System voltage	*Minimum insulation resistance MΩ*	*Type of megger kV(d.c.)*
1 Auxiliary and control circuits (all secondary wiring circuits)	1 for one or more circuits	Manual, 0.5
2 For a completed switchboard of up to 1000 V with a number of outgoing circuits	1	Manual, 1.0
3 Above 1000 V and up to and including 33 kV	100	Motorized, min. 2.5
4 Above 33 kV	1000	Motorized, min. 2.5

As in IS 10118-3

The values thus shown in Table 14.7 take cognisance of the recommendations of IEC 60298 to maintain the leakage current at less than 0.5 mA for all HT systems.

The dielectric test may be limited to a power frequency voltage withstand test. This test is considered neither necessary nor advisable at site if already conducted at the manufacturer's works unless there is a major modification or repairs at site in the existing switchgear assembly. Repeated application of a high voltage may degrade the properties of the insulation system used. If such a test becomes necessary at site, it may be carried out at a reduced test voltage of 85% for LT systems as in IEC 60439-1 and at 80% of the test values for HT systems as prescribed in note 2 of Table 32.1(a) as in IEC 60298, for series I voltage systems or at 75% as prescribed in note 2 of Table 14.2 for series II voltage systems, as in ANSI C 37.20C.

When the required test voltage is not available at site, the reduced voltage power frequency withstand test may be carried out at still lower test voltages, depending upon the voltage availability at site. Then the duration of the test must be increased as shown in Table 14.8, and IS 10118-3 and BS 159.

In this case also verification of insulation resistance or the measurement of leakage current will be carried out before and after the HV test.

Table 14.8 Duration for dielectric test at reduced test voltages

Rated test voltage %	*Test duration in minutes*
100	1
83.5	2
75	3
70	4
66.6	5
60	10
57.7	15

14.6 An introduction to earthquake engineering and testing methods

The consequences of an earthquake on life and property have caused increasing concern among scientists, engineers and educational institutions. All are becoming more conscious about preventive measures for buildings and critical installations against possible earthquakes to mitigate, if not eliminate, their devastating effects. It is becoming common practice to conduct seismic studies on a region where a large and/or critical project is to be located before commencing work and locating the more important buildings in seismically safer areas. Buildings, other structures and important machines are designed to withstand earthquakes. Analytical methods and laboratory test facilities have also been developed to demonstrate the suitability of structures to withstand seismic events.

Additional information on newer aspects on the behaviour of the earth during an earthquake has been obtained on a regular basis. This has been possible through seismographs and accelerographs installed at the various strategic locations throughout the world (see Section 14.6.2). Availability of new information on aspects on the behaviour of the earth's body is making it possible to update and improve the above test methods and facilities. With such information, it is also hoped that our scientists may soon be able to predict an earthquake, its intensity and location well in advance.

The likely 'responses' of buildings, structures and installations to such events are now available. These help us to study earthquakes more closely and their effects and enable us to take more authentic and appropriate preventive measures at the design stage. We offer an introduction to this subject with a view to make the students and the engineers more conversant with and aware of these geological phenomena and to be more concerned about safety for life and property. A few examples may be houses, buildings, hospitals, industrial plants, power generating and distributing systems, dams, bridges and handling of hazardous materials. These and similar systems should be given constructional and design considerations to make them reasonably safe against such effects. In further discussions we consider only the secondary systems that are supported on the primary system and consist mainly of the electrical and mechanical machines, devices and components. The primary systems, which include houses, buildings and main structures, (columns, beams, trusses, floors, walls), dams and bridges etc., fall within the purview of civil and structural engineering and are not discussed here.

Our present discussions relate only to the laboratory testing of safety-related secondary systems, as are employed in critical areas such as areas of emergency power supply and reactor power control supply etc. of a nuclear power plant (NPP) according to IEEE 344 and IEC 60980. There are other codes also but IEEE 344 is referred to more commonly. Basically, all such codes are meant for an NPP but they can be applied to other critical applications or installations that are prone to earthquakes.

It should be noted in subsequent discussion that the design of structures and foundations for machines and equipment play a vital role in absorbing or magnifying seismic effects. A proper design consideration in such areas at the initial stage can save the primary (and, in all probability the secondary) systems from such effects to a large extent. Testing may be essential only for the critical equipment, such as being used in the critical areas of an NPP or similar, more critical installations.

14.6.1 Seismic disturbances

Random vibrations, such as those caused by an earthquake, cause shocks and ground movements and are termed seismic disturbances. Shocks and turbulence caused by a heavy sea, landslides and volcanic eruptions are also examples of shocks that may cause vibrations and result in tremors, not necessarily earthquakes. Nevertheless, they may require design considerations similar to those for an earthquake, depending upon the application (e.g. naval applications, hydro projects, dams and bridges), and their vulnerability to such effects. Our present discussions relate to shocks and vibrations caused by an earthquakes and laboratory testing of equipment mounted on primary systems against such effects, particularly those required for critical areas of an NPP.

Causes of seismic disturbances

Scientists suggest different theories for the causes of an earthquake. One of many such theories is the Elastic Rebound Theory. This suggests that with the evolution of the earth, several tectonic processes have been taking place within it. These processes have caused severe deformations in the crust and have resulted in the formation of ocean basins and mountains. These impose elastic strains on the earth's crust. These strains build up with the passage of time, and eventually they overcome the resilience of the earth's crust and result in its rupture. The rebound of the ruptured crust causes an earthquake. Geologists and seismologists have explained this theory more comprehen-sively through the Plate Tectonic Theory which can be briefly explained as follows.

The outer shell of the earth, consisting of the upper mantle and the crust (Figure 14.10), is formed of a number of rigid plates. These plates are 20 in number and are shown in Figure 14.11. Of these, six or seven are major plates, as can be seen in the map. The edges of these plates define their boundaries and the arrows indicate the direction of their movement. These plates contain the continents, oceans and mountains. They almost float on the partially molten rock and metal of the mantle. The outer shell, known as the lithosphere, is about 70 to 150 km thick. It has already moved great distances below the earth's surface, ever since the earth was formed and is believed to be in slow and continuous motion all the time. The plates slide on the molten mantle and move about 10 to 100 mm a year in the direction shown by the arrows. The movement of plates is believed to be the cause of continental drifts, the formation of ocean basins and mountains and also the consequent earthquakes and volcanic eruptions.

The movement of these plates carries with it continents, ocean basins and mountains. Scientists believe that convection currents are generated as a result of great heat within the earth, as illustrated in Figure 14.10. Below the crust, the hot rocks and metal in liquid form rise to the crust, cool and sink into the mantle causing a turbulence through heat convection. The hot rocks become hardened at the surface of the mantle and push the crust which is part of the hug plates that are afloat the mantle. This movement of plates can cause the following:

1 When the plates move away from each other, the molten rock from the mantle fills the gaps between them to form ocean basins.
2 While moving away from one plate, they will be moving closer to another and may collide. One plate may pile up over the other and form mountains.
3 If the plates pull down, they would sink into the mantle and melt to form ocean basins. Some of the molten rock of these plates may travel to the earth's surface through the crevice so formed due to heat convection and cause a volcano.

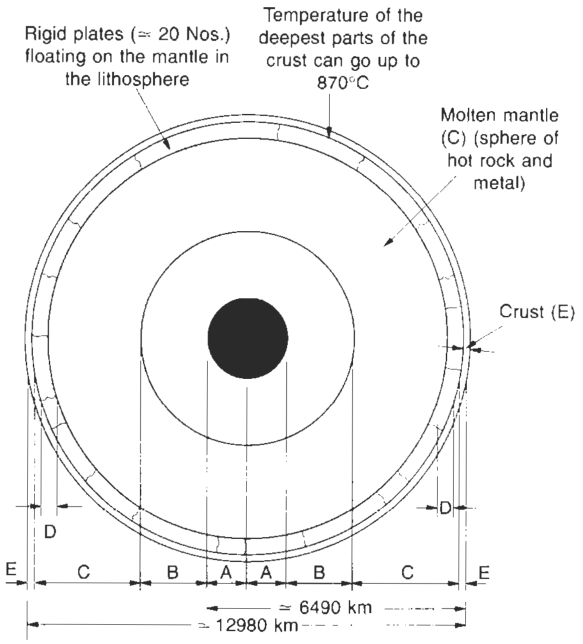

Section of the earth body	Name of the section	Approx. thickness	Temperature	
			Outer part	Inner part
A	Inner core	1300 km	← up to 5000°C →	
B	Outer core	2250 km	up to 2200°C	up to 5000°C
C	Molten core	2900 km	up to 870°C	up to 2200°C
D	Lithosphere	70 km to 150 km	← 870°C →	
E	Crust	8 km (under the oceans) to 40 km (under the continents)	← Below the crust → up to 870°C	

Figure 14.10 Construction of the earth

4 When the plates slide past each other, they may cause stresses at the edges of the crust. The stresses may build up and at some stage exceed the resilience of the earth's crust and cause a fault, i.e., cause the crust to rupture and shift. When this occurs, it causes an earthquake in the form of violent motion of the earth's surface and/or large sea waves. Major earthquakes occur because of this phenomenon.

Magnitude and quantum of energy released

The magnitude of shocks and vibrations caused by an earthquake is the measure of energy released (E) at the focal point in the form of seismic waves. It is measured on a Richter scale. An American seismologist called

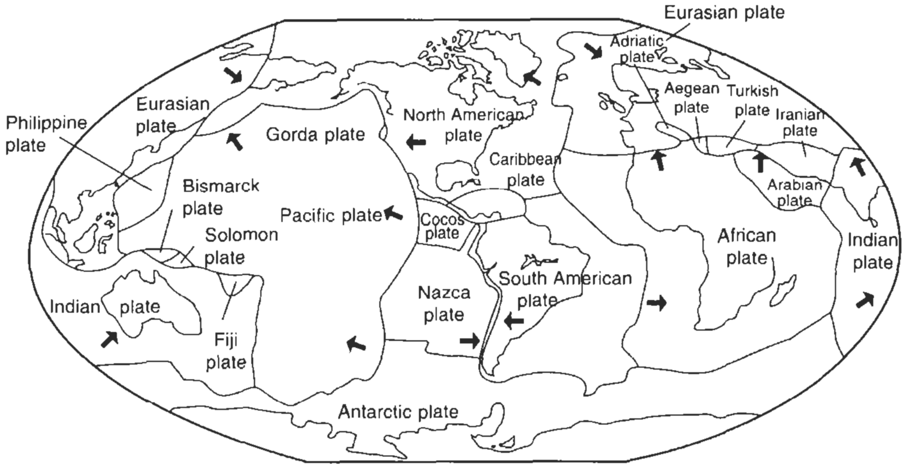

Figure 14.11 Map showing tectonic plates and their boundaries. The arrows indicate the direction of their movements (Courtesy: World Book Encyclopaedia)

Charles Richter suggested that the magnitude of an earthquake can be expressed by

$M = \log A$

where

M = magnitude of the earthquake

A = maximum amplitude, as recorded by the Wood Anderson seismograph in microns at a distance of 100 km from the epicentre.

Since the distance of the instrument from the epicentre will usually not be exactly 100 km, a distance correction must be applied to obtain the magnitude of the earthquake, defined as, $M = \log A - \log A_0$. Distance correction curves between epicentral distance of the seismograph versus $\log A_0$ (which are also sometimes referred to as attenuation curves) are used for this purpose. One standard attenuation curve is shown in Figure 14.12(a).

This definition of the magnitude of earthquake is used for the records of Wood Anderson type torsion seismograph. This has a dampening equal to 80% of the critical natural, period of 0.8 second and a magnification of 2800.

The value of M is determined from seismograph records at different locations and a mean value is obtained to define the magnitude of the earthquake. The minimum value of M which may cause appreciable damage is considered to be about 5. The extent of damage caused by a higher M will depend upon the depth of focus, the distance and the soil stratification. Generally, an earthquake can have a focus varying from 5 to 150 km from the earth's surface. It is generally seen that an earthquake of $M = 5$ may be felt up to a radius of 150 km and can cause substantial damage within a radius of up to 8 km while an earthquake of $M = 7$ may be felt up to 400 km and can cause damage up to a radius of 80 km. An $M = 8$ may be felt up to 800 km and can cause damage up to a radius of 250 km. At Koyna (India), for instance, an earthquake having $M = 6.5$ was felt up to a radius of 400 km and caused destruction up to 60 km or so*. The energy thus released is considerable and can be gauged by its magnitude as shown in Table 14.9.

To obtain an idea of the energy that may be released and the destruction that it can cause, one may compare it with the energy of 8×10^{20} ergs released during the atomic explosion at Hiroshima, Japan, in 1945. This is equivalent to an earthquake of $M \simeq 6.33$. The extent of destruction may be equivalent to an explosion of 10 such bombs if M is 7.0 and many times more at yet higher magnitudes.

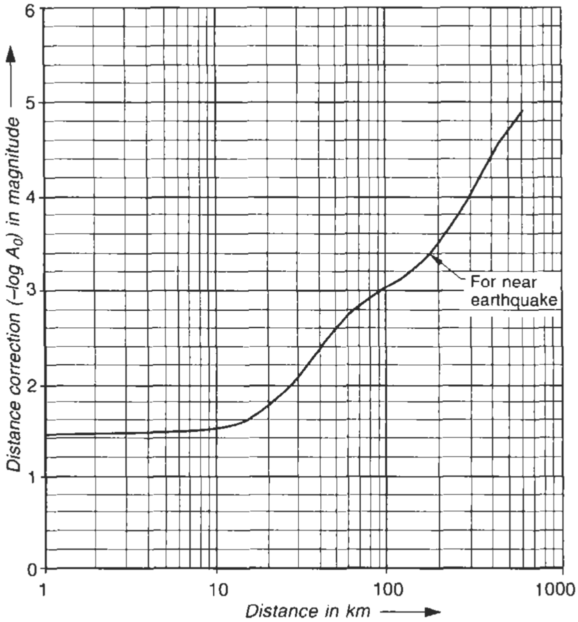

Note Amplitude recorded by Wood Anderson Seismograph '*A*' is in mm.

Figure 14.12(a) Distance correction curve for determining the magnitude of an earthquake

---

*The recent earthquake (2001) with its epicentre at Bhuj (India) was felt upto > 1000 km and caused destruction upto > 400 km. It was measured as M = 8.1 and lasted for about 45–50 seconds.

Table 14.9 Likely energy released at different magnitudes of an earthquake

M	5.0	6.0	6.5	7.0	7.5	8.0
$E(10^{20}$ ergs[a])	0.08	2.5	14.1	80	446	2500

[a] An erg is the unit of work in the cgs system and is equal to the energy required by a force of 1 dyne to move an object 1 cm (1 erg = 10^{-7} joule).

The intensity of an earthquake is a subjective assessment of its effects on the primary systems and inhabitants in surrounding areas and is measured on the Mercalli scale. As noted above, this decreases with distance from the epicentre while the magnitude remains the same. For details refer to DD ENV 1998. Generally, the magnitude and intensity of an earthquake at a location are interrelated.

The energy so released propagates in the form of waves and travels through the stratification of the earth's crust in all directions, longitudinal (X axis), transverse (Y axis) and vertical (Z axis) at the same instant, with varying magnitudes subjecting to vibrations whatever stands in its way on the earth's surface, such as buildings and trees etc. These waves are recorded in the form of irregular broad bands, i.e., multi-frequency waveforms, composed of many sine waves of different frequencies, similar to a harmonic waveform, discussed in Section 23.5.2 and as shown in Figure 23.7. It is known as the time history of an earthquake. The normal practice to describe the motion of an earthquake for a particular location, based on seismic studies and data obtained for and from nearby areas, is in the form of a response spectrum (RS), as discussed later.

Duration of an earthquake

An earthquake may last for 4–6 seconds only for M = 5.5 or less and for over 40 seconds for $M > 7.5$. The greater the magnitude, longer will be the duration. An earthquake of $M \geq 6$, for instance, may last for 15–30 seconds and produce a maximum horizontal ground acceleration of the order of 0.1 g to 0.6 g (98 cm/s^2 to 590 cm/s^2) and higher, inflicting maximum damage in the first 5–10 seconds only, and a frequency band between 1 and 33 Hz (IEEE 344).

Figure 14.12(b) represents an actual time history (accelerogram) of the earthquake that occurred in Chamoli, India, on 29 March 1999. It had a peak ground acceleration of nearly 0.15 g and a predominant frequency of about 2 Hz.

It is also accepted that after such an event, the ruptured earth surfaces may try to settle down again. It is possible that during the course of such a realignment there may still remain pockets of energy between the two plates until they finally settle. These may develop into releases of stresses once again, leading to occasional tremors or earthquakes even for several days after a major earthquake or volcanic eruption. The earthquakes in Turkey are examples where two equally devastating earthquakes occurred between September and November 1999.

14.6.2 Recording an earthquake

This is carried out with the help of an instrument known as a seismograph which amplifies and records small movements of the earth's surface and helps to identify the epicentre and focal depth and determines the magnitude of an earthquake.

More than a thousand earthquakes with a magnitude of at least 2 (corresponding ground acceleration, < 0.01 g to 0.02 g) occur daily. But earthquakes less than $M = 5$ are considered minor, as they are generally harmless. Earthquakes of the same magnitude may cause varying amounts of damage at different locations, depending upon the soil stratification and design considerations of the primary systems. Conventional seismograph are not suitable for recording major ground movements and go off-scale (and sometimes are even damaged) when severe earthquakes occur in their vicinity. For recording significant ground movements, strong motion accelerographs are used. Records of accelerographs are called accelerograms. They are basic requirements for seismic analysis, to design earthquake-resistant structures and buildings and for other engineering applications. Large numbers of accelerograph stations have been established in vulnerable locations throughout the world to record seismic waves for further research and to take preventive measures by improving design practices. Geologists and scientists make use of these data to determine the magnitude of an earthquake and analyse the source mechanism to further their quest to predict an earthquake more accurately, while design engineers use them for developing earthquake-resistant systems, structures and equipment etc. So far these records have proved insufficient to provide required forecasts about an earthquake's location, time of occurrence and magnitude. Nevertheless, with continued efforts in this direction, it is hoped that one day it will be possible to predict an earthquake more accurately.

Response spectrum (RS)

A response spectrum (RS) is analytically determined by calculating the peak response (also called the spectral response) of a linear single degree of freedom system with different natural periods and dampening for a given acceleration time history of ground movements recorded during an earthquake. It forms a part of seismic studies carried out for a particular area, and provides information about far responses of different types of structures during an earthquake. It takes cognisance of the fact that an earthquake can be expressed indirectly in the form of a response spectrum. This spectrum is the peak response of a linear single degree of freedom system on the occurrence of an earthquake, as a function of its natural frequency (periods) for different dampening. They are in the shape of a curve, natural frequency or natural period versus peak amplitude of vibrations of the system, as illustrated in Figure 14.13. They have a broad band as noted later and can be expressed in any of the following forms for different dampening:

1 Ground displacement response spectrum in terms of spectral displacement versus natural period of oscillations (Figure 14.14).
2 Ground velocity response spectrum in terms of spectral velocity versus natural period of oscillations (Figure 14.15).

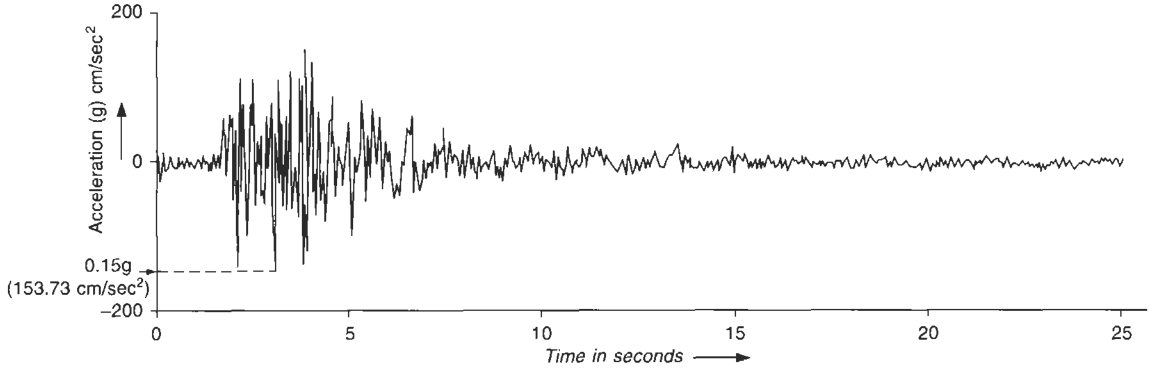

Peak ground acceleration ≈ 0.15 g
Predominant frequency* ≈ 2 Hz

*This can be determined by drawing a Fourier spectrum, which would identify the fundamental frequencies that build up the multi-frequency spectrum.

(a) Acceleration

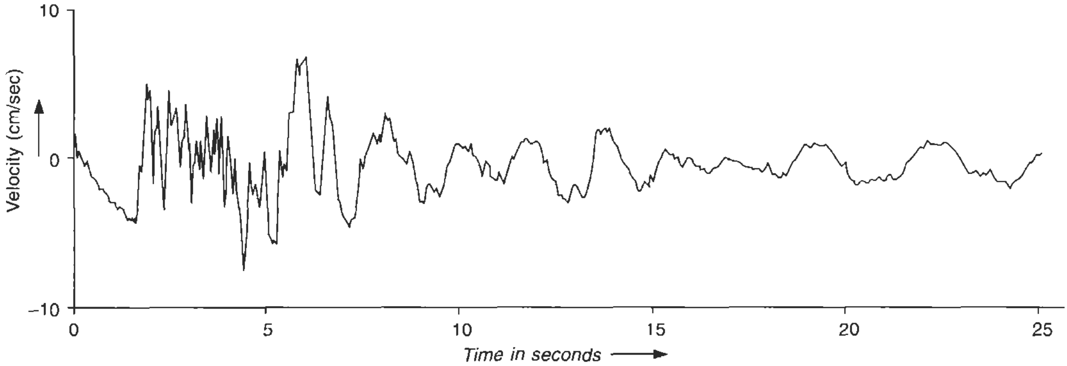

(b) Velocity

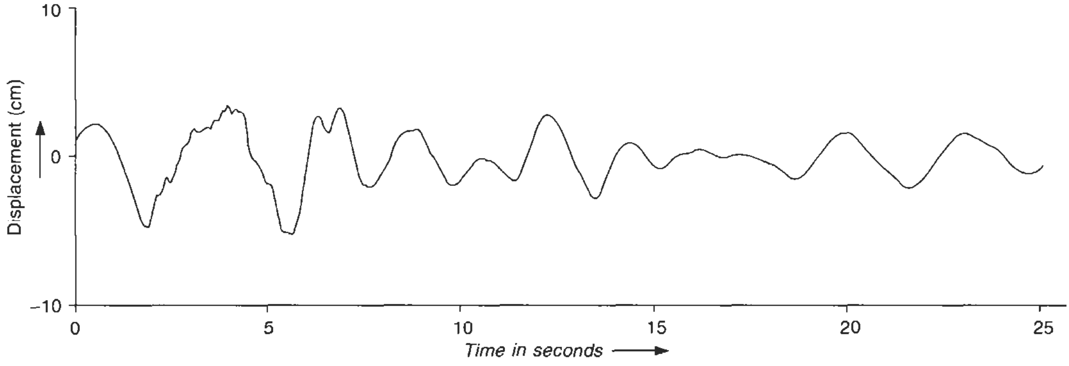

(c) Displacement

Figure 14.12(b) Time history of earthquake at Chamoli, India, which occurred in March 1999

3 Ground acceleration response spectrum in terms of spectral acceleration, *g*, versus natural period of oscillations (Figure 14.16).

These spectra represent the nature of peak displacement/velocity/forces and their magnitudes that may generate in a vibrating system of different damping levels and periods on the occurrence of an earthquake. They form the basis of equipment design and their seismic testing and are provided by the user to the equipment manufacturer.

In the above instance, the response spectra shown in Figures 14.14–14.16 are for 5% damping. The damping levels described here are generally in the range 1–10% and frequency in the range of 1–33 Hz for systems at ground level and 0.5–10 Hz for floors above the ground

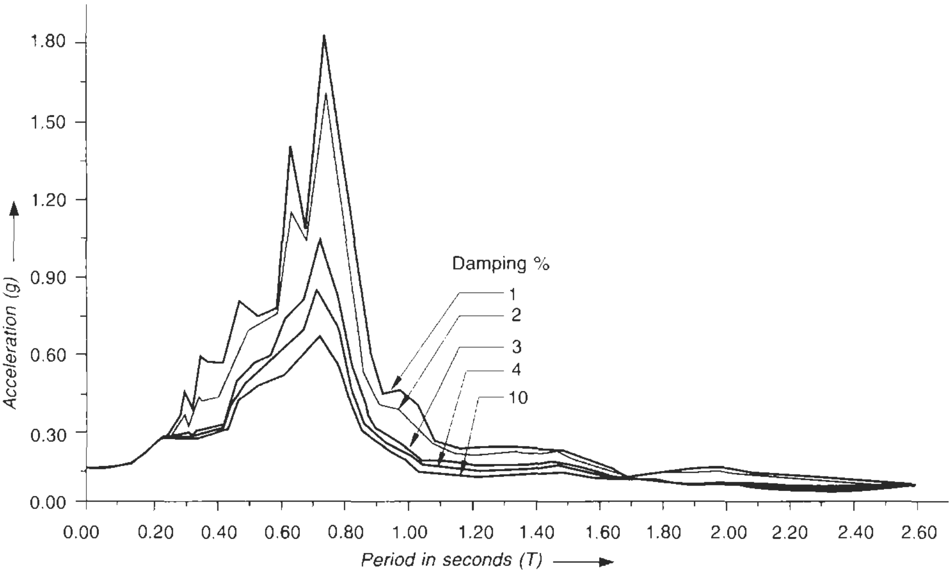

Figure 14.13 Typical broad band floor response spectra showing the floor acceleration at different damping levels

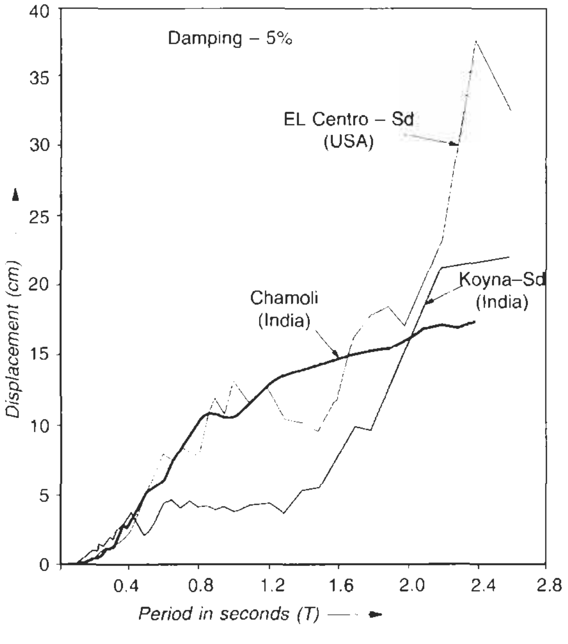

Figure 14.14 Displacement response spectra of the Koyna (India), Chamoli (India) and EL Centro (USA) earthquakes

level, due to filtration, discussed later. It is, however, observed that most of the vibrating bodies fall in a frequency range of 2–15 Hz.

Any of the three RS is adequate to derive a time history of an earthquake to simulate test conditions in a laboratory. This, however, being a complex subject, assistance must be obtained from experts in the field for constructing an RS for laboratory testing, preparing a mathematical model for analytical assessment or deciding the level of ground movement and frequency of excitation etc. To assist those in the field, the International Association of Earthquake Engineering (IAEE) has prepared a world list, coding the various countries on the following bases:

- Seismic zones
- Seismic coefficient
- Acceleration of ground motion ($\ddot{x}$)
- Velocity of ground motion ($\dot{x}$), and
- Displacement of ground (x).

The above factors must be taken into consideration while constructing an RS.

Floor response spectrum (FRS)

Some equipment will be on the ground, and some on floors above the ground in which case floor movement must be considered rather than ground movement. Floor movement is different from ground movement because of structural behaviour, characteristics and filtration of ground frequencies. Filtration of ground frequencies may lead to resonance and quasi-resonance conditions and magnify the floor movements, compared to ground movements.

Required response spectrum (RRS)

- This is the response spectrum, constructed for a particular location, for a future earthquake. It is based on seismic studies conducted for that region and past seismic records of and around that region, if available. It forms the basic parameters for the design and testing of an object.

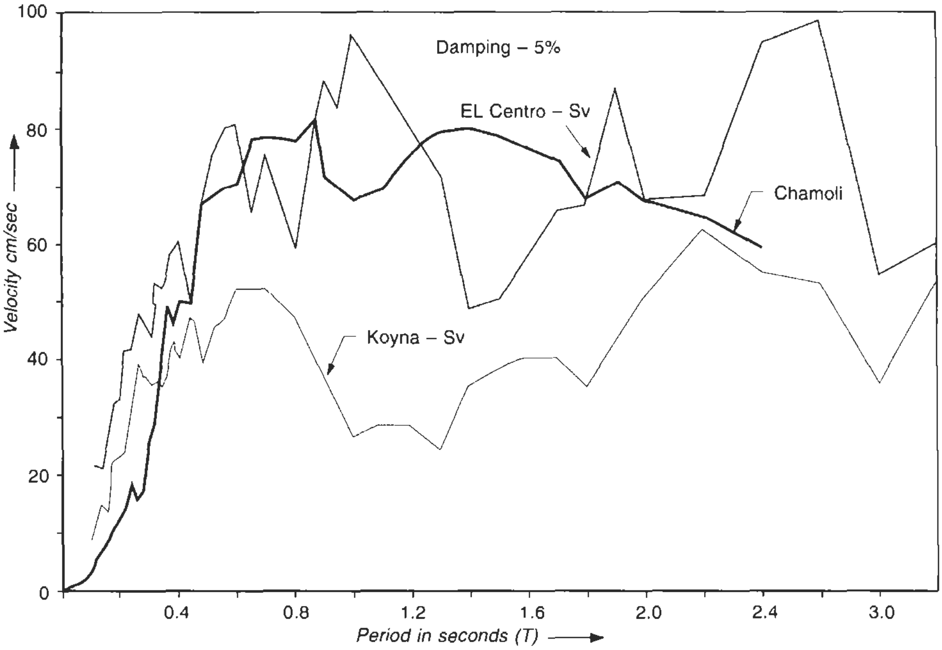

Figure 14.15 Velocity response spectra of the Koyna (India), Chamoli (India) and EL Centro (USA) earthquakes

- The RRS is defined for different levels of damping, as shown in Figure 14.13. The RRS that is more appropriate for the test object is chosen. The damping level will be assessed as noted earlier, otherwise 5% damping may be considered.
- Artificial broadening of the spectral accelerations at the peaks of RRS: If we refer to an RS such as that shown in Figure 14.16 we will notice a few peaks which, in fact, represent the resonance or quasi-resonance conditions. The RS may drop sharply immediately before or after such peaks. It is possible that during an earthquake, the corresponding peaks may occur shortly before or after the peaks considered in the RS as it may not be possible to estimate the frequency of the structure so accurately, at the time of constructing the RS. Since the test conditions

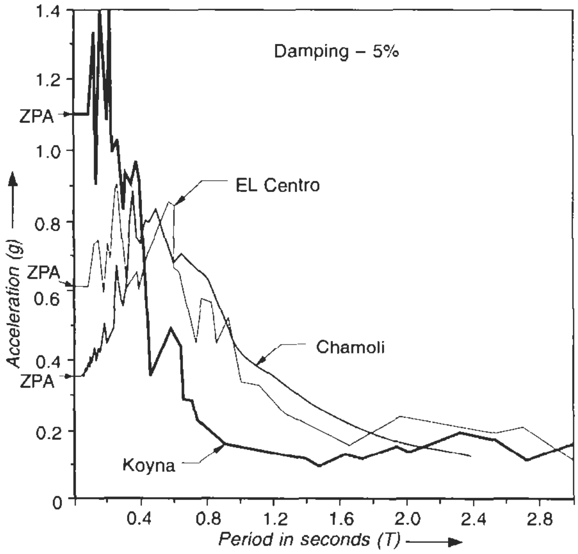

Figure 14.16 Acceleration response spectra of the Chamoli (India), Koyna (India), and EL Centro (USA) earthquakes

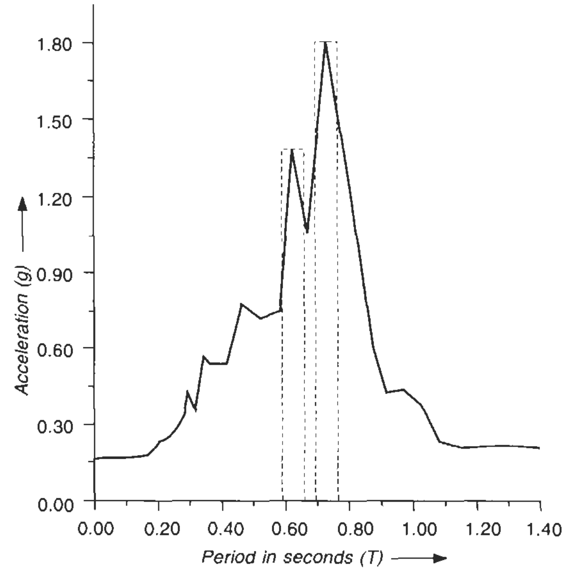

Figure 14.17 Broadening of the spectral peaks of RRS

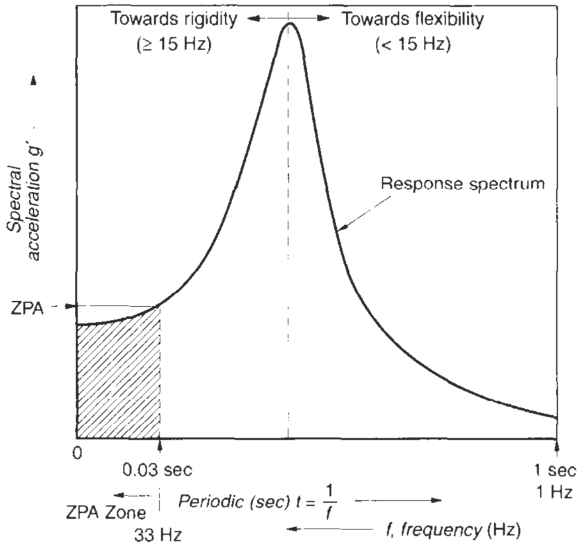

ZPA (Zero period acceleration) = Peak ground or floor acceleration as recorded by the time history. The rest is a response record.

Figure 14.18 A ground or floor response spectrum

will only trace back the RRS, it is possible that the object is not sufficiently loaded for such periods and may fail during an earthquake while the test may not be able to detect it and the object may successfully withstand the test. To overcome such an uncertainty, it is normal practice to artificially broaden the spectral acceleration in the peak regions of the RRS by ± 15% *T* or so (*T* being periods of peaks). The broadened spectral peaks are illustrated in Figure 14.17.

Zero period acceleration (ZPA)

The maximum ground or floor acceleration, as a result of an earthquake, can be obtained from a given RRS. It corresponds to acceleration at high frequency, i.e. more than 33 Hz. This is illustrated in Figure 14.18, and represents the peak ground or floor acceleration of a time history of an earthquake, from which the RRS is developed. During a test, the peak acceleration of the shake table motion (ZPA) should be at least 10% greater than the ZPA of RRS, according to IEEE 344, to account for any likely severity in the event of an earthquake.

14.6.3 Constructing the RRS

Seismic analysis is carried out for all important engineering structures such as dams, bridges and nuclear power plants. For regions where these are to be located the likely expectations of an earthquake as well as the extent of its magnitude must be assessed on the basis of the seismic history and the earthquake records of the region (Figures 14.12 to Figure 14.16). Based on these and other factors such as soil stratification, site dependent response spectra are determined. These are the RRS for equipment mounted on the ground. However, for equipment mounted on the floors of buildings, the floor spectra are determined. To do this from ground movements the building/structure is analysed and the response time history at various floors is determined. From these time histories the FRS for different floors is established. The floor response spectrum (FRS) so obtained is used as the required response spectrum (RRS) for floor-mounted equipment (secondary systems). The test conditions are developed to simulate floor spectra. They must also be regarded as the basis of the design response spectra for all critical equipment and devices.

The following are the main parameters that must be considered to arrive at the most appropriate response spectra:

1. Magnitude of the earthquake, hypocentral distance and soil stratification.
2. Based on above peak value of ground acceleration, duration and frequency range.

An RRS is normally constructed for several levels of critical dampings as illustrated in Figure 14.13. The most appropriate of these is then chosen for the purpose of testing. Any of the above response spectra can be developed into a time history of the earthquake, similar to that in Figure 14.12(b).

Hypocentre

This defines the focus, i.e. the point of source within the earth's body, from where the stored energy is released. It causes an earthquake and travels outwards in the form of seismic waves to the earth's surface.

Epicentre

This identifies the part of the earth's surface directly above the hypocentre and where it produces the most severe ground movements. Away from the epicentre, the acceleration and the intensity of ground movements diminish.

Soil stratification (rocky, alluvial or sedimented etc.)

From their focal point to the earth's surface seismic waves travel through the earth's crust and the soil. The stratification of soil, i.e. the earth's layers above the crust, plays an important role, as the intensity and frequencies of an earthquake, as felt on the earth's surface, will depend upon the type of soil strata.

It is observed that as a result of damping of soil, the soil may absorb some or most of the energy produced during an earthquake, depending upon the thickness and type of strata. Hence this may help to diminish, to a great extent, ground vibrations, i.e. ground acceleration, velocity and displacement. Further studies on the subject have revealed the following:

- **Bedrock** Ground displacement in bedrock is less and hence there is no or only a small settlement of a structure built on this rock. But since the seismic forces act directly on the structure, there is no damping of these forces or filtration of frequencies. The structure resting on such rock therefore should be adequate to absorb and sustain all the energy of an earthquake. Rock, however, forms a solid part of the earth's crust and provides a stable foundation for a building or a structure. It is least affected during a seismic event, as there is very little settlement. But in many places, the rock may be deep below the earth's surface and it may not be practical or economical to build the foundations on such rock. The universal practice, generally, is to rest the foundations on shallow soil layers only (Figure 14.19).

- **Small or moderate thickness of soil** Where there is some soil, ground displacement will be greater and seismic waves will pass through the soil. There may be some settlement of the structure due to soil compaction. While the structure will now be less subject to seismic forces, this may prove to be a worse case, as in addition to the structure being subject to almost the full intensity of the earthquake, there may also be settlement of the soil, which may result in settlement of the structure and cause it to collapse or develop cracks.

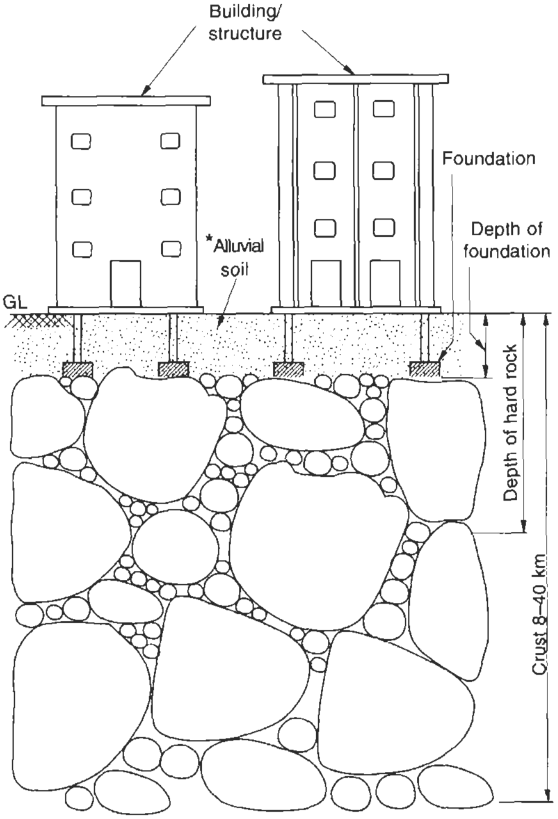

*Alluvial soil formed of a number of layers of non-uniform non-homogeneous soil of different stratifications

Figure 14.19 A typical stratification of soil

- **Reasonable depth of soil** When the soil is deeper there may be considerable settlement before seismic waves reach a structure. This soil consolidation may cause a substantial differential settlement of the structure and damage it. Although the intensity of the shock and ground movements will now be less damage may be severe as a result of settlement rather than the intensity of the earthquake, as most of the energy will be absorbed by the soil. At an increasing distance of the structure or object from the focal point of the earthquake, ground movements will diminish.
- **Greater depth of soil** when there is a deep layer of soil, the intensity of the earthquake will reduce. The greater the distance from the focal point, the smaller will be ground movements. In such cases it is seen that the settlement of the soil below the structure may be negligible as it would have already settled by the time the shock reached the surface, and hence damage to the structure would be reduced.

  Soil does not provide as solid a base as rock. The strength of a foundation built on soil and its ability to withstand an earthquake will therefore depend upon the quality and depth of soils which may be formed of a number of soil layers of different stratifications and depths. Sandy soil or soil with sedimentary deposits, for instance, will have less strength and will provide a weaker base, as such soils may settle more during a ground movement.

14.6.4 Theory of testing a system for seismic effects

A study of seismic effects on a structure, equipment or device will reveal its worthiness to withstand an earthquake without appreciable damage and perform satisfactorily during and after sudden shocks and vibrations. It is possible to study their performance through prescribed seismic withstand tests. Where a test is not possible, due to the size and/or weight of the object, performance can be assessed through mathematical analysis. Seismic testing is a complex subject. To provide the full details here is neither possible nor the purpose of this text. We have covered this subject only broadly to provide an introduction to the applicability of earthquake engineering to more constructive use structures, particularly to take safety measures in the initial stages when commencing a new project. For those in this field and who are seeking more details/clarifications on the subject, references have been provided at the end of this chapter. Whatever minimum information is considered necessary to familiarize an engineer with this subject are provided below. National and international specifications on rotating machines, switchgears and switchgear and controlgear assemblies and bus systems as discussed in Chapters 11, 14 and 32, respectively, do not normally require such tests. They become vital when such equipment is installed in a nuclear power plant and where, by virtue of its failure or malfunctioning during or after such a disturbance, they may cause a process destabilization. Such a destabilization may jeopardize the safety and integrity of the main plant, and result in an accident or radioactive radiation beyond critical limits. The radiation may cause a catastrophe to the inhabitants in the vicinity. Such tests are advisable even for machines, devices and components that are to be installed in other critical areas, such as a refinery, a petrochemical project, handling and filling areas of inflammable liquid, gas or vapour where also as a result of failure of such machines system process or control may be jeopardized and cause serious accidents, and resulting in heavy loss of life and property. The seismic worthiness relate more to the primary system than to the secondary. For a secondary system, it applies only to safety-related equipment or devices installed in critical areas as noted above. The suitability of primary systems is verified through analytical means only, as laboratory test for such systems are not practicable.

Hydro projects, dams, bridges, naval equipment and any installations that are prone to continuous shocks and vibrations also require their primary and secondary systems to have a better design and operational ability to withstand seismic effects or other ground/surface vibrations. No specific tests are presently prescribed for such applications. But response spectra can be established even for such locations and the primary and secondary systems analysed mathematically or laboratory tested.

We define below some common terms in earthquake engineering to clarify test requirements and methods:

- **Ground acceleration** This is the time history of ground acceleration as a result of an earthquake, where multiple frequency excitation predominates (Figure 14.12(b). A ground response spectrum (GRS) can be derived from this history.
- **Floor acceleration** This is the time history of acceleration of a particular floor or structure caused by a given ground acceleration (Figure 14.16). It may have an amplified narrow band spectrum due to structural filtration, where single frequency excitation and resonance may predominate, depending upon the dynamic characteristics of the structure. A floor response spectrum (FRS), as shown in Figure 14.18, can be derived from this history. Consideration of GRS or FRS will depend upon the location of the object under test.
- **Broad band** This means multiple frequencies of ground movements. During an earthquake these assume multi-frequency characteristics, which are represented by broad band response spectra (Figure 14.13). When, however, such a response is transmitted to secondary systems and objects mounted on floors, it becomes a narrow band, due to floor and structural filtration, and the amplitude of vibration is magnified. The magnification will depend upon the natural frequency and damping of the secondary systems and the objects. As normal practice, all systems and objects, mounted on the ground or a floor, must undergo multi-frequency tests. The shake table is excited to achieve a movement that represents a broad band waveform which will include all frequencies in the range of 1–33 Hz.
- **Natural frequency** When an object is mounted *in situ* (as in normal operation) and given an initial external displacement or velocity in any direction and then released, the body will oscillate about its initial position in a sinusoidal waveform as illustrated in Figure 14.20. The amplitudes of oscillations will depend upon weight, stiffness and configuration. The record of these oscillations is known as free vibration record. The rate of oscillations will determine the natural frequency of the object. Figure 14.20 shows one such free vibration record.

Damping is the characteristic of a vibrating system which defines how fast the amplitudes of a freely vibrating system will decay. The greater the damping of a system, the faster the amplitude will decay and vice-versa. The magnification of vibrations of a system, as a result of ground movements, will depend upon its natural frequency and level of damping.

Generally, all systems are flexible to some extent, except a few that may be completely rigid. A flexible system can be represented as shown in Figure 14.21, where 'resistance' represents the restoring force developed within the system, when applied with a force to displace it from its original axis X-X'. It will try to regain its original shape and position and vibrate about its axis until it attenuates due to damping. Vibrations are caused as the system (which may be any object) returns to its original position and overshoots the original axis X-X' to the other side. Thus vibrations of the system about its axis, commence until they attenuate. The 'dashpot' represents the resilient characteristic of the body that would try to damp the oscillations thus developed and attenuate it. The following mathematical expressions derive the properties of a system when excited by an external force $F_{(t)}$:

$$F_{(t)} = mx'' + cx' + kx$$

where

$F_{(t)}$ = force applied to the object as a function of time
x = displacement of the object
x' = velocity of the mass attained when affected by vibrations
x'' = acceleration of the mass attained during the course of restoring force.
m = mass of the object
c = coefficient of viscous damping
K = coefficient of restoring force (or stiffness of the foundation)

This equation can also be rewritten as

$$\frac{F_{(t)}}{m} = x'' + \frac{c}{m} x' + \frac{k}{m} \cdot x$$

If ω_n is the natural angular frequency of vibration of an object in rad/s, i.e. $2\pi f$, f being the natural frequency of vibration in Hz, then

$$\omega_n = \sqrt{\frac{k}{m}} = 2\pi f$$

$$\text{or } f = \frac{1}{2\pi} \sqrt{\frac{k}{m}}$$

Since the natural time for one full vibration (one cycle),

$$T = \frac{1}{f}$$

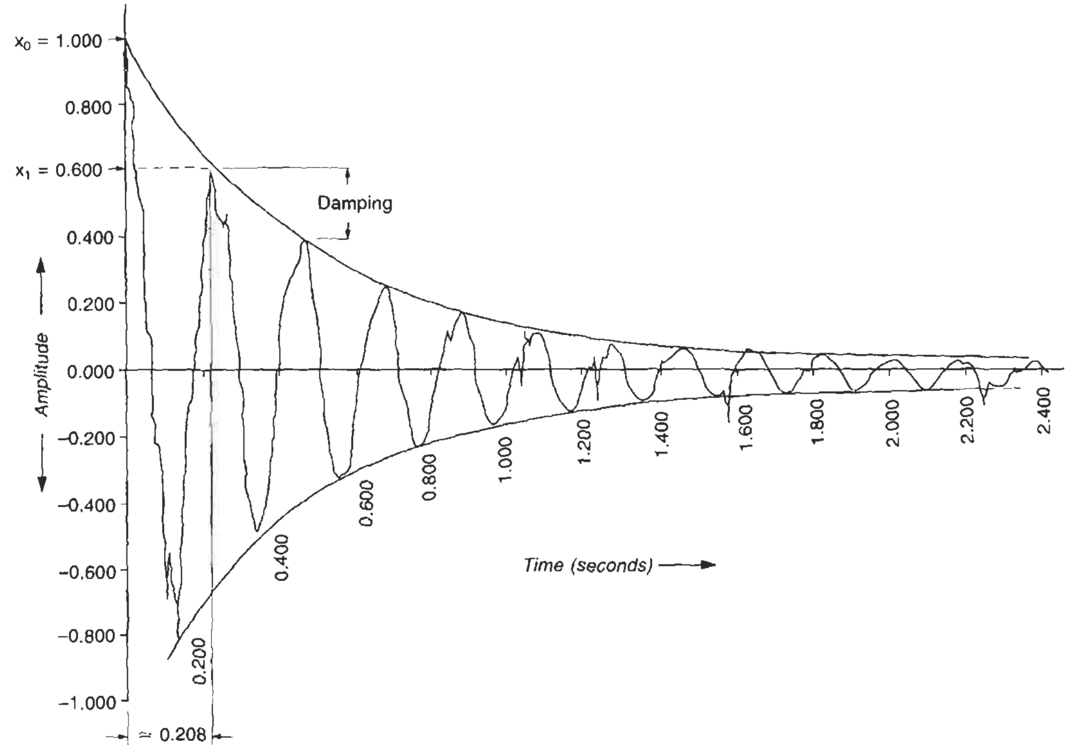

Figure 14.20 A typical free vibration record (sine wave) illustrating natural frequency of vibration and level of damping of an object

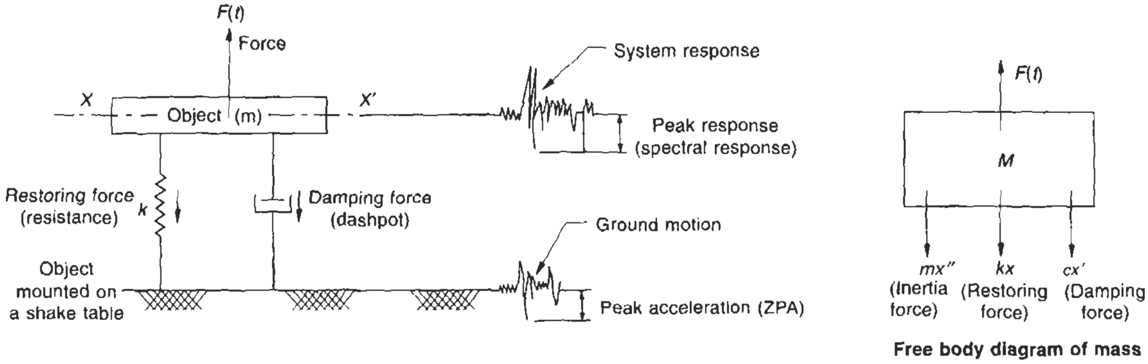

Figure 14.21 A single degree of freedom system

$$\therefore \; T = 2\pi\sqrt{\frac{m}{k}}$$

and $\eta = \dfrac{c}{2\sqrt{km}}$

η is the fraction of the critical damping constant, then

$$\frac{c}{m} = 2\eta\,\frac{\sqrt{km}}{m}$$

$$= 2\eta\sqrt{\frac{k}{m}} = 2\eta \cdot \omega_n$$

and $\dfrac{F}{m} = x'' + 2 \cdot \eta \cdot \omega_n \cdot x' + \omega_n^2 \cdot x$

This is an important equation that defines the behaviour of a vibrating body under different conditions of applied force or motion $F_{(t)}$. From this it can be inferred that the response or movement of object 'x' will depend upon η and $\omega_n \cdot \eta$ is termed the fraction of critical damping and ω_n, the angular natural frequency of the system. With the help of these equations, the response characteristics of an object to a force $F_{(t)}$ can be determined.

Damping characteristics

An object can acquire the following four types of damping characteristics:

1 **Undamped systems** (Figure 14.22(a))
Where there is no damping force, such as friction or air resistance, the object will continue to oscillate about its initial position for ever (but this does not happen as it is natural). Now

$$c = 0$$

$$\therefore\ \eta = 0 \text{ and}$$

$$x_0 = x_1 = x_2 \text{ etc.}$$

2 **Underdamped systems** (Figure 14.22(b))
Most systems fall in this category. As a result of the restoring force, the object returns to its original position, overshoots its original axis and goes to the other side and hence the oscillations commence. For mathematical convenience, it is generally assumed that damping is viscous in nature, which means that the amplitude of a vibrating body will decay exponentially, i.e.

$$\frac{x_0}{x_1} = \frac{x_1}{x_2} = \frac{x_2}{x_3}$$

and

$$\log_e \frac{x_1}{x_2} = \frac{2\pi\eta}{\sqrt{1-\eta^2}} \simeq 2\pi\eta \text{ (for } \eta \text{ to be too small)}$$

$$\text{or } \eta = \frac{1}{2\pi} \log_e \frac{x_1}{x_2}$$

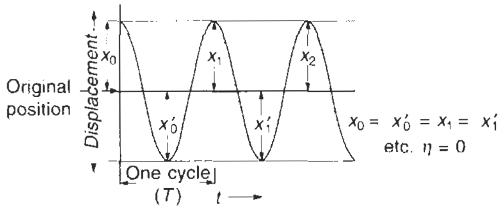

(a) Undamped free vibrations

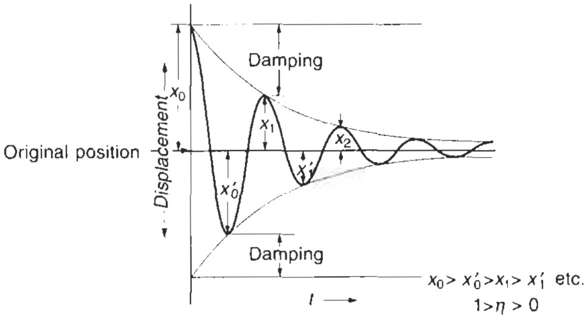

(b) Underdamped free vibrations

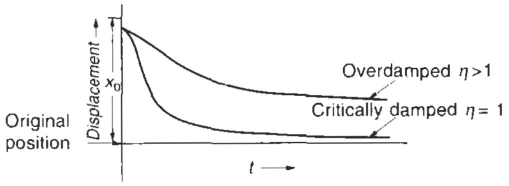

(c) Critically and overdamped system (no oscillations)

Figure 14.22 Different damping levels of a free vibrating system

For underdamped systems, $0 < \eta < 1$

3 **Critically damped systems** (Figure 14.22(c))
The object may just reach its original position. By the time it does so, it loses all its restoring force due to damping and does not overshoot. Such systems do not oscillate. For critically damped systems

$$\eta = 1$$

4 **Overdamped systems** (Figure 14.22(c))
The damping strength of the object is such that it may absorb most of its restoring force before it reaches its original position. There are no oscillations. For overdamped systems, $\eta > 1$.

Resonance leading to negative damping

When the natural frequency of a system, or object ω_n, $\left(\omega_n = \sqrt{\frac{k}{m}}\right)$ coincides with that of the ground or floor, ω, where resonance may occur due to a ground movement, this will cause magnification of vibration amplitudes, which will rise in successive cycles and destabilize the system or object and render it highly vulnerable to failure. The maximum magnification occurs at a ground or floor frequency, ω, slightly less than the natural frequency, ω_n. The magnification of vibrations is a function of its dampening characteristics, as noted earlier. Figure 14.23 illustrates the influence of the natural frequency of the system or object on the magnification of its vibration amplitudes, as a result of a ground movement ($F_{(t)}$), having a frequency, ω, for different levels of system or equipment damping.

Similarly, a build-up of amplitudes and consequent higher swings (oscillations) are sometimes noticed in transmission line conductors, tall poles or suspension bridges due to strong winds at critical speeds. This is a condition of negative damping, when the amplitudes magnify and must be avoided at the design stage. This can be done by selecting suitable lengths of transmission lines between two poles, the height of poles or the lengths of suspension bridges or by carrying out constructional changes in the system to achieve a natural frequency safe to avoid a possible resonance.

14.6.5 Test response spectrum (TRS)

This is a response spectrum obtained during a test in a laboratory while exciting the shake table with ground movements as in the RRS. The test object is mounted on the shake table. The test object should respond normally during such movements. The test conditions (i.e. TRS) should closely overlap the required seismic conditions (i.e. RRS) of Figure 14.25.

14.6.6 Test requirements

To test large to very large objects such as primary systems, where a laboratory test is not practical, seismic checks are established through analytical means. Similarly, for very large and heavy secondary systems such as turbines, alternators or transformers and reactors also their

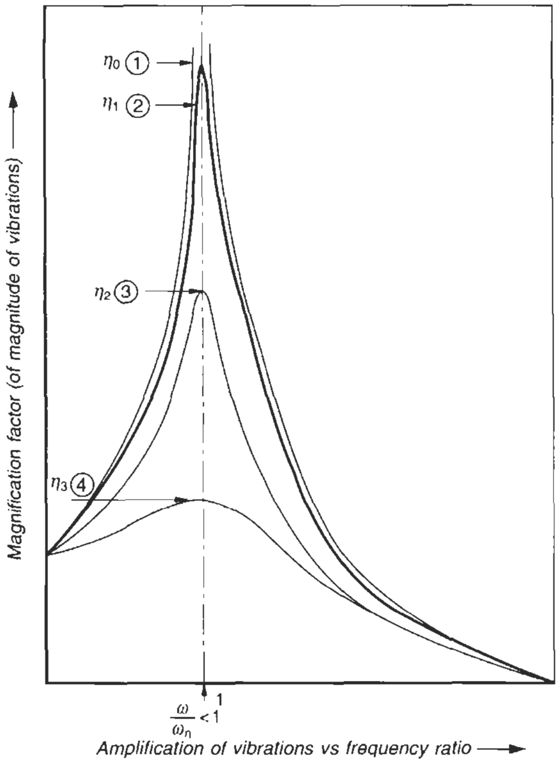

Note

1. The peak of all the curves represent the condition of resonance that occurs when the system or equipment frequency ω_n is a little higher than of the ground motions ω or $\frac{\omega}{\omega_n}$ is slightly less than 1.
2. Curve 1 represents a system that is undamped, fig(a) of 14.22
3. Higher the level of damping, lower will be the amplifications, $\eta_1 < \eta_2 < \eta_3$.

Figure 14.23 Amplification of vibrations versus frequency ratio

worthiness is established through mainly on mathematical analysis. Below we briefly discuss guidelines for testing such objects that can be tested in a laboratory.

Now that it is possible to establish test facilities in a laboratory to simulate the time history of an earthquake seismic tests are conducted by creating the ground movements in the test object. Other methods, such as by analysis or by combined analysis and testing, are also available. Refer to IEEE 344 and IEC 60980 for more details. For this purpose a shake table, able to simulate the required seismic conditions (RRS) is developed on which the test object is mounted and its performance observed under the required shock conditions. Since it is not easy to create such conditions in a laboratory, there are only a few of these facilities available. The better equipped laboratories are in Japan, the USA, the UK, Greece, Germany, India and China. In India the Earthquake Engineering Department (EQD) of the University of Roorkee (UoR) is equipped with these facilities.

The test object is mounted on the shake table and subjected to movements at the desired level and frequency in the horizontal and vertical directions simultaneously and its performance is critically observed, recorded and analysed during and after the tests. Where tests in all the three axes are not possible, two axis tests (two orthogonal horizontal and one vertical) are also permissible, which can also simulate the three axes conditions. For more details refer to IEEE 344 or IEC 60980.

Free vibration test

This is conducted to check the dynamic behaviour of the test object. It determines its natural frequency of oscillations, f_n, and level of damping, η, under *in-situ* condition before conducting the seismic tests. The test object is mounted rigidly on a platform as in its actual service position. It is then shaken gently by a collapsible string, tied at the centre of the top of the object and is pulled horizontally parallel to the X–X' axis. The string will snap at a certain force and will make the object swing sinusoidally. A graph may be plotted of amplitude versus time as shown in Figure 14.20, from which can be determined its fundamental or natural frequency, f_n, and the level of damping, η. From Figure 14.20 it can be found that

$$f_n \simeq 4.8 \text{ Hz} \left[f_n = \frac{1}{T}, T \simeq 0.208 \right]$$

$$\eta \simeq 0.035 \left(\frac{1}{2\pi} \cdot \log_e \frac{x_0}{x_1} = \frac{1}{2\pi} \log_e \frac{1}{0.6} \right)$$

Similar tests are conducted for other directions.

Duration of testing

This is the duration sufficient to simulate seismic conditions. It depends upon the algorithm used to find time history from the required response spectrum (RRS). The minimum duration of a strong movement, as recommended by IEEE 344, is 15 seconds as illustrated in Figure 14.24(b). This will require a total duration of the order of 20 seconds, including the movement's times of rise and time of decay. A duration of 20.48 seconds, as noted in the figure, is typical of a test conducted at University of Rorkee. The following tests may be conducted:

- **Fragility testing** This is a proprietory test to provide future reference data about an object, on its worthiness to operate under certain seismic conditions. When no seismic requirements are defined by the manufacturer the object is tested for its optimum capability.
- **Proof testing** This is conducted when the seismic requirements in the form of floor response spectra (FRS) or required response spectra (RRS) have been pre-determined, and consequently test response spectra (TRS) have been established. This test will verify whether the test object can withstand an earthquake, of this magnitude and characteristics.

The above tests are performed on the following basis:

1 **Operating basis earthquake (OBE) test** This is defined by an earthquake that may be expected to occur during the operating life of the object for which

it is designed. For the purpose of design, the peak ground movements should not be considered to be less than 0.1 g (IEE 344). The object should function normally during and after the earthquake without malfunctioning or affecting the safety and the integrity of the nuclear plant throughout its operating life. All the equipment installed in a nuclear power plant must undergo this level of testing.

2 **Safe shutdown earthquake (SSE) test** This is defined by the most severe earthquake that could occur, producing the maximum vibratory ground movements at the place of installation. Safety-related machines, devices and components should remain functional during an earthquake of this magnitude and maintain the safety and integrity of the plant until a safe shutdown. For the purpose of design, the peak ground movements should not be considered to be less than 0.5 g (IEEE 344). In other words, equipment conforming to this test is capable of safely shutting down the whole plant and maintaining it in the event of an earthquake of this intensity. It will also be able to perform its duties when normal conditions are restored. Such equipment is subjected to at least five OBE tests before applying the SSE test. The logic behind such a stipulation is a statistical study of earthquakes which suggested a higher probability of moderate-intensity earthquakes and a lower probability for the most severe earthquakes. A small earthquake may occur on more than one occasion for which the test object must be suitable, whereas the most severe earthquake may occur only once in lifetime.

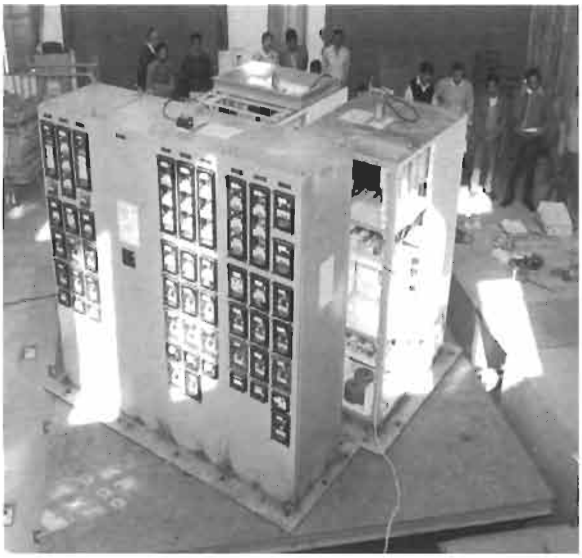

Figure 14.24(a) Panels mounted on a shake table during seismic tests at UoR

14.6.7 Test equipment

This is a shake table, dynamically balanced, consisting of a platform on which the test object is mounted (Figure 14.24(a)). Special arrangements may be required to accommodate very large objects, such as rotating machines, motors, generators turbines and transformers, except extremely large machines, where it may be impractical to establish such laboratory test facilities. UoR, India, possesses a shake table of 3.5 m × 3.5 m with a payload capacity of up to 20 tonnes. It is provided with electrohydraulic actuators with feedback controls suitable to develop the required one horizontal and one vertical movement of the test table up to 3 g (ZPA). The test is usually conducted for a time history compatible with the RRS between a frequency range of 0.2–50 Hz. The TRS is calculated conventionally at 74 frequency points, as recommended by the United States Nuclear Regulatory Commission (USNRC). The time duration, considered at about 20 seconds, will be adequate for the attack and decay periods of the shake table. Of this, the duration of a strong movement is considered for at least 15 seconds, as illustrated in Figure 14.24(b). Time of

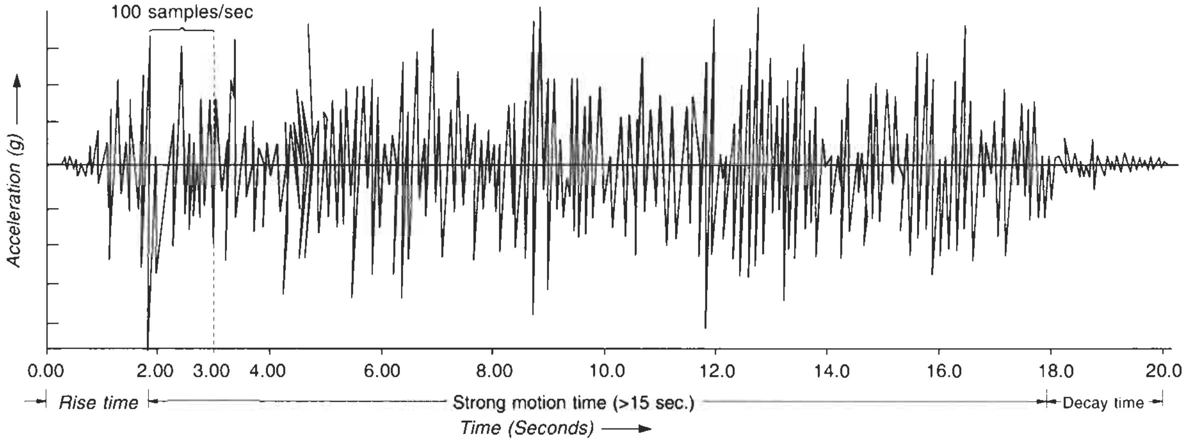

Note The TRS will envelop the RRS by minimum 10%

Figure 14.24(b) Typical time history (RRS) of shake table movements during a laboratory test rise, t_1, is adjusted according to the shape of the RRS. The data is acquired at 100 samples per second, enough to meet the requirements of accurate recording of frequency in earthquake movements.

14.6.8 Test procedure

Simulating an RRS in a test laboratory

Normally the user provides the nature of a probable earthquake in the form of RRS, i.e. acceleration characteristic curves, period versus spectral acceleration, such as those in Figure 14.18. The first objective is to generate a signal which should be able to produce a time history, on a shake table, whose response spectra match those of the RRS.

The RRS is simulated on the shake table, generally without the test object to protect it from repeated shocks. This is done in all three directions, *X*, *Y* and *Z*, by shaking the table in the respective direction and adjusting its movement according to the relevant RRS. The maximum acceleration of the table is kept higher than the spectral acceleration corresponding to the ZPA of the relevant RRS, subject to a minimum of 0.1 g for an OBE and 0.5 g for an SSE test, as discussed above. The movement of the table is recorded as 'time versus *g*' (Figure 14.24(b)). If the three directional facility is not available, the two orthogonal RRS of the horizontal directions *X–X′* and *Y–Y′* can be superimposed on each other to obtain an equivalent horizontal RRS analytically as shown in Figure 14.26. This is a permissible procedure equivalent horizontal RRS is then translated into the shake system. With the recording of the three RRS or two, as the case may be, the table is now actuated in the respective direction, according to the simulated RRS and the response spectra of the history of table acceleration obtained, which can be termed TRS and compared with the original RRS (Figure 14.25). This is plotted for 74 frequency points, 0.2–50 Hz, as prescribed by the USNRC, most of which are concentrated in the range 1–15 Hz, as noted earlier. The test response spectra should overlap the RRS by at least 10% at most of the 74 frequency points, to be on the safer side, as prescribed by IEEE 344 and illustrated in Figure 14.25. The table is actuated to obtain an acceleration equal to at least the ZPA of the respective RRS as noted above. Shortcomings in the TRS, if any, are compensated by readjusting the control signals to the table actuators and the actual tests are carried out on the test object as follows.

1 *OBE test*

Passive test The test object is mounted on the shake table and subjected to both horizontal (*X* and *Y*) movements or one cumulative orthogonal horizontal and one vertical ground movement simultaneously. Accelerometers are mounted on the shake table to measure its movements and also on the test object at its most vulnerable points. These points may be identified by the manufacturer or the user to monitor the behaviour of the object in such locations.

The test is conducted for nearly 20 seconds, of which at least 15 seconds are covered for the strong movement (Figure 14.24(b)) the remaining 5 seconds

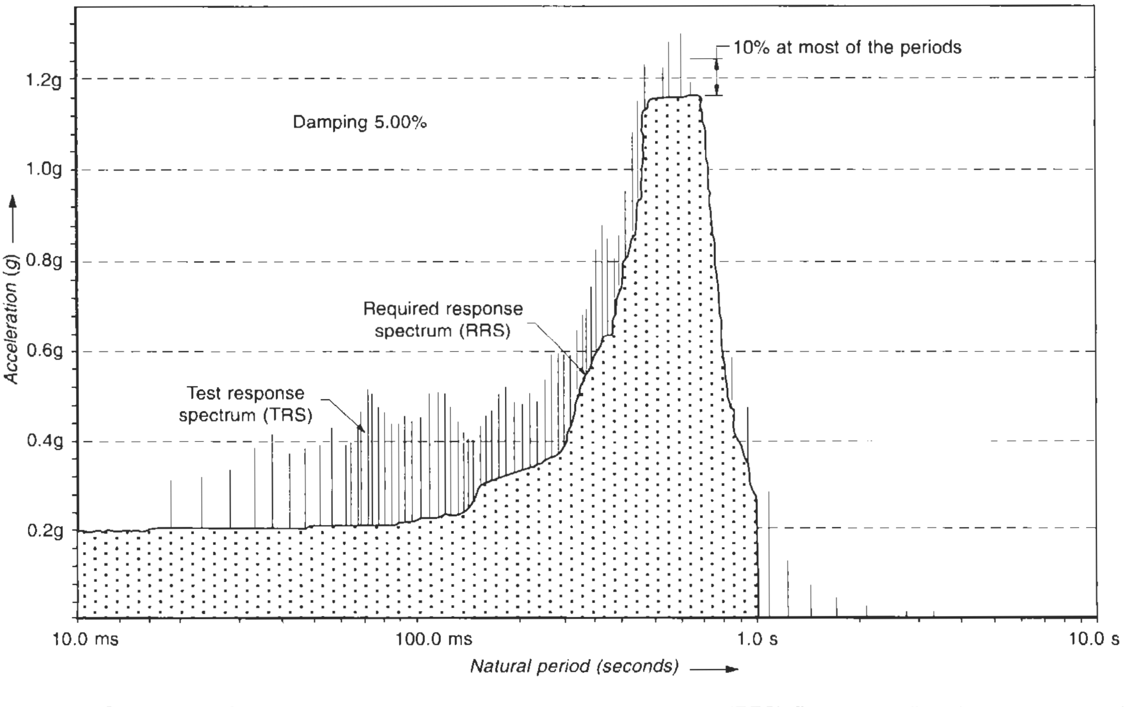

Figure 14.25 Comparison of the test conditions (TRS) with the required conditions (RRS). This is established in all three directions

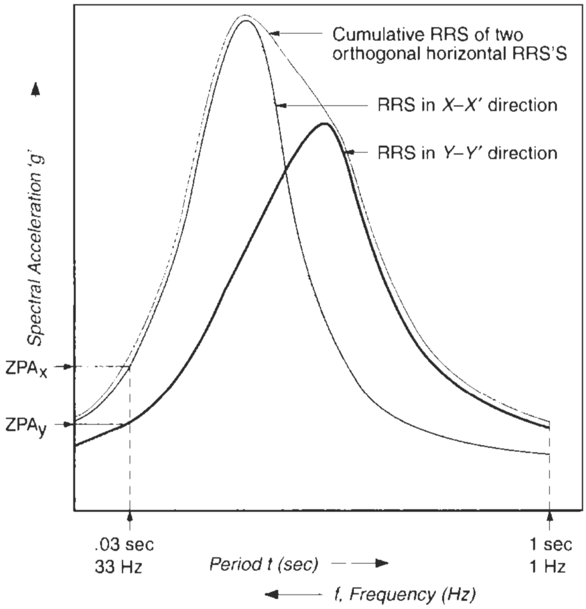

Figure 14.26 Analytical construction of an equivalent horizontal RRS

being for the table pickup and decay periods. Figure 14.25 illustrates one test result, indicating the TRS exceeding the RRS by at least 10% at most of the frequency points. The behaviour of the object is assessed for its structural and mechanical worthiness and the test is repeated in the following four positions:

1. Equipment axis X–X' parallel to the X–X' axis of the shake table (Figure 14.27 position 1).
2. Equipment turned by 90° from the first (position 2).
3. Equipment axis X–X' at 45° to the line of horizontal actuator of the shake table (position 3).
4. Equipment turned by 90° from position 3 (position 4).

Objects symmetrical through their length and width and by the distribution of their weight about the vertical axis can be tested in position 1 only. The rest can be tested in all four positions.

- **Testing under energized conditions** Testing equipment under energized conditions should be performed only after tests under passive conditions have been conducted successfully. The same test in four different positions, under energized conditions, should be conducted and the behaviour and performance of the equipment assessed.

2 SSE test

In this test equipment in a passive state is tested first in any of the four positions noted above for an OBE test. When successful, it is tested for one SSE test. If these tests are successful, then the following tests may be conducted to complete seismic testing.

Five numbers – OBE tests one after the other.

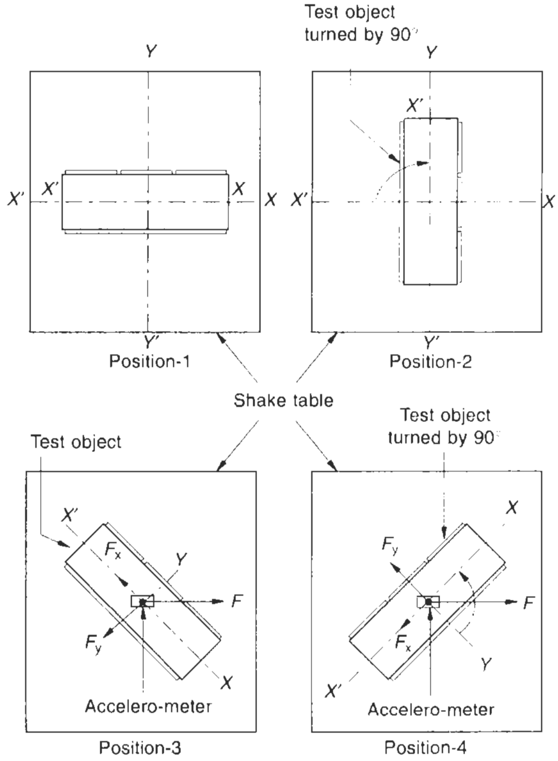

Figure 14.27 Mounting of test object and applying force

One number – SSE test under passive state or energized conditions as desired and the behaviour and performance of the equipment assessed.

- **Test results** After each test, the test object is subjected to visual and routine checks. For electrical equipment, component and devices the test requirements will generally remain those discussed in Chapters 11, 14 and 32 for rotating machines, switchgear and controlgear assemblies and bus systems respectively, unless there is a specific requirement for an additional test. If so, this must be specified by the user. In a switchgear or a control assembly in particular, the contacts of all breakers, contactors, and moving and fixed power and control contacts of a draw-out assembly should be monitored during the course of seismic tests to ensure that there is no chattering (bouncing), or breaking and making of contacts that may destabilize the plant functions or throw it out of control. The indicating and measuring instrumentation and devices must give correct indications and readings. Equipment having to perform more complex duties, such as a process control, flow control, or sequence control, or when the control panel is also controlling and monitoring many other drives or devices, must be monitored more closely during seismic tests to detect malfunctioning of any component that may jeopardize the safety and integrity of the plant. The actual operating conditions are simulated as far as is practical, before performing such tests, to represent the behaviour of all components and devices during the test and their repercussions on the process they are controlling.

14.6.9 Preventive measures

In general, this discussion relates more to primary systems, which include civil foundation and structures, on which the whole building rests. Correct civil foundations, structures, columns, beams and trusses are major components in mitigating the effects of an earthquake. All these must be capable of withstanding the shocks and vibrations of an earthquake, according to the response spectra constructed for that location. It may be noted that at higher floor levels, the building tends to act like a vibrating filter and may transmit to the object frequencies close to the natural frequency of the secondary structure. In other words, the multi-frequency band of the ground movements may reduce to a narrow frequency band, almost dominating the natural frequency of the secondary system and may become a potential cause of a likely resonance with the structure. Objects on upper floors may thus be subject to higher accelerations, sometimes many times more than ground accelerations. Hence the necessity to avoid a resonance at the design stage itself. It is possible to do this, by keeping the fundamental frequency of the floor or structure, where the secondary systems are to be mounted, away from the predominant frequency that may filter out from the ground level.

More precautions in mounting the electrical or mechanical machine, component and device on each floor or structure would contain the magnification of seismic effects to a large extent. Critical machines and components then need be designed with such a natural frequency that they do not resonate with the filtered-out predominant frequency of the structure or foundation. This is possible by suitably modifying the method of mounting or making small alterations in the construction of the object. It may be noted that a resonance may take time to build up and an earthquake may not last that long. The occurrence of a resonance, therefore, may not be as significant as the quasi-resonance (i.e. initial stages while the resonance is still building up) and this is reflected by the jagged peaks of the RS. The latest practice in the field of civil and structural engineering is to build a resilient ground floor rather than a rigid one, which can absorb the most vibrations of a seismic event and filter out to the upper floors only the frail motions. For more details, refer to the work available on the subject, as mentioned in the references.

By exercising these checks, most problems can be averted at the installation stage. The remainder can be avoided in the design of mechanical systems/construction of a machine rather than its electrical design, even in the case of an electrical machine, to ensure their required behaviour during an earthquake.

The following may be a few such design areas that may be considered, in improving the performance of a machine during an earthquake:

- Bearings and bearing housings in a rotating machine, in view of the very small gap between the stator and the rotor.
- Rigidity of doors, bus and wiring systems etc. in a switchgear or controlgear assembly.
- Limiting the use of brittle metals such as ceramic or porcelain. Although, avoiding the use of such materials in some cases may not be practical, as in the case of lightning arresters, bushings and insulators used in an HT switchgear, instrument and power transformers and reactors.
- It is mandatory to employ only static or microprocessor-based relays, components and devices wherever possible.
- Extra care needs be taken on the quality of fasteners and the method of jointing and bolting.
- Resilient but rigid foundations such as by providing spring mounts or rubber pads for machines on the floor or for components and devices mounted on the machine so that they are able to absorb the vibrations, caused by resonance and quasi-resonance effects, due to filtered out narrow band ground movements. The stiffness of the foundation (coefficient of the restoring force, k) may be chosen such that it would make the natural frequency of the equipment

  $$\omega_n = \sqrt{\frac{k}{m}}$$

  much less than the ground (exciting) frequency, ω. It is recommended to keep $\frac{\omega}{p} > 2$, to achieve an effective vibration isolation.
- The foundation and machine body/structure must prevent internal resonance, which is possible by slightly altering their designs.

The critical items may then be checked for the required response spectra (RRS) as discussed above.

Relevant Standards

IEC	*Title*	*IS*	*BS*
60044-1/1996	Specifications for current transformers	2705	BS 7626/1993
	General requirements	Part 1/1992	
	Measuring current transformers	Part 2/1992	
60044-2/1997	Application Guide for voltage transformers	4201/1991	BS 7625/1993
	Specification for voltage transformers General requirements	4146/1991	BS 7629/1995
60044-4/1980	Method for measuring partial discharges in instrument transformers	11322/1990	BS 6184/1992

60044-6/1992	Protective current transformers Requirements for transient performance	2705-3/1992 2705-4/1992	BS 7626/1993
60186/1995	Capacitive voltage transformers General requirements for measurement and protection (all voltages)	3156-1 to 4/1992	BS 7625/1993 BS 7729/1995
60051-1/1997	Direct acting indicating analogue electrical measuring instruments and their accessories Definitions and general requirements	1248-1 to 9	BS 89-1/1990
60060-1/1989	High voltage test techniques – General definitions and test requirement	2071-1/1993	BS 923-1/1990
60060-2/1994	High voltage test techniques. Measuring systems	2071-2/1991 2071-3/1991	BSEN 60060-2/1997
60298/1994	A.C. metal enclosed switchgear and controlgear for rated voltages above 1kV and up to and including 52kV	3427/1991	BSEN 60298/1996
60439-1/1992	Low voltage switchgear and controlgear assemblies Type-tested and partially type-tested assemblies	8623-1/1993	BSEN 60439-1/1994
60439-2/1987	Particular requirements for busbar trunking systems (busways)	8623-2/1993	BSEN 60439-2/1993
60694/1996	Common specifications for high voltage switchgear and controlgear standards	3427/1991	BSEN 60694/1997
60898/1995	Electrical accessories: circuit breakers for over current protection for household and similar installations	8828/1996	BSEN 60898/1991
60980/1989	Recommended practices for seismic qualification of electrical equipment of the safety system for nuclear generating stations	–	–
–	Code of practice for selection, installation and maintenance of switchgear and controlgear up to 1 kV. Installation	10118-3/1991	–
–	Criteria for earthquake resistant design of structures	1893/1991	DDENV 1998 (1-5) /1996
–	Specification for high voltage busbars and busbar connections	8084/1992	BS 159/1992

Relevant US standards ANSI/NEMA and IEEE

IEEE 4/1995	Standard techniques for HV testing
ANSI C.37.51/1989	Switchgear metal enclosed low voltage a.c. power circuit breaker switchgear assemblies—conformance test procedures
ANSI C.37.55/1989	Metal clad switchgear assemblies. Conformance test procedures
ANSI C37.57/1990	Metal enclosed interrupter switchgear assemblies. Conformance test procedures.
ANSI/IEEE 37.81/1989	Guide for seismic qualification of class IE metal enclosed power switchgear assemblies
ANSI/IEEE-308/1992	Criteria for class IE power system for nuclear power generating station
ANSI/IEEE-323/1991	Qualifying class 1E equipment for nuclear power generating station
ANSI/IEEE-336/1991	Standard Installation, Inspection and testing requirements for power instrumentation and control equipment at nuclear facilites
ANSI/IEEE-344/1993	Recommended practices for seismic qualification of class 1E equipment for nuclear power generating stations (NPGS)
ANSI/IEEE-649/1992	For qualifying class IE motor control centres for nuclear power generating stations (NPGS)
ANSI/IEEE-693/1991	Seismic design of substation equipment
NEMA 250/1991	Enclosure for electrical equipment up to 1000V. Test criteria and design tests
NEMA/ICS 6/1996	Industrial controls and systems. Enclosures

Notes

1 In the tables of relevant Standards in this book while the latest editions of the standards are provided, it is possible that revised editions have become available. With the advances of technology and/or its application, the updating of standards is a continuous process by different standards organizations. It is therefore advisable that for more authentic references, readers should consult the relevant organizations for the latest version of a standard.

2 Some of the BS or IS standards mentioned against IEC may not be identical.

3 The year noted against each standard may also refer to the year of its last amendment and not necessarily the year of publication.

Further reading

1 Agrawal, P.N., *Engineering Seismology*, Oxford and IBH Publishing Co. Pvt. Ltd, New Delhi, India.

2 Basu, S., Kumar, A. and Lawama, K.K., 'System identification of a circuit breaker pole'. *Proceedings of Tenth Symposium on Earthquake Engineering*, Roorkee, pp. 979–491 (1994).

3 Basu, S., Prajapati, G.I., Bandopadhyay, S., Kumar A. and Arya, A.S., 'Design and development of a shake table facility', *Proceedings of the Eighth Symposium on Earthquake Engineering* Vol. I. pp. 1 to 8 (1986).

4 Bressani, M., Bobig, P. and Secco, M., 'A support experimental program for the qualification of safety-related medium-voltage induction motors for nuclear power generating stations. Presented at the International Conference on the Evolution and Modern Aspects of Induction Machines Torino, July (1986).

5 Gass, Smith, and Wilson, *Plate Tectonics in Understanding the Earth*, Oxburgh, E.R. (ed.), pp. 263–285 (1973).

6 Krishna, J., Chandrasekaran, A.R. and Chandra, B., *Elements of Earthquake Engineering*, South Asian Publishers (P) Ltd, New Delhi, India.

7 Kumar, A. and Basu, S. 'Isolation in a shake table system', *Workshop Proceedings on Base Isolation*, New Delhi, June, (1989).

8 Majumdar, S., 'Seismic qualification testing of switchboards', *Siemens Circuit*, 2/91 Vol. XXVI April (1991) and 1/92 Vol. XXVI January (1992).

9 Pankaj, Basu, S. and Kumar, A., 'Seismic qualification of equipment – a need for greater understanding,' *Proceedings of National Conference on Role of Continuing Engineering Education in Industrial Restructuring*, University of Roorkee. February 1995, pp 157–162.

10 Shun Zo Okamoto. *Introduction to Earthquake Engineering*, University of Tokyo Press, Japan (1973).

11 *Symposium on Earthquake Effects on Plant and Equipment* (Vols I and II), Organized by BHEL energy system group Hyderabad, India, and Indian Society of Earthquake Technology, Roorkee, India (1984).

15

Instrument and Control Transformers: Application and Selection

Contents

15.1 Introduction

Transformers are used in an auxiliary circuit, linked to a power circuit, to indicate, measure and control its voltages and currents. They find application in a switchgear or a controlgear assembly and a switchyard. It would be impracticable to produce indicating and measuring instruments or protective devices to operate at high to very high voltages or currents. The universal practice, therefore, is to transform the high voltages, say, 415 V and above, and currents above 50 A to reasonably low values, as discussed later, for these applications. Indicating and measuring instruments and protective devices are designed for these reduced values. The transformers used to transform voltages are known as voltage transformers* and those to transform currents as current transformers. Below we discuss their classifications, basic requirements and design parameters.

15.2 Types of transformer

15.2.1 Voltage transformers (VTs)

These may be classified as follows:

1 Instrument voltage transformers
  (i) Conventional two-winding, electromagnetic voltage transformers
  (ii) Residual voltage transformers (RVTs) and
  (iii) Capacitor voltage transformers (CVTs). These may be used for metering or protection, with very little difference between the two as noted later.
2 Control transformers

15.2.2 Current transformers (CTs)

These may be classified as:

1 Instrument current transformers
  (i) Measuring current transformers
  (ii) Protection current transformers and
  (iii) Special-purpose current transformers, class 'PS'.
2 Interposing current transformers
3 Summation current transformers
4 Core balance current transformers (CBCTs)

15.3 Common features of a voltage and a current transformer

15.3.1 Design parameters (service conditions and likely deratings)

These are similar to parameters for a switchgear assembly as discussed in Section 13.4. Since they are directly associated with the same power system and interrupting devices as a switchgear assembly, they should generally meet the requirements for a switchgear assembly, except for small variations in the test requirements. For more details refer to the following publications:

1 For voltage transformers
  IEC 60044-2 and IEC 60186 (for two-winding transformers such as CVTs)
2 For current transformers
  IEC 60044-1 and IEC 60044-6

SECTION I: VOLTAGE TRANSFORMERS

15.4 General specifications and design considerations for voltage transformers (VTs)

These transformers develop a voltage on the secondary, substantially proportional to the voltage on the primary (there being no knee point saturation, as is sometimes required in CTs (Section 15.6.1(viii)).

15.4.1 Instrument voltage transformers

1 *Rated primary voltage*

This will generally be the nominal system voltage, except for transformers connected between a phase and the ground or between the neutral and the ground, when the primary voltage will be considered as $1/\sqrt{3}$ times the nominal systems voltage (V_r).

2 *Rated secondary voltage*

In Europe and Asian nations this is generally 110 or $110/\sqrt{3}$ V, (63.5 V) for phase-to-phase or phase-to-ground auxiliary circuits respectively. In the USA and Canada these voltages are 120 or $120/\sqrt{3}$ V for distribution systems and 115 or $115/\sqrt{3}$ V for transmission systems.

3 *Rated frequency*

This may be 50 or 60 Hz as the system may require. The permissible variation may be considered as ±2% for measuring as well as protection VTs. These limits are based on the recommended variations applicable for a switchgear assembly (IEC 60439-1) or an electric motor (Section 1.6.2).

4 *Insulation systems*

These transformers may be PVC taped, thermoplastic (polypropylene) moulded, fibreglass taped, polyester resin cast or epoxy resin cast depending upon the system voltage and the surroundings. HT indoor transformers, for instance, are generally polyester or epoxy resin cast, and are economical with good dielectric properties. They are resistant to humid, chemically contaminated and hazardous areas. Outdoor HT transformers, however, may be epoxy

---

* Potential transformer (PT) is not the appropriate word to identify an instrument voltage transformer.

resin cast, oil or SF_6 insulated and oil or SF_6 cooled. Epoxy insulation provides better mechanical and constructional qualities. They are resistant to humid, contaminated and corrosive atmospheres and are suitable for all HT systems. They are mechanically strong and can bear shocks and impacts.

5 *Creepage distances*
For outdoor installations the recommended minimum creep distances for all types of voltage or current transformers are given in Table 15.1, according to IEC 60044-1 or IEC 60044-2.

6 *Tappings*
Tappings are generally not necessary, as a transformer is designed for a particular voltage system. If and when such a need arises (as in a control transformer (Section 15.4.5)) they can be provided on the primary side of the transformer.

7 *Rated output*
The standard ratings, at 0.8 p.f. lagging, may be 10, 15, 25, 30, 50, 75, 100, 150, 200, 300, 400 or 500 VA or as the auxiliary circuit may demand. The procedure to determine the total VA burden of a circuit is described in Section 15.4.5. Typical values of VA burden for a few instruments are given in Table 15.2 from data provided by the manufacturers.

8 *Rated burden*
This is the maximum burden the transformer may have to feed at a time. The preferred values will follow series R-10 of ISO-3 (IEC 60059) and as noted in Section 13.4.1(4).

Table 15.1 Recommended values of minimum creepage distances for a VT or a CT

Pollution level	*Minimum creepage distance between phase and ground mm per kV(r.m.s.) (phase to phase)*
Light	16
Medium	20
Heavy	25
Very Heavy	31

Table 15.2 Typical values of VA burdens

	Instruments	*Maximum burden (VA)*[a]
1	Voltmeter	5
2	Voltage coil of a watt-meter or a power factor meter	5
3	Voltage coil of a frequency meter	7.5
4	Voltage coil of a kWh or a kVAr meter	7.5
5	Recording voltmeters	5
6	Voltage coils of recording watt-meters and power factor meters	7.5
7	Voltage coil of a synchroscope	15

[a]These VA burdens are for moving iron instruments. For electronic meters these values would be of the order of 0.1 to 0.5 VA.

9 *Short-time rating*
This is not material in voltage transformers, as neither the voltage measuring instruments nor the protective relays will carry any inrush current during a switching operation or a fault. No short-time rating is thus assigned to such transformers.

The electromagnetic unit, however, as used in a residual VT (Section 15.4.3) or a capacitor VT (Section 15.4.4) should be suitable for carrying the heavy discharge or inrush currents during a capacitor discharge or switching respectively.

10 *Accuracy class*
The accuracy of a VT depends upon its leakage reactance and the winding resistance. It determines the voltage and the phase errors of a transformer and varies with the VA on the secondary side. With the use of better core material (for permeability) (Section 1.9) and better heat dissipation, one can limit the excitation current and reduce the error. A better core lamination can reduce the core size and improve heat dissipation.

- **Measuring voltage transformers** Standard accuracy class may be one of 0.1, 0.2, 0.5, 1 or 3. The recommended class of accuracy will depend upon the type of metering and generally as noted in Table 15.3.
- **Protection voltage transformers** Generally, a measuring voltage transformer may also be used for the purpose of protection. A protection transformer, however, is assigned an accuracy class of 3 or 6, which defines the highest permissible percentage voltage error at any voltage between 5% of the rated voltage up to the voltage obtained by multiplying the rated voltage by the rated voltage factor of 1.2, 1.5 or 1.9. And when the secondary has a burden between 25% and 100% of the rated burden at a p.f. of 0.8 lagging. This accuracy class is followed by a letter 'P' such as 3P and 6P etc. The voltage and phase displacement errors should not exceed the values noted in Table 15.6.

Table 15.3 Recommended class of accuracy for different types of meters

	Application	*Class of accuracy*
1	Precision testing or as a standard VT for the testing of other VTs	0.1
2	Meters of precision grade	0.5
3	Commercial and Industrial meters	1.0
4	Precision Industrial meters (Indicating instruments, recorders and electronic integrating meters)	0.2 or 0.5
5	General industrial measurements (Indicating instruments and recorders)	1 or 3
6	Purposes where the ratio is of less importance	3

Note To choose a higher class of accuracy than necessary is not desirable.

Notes

1. A low voltage of 5%, at which the transformer is required to maintain its accuracy limit, is of great significance. A protection transformer is required to operate under a fault condition, during which the primary voltage may dip to a value as low as 5% of the rated voltage.
2. It is possible to have two windings in the secondary circuit of a VT when it is required to perform the functions of both measurement and protection.

11 *Rated voltage factor*

This is the multiplying factor which, when applied to the rated primary voltage, will determine the maximum voltage at which the transformer will comply with the thermal requirements for a specified time as well as with the relevant accuracy requirements. This factor carries a greater significance, particularly on a fault, when healthy phases may experience an overvoltage and the protection VTs may all the more be required to accurately sense this and activate the protective circuit. Such a situation may arise on a ground fault on an isolated neutral system or a high impedance grounded system (Section 20.6). Table 15.4, following IEC 60044-2, suggests the recommended voltage factors and their permissible durations for different grounding conditions.

12 *Circuit diagram*

To illustrate the important features of a VT, let us analyse its equivalent circuit diagram. Refer to a simple diagram as in Figure 15.1 which is drawn along similar lines to those for a motor (Section 1.10, Figure 1.15). For ease of analysis, the ratio of primary and secondary turns has been considered as 1:1. Then from the circuit diagram, the following can be derived:

$$\bar{V}_1 - \bar{I}_1(\bar{R}_1 + \bar{X}_1) = \bar{V}_{1'} \text{ and}$$

$$\bar{V}_1' - \bar{I}_2'(\bar{R}_2' + \bar{X}_2') = \bar{V}_2'$$

and this is drawn in the form of a phasor diagram (Figure 15.2). The phase displacement between phasors $\bar{V}_1$ and $\bar{V}_2'$ is the phase displacement error 'δ' as discussed later.

13 *Voltage error or ratio error*

This is the error in the transformed secondary voltage as generally caused by the excitation current I_1, and as shown in Figure 15.1. It is the variation in the actual transformation ratio from the rated and is expressed by

$$\text{Voltage error} = \frac{K_n \cdot V_2^* - V_1^*}{V_1^*} \times 100\%$$

where

K_n = rated transformation ratio

V_1 = actual primary voltage (r.m.s.)

V_2 = actual secondary voltage (r.m.s.)

Note

*Only the r.m.s. values and not the phasor quantities are considered to define the voltage error. The phase error is defined separately. Together they form the composite error. Refer to Table 15.5 for measuring and Table 15.6 for protection VTs.

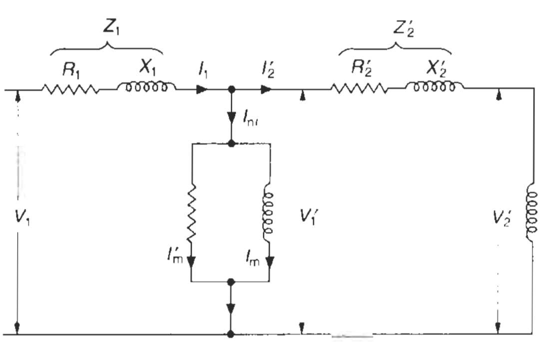

V_1 – Primary voltage

V_1' – Primary induced emf

V_2' – Secondary induced emf referred to the primary side (V_2 being secondary induced emf not shown)

I_{nl} – Excitation or no-load current

I_m' – Loss component of current supplying the hysteresis and eddy current losses to the voltage transformer core (it is the active component)

I_m – Magnetizing component producing the flux 'φ' (it is the reactive component)

R_1 – Primary circuit resistance

R_2' – Secondary circuit resistance referred to the primary side

X_1 – Primary circuit reactance

X_2' – Secondary circuit reactance referred to the primary side

Z_1 – Primary circuit impedance

Z_2' – Secondary circuit impedance referred to the primary side

Z – Load (burden) impedance

Figure 15.1 Equivalent circuit diagram for a voltage transformer

14 *Phase displacement error, δ*

This is the difference in phase between the primary and the secondary voltage phasors (δ). The direction of the phasors are so chosen, that the angle is zero for a perfect transformation. Refer to the phasor diagram, Figure 15.2, and Table 15.5 for measuring and Table 15.6 for protection VTs.

15 *Limits of voltage and phase displacement errors*

- At rated frequency, these should not exceed the values given in Table 15.5 for measuring VTs, at any voltage between 80% and 120% of the rated voltage and a burden of 25–100% of the rated burden at a p.f. 0.8 lagging.
- For protection VTs these should not exceed the values given in Table 15.6 at any voltage between 5% of the rated, up to the voltages obtained by multiplying the rated voltage by the rated voltage factor as in Table 15.4, and a burden between 25% and 100% of the rated load at a p.f. 0.8 lagging. At voltages lower than 5% of the rated, the limits of error may increase disproportionately and become up to twice the specified errors at about 2% of the rated voltage, the limits of VA burden and p.f. remaining the same.

15.4.2 Electromagnetic voltage Transformers

These are single-, double- or three-phase wound-type trans-formers with windings on both primary and secondary sides (Figures 15.3(a) and (b)).

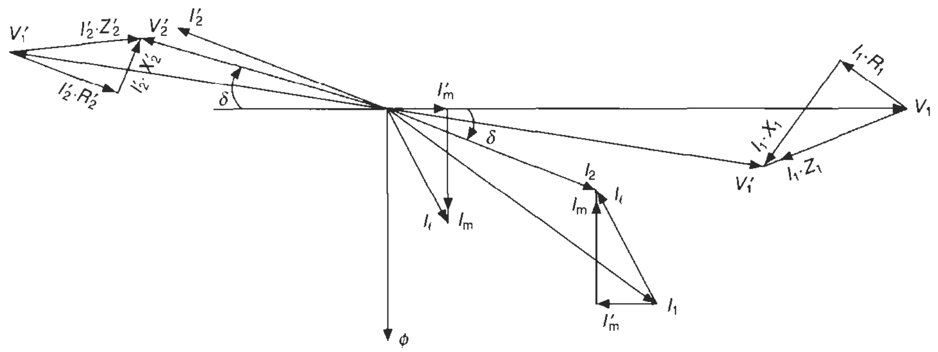

δ = Phasor displacement error

Note The phasor diagram is drawn taking the applied voltage V_1 as the reference phasor. It can also be drawn taking the primary induced emf V_1' as the reference. The logic to the diagram and the subsequent results shall however, remain the same.

Figure 15.2 Phasor diagram for a voltage transformer

Table 15.4 Rated voltage factors

Sr. no.	*Rated voltage factor*	*Rated time*	*Method of system grounding*	*Method of primary connections*
1	1.2	Continuous	All types of system grounding	(i) Between lines or (ii) Between transformer star point and ground
2	1.2	Continuous	An effectively grounded system	Between line and ground
3	1.5	30 seconds	An effectively grounded system	Between line and ground
4	1.2	Continuous	An ineffectively grounded system	Between line and ground
5	1.9	30 seconds	An ineffectively grounded system	Between line and ground
6	1.2	Continuous	(i) An isolated neutral system or (ii) A resonant grounded system	Between line and ground
7	1.9	8 hours	A resonant grounded system	Between line and ground

Table 15.5 Recommended limits of voltage and phase displacement errors, applicable for all types of measuring VTs (only electromagnetic and capacitor VTs).
(A residual VT is basically a protection VT)

Class of accuracy	*% voltage (ratio) error ±*[a]	*Phase displacement (δ) ± minutes*
0.1	0.1	5
0.2	0.2	10
0.5	0.5	20
1.0	1.0	40
3.0	3.0	Not specified

As in IEC-60044-2

[a] These errors are valid only when the voltage is between 80% and 120%, burden 25–100% of the rated burden and p.f., 0.8 lagging.

Application

They are used for both measuring and protection purposes. As a measuring VT, they are used to feed a voltmeter, kW, kWh or a kVAr meter, a power factor, frequency meter or a synchroscope. As a protection VT they are used to feed a protective circuit, incorporating voltage sensing protection relays. To save on cost and mounting space, they may also be wound for one common primary and two secondary windings, one for metering and the other for protection. For markings, see Section 15.10.1(2) and Figure 15.35.

15.4.3 Residual voltage transformers (RVTs)

When the primary of a three-phase two-winding transformer, having its secondary wound for a three-phase open delta, is connected across an unbalanced supply system, a residual voltage across the open delta will appear. This is the principle on which this transformer is based (Figure 15.4(a)). As discussed in Section 21.2.2, and illustrated in Figure 21.7, the phasor sum of all the three line to ground voltages in a three-phase balanced system is zero, i.e.

$$\bar{V}_R + \bar{V}_Y + \bar{V}_B = 0$$

When this balance is disturbed, due to either an unbalance in the loads or due to a ground fault, a residual or zero phase sequence voltage in the neutral circuit will appear. When one of the phases in the secondary of a three-phase transformer is open circuited and a three-phase supply is applied to its primary windings, there will appear

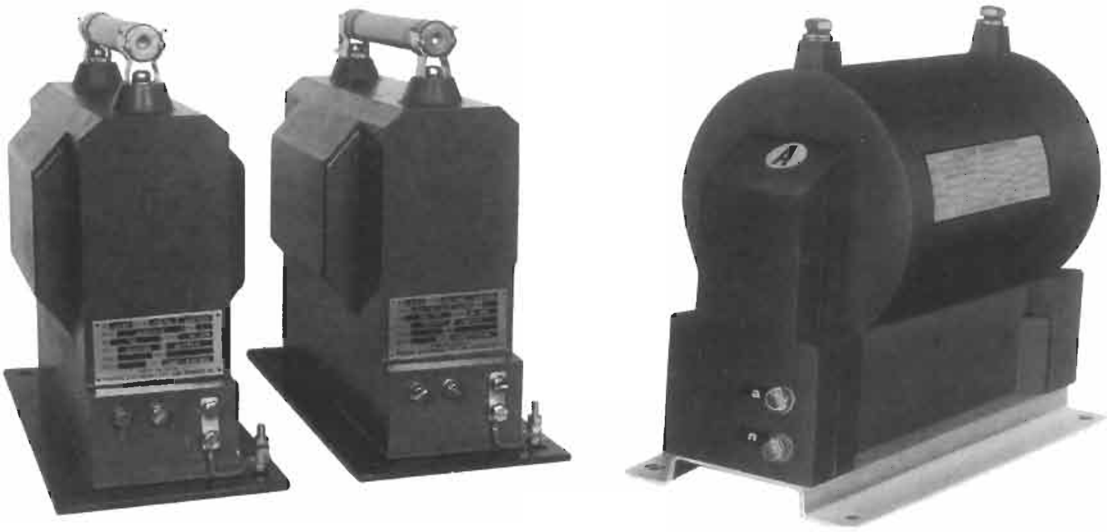

Transformers with HT fuse

Figure 15.3(a) Typical indoor epoxy resin cast instrument voltage transformers up to 11 kV (Courtesy: Kappa Electricals)

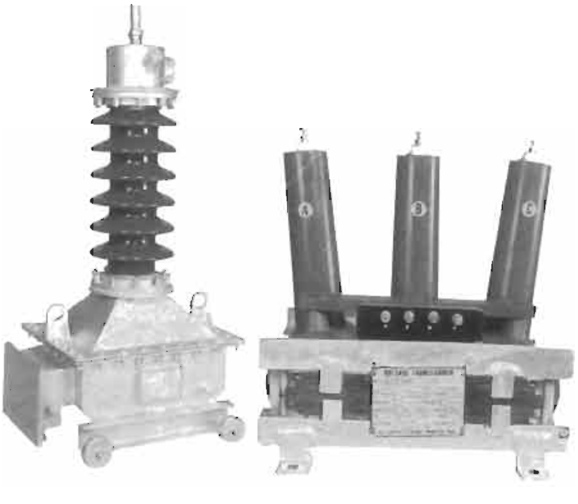

(b) 11 kV three-phase indoor

(a) 33 kV single-phase outdoor

Figure 15.3(b) Typical HT instrument voltage transformers

a residual or zero phase sequence voltage across the open terminals at the secondary. This represents the residual or the zero phase sequence voltage, whatever may exist in the main supply system. This voltage will be zero when the main primary system is balanced and healthy.

Important parameters

1 **Residual voltage** The residual voltage appearing across the secondary windings will be three times the zero sequence voltage, if it is found in the primary

Table 15.6 Recommended limits of voltage and phase displacement errors, applicable for all types of protection VTs (electromagnetic, capacitor and residual VTs)

Class of accuracy	*% voltage (ratio) error±*[a]	*Phase displacement (δ) ±minutes*
3P	3.0	120
6P	6.0	240

As per IEC-60044-2

[a] These errors are valid only when the voltage is between 5% to 'rated voltage factor × 100%', burden 25–100% of the rated burden, and p.f., 0.8 lagging.

At voltages lower than 5%, the limits of error may increase. They become up to twice the specified errors at about 2% of the rated voltage, the limits of VA burden and p.f. remaining the same.

Note

The choice of class 3P or 6P will depend upon the application and the protection scheme of the system. The following may be considered as a rule of thumb when making this choice.

(i) *Class 3P*
This class may be selected for protective devices that operate on the basis of phase relationship between the voltage and the current phasors, such as in a directional overcurrent protection, reverse power or directional distance protection.

(ii) *Class 6P*
This class may be selected for protective devices where their operation does not depend upon the phase relationship between the voltage and the current phasors, such as for an overvoltage, overcurrent or an undervoltage protection. For instance, a residual VT should have this accuracy class.

(iii) When a residual VT is employed for capacitor discharges it requires no accuracy class.

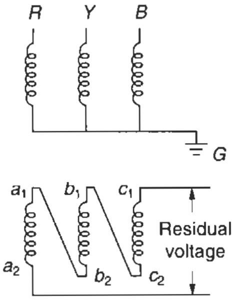

Figure 15.4(a) Connections of a residual voltage transformer

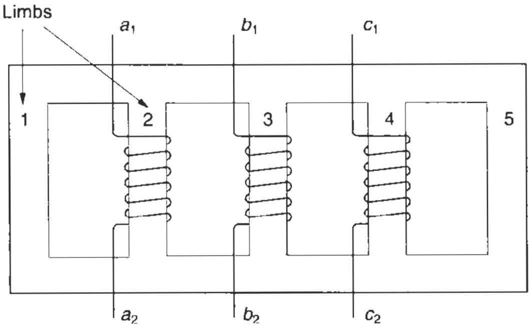

Figure 15.4(b) A five-limb transformer to carry unbalanced flux

windings. This is due to an open magnetic circuit in the secondary open delta winding having no return path through the third magnetic limb. This phenomenon does not exist when three single-phase transformers are used, as each transformer core winding will form a closed magnetic circuit of its own.

In a normal three-limb transformer the resultant flux, on a ground fault, of the two healthy lines limb will return through the transformer limb of the grounded line, inducing a heavy short-circuit current in that winding. This will induce a voltage which will be reflected in the corresponding secondary winding, and the voltage across the open terminals of the delta will not be a true residual. This situation is overcome by providing a low reluctance return path, suitable for carrying the maximum value of unbalanced flux without saturation. This is achieved by the use of a five-limb transformer (Figure 15.4(b)). The two additional outer limb are left unwound.

2 **Residual voltages under different operating conditions** To extend the ease of application of this device, consider the following circuit conditions to determine the quantum of residual voltages:

- Healthy system: System neutral, grounded or ungrounded.
- Ground fault on one phase
  - System neutral grounded
  - System neutral isolated

Healthy system

In this case, all the three phases would be balanced and the residual voltage, Ve, will be zero. The three voltage phasors in the open delta windings will be as illustrated in Figure 15.5(a). The phasor sum of these phasors is zero. Therefore $V_c = 0$.

Ground fault on one phase

System neutral grounded

Consider a ground fault on phase R. The voltage across this phase will become zero and the phasor diagram will be as illustrated in Figure 15.5(b). The other two phasors will remain the same as in a healthy system and add to give the residual voltage V_e, i.e.

$$V_e = \sqrt{V_T^2 + V_T^2 + 2 \cdot V_T V_T \cos 120^\circ}$$

where V_T is the phase voltage across the secondary windings

$$= \sqrt{2V_T^2 - V_T^2} = V_T$$

$$= 3 \times \text{zero phase sequence voltage drop.}$$

The voltage across open delta is thus the same as the fall in the voltage of the faulty phase. It will lead the current caused by the ground circuit impedance.

System neutral isolated

When the system neutral is isolated, the voltage across the faulty phase R will be the same as the ground potential and the ground potential will become equal to the phase voltage V_T as illustrated in Figure 15.5(c). The voltage across the healthy phases will become $\sqrt{3}V_T$, i.e. $\sqrt{3}$ times more than the normal phase voltage. The phasors V_Y and V_B will thus be 60° apart than 120° and 180° from the primary.

$$\therefore \; V_c = \sqrt{(\sqrt{3}V_T)^2 + (\sqrt{3}V_T)^2 + 2 \cdot \sqrt{3}V_T \cdot \sqrt{3}V_T \cdot \cos 60^\circ}$$

$$= \sqrt{3V_T^2 + 3V_T^2 + 3V_T^2}$$

$$= 3V_T$$

i.e. three times the healthy phase voltage.

Important requirements

- **Grounding** Based on the above, it is essential that the primary windings of the transformer have a grounded neutral, without which no zero sequence exciting current will flow through the primary windings. Although the open delta will develop some voltage on an unbalance in the primary, it will only be the third harmonic component, as would be contained by the primary windings' magnetic flux and not the zero sequence component.
- **Voltage factor** Since this transformer may have to perform under severe fault conditions, it should be suitable for sustaining system switching surges as well as surges developed on a fault. A voltage factor as high as 1.9 (Table 15.4) is generally prescribed for these transformers.

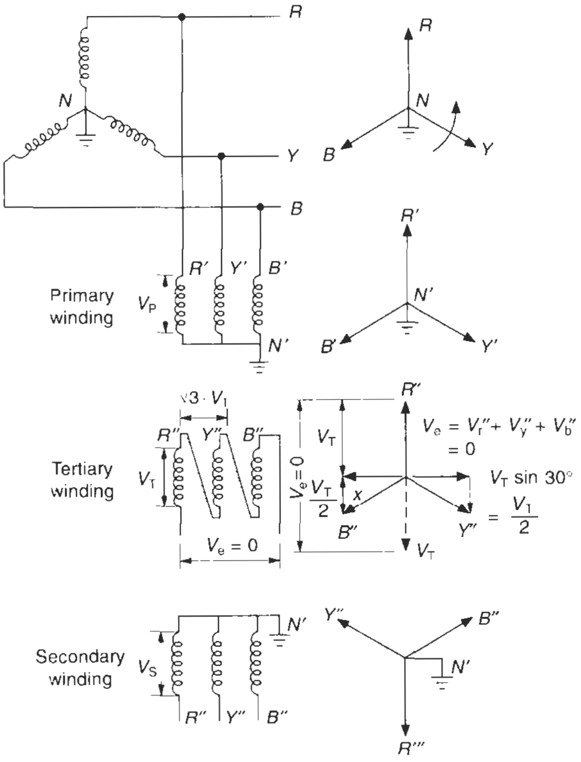

Figure 15.5(a) An RVT in a healthy system

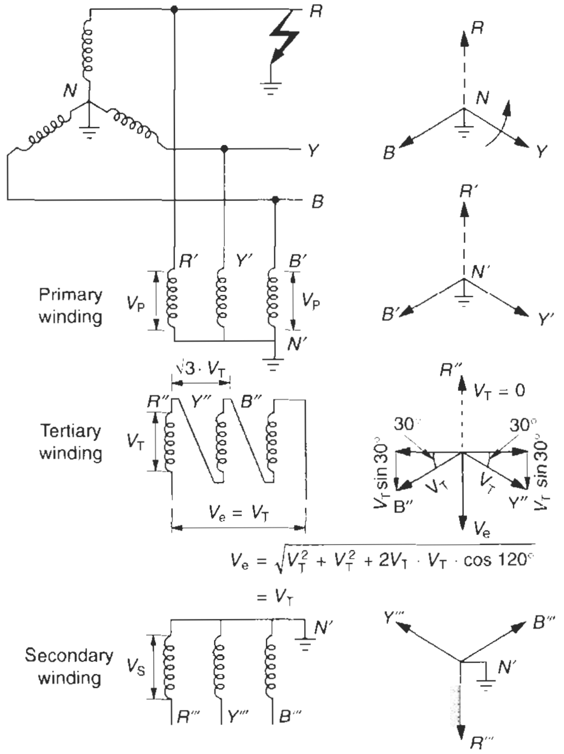

Figure 15.5(b) An RVT under ground fault on a 3-ϕ four-wire grounded neutral system

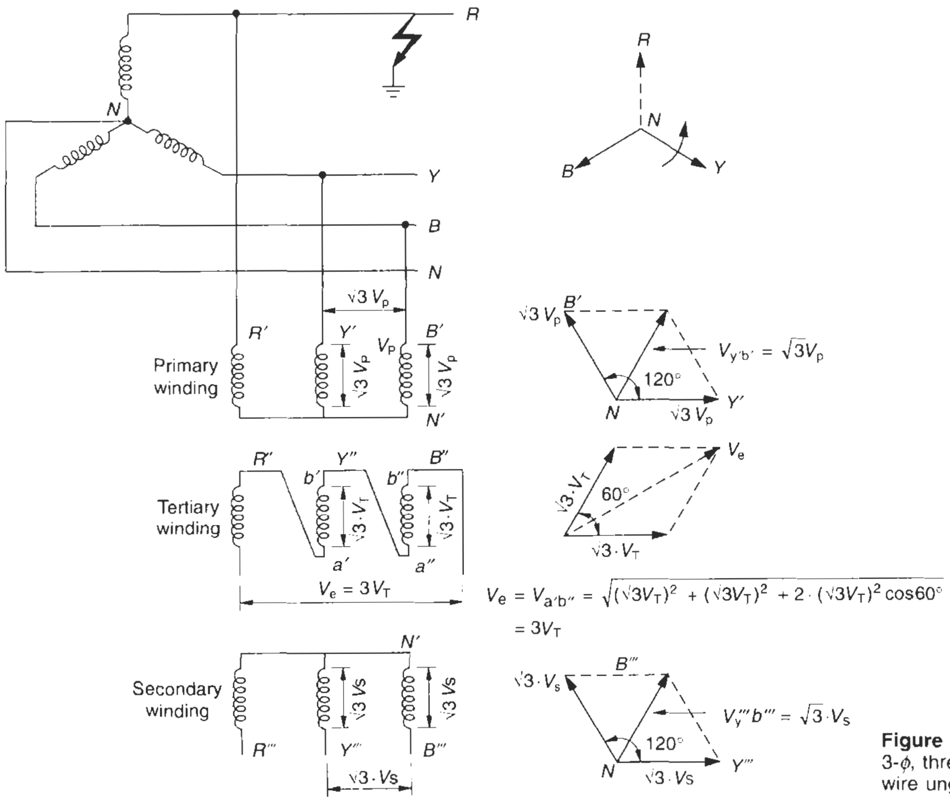

Figure 15.5(c) Ground fault on a 3-ϕ, three-wire delta or 3-ϕ, four-wire ungrounded star system

- **Short-time duty** When this transformer is required to discharge a charged capacitor bank it should be capable of withstanding heavy inrush discharge currents (see below for its application). The following may be considered when designing a transformer for discharging purposes:
  1. The size of the capacitor banks, their voltage and the impedance of the capacitor circuit.
  2. Rate of discharge of the trapped charge.
  3. The temperature of the primary windings after the discharge.
  4. The magnitude of electrodynamic forces on the primary windings, which may be developed by the discharge currents.
- **Applications** They may be used to carry out the following functions:
  1. To detect a ground fault or operate a directional ground fault relay (Section 21.7.4).
  2. To operate a neutral displacement relay (Figures 26.4 and 26.9).
  3. To detect an unbalance in a three-phase normally balanced capacitor bank (Section 26.1.1(8)).
  4. To discharge a charged capacitor bank over a very short period, particularly when a fully charged capacitor is interrupted. See also Section 25.7.
  5. To discharge an interrupted HT circuit before a re-closing. An HT system, say, a transmission line or a cable when interrupted, develops high transient voltages as discussed in Sections 23.5.1 and 20.1. Unless these transients are damped to a reasonably low level so that they are not able to endanger the connected devices on an automatic reclosing, the devices installed in the system may become damaged due to the resulting switching transients. The normal practice to deal with this is to damp the transients through an electromagnetic transformer such as this. The transformer, however, may have to be designed for such a duty to sustain the electrostatic stresses arising from such transients, the discharge time and impedance of the interrupting circuit up to the transformer.

15.4.4 Capacitor voltage transformers (CVTs)

This type of voltage transformer is normally meant for a high to an ultra-high voltage system, say, 110 kV and above. While a conventional wound-type (electromagnetic) voltage transformer will always be the first choice, it may become costlier and highly uneconomical at such voltages.

The size and therefore the cost of a conventionally wound voltage transformer will be almost proportional to the system voltage for which it is wound. As a cost consideration, therefore, a more economical alternative is found in a Capacitor Voltage Transformer (CVT) (Figure 15.6(a)).

A CVT consists of a capacitor divider unit in which a primary capacitor C_1 and a secondary capacitor C_2 are connected in parallel between the line and the ground (Figure 15.6(b)). A tapping at point A is provided at an intermediate voltage V_1, usually around 12 to 24 kV, which is reasonably low compared to the high system voltage. This helps restrict the phase error, on the one hand, and facilitates an economical intermediate wound transformer T_r, on the other, to perform the same duty as a normal wound voltage transformer. The purpose of line capacitors is thus to step down the high to very high system voltages to an economically low value. Through the tapping point A is connected a conventional and a less expensive wound-type intermediate or auxiliary voltage transformer T_r, rated for the intermediate voltage V_1 in association with a reactor L (Figure 15.6(b)). The use of the reactor is to almost offset the heavy capacitive voltage component. If possible, the reactor and the transformer may be combined in one unit to make it easier to operate. The secondary of the transformer is rated for the required standard voltage, say, $110/\sqrt{3}$ (63.5 V), to feed the auxiliary devices and components fitted in the auxiliary circuit.

The inductive reactance of the combined transformer and the reactor is chosen so that it will balance the capacitive reactance of the line capacitors at the rated frequency and thus achieve a near-resonant circuit. Since a frequency variation may cause a de-tuning of the resonant circuit, tappings are generally provided on the intermediate voltage transformer to facilitate adjustment of the circuit reactance at different frequencies, to achieve a near-resonant condition even on other frequencies. There is a voltage drop across both the capacitor units V_C and the reactor V_L. Figure 15.7 illustrates a simple equivalent circuit for the CVT of Figure 15.6(b) for more clarity. These voltage drops, being 180° out of phase, are detrimental in influencing and adding to the phase error of the intermediate voltage transformer T_r. At higher frequencies, the summation of these voltages $(\bar{V}_C + \bar{V}_L)$ may become very high and cause high phase errors, leading to erratic behaviour of the instruments, devices and components connected on the secondary of the intermediate voltage transformer. It is therefore, imperative that these voltage drops be contained as low as possible, on the one hand, and must offset each other, i.e. $\bar{V}_C + \bar{V}_L \simeq 0$, on the other, to remain almost ineffective even at higher frequency variations, in influencing the phase error of the intermediate VT.

Frequency variations are usually caused on a fault or a switching operation (Sections 20.1 and 23.5.1) and also during the changeover of the tapping of the intermediate VT or the reactor. When the voltage drops V_C and V_L are not large enough compared to V_1, the content of phase error is contained. An intermediate voltage of almost 12–24 kV is found to be realistic in restricting the voltage drops across C and L, to a reasonably low value compared to V_1 during normal operation. Further, it is essential to offset the reactances X_C and X_L through a variable reactor to achieve a near-resonant circuit when the CVT is in service. This makes the whole system behave like a normally wound VT in terms of its rating and class of accuracy for both metering and protection purposes. The same error limits will apply as for a normal VT (Tables 15.5 and 15.6). The output for a given accuracy is dependent on the range of frequency variation over which the voltage transformer is required to operate.

Figure 15.6(a) Capacitor voltage transformer (CVT) rated voltage 36–420 kV and above (Courtesy: ABB)

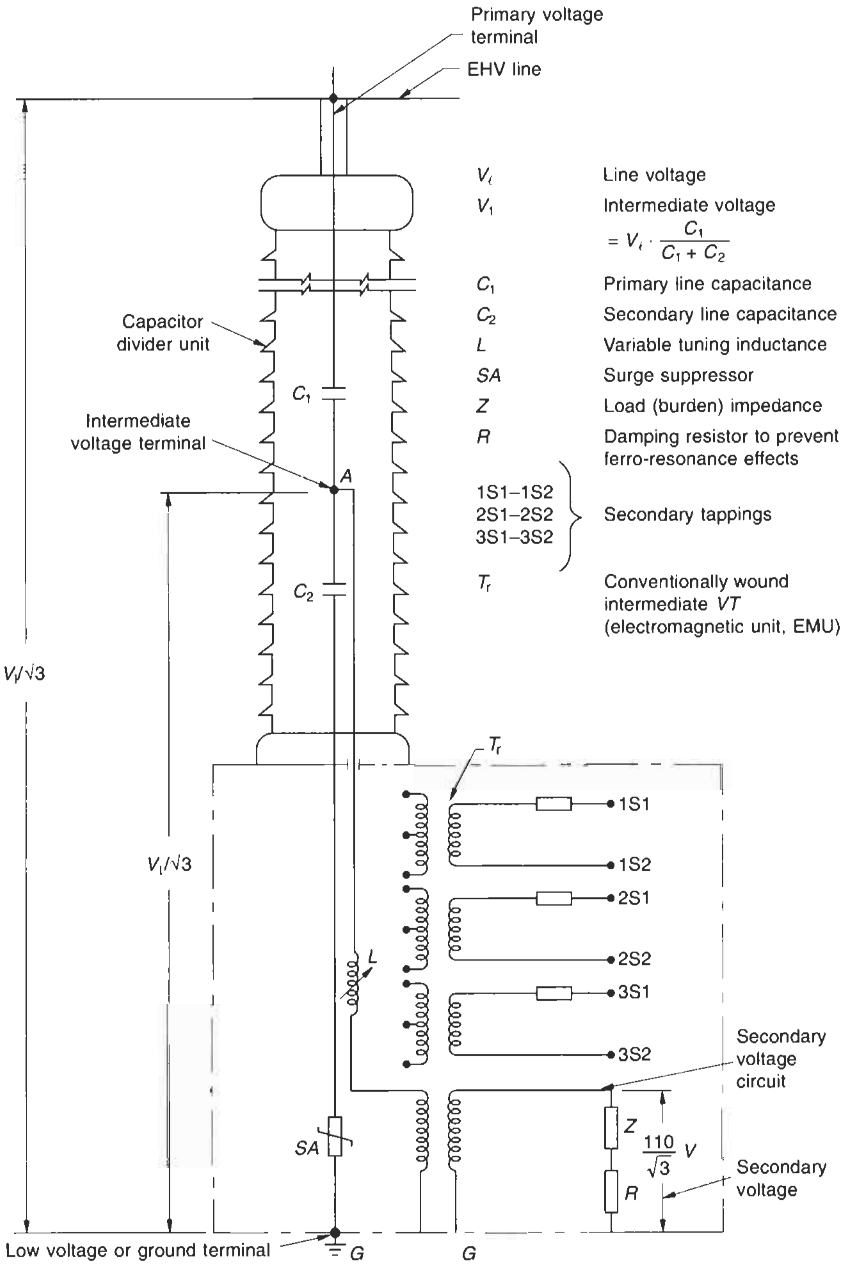

Figure 15.6(b) Schematic diagram of a basic capacitor voltage transformer (CVT)

Note

Ferroresonance: This phenomenon may occur in an isolated neutral system employing a CVT, similar to an RVT (Section 20.2.1). The core of the non-linear electromagnetic unit (EMU) may saturate momentarily during a ground fault or even during a healthy operation, under certain circuit conditions. For instance, low-frequency transients or a fault on the secondary side may cause momentary saturation of the magnetic core of the EMU, which may, in turn, resonate with the ground capacitive reactances X_{cg} and give rise to sub-harmonic oscillations. These may be detrimental to the insulation of the EMU of the CVT as well as the terminal instrument and devices connected to it. These oscillations must be damped as far as possible. This can be achieved by inserting a damping resistance *R* in the EMU circuit, as illustrated in Figure 15.6(b).

Application

A CVT may be used to carry out the following functions:

1 To measure as well as protect a high-voltage system, generally 110 kV and above. To save on cost and mounting space, the electromagnetic unit may be wound for two secondary windings, one for metering and the other for protection.

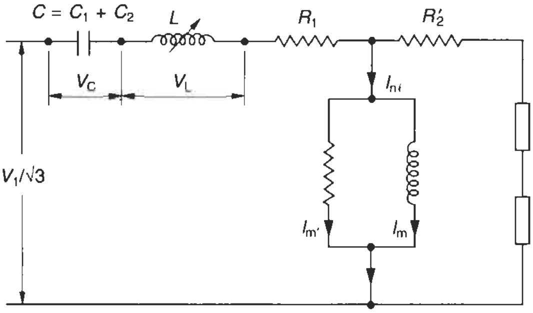

During resonance, when:

$X_c = X_L$ the circuit would behave like a normal transformer

V_c : Voltage drop across the line capacitors

V_L : Voltage drop across the inductance

R_1 : Primary resistance representing losses across '*C*' and '*L*' and the intermediate voltage transformer (EMU)

R'_2: Secondary resistance of the intermediate VT referred to the primary side.

I'_m : Loss component

I_m : Magnetizing component

Z : Load (burden) impedance

R : Damping resistor to prevent ferro-resonance effects

Figure 15.7 Equivalent circuit diagram of a CVT

2 To feed the synchronizing equipment.
3 As a coupling unit for carrier signals (Section 23.5.2 and Figure 23.9(b)).
4 To damp the transient voltages on the primary side.

For markings refer to Section 15.10.1 and Figure 15.35.

15.4.5 Control transformers

Refer to Figures 15.8 and 15.9. These transformers are quite different from a measuring or a protection transformer, particularly in terms of accuracy and short-time VA ratings. They are installed to feed power to the control or the auxiliary devices/components of a switchgear or a controlgear assembly not supposed to be connected directly to the main supply. These transformers do not require a high accuracy and can be specified by the following parameters:

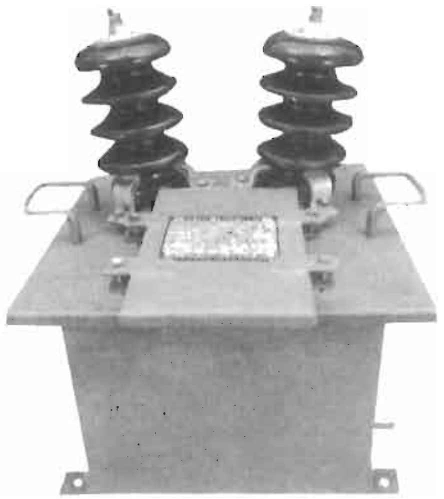

Figure 15.9 A typical outdoor type oil-filled 11 kV control transformer

1 **Rated primary voltage** The normal practice for an HT system is to provide a separate LT feeder for the auxiliary supplies. The primary voltage will be the normal system voltage, V_r, when the transformer is connected line to line or $V_r/\sqrt{3}$ when connected line to neutral.
2 **Rated secondary voltage** This is 24, 48, 110, 220, 230, 240 or 250 volts, or according to the practice of a country. Tappings, if required, can be provided on the primary side.
3 **Rated burden** This is the maximum burden the transformer may have to feed at a time. The preferred ratings will follow series R-10 of ISO-3 (Section 13.4.1(4)).
4 **Short-time VA burden** This accounts for the

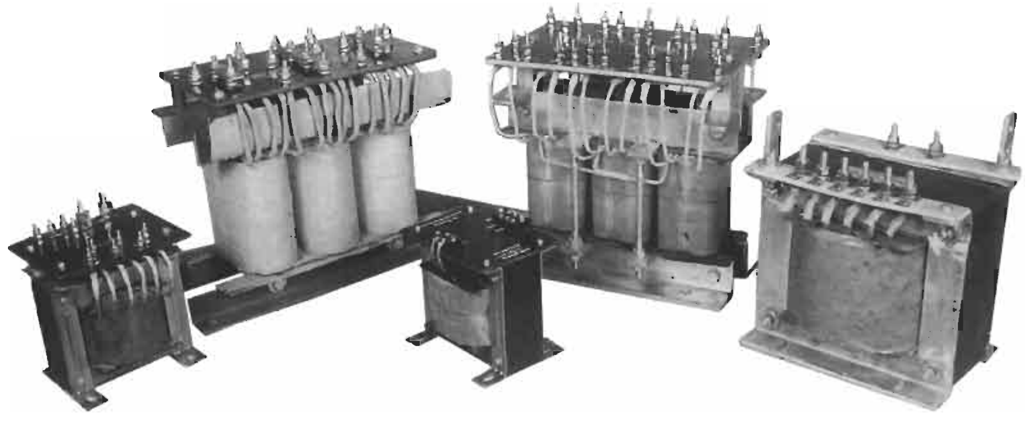

Figure 15.8 Typical single-phase and three-phase control transformers

maximum switching inrush VA burden of the various auxiliary devices connected in the switching circuit such as contactors, timers and indicating lights. Unless specified, the short-time VA burden of the transformer will be a minimum of eight times its rating at 0.5 p.f. lagging. It can be expressed in terms of VA versus cos ϕ and drawn in the form of an inrush curve, for easy selection of a transformer rating (Figure 15.10).

5 **Voltage regulation** In view of heavy currents during the switching of an auxiliary circuit, the reactance and the resistance drops of these transformers should be designed to be low to ensure a high degree of regulation during a switching operation. Regulation of up to 6% for control transformers rated for 1.0 kVA and above and up to 10% for smaller ratings is considered ideal (NEMA Standard suggests these values as 5%).

For brevity, only the more relevant aspects are discussed here. For more details, refer to IEC 60044-2 and IEC 60186, for instrument voltage transformers and IEC 60076-3 for control transformers.

Application

These may be used to feed the solenoid or the motor of an interrupting device (such as an electrically operated breaker), indicating lights and circuits, auxiliary contactors or relays, electrical or electronic timers, hooters or buzzers, and all such auxiliary components and devices mounted on a controlgear or a switchgear assembly requiring a specified control voltage.

Procedure to determine the VA rating of a control circuit

The total VA level of a control or an auxiliary circuit is the phasor sum of the VA burdens of each individual component and device connected in the circuit, and consuming power. It is advisable to add the VA burdens vectorially rather than algebraically. Since a control transformer may feed more auxiliary components and devices consuming power compared to an instrument VT, the VA rating of such transformers is generally higher than of an instrument, metering or protection VT.

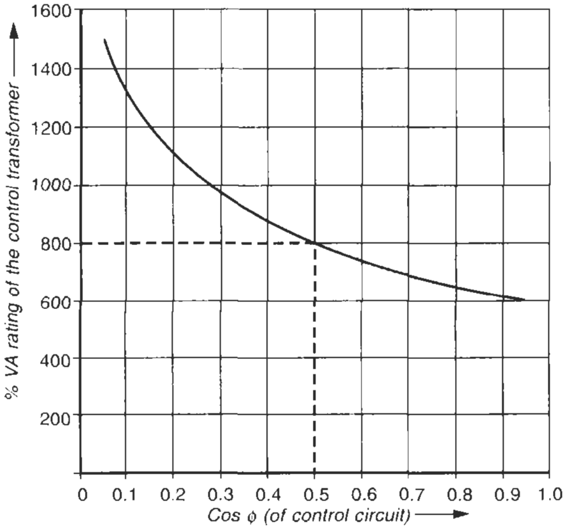

Figure 15.10 Inrush characteristics of a control transformer

Algebraic summation will lead to a higher VA requirement than necessary. The transformer should not be too small or too large to achieve better regulation in addition to cost. From Figure 15.11 the following may be derived:

$$\overline{VA}_{\mathrm{T}} = \overline{W} + \overline{VAr}$$

or $$VA_{\mathrm{T}} = \sqrt{W^2 + VAr^2}$$

$$= \sqrt{((VA\cos\phi)^2 + (VA\sin\phi)^2)}$$

where VA_{T} = Total VA burden
VA = VA burden of individual component
$W = W_1 + W_2 + \ldots$
and $VAr = VAr_1 + VAr_2 + \ldots$

W_1, W_2, VAr_1 and VAr_2 are the active and reactive components respectively of the VA burden of a device at a p.f. ϕ_1 and ϕ_2.

The following may be ascertained when selecting the rating of a control transformer:

- Maximum hold-on (continuous) *VA* burden and the corresponding p.f. of all the devices likely to be in service at a time.
- Pick-up *VA* or short-time *VA*: An electromagnetic device such as a contactor or a timer carries a high inrush current, also known as 'sealed amperes', during a switching operation and it is associated with a high momentary pick-up *VA* burden on the circuit and the feeding control transformer. The effect of the maximum momentary pick-up *VA* burden and the corresponding inflow p.f. of all the components likely to be switched at a time must be calculated.
- Maximum lead burden of the connecting wires under the above conditions.

The control transformer to be selected may have a rating nearest to the maximum hold-on *VA* burden so calculated and must be suitable to feed the required inrush current at the p.f. so calculated without affecting its regulation. So long as these two points fall below the inrush curve of the control transformer, its regulation

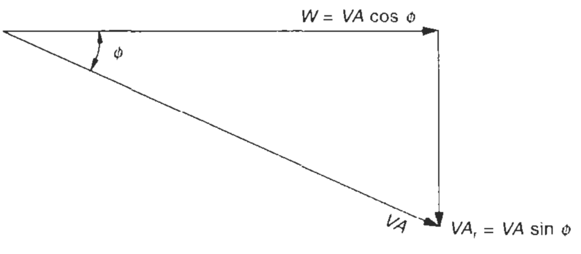

Figure 15.11 Phasor representation of a Load (VA burden).

will be maintained within the prescribed limits. Figure 15.10 illustrates this requirement and Example 15.1 demonstrates the procedure to determine the required *VA* of a control transformer.

Example 15.1

Consider the control scheme of an auto-control capacitor panel as shown in Figure 23.37. The scheme shows the control voltage as being tapped from the main bus. But for our purpose, we have considered it through a control transformer 415/110 V.

The following data have been assumed:

System: 415 V, three-phase, four wire.

Control voltage: 110 V a.c.

Control wire: 2.5 mm^2 (resistance of wire = 7.6 Ω/1000 m, as in Table 13.15).

Approximate length of wire for each feeder up to the power factor correction relay (PFCR): 35 m.

(1) A study of the control scheme

Component	*Total quantity nos*	*Maximum hold-on occurs when all the six steps of the PFCR are ON*	*Maximum inrush occurs when five steps of the PFCR are ON and the sixth is switched ON*	
			Hold on	*Inrush*
Main contactor 125 A	6	6	5	1
Auxiliary contactor 6 A	2	1 (auto or manual)	1	–
On indicating light	8	6 (auto or manual)	5	1
PFCR	1	1 (6 steps)	5	1

(2) Approximate VA burden and cos ϕ for each component, as available from the manufacturers' catalogues

Component		*VA*	*cos ϕ*	*W = VA cos ϕ*	*VAr = VA sin ϕ*
125 A contactor					
	Hold-on	65	0.31	20.15	61.79
	Inrush	900	0.42	378	817
6A contactor					
	Hold-on	15	0.33	4.95	14.16
	Inrush	115	0.60	69	92
Indicating light					
	Hold-on	7	1	7	–
	Inrush	7	1	7	–
PFCR (each step)[a]					
	Hold-on	5	1	5	–

[a] PFCRs are available in both static and electromagnetic versions. Their VA levels therefore vary significantly due to inbuilt switching relays, LEDs (light emitting diodes) and p.f. meter etc. For illustration we have considered an average VA burden of 5VA at unity p.f. for each step. For static relays, this may be too low

(3) Computing the maximum hold-on (steady state) and inrush burden values and their cos ϕ

	Maximum hold-on values			*Maximum pick-up (inrush) values*					
				Hold-on for five steps already ON			*Inrush for the sixth step*		
Component	*Qty*	*Total W*	*Total VAr*	*Qty*	*Total W*	*Total VAr*	*Qty*	*Total W*	*Total VAr*
Main contactor	6	6 × 20.15 = 120.90	6 × 61.79 = 370.74	5	5 × 20.15 = 100.75	5 × 61.79 = 308.95	1	378	817
Auxiliary contactor	1	4.95	14.16	1	4.95	14.16	–	–	–
Indicating light	6	6 × 7 = 42	–	5	5 × 7 = 35	–	1	7	–
PFCR (steps)	6	6 × 5 = 30	–	5	5 × 5 = 25	–	1	5	–
Total		197.85	384.90		165.70 (a)	323.11(b)		390(c)	817(d)

$\therefore$ $VA = \sqrt{197.85^2 + 384.90^2}$

$\simeq$ 433 without considering the burden for wire leads

$\therefore$ Total inrush, W = 555.7 ($a + c$)

and VAr = 1140.11 ($b + d$)

$\therefore$ VA $= \sqrt{555.7^2 + 1140.11^2}$

$\simeq$ 1268 without considering the burden for wire leads

Control circuit current

$I_c = 433/110 \quad = 3.94\text{A}$

and lead burden $= I_c^2 \cdot R$

where R is the resistance of the connecting wires at the operating temperature (90°C, as in Table 14.5)

$$= 6 \times 35 \times \frac{7.6}{1000} [1 + 3.93 \times 10^{-3} \ (90-20)] \ldots \Omega$$

(for details refer to Table 14.4)

$$= 2.035\ \Omega$$

$\therefore$ Lead burden $= 3.94^2 \times 2.035$

$$= 31.59\text{ W}$$

$\therefore$ Total maximum steady-state hold-on burden

$W = 197.85 + 31.59 = 229.44$

And VAr $= 384.9$

$\therefore$ Maximum VA $= \sqrt{229.44^2 + 384.9^2}$

$$= 448.1$$

at a steady-state $\cos\ \phi = \dfrac{229.44}{448.10}$

$$= 0.51$$

Control circuit current

$I_c = 1268/110 = 11.53\text{A}$

and lead burden $= 11.53^2 \times 2.035$

$$= 270.53\text{ W}$$

$\therefore$ Total maximum inrush burden

$$W = 555.7 + 270.53$$

$$= 826.23$$

and $VAr \quad = 1140.11$

$\therefore$ Maximum short-time VA $= \sqrt{826.23^2 + 1140.11^2}$

$$= 1408.0$$

at an inrush (short-time) $\cos\ \phi = \dfrac{826.23}{1408.0}$

$$= 0.587$$

Rating of control transformer

Select a continuous rating = 500 VA

at a $\cos\ \phi = 0.51$

and short-time rating = 1500 VA

at a $\cos\phi = 0.587$

The actual values as worked out above must fall below the inrush curve of the selected control transformer of 500 VA, as illustrated in Figure 15.12.

15.4.3 Summary of specifications of a VT

In Table 15.7 we list the data that a user must provide to a manufacturer to design a VT for a particular application. Some of the data chosen are arbitrary to define the specifications.

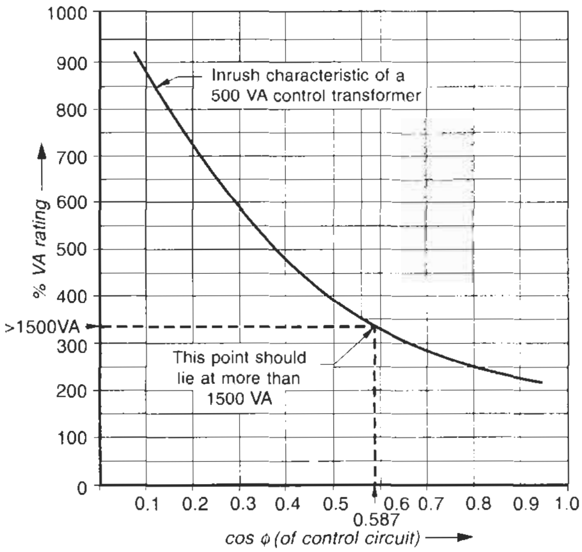

Figure 15.12 Checking the suitability of the 500 VA control transformer for the required duty for Example 15.1

15.5 Precautions to be observed while installing a voltage transformer

1. Since a VT forms an inductive circuit, it generates heavy switching current surges which should be taken into account when deciding on protective fuses. A fuse with an appropriately high rating should be chosen to avoid a blow-up during switching.
2. As a result of the generally high rating of protective fuses they provide no adequate protection against an inter-turn fault. For critical installations, and for HT VTs particularly, a separate protection may be provided for inter-turn faults.
3. When an HT-VT develops an inter-turn fault on the HV side, there is no appreciable rise in the primary circuit current and which may not be detected. But, it may cause local discharge and heating up of the inter-turns, leading to dangerous fault currents and ionization of oil in an oil-filled VT. It is advisable to provide a Bucholtz relay to protect oil-filled VTs by detecting the presence of gas in the event of a fault.
4. For lower voltages (< 33 kV), any fault on the VT will be detected by the protective devices installed in the main circuit.
5. Temperature detectors may also be provided in the windings of large VTs as are provided in a motor (Section 12.8).

Table 15.7 Summary of specifications of VTs

Sr. no.	*Specifications*	*Measuring VTs*	*Protection VTs*	*Control transformers*
1	System voltage	As in Table 13.1 ($1/\sqrt{3}$ V for line to neutral transformers)		
2	Insulation level (peak)	Generally as in IEC 60044-2 or Tables 13.2, and 14.3 for series I and Tables 14.1 and 14.2 for series II voltage systems		
3	Class of insulation say,	E	B	E
4	Frequency	50 or 60 Hz	50 or 60 Hz	50 or 60 Hz
5	Nominal voltage ratio	e.g. 6.6 kV/110 V for two phase or three phase transformers and $\frac{1}{\sqrt{3}}$ times this for line to neutral transformers		
6	Output (VA) say,	500	500	1500
7	Short-time output (VA burden) and corresponding p.f.	–	–	Say, 8 times the rated VA at 0.2 p.f.
8	Class of accuracy	0.1, 0.2, 0.5, 1 or 3	3P or 6P	Not applicable
9	Grounding conditions	Whether an isolated neutral system, an effectively grounded system or a non-effectively grounded neutral system		
10	The rated voltage factor and the corresponding rated time	Not applicable	Depends upon the system grounding. Refer to Table 15.4	Depends upon the system fault conditions and generally as 1.9 Table 15.4
11	Service conditions	• Indoors or outdoors • Whether the system is electrically exposed • Ambient temperature • Altitude, if above 1000 m • Humidity • Any other important features	• Indoors or outdoors • Whether the system is electrically exposed • Ambient temperature • Altitude, if above 1000 m • Humidity • Any other important features	• Indoors or outdoors • Whether the system is electrically exposed • Ambient temperature • Altitude, if above 1000 m • Humidity • Any other important features
12	Marking of VTs	(a) 6.6 kV/110 V, 500 VA, class 1[a]	6.6 kV/110 V, 500 VA, class 3P	6.6 kV/48 V, 1500 VA and short-time VA: eight times the rated VA at 0.2 p.f.
		(b) System voltage and insulation level, class of insulation and frequency etc. for all types of VTs		

[a] Wherever two separated secondary windings are provided, say, one for measuring and the other for protection, the markings will indicate all such details as are marked against (a) for each secondary winding.

For more details and voltages higher than 66 kV, refer to IEC 60044-2.

SECTION II: CURRENT TRANSFORMERS

15.6 Current transformers (CTs)

These may be one of the following types:

- Ring (Figures 15.13(a)–(d))
- Bar primary (Figures 15.14(a) and (b) and 15.15(a) and (b))
- Wound primary (Figures 15.15(a) and 15.16)

In ring-type CTs the primary current-carrying conductor is passed through the ring and the ring forms the secondary winding (Figure 15.13). Generally, all LT CTs are produced thus, except for very small ratings of the primary current, say, up to 50 A, when it becomes imperative to design them in the form of a wound primary due to the design constraints discussed in Section 15.6.5(v).

For special applications, such as for a motor protection overcurrent release (Figure 12.15) where the use of a ring-type CT may appear crude and the connections cumbersome, a bar primary CT may be used, as shown in Figure 15.14. HT CTs, as a matter of necessity and to maintain correct clearances and dielectric strength between the primary current-carrying conductor and the secondary windings, are made in the form of a bar primary or wound primary only, depending upon the primary current rating (Figures 15.15 and 15.16). In a wound primary, the primary is also wound the same way as the secondary.

Types of insulation

An LT CT may be insulated in the following ways, depending upon their location and application.

- **Tape insulated** (Figure 15.13(c)) For normal application and generally clean atmospheric conditions.
- **Epoxy resin cast** (Figures 15.13(a) and 15.14) To

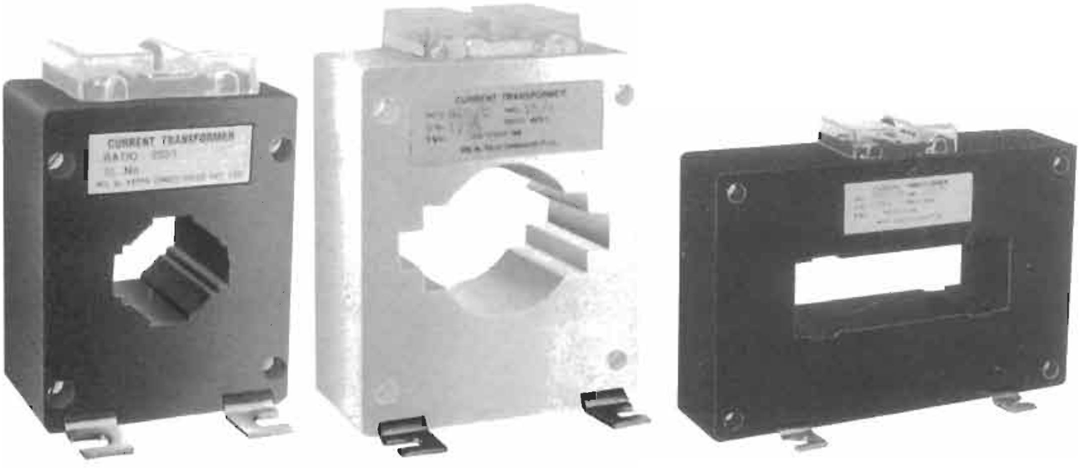

(a) LT epoxy resin cast

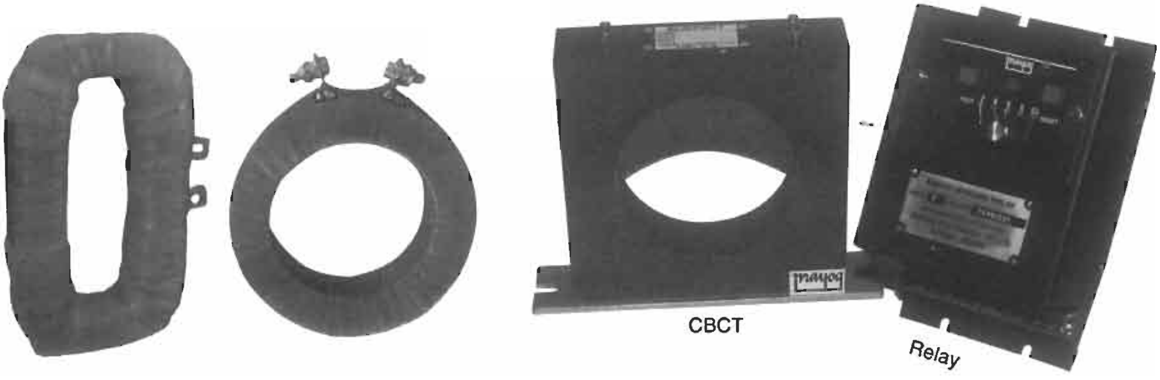

(b) LT fibreglass taped (c) taped LT PVC (d) Ground leakage relay with CBCT

Figure 15.13 Ring type CTs for measuring or protection (Courtesy: Prayog Electricals)

provide greater mechanical strength and a better insulation system. They are more suitable for humid, contaminated and corrosive atmospheres and for all HT systems. They are mechanically strong and can bear shocks and impacts.

Note
All HT CTs are normally manufactured with epoxy resin cast.

- Fibreglass tape (Figure 15.13(b)). To make it more compact.
- Polypropylene

15.6.1 General specifications and design considerations for current transformers

The rated frequency, insulation systems and the requirement of creepage distances will generally remain the same as for a voltage transformer (Section 15.4.1). For the remaining parameters, the following may be noted.

(i) Rated secondary current

This will be 1, 2 or 5 A, 1 and 5 A being more common. All measuring and protection devices are also manufactured for these ratings only as standard practice. A 1 A secondary is not recommended in higher ratios due to increased induced voltage on the secondary side during an accidental open circuit on load. It may damage the inter-turn insulation or cause a flashover, besides being dangerous to nearby components or a human body, if in contact. This we have illustrated in Example 15.8, under section 15.9.

(ii) Rated output

The standard VA values may be one of 2.5, 5, 7.5, 10, 15 and 30 generally, depending upon the application, although a value beyond 30 VA is also acceptable.

(iii) Rated burden

This is the value of the impedance of the secondary

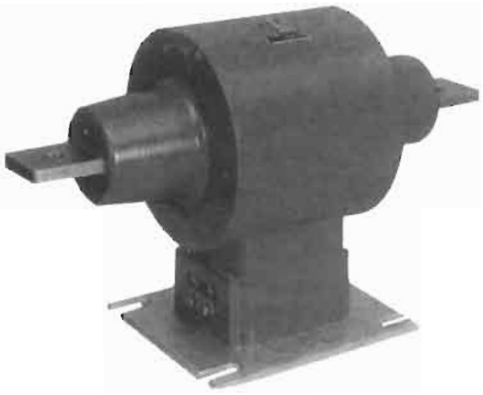

(a) Single-phase HT CT

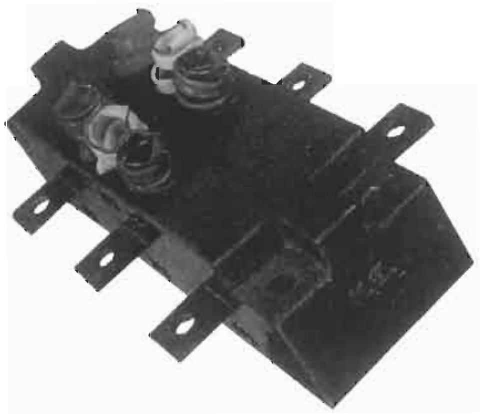

(b) Three-phase LT CT

Figure 15.14 Typical indoor-type bar primary epoxy resin cast CTs (Courtesy: Kappa Electricals)

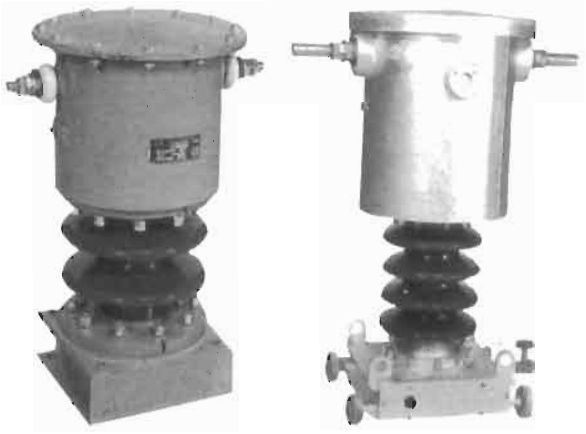

11 kV CT 33 kV CT

Figure 15.15(a) Typical outdoor-type oil-filled bar primary or wound primary HV CTs (Courtesy: Kappa Electricals)

Figure 15.15(b) 400 kV bar primary outdoor current transformer (Courtesy: BHEL)

circuit (the impedance of all the devices connected to it), expressed in ohms and power-factor or volt-amperes, at the rated secondary current. The CTs will be selected nearest to the computed total VA burden in the circuit. A CT with a higher VA burden than connected will have a slightly higher error besides size. A slightly less VA rating than the connected may normally be permissible, subject to confirmation by the manufacturer. Typical values of VA burdens at the rated current for the devices that a measuring CT may have to usually feed are as follows:

*Instruments and measuring devices**	
Moving iron ammeters	1.5 to 5 VA
Recording ammeters	2 to 10 VA
Current coils of watt-meters	5 VA
Recording watt-meters	5 VA
kWh and kVAr meters	5 VA
Thermal demand ammeters	3 VA
Thermal maximum demand ammeters	4 to 8 VA
Power factor (p.f.) meters	5 VA

---

*These values are typically for moving iron instruments and devices. For electronic instruments and devices they would be of the order of 0.1 to 0.5 VA.

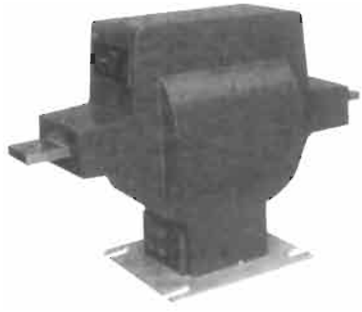

(a) Single phase HT CT

(b) HT epoxy resin cast (c) HT epoxy resin cast

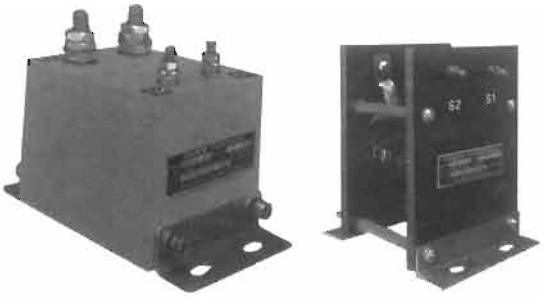

(d) LT epoxy resin cast (e) LT tape wound

Figure 15.16 Typical indoor-type wound primary CTs for measuring or protection (Courtesy: Kappa Electricals)

Protective devices In view of the large variety of these devices such as static or electromagnetic, they may be obtained from catalogues or their manufacturers.

Copper flexible leads (wires) The approximate resistances of such conductors at 20°C are provided in Table 13.15. They can be estimated at the operating temperature (90°C, as in Table 14.5 or as desired).

VA burden = I^2R

e.g. the VA burden of a CT having a rated secondary current of 5 A with the length of the 2.5 mm^2 connecting leads as 10 m.

$$\text{VA} = 5^2 \times \frac{7.6 \times 10}{1000} [1 + 3.93 \times 10^{-3} (90-20)]$$

$$= 2.42 \text{ VA} \qquad \text{(for details refer to Table 14.4)}$$

Computing the VA burden

1 The VA values of some of the devices used in the circuit may be available at a different current rating from the actual rated secondary current (1 or 5 A) chosen for the CT circuit. To compute the VA burden of a circuit when selecting the correct VA level of a CT, the VA values of all the devices not corresponding to the rated current of the circuit must be first converted to the rated current and only then added. This is essential because the VA level of a CT varies in a square proportion of the current passing through it, i.e., VA ∝ I^2. As a result, at lower operating currents its VA capacity to feed a circuit would also decrease sharply while the VA requirement of the instruments or the relays connected in the circuit will remain the same. It is therefore important that the VA level of the CT is raised in the same inverse square proportion of the current to maintain at least the same level of VA to make it suitable to activate the measuring or protective devices connected in the circuit, i.e.

$$\frac{\text{VA}_1}{I_1^2} = \frac{\text{VA}_2}{I_2^2}$$

where VA$_1$ and VA$_2$ are the VA levels of a circuit at currents I_1 and I_2 respectively.

Example 15. 2

Consider a 5 A secondary CT circuit connected to the following devices:

Device I = 0.3 VA at 1 A
Device II = 5 VA at 5 A
Device III = 7.5 VA at 5 A

Then the total burden at 5 A will be

$= 0.3 \times (5/1)^2 + 5 + 7.5$
$= 7.5 + 5 + 7.5$
$= 20$ VA

Therefore, one should select a 20 VA CT.
Similarly, if this value was required at the 1 A secondary, then the total burden would be

$= 0.3 + 5 \times (1/5)^2 + 7.5\ (1/5)^2$
$= 0.3 + 0.2 + 0.3$
$= 0.8$ VA

In this case one can select a 2.5 or 5 VA CT.

2 The current element of a relay is wound for a wide range of current settings in terms of the rated secondary current of the CT, such as 10–80% for a ground fault protection, 50–200% for an overcurrent and 300–800% for a short-circuit protection. At lower current settings, while the VA requirement for the operation of the relay will remain the same, the VA capacity of the CT will decrease in a square proportion of the current. A CT of a correspondingly higher VA level would therefore be necessary to obtain the reduced VA level,

at least sufficient to operate the relay. At a 40% setting, for instance, the CT must have a VA of $(I/0.4\ I)^2$ or 6.25 times the VA of the relay and at a setting of 20%, $(I/0.2\ I)^2$ or 25 times of the relay. Therefore when the relay setting is low this must be borne in mind and a CT of a higher VA burden be chosen. Such a consideration, however, is more pertinent in the case of electro-magnetic relays that have a high VA level than in electrostatic (electronic) relays that have a near negligible VA level at only around 0.005 VA.

Where three CTs for unrestricted or four CTs for restricted ground fault or combined O/C and G/F protections are employed in the protective circuit, the VA burden of the relay is shared by all the CTs in parallel and a normal VA CT may generally suffice. Such is the case in most of the protective schemes discussed in Sections 21.6 and 15.6.6(1), except for those employing only one CT to detect a ground fault condition, such as for a generator protection with a solidly grounded neutral (Figure 21.12).

(iv) Circuit diagram

This can be drawn along similar lines to those for a VT (Section 15.4.1(12)). Refer to the simple diagram in Figure 15.17, from which we can derive the following:

$$\overline{I'_2} = \overline{I_1} - \overline{I_{n1}} \text{ and}$$

$$\overline{I_{n1}} = \overline{I_m} + \overline{I'_m}$$

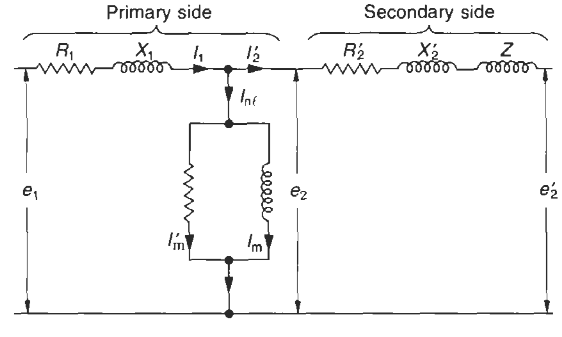

e_1 – Primary induced emf
e_2 – Secondary induced emf
e'_2 – Secondary terminal voltage
for bar primary $e_1 = e_2$
R_1 – Primary circuit resistance
R'_2 – Secondary winding resistance referred to the primary side
X_1 – Primary circuit reactance
X'_2 – Secondary winding reactance referred to the primary side
Z – Load (burden) impedance
$I_{n\ell}$ – Excitation or no load current
I'_m – Loss component supplying the hysteresis and eddy current losses to the CT core (it is the active component)
I_m – Magnetizing component producing the flux 'ϕ' (it is the reactive component)
I'_2 – Secondary current referred to the primary side

Figure 15.17 Equivalent circuit diagram of a current transformer

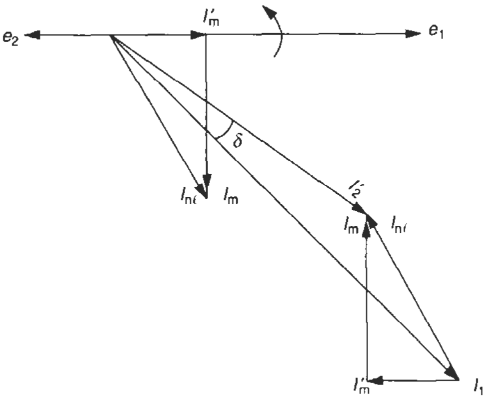

δ = Phase displacement (phase error) between $\bar{I}_1$ and $\bar{I}'_2$.

Figure 15.18 Phasor diagram of a CT

and from this is drawn the phasor diagram (Figure 15.18).

The phasor difference between $\overline{I'_2}$ and $\overline{I_1}$, i.e. $\overline{I_{n1}}$ results in a composite error I'_m. The phase displacement between $\overline{I'_2}$ and $\overline{I_1}$ by an angle 'δ' is known as the phase error. The current error will be important in the accurate operation of an overcurrent relay and the phase error in the operation of a phase sensitive relay. The composite error will be significant in the operation of a differential relay.

(v) Current error or ratio error

The error in the secondary current from the rated caused by the excitation current I_{n1} or the variation in the actual transformation ratio is expressed by:

$$\text{Current error} = \frac{(K_n \times I_2'^{*} - I_1^{*})}{I_1^{*}} \times 100\% \quad (I'_2 = K_n \cdot I_2$$

(K_n being the rated transformation ratio.))

Refer to Table 15.8 for measuring and Table 15.9 for protection CTs.

(vi) Phase error

As noted above, this is the phase displacement between the primary and the secondary current phasors. Angle δ in Figure 15.18 is generally expressed in minutes. For a perfect transformer, the direction of phasors is chosen so that this displacement is zero. Refer to Table 15.8 for measuring and Table 15.9 for protection CTs.

(vii) Composite error

Refer to the phasor diagram in Figure 15.18 and Table 15.8 for measuring and Table 15.9 for protection CTs. This error can also be expressed by

---

*Only the r.m.s. values and not the phasor quantities are considered to define the current error. The phase error is defined separately. Together they form the composite error.

Table 15.8 Limits of error for measuring CTs

Accuracy class	*± % Current (ratio) error*[a] *at % of rated primary current*					*± Phase displacement angle δ (Figure 15.18) in minutes at % of rated primary current*			
% rated. I_1	5	20	50	100	120	5	20	100	120
0.1	0.4	0.2	NA	0.1	0.1	15	8	5	5
0.2	0.75	0.35	NA	0.2	0.2	30	15	10	10
0.5	1.5	0.75	NA	0.5	0.5	90	45	30	30
1.0	3.0	1.5	NA	1.0	1.0	180	90	60	60
3.0	–	–	3	–	3	Not specified			
5.0	–	–	5	–	5	Not specified			

As in IEC 60044-1

[a] These errors are valid only when the CTs are loaded by a minimum 25% of the rated VA burden, for CTs of class 1 and 50% for CTs of classes 3 and 5 and a primary current of not less than 5% or more than 120% of the rated current. The measuring CTs may not transform correctly unless the above conditions are met.

$$\text{Composite error} = \frac{100}{I_1}\sqrt{1/T\int_0^T (K_n\cdot i_2 - i_1)^2\,\mathrm{d}t}\ \%$$

where

K_n = rated transformation ratio
I_1 = actual primary current (r.m.s.)
I_2 = actual secondary current (r.m.s.)
i_1 = instantaneous value of the primary current
i_2 = instantaneous value of the secondary current
T = duration of one cycle
= 1/50 s or 20 ms for a 50 Hz system.

Table 15.9 Limits of error for protection CTs

Accuracy class	*Current error at rated primary current* %	*Phase displacement angle δ (Figure 15.18 at rated primary current minutes*	*Composite error at rated accuracy limit primary current* %
5 *P*	± 1	± 60	5
10 *P*	± 3	–	10
15 *P*	± 5	–	15

As in IEC 60044-1

(viii) Knee point voltage

This is the point on the magnetic curve of the laminated core of the CT at which the saturation of the core will start. It is defined as the point where an increase of 10% in the secondary voltage will increase the excitation current I_{n1} by 50% (Figure 15.19). Beyond this point, a very large amount of primary current would be required to further magnetize the core, thus limiting the secondary output to a required level.

(ix) Instrument security factor (SF)

This is the ratio of instrument limit primary current to the rated primary current. Consequently a high SF will mean a high transformation of the primary current and can damage instruments connected to its secondary. For measuring instruments therefore it is kept low, as it is required to measure only the normal current and not the fault current.

15.6.2 Measuring current transformers

These are employed for the measurement of power circuit currents through an ammeter, kW, kWh or KVAr and power factor meter, or similar instruments requiring a current measurement. They must have a specified accuracy class as in IEC 60044-1 and the secondary current substantially proportional to the primary within a working range of about 5–120% of its primary rated current. They are required to commence their saturation beyond 120% of the primary rated current and saturate fully by 500%, as a system is not warranted to operate on an overload or short-circuit, and will be interrupted through its protective devices. Thus a low knee-point voltage or a low saturation level is needed to protect the connected instruments from fault currents (overcurrent factor) on the primary side. For example, in a measuring CT of 1000/5 A, the secondary current will be in direct proportion to the primary current from about 50 to 1200 A and the core will start saturating beyond 1200 A.

Overcurrent factor for instruments

As in IEC 60051, the measuring instruments are required to have an overcurrent factor of not more than 120% for two hours for instruments of all accuracy classes, 200% for 0.5 second for class 0.5 or less, and 1000% for 0.5 second for class 1 accuracy and above. Overcurrents or durations longer than this may damage the instruments.

Accuracy class

This defines the maximum permissible current error at the rated current for a particular accuracy class. The standard accuracy classes for the measuring CTs may be one of 0.1, 0.2, 0.5, 1, 3 and 5. The limits of error in magnitude of the secondary current and the phase error, as discussed in Section 15.6.1 and shown in Figure 15.18,

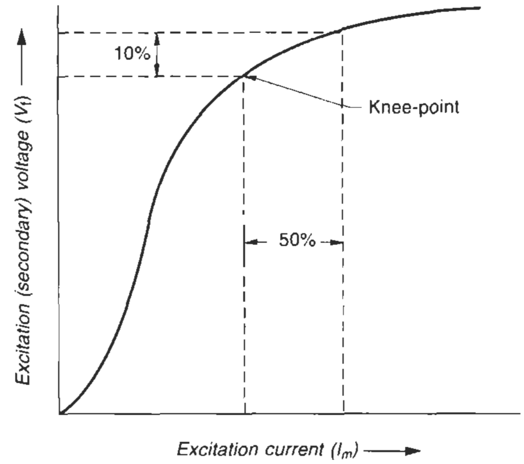

Figure 15.19 Knee point of the excitation characteristic of a current transformer

must be as in Table 15.8, according to IEC 60044-1, when the secondary burden is a minimum 25% of its rated burden for CTs up to class 1 and 50% for CTs of classes 3 and 5.

The recommended class of accuracy will depend upon the type of application and is generally as noted below:

	Application	*Class of accuracy*
1	Precision testing or laboratory testing CTs	0.1
2	Laboratory and test work in conjunction with high precision indicating instruments, integrating meters and also for the testing of industrial CTs	0.2
3	Precision industrial meters (indicating instruments and recorders)	0.5
4	Commercial and industrial metering	0.5 or 1
5	Use with indicating and graphic watt-meters and ammeters	1 or 3
6	Purposes where the ratio is of less importance	3 or 5

15.6.3 Interposing current transformers

These are auxiliary CTs, and are sometimes necessary to alter the value of the secondary of the main CTs. They help to reduce the saturation level and hence the overloading of the main CTs, particularly during an overload or a fault condition. They are used especially where the instruments to which they are connected are sensitive to overloads. They have to be of wound primary type. So that the main CTs are not overburdened they have a VA load that is as low as possible. Figure 15.20 illustrates the application of such CTs and their selection is made on the following basis:

$$VA_M = VA_C + VA_I + VA_L$$

where

VA_M = VA of the main CTs

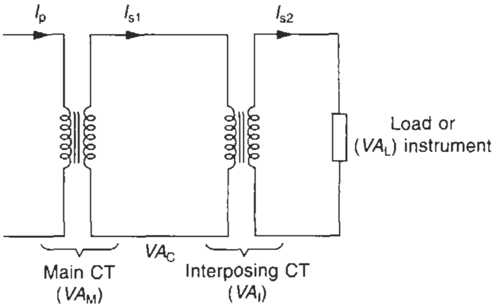

(a) Schematic diagram

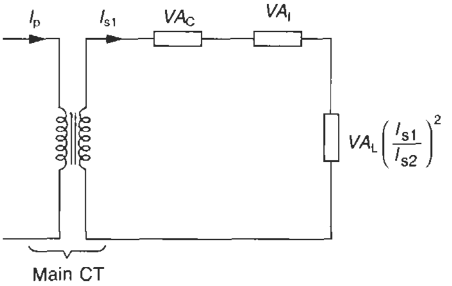

(b) Equivalent control circuit diagram

Figure 15.20 Use of interposing CTs

VA_C = circuit losses between the main and the interposing CTs at the primary rated current

VA_I = VA of the interposing CTs at the primary rated current

VA_L = VA of the load (instrument) connected on the secondary of the interposing CTs, including the connecting leads.

15.6.4 Summation current transformers

These are required to sum the currents in a number of circuits at a time through the measuring CTs provided in each such circuit. The circuits may represent different feeders connected on the same bus of a power system (Figure 15.21(a)), or of two or more different power systems (Figure 15.21(b)). A precondition for summation of currents on different power systems is that all circuits must be operating on the same frequency and must relate to the same phase. The p.f. may be different.

Each phase of these circuits is provided with an appropriate main CT, the secondary of which is connected to the primary of the summation CT. Summation is possible of many circuits through one summation CT alone per phase. The primary of summation CTs can be designed to accommodate up to ten power circuits easily. If more feeders are likely to be added it is possible to leave space for these on the same summation CT.

The summated current is the sum of all the CT secondary currents of the different circuits. The rating of the instrument connected on the secondary of the summation CT should be commensurate with the summated current. The error of measurement is now high, as the errors of all individual CTs will also add up vectorially.

Any main CT that is underloaded will also add to the error in the measurement. Similarly, if provision is made in the primary of the summation CT to accommodate future circuits but is not being utilized it must be left open, otherwise it will also add to the error. The impedance of the shorting terminals will add to the impedance of the circuit and will increase the total error.

As the currents of each circuit are summed by the summation CT, the VA burden of each main CT is also borne by the summation CT in addition to its own. The VA level of the summation CT, including its own, is shared proportionately by all the main CTs in the ratio of their primary currents. Referring to the three different circuits of Figure 15.21(b), having the ratings as shown in Table 15.10, the rating of the summation CT can be chosen as 3400/1 A. If we choose a VA level of this CT as 25 VA, making no provision for the future, then the VA burden shared by each main CT will be as calculated in the last column, ignoring the losses in the connecting leads. Based on this, the VA burden of each main CT can be decided.

15.6.5 Protection current transformers

These are employed to detect a fault, rather than measuring the current of a power system or the connected equipment. There is a fundamental difference in the requirement of a measuring and a protective transformer in terms of accuracy, saturation level and VA burden. Unlike a measuring CT, a protection CT will have a high saturation level to allow the high primary current to transform substantially to the secondary as may be required, depending upon the current setting of the protective or tripping relays. For protection CTs, therefore, the accuracy class is of little relevance up to the primary rated current, but a true reflection in the secondary is more important of a fault condition in the primary.

Corollary

Both requirements of measuring and protection cannot be met through one transformer generally. Thus two sets of transformers are required for a power circuit associated with a protection scheme, one for measurement and the other for protection.

(i) Accuracy limit primary current

This is the highest limit of the primary current that can be transformed to the secondary, substantially proportional, complying with the requirement of the composite error (Section 15.6.1). For example, a protection CT 2000/5A represented as 5P10 means that a primary current up to ten times the rated (i.e. up to 2000 × 10 A) will induce a proportional secondary current. The factor 10 is known as the accuracy limit factor as noted below.

(ii) Accuracy limit factor (ALF)

This is the ratio of the rated accuracy limit primary current to the rated primary current. For example, in the above case it is

$$\frac{2000 \times 10}{2000} = 10$$

The standard prescribed factors can be one of 5, 10, 15, 20 and 30.

(iii) Accuracy class

This defines the maximum permissible composite error at the rated accuracy limit primary current, followed by letter P for protection. The standard prescribed accuracy

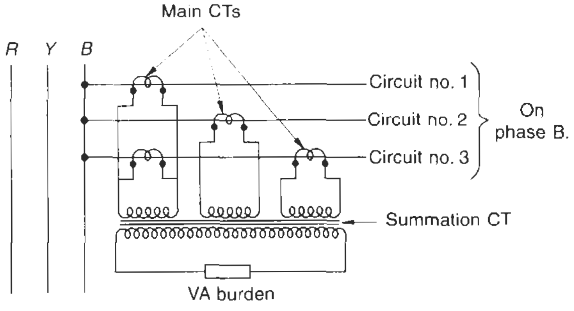

(a) Measuring the sum load of three circuits on phase B.

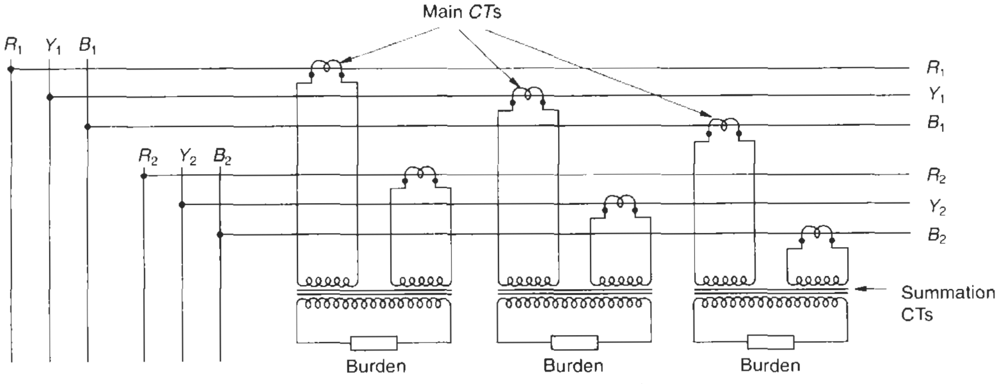

(b) Measuring the sum load of two circuits connected on different supply sources.

Figure 15.21 Application of summation CTs

Table 15.10

Circuit whose current is being summed	*Current rating*	*Main CT ratio*	*VA burden shared by the main CTs*
Circuit 1	1000 A	1000/1 A	$\frac{*25 \times 1000}{3400} \simeq 7.0$ VA
Circuit 2	800 A	800/1 A	$\frac{*25 \times 800}{3400} \simeq 6.0$ VA
Circuit 3	1600 A	1600/1 A	$\frac{*25 \times 1600}{3400} \simeq 12.0$ VA
	Total load = 3400 A	Ratio of summation CTs = 3400/1	*VA of summation CTs = 25

classes may be one of 5P, 10P and 15P. A protection CT is designated by accuracy class, followed by accuracy limit factor, such as 5P10. The current error, phase error δ (Figure 15.18) and the composite error with the rated burden in the circuit are as in Table 15.9, according to IEC 60044-1. It should be chosen depending upon the protective device and its accuracy requirement to discriminate. Closer discrimination will require more accurate CTs.

Note
An accuracy class beyond 10P is generally not recommended.

(iv) Output and accuracy limit factors

The capabilities of a protection CT are determined by the primary inputs of a CT such as the primary ampere turns AT (primary current × primary number of turns), core dimensions and the quality of laminations. All this is roughly proportional to the product of the rated output (VA) and the rated accuracy limit factor of the CT. For normal use, the product of the VA burden and the accuracy limit factor of a protection CT should not exceed 150, otherwise it may require an unduly large and more expensive CT. For example, for a 10 VA. CT, the accuracy limit factor should not exceed 15 and vice versa. The burden and the accuracy limit factor are thus interrelated. A decrease in burden will automatically increase its accuracy limit factor and vice versa. In a ring or bar primary CT, which has only one turn in the primary, the ampere turns are limited by the primary current only, thus limiting the accuracy and burden of such CTs. This is one reason why CTs of up to 50 A are generally manufactured in a wound primary design, with a few turns on the primary side to obtain a reasonably high value of VA burden and accuracy. For larger products than 150, it is advisable to use more than one protection CT, or use low secondary current CTs, i.e. 1 A instead of 5 A.

Note
For similar reasons, a measuring CT of up to 50 A primary current is recommended to be produced in a wound design.

Example 15.3
Consider a protective scheme having a total VA burden of 15 and requiring an accuracy limit factor (ALF) of 20:

$\therefore$ VA × ALF = 15 × 20 = 300

which is too large to design a CT adequately. In such cases it is advisable to consider two sets of CTs, one for those relays that are set high and operate at high to very high currents (short-circuit protection relays) and the second for all other relays that are required to operate on moderate overloads. For example, consider one set of CTs for short-circuit protection having

VA = 5

and ALF = 20

i.e. a 5P20 CT having a product of VA × ALF of not more than 150 and the other set for all the remaining protections having, say,

VA = 10

and ALF = 5

i.e. a 10P5 CT having a product of VA × ALF of much less than 150.

Note
For high set protective schemes, where to operate the protective relays, the primary fault currents are likely to be extremely high, as in the above case. Here it is advisable to consider a higher primary current than the rated for the protection CTs and thus indirectly reduce the ALF and the product of VA × ALF. In some cases, by doing so, even one set of CTs may meet the protective scheme requirement.

Example 15.4
Consider a system being fed through a transformer of 1500 kVA, 11/0.433 kV, having a rated LV current of 2000 A. The protection CT ratio on the LV side for the high set relay may be considered as 4000/5 A (depending upon the setting of the relay) rather than a conventional 2000/5 A, thus reducing the ALF of the previous example from 20 to 10. Now only one set of 15 P10 CTs will suffice, to feed the total protective scheme and have a VA × ALF of not more than 150.

Other considerations when selecting a protection CT

1. The accuracy limit factor (ALF) will depend upon the highest setting of the protective device. For a 5 to 10 times setting of the high set relay, the ALF will be a minimum of 10.
2. A higher ALF than necessary will serve no useful purpose.
3. It has been found that, except high set relays, all other relays may not require the ALF to be more than 5. In such cases it is worth while to use two sets of protection CTs, one exclusively for high set relays, requiring a high accuracy limit factor (ALF), and the other, with a lower ALF, for the remaining relays. Otherwise choose a higher primary current than rated, if possible, and indirectly reduce the ALF as illustrated in Example 15.4 and meet the requirement with just one set of protection CTs.

15.6.6 Special-purpose current transformers, type 'PS'

These are protection CTs for special applications such as biased differential protection, restricted ground fault protection and distance protection schemes, where it is not possible to easily identify the class of accuracy, the accuracy limit factor and the rated burden of the CTs and where a full primary fault current is required to be transformed to the secondary without saturation, to accurately monitor the level of fault and/or unbalance. The type of application and the relay being used determine the knee point voltage. The knee point voltage and the excitation current of the CTs now form the basic design parameters for such CTs. They are classified as class 'PS' CTs and can be identified by the following characteristics:

- CTR = I_p/I_s
- Rated test winding current
- Nominal turn ratio (the error must not exceed ± 0.25%)
- Knee point voltage (kpv) at the maximum secondary turns,

  $V_k \geq 2V_{ft}$

  where V_k = knee point voltage and
  V_{ft} = maximum voltage developed across the relay circuit by the other group of CTs during a severe most through fault.
- Maximum magnetizing (excitation) current at the voltage setting (V_{ft}) of the relay or at half the knee point e.m.f. to be ≤ 30 mA for 1 A CTs for most high-impedance schemes. The manufacturers select a proper iron core to limit this to help reduce the effective relay current setting and improve its sensitivity. Magnetizing characteristics, V_f versus I_m, (V_f being the CT secondary voltage under rated conditions), as shown in Figure 15.19, are provided by the manufacturer to facilitate relay setting.
- Maximum resistance of the secondary winding corrected to 90°C or the maximum operating temperature considered. In fact, it should be substituted by the actual operating temperature.

  We discuss below a high-impedance differential protection scheme to provide a detailed procedure to select PS Class CTs.

1 *High-impedance differential protection scheme*

The scheme primarily detects an inter-turn fault, a ground fault or a phase fault. It can thus protect a bus system and windings of critical machines such as generators, transformers and reactors in addition to a ground fault. The differential system is a circulating current system between the two winding terminals of the equipment or each section of a multi-section bus system being protected as illustrated in Figure 15.22. The scheme is based on Kirchhoff's law, which defines that the phasor sum of the currents entering a node is zero, i.e.

$$\bar{I}_1 + \bar{I}_2 + \bar{I}_3 + \bar{I}_4 = 0$$

as illustrated in Figure 15.23.

Applying this law to a three-phase, three wire system,

$$\bar{I}_R + \bar{I}_Y + \bar{I}_B = 0$$

and to a three-phase four-wire system

$$\bar{I}_R + \bar{I}_Y + \bar{I}_B + \bar{I}_n = 0$$

When a three-phase four-wire system feeds non-linear or single-phase loads this balance is upset and the unbalanced current flows through the neutral. The same relationship can be expressed as

$$\bar{I}_R + \bar{I}_Y + \bar{I}_B = \bar{I}_n.$$

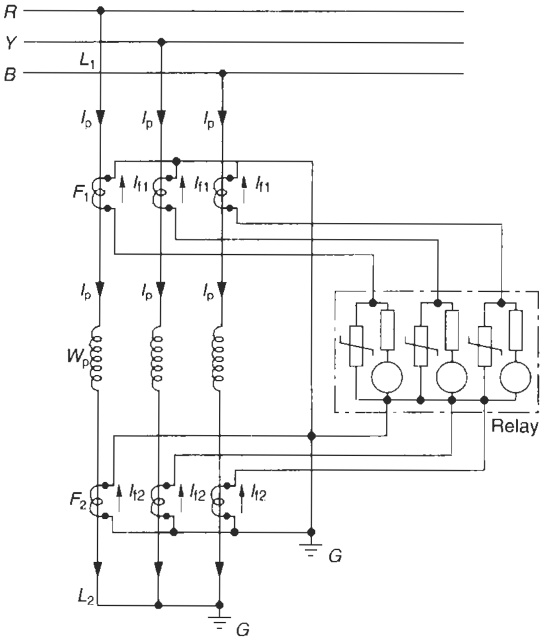

F_1, F_2 – 2 sets of identical class PS CTs
Relay – High impedance three element differential protection relay
W_p – Windings of a power equipment or section of a power system to be protected

Figure 15.22 A circulating current scheme to provide a phase and a ground fault differential protection

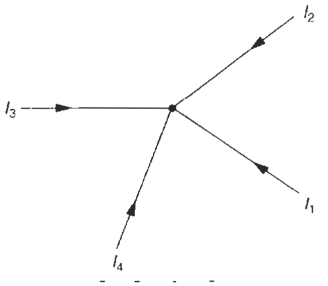

$\bar{I}_1 + \bar{I}_2 + \bar{I}_3 + \bar{I}_4 = 0$

Figure 15.23 Kirchhoff's law – sum of currents entering a node is zero

Similarly, the balance is disturbed in the differential scheme on a fault of any type and a spill current, which is the difference between the currents drawn by the two sets of CTs, flows through the relay. Since the scheme functions on the principle of balance of currents, it is imperative that the two sets of CT parameters, such as their ratio, secondary resistance and the magnetizing current, should be identical, except for the permissible tolerances as discussed in Section 15.10.2. The secondary lead resistances, from the CTs to the relay terminals, should also be the same, otherwise, spill currents may flow through the relay, even under healthy condition and cause an unwanted trip, or require a higher minimum setting of the relay. A higher setting of the relay may jeopardize its sensitivity to detect minor faults. Since it is not practical to produce all CTs to be identical, small spill currents under healthy condition are likely and the minimum relay setting, I_{st}, must account for this. Below we consider three different cases to explain the principle of circulating currents, along with the procedure, to select the CTs and carry out the relay setting.

Equivalent circuit diagram and selection of class PS CTs

Refer to the control circuit diagram of Figure 15.24, drawn for the scheme in Figure 15.22. It is drawn on a single-phase basis for ease of illustration, where

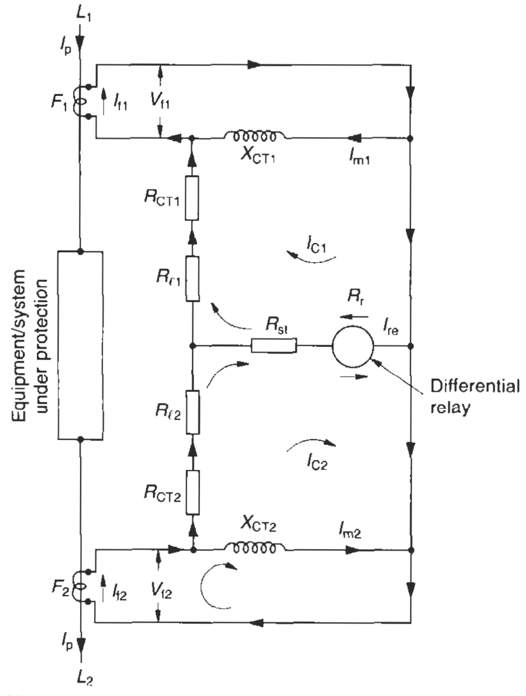

(1) Healthy condition, $I_{re} = I_{c2} - I_{c1} = 0$

Figure 15.24 Equivalent control circuit diagram for a differential ground fault protection scheme of Figure 15.22

$I_{f1}, I_{f2} = I_f$ = CT secondary currents

$I_{m1}, I_{m2} = I_m$ = CTs' excitation currents (these will vary with the CT secondary voltage; refer to Figure 15.19)

$I_{c1}, I_{c2} = I_c$ = circulating currents

I_{re} = spill or differential current through the relay

$V_{f1}, V_{f2} = V_f$ = CT secondary voltages under rated conditions (these relays are defined by both the current and the voltage settings)

R_r = resistance of the relay coil

$= \dfrac{VA}{I_{st}^2}$ where VA is the burden of the relay. This may be specified in terms of its current rating 1 A or 5 A or setting current I_{st}. Considering this to be 1 VA relay at a setting of 0.05 A,

$$R_r = \frac{1}{(0.05)^2} = 400\ \Omega$$

I_{st} = relay setting

$R_{l1}, R_{l2} = R_l$ = maximum resistance of the connecting leads from the CT terminals to the relay terminals. For calculating this, for an estimated length and size, refer to cable data in Table 13.15

$X_{CT1}, X_{CT2} = X_{CT}$ = equivalent excitation reactances of the CT secondary windings. In ring-type CTs, they are generally very low and can be ignored for ease of derivation

$R_{CT1}, R_{CT2} = R_{CT}$ = equivalent resistances of the CT secondary windings

Healthy condition
Refer to Figure 15.24:

$$I_{f1} = I_{m1} + I_{c1}$$

$$I_{f2} = I_{m2} + I_{c2}$$

and $V_{f2} = (I_{f2} - I_{c2}) \cdot X_{CT2}$

$$= I_{c2}(R_{CT2} + R_{l2}) + (I_{c2} - I_{c1})\,(R_{st} + R_r)$$

The two current through the relay are in opposite directions therefore

$I_{re} = I_{c2} - I_{c1}$

$= (I_{f2} - I_{m2}) - (I_{f1} - I_{m2})$

Under healthy conditions

$I_{f1} = I_{f2}$

and $I_{m1} = I_{m2}$

$\therefore$ $I_{re} = 0$

Strictly speaking, these are all phasor quantities but only their magnitudes are considered for ease of illustration, as quantities of similar parameters such as I_{f1}, I_{f2} and I_{m1}, I_{m2} fall almost in phase with each other.

Hence, in a healthy condition there will be no spill current through the relay and it will stay inoperative.

Through-fault condition
Refer to Figure 15.25(a). On a fault occurring outside the protected zone, all the CTs that fall in parallel will

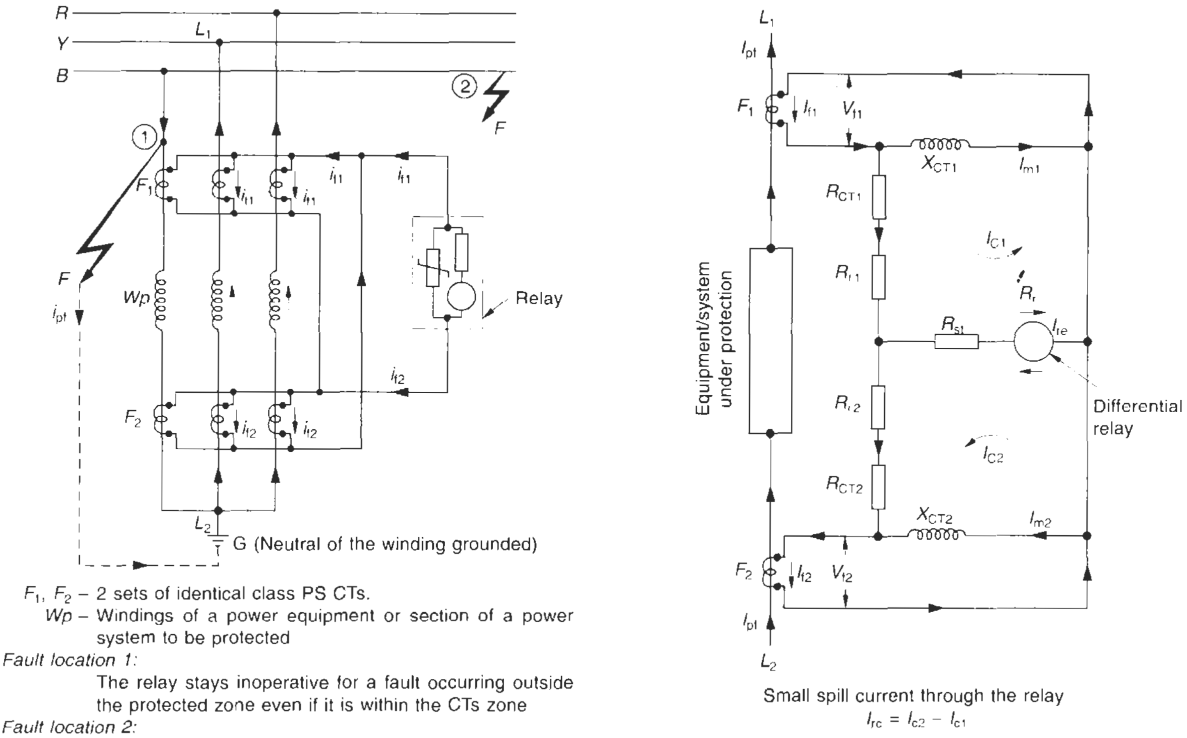

F_1, F_2 – 2 sets of identical class PS CTs.
Wp – Windings of a power equipment or section of a power system to be protected
Fault location 1:
The relay stays inoperative for a fault occurring outside the protected zone even if it is within the CTs zone
Fault location 2:
It falls outside the CTs zone.

(a) Principle of operation

Small spill current through the relay
$I_{rc} = I_{c2} - I_{c1}$

(b) Control circuit diagram

Figure 15.25 A through-fault condition outside the protected zone in a differential scheme

share the fault almost equally, depending upon the location of the fault and the impedance of each CT circuit up to the point of fault. The balance of the CTs secondary currents is therefore disturbed, but only marginally, as the polarities of the two sets of CTs also fall in opposition and neutralize most of the unbalanced current $(I_{c2} - I_{c1})$ through the relay. The small spill currents may be taken care of by the minimum setting of the relay to avoid a trip in such a condition. Hence, the relay may remain inoperative on a moderate fault, as illustrated in Figure 15.25(b).

But this may not always be true, as it is possible that one or more CTs in the faulty circuit may saturate partially or fully on a severe through-fault and create a short circuit $(V_{f2} = 0)$ across the magnetizing circuits of all the CTs that are saturated. Refer to Figures 15.26(a) and (b). The CTs' resistances, however, will fall across the relay circuit. Assuming that the other sets of CTs in the circuit remain functional, this would cause a severe imbalance and result in a heavy unbalanced current through the relay and an unwanted trip. Under such a condition,

$$V_{ft} = i_{sc}\ (R_{ct} + R_l)$$

where

V_{ft} = maximum voltage that may develop across the relay circuit by the other groups of CTs during a severe through-fault.

i_{sc} = maximum fault current through the secondary of the CTs, on a severe through-fault. This may correspond to the fault level of the machine or the system being protected, depending upon the machine or the system impedances that may fall in the faulty circuit.

The protection must be designed to remain inoperative in such a fictitious fault condition. This condition will also determine the stability limit of the protection scheme and can be considered as the minimum voltage setting of the relay. In fact, this setting will have a sufficient safety margin, as the knee point voltage, V_k, of the CTs is considered quite high, of the order of $V_k \geq 2V_{ft}$ on the one hand, and the saturation of the CTs is possible only under extreme conditions, on the other. Hence the level of V_{ft} developed by the CTs may not be as high as thought and when the relay is set at this voltage it will provide sufficient stability.

Note
It is advisable to choose the CTs with low secondary current, say, at 1 A, to permit a lower relay setting for the voltage and the current trip coils. The reduced voltage across the relay will also improve the stability level of the protection scheme.

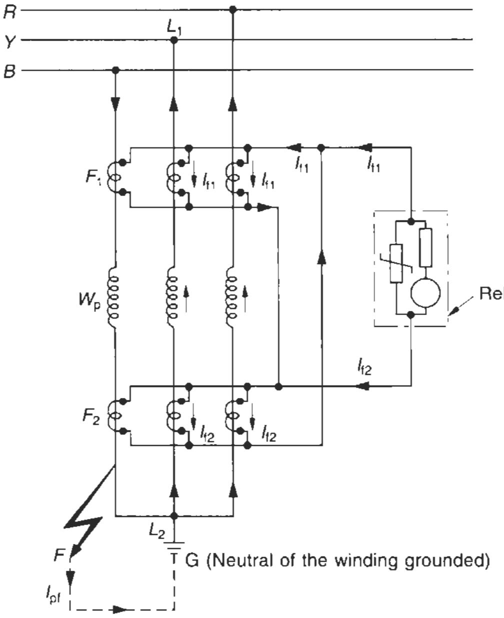

(a) Power circuit

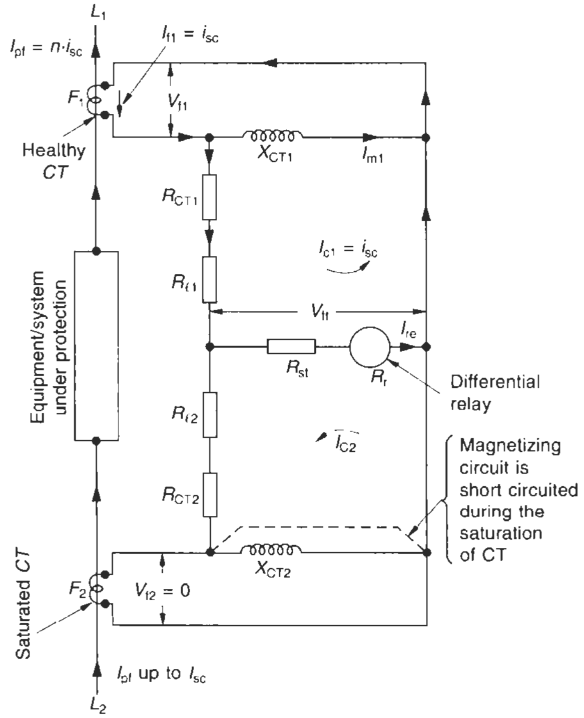

$V_{f1} = i_{sc} (R_{CT} + R_\ell)$

I_{sc} = Fault level of the equipment under protection

(b) Control scheme

Figure 15.26 Power circuit and control scheme during a very severe external fault condition

Sensitivity

This is the ability of the scheme to detect the weakest internal fault.

Stability

This can be defined by the most severe external fault at which the scheme will remain inoperative. It should also remain inoperative in healthy conditions. That is it should be immune to the momentary voltage or current transients and normal harmonic contents in the circulating current. Series LC-filter circuits are generally provided with the relay coil to suppress the harmonics and to detect the fault current more precisely.

Use of stabilizing resistance

It is possible that the voltage V_{ft} may become sufficiently high to cause a spill current on a through-fault higher than the relay pick-up current, I_{st}. To ensure that no spill current higher than the relay setting, I_{st}, will flow through the relay circuit under a through-fault condition, the impedance of the relay circuit is raised substantially. It can be obtained by using a stabilizing resistance, R_{st}, such that the differential circuit will act like a high-impedance path for this spill current, compared to the very low magnetizing impedance of the saturated CT. This resistance is shown in Figure 15.26(b). It will allow a current of less than the relay pickup current, I_{st}. To fulfil this condition, the impedance of the differential circuit must be a minimum to ensure

$$(R_r + R_{st}) \ge \frac{V_{ft}}{I_{st}}$$

The normal practice is to choose R_{st} based on the setting voltage required. In the above equation, V_{ft} is the minimum voltage required across the relay branch ($R_r + R_{st}$) for pushing a current equal to I_{st} to ensure that the relay stays immune on a through-fault. During an internal-fault, the fault current is much more than I_{st}, and hence it is easy to detect. The equation also implies that R_{st} is chosen high to limit the relay current during a through-fault (assuming that one of the CTs is fully saturated) to less than its pickup current. Solving the above equation for R_{st},

$$R_{st} \ge \frac{V_{ft}}{I_{st}} - R_r \text{ or } \frac{V_{ft}}{I_{st}} - \frac{VA}{I_{st}^{2*}}$$

Since the additional resistance will stabilize the protective scheme during a maximum through-fault condition without raising the relay setting, I_{st}, it is appropriately termed the stabilizing resistance. Figure 15.27 shows an arrangement in a relay circuit and for the purpose of illustration, it is shown separately in various control circuits (Figures 15.24, 15.25(b) and Figure 25.26(b)).

As standard practice, this resistance is supplied with the relay by the relay manufacturer. It is of variable type, to suit system conditions and the actual fault level. The

---

*This is relay-specific. The manufacturer may specify *VA* corresponding to its rated current of 1 A or 5 A or setting current I_{st}.

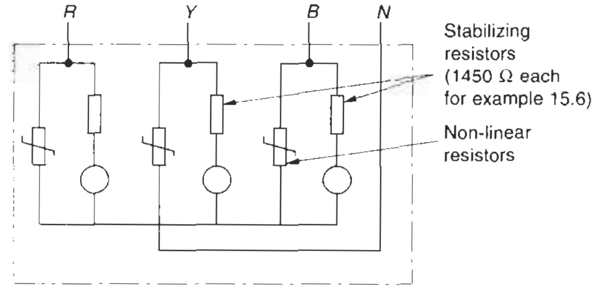

Figure 15.27 Three-element high-impedance circulating current relay scheme

maximum value of the stabilizing resistance to be supplied will depend upon the type of protection (ground or phase or both) and the relay setting. Generally, it may vary from 50 to 1500 Ω.

Fault within the protected zone

Refer to Figure 15.28(a). The balance of the two sets of CTs is disturbed again. The CTs now have the same polarity and currents as the two sets add up to cause a high-imbalance spill current through the relay. Referring to Figure 15.28(b),

$$\left.\begin{aligned} I_{re} &= I_{c1} + I_{c2} = (I_{sf2} - I_{m2})\\ &\qquad + (I_{sf1} - I_{m1})\\ &= I_{sf2} + I_{sf1} - 2I_{m} \end{aligned}\right\} \text{These are all phasor quantities, but considered linear, for ease of illustration and without much error}$$

The additive characteristic of the scheme now has high stability and prevents the relay from operating on moderate external faults, while it is sensitive to small spill currents for all internal ground and phase faults, including winding faults.

2 *Current setting of the relay*

The relay has voltage as well as current settings. The former defines the stability limit against through-faults, as discussed above, while the latter determines the sensitivity of the protected zone.

If I_{pf} = minimum fault current through the primary (chosen on the basis of the rated full-load current of the machine or the system being protected) required to trip the relay. It may be termed the minimum primary operating current (POC) of the scheme. I_{pf}, In terms of the secondary
= $n \times I_{sf}$
n = turn ratio of the CTs
I_m = corresponding to the V_{ft}, to account for the most severe through-fault
I_{st} = relay current setting, i.e. minimum spill current required to operate the relay

Then

$$\bar{I}_{st} = \bar{I}_{m} + \bar{I}_{st}$$

Since on a fault the p.f. is low (Section 13.4.1(5)) all

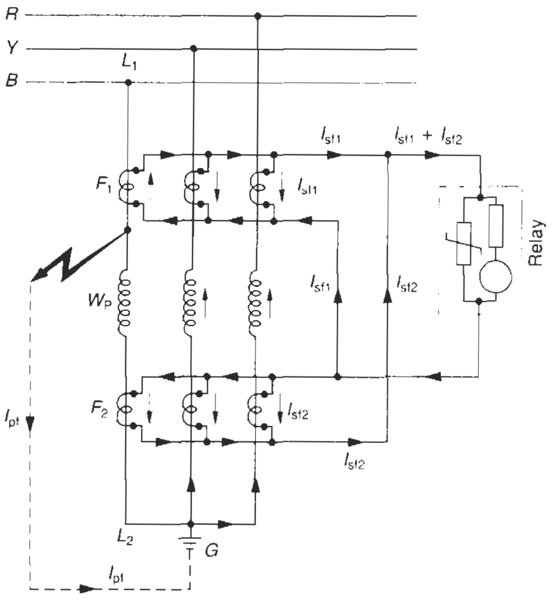

Relay – High impedance differential protection relay. It operates for the fault occurring within the protection zone
I_{pf} – Fault current through ground for fault on phase B

(a) Power circuit

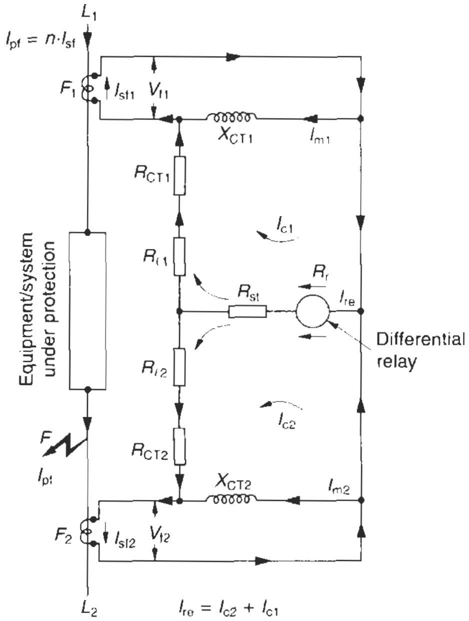

(b) Control scheme

Figure 15.28 Fault within the protected zone these quantities may be considered in phase with each other, with little error.

$\therefore\ I_{sf} = I_m + I_{st}$

If there are N number of CTs connected in parallel, the magnetizing current will flow through all of them. In a GF protection scheme all the three CTs of all the feeders being protected together will fall in parallel, while in case of a combined GF and phase fault protection scheme, only one third of these CTs will fall in parallel. The CT in the faulty circuit must be able to draw enough current to feed the magnetizing losses of all the CTs falling in parallel and the relay pickup current, I_{st}. The sensitivity of the differential scheme can therefore be expressed more appropriately as

$I_{sf} = N \times I_m + I_{st}$

(N being the number of CTs falling in parallel) and in terms of the primary

$$I_{pf} = n\ (N \times I_m + I_{st}) \qquad (15.1)$$

Since it determines the sensitivity level of the protection scheme, it must be kept as low as possible to detect even a small fault. To achieve a high degree of sensitivity it is therefore essential

- To have the CTs with a low I_m
- To keep the number of CTs in parallel as small as possible, suggesting protection of individual feeders, rather than many feeders together, particularly when the equipment is critical and requires a higher level of sensitivity for adequate protection.

As the relay will have only one current setting for all types of faults, it is recommended to keep it around 20–40% of the rated current of the machine or the system being protected. This setting will be sufficient to meet the CT's magnetizing current requirements and also trip the relay.

For a ground fault scheme, it is recommended to consider a still lower setting to ensure effective detection of the ground fault current and rapid disconnection of the machine or the bus system being protected. A lower setting may be desirable as the actual ground fault current may already be larger than is being detected by the relay due to a higher impedance of the ground loop than assumed previously.

As a rule and as recommended by IEC 60255-6, the POC may be chosen within 30% of the minimum estimated ground fault current. When the scheme is required to detect only a ground fault, a single-pole relay is connected between all the CTs' shorted ends (Figure 15.29). All the CTs now fall in parallel.

When the scheme is required to detect the ground fault as well as the phase faults, a triple-pole relay is used, each pole of which is connected between the shorted terminals of the two same phase CTs and the neutral formed by shorting the other terminals of all the CTs, as shown in Figure 15.22. The setting of all the poles is kept the same. In other words, the sensitivity level remains the same for all types of faults.

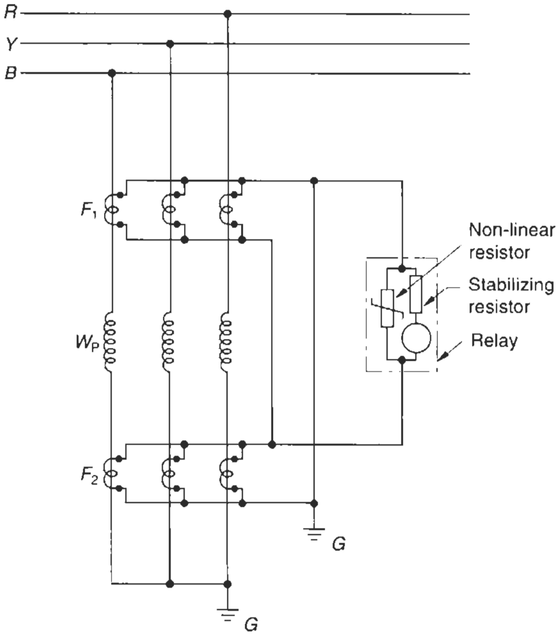

Relay – High impedance single element ground fault differential protection relay

Figure 15.29 Scheme for only ground fault differential protection

In the case of overcurrent and ground fault protection it becomes much higher than in a single-pole relay. Now the requirement of the minimum primary operating current, I_{pf} (equation (15.1)), which is a measure of sensitivity, is greatly reduced. The CT on the faulty phase has to feed only one third of the CTs that fall in parallel of each relay coil rather than all the CTs, that fell in parallel in ground fault protection using only a single-pole relay.

The CTs are designed for the worst conditions of fault, even when the scheme is designed to detect only a ground fault. This may be a phase to phase and ground fault, causing a severe unbalance. The iron core of such CTs must therefore possess near-linear magnetizing characteristics, to the extent of the fault level of the machine or the system being protected. This is to achieve a near-replica of the magnitude of the fault in the secondary, which may be 15 to 20 times or more of the rated current. In generators, it can increase to $21 \cdot I_r$ (Section 13.4.1(5)). For the CTs, a saturation level sufficient to transform the maximum primary fault condition to the secondary is therefore considered mandatory to ensure that the CTs do not saturate during the most severe fault condition, and render the tripping scheme erratic. This also ensures better stability of the relay, particularly during severe most through-fault conditions (outside the CTs' detection zone) such as a bus fault, as illustrated in Figure 15.30. It is normal practice to define the secondary voltage of the CTs by its knee point voltage (kpv), V_k. This voltage will depend upon the type of relay, its VA burden and the required stability of the system. It is common practice to make this at least twice the relay setting voltage on the most severe through-fault, i.e. $V_k \geq 2V_{ft}$.

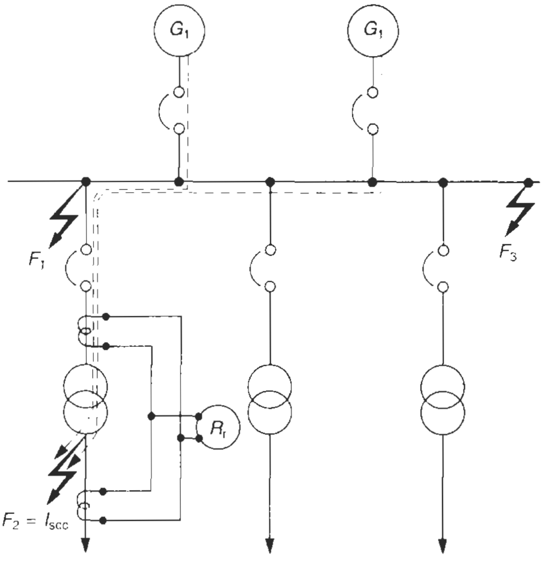

F_1, F_3 ----→ Through faults which may be much higher than at F_2 but outside the CTs' zone

F_2 ----→ Internal fault being fed by two sources although limited by the equipment impedance

Figure 15.30 An internal fault being fed by more than one source

The most severe fault is the capacity of the machine or the system being protected to feed the fault, and is determined by its fault level as indicated in Tables 13.7 and 13.10. To consider a higher fault level than this, such as of the main power supply, is of little relevance as it would fall outside the detection zone of the CTs and would serve no useful purpose except to further improve the stability level of the protective scheme.

Applying this scheme to system protection, where the number of circuits and hence the number of CTs are high, will mean a high POC (equation (15.1)). A high POC may not be desirable, as it may underprotect the system. In such cases, it is advisable to divide the system into more than one circuit and apply the scheme individually to all such circuits (Example 15.6).

3 *Suppressing system harmonics*

Such relays are normally instantaneous, highly sensitive and operate at low spill currents. Since they detect the residual current of the system, the current may contain third-harmonic components (Section 23.6) and operate the highly sensitive relay in a healthy condition. To avoid operation of the relay under such conditions, it is a normal practice to supply the relay coil with a tuned filter, i.e. a series L-C circuit to filter out the third-harmonic components. The capacitance of the filter circuit may also tame a steep rising TRV (Section 17.10.3) during a momentary transient condition and protect the relay.

4 *Limiting the peak voltage*

As this is a high-impedance scheme, it can result in very high voltages across the CTs and the relay, particularly during internal faults, when the CTs have the same polarity and the spill currents are additive. As in IEC 60255-6, it must be limited within 3 kV across the relay circuit to protect the CTs and the relay. An approximate formula to determine the likely peak voltage across the relay circuit is given by

$$V_p = 2\sqrt{2}\ \sqrt{V_k\,(V_m - V_k)} \tag{15.2}$$

where V_p = peak voltage across the relay and

V_m = theoretical maximum CT secondary voltage across the relay circuit at the maximum internal fault current. (The maximum internal fault current is the level of fault of the machine or the system under protection.) This must also take into account any other supply sources that may also feed the fault, such as more than one supply bus, as shown in Section 13.4.1(5) and Figure 13.18, and illustrated in Figure 15.30. If the cumulative fault current is I_{SCC}, then the maximum CT secondary voltage will be

$V_m = I_{SCC} \times$ impedance of the relay circuit.

This can be limited by using a non-linear resistance called Metrosil* across the relay, as shown in Figure 15.27. If voltage reaches a dangerous level, this resistance will provide a low-resistance parallel path to the current and limit the voltage across the relay to about 1 kV. The current I through the non-linear resistance is given by

$V_m = K \times I^{\beta}$ (K and β are constants)

All these values are provided by the relay supplier when this resistance becomes necessary.

5 I *Selecting class PS CTs*

Ground fault protection of a machine and setting of the relay. The following example illustrates the procedure to select class PS CTs for a typical G/F scheme. In practice, this scheme would be more appropriate for phase and ground fault protections, as illustrated in Figure 15.22.

Example 15.5

Consider a generator, 10 MVA, 3.3 kV, for ground fault protection having a sub-transient reactance $x''_d = 12 \pm 10\%$ (Figure 15.29).

Grounding method:	solidly grounded
Overload capacity:	150% for 30 seconds (as in IEC 60034-1)
Relay type:	differential
Rating:	1 A
VA:	1, at the setting current, I_{st}

---

*This is a brand name given by the manufacturer of the non-linear resistor, a GEC group company in the UK. General Electric, USA call it Thyrite, and similar names have been given to it by different manufacturers. Basically, it is a SiC non-linear resistance to provide the desired overvoltage protection. Refer to Section 18.1.1 for more details.

$$I_r = \frac{10 \times 10^3}{\sqrt{3} \times 3.3}$$

$$= 1750 \text{ A}$$

The fault level of the system,

$$I_{sc} = 1750 \times \frac{100}{10.8} \text{ (equation (13.5))}$$

$$= 16.20 \text{ kA}$$

(Assume a lower value of x''_d (12 – 1.2 = 10.8%) to be on the safe side.)

Consider CTs with a ratio of 2000/1 A and having $R_{ct} = 7\ \Omega$ and the magnetizing chracteristics as in Figure 15.31. Consider a lead resistance from CT terminals to the relay to be 0.5 Ω per lead.

∴ Total lead resistance, $R_1 = 2 \times 0.5$

$= 1\ \Omega$ (presuming this to be at the operating temperature)

Fault current in terms of the secondary,

$$i_{sc} = 16200 \times \frac{1}{2000} = 8.1 \text{ A}$$

1 Relay voltage setting (stability limit)

$V_{ft} = i_{sc}(R_{CT} + R_1)$ (considering the resistances at the operating temperature)

$$= 8.1\ (7 + 1)$$

$$= 64.8 \text{ V}$$

say, 65 V or nearest higher setting available on the relay.

∴ Minimum kpv, $V_k = 2 \times 65$

$$= 130 \text{ V}$$

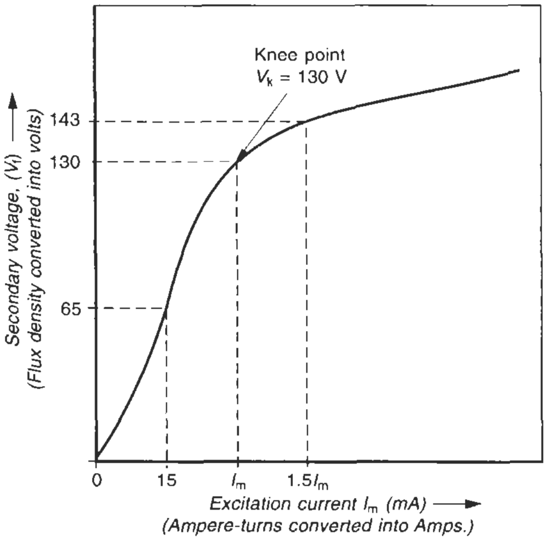

$R_{CT} = 7\ \Omega$
Core material – CRGO silicon steel

Figure 15.31 Assumed magnetizing characteristic of 2000/1 A class PS CTs

2 Relay current setting

Considering a ground circuit resistance of, say, 2 Ω:

$$\therefore\ I_g = \frac{3.3 \times 1000}{\sqrt{3} \times 2}$$

where I_g is the ground fault current

$$= 952.6 \text{ A (say 950 A)}$$

Let us consider a setting of, say, 30% of I_g:

$$\therefore\ I_{pf} = 0.3 \times 950$$

$$= 285 \text{ A}$$

Referring to Figure 15.28(a) the number of CTs that will fall in parallel,

$N = 6$

and I_m corresponds to the relay voltage setting of 65 V from the curve of Figure 15.31 = 15 mA.
From equation (15.1)

$$285 = 2000\ (6 \times 0.015 + I_{st})$$

$$\therefore\ I_{st} = \frac{285}{2000} - 6 \times 0.015$$

$$= 0.1425\ - 0.09$$

$$= 0.0525 \text{ A}$$

Therefore the relay can be set between 5–7.5% of 1 A.

3 Stabilizing resistance

Total desired relay circuit impedance

$$R_z = \frac{V_{ft}}{I_{st}}$$

$$= \frac{65}{0.0525} = 1238\ \Omega$$

Relay resistance

$$R_r = \frac{VA}{I_{st}^2} = \frac{1}{(0.0525)^2}$$

$$\simeq 363\ \Omega$$

∴ Required stabilizing resistance

$R_{st} = 1238 - 363 = 875\ \Omega$

4 Peak voltage across the relay circuit

$$V_p = 2\sqrt{2}\sqrt{V_k\,(V_m - V_k)} \qquad (15.2)$$

where $V_m = i_{sc} \times R_z$ (considering that there are no other feeds to the generator internal fault from other sources)

$$= 8.1 \times 1238$$

$$= 10{,}027.8 \text{ V}$$

$$\therefore\ V_p = 2\sqrt{2}\sqrt{130(10{,}027.8 - 130)}$$

$$= 3208 \text{ V}$$

which is a marginal case. It is, however, advisable to provide a non-linear resistance.

5 Specification for class PS CTs

CTR = 2000/1

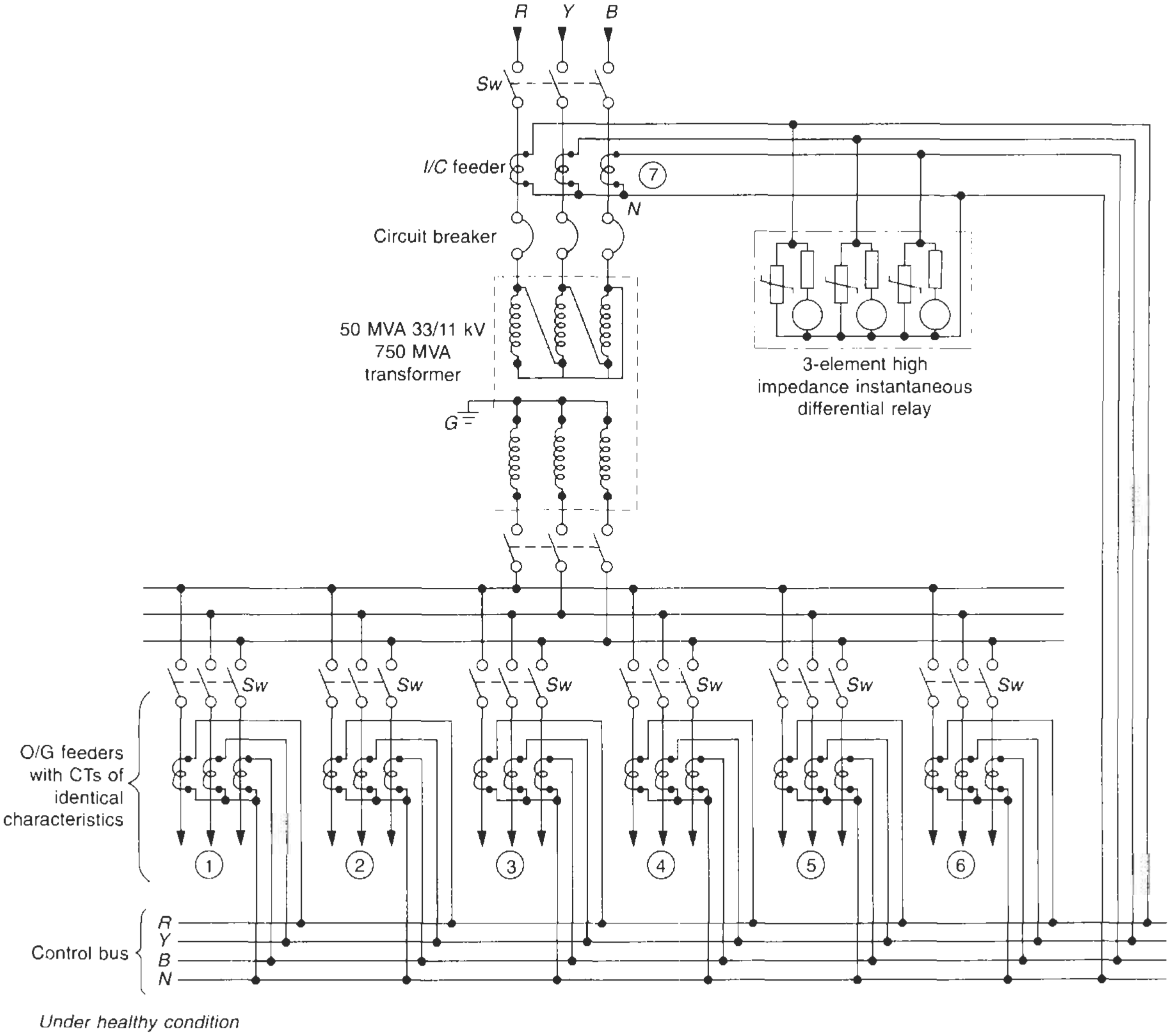

Figure 15.32 Phase and ground fault differential protection scheme for a transformer and feeder bus protection

Quantity = 6 numbers
$V_k \geq 130$ V
I_m = maximum 15 mA at a $V_k/2$ of 65 V.

The CT manufacturer must provide the user with the magnetizing characteristics of the CTs, i.e. I_m versus V_f.

II *Protection of a feeder circuit*

Example 15.6
Consider a power distribution system as shown in Figure 15.32, where a transformer of 50 MVA, 33/11 kV, having a fault level of 750 MVA, is feeding a bus connected to six feeders of different ratings. All the CTs for a combined phase and ground fault may be connected in parallel as illustrated. The CTs on the primary side of the transformer will be similar to those on the outgoing feeders, except for the insulation system and the turn ratio, to provide identical secondary current and magnetizing characteristics, as on the secondary side of the transformer. The relay may be set for a slightly higher value to account for the slight error introduced and the consequent spill currents to avoid an unwanted trip.

$$I_r = \frac{50 \times 10^3}{1.732 \times 11}$$

$$= 2625 \text{ A}$$

Consider a reasonably low value of I_{pf}, say, 25% of I_r, to achieve a high level of sensitivity and still feed the I_m to all the

$$\frac{21}{3} = 7 \text{ CTs}$$

$$\therefore\ I_{pf} = 0.25 \times 2625$$

$$= 656.25 \text{ A}$$

Assume the CTs on the secondary side of the transformer to be 3000/1 and on the primary to be

$$\frac{3000}{1} \times \frac{11}{33} \text{ or } \frac{1000}{1} \text{ A}$$

and their magnetizing characteristics as in Figure 15.33.

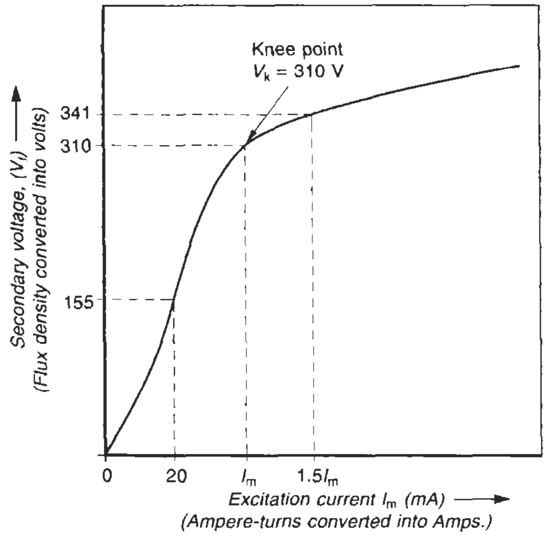

Figure 15.33 Assumed magnetizing characteristic of 3000/ 1 A class PS CTs

For all the CTs let R_{ct} = 10 Ω and lead resistance

$R_l = 0.75 \times 2 = 1.5\ \Omega$

The fault level of the system

$$I_{sc} = \frac{750}{1.732 \times 11}$$

= 39 (say 40 kA)

and in terms of the secondary

$$i_{sc} = 40 \times \frac{10^3}{3000} \times 1$$

= 13.3 A

1 Relay voltage setting (stability limit)

V_{ft} = 13.3 (10 + 1.5) (considering the resistance at the operating temperature)

= 152.95 V

say, 155 V or nearest higher setting available on the relay.

∴ Minimum kpv, $V_k = 2 \times 155$

= 310 V (Figure 15.33)

2 Relay current setting

I_{pf} = 656.25 A

I_m at 155 V = 20 mA from the curve of Figure 15.33

∴ 656.25 = 3000 (7 × 0.02 + I_{st})

or $$I_{st} = \frac{656.25}{3000} - 7 \times 0.02$$

= 0.0788 A

Therefore, the relay can be set, say, at 10% of 1 A.

The scheme is suitable to detect both a ground fault and a phase fault.

3 Stabilizing resistance

Relay circuit impedance, $R_z = \frac{155}{0.1}$

= 1550 Ω

Relay resistance, $R_r = \frac{1}{0.1^2}$

= 100 Ω

(for the same relay as in the earlier example)

∴ Required stabilizing resistance,

R_{st} = 1550 − 100 = 1450 Ω

4 Peak voltage across the relay circuit

V_k = 310 V

$V_m = i_{sc}\, R_z$

= 13.3 × 1550

= 20,615 V

∴ $V_p = 2\sqrt{2}\sqrt{310(20{,}615 - 310)}$

= 7095 V

which is more than 3 kV. Hence, a non-linear resistance will be necessary across the relay branch and must be ordered from the manufacturer with the relay.

5 Specification for class PS CTs

CTs : 33 kV

CTR = 1000/1 A Qty 3 numbers

CTs : 11 kV

CTR = 3000/1 A Qty 21 numbers

$V_k \geq 310$ V

I_m = as low as possible, but not more than 20 mA at 155 V. The CT manufacturer must provide the magnetizing characteristics.

Notes

1 In the above case the incoming feeder would trip, even when the fault occurs in any of the outgoing feeders, which may not be desirable. It is therefore recommended that this scheme be applied to individual feeders, so that in case of a fault, only the faulty feeder is isolated rather than the whole system.

2 With the relay one should also order from the manufacturer
   (a) Stabilizing resistance of 1450 Ω and
   (b) A non-linear resistance to discharge the excess induced e.m.f., across the relay circuit.

   Both these resistances are illustrated in Figure 15.27.

15.6.7 Core-balanced current transformers (CBCTs)

These are protection CTs and are used for ground leakage protection. They are also a form of summation CTs, where the phasor sum of the three phase currents is measured. The phasor difference, if any, is the measure of a ground leakage in the circuit. They are discussed in Section 21.5.

15.7 Short-time rating and effect of momentary peak or dynamic currents

The normal practice of users when selecting a measuring or a protection CT has been to specify only the current ratio and the likely maximum VA burden it may have to feed as well as the class of accuracy for metering and accuracy limit factor.

Fault level is normally not mentioned, nor is it requested by the CT manufacturer. Generally, it should be sufficient to meet the likely fault level of the system and its duration in most cases, particularly on an LT system. For critical installations, large feeders and all HT systems, however, it is recommended to check the suitability of the CTs for the system fault level and its duration.

A short-circuit on a system will cause overheating as a result of the short-time current, I_{sc}, and its duration of 1 or 3 seconds, according to the system requirements and its protective scheme. It will also develop electrodynamic forces (equation (28.4)) as a result of the momentary first peak of the fault current (in CTs it is 2.5 times the short-time current, I_{sc}, as in IEC 60044-1; see also Table 13.11). These forces may result in electrical as well as mechanical damage to the windings of a CT depending upon the number of turns in the primary winding and the configuration of the coil. For bar primary CTs, having only one turn in the primary, such forces are the least, hence the statement above. With a lower class of accuracy, a low VA level, and a lower accuracy limit factor (for protection CTs) a CT can easily be built to be mechanically rugged. But higher requirements of such parameters may necessitate a bulky CT, disproportionate in size and cumbersome to install.

In most applications, a bar primary CT is generally used and a normal CT may be suitable. But for too small ratings, where the use of a wound primary CT is imperative, short-circuit effects must be considered, except the CTs for an LT system, where the fault level for such small ratings may be very low and may not matter (Section 13.4.1(5)). For applications on an HT system, where a wound primary CT is imperative, choice of a CT from standard wound primary CTs may still be possible, meeting the minimum requirements of class of accuracy, VA burden and short-time rating. IEC 60044-1 indicates for measuring and protection CTs the maximum short-time factors (STF) that can be obtained economically for a normal wound primary CT where

$$\text{Short-time factor (STF)} = \frac{\text{Rated short-time current}}{\text{Rated primary current}}$$

$$= \frac{I_{SC}}{I_r}$$

Some STFs for more important CTs are reproduced in Table 15.11.

Table 15.11 Maximum short-time factors obtainable economically corresponding to rated output, accuracy class, accuracy limit factor and rated short-time for wound primary current transformers

Accuracy class	*Rated output VA*	*STF obtainable, corresponding to the rated short times up to*		
		0.5 s	1.0 s	3.0 s
(A) Measuring CTs				
0.5	2.5	1100	775	450
	5	750	**525**	300
	10	500	350	200
	15	375	275	150
	30	200	125	75
1	**2.5**	1100	**775**	450
	5	1000	700	400
	10	675	475	275
	15	500	350	200
3	**30**	275	**200**	110
	2.5	1100	775	450
	5	1000	700	400
	10	675	475	275
	15	500	350	200
	30	275	200	110
(B) Protection CTs				
5P 10	2.5	550	400	225
	5	375	275	150
	10	225	150	90
	15	150	100	60
	30	–	–	–
5P15	2.5	325	250	135
	5	275	200	110
	10	150	100	60
	15	85	60	35
	30	–	–	–
5P20	2.5	325	250	135
	5	200	125	75
	10	100	75	40
	15	–	–	–
	30	–	–	–
10P5	2.5	1000	700	400
	5	750	**525**	300
	10	425	300	175
	15	375	275	150
	30	150	100	60
10P10	2.5	600	425	250
	5	425	300	175
	10	275	200	110
	15	200	125	75
	30	–	–	–
10P20	2.5	325	225	125
	5	275	200	110
	10	125	75	50
	15	85	60	35
	30	–	–	–

Example 15.7

Consider a 1.5 MVA 33/11 kV transformer having a fault level of 750 MVA. The STF can be calculated as below with a circuit of 11 kV:

$$I_{SC} = \frac{750}{\sqrt{3} \times 11}$$

$$\simeq 40 \text{ kA}$$

and $$I_r = \frac{1.5}{\sqrt{3} \times 11} \times 1000$$

$$\simeq 79 \text{ A}$$

$$\therefore \quad \text{STF} = \frac{40 \times 1000}{79}$$

$$\simeq 506$$

Consider a CT with a ratio of 100/5 A and select a bar primary CT. If a bar primary is not practicable, then for an STF of almost 500, we can choose a wound-type measuring CT from Table 15.11 with an accuracy class of 0.5 and above and a corresponding VA burden of 5 for a short-time current of 1 second. If these parameters are not suitable use the measuring CT with a higher-rated primary current to meet the requirement.

Similarly, for a protection CT from Table 15.11 choose an accuracy class of 10P5 with a VA burden of 5 for a second short-time current. If this does not meet the need, the protection CT may also have to be selected with a higher-rated primary current.

15.8 Summary of specifications of a CT

In Table 15.12 we listed the data, that a user must provide to a manufacturer to design a CT for a particular application. Some of the data chosen are arbitrary to define the specifications.

15.9 Precautions to be observed when connecting a CT

1. It is mandatory to ground the secondary circuit of the CTs (in a balanced 3ϕ system, the current through the neutral will be zero; see Section 21.2.2, Figure 21.7). It is required to eliminate the error due to accumulation of electrostatic charge on the instruments that may influence the readings. All the CTs in a circuit must be grounded at one point only otherwise circulating currents may raise the potential of the circuit, which is dangerous and may damage instruments or give the operator a shock or even trip other relays connected in the circuit.
2. One should not allow the CT secondary to be open circuited when it is energized, for it may induce dangerously high voltages. This phenomenon is explained in Example 15.8.

Example 15.8

To determine the terminal voltage of a CT during an accidental open circuit under an energized condition consider a metering CT connected across a few instruments. Refer to the following figure based on Figure 15.17, showing an equivalent CT circuit referred to its secondary side.

We have assumed the following parameters,

Connected Load = 7.5 MVA

System Voltage = 11 kV

Burden of all instruments connected across the CT = 7.5 VA

Lead resistance = 2 × 0.5 Ω = 1Ω

$$\text{Rated current, } I_r = \frac{7.5 \times 10^6}{\sqrt{3} \times 11 \times 10^3}$$

$$= 393.7 \text{ A}$$

Consider a CT ratio of = 400/5 A

$$\text{Load impedance } Z_l = \frac{11 \times 10^3}{\sqrt{3} \times 393.7}$$

$$\simeq 16.13 \ \Omega$$

Z_l referred to the secondary side = 16.13 (400/5)2

= 103.23 kΩ

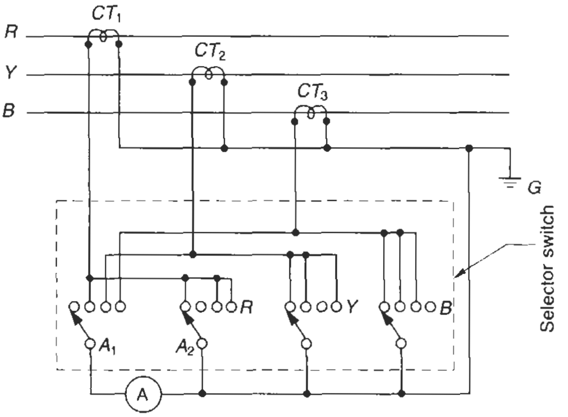

Figure 15.34 Shorting of all unused CT terminals in a CT secondary circuit using a selector switch

For ease of analysis we have ignored (without much error) the CT's own resistance and reactance.

Total resistance of the instruments under rated condition

$$= 7.5/5^2$$

$$= 0.3 \ \Omega$$

$$e_2 = \frac{11}{\sqrt{3}} \times \frac{400}{5}$$

$$\simeq 508.1 \text{ kV}$$

(a) Under energized condition when the CT's secondary is a closed circuit, voltage developed across the relay,

$$e_2' = \frac{e_2}{\text{circuit impedance}} \times 0.3$$

$$= \frac{508.1 \times 10^3}{(103.23 \times 10^3 + 1 + 0.3)} \times 0.3$$

$$= 1.48 \text{ V}$$

(b) Under energized condition when the CT's secondary is accidentally open circuited, the current will have only the magnetizing path and the voltage induced across the CT open terminals will be the same as across the magnetizing circuit. Under this situation the magnetizing circuit shall carry the same current as caused by the primary current, which is very high.

∴ Voltage developed across the CT open terminals,

$$e_2'' = \frac{508.1 \times 10^3}{(103.23 \times 10^3 + Ze)} \times Ze$$

$$\left[\begin{array}{l}\text{where } Z_e = \text{Impedance of excitation circuit,} \\ \dfrac{1}{Z_e} = \dfrac{1}{170} + \dfrac{1}{J60}\end{array}\right]$$

For simplicity, considering the approximate impedance of the excitation circuit (without much error) as J60 Ω

$$\therefore \quad e_2'' = \frac{508.1 \times 10^3}{(103.23 \times 10^3 + J60)} \times J60$$

$$\simeq J295 \text{ V}$$

which is approximately 200 times that of voltage under normal condition and hence highly detrimental for the insulation of the CT, the connecting leads and the human contact etc.

Depending upon the system loading at the instant of CT circuit interruption, it is possible that the primary current is enough to cause a saturation of the CT core. When so, it is

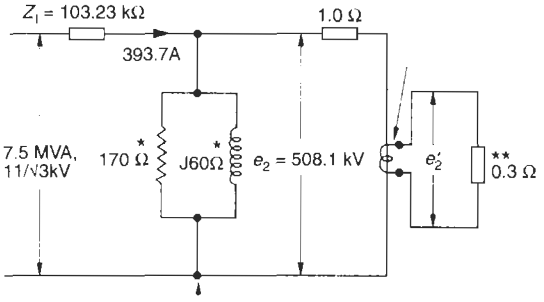

Excitation circuit

* Typical parameters of the CT

** Resistance of instruments of 7.5VA

(a) Under energized and closed circuit condition.

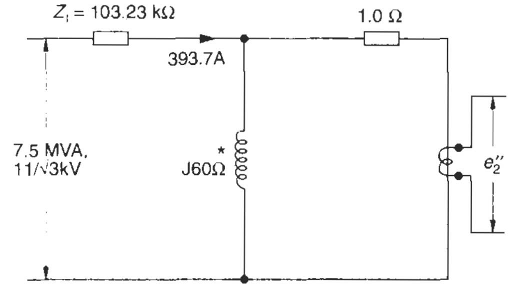

* Approx. impedance of the excitation circuit.

(b) Under energized but open circuit condition.

CT circuit referred to the Secondary side.

likely that the induced voltage across the CT open terminals may give a further momentary kick upto 2√2 times the voltage calculated above, as the current and hence the voltage shall undergo a rapid change from one peak to the other within one half of a cycle, Section 1.2.1.

3 Provision must be made to short-circuit all the CT secondary terminals not in use (for example, in three energized measuring CTs, connected to a common ammeter through a selector switch, when either none or any one of the CTs only may be connected to the ammeter at a time, the other CTs remaining out of circuit). In such cases, except for the CT in use, the remaining CTs should be shorted. The selector switches are therefore designed so that all the CT terminals not in use are shorted automatically through the switch, even during a change-over from one CT to another. A typical circuit diagram of the switch is shown in Figure 15.34, which illustrates the fulfilment of this requirement. It may be observed that in the OFF position, all the CT secondaries are shorted and when any one of them is in circuit, the remaining two are shorted. All such switches must be the 'make before break-type', so that the CT terminals are shorted before being connected to the load (ammeter) during the changeover.

4 One should select a lower secondary current, say, 1 A CT, for installations requiring long lengths of connecting leads, such as for remote measurement of current or other quantities. It is advisable to limit the extra VA burden on the CTs, on account of such leads.

SECTION III: TESTING OF INSTRUMENT AND CONTROL TRANSFORMERS

15.10 Test requirements

The following tests are recommended on a finished voltage or current transformer:

1 **Type tests** These are conducted on a finished voltage or current transformer, one of each design and type, to verify their compliance with the design data and relevant Standards.
2 **Routine tests** These are conducted on each finished voltage or current transformer to verify their suitability for the required duty.
3 **Field tests**
4 **Special tests** Any tests that are not covered above and are considered necessary by the user may be agreed upon between the manufacturer and the user.

15.10.1 Voltage transformers

1 **Type tests** These will cover the following tests:
  (i) Temperature rise test
  (ii) Verification of dielectric properties on the primary windings; To check the insulation level, as in Tables 13.2 and 14.3 for series I and Tables 14.1 and 14.2 for series II voltage systems.
    (a) Power frequency voltage withstand or HV test.
    (b) Impulse voltage withstand or lightning impulse test for system voltages 2.4 kV and above.
    Since a VT is associated with a switchgear, either with its assembly or with the switchyard, the above two tests are almost the same as those for the switchgear assembly and as discussed in Chapter 14. The test requirements and procedure are also similar.
  (iii) Wet test for outdoor type transformers The outdoor VTs are also tested for dielectric properties under wet conditions. The procedure to create the wet conditions and to carry out the test are specified in IEC 60060-2. In wet conditions, the VT has the same test voltages as specified above.
  (iv) Verification of accuracy The test results obtained must comply with the values of Tables 15.5 and 15.6 for a measuring and a protection transformer respectively. For brevity, we have limited our discussions as above. For more details, exact test values and test procedure refer to IEC 60044-2.

Table 15.12 Summary of specifications of a CT

Sr. no.	*Specifications*	*Measuring CTs*	*Protection CTs*	*Special-purpose protection CTs type 'PS'*
1	System voltage	As in Table 13.1		
2	Insulation level (peak)	As in IEC 60044-1 or Tables 13.2 and 14.3 for Series I and Tables 14.1 and 14.2 for Series II voltage systems		
3	Class of insulation	E	B	B
4	Frequency	50 or 60 Hz	50 or 60 Hz	50 or 60 Hz
5	Nominal current ratio	600/5 A	2000/5 A	2000/5 A
6	VA burden	← 2.5, 5, 7.5, 15 or 30 →		
7	Class of accuracy	0.1, 0.2, 0.5,1, 3 or 5	(5P, 10P or 15P)[a]	–
8	Accuracy limit factor (ALF)	–	(5, 10, 15)[b]	–
9	Short-time current I_{sc} and its duration	25 kA for 1 second	50 kA for 1 second	–
10	Dynamic current	Minimum 2.5 times I_{sc} (in the above case 62.5 kA)	Minimum 2.5 times I_{sc} (in the above case 125 kA)	–
11	Nominal turns ratio	–	–	1/400
12	Limiting secondary[c] resistance at 90°C (Ω)	–	–	3
13	Knee point voltage (V)	–	–	950
14	Excitation current at knee point voltage (or at any other required voltage or both) (A)	–	–	0.05
15	Service conditions	• Indoors or outdoors • Ambient temperature • Altitude, if above 2000 m for LT and above 1000 mm for HT • Humidity • Any other important requirement	• Indoor or out-door • Ambient temperature • Altitude, if above 2000 m for LT and above 1000 mm for HT • Humidity • Any other important requirement	• Indoors or outdoors • Ambient temperature • Altitude, if above 2000 m for LT and above 1000 mm for HT • Humidity • Any other important requirement
16	Making of CTs	(a) 600/5 A[d] 10 VA, class 1	2000/5 A 15 VA, class 5P10	6.6 kV, 2000 A, 1/400 950 × 0.05 R3.
		(b) System voltage and insulation level, class of insulation, frequency, short-time rating and dynamic current rating etc. for all types of CTs		

Notes

[a] The class of accuracy for protection CTs is recommended to be not more than 10P as far as possible.

[b] Product of VA and ALF not to exceed 150.

[c] The limiting secondary resistance is required to determine the secondary limiting e.m.f. which is = (FS) × rated secondary current × *VA* × resistance of secondary windings at 90°C or the highest operating temperature as in Table 14.5, where

$$FS = \text{Instrument security factor}$$

$$= \frac{\text{Rated instrument limit primary current}}{\text{Rated primary current}}$$

[d] Wherever two separate secondary windings are provided, say, one for measuring and the other for protection, the markings shall indicate all such details that are marked against (a) for each secondary winding.

2 **Routine tests** These will cover the following tests:

(i) Verification of terminal marking (refer to Table 15.7 and Figure 15.35, illustrating types of transformer connections).

(ii) Power frequency withstand test on the primary windings. This must be conducted only on the electromagnetic unit of a VT. For example, when testing a capacitor VT it must be conducted only on the secondary circuit, i.e. the electromagnetic transformer. The test values and test procedure will remain the same as discussed above.

Note

A repeat power frequency test, if considered necessary, must be performed at 80% of the prescribed test voltage. See also Section 14.5.

- (iii) Power frequency withstand test on the secondary windings. This must also be conducted only on the electromagnetic unit of a VT, as noted above, at 2 kV for 1 minute, similar to the control and auxiliary circuit dielectric test (Table 14.3).
- (iv) Verification of accuracy: as under type tests above.

3 **Field tests** Power frequency withstand test on the primary windings (for un-grounded VTs). The value of the test voltage and the test procedure, is almost the same as that for a switchgear assembly (Section 14.5).

4 **Additional tests on a capacitor VT** The tests discussed above refer generally to the electromagnetic unit only. To test the whole VT, the following tests are recommended. For the test procedure and results refer to IEC 60186.

Type tests

1 Tests on capacitors
   - (a) Self-resonating frequency test – applicable only to carrier coupling capacitors.
   - (b) Power frequency wet withstand test on outdoor capacitors.
   - (c) D.C. discharge test.
   - (d) Impulse voltage withstand test.
   - (e) Partial discharge (ionization) test.

2 Temperature rise test.
3 Impulse voltage withstand test.
4 Ferro-resonance test.
5 Transient response test.
6 Verification of accuracy.

Routine tests

1 Tests on capacitors
   - (a) Capacitance and tangent of the loss angle (tan δ)
   - (b) Power frequency dry withstand test
   - (c) Sealing test

2 Verification of terminal marking
3 Power frequency withstand test on the secondary circuit
4 Verification of accuracy

15.10.2 Current transformers

1 **Type tests** These will cover the following tests:
   - (i) Short-time current (I_{SC}) test
   - (ii) Momentary peak or dynamic current test. (This must be conducted at a minimum of 2.5 I_{SC})

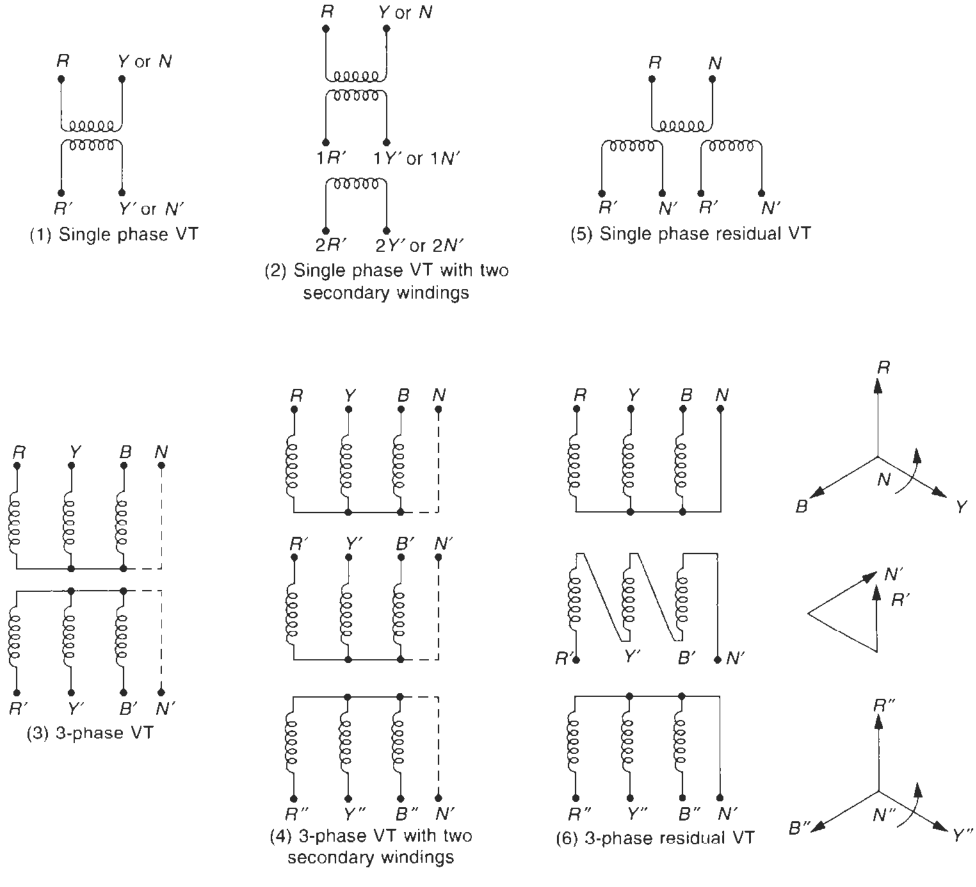

(1) Single phase VT

(2) Single phase VT with two secondary windings

(5) Single phase residual VT

(3) 3-phase VT

(4) 3-phase VT with two secondary windings

(6) 3-phase residual VT

Figure 15.35 Single and three-phase VTs with one and two windings in the secondary

(iii) Temperature rise test

(iv) Verification of dielectric properties on the primary windings to check the insulation level as in Tables 13.2 and 14.3 for series I and Tables 14.1 and 14.2 for series II voltage systems.

(a) Power frequency voltage withstand or HV test.

(b) Impulse voltage withstand or lightning impulse test for system voltages 2.4 kV and above.

Since a CT is associated with a switchgear, either with its assembly or the switchyard, the above four tests are almost the same as those for a switchgear assembly and as discussed in Chapter 14. The test requirements and procedure are also similar.

(v) Wet test for outdoor type transformer: This test is similar to that for a VT and as discussed in Section 15.10.1(1).

(vi) Verification of accuracy: the test results obtained must comply with the values of Tables 15.8 and 15.9 for a measuring and a protection CT respectively.

2 **Routine Tests** These will cover the following tests:

(i) (a) **Verification of terminal marking**

Refer to Figure 15.36, illustrating types of transformer connections.

(b) To check the polarity of a CT: It is imperative that the terminals of a CT are wired with correct polarity, with reference to the primary in each phase. A reversal in any phase will lead to incorrect meter readings, in metering CTs and erratic signals to the protective relays in protection CTs. Although CTs are marked with polarities by their manufacturers, such as P_1 P_2 for primary and S_1 S_2 for secondary (Figure 15.36) it is possible, that by human error at the time of fitting the CTs, care is not taken to maintain the same polarity in all the three phases, or their connections are made inadvertently, without ascertaining their correct polarity. It is also possible that on a reconnection, such as at site, while reassembling the modules of a switchgear or a controlgear assembly, such an omission is made. It is therefore advisable that the polarity of the CTs be ascertained at site before commissioning the equipment, such as a switchgear or a controlgear assembly or a switchyard utilizing a few CTs.

D.C. *voltage test to ascertain the polarity*: A simple procedure to ascertain this is indicated in Figure 15.37. A low reading d.c. voltmeter is connected across the CT secondary windings and a battery of 6–12 V through a switch across the primary. On closing the switch, the meter needle will give a momentary flicker. If the polarity is correct, the flicker will be positive on connection and negative on disconnection. For HT CTs, mounted on transformer bushings, it is recommended to short-circuit the main transformer secondary (LV) windings to reduce the overall impedance of the transformer to achieve an appreciable deflection of the voltmeter needle.

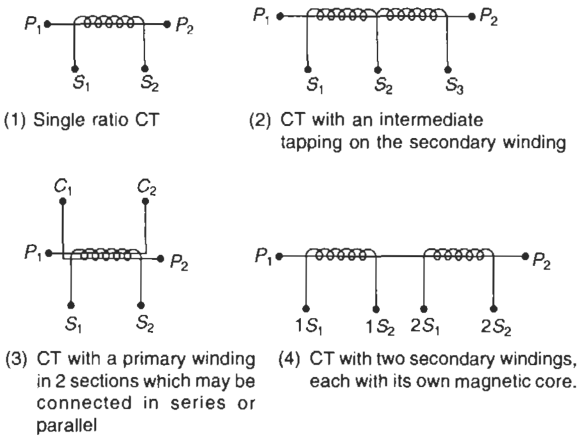

Figure 15.36 A CT wound in different combinations

(ii) Power frequency withstand test on secondary windings

The secondary windings should be capable of withstanding a rated power frequency, short-duration withstand voltage of 3 kV for 1 minute.

(iii) Power frequency withstand test between sections

This test is applicable when the CT's primary and secondary windings have two or more sections. Then the section in between will be capable of withstanding a similar voltage as noted in item (ii) above.

(iv) Inter-turn overvoltage test

This test is performed to check the suitability of the inter-turn insulation to withstand the high

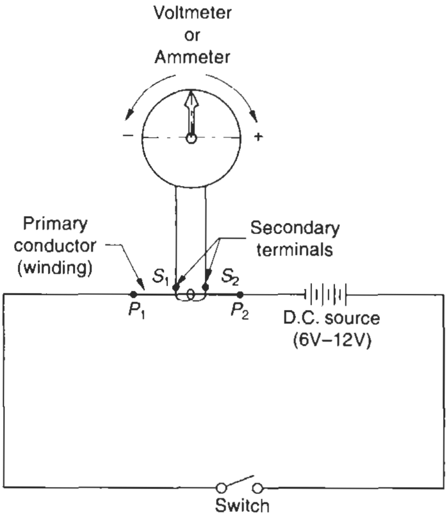

Figure 15.37 Circuit to check the polarity of a bar primary CT at site

Relevant Standards

IEC	*Title*	*IS*	*BS*	*ISO*
60034-1/1996	Rotating electrical machines Rating and performance	4722/1992 325/1996	BS EN 60034-1/1995	
60044-4/1980	Method for measuring partial discharges in instrument transformers	11322/1990	BS 6184/1992	–
60051 1 to 9	Direct acting indicating analogue electrical measuring instruments and their accessories	1248 – 1 to 9	BS 89-1 to 9	–
60059/1999	Standard current ratings (based on Renald series R-10 of ISO-3)	–	–	3/1973
60060-1/1989	High voltage testing techniques. General definitions and test requirements	2071-1/1993	BS 923-1/1990	–
60060-2/1994	High voltage test techniques. Measuring systems	2071-3/1991	BS EN 60060-2/1995	–
60076-3/1980	Power transformers. Specification for insulation levels and dielectric tests	2026-1 and 3/1991	BS 171-3/1993	–
60044-1/1996	Specification for current transformers	2705		
	General requirements	part-1/1992	BS 7626/1993	
	Measuring current transformers	part-2/1992		–
	Protective current transformers	2705 part-3/1992	BS 7626/1993	
60044-6/1992	Requirements for transient performance	2705 part-4/1992		
	Application guide for voltage transformers	4201/1991		
60044-2/1997	Specification for voltage transformers	4146/1991	BS 7729/1995	
	General requirements	3156-1/1992		–
60186/1995	Capacitive voltage transformers General requirements for measurement and protection (all voltages)	3156-1/1992 3156-2/1992 3156-3/1992 3156-4/1992	BS 7625/1993 BS 7729/1995	
60255-6/1988	Electric relays, requirements	3231 and 3842	BS EN 60255-6/1955	
60439-1/1992	Low voltage switchgear and controlgear assemblies. Type-tested and partially type-tested assemblies	8623-1/1993	BS EN 60439-1/1994	–
–	Summation current transformers	6949/1973	–	–
–	Application guide for capacitor voltage transformers	5547/1991	–	–
–	Specification for control transformers for switchgear and controlgear for voltages not exceeding 1000 V	12021/1987	–	–

Relevant US Standards ANSI/NEMA and IEEE

IEEE 4/1995	Standard techniques for HV testing.
ANSI/IEEE C57.13/1987	Instrument transformers (CTs and VTs)-Requirements.
ANSI/IEEE C.57.13.2/1991	Conformance test procedure for instrument transformers (CTs and electromagnetic VTs)

Notes

1 In the tables of relevant Standards in this book while the latest editions of the standards are provided, it is possible that revised editions have become available. With the advances of technology and/or its application, the updating of standards is a continuous process by different standards organizations. It is therefore advisable that for more authentic references, readers should consult the relevant organizations for the latest version of a standard.

2 Some of the BS or IS standards mentioned against IEC may not be identical.

3 The year noted against each standard may also refer to the year of its last amendment and not necessarily the year of publication.

voltage developed in the secondary circuit in the event of an accidental secondary open circuit on load. The inter-turn insulation of the windings should be capable of withstanding an inter-turn overvoltage of 4.5 kV peak across the complete secondary winding. The test may be conducted by keeping the secondary winding open circuited and applying a primary current less than or equal to the rated primary current for 1 minute, sufficient to produce a voltage at the secondary terminals equal to 4.5 kV (peak).

(v) **Power frequency withstand test on primary windings**
This test is same as for item (iv) (a), under type tests.

Note
A repeat power frequency test, if considered necessary, must be performed at 80% of the prescribed test voltage. See also Section 14.5.

(vi) **Partial discharge measurement**
(vii) **Verification of accuracy**
This test is the same as under type test item (vi)

3 **Special tests**
The following additional tests may be conducted when considered necessary:
(i) Chopped lightning impulse test. Refer to IEC 60044-1
(ii) Measurement of the dielectric dissipation factor (tan δ), applicable to only liquid immersed primary windings, rated for 110 kV and above.

Note
For lower voltage systems, say, 2.5 to 10 kV, measurement of dielectric loss factor tan δ, along similar lines, to those recommended for motors and discussed in Section 9.6.1 is advisable as a process test to monitor the quality of an HV insulation system, during the course of manufacture and using the same value for future reference when checking the quality of insulation when energizing or during a field test.

List of formulae used

Differential ground fault protection

Current setting of the relay,

$$I_{pf} = n\,(N \times I_m + I_{st}) \qquad (15.1)$$

I_{pf} = minimum fault current through the primary required to trip the relay
n = turn ratio of the CTs
I_m = magnetizing current of the CTs corresponding to the V_{ft}
I_{st} = relay current setting
N = no. of CTs falling in parallel

To limit the peak voltage

$$V_p = 2\sqrt{2}\,\sqrt{V_k\,(V_m - V_k)} \qquad (15.2)$$

V_p = peak voltage across the relay
V_m = theoretical maximum CT secondary voltage across the relay circuit at the maximum internal fault current
V_k = knee point voltage

Further reading

Protective Relays and Application Guide, GEC Measurement, General Electric Co. Ltd, Stafford, Uk.

16

Captive (Emergency) Power Generation

Contents

16.1 Introduction

It is common practice to provide a standby emergency source of supply at all important installations such as large factories, railways, airports and other essential services. This is usually achieved with the use of a captive diesel generator (DG) set (Figure 16.1). Here we briefly discuss these machines, their characteristics and selection for a required application. We also consider schemes that are commonly used to start a DG set and run it individually or in parallel with an existing source of supply, which may be another DG set or an infinite bus.

16.2 DG set

This comprises the following parts

Engine

This is the main prime mover (PM) for the generator and may be a gas, petrol or diesel engine, depending upon the availability of fuel. In the discussions below, we emphasize a diesel engine, being used more commonly for captive power generation.

The control of power output of a generator is obtained through this PM only. It has a drooping characteristic on load, as shown in Figure 16.2. These characteristics are used to control the fuel supply to the engine through a speed-regulating governor, which controls the power output of the generator.

The difference in the speed of the engine at no load and full load is termed the speed droop, and is expressed as a percentage of the no-load speed, i.e.

Speed droop or speed regulation,

$$\Delta N = \frac{N_0 - N_s}{N_0} \times 100\%$$

where

ΔN = speed droop or speed regulation (%)
N_0 = speed of the engine at no load (r.p.m.)
N_s = synchronous speed or speed of the engine at full load (r.p.m.)

The droop is maintained at around 3–5% by the leading manufacturers. The lower the droop, the better will be the performance of the engine on load. Since

$$N_s \propto f$$

$$\therefore \ \Delta f \propto \Delta N$$

and therefore, the smaller will be the fluctuation in the frequency of the generated power. But for parallel

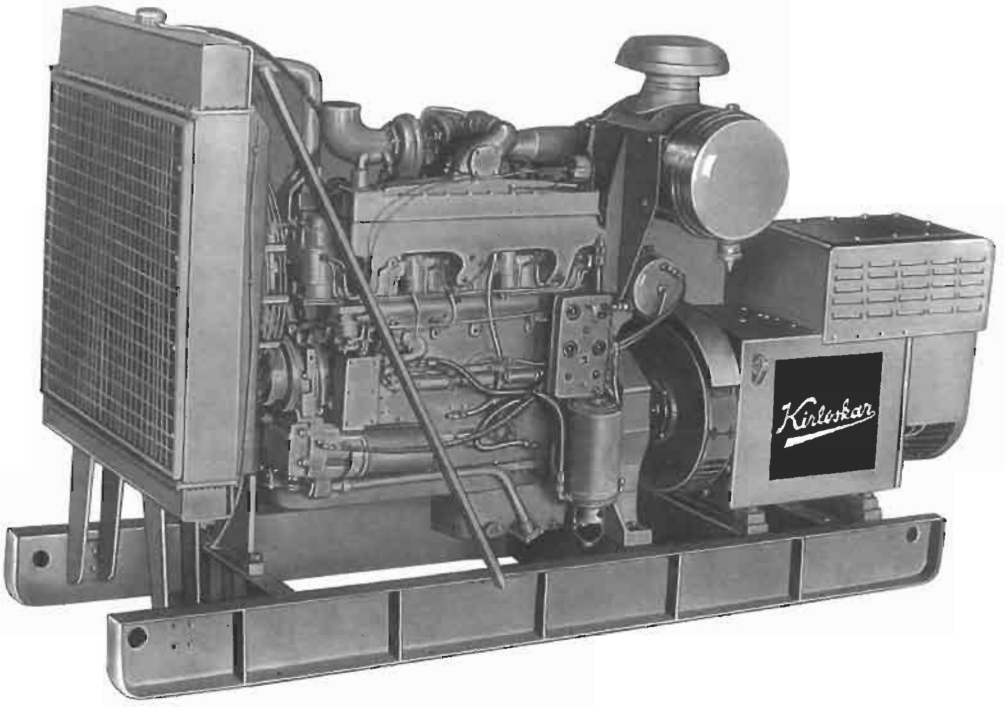

Figure 16.1 Diesel generator set (Courtesy: Kirloskar Electric)

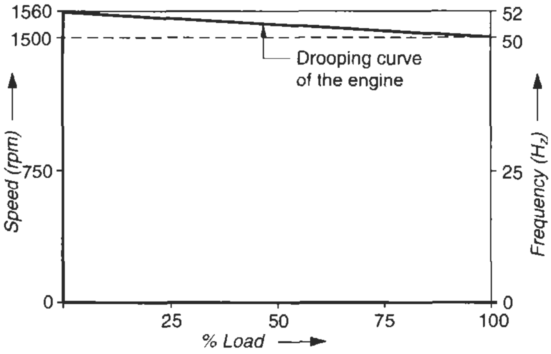

Figure 16.2 Typical speed–load characteristics of a 1500 r.p.m. engine with 4% droop

operation of the generator, a higher droop will mean better load sharing. Refer to Examples 16.2 and 16.3.

Governor

This senses the speed of the machine and performs extremely fast and accurate adjustments in the fuel supply to the PM. In turn it regulates the speed and the output of the PM within predefined limits, depending upon the droop of the PM. The governor may be a mechanical (manual), hydraulic or electronic (automatic) device.

The governor can be set to make the machine run at a constant speed, even on load variations, with extremely quick and almost instantaneous speed control, and thus maintain a near-zero ΔN. In a parallel operation they can also control load sharing automatically and accurately. Power grids, receiving power from different sources, are extremely susceptible to frequency variations. Even a small Δf of the order of 0.5 Hz, may cause the system to trip. A fast-actuating governor with low response time (as low as 0.5 second) can overcome such a situation by quickly regulating the speed of the PM.

Generator

These may be of two types:

1 **Rotating armature** These have a rotating armature and a static field excitation system. The output from the armature is taken through the sliprings.
2 **Static armature or brushless alternators** These have a rotating field excitation system and are now used more commonly compared to the conventional types noted above, particularly in the medium and large ratings. Both generators are self-excited and have a self-regulated excitation system. For the main parameters and general operating conditions, refer to BS 4999-140.

16.3 Operating parameters

The following are some important operating parameters:

16.3.1 Residual voltage for self-excitation

The armature of the machine will normally have a residual voltage of around 8 V (for LT machines) across the terminals when running at the synchronous speed. If not, as when the generator is operated after a long shutdown, a d.c. voltage of 12 V can be applied through a battery for a few seconds to obtain the required residual voltage.

16.3.2 Operating PF

Small generators such as those used for captive power generation are seldom used as synchronous motors or synchronous condensers. To save on the cost of machines their field system is generally designed for 0.8 p.f. lagging, unless designed for another application for a different p.f. The generator output is also defined at 0.8 p.f. lagging and rated in kVA. The 0.8 p.f. so selected is in consonance with the average p.f. at which a power system would be operating generally. The maximum kW rating of the machine is therefore defined by kVA × p.f. The operating p.f. plays a vital role in the selection of the machine. It is desirable that the load which the generator may have to feed has a p.f. of at least 0.8 lagging and more, but not beyond unity. The machine may not perform well at p.f.s lower than it is designed for, as well as in the leading mode, because

- At lower p.f.s the field system is required to be overexcited, which may cause excessive heating of the field windings.
- At lower p.f.s the machine will deliver even less than the theoretical output ($< \sqrt{3} \cdot V \cdot I \cdot \cos \phi$) due to higher I^2R losses, which will remain the same while the active component ($I \cdot \cos \phi$) will be reduced corresponding to the lower p.f. See also Section 23.3.
- In the leading mode the field system will be ineffective. When this is required the manufacturer must be consulted. In the leading mode when the machine is suitable to operate such, the voltage will improve and the machine will operate in the underexcited mode. While the field winding will now be less stressed, the leading p.f. is not healthy for the machine and the equipment connected on it because
  (a) The capacitive mode will cause an overvoltage across the machine windings during a switching operation (Section 23.5.1) which may damage them particularly the end turns.
  (b) In the leading mode the harmonics, when present in the system, will magnify and further distort the voltage and current waveforms. The windings of the machine are therefore more stressed due to such spurious overvoltages (V_h). For V_h, see Section 23.5.2(A) and equation (23.1).

Thus, in the leading mode the machine tends to become unstable. It is therefore mandatory to operate the machine well within its stability region, i.e. between 0.8 p.f. lagging and unity, unless it is also designed for a leading mode. Every machine has its own operating parameters as shown in Figure 24.9. To obtain its best performance, it must be operated within these parameters.

Generally, machines up to 1000 kVA are designed for these parameters. Generators used for hydropower generation and operating on smaller heads may also sometimes be required to operate in a leading mode as a synchronous condenser to improve the p.f. of the system. This may happen when the water head in the reservoir falls below its minimum required level and is not capable of generating the required minimum power. When used in these conditions the field system has to be designed for both lagging and leading modes.

16.3.3 A generator as a synchronous motor or a condenser

When a generator is designed for a leading p.f. (in the underexcitation mode) it can operate as both a synchronous motor and a synchronous condenser. The machine is now self-starting and does not require a prime mover.

- **As a synchronous motor** The machine is run primarily to drive a mechanical load and is operated at the synchronous speed and at unity p.f. The efficiency is now better than that of an induction motor. Except in assisting the system by consuming power at unity p.f., it does not help the system to improve its p.f.
- **As a synchronous condenser** The machine is operated without any mechanical loading. It is now used primarily to supply leading reactive power to improve the system p.f. The machine can now be operated with continuously variable leading reactive power, with the help of an automatic voltage regulator (AVR) and a quadrature droop control (QDC), and can even improve a varying p.f. of the system caused by fluctuating loads. The machine can be made to operate up to 0.1 p.f. leading (as a capacitor) without affecting its stability. The active power, however small, is delivered at 0.1 p.f. and is consumed to feed its own no-load losses.

Note

When desired, the machine can also be designed as an inductor to supply lagging reactive kVAr, with the help of AVR and QDC. It will serve little purpose, if used both as a motor and a condenser. Refer to Figure 16.3, illustrating the trajectory of the current phasor, I_l. For the current I_l at a p.f. $\cos \phi$ (leading),

- Active power output per phase $= V \cdot I_l \cos \phi$, and
- Reactive power output per phase $= V \cdot I_l \sin \phi$

We can observe that at higher leading p.f.s (region A in Figure 16.3), while the active power will rise, the reactive power will be too low to contribute effectively towards the p.f. improvement of the system. This is also true at lower leading p.f.s (region B). While the reactive power will now rise, the active power will be too low, to perform any mechanical duty, the more so when part of it will be consumed to feed its own no-load losses. The usual practice, therefore, is to use it either as a synchronous motor (region A) or as a synchronous condenser (region B) at a time. Extra kVA can be built in to the machine partly to improve the system p.f. and partly to perform the required mechanical duty. The following example will illustrate this.

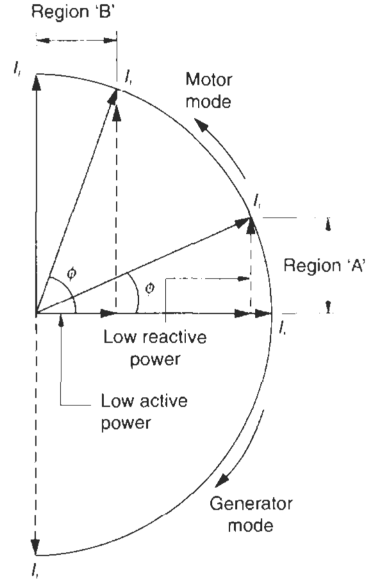

Figure 16.3 Using a machine either as a motor or as a condenser

Example 16.1

Consider a process plant having a connected load of 15 000 kW and a running load of 12 500 h.p. at almost 0.65 p.f. lagging. Let a few large induction motors aggregating 2000 h.p. be replaced by as many oversized synchronous machines, with the purpose of improving the system p.f. in addition to performing the motor's duties.

Considering an average efficiency of the induction motors as

$$\eta = 92\% \text{ and}$$

$$\text{p.f.} = 0.9 \text{ lagging}$$

$$\therefore \quad \text{Equivalent kW} = \frac{2000 \times 0.746}{0.92}$$

$$= 1622 \text{ kW}$$

$$\text{andkVA rating at 0.9 p.f.} = \frac{1622}{0.9}$$

$$= 1802 \text{ kVA}$$

$$\therefore \quad \text{Reactive kVAr} = 1802 \sin \cos^{-1} 0.9$$

$$= 1802 \times 0.4359$$

$$= 785 \text{ kVAr (lagging)}$$

For ease of illustration, all these parameters have been drawn in the phasor diagram (Figure 16.4). To select the rating of the synchronous condensers, consider their average efficiency,

$$\eta = 95\% \text{ and}$$

$$\text{p.f.} = 0.3 \text{ leading}$$

$$\therefore \quad \text{Total kVA rating} = \frac{1622}{0.95 \times 0.3}$$

$$= 5691 \text{ kVA. Say, 5700 kVA}$$

$$\text{and} \quad \text{reactive kVAr} = 5700 \cdot \sin \cos^{-1} 0.3$$

$$= 5700 \times 0.95$$

$$= 5415 \text{ kVAr (leading)}$$

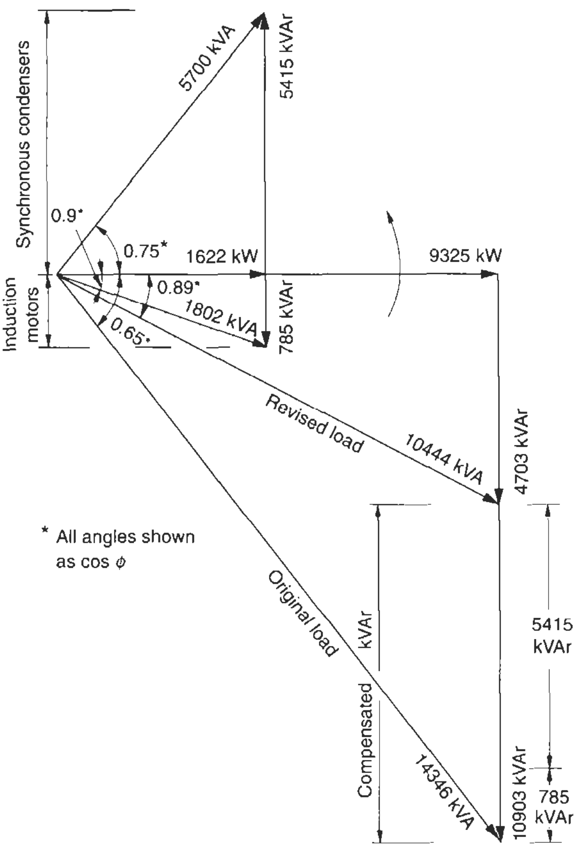

Figure 16.4 Improving system PF with the use of a synchronous condenser

Draw the phasor diagram for the actual load also at 12 500 h.p. at 0.65 p.f.

$$\therefore \quad \text{Active load} = 12\ 500 \times 0.746$$

$$= 9325 \text{ kW}$$

$$\text{and kVA} = \frac{9325}{0.65}$$

$$= 14\ 346 \text{ kVA}$$

$$\text{and reactive load, kVAr} = 14\ 346 \sin \cos^{-1} 0.65$$

$$= 14\ 346 \times 0.76$$

$$= 10\ 903 \text{ kVAr (lagging)}$$

After replacing these large induction motors with as many oversized synchronous motors, while the active load at 9325 kW remains the same, the reactive load of induction motors at 785 kVAr will be eliminated and instead a leading reactive load of 5415 kVAr will be added. The net compensation therefore will be

$$= 785 + 5415$$

$$= 6200 \text{ kVAr}$$

leaving an uncompensated reactive load

$$= 10\ 903 - 6200$$

$$= 4703 \text{ kVAr}$$

$$\text{And an improved loading} = \sqrt{9325^2 + 4703^2}$$

$$= 10\ 444 \text{ kVA}$$

as against 14 346 kVA

$$\text{and improved p.f.} = \frac{9325}{10\ 444}$$

$$= 0.89 \text{ as against } 0.65$$

It is, however, recommended for better control and machine utilization that when the load's demand is for constant-speed operation, this must be met through separate synchronous motors at unity p.f. and the p.f. must be improved separately through synchronous condensers with variable field excitation.

If the synchronous condensers are employed only to improve the system p.f. from 0.65 to, say, 0.9 lagging, then the rating of the machines can be determined as follows:

Total active load = 9325 kW

$$\therefore \text{ kVA at 0.9 p.f. lagging} = \frac{9325}{0.9}$$

$$= 10\ 361 \text{ kVA}$$

$$\text{And} \quad \text{reactive kVAr} = 10\ 361 \sin \cos^{-1} 0{\cdot}9$$

$$= 10\ 361 \times 0.436$$

$$= 4517 \text{ kVAr}$$

$\therefore$ Compensation is required for

$$= 10\ 903 - 4517$$

$$= 6386 \text{ kVAr}$$

Then the kVA of the synchronous condensers, operating at 0.1 p.f. leading and having an efficiency of 98%

$$= \frac{6386}{0.98 \sin \cos^{-1} 0.1} \quad \text{(Figure 16.5)}$$

$$= \frac{6386}{0.98 \times 0.995}$$

$$= 6549 \text{ Say, } 6550 \text{ kVA}$$

The AVR may be designed for variable duty, for automatic control of the reactive power, to the required level through feedback control systems. The machines will now operate only as synchronous condensers without performing any mechanical duty.

16.3.4 Field system

Automatic voltage regulator (AVR)

This device controls the generator and maintains a steady-state armature voltage automatically within the predefined limits. It also serves to control the reactive kVAr loading during a parallel operation or when the machine is being used as a synchronous condenser for reactive power compensation through a quadrature droop control (QDC) as noted below.

Quadrature droop control (QDC)

This is a scheme introduced in the AVR circuit to adjust the reactive power (kVAr) of a machine during a parallel operation or when it is being used as a synchronous condenser. It prevents a reactive circulating current, I_c, through the armature windings when the two machines are operating in parallel (Figure 16.21), or controls the reactive component within the required limits when operating on an infinite bus (Figure 16.26(a)). The limit of such circulating currents is defined to be within 5% of the rated current of the machine. The QDC circuit is illustrated in Figure 16.6. The basic purpose of the circuit is to detect the content of kVAr being fed by the machine when operating in parallel. The AVR, in turn, adjusts the field excitation to vary the operating p.f. of the machine to control the kVAr to the required level.

If the machine operates at p.f.s lower than 0.8, the excitation requirement of the machine would be high. This is a case of overexcitation and may damage the field system. For such operations, the machine would require a double derating, depending upon the p.f. at which it has to operate, one for the lower p.f., due to the reduced active component of the current ($I \cos \phi$) and the second because of higher excitation demand. In such cases the manufacturers may be consulted. A corrective step, however, would be to improve the system p.f. by installing a few capacitor banks to achieve a system p.f. between 0.8 and 1.0.

Corollary

At low p.f.s the generator operates at a low level of excitations (armature reaction demagnetizing). During a fault, therefore, when the p.f. of the circuit falls it will also cause a fall in the excitation level and in turn in the terminal voltage. A low voltage, however, would reduce the severity of the fault.

Similarly, when the machine is required to operate at leading p.f.s, the field system has to be redesigned, as the normal field system, which is designed for lagging p.f.s, will be ineffective, as discussed below.

16.4 Theory of operation

The reference voltage V_{yb} is obtained from any of the two phases of the armature windings through a control transformer, T_r. The current reference, I_r, is obtained through a metering CT provided in the third phase and wired to the burden resistance, R, of the AVR. Based on this, the AVR takes corrective steps by altering the field excitation of the machine to adjust the load (I_r) p.f. so that the reactive load (kVAr) supplied by the machine will fall within the pre-set value during a parallel operation. The kVAr being supplied by the generator will influence the setting of the AVR in the following ways:

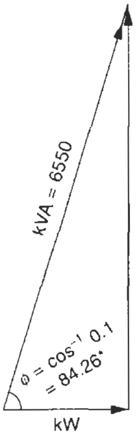

Figure 16.5 Improving system PF with the use of a synchronous condenser

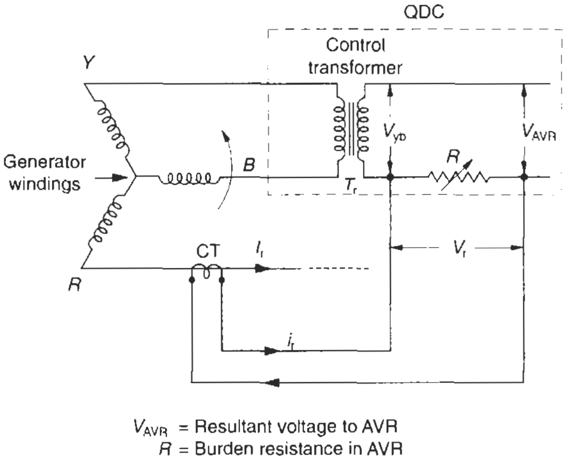

Figure 16.6 A normal quadrature droop circuit (QDC)

- **Unity PF** (Figure 16.7(i)) The reference current i_r produces a voltage V_r across the burden resistance R, which adds to the reference voltage, V_{yb}, at right angles. It causes a very small change in the AVR terminal voltage, V_{AVR}.
- **0.8 PF lagging** (Figure 16.7(ii)) At 0.8 p.f. this is only marginally more than the above.
- **Zero PF lagging** (Figure 16.7(iii)) Now the margin is substantial as the reference voltage V_{yb} and V_r add linearly, being in phase opposition (a case of overexcitation). The resultant voltage at the AVR will be high and current lagging, causing the field excitation to rise substantially and adjusting this to the required value to make the machine share the desired kVAr loading. The QDC in the AVR circuit thus helps maintain a p.f. balance and also the kVAr loading by varying its excitation.
- **Zero PF leading** (Figure 16.7(iv)) V_r now subtracts from V_{yb} (a case of underexcitation). The resultant voltage at the AVR reduces but the armature reaction is magnetizing as the current is leading. The AVR therefore, is redundant as it has no control over the generated voltage and leads to instability. The generators, designed for a lagging p.f. operation, therefore, are not suitable for leading p.f.s. Wherever such a need arises, the generator field system has to be designed for a leading p.f.

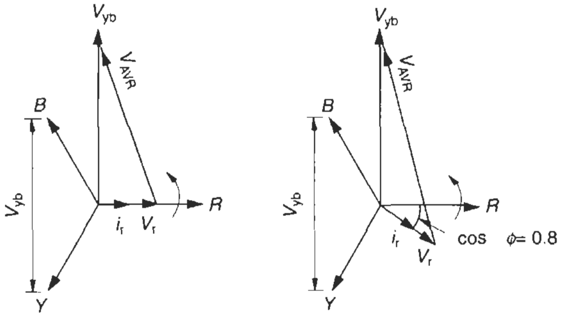

(i) p.f. – unity
V_{AVR} – Marginally more

(ii) p.f. – 0.8 lagging
V_{AVR} – Slightly more

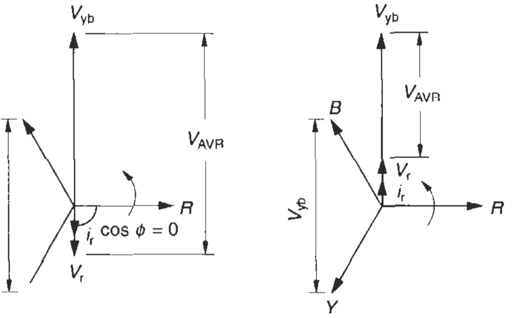

(iii) p.f. – Zero
V_{AVR} – Maximum

(iv) p.f. – Leading
V_{AVR} – Diminishes

Figure 16.7 Phasor diagrams for QDC, referred to the secondary side of the control transformer

16.5 Guidelines on the selection of a DG set

Several factors are important in the performance of a generator, and not the service conditions alone, as discussed for motors, in Section 1.6. In addition to service conditions, the operating power factor plays a significant role in the selection of a DG set, as noted above. The following p.f. conditions may occur in practice, depending upon the type of loads connected on the system. Refer to Figure 16.8.

16.5.1 PF lagging and less than 0.8

The active component of current OB reduces and so does the kW rating of the generator. When the generator operates fully loaded, the engine operates underloaded but the reactive component BB′ rises, requiring a higher level of excitation (a higher field current), which may cause damage to the field system, which is designed for 0.8 p.f. lagging. It would thus require a derating of the complete machine indirectly. Generally, the derating may be of the order of 15% for a p.f. of 0.6 and 8% for a p.f. of 0.7. For exact deratings consult the manufacturer.

16.5.2 PF between 0.8 and unity

The maximum kW rating of the DG set remains at 0.8 × kVA, even when the p.f. of the system it is feeding rises to unity. This is due to a limitation in the engine capacity, which is normally selected for only 0.8 × kVA (kW = p.f. × kVA). At higher p.f.s, while the active component OA of the revised current OA″ remains the same as at 0.8 p.f., the generator will draw a lower current at I''_{OA} and operate underloaded, while the engine will be fully loaded and the DG set will deliver its optimum rated output. For a resistive load of 100 kW, for instance, operating at unity p.f., a generator rated for 100 kVA is not suitable because the kW rating of the engine for a 100 kVA set will be only 0.8 × 100 i.e. 80 kW.

∴ The DG set (at least the engine) for such a load must be selected for 100 × 1, i.e. 100 kW or 125 kVA.

16.5.3 PF leading

A generator is normally designed for a lagging p.f., and is not suitable to operate at leading p.f.s. At leading pfs, the armature reaction becomes magnetizing, and the field system loses its control over the terminal voltage. During a leading p.f., therefore, the terminal voltage rises rapidly, as the field system becomes redundant, rendering the machine unstable. The field current reduces as the leading p.f reduces. When the leading p.f. reduces further, say from OC to OC′ (Figure 16.8), the field current (excitation) reaches almost zero, a condition known as self-excitation. This is the critical point of the AVR when it will lose almost all its control. Any further reduction in the p.f. will cause overexcitation, causing the voltage to rise steadily without any control. Leading p.f.s thus cause instability and rapid voltage rises.

The above situation is, however, found when the machine is run singly. When it is operated in parallel with another source, the field excitation will not influence

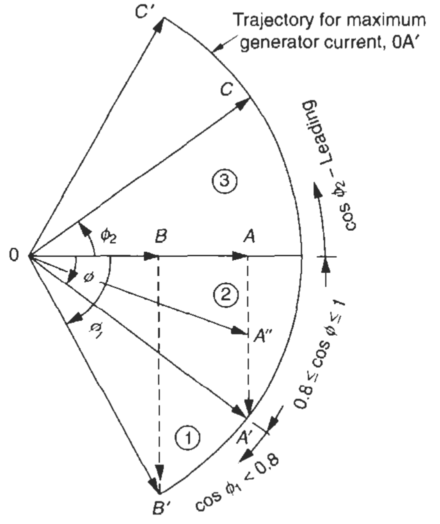

OA – Maximum active component of generator = 0.8*I*
AA′ – Maximum reactive component of generator = 0.6*I*, (if OA′ = I_r)

Figure 16.8 Effect of PF on the output of a DG set the output voltage, as it will adjust only its operating p.f. (Section 16.9.1 B-2 and D-2). A difference in excitation between the two machines when operating in parallel will cause a circulating current I_c (Figure 16.15). It will add to one machine and subtract from the other, depending upon which machine is relatively overexcited, compared to the other. The QDC, as discussed in Section 16.3.4, will play the required role to limit the reactive loading of the two machines within permissible levels, when such a situation arises.

16.6 Types of loads

The p.f. varies with the type of load. Here we discuss the likely loads, their behaviour and precautions that must be taken when selecting a DG set for various types of loads.

16.6.1 Linear loads

Such as motors (not really but can be considered so being balanced loads) heating loads, capacitor and incandescent lighting loads etc. Of the linear loads, the following will require special consideration.

Motor loads

These are highly inductive and cause heavy inrush currents during a switching operation, depending upon the type of starting being adopted. The generator being a high-impedance machine, application of such high current loads will cause a heavy voltage dip, which can be up to 10–15% of the rated voltage, until the AVR acts to restore the pre-set value of the terminal voltage. Although restoration of the rated voltage is rapid due to a low response time of the AVR (of the order of 0.5–1 second) the generator is required to supply a much higher current, at least for this duration. Consideration must be given for all such loads on the system and their switching currents at the time of selecting the generator rating. A generator is generally suitable to carry a momentary but infrequent current inrush up to 2 to 2.5 times its rated current for hardly 10 seconds.

Resistive loads

When the p.f. of the load is more than 0.8, select an engine of a higher rating, as noted earlier.

Capacitive loads

These are used for improving the p.f. of the system. When they are installed in the circuit, they must be switched OFF with the loads, to avoid a leading p.f. But it must be ensured that the p.f. of the system does not fall below 0.8, otherwise it would overload the generator as well as its field system.

During a switching operation, the capacitive reactance of capacitors and inductive reactance of the generator may resonate and cause a voltage surge in the field winding, as a result of transformer coupling between the armature and the field. This may damage the bridge diodes. The practice of the leading manufacturers is to provide a surge suppression device in the rectifier assembly to protect against such voltage surges.

16.6.2 Non-linear loads

- Loads of rectifier, thyristor, UPS (uninterrupted power supply) and battery chargers etc.
- Fluorescent tube lights.
- All such loads that have non-sinusoidal waveforms. All these loads cause a distortion in their pure sine wave current waveforms. These distortions are termed 'harmonics' and such loads 'non-linear loads'. Thyristor and rectifier loads fall into this category and affect the sinusoidal waveform of the generator voltage and distort it. Typical voltage distortions in the output supply of a machine as a consequence of current distortions, caused by such non-linear loads are shown in Figure 16.9 for a particular type of generator whose windings have a pitch factor of 2/3 (which suppresses third harmonic quantities). The magnitude of distortions may vary with other machines having different winding parameters. The distortion causes:

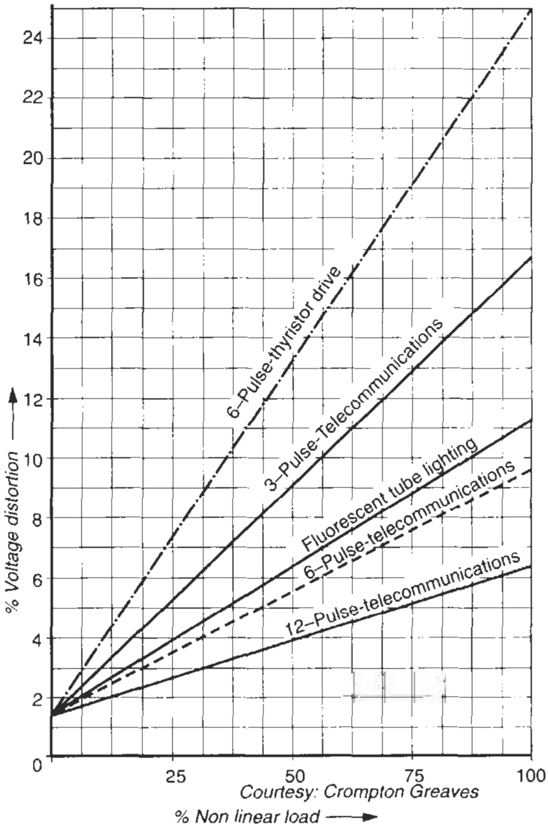

Courtesy: Crompton Greaves

Winding parameters:
Pitch factor – 2/3
Sub-transient reactance, x''_d – 12%

Figure 16.9 Voltage distortion caused by different types of thyristor drives (with the use of IGBTs, however, the distortion would be greatly reduced)

1 Excessive heating of magnetic cores, as a result of harmonic frequencies due to hysteresis and eddy current losses (equations (1.12) and (1.13)).
2 Overloading of neutral conductors due to third harmonic currents flowing through the neutral. The size of the neutral must be increased by 150–200% of the normal size in such cases, depending upon the severity of the harmonics.
3 Higher voltage stresses, V_h (equation (23.1)) may lead to dielectric breakdown.
4 Ageing of insulation of the generator and other equipment connected to such a system.
5. Noise and resonance problems (Section 23.5.2(C)) in the electrical distribution and communication networks.
6 Problems during a parallel operation due to distorted quantities of currents and frequencies. Non-sinusoidal current will cause a non-linear impedance (mostly reactive) voltage drop on load in the generator windings. The terminal voltage will also contain harmonic quantities. It is possible that even a fast-responding AVR may not be able to maintain the required sinusoidal voltage waveform in the whole cycle and cause circulating currents. Generator manufacturers recommend that not more than 40% of such loads be connected on the system at a time, when the remaining loads are linear. To suppress the third harmonics, use of Y/Δ or Δ/Y transformers is common to feed such loads and filter out the third harmonics. For more information refer to Section 23.6.1.

For all such loads, the machines will require a derating. For appropriate selection it is therefore essential first to determine the content and magnitude of harmonics and then to consult the manufacturer for the selection of the machine. To determine the magnitude of harmonic contents, refer to Section 23.7.

16.6.3 Special loads

Loads of welding sets, which have intermittent duty cycles, are mostly single phase, cause low p.f. and stress the generator windings intermittently. Unbalanced loads, such as single phase loads, distributed unevenly cause current unbalance and low p.f.

All loads that may overstress the generator windings fall in this category and call for special consideration. The manufacturer must be consulted for the right choice of machine.

There are no ready-made formulae to deal with such a situation, except experience. It will largely depend upon the skill of the engineer to make the right choice of machine to meet the requirements in consultation with the manufacturer and also observing certain disciplines as noted above, such as maintaining the p.f. between 0.8 lagging and unity, suppressing harmonics as far as is practical, and maintaining a balance of loads. It is also desirable that neutrals are not interconnected when more than one machines is operating in parallel to eliminate circulation of third harmonic currents.

16.7 Starting of a DG set

16.7.1 Through an auto-mains failure (AMF) scheme

This is a common scheme to bring a standby DG set on line automatically on the failure of the main source of supply with the help of a battery backed-up ignition scheme. On the failure of the main supply, generally three ignition pulses are given to the engine to auto-start the machine. If the engine fails to start at three attempts, a further pulse is blocked. To start, the engine is made automatic. The generator excitation or the field current is also pre-set, which adjusts the generator voltage to the required level automatically through the AVR. Provision is also made to start it manually in case the AMF scheme fails and to also facilitate routine testing and give it more flexibility. The scheme may be briefly described as follows (see the control and scheme drawing in (Figure 16.10).

Control supply

A battery backed-up d.c. source of control supply is provided for the AMF panel and engine ignition. The control scheme, as illustrated, generally consists of a 220 or 240 V a.c. source of supply, with a transformer rectifier unit, to provide a 24 or 48 V d.c. control voltage, to charge the battery as required and a battery back-up of suitable capacity.

Selection scheme

Auto or manual selection (switch SW_2)
A switch SW_2 is provided for the selection of the engine to be started in auto or manual modes:

- **Auto mode** In auto mode the engine starts automatically on failure of the a.c. bus voltage, V_b, through an undervoltage or bus voltage relay (Relay code 27) (Figure 16.10). The relay is provided on the generator control panel with time delay contacts. Time delay is provided to allow a pause to the generator if the normal supply is quickly restored.
- **Manual mode**

Local control
In manual mode, the engine can be started and stopped locally, through a pair of start and stop push buttons Nos 17 and 18, provided on the AMF panel (Figure 16.11).

Local remote control (switch SW_3)
This is provided to facilitate the manual start and stop of the engine from a remote point such as through a remote station.

Three-attempts start

A three-attempts start facility is provided through a sequential timer (ST) in auto mode. A starting relay (SR) gives three ignition impulses to the engine. If the engine fails to start at three consecutive attempts, the starting relay (SR) automatically locks out and emits no further ignition impulse. This feature is essential to protect the engine against a possible hunting and a drain of the battery.

Switching off

Bus voltage relay (Relay code 27) provides an impulse to the generator trip circuit as soon as normal supply is restored. The generator falls out of the circuit automatically after a pause of ≃ 10–30 seconds, and the engine stops. The relay now also has a delayed feature as it had during the start, to allow a pause to the main supply in case the main supply fails quickly again.

Lubricating oil

An interlock is provided through a centrifugal type of pressure switch (PS) to trip the engine in the case of low lube (lubricating) oil pressure during a run. Since during a start oil pressure has not built up, a timer, T_1 is introduced to bypass the trip interlock and avoid a false trip. A relay (contactor), d_1, is used to provide lube oil pressure interlock.

Fuel oil solenoid valve (SV)

This is to cut off the fuel supply to the engine on a trip or a normal stop of the engine.

Speed and voltage control

Push button Nos 22 and 23 may be provided on the AMF panel and also on the remote panel to raise and lower the speed and voltage, when required to control the speed (f_1) and voltage (E_1) of the generator in order for it to be synchronized with another generator or an infinite bus.

Figure 16.10 illustrates a typical scheme incorporating all these features and interlocks.

Note

The above controls can also be achieved more precisely and almost instantly by applying the same logic with the use of PLCs, as discussed in Section 16.13.

16.8 Protection of a DG set

16.8.1 Alarm and annunciation (Figure 16.10)

Some or all of the following alarms and annunciations may be provided on the AMF panel, depending upon the size of the DG set and the type of load it has to feed to forewarn the operator, and prevent a trip:

Mechanical faults

(a) Engine fails to start
(b) Engine overspeeds
(c) Engine high water temperature and high lube oil temperature
(d) Low level of fuel
(e) Low lube (lubricating) oil pressure.

Electrical faults

(a) Overcurrent alarm
(b) Battery charger problems
(c) Overcurrent and ground fault
(d) Reverse power supply
(e) A fault condition in the differential scheme
(f) Breaker trip

Figure 16.11 illustrates a general arrangement of such an AMF panel and the above alarm and annunciation provisions.

16.8.2 Electrical protection and metering

The following protections and metering are considered necessary for a DG set:

For small ratings (say, up to 150 kVA)

(a) Short-circuit protection – through HRC fuses
(b) Overcurrent-cum-short-circuit protection, through thermal overcurrent and built-in short-circuit releases. Figure 16.12 illustrates a general protection and metering scheme.
(c) A kVAr meter to indicate the reactive power of the circuit and to take corrective steps, when necessary.

For medium ratings (say, up to 1000 kVA)

(a) **Voltage-controlled overcurrent and ground fault protection (relay Code 51N/64)** By a three-pole voltage controlled definite time delay relay with a current setting of 50–200% and a time delay range of 0.1–1 second. The relay is typical with a combination of an overcurrent-time relay and an undervoltage (u.v.) supervision unit. The purpose of the u.v. unit is to detect an u.v. due to a ground fault in the machine. During a fault the relay switches over instantaneously to a lower response current value and effects faster tripping. Typical characteristics can be
  - An overload characteristic say, 50–200%, matching the thermal withstand characteristic of the generator. This operates during an overload condition when the generator voltage is normal.
  - A ground fault characteristic determined by the u.v. unit monitoring the generator voltage. During a ground fault, causing an u.v., the same overcurrent characteristic is reduced to another set value, resulting in a faster tripping, as desired.

Note

The relay can also be selected for a phase fault.

(b) **Reverse power supply protection (Relay Code 32)** To detect a motoring action by a single-pole reverse power relay with a time setting of 2–10 seconds for

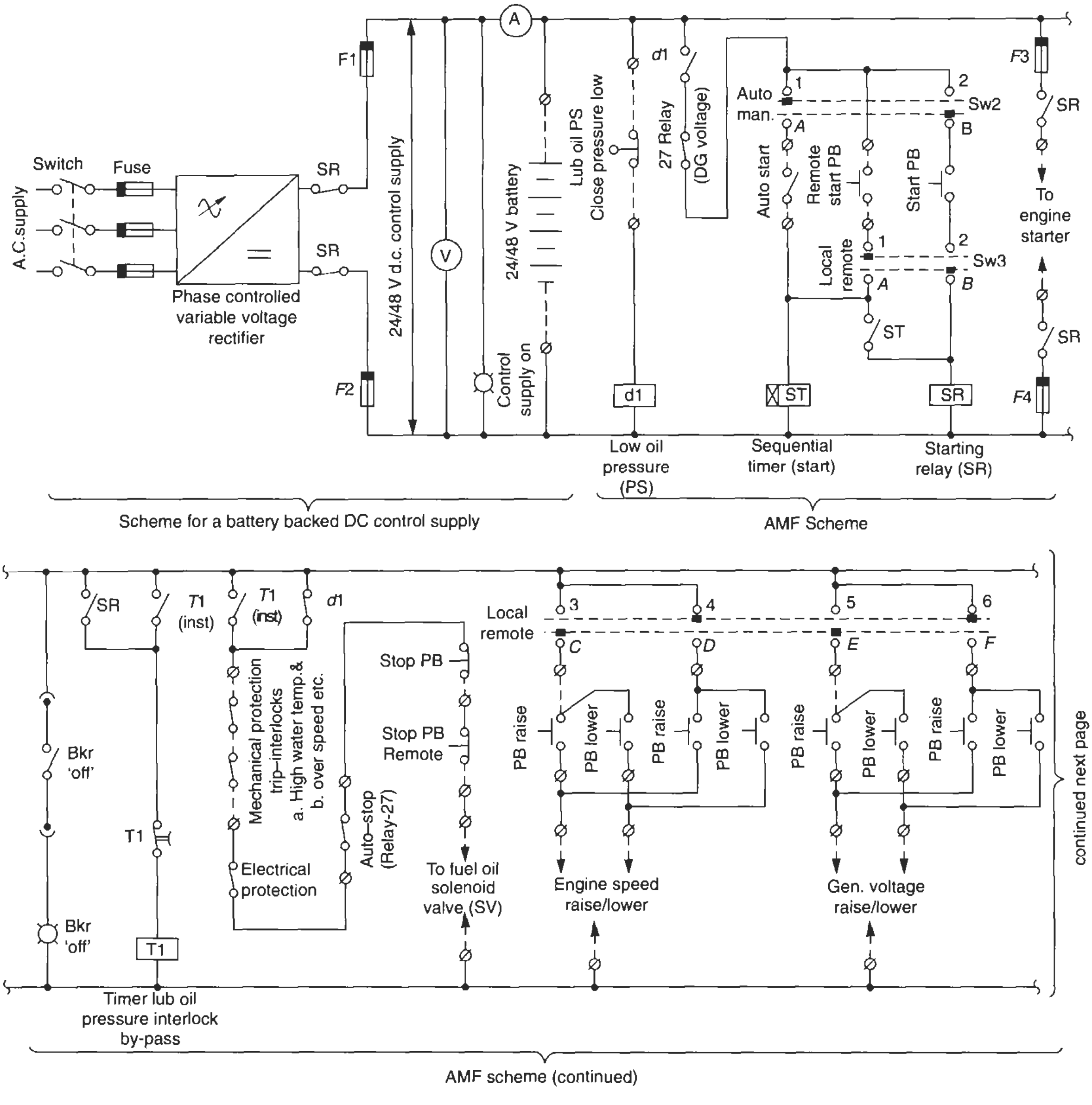

Figure 16.10 Typical control and annunciation scheme for an AMF panel

both active and reactive powers. The basic principle of the relay is to compare the current in any one phase with the voltage output across the other two phases. When the operating parameters exceed the pre-set values, the generator is switched OFF after a pre-set delay in case the operating conditions have not improved.

(c) **Differential protection (Relay Code 87)** To detect a stator phase-to-phase fault by a three-pole differential protection relay, current setting 10–40%. For scheme diagrams, refer to Section 15.6.6(1).

(d) **Overcurrent alarm (Relay Code 51A)** This may be provided to warn the operator of a likely overloading on the generator to prevent a trip and take corrective action, by promptly shedding a part of the load. The current setting of the O/C alarm relay is kept lower than the setting of the O/C trip relay, say, 105% for the alarm and 110% for the trip. A single-pole overcurrent relay with a setting of 50–200% and a time delay of 2.5–5 seconds may be considered ideal. Figure 16.13 illustrates a typical protection and metering scheme and Figure 16.11 shows the provision of these relays on the panel.

For a large power station

This is a complex subject and requires detailed engineering and application of the various protection schemes for

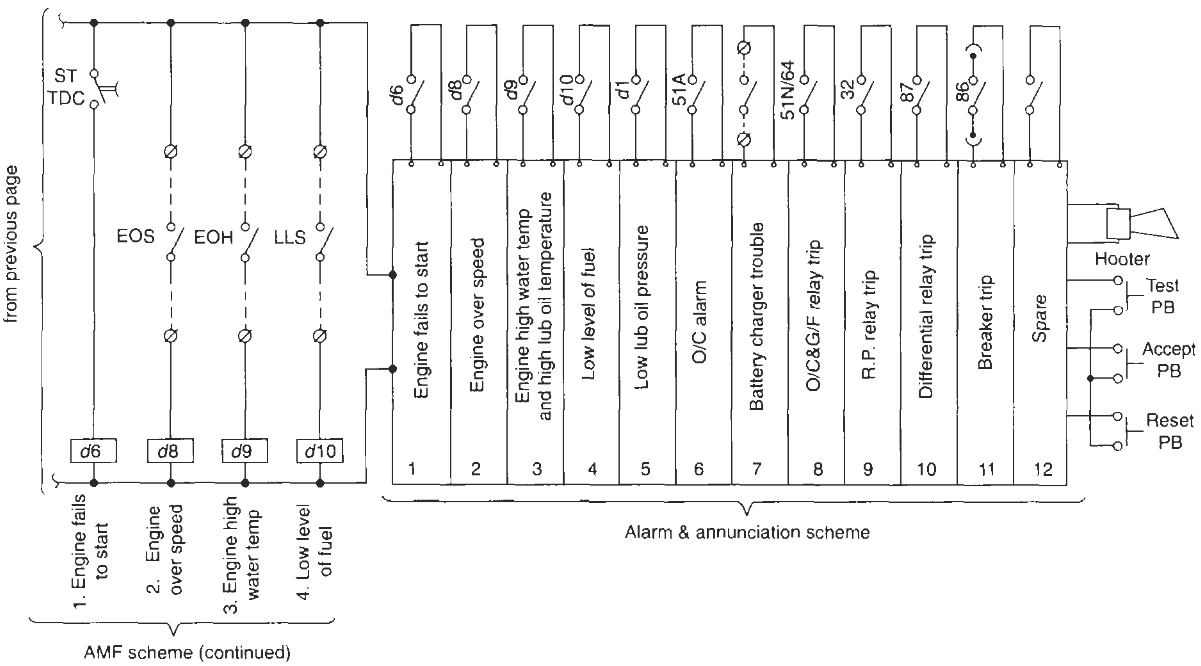

Contact development
(Sw – 2)

Knob position

	1–A	2–B	3–C	4–D	5–E	6–F
Local	Close	Open	Open	Close	Open	Close
Remote	Open	Close	Close	Open	Close	Open

Contact development
(Sw – 3)

	1–A	2–B
Auto	Close	Open
Manual	Open	Close

Figure 16.10 (*Contd*)

different operating conditions. We briefly discuss below a typical protection scheme that is generally adopted at a power station for the protection of:

- The generator
- The power station's auxiliary supply system and
- The generator supply system to the switchyard.

See Figure 13.21 showing a general power generation and transmission system. For brevity we hae restricted our discussion to the protection of the main equipment at the generating station such as the generator (G), the unit auxiliary transformers (UATs) and the generator transformer (GT), the protection of which is almost of a standard nature.

The protection of the remaining system is a matter of system design and appropriate application of the protective devices available depending upon system requirements. These three items have been taken out of the scheme of Figure 13.21 and redrawn in Figure 16.14 for more clarity.

Normal alarm schemes generally provided

(i) Stator cooling water
  - Inlet temperature high
  - Outlet temperature high
  - Rectifier temperature high

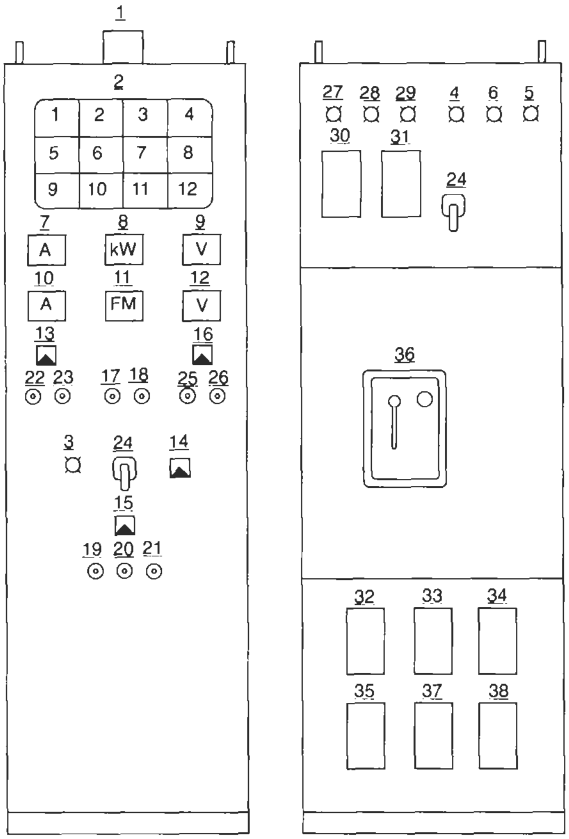

For AMF panel For generator control panel

Legend
1. Hooter
2. Annunciator
3. Control supply 'on'
4. Breaker 'on'
5. Breaker 'off'
6. Breaker 'trip'
7. D.C. ammeter
8. kW meter
9. D.C. voltmeter
10. A.C. ammeter
11. Frequency meter
12. A.C. voltmeter
13. Ammeter selector switch
14. Auto/Manual switch–Sw2
15. Local/Remote switch–Sw3
16. Voltmeter selector switch
17. Start–D.G. set
18. Stop D.G. set
19. Test P.B.
20. Accept P.B.
21. Reset P.B.
22. Engine speed raise
23. Engine speed lower
24. Breaker control switch
25. Generator voltage raise
26. Generator voltage lower
27. R–phase
28. Y–phase
29. B–phase
30. kWh meter
31. kVAr meter
32. Over current & ground fault relay (51N/64)
33. Reverse power relay (32)
34. Overcurrent alarm relay (51A)
35. Differential relay (87)
36. Incomer breaker feeder
37. Lockout relay (86)
38. Under voltage relay (27)

Figure 16.11 Typical general arrangement of an AMF panel

(ii) Hydrogen gas
  - Cooler hot gas temperature high
  - Cooler cold gas temperature high
  - Common cold gas temperature high
  - Machine gas temperature high

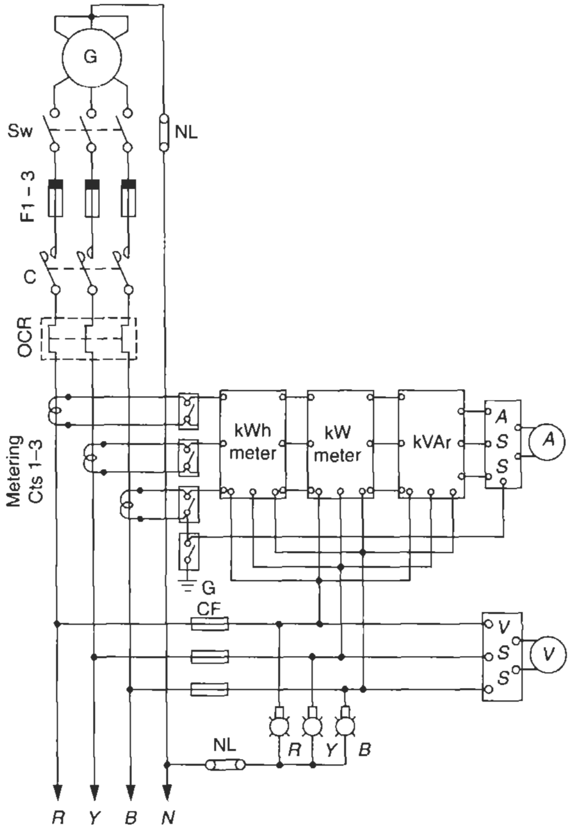

Power diagram

Figure 16.12 Protection and metering scheme for a smaller rating DG set, say up to 150 kVA

(iii) Machine temperature
  - Collector air in/out temperature high
  - Generator field temperature high
  - Stator slot temperature high

(iv) Bearing oil temperature high

(v) Vibration level, etc.

Note
See also Section 12.8 for more details.

Generator protection
The generator protection arrangements usually employed are as follows:

(a) **Impedance protection (Relay Code 21G)** Impedance protection or distance back-up protection (also termed external fault back-up protection). It is employed to protect the generator from feeding the fault on a short-circuit on an adjacent system, which may be hanging due to the failure of its own system primary protection.

(b) **Anti-motoring protection through reverse power relay or low forward power interlock (Relay Code 32-G)** The generator acts as a motor when the

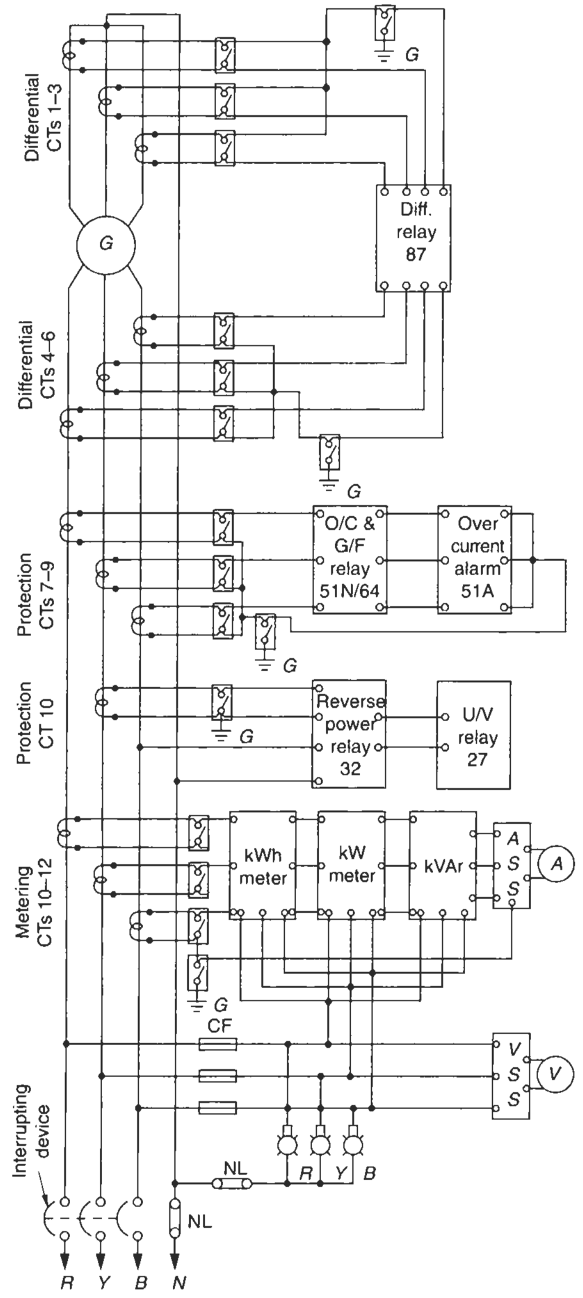

Figure 16.13 Typical power diagram illustrating electrical protection and metering for medium rating DG sets up to 500 kVA

power input to the prime mover (steam supply to the turbine in a thermal station) falls below the no-load losses of the generator. This is a corollary to an induction generator, discussed in Section 6.21. The generator being still connected to the grid will draw power from the grid through its stator windings. Since the field excitation does not change, the generator will operate as a synchronous motor and will drive the prime mover (turbine). While the generator may not be harmed by a motoring action, the prime mover may become overheated and damaged.

If the field excitation is also lost, the generator will run as an induction motor again driving the primer mover as above. As an induction motor, it will now operate at less than the synchronous speed and cause slip frequency current and slip losses in the rotor circuit, which may overheat the rotor and damage it, see also Section. 1.3 and equation (1.9). A reverse power relay under such a condition will disconnect the generator from the mains and protect the machine.

(c) **Loss of excitation or loss of field protection (Relay Code 40-G)** Loss of excitation results in a loss of synchronism and causes operation of the generator as an induction machine. It will result in the flow of slip frequency current in the rotor windings, which may damage the rotor, as noted above.

When an induction motor runs beyond the synchronous speed, it behaves like an induction generator and feeds power back to the supply system (Section 6.15). Below synchronous speed it behaves like an induction motor and draws power from the supply system. This protection trips the generator in such an eventuality and protects the machine.

(d) **Negative phase sequence protection (Relay Code 46-G)** Unbalanced loads cause unbalanced currents, resulting in negative phase sequence currents. These currents are detrimental to the generator stator and rotor windings (Section 12.2v). Their effects on a generator are similar to those on an induction motor and the protection of a generator is the same as that of a motor. Since unbalanced loads are natural phenomena in a power network, they cannot be eliminated due to single-phase loads (mostly domestic and public utilities) and many industrial loads that use static drives and distort the sinusoidal wave form (Section 16.6.2), hence this protection.

(e) **'RTD' protection through warning of winding overheating (Relay Code 49-G)** A generator is the heart of a power station and must not trip on momentary overloads. It is therefore essential that the operating conditions of a generator are closely monitored and normal operating conditions quickly restored, as far as possible, to eliminate a trip. The 'RTDs' that are placed in the slots of the stator windings can give a warning through an audio-visual alarm scheme and the operator can restore the normal conditions, if possible. The generator is allowed to exceed its rated current momentarily under the following conditions:

Time (seconds)	10	30	60	120
Generator current	226%	154%	130%	116%

Note

Overcurrent protection is normally not provided in generator and generator transformers to save the machines from likely outages on momentary overloads. In the event of overloading, the normal practice is to shed some of the loads on the transmission network.

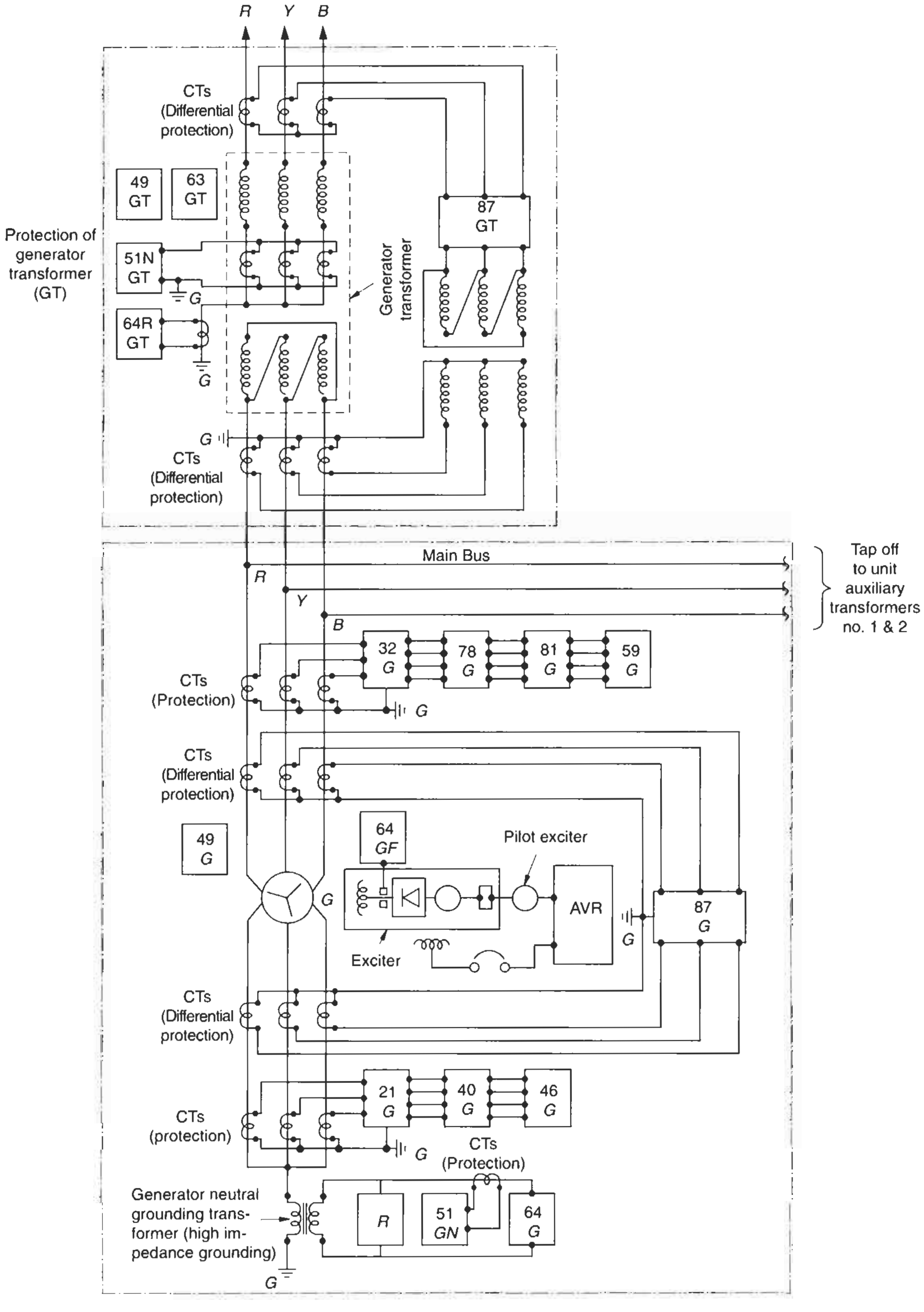

Protection of generator

Figure 16.14 (*Contd*)

Generator (G)
21–G : Impedance protection or distance back-up protection
32–G : Anti-motoring protection or low forward power protection
40–G : Loss of excitation or loss of field protection
46–G : Negative sequence protection
49–G : 'RTD' protection
59–G : Over voltage/Hz protection
64–G & : Generator stator ground
51–G fault protection
64–GF : Field ground protection
78–G : Pole slipping protection or out of step protection
81–G : Abnormal frequency operation
87–G : Differential protection

Generator Transformer (GT)
49–GT : 'RTD' protection
51N–GT: Ground fault protection
63–GT : Gas protection
64R–GT: Restricted ground fault protection
87–GT : Differential protection

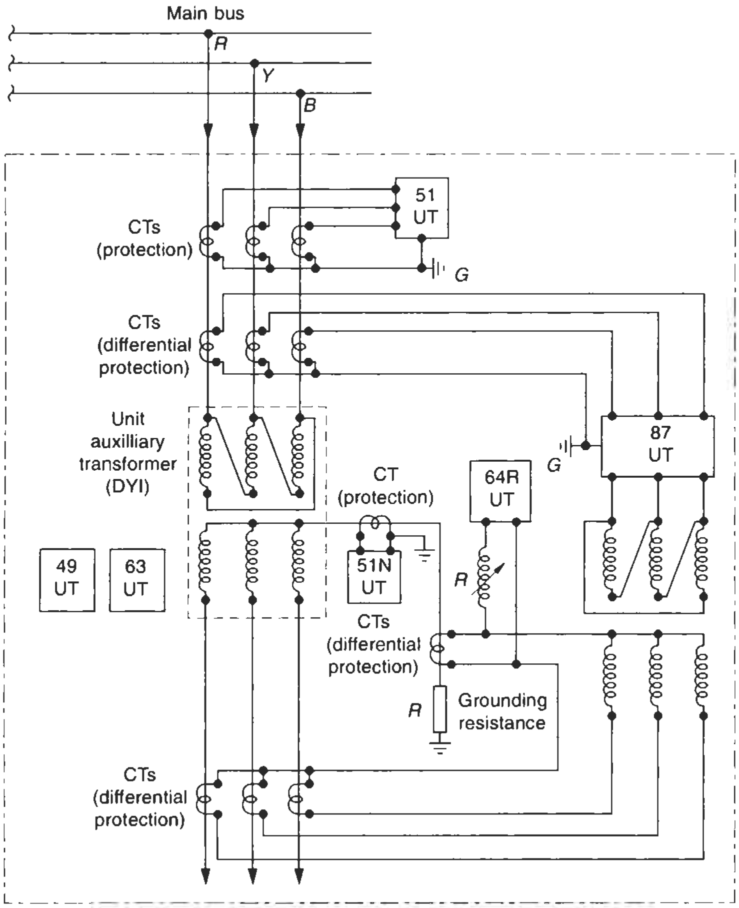

Unit auxiliary transformer (UT)
49–UT : 'RTD' protection
51–UT : Over-current protection
51N–UT : Ground fault protection
63–UT : Gas protection
87–UT : Differential protection
64R–UT : Restricted ground fault protection

Protection of unit auxiliary transformers no. 1 and 2 (shown only one transformer)

Figure 16.14 A typical protection scheme in a large generating station

(f) **Overvolts per Hertz protection (V/Hz) (Relay Code 59-G)** Per unit voltage divided by per unit frequency, called V/Hz, is proportional to flux in generator and generator-transformer cores. (See also Section 1.2, equation (1.5) and Section 6.2.2). Excessive flux can cause serious overheating of metallic parts and melting of generator core laminations. (See also Section 1.6.2. (Aiv) equations (1.12) and (1.13).) Excessive flux (V/Hz) can be caused by voltage regulator failure, load rejection or excessive excitation. Even though V/Hz is more likely to occur when generator is off-line, it can also happen when generator is on-line.

Normally a two-stage protection is provided for V/Hz protection. If V/Hz exceeds 1.18 per unit, a protection relay trips the generator within two seconds (typical). For V/Hz 1.1 to 1.18 per unit, a protection relay trips the generator within 45 seconds (typical).

(g) **Generator stator ground fault protection (Relay Codes 64-G and 51-GN)** The neutral of the generator stator normally operates at a potential, close to ground, through a high-impedance single-phase distribution-type transformer the secondary of which is shunted through a resistor that has a voltage relay device 64-G connected across the resistor. In the event of a ground fault, current flows through the resistor and the relay 64-G operates due to a voltage drop across the resistor. An overcurrent relay, 51-GN, connected to the current transformer in the secondary winding of the grounding transformer is used as back-up for 64-G relay.

(h) **Exciter protection** Protective devices are incorporated, as required for protection of the specific excitation system components and are supplied by generator manufacturers as an integral part of the excitation equipment. Some of the protective devices are

- **Field ground protection (Relay Code 64-GF)** The generator field winding is electrically isolated from ground. Therefore one ground fault in the rotor windings will usually not damage the rotor. However, two or more ground faults in the rotor windings will cause magnetic and thermal imbalances, which may result in localized heating and may damage the rotor. Protection provided in the excitation system is used to trip the generator in the event of a ground fault in the rotor windings.
- **Field overheating protection** This is a part of excitation system to prevent the field from prolonged overcurrent through an alarm or a signal. It will trip the generator only if it is absolutely essential. The field winding can carry momentary overcurrents for a short period, expressed in terms of field voltages, as noted below:

Time (seconds)	10	30	60	120
Field voltage	208%	146%	125%	112%

(i) **Pole slipping or out of step protection (Relay code 78-G)** This is a protection against loss of synchronism. It can occur as a result of steady-state, dynamic or transient instability or due to loss of excitation or out-of-phase synchronism. Out-of-step (phase) operation can result in high peaks of current and frequency, and cause winding stresses, pulsating torque and mechanical resonance. All these may endanger the generator windings. Loss of excitation relay may provide detection of such a situation, but it may not be reliable under all conditions. An MHO-type relay is generally used to protect the generator from such a situation.

(j) **Abnormal frequency operation (Relay Code 81-G)** For a generator connected to a power system, abnormal frequency operation may be the result of a severe system disturbance. An isolated unit, however, can operate at a low or high frequency, due to an incorrect speed control adjustment or a malfunctioning of the speed control device.

The generator can tolerate underfrequency operation for long periods, provided that the loads and the voltage are proportionately reduced. It can also tolerate overfrequency operation, when the voltage is within the permissible limits.

If a system disturbance requires extra generating capacity, the generator may drop speed, reducing the frequency proportionately. The under-frequency relay 81-G will detect such a condition and operate a systematic load shedding in a programmed manner in order to meet the load demand. If the abnormal condition persists, the generator is taken off the main supply system.

(k) **Differential protection (Relay Code 87-G)** Differential protection to detect stator phase-to-phase fault.

(l) **Surge protection** This is similar to that for motors (Sections 17.10 and 18.8).

Protection of unit auxiliary transformer (UT)

49-UT	RTD protection for warning of winding overheating (see also Sections 12.7 and 12.8).
51-UT	Overcurrent protection
51N-UT	Ground fault protection
63-UT	Gas protection through a Bucholz relay
64R-UT	Restricted ground fault protection
87-UT	Differential protection to detect a phase-to-phase fault.

Protection of generator transformer (GT)

49-GT	RTD protection for warning of winding overheating.
Overcurrent protection	For overcurrent protection, comments are the same as for generator protection, 49-G item 'e'
51N-GT	Ground fault protection
63-GT	Gas protection through a Bucholz relay
64R-GT	Restricted ground fault protection
87-GT	Differential protection to detect a phase-to-phase fault.

Note

Relay Code numbers are according to ANSI designations. For details refer to Appendix 2.

16.9 Parallel operation

16.9.1 Theory of parallel operation

The performance of a generator varies with its operating conditions. For instance, it is different on no-load and on-load when running in parallel with another generator. Similarly, it is different when running in parallel with an infinite bus. For a better understanding and more clarity we analyse below, the performance of an incoming generator when it is required to run in parallel with another generator or with an infinite bus. Consider two generators G_1 and G_2, operating in parallel, as illustrated in Figure 16.15, having the following parameters:

PM_1, PM_2 – Prime movers
Z_1 $(R_1 + JXd_1)$ = Impedance of generator 1
Z_2 $(R_2 + JXd_2)$ = Impedance of generator 2

Note
For more clarity, particularly for a better illustration, we consider impedances rather than only synchronous reactances, although the resistances, being small, are usually ignored.

Z_L $(R_L + JX_L)$ = impedance of the load
E_1, E_2 = e.m.f.s generated by the two generators
E_c = residual voltage across the internal circuit of the same phases of the two generators, giving rise to circulating currents.
V_b = bus voltage
f_1, f_2 = frequencies of the two machines
f_b = frequency of the bus
I_1, I_2 = Load sharing by the two generators
I_b = total load current
I_c = circulating current within the two generators' circuit.

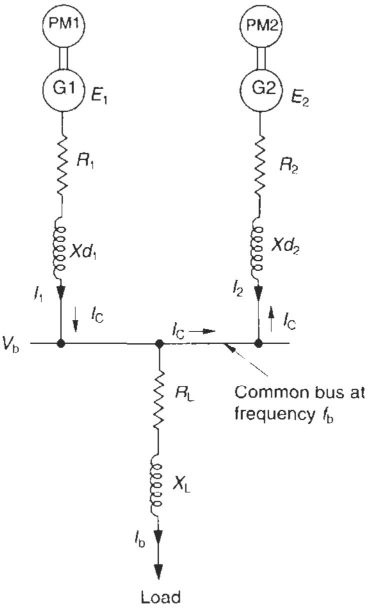

Figure 16.15 Parallel operation of two generators

Consider voltages E_1 and E_2 being equal and in phase, a condition necessary for running the two generators in parallel, i.e.

$$\bar{E}_1 - \bar{E}_2 = E_c = 0 \tag{16.1}$$

$$\bar{E}_1 - \bar{I}_1 \cdot \bar{Z}_1 = \bar{V}_b \tag{16.2}$$

$$\bar{E}_2 - \bar{I}_2 \cdot \bar{Z}_2 = \bar{V}_b \tag{16.3}$$

In what follows we consider G_1 as the incoming machine and G_2 as the machine already running, connected to the bus.

When running in parallel with another machine

A Performance on no-load

1 **By changing the driving torque or power input** Suppose the driving torque of G_1 is increased. G_1 will accelerate faster than G_2 and E_1 will advance E_2 vectorially by $\Delta\theta$, the magnitude remaining same (Figure 16.16(a)) and

$$\bar{E}_1 - \bar{E}_2 = E_c \tag{16.4}$$

E_c will cause a circulating current, I_c. The circuit diagram is drawn in Figure 16.16(b) where

$$I_c = \frac{\bar{E}_1 - \bar{E}_2}{\bar{Z}_1 + \bar{Z}_2} = \frac{E_c}{\bar{Z}_1 + \bar{Z}_2} \tag{16.5}$$

Since Z_1 and Z_2 are highly inductive, I_c may be considered lagging E_c by almost 90°, as shown in Figure 16.16(a) and

$$\bar{V}_b = \bar{E}_1 - \bar{I}_C \cdot \bar{Z}_1 \text{ (we have considered the voltage of the } G_2 \text{ bus as } V_b)$$

$$= \bar{E}_2 + \bar{I}_c \cdot \bar{Z}_2$$

If the two generators are identical, so that $Z_1 = Z_2$, then,

$$V_b = \frac{\bar{E}_1 + \bar{E}_2}{2} \tag{16.6}$$

Inference
G_1 will generate an excess power compared to G_2. Therefore while G_1 will operate as a generator, G_2, receiving power from G_1, will operate as a synchronous motor. Since G_1 is overloaded compared to G_2, it will tend to retard, and G_2, receiving power from G_1, will tend to accelerate. The net effect would be that both generators will tend to synchronize on their own once again.

2 **By changing the excitation (field current)** In the above case if the field excitation of the incoming generator, G_1, was increased, causing the terminal voltage E_1 to rise to E_1', so that $E_1' > E_2$. Then also a residual voltage, E_c, would appear across the internal

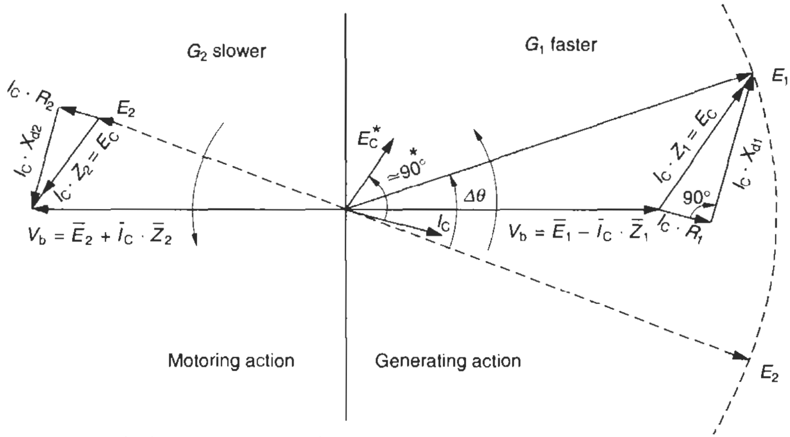

Note Magnitude of E_1 and E_2 remains unchanged
* E_C is not appearing at 90° with I_C because of $I_C \cdot R_1$ which is negligible but we have considered it to be significant for better illustration

Figure 16.16(a) Effect of increasing the driving torque on no-load (magnified representation)

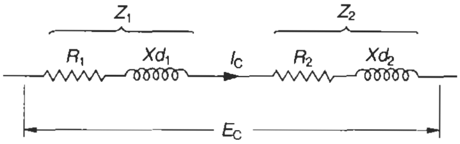

Figure 16.16(b) Residual voltage across the internal circuit of generators G_1 and G_2

circuit of the two generators. The only difference would be that now they will be in phase but different in magnitudes, i.e.

$$E_1' - E_2 = E_c$$

$$I_c = \frac{E_c}{\bar{Z}_1 + \bar{Z}_2}$$

I_c will lag E_c by almost 90° and lead E_2 by almost 90° (Figure 16.17). The net effect will be a demagnetizing armature reaction for G_1, tending to weaken its field and diminish E_1', whereas for G_2 it would be a magnetizing armature reaction, tending to strengthen its field and enhance E_2. Both machines would thus tend to synchronize once again. G_1 will now also operate as a generator and G_2 as a synchronous motor and

$$V_b = \bar{E}_1' - \bar{I}_C \cdot \bar{Z}_1$$

$$= \bar{E}_2 + \bar{I}_C \cdot \bar{Z}_2$$

If $Z_1 = Z_2$

$$\text{then } V_b = \frac{E_1' + E_2}{2} \qquad (16.7)$$

B Performance on-load

1 **By changing the driving torque or power input** The performance of two or more generators, running in parallel, on-load is not very different than analysed on no-load. A generator running in advance compared to the others would share a higher load than those running behind. The performance can be analysed more easily by referring to Figure 16.16(a).

For more clarity, consider any of the two generators to be identical and running at the same speed, generating the same voltage and sharing an equal load of, I at a lagging p.f. cos ϕ, i.e.

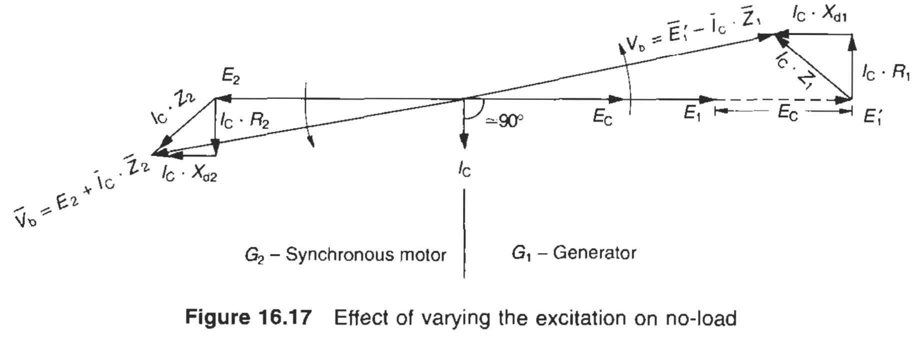

Figure 16.17 Effect of varying the excitation on no-load

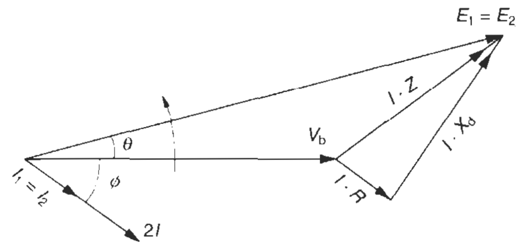

When G_1 and G_2 are sharing equally

Figure 16.18

$E_1 = E_2$, $Z_1 = Z_2$,

$I_1 = I_2 = I$, and

$I_1 + I_2 = 2I$, as illustrated in Figure 16.18

Say, G_1 is made to run a little too fast compared to G_2, by increasing its input power. A residual voltage, E_c, will appear across any two identical phases, causing a circulating current I_c, lagging E_c by almost 90°. The phasor diagram will change to Figure 16.19, which is similar to the phasor diagram of Figure 16.16(a) except the additional current phasors I_1' and I_2'. G_1, which is running ahead, will operate at a better p.f. than the other and share an extra load, equivalent to the circulating current I_c, such that it is $\bar{I}_1' = \bar{I}_1 + \bar{I}_C$. It is possible when G_1 is operating at a higher p.f., i.e. $\cos\phi_1 > \cos\phi$ and $\bar{I}_2' = \bar{I}_2 - \bar{I}_C$. It is possible when G_2 is operating at a lower p.f., i.e. $\cos\phi_2 < \cos\phi$ and $\bar{I}_1' + \bar{I}_2' = \bar{I}_1 + \bar{I}_2$, i.e. the total load current remaining the same.

An unequal load sharing may be desirable when the generators are of unequal rating or for some reasons one of them is to be loaded more or less than the other. The desired load sharing can be achieved by varying the phase shift between the excitation voltages E_1' and E_2' of the two generators as illustrated in Figure 16.19. The higher the phase shift δ, the higher will be the load shared by the generator that is running in advance, compared to the other. In what follows we consider G_1 to be faster than G_2. The phase shift can be altered by changing the engine input power. The load sharing can theoretically be determined with the help of speed (f)-load or drooping characteristics of the prime movers as illustrated in Figure 16.20.

Consider the speed–load (drooping) characteristics of the two machines as shown in Figure 16.20. For ease of illustration, the slopes have been exaggerated. Normally they are within 4% of the rated speed, as discussed earlier. When both machines are loaded equally, the total load may be defined by the load line AA', at the bus frequency, f_b. When the power input to PM_1 is increased, so that the drooping curve AO shifts to curve BO', it shifts the load line AA' also to BB', so that the total load shared by the two machines will still remain the same. The load shared by G_1 is now more than before at P_1', so that $P_1' > P_1$, and by G_2 less than before at P_2', so that $P_2' < P_2$. The generators now operate at a higher system frequency, f_{b1}. If the

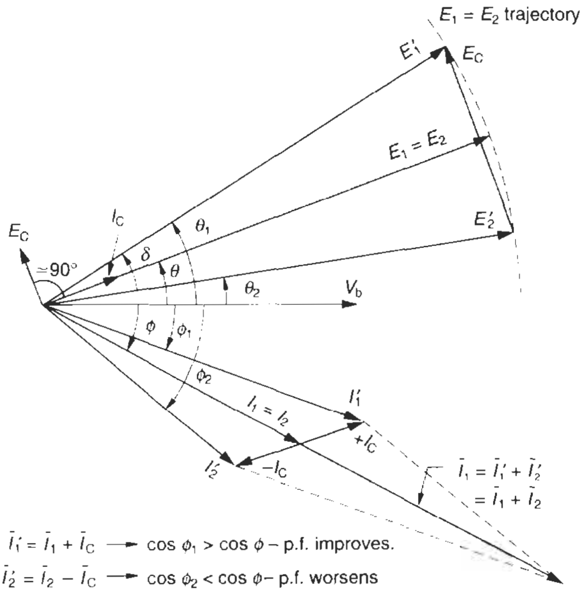

$\bar{I}_1' = \bar{I}_1 + \bar{I}_C$ → $\cos\phi_1 > \cos\phi$ – p.f. improves.

$\bar{I}_2' = \bar{I}_2 - \bar{I}_C$ → $\cos\phi_2 < \cos\phi$ – p.f. worsens

When G_1 is running faster than G_2, it shares more load

Figure 16.19 Variation in load sharing by varying the driving torque on load

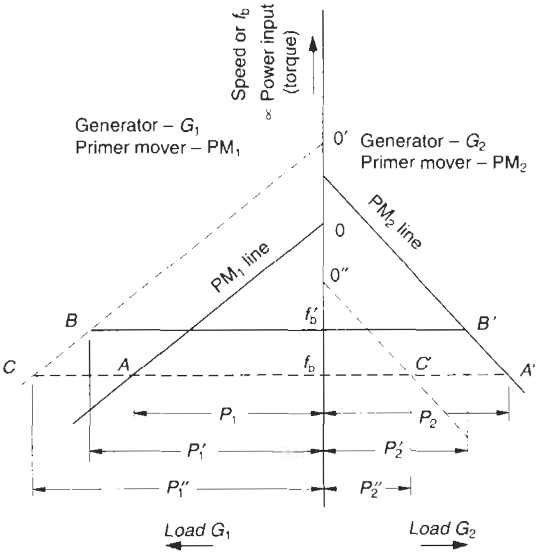

Load line AA' $P_1 = P_2 = P$
and $P_1 + P_2 = 2P$

Load line BB' $P_1' + P_2' = 2P$

Load line CC' $P_1'' + P_2'' = 2P$

Figure 16.20 Drooping curves of two machines, illustrating load sharing when running in parallel

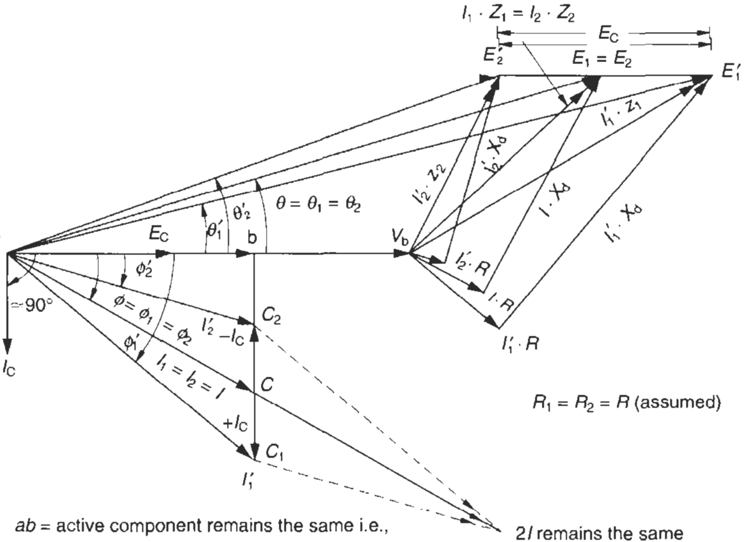

ab = active component remains the same i.e.,
$I \cdot \cos\phi = I_1' \cdot \cos\phi_1' = I_2' \cdot \cos\phi_2'$
bc, bc_1 and bc_2 = only reactive components vary

Figure 16.21 Variation in the load currents with a change in the field excitation on load

system frequency is required to remain constant at f_b it will be essential to reduce the power input to PM_2, so that the drooping curve of PM_2 shifts below to $O''C'$ and the load line to CC' at the original frequency f_b, delivering the same total load yet again. The load shared by G_2 is now still lower than before.

The load sharing by the two machines can thus be varied by shifting the drooping curves of the prime movers by altering their power input.

2 **By changing the excitation (field current)** Now that the engine input is not varied, there is no variation in the load sharing by the two machines. It is the basic theory of change in the field excitation. Since a change in the excitation causes a variation in the generated e.m.f.s (E_1 and E_2), the variation in voltage causes a corresponding rise or fall in the reactive component of the current. $EI \cos\phi$ will remain the same, except the variation in the copper losses ($I_c^2 R$), which may vary the load sharing, marginally up or down, depending upon whether it supplies I_c or receives. For instance, at higher excitation, the e.m.f. will rise and so will the load current, but at a lower p.f. the generator will have to feed extra losses and thus share a marginally lower load than previously.

To illustrate the above, consider Figures 16.15 and 16.21. Assuming that both machines were equally loaded, an increase in excitation of G_1 will increase E_1 to E_1', which will tend to increase V_b as noted in equation (16.7). A corresponding decrease in excitation of G_2 from E_2 to E_2' can, maintain the same level of V_b, as illustrated in Figure 16.21. The phasor difference between $\overline{E_1'}$ and $\overline{E_2'}$ i.e. E_C, will give rise to a circulating current I_C, lagging E_c by almost 90°, as noted above and illustrated in Figure 16.21. The load sharing can now be computed as follows.

Assuming that the above change in the excitation causes the following changes in the basic parameters

(i) I_1 to I_1' at a p.f. $\cos\phi_1'$
(ii) I_2 to I_2' at a p.f. $\cos\phi_2'$

then $\bar{I}_1' = \bar{I}_1 + \bar{I}_C$

$$I_1' \cos\phi_1' = I_1 \cos\phi_1 = I \cos\phi$$

$$I_2' = \bar{I}_2 - \bar{I}_C$$

$$I_2' \cos\phi_2' = I_2 \cos\phi_2 = I \cos\phi$$

The active components will thus remain same, and only the reactive components $I_1' \sin\phi'$ and $I_2' \sin\phi_2'$ will vary.

Note
If the machines were loaded unequally before making a change in the excitation, the same ratio of loading would continue even after the change in the excitation of both machines provided that V_b remains the same, i.e

$$V_b = \bar{E}_1 - \bar{I}_1 \cdot \bar{Z}_1 = \bar{E}_2 - \bar{I}_2 \cdot \bar{Z}_2$$
$$= \bar{E}_1' - \bar{I}_1' \cdot \bar{Z}_1 = \bar{E}_2' - \bar{I}_2' \cdot \bar{Z}_2$$

If E_1 rises further, it will do so at still lower p.f.s and E_2 will have to be further reduced to maintain the same V_b at yet higher p.f.s to maintain the same level of active component and vice versa.

Conclusion
With the change in excitation, only the reactive power, kVAr and the terminal voltages E_1 and E_2 altered can be without altering the active components of the load currents or the power shared by the two machines. As discussed in Section 16.3.2, a generator is designed for a particular p.f. (0.8 lagging), having a defined value of kVAr. A

reactive power higher than rated would cause reactive overloading of the machine and cause reactive circulating currents. It would seriously affect the performance of the machine. There is therefore only limited scope in varying the excitation level of a generator.

When synchronizing with an infinite bus

A bus maintaining constant V_b and f_b, irrespective of a variation in the loads connected on it, is called an infinite bus. An incoming generator would cause no change in these parameters, unlike, when the two machines were required to run in parallel. The performance of an incoming machine would therefore now be different than previously.

Earlier a change in its input power or excitation would vary the output, frequency or the voltage of the other machine. There is no such influence on an infinite bus.

C Performance on no-load

1 **By changing the driving torque or power input** The situation as noted earlier would occur. If the generator G_1 accelerates faster and its voltage E_1 gets ahead of V_b vectorially, the magnitude remaining the same, Figure 16.16(a) would generally apply, without the phasor E_2, (Figure 16.22):

$$\bar{E}_1 - \bar{V}_b = \bar{E}_c$$

$$I_c = \frac{E_c}{Z_1} \text{ (for an infinite bus, } Z_2 \text{ may be considered to be zero) and}$$

$$V_b = \bar{E}_1 - \bar{I}_C \cdot \bar{Z}_1$$

If E_1 is slower and falls behind V_b vectorially, then G_1 will operate as a synchronous motor and receive reactive power $I_c^2 Z_1$, from the infinite bus (Figure 16.23) since $V_b = \bar{E}_1 + \bar{I}_c \bar{Z}_1$.

2 **By changing the excitation (field current)** The same situation would occur as noted above, if the excitation of G_1 is increased from E_1 to E_1'. Then

$$E_1' - V_b = E_C$$

$$I_c = \frac{E_c}{Z_1} \quad (Z_2 = 0)$$

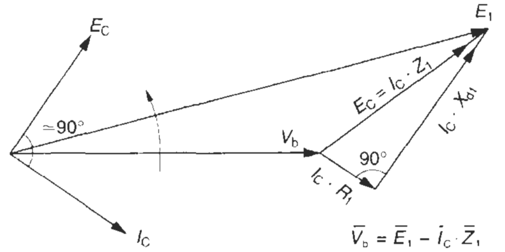

G_1 faster and E_1 ahead of V_b

Figure 16.22 Effect of changing the driving torque of G_1 on no-load

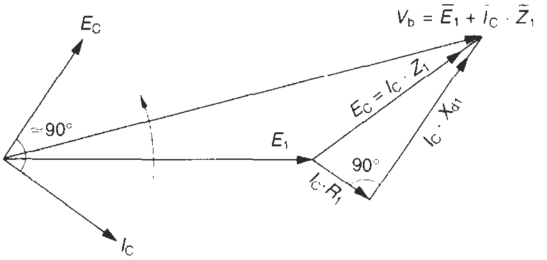

G_1 slower and E_1 falling behind V_b
(Operating as a synchronous motor)

Figure 16.23 Effect of changing the driving torque of G_1 on no-load

I_c would lag E_c by almost 90° and lead V_b by almost 90° (Figure 16.24(a)). The net effect would be a demagnetizing armature reaction for G_1, tending to weaken its field, diminish E_1' and synchronize it with the infinite bus once again.

If E_1 is reduced to E_1' then,

$$V_b - E_1' = E_c$$

The direction of current would reverse, and I_c would lead E_1'. G_1 now, instead of supplying the reactive power to the bus, would receive reactive power and operate as a synchronous motor. Theoretically, the armature reaction, being magnetizing, would tend to strengthen its field, enhance E_1' and help to synchronize G_1 once again with the infinite bus (Figure 16.24(b)). But such a situation may not occur unless the generator is designed for a leading p.f., as noted earlier.

When, however, E_1 is equal to V_b and in phase, E_c will be zero and there will be no current from G_1 to

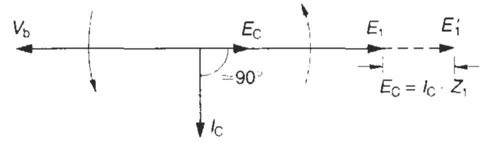

(a) When $E_1' > V_b$, G_1 operates as generator

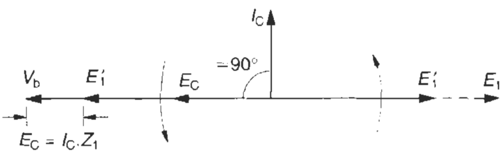

(b) When $E_1' < V_b$, G_1 operates as synchronous motor

(c) When $E_1' = V_b$, $E_C = 0$ and $I_C = 0$, G_1 floats on the bus

Figure 16.24 Effect of varying the excitation on no-load the bus or vice versa. The machine will only float on the bus and the PM_1 will be supplying only the mechanical losses, (Figure 16.24(c)).

D Performance on-load
(Considering G_1 as the incoming machine and referring to Figure 16.15)

1 By changing the driving torque or power input

Fixed parameters $V_b, f_b, Z_b = O$, and Z_1
Variable parameters I_1 and $\cos\phi_1$, while E_1 will have a fixed magnitude but variable phasor disposition.

When the power input to PM_1 is increased, the output of G_1 increases. Since E_1 is constant at a particular excitation, it changes its phasor location only with respect to V_b. With a change in power input, therefore. E_1 traverses through a fixed trajectory as shown in Figures 16.25 a and b, and with it changes its load angle, θ_1, load current, I_1 and p.f. $\cos\phi_1$. We have considered four possible conditions, to define the performance of the machine, under different levels of power input:

- **When E_1 is ahead of V_b** At a load angle θ_1 the load current, I_1, will lag V_b by an angle ϕ_1 (refer to Figure 16.25(a)). I_1 is still considered to be lagging E_c' by almost 90°, although it may be better on load.
- With the increase in the power input, E_1 will advance further and improve its p.f. At one stage, the p.f. will become unity and beyond this it will start leading (Figure 16.25 (b)). Incidentally, the maximum p.f. is achieved when the load angle θ_1 becomes 90°, which is also the limiting stage, beyond which it would become an unstable region, as the exciter would cease to exercise any control over the voltage. At this point, refer to parameters E_1', E_c', I_1', ϕ_1' and θ_1' as 90°.

  Any condition beyond unity p.f., i.e. $\phi_1 > 0$, would mean I_1 leading and can compensate the reactive power of the system and improve its p.f. The machine is now called a synchronous condenser (capacitor), which besides supplying power to the main bus, will also improve the system p.f. The above, however, is only a theoretical analysis. A generator designed for 0.8 p.f. lagging is not suitable to operate at a leading p.f., as the excitation system would cease to exercise any control over the voltage. The voltage rises rapidly beyond unity p.f. as a result of positive armature reaction (Section 16.4). When a generator is required to operate at leading p.f.s, its field system must be designed for leading p.f.s.
- When, however, the power input to PM_1 is reduced, G_1 will gradually offload. Consider the situation when E_1, falls in phase with V_b. (Refer to parameters E_1^0, E_c^0, $\theta_1^0 = 0$ and I_1^0 at ϕ_1^0 in Figure 16.25(b).) G_1 will now feed no power to the bus, nor receive any power from it. G_1 is now termed as floating on the bus and the PM_1 supplies primarily only its no-load losses.
- For the sake of argument, if the power input is reduced further, say by removing PM_1 totally from the generator, E_1'' will fall behind V_b and I_1'' will lead V_b. (Refer to parameters E_1'', E_c'', θ_1'' and

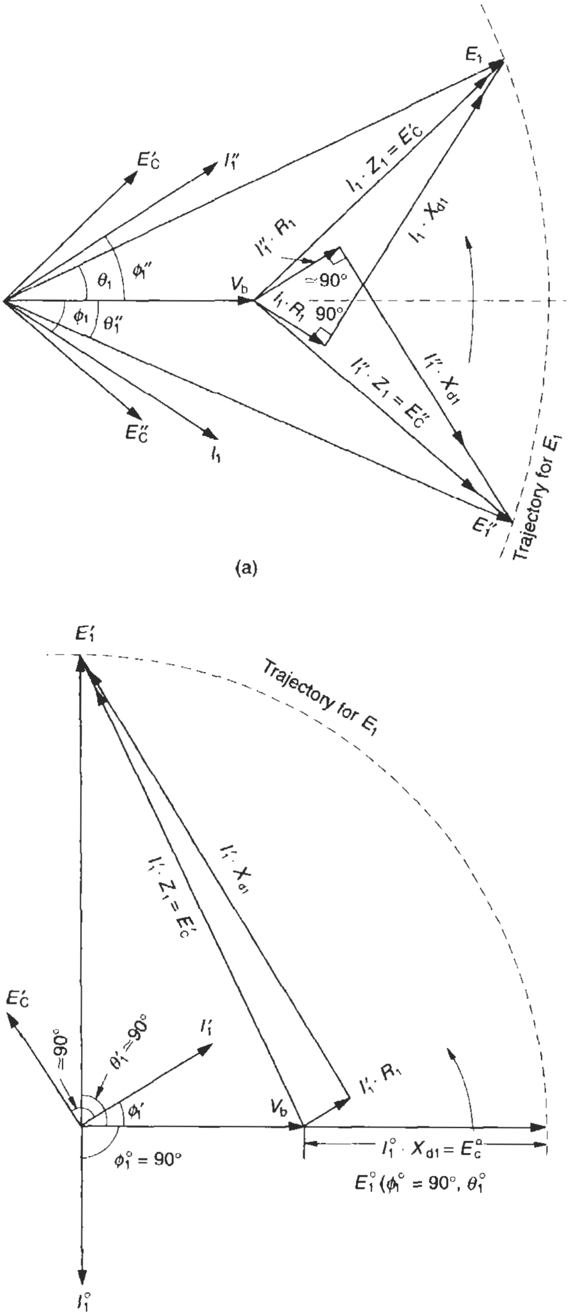

Figure 16.25 Performance of generator G_1 by varying its driving torque on load

I_1'' at ϕ_1'' in Figure 16.25(a).) The machine will now operate as a synchronous motor rather than as a generator and will absorb reactive power from the bus. Since the generator operates once again at leading p.f.s, the same condition will apply as noted above.

2 **By changing the excitation (field current)**

Fixed parameters V_b, f_b, $Z_b = 0$ and Z_1
Variable parameters E_1, I_1 and $\cos\phi_1$

The same theory would apply as discussed above in the case of two generators. Since there is no variation in the power input to PM_1, the output of generator G_1 will remain the same, except for the marginal variation in the copper losses as noted earlier:

$$\therefore \quad I_1 \cos\phi_1 = I_1' \cos\phi_1' = I_1'' \cos\phi_1'' = \text{constant}$$

In other words, for the same bus voltage, V_b, the active component of the current for G_1 would remain the same while the reactive component $I_1 \sin\phi_1$, $I_1' \sin\phi_1'$ or $I_1'' \sin\phi_1''$ and therefore the reactive power (kVAr) would continue to vary. A change in excitation will change E_1 and its load angle θ_1 (Figure 16.26(a)) and consequently will change I_1 and its p.f., $\cos\phi_1$. The following possibilities may arise:

- When G_1 operates at unity p.f. is the most ideal condition. The generator will now deliver its maximum power at the least current value. The machine is least stressed for its best performance. G_1 is ahead of the bus and is only sufficiently excited such that $\cos\phi_1 = 1$ and

$$E_1 = \bar{V}_b + \bar{I}_1 \bar{X}d_1 \text{ or } E_1 \cos\theta_1 = V_b$$

- When G_1 is overexcited, E_1 rises to E_1' and the machine starts to operate at lagging p.f.s, so that $E_1' \cos\theta_1' > V_b$ and $\cos\theta_1' > \cos\theta_1$.
- When G_1 is underexcited, E_1 will reduce to E_1'' and the machine will start to operate at leading p.f.s, so that $E_1'' \cos\theta_1'' < V_b$ and $\cos\theta_1'' < \cos\theta_1$. All these conditions are illustrated in Figure 16.26(a). In all three cases, the active component of current, *OA*, remains the same. A higher current than the active component, either lagging or leading, is a loss component. It is desirable to operate G_1 as close to unity p.f. as possible to keep this component at its lowest. The variation in the generator current, I_1 versus field current, is shown in Figure 16.26(b). When the current I_1 is leading, the machine absorbs reactive power and operates as a synchronous condenser and in addition to supplying its active power to the system also improves the system p.f. But, as noted above, for operating a generator as a synchronous condenser, its field system has to be designed accordingly.

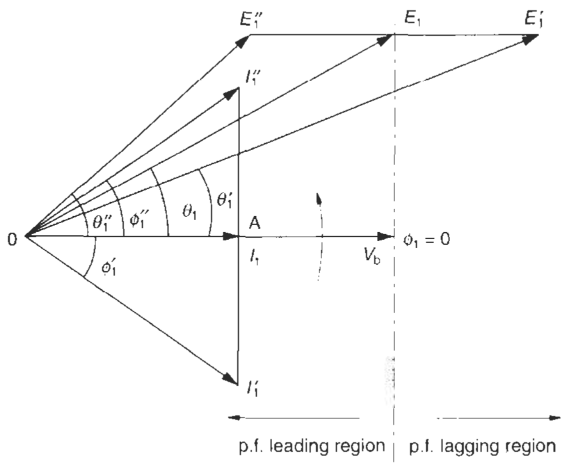

Figure 16.26(a) Phasor diagram

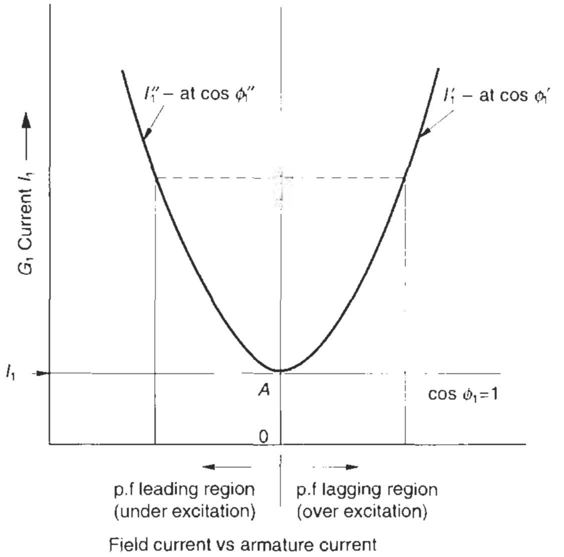

Figure 16.26(b) Variation in the load current of G_1 with the change in the excitation on load

16.10 Procedure of parallel operation

16.10.1 Synchronization

Before switching an incoming generator on an existing source, which can be another generator or an infinite bus, it is essential to first fulfil the following basic conditions, to avoid a possible voltage or current transient condition which may occur and cause electrodynamic forces in the generator and damage its armature or affect adversely other machines, connected on the system or the bus system itself.

1 The phase sequence of the incoming machine must be the same as that of the existing source (Figures 16.27(a) and (b)).
2 The terminal voltage, E_1, of the incoming machine must be almost the same as that of the other machine, E_2 or the bus, V_b (Figure 16.27(c)), i.e.

$$E_1 = E_2 \text{ or } V_b$$

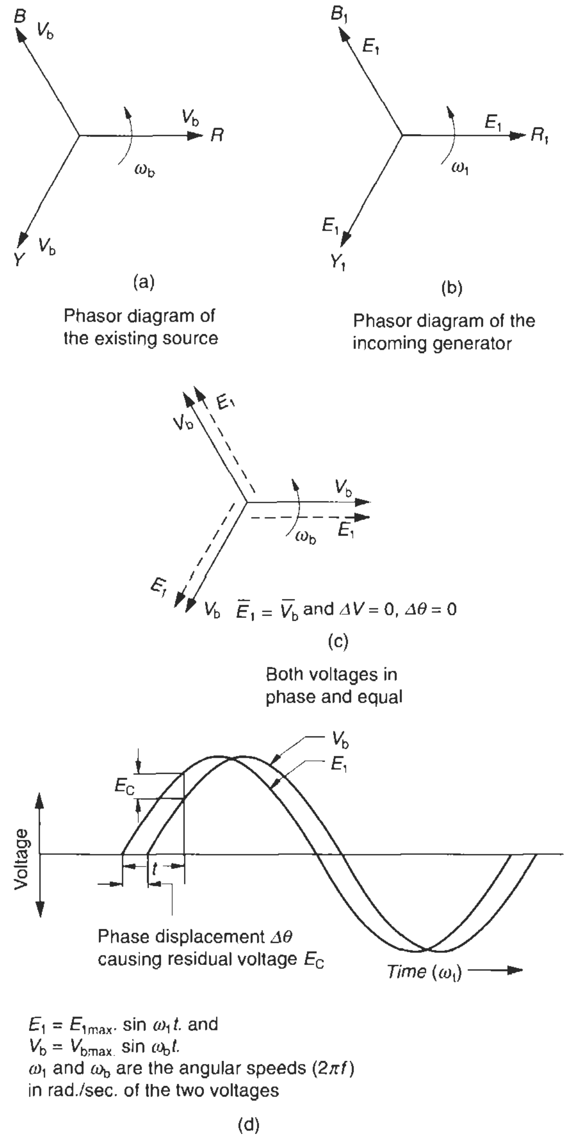

(a)
Phasor diagram of the existing source

(b)
Phasor diagram of the incoming generator

(c)
Both voltages in phase and equal

Phase displacement $\Delta\theta$ causing residual voltage E_C

$E_1 = E_{1\max}. \sin \omega_1 t.$ and
$V_b = V_{b\max.} \sin \omega_b t.$
ω_1 and ω_b are the angular speeds ($2\pi f$) in rad./sec. of the two voltages

(d)

Figure 16.27 Phase sequence and phase displacement

and $\Delta V = E_1 - E_2$

or $\Delta V = E_1 - V_b$

where ΔV = difference in magnitudes of the two voltages. Permissible variation: ΔV = within 1% of V_b or E_2.

3. The frequency of the incoming machine, f_1, must be almost the same as that of the other machine, f_2, or the bus, f_b. Permissible variation: Δf = within 0.15 Hz.
4. To check the phasor difference, if any, between E_1 and E_2 or V_b to check $\Delta\theta$ (Figure 16.27(d)). $\Delta\theta$ gives rise to residual voltage EC, which is responsible for the circulating current I_c. (Section 16.9, equation (16.5)). Permissible variation: $\Delta\theta$ = within 7°.

Hunting

Any error beyond permissible limits in ΔV, Δf, or $\Delta\theta$ may cause a shock and disturbance to the incoming machine and the existing system. $\Delta\theta$ and Δf may cause hunting which makes the rotor swing even beyond its synchronous speed as a result of its own inertia. But this develops an opposing torque too which retards these overswings. Thus, while hunting would attenuate on its own, the machine would supply and absorb large amounts of power alternately during the course of hunting. As the mechanical forces are proportional to the square of the current drawn by the machine at a particular instant ($F \propto I^2$, equation (28.4)), they may be associated with large current transients. The duration of such a situation would play a very significant role in the stability of the system and the safety of the incoming machine. This situation must be dealt with as quickly as possible. Hence the importance of keeping these variables as low as possible, and reaching a stable state in only two or three cycles after synchroniza-tion. Thus such reversals of mechanical forces of the rotating masses are more important, rather than the magnitudes of the torques that the machine will have to sustain. In large power stations, where such forces may assume very high proportions, because of large sized machines, they may even upset the normal supply system by severe power fluctuations, outage of the system or overstressing of the incoming machine through its stator and the rotor. For the significance of Δf or $\Delta\theta$ refer to Figures 16.31(a) and (b). To achieve the required conditions of synchronization the following procedure may be adopted.

To check the phase sequence
This can be checked with the help of a phase sequence indicator. This is a simple instrument that houses a small 3ϕ motor, which rotates a pointer connected to the motor through a gearbox. The direction of rotation of the pointer will determine the phase sequence of the system.

To check the terminal voltage and frequency
Figure 16.28 suggests a simple method to measure the terminal voltage E_1 and the frequency f_1 of the incoming machine:

1. The voltage can be lowered or raised by varying the field excitation through the AVR of the machine. Any difference in the voltage of the incoming machine with the voltage of the existing system will result in ΔV and $\Delta\theta$.
2. The frequency can be lowered or raised by changing the speed of the engine by varying its power input, i.e. by controlling its fuel supply (diesel in a DG set, water in hydro and steam in thermal generation). Any variation in frequency will also cause a residual voltage, E_c, and Figure 16.27(d) would apply,

   where $E_c = E_{1\max.} \sin \omega_1 t - E_{2\max.} \sin \omega_2 t$ etc.

   when $E_1 = E_2$ or E_b

   $E_c = E_{1\max} (\sin \omega_1 t - \sin \omega_2 t)$

and the frequency across the incoming generator breaker

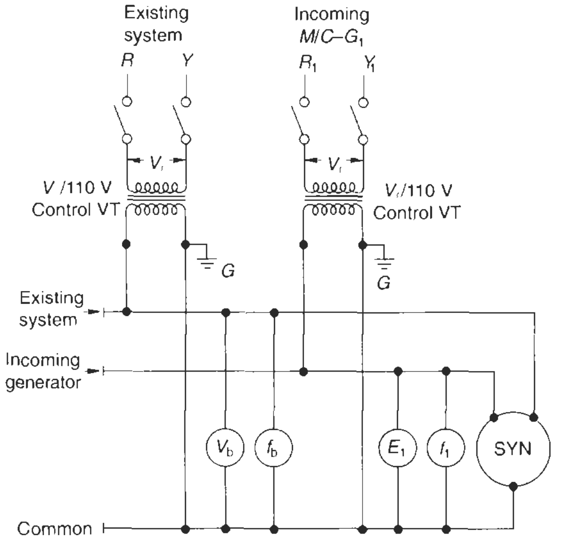

V_b/f_b : Existing voltage and frequency-meters
E_1/f_1 : Incoming voltage and frequency-meters
SYN : Synchroscope

Figure 16.28 Circuit to check V and f

will be $(f_1 + f_2)/2$ when it is operating in parallel with another generator. In an infinite bus, the bus frequency, f_b, will prevail (Section 16.9.1 C and D).

To check the phase difference
Some methods to do this are noted below:

1 Voltmeter method
2 Dark lamp method
3 Synchroscope method.
4 Check synchronizing relay
5 Auto synchronization

1 Voltmeter method (Figure 16.29)
The incoming machine is brought up to its synchronous speed by controlling the torque or power input to the engine and the voltage to the required level with the help of the AVR (Figure 16.6). When the line voltage of the incoming machine and the other source are the same and fall almost in phase with each other, i.e. when the cumulative effect of ΔV, $\Delta\theta$ and Δf fall within permissible limits, the three synchronizing voltmeter readings will read almost zero. This is the condition when the synchronizing switch or the incoming machine breaker can be closed.

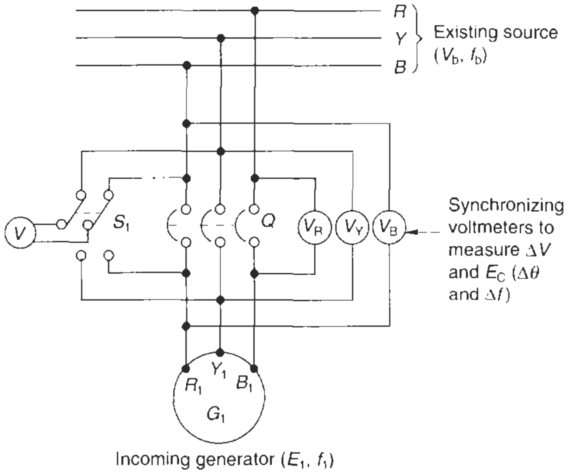

S_1 – Double throw switch
Q – Generator breaker
V – To compare voltages of the two sources

Figure 16.29 Synchronizing by the voltmeter method

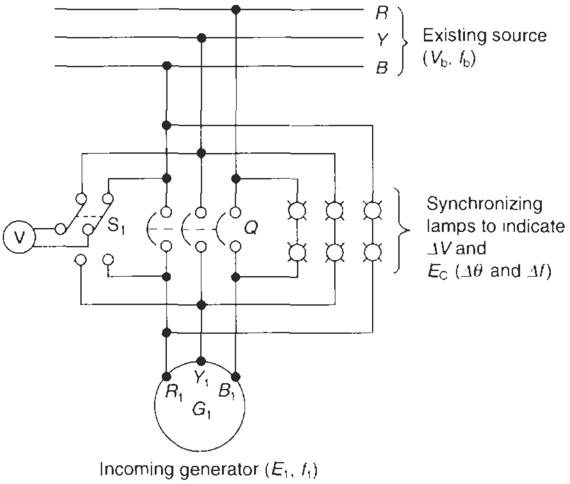

S_1 – Double throw switch
Q – Generator breaker
V – To compare voltages of the two sources

Figure 16.30 Synchronizing by the dark lamp method

2 Dark lamp method (Figure 16.30)
This is a simpler method to check the phase displacement between the incoming and the existing voltage. Normally two lamps are connected in series to make them suitable for 480 V as shown to withstand the maximum line voltage, in case the two voltages fall 180° apart. This voltage, ΔV can rise to

$$\frac{(E_1 + V_b)}{\sqrt{3}} \quad \text{or} \quad \frac{2Vb}{\sqrt{3}}$$

$$\left(\text{i.e. } 2 \times \frac{415}{\sqrt{3}} \text{ or } 480\text{ V for a } 415\text{ V system}\right)$$

This is a better method, for it can compare both frequency and phase displacement of the two voltages, as Δf would also result in E_c and is reflected by the flickering of the lamps. If the frequencies f_1 and f_b are not equal, the lamps will flicker at the rate Δf, i.e. $(f_1 - f_b)$ times per second. For example, for a difference of 2 Hz the lamps will flicker twice every second.

In both the above cases the following will occur when the generator breaker is closed and the frequency of the incoming machine f_1 is not equal to the frequency of the existing source f_b. For ease of explanation, we consider the dark lamp method. In the voltmeter method it is the voltmeter needle that will flicker rather than the lights.

- E_C will appear across each phase (Figure 16.31(a)) and the lamps will flicker at $(f_1 - f_b)$ per second. When the phasors E_1 and V_b are closer, the brightness will be the least (Figure 16.32) and when they are widest apart, it will be the maximum (Figures 16.31(b) and 16.33). To attain $E_c = 0$, i.e. $\Delta\theta = 0$, it is essential that E_1 and V_b are in phase.
- There will thus be a momentary bright and mostly dark period every second. During the dark period the two voltages are either in phase or are very close to each other, such that the residual voltage E_c is inadequate to make the lamps glow. When the lamps are dark, somewhere during the middle of the dark period, is the ideal instant when the incoming machine can be synchronized with the existing source by closing its breaker. This is the condition illustrated in Figure 16.32. The rest of the performance of the incoming generator is explained in Section 16.9.1, while dealing with the behaviour of a generator during a parallel operation.

There is, however, a disadvantage in the dark lamp method as when E_c is, say, less than 60% of E_2 or V_b (an incandescent lamp does not glow at less than 30% of its rated voltage and there are two such lamps in series) the lamp will stay dark. A slight misjudgement may close the generator breaker when E_c may be large enough (up to 0.6 times or so of V_b) across the generator windings to cause a dangerous situation, as discussed earlier.

Before closing the breaker it is also essential to know, whether the incoming machine was running a little too fast or too slow. As discussed in method 5, the incoming machine must run a little too fast compared to the machine already running or the infinite bus while being synchronized. When so it will share a part of the existing load, no sooner it is synchronized and fulfils the purpose for which it is being synchronized with the existing source. To ascertain this before synchronizing, increase the speed of the incoming machine. An increase in the flickering of the lamps will indicate a faster machine, while a decrease will indicate a slower machine. Paralleling of a slower machine is not desirable, as it may draw power from the existing source and operate as a synchronous motor rather than a generator and defeat the purpose of paralleling.

3 Synchroscope method

This is the simplest method of all. A synchroscope is an instrument that compares the speed (i.e. the frequency) of the incoming machine, f_1, with the frequency of the existing source, f_b (i.e. Δf) and is in the form of a rotating pointer which rotates at a speed proportional to the difference in the two frequencies. If the incoming machine is running a little too fast, it will have a clockwise rotation and if it is a little too slow, it will show a counter-clockwise rotation. The incoming machine will be synchronized only when it is a little too fast and the pointer rotates clockwise at a very slow speed, i.e. when the frequency of the incoming machine is too close to the other source and a little too high. The machine may be quickly synchronized at the instant when the pointer moves through its zero axis, as illustrated in Figure 16.34. For an accurate closing, an indicating light is normally provided in the instrument that glows at every zero, the instant at which the machine must be synchronized. Figure 16.34, suggests a simple connection diagram of a synchroscope.

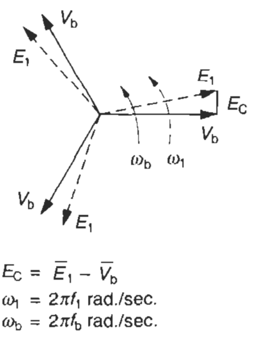

Figure 16.31(a) Residual voltage E_c across each phase when f_1 is not equal to f_b

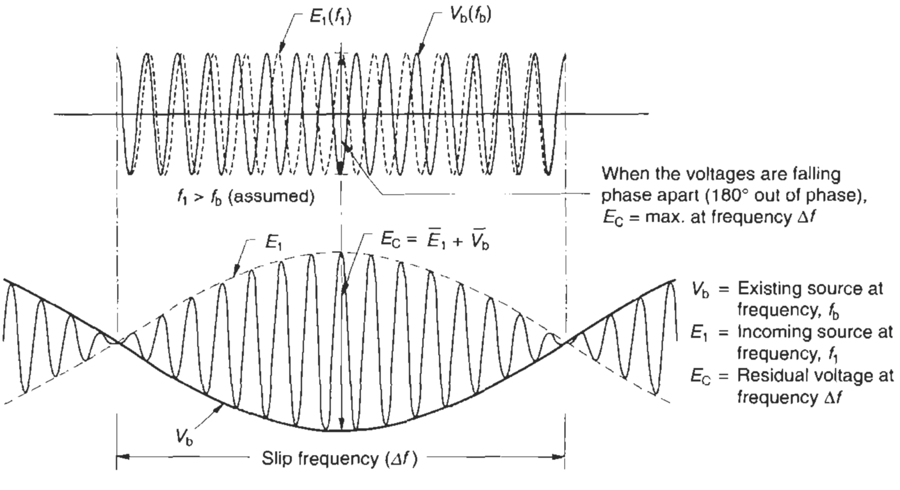

Figure 16.31(b) Magnified representation of a frequency error Δf

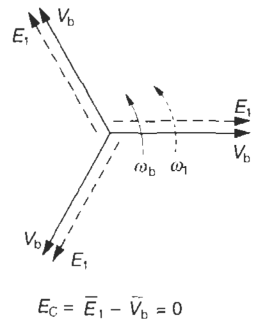

Figure 16.32 Residual voltage is zero when E_1 is in phase with V_b

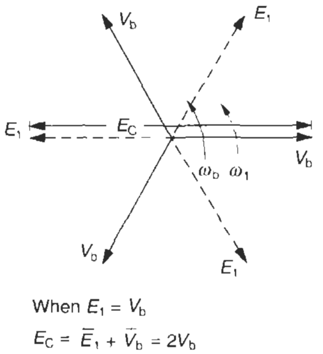

Figure 16.33 Residual voltage is maximum when E_1 is phase apart with V_b

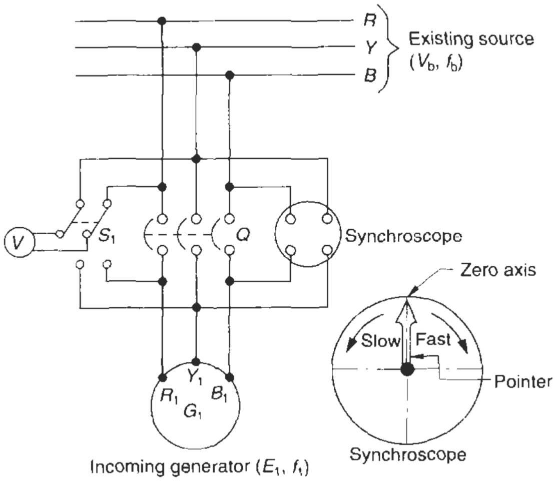

S_1 – Double throw switch
G_1 – Incoming machine (E_1,f_1)
Q – Generator breaker
V – To compare voltages of the two sources

Figure 16.34 Connection of a synchroscope

4 *Check synchronizing relay (Relay Code 25)*
The purpose of this relay is to check the accuracy of manual synchronizing. It basically checks Δf, ΔV and $\Delta\theta$ between G_1 and the existing source, as is done by a synchronizing monitoring relay. When the quantities fall within the permissible limits, the relay unlocks the G_1 breaker and only then may the machine be synchronized manually. It is a preferred practice to use such a relay as a safety precaution for manual synchronizing, to double-check the pre-set quantities of Δf, ΔV and $\Delta\theta$, to prevent inadvertent synchronization, particularly because of the lead time required to close the breaker after a closing impulse (Table 19.1), which a manual mode may not be able to assess so accurately and the machine may be synchronized just before or just after the moment of synchronization.

5 *Auto-synchronization*
In the preceding text we have discussed manual methods of synchronizing two sources, more common for smaller installations, say, up to 500 kVA. For large installations and power generating stations such procedures may not be practical for manual methods may not be so accurate at the instant of synchronization. They are therefore likely to cause a fault condition due to heavy circulating currents, as a result of higher $\Delta\theta$ or Δf than permissible. It may also lead to hunting. They are also time consuming. Moreover, the synchronization may be required at times when the operator is not available. For such installations, an auto-synchronizing scheme must be used. This will compare f_1 and E_1 of the incoming machine with that of the existing source and automatically control its speed (f_1) and excitation voltage (E_1) to the pre-set values, so that Δf, ΔV and $\Delta\theta$ are within the permissible limits at the instant of synchronization. The recommended limits for such parameters, as noted above, may be considered as

$\Delta f^* =$ within 0.15 Hz

$\Delta V =$ within 1% of the rated voltage

$\Delta\theta^* =$ within 7°

(*Both of these give rise to higher residual voltage, E_C, which may lead to hunting).

All this can be achieved with the help of an auto-synchronizing relay, which is capable of monitoring the phase shift, $\Delta\theta$, to perform perfect synchronization even without an operator. A normally open (NO) contact of the relay is wired in the closing circuit of the interrupting device of the incoming machine. The relay sends out an advance signal to account for the closing time of the breaker circuit to close this contact at the instant when Δf, ΔV and $\Delta\theta$ fall within their pre-set limits. Such relays, which may be solid-state (IC circuits) or microprocessor based, are extremely accurate and fast-synchronizing.

Important

Besides the three basic parameters noted above, the incoming machine must also be running a little too fast compared to the existing source, i.e. $f_1 > f_2$ or f_b, at the instant of synchronization. If it is not, it will further stress an already overstressed source. When the incoming machine runs a little too slow it will fall behind the existing source and operate as a synchronous motor, drawing a reactive power from the existing source, rather than feeding to it, and thus stress it further. Such a situation is undesirable as the incoming machine is being switched on the system precisely to relieve the existing source of its overstress by sharing a part of its load. It is therefore mandatory that the incoming machine must be running a little faster than the existing source at the instant of synchronizing. When it is, the incoming machine will immediately share a part of the load equal to I_c (Figure 16.35) to the extent it was too fast. The synchronizing relays are provided with an inbuilt feature to accomplish this requirement. (Also refer to Section 16.9.1(A1) and (C1), Figures 16.16(a) and 16.22.) If

I_c = circulating current (load on the incoming machine)

I_2 or I_b = loading on the existing source then the new loading on the existing source,

$\bar{I}_2' = \bar{I}_2 - \bar{I}_c$ in case of another machine G_2

or $\bar{I}_b' = \bar{I}_b - \bar{I}_c$ in case of an infinite bus

The incoming machine can then be loaded as desired.

The total sequence of auto-synchronizing a standby generating unit with an existing system can thus be summarized as follows:

- On receiving a closing signal, the AMF panel starts the prime mover of DG_1. Through automatic speed and voltage controls, as discussed in Section 16.7, G_1 is brought up to its speed and voltage as desired.
- At this stage, an auto-synchronizing relay (Relay Code 25) is brought into the circuit. This relay is suitable for any size of a generating unit to be synchronized automatically with another unit or an infinite bus. The relay executes three basic functions:

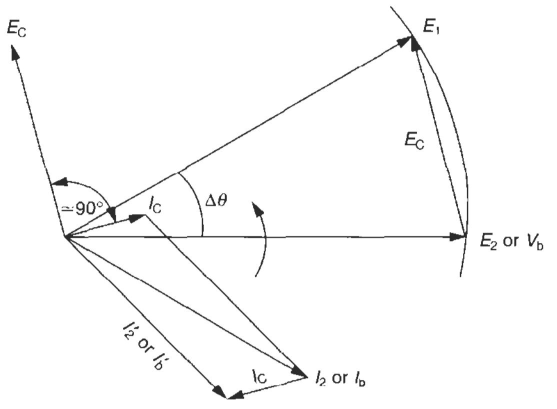

$\bar{I}_2' = \bar{I}_2 - \bar{I}_C$

$\bar{I}_b' = \bar{I}_b - \bar{I}_C$

Figure 16.35 Sharing of load by an incoming machine during synchronizing, when running faster than the existing source

1. **As a frequency (Δf) comparator and frequency balancing or equalizing unit (FNI)** This unit compares the difference in the two frequencies (Δf) and controls it through an in-built frequency balancing relay. The relay sends out a pulse to the motorized governor of PM_1, (Figure 16.36) to raise or lower its speed to attain the pre-set Δf, within 0.15 Hz, depending upon the size of the machine and the flywheel used with the PM_1 The relay can be built into the auto-synchronizing relay or can be a separate unit.
2. **As a voltage (ΔV) comparator and voltage balancing or equalizing unit (UNI)** This unit compares the difference in the two voltages (ΔV) and controls it through an in-built voltage balancing relay. The relay sends out a pulse to the AVR of G_1 through a motorized potentiometer, which can be introduced in the QDC circuit (Figure 16.6) to raise or lower its excitation automatically to attain the pre-set ΔV, generally within 1% of the rated voltage.

   The relay can be built into the auto-synchronizing relay or can be a separate unit.
3. The auto-synchronizing relay monitors ΔV, Δf and phase shift (Δθ), between the two voltage phasors. In other words it monitors the residual voltage, E_c. It also ensures that G_1 is slightly ahead of the existing source at the instant of synchronization.

When these parameters are brought within the pre-set values, the relay transmits a closing impulse to the switching circuit of G_1, a little in advance to account for the closing time of the breaker circuit. The breaker is thus switched at almost the same instant, when all the parameters fall within the pre-set limits. The total closing time may be a few ms (say, 150–300 ms), depending upon the closing time of the breaker and any other coils or relays incorporated into the switching circuit which may add to the closing time. (Also refer to Table 19.1, for the closing time of breakers.)

16.11 Recommended protection for a synchronizing scheme

In addition to the normal protection, as suggested in Section 16.8.2 the following is also recommended:

1. **A reverse power relay (RPR) (Relay Code 32)** This is meant for both active and reactive powers. If the incoming machine is slow, it will operate as a synchronous motor and draw power from the system rather than feed it, not a desirable situation. The relay will isolate the machine before it causes an overloading of the existing source.
2. **Field failure relay (Relay Code 40)** This monitors the exciter field current and detects the loss of field supply or reduction in the field current.
3. **Mains decoupling relay (Relay Code 78)** This protection is applicable when the captive generator is hooked up with the main bus. The relay trips the incoming breaker instantaneously on failure of the main supply. Otherwise on rapid restoration of the

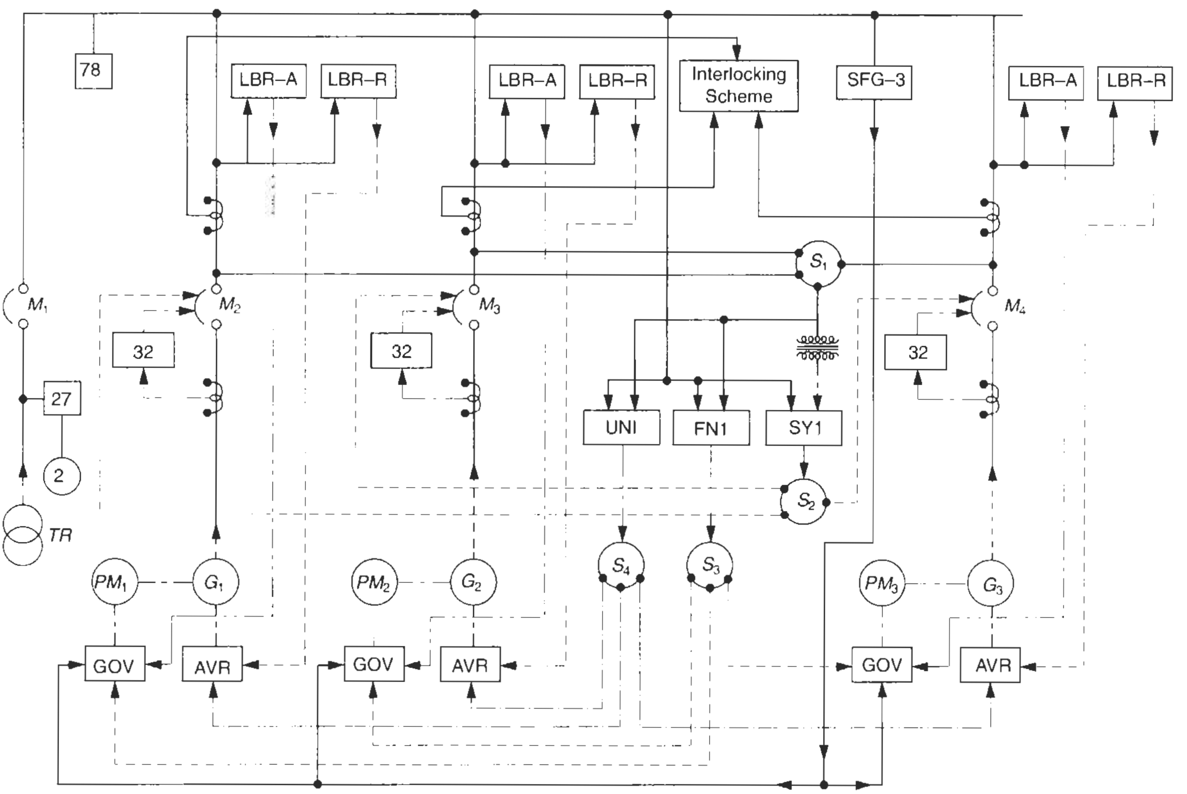

*M*1–*M*4 – Circuit breaker
*G*1–*G*3 – Generator
PM_1–PM_3 – Engine
GOV – Governor
*S*1–*S*4 – Selector Sw.
AVR – Automatic voltage regulator

32 – Reverse power relay
LBR–A – Load balance relay active
LBR–R – Load balance relay reactive
78 – Main decoupling relay
27 – Bus voltage relay

2 – Time delay relay
UNI – Voltage balance relay
FNI – Frequency balance relay
SY1 – Synchronizing relay
SFG-3 – Bus frequency relay

Figure 16.36 Typical block diagram illustrating an auto-synchronizing and load-sharing

main supply, as a result a fast auto-reclosing, the machine may be subject to mechanical damage or a fault condition. A small delay would throw the two sources out of synchronization and voltages up to 180° apart, causing a residual voltage E_c, up to twice the system voltage. In such a situation the relay must operate even faster than the reclosing time, as fast as within 1 cycle (20 ms for a 50 Hz system) and trip the breaker in less than 10 cycles (200 ms) to account for the tripping time of the interrupting circuit and the interrupter.

Notes
1 For schematic diagrams of relays, refer to the manufacturers' catalogues.
2 The numbers given in parentheses denote the relay numbers as in the ANSI standard.

16.12 Load sharing by two or more generators

The variable parameters in a generator that may affect its performance are as follows:

1 **Speed of the prime mover**
For active load sharing,

$$f \propto N \qquad (1.6a)$$

and $P \propto N \cdot T$ (1.2)

The load sharing of the two generators is therefore dependent on the speed–load (drooping) characteristics of the prime movers.

2 **Excitation voltage** For reactive load sharing, $P = \sqrt{3} \cdot E \cdot I \cos \phi$

We will notice during our subsequent discussions that E and $I \cos \phi$ are complementary. Although I and $\cos \phi$ cannot be altered directly, they are both functions of excitation voltage E. A variation in E will vary both I and $\cos\phi$. The reactive or kVAr loading is thus dependent upon the voltage versus reactive load–current characteristics of the generators and can be varied through the QDC. Thus the power generated or the load sharing by a generator can be altered in the following ways;

- **Active power (kW) sharing** By changing the mechanical torque of the prime mover by changing its driving force (fuel supply).
- **Reactive power (kVAr) sharing** By changing its excitation (field current) that will alter the generated e.m.f., E, in both magnitude and phase displacement, f remaining the same. A mismatch in excitation will result in reactive unbalancing, causing a reactive circulating current, which is not desirable. It is controlled through QDC by adjusting the droop even for identical machines.

16.13 Total automation through PLCs

With the availability of PLCs (Programmable Logic Controllers, Section 13.2.3) it has become possible to perform all the above controls and protections automatically. The generating station can even be left unmanned. Such schemes can be adopted for large captive generating stations or where a quicker and more accurate power supply is desirable, such as large process plants (cement, paper, chemicals and refineries) which may have large captive generating units (two and more).

When there are two or more machines it is also possible to program the PLCs to select the machine to perform in a particular sequence so that each machine has almost the same number of hours of operation. This makes it easy to identify the next machine for routine maintenance shutdown. A PLC is fully capable of performing the following;

- To auto-start the machine in the same sequence as discussed in Section 16.7.
- To initiate operation of the next due machine when the power demand on the existing machine or bus exceeds its rating.
- To perform all the duties of an auto-synchronizing relay and monitor and correct ΔV, Δf and $\Delta\theta$.
- To run the incoming machine a little in advance, while switching it on the bus, to enable it share a part of the load immediately from the existing machine or the bus.
- The duty of load sharing between two or more machines is performed similarly.
- When the load demand falls, the machine that has operated for more hours is stopped first.
- Any required sequence or programming is possible.
- The scheme can also be provided with the required
  - Metering
  - Protection
  - Indication
  - Alarm
  - Annunciation etc.
- Even the grounding of the generators can be monitored through this scheme, so that only one machine is grounded at a time, to avoid circulation of fault currents (Section 20.10.1).

Example 16.2

Consider two DG sets operating in parallel and having the following parameters:

	G_1	G_2
Rating	750 kVA	750 kVA
p.f.	0.8 lagging	0.8 lagging
Speed at full load	1500 r.p.m. (50 Hz)	1500 r.p.m. (50 Hz)
Droop	3%	4%

To determine the load sharing between the two, draw the drooping curves as shown in Figure 16.37.

For G_1: FF_1 = no-load speed $= 1.03 \times 1500$

$= 1545$ r.p.m.

and frequency $= 1.03 \times 50$

or 51.5 Hz.

FF_0 = full-load speed

$= 1500$ r.p.m. at a frequency of 50 Hz.

F_0A_2 = full active load

$= 750 \times 0.8$

$= 600$ kW

Similarly for G_2:

FF_2 = no-load speed $= 1.04 \times 1500$

$= 1560$ r.p.m.

and frequency $= 1.04 \times 50$

$= 52$ Hz

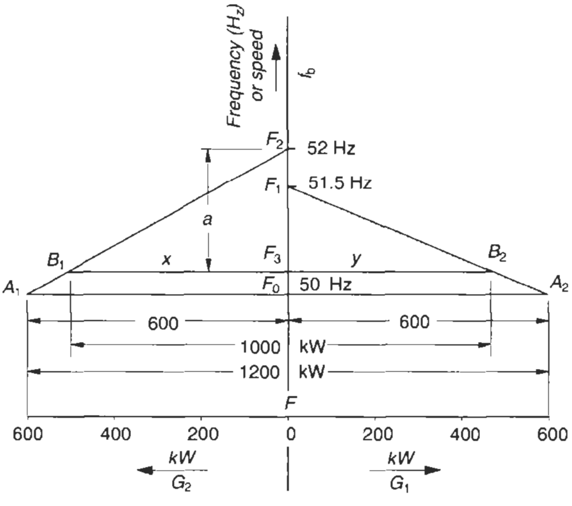

Figure 16.37 Determining the load sharing between G_1 and G_2 with the help of prime-movers drooping characteristics

$$FF_0 = \text{full-load speed} = 1500 \text{ r.p.m.}$$

at a frequency of 50 Hz

$$F_0A_1 = \text{full active load}$$
$$= 750 \times 0.8$$
$$= 600 \text{ kW}$$

Therefore, the generators would share a load of 1200 kW equally. If, however, the total load is reduced to, say, 1000 kW, the loading will differ due to unequal drooping characteristics. The revised load sharing can be determined as follows.

Let B_1B_2 represent the full load of 1000 kW at a frequency FF_3. If B_1F_3 and F_3B_2 are the load sharing by G_2 and G_1 respectively, i.e. $x + y = 1000$ kW, then to determine the required quantities, consider the two triangles

$F_2B_1F_3$ and $F_2A_1F_0$

when

$$\frac{F_2F_3}{F_2F_0} = \frac{B_1F_3}{A_1F_0}$$

$$= \frac{a}{52 - 50} = \frac{x}{600}$$

or $600a = 2x$ (1)

While considering triangles $F_1B_2F_3$ and $F_1A_2F_0$,

$$\frac{F_1F_3}{F_1F_0} = \frac{F_3B_2}{F_0A_2}$$

$$\frac{a - 0.5}{1.5} = \frac{y}{600}$$

$$= \frac{1000 - x}{600}$$

or $(a - 0.5)\ 600 = 1.5\ (1000 - x)$ (2)

From equations (1) and (2)

$$0.5 \times 600 = 2x - 1.5\ (100 - x)$$

or $3.5x = 300 + 1.5 \times 1000$

$\therefore$ $x = 514$ kW (for the generator having 4% droop) and $y = 486$ kW (for the generator having 3% droop)

and $a = \frac{2 \times 514}{600}$

$= 1.7$ Hz

$\therefore$ $FF_3 = 52 - 1.7$

$= 50.3$ Hz.

While sharing a load of 1000 kW they will be unequally loaded as noted above and operate at a bus frequency of 50.3 Hz.

Example 16.3

Consider two *DG* sets operating in parallel and having unequal ratings as noted below:

	G_2	G_1
Rating	1000 kVA	750 kVA
p.f.	0.8 lagging	0.8 lagging
Speed at full load	1500 r.p.m. (50 Hz)	1470 r.p.m. (49 Hz)
Speed at no load	1560 r.p.m. (52 Hz)	1530 r.p.m. (51 Hz)
∴ Droop	4%	2%. It is governed by the full-load speed of the larger machine (1500 r.p.m).
and active load	800 kW	600 kW

(A) To determine the load sharing between the two, draw the drooping curves as shown in Figure 16.38.

FF_1 = no-load speed of G_1 at 51 Hz
FF_2 = full-load speed of G_1 at 49 Hz
F_2B_1 = 600 kW
F_1B_1 = drooping characteristics for G_1

Similarly FF_3 = no-load speed of G_2 at 52 Hz
FF_4 = full-load speed of G_2 at 50 Hz
F_4A_1 = 800 kW
F_3A_1 = drooping characteristics for G_2

Since the full-load speeds of the two engines are different, they will not be running at their respective full-load speeds when running in parallel, but somewhere between the two. It will be seen that the maximum output will occur when G_2 is operating at its full load. Consider triangles $F_1F_4A_2$ and $F_1F_2B_1$. Then

$$\frac{F_1F_4}{F_1F_2} = \frac{F_4A_2}{F_2B_1}$$

or $\frac{1}{2} = \frac{x}{600}$

$\therefore$ $x = 300$ kW

$\therefore$ The maximum load the two machines can share when running in parallel

$= 800 + 300$

$= 1100$ kW as against a capacity of 1400 kW

(B) When considering a load of only 1000 kW the sharing of the two machines will be as follows. Now the machines would run a little faster than before. Say, the operating line is shifted to $B_1'B_2'$, at a frequency of FF_0. Consider triangles $F_3B_1'F_0$ and $F_3A_1F_4$ when

$$\frac{F_3F_0}{B_1'F_0} = \frac{F_3F_4}{A_1F_4}$$

i.e. $\frac{a}{y} = \frac{2}{800}$

or $800a = 2y$ (1)

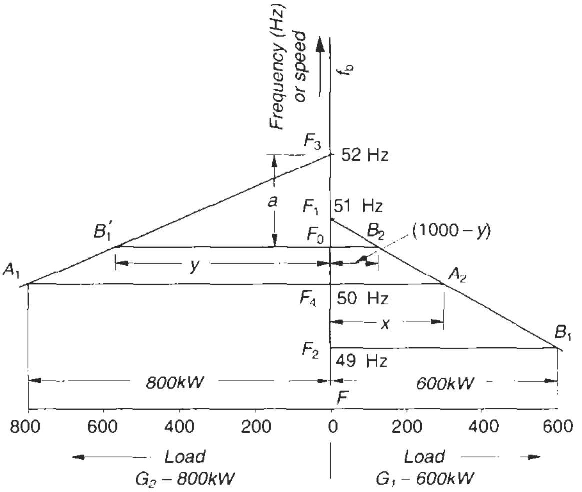

Figure 16.38 Determining the load sharing

Similarly, consider triangles $F_1F_0B_2$ and $F_1F_2B_1$ when

$$\frac{F_1F_0}{F_1F_2} = \frac{F_0B_2}{F_2B_1}$$

$$\text{or} \quad \frac{a-1}{2} = \frac{1000-y}{600}$$

$$\text{or } (a-1)\,600 = 2 \times 1000 - 2y \qquad (2)$$

From equations (1) and (2)

$$1400a - 600 = 2 \times 1000$$

$$\therefore \quad a = \frac{2600}{1400}$$

$$= 1.86 \text{ Hz}$$

$$\text{and frequency of operation} = 52 - 1.86$$

$$= 50.14 \text{ Hz}$$

$$\text{and} \quad Y = \frac{800 \times 1.86}{2}$$

$$= 744 \text{ kW}$$

$$\text{and} \quad F_0B_2 = 256 \text{ kW}$$

Conclusion

1. A slight variation in the drooping characteristics causes a variation in the load sharing.
2. A machine that has a higher droop (G_2 in the above case) will share a larger load than the one that has a lower droop.
3. The higher the droop, the higher will be the load variation.
4. When there is a difference in the full-load speeds the load sharing during a parallel operation will not be equal and the generators will operate underutilized.

Hence the significance of employing identical machines, when required to run in parallel to achieve the optimum utilization of their capacities.

To determine the fault level of the system when two or more machines are operating in parallel refer to Section 13.4.1(5).

Relevant Standards

IEC	*Title*	*IS*	*BS*
60034-1/1996	Rotating electrical machines Rating and performance	4722/1992, 325/1996	BS EN 60034-1/1995
60034-3/1988	Rotating electrical machines Specific requirements for turbine type synchronous machines	—	BS EN 60034-3/1996
—	Specification for voltage regulation and parallel operation of a.c. synchronous generators	—	BS 4999-140/1987

Relevant US Standards ANSI/NEMA and IEEE

ANSI/IEEE 446/1995	Recommended practice for emergency and standby power systems for industrial and commercial applications. (IEEE Orange Book)
ANSI/IEEE C37.101/1993	Guide for generator ground protection
ANSI C50.10/1990	Synchronous machines
ANSI/IEEE 115-1/1995	Test procedures for synchronous machines, acceptance and performance testing
NEMA/MG-1/1993	Motor and generators ratings, construction, testing and performance
NEMA/MG-2/1989	Safety standards (enclosures) for construction and guide for selection, installation and use of rotating machines

Notes

1. In the tables of relevant Standards in this book while the latest editions of the standards are provided, it is possible that revised editions have become available. With the advances of technology and/or its application, the updating of standards is a continuous process by different standards organizations. It is therefore advisable that for more authentic references, readers should consult the relevant organizations for the latest version of a standard.
2. Some of the BS or IS standards mentioned against IEC may not be identical.
3. The year noted against each standard may also refer to the year of its last amendment and not necessarily the year of publication.

Appendix 1: Selection of power cables

A16.1 Introduction

To provide a reference for those working on power projects or at sites, we provide some important data on different types of LT and HT power cables in this appendix. The cables described here are in use for all kinds of power distribution applications. Of these, XLPE cables are also used for power transmission applications. To help a user to select the most appropriate types of cables, we also provide a brief comparative chart of the various types of cables being manufactured. Tables giving the technical particulars of such cables in all voltage ratings have also been provided.

The selection process of power cables is almost the same as that of a bus system discussed in Section 28.3. For simplicity we consider only the basic data for selection which would suffice the majority of applications. For accurate calculations a similar approach will be essential as for the bus systems (Chapter 28). For site conditions and laying arrangements which may influence the basic rating of a cable, corresponding derating factors have also been provided. The information covered here will be useful to users to meet their cable requirements, although the data may vary marginally for different manufacturers. For more data on cables, not covered here, reference may be made to the cable manufacturers.

The choice of any of the cables mentioned in Table A16.1 will depend upon the site conditions, fault level and the voltage rating of the system. A brief comparison of all these insulating systems is given in Table A16.2

Table A16.1 Insulating systems for cables

Sr. no.	*Insulating system*	*Constituents*
1	Polyvinyl chloride (PVC)	A thermoplastic compound
2	Paper insulated (PI) (Figure A16.1)	Impregnated paper
3	Unfilled or filled crosslinked polyethylene (XLPE) insulated (Figure A16.2)	A thermoplastic compound
4	Polyethylene (PE)	A thermoplastic compound. These are basically polyethylene compounds only, with a little crosslinking to save on cost. LT cables and those below 6.6 kV are costly to produce and hence not in great use
5	Ethylene propylene (EP) rubber	A synthetic rubber (butyl rubber)
6	Flame retardant low smoke cables (FRLS)	The outer sheathing of such cables is made with the base insulation of chlorinated polymers (e.g. PVC, polythene, CSP, PCP, XLPE or EP rubber) and hence they can be manufactured for all system voltages. All polymers are self-extinguishing and fire retardant. But in the event of fire, they propagate fine and release large volumes of dense smoke, toxic gases and HCl. When combined with water, such as during firefighting, they produce corrosive acids which are highly dangerous for human inhalation. A good FRLS cable must therefore possess the following properties: – Ability to restrict the propagation of flame – Emit low smoke. – The smoke emitted should not obscure visibility – Emit low acid (HCl) gas – Emit low toxic gases To make these polymers have the desired properties, certain additives (chemicals), as noted below, are added to the sheathing compound in specific ratios. The additives act like flame retardants and diminish the ignitability of the insulation by lowering the temperature of the cable, delaying ignition and resisting the spread of fire in the insulation and the polymeric compounds – Alumina trihydrate – to achieve reduction of heat by cooling through an endothermic process that decomposes the flame – Molybdenum trihydrate – reduces smoke – Antimony trioxide – also provides a flame retardant effect – Zinc borate–forms a protective coating of a glass-like film, retards the burning process and protects the insulation – Calcium carbonate – emits non-flammable gases and helps to reduce the supply of oxygen to the burning surfaces. The FRLS cables thus produced would possess the required properties
7	Fire survival cables (FS)	These are silicon rubber, glass tape or glass mica tape sheathed, with an elastomer, having fire retardant and low smoke properties

Table A16.2 Comparative study of different insulating systems

Sr. no.	*Particulars*	*PVC*	*Paper insulated*	*XLPE insulated PVC sheated*	*PE*	*EP rubber*
1	Loss factor, tan δ at 50 Hz and 20°C	0.07	Low, 0.003	Very low, 0.0005	Very low, 0.0005	Low, 0.003
2	Dielectric constant at 50 Hz and 20°C	5.8	3.5	2.3	2.3	3.0
3	A.C. dielectric strength (kV/mm)	18	40	40	30	30
4	Volume resistivity at 20°C (Ω-cm)	10^{12}–10^{15}	10^{15}	10^{17}	10^{17}	10^{15}
5	Specific gravity (g/cm^3)	Very heavy, 1.35–1.46	Heavy, 1.1	Very light, 0.93	Very light, 0.93	Very heavy, 1.35
6	Thermal resistivity, °C (cm/W)	650	550	350	350	500
7	Flexibility at 10°C	Poor	Poor	Good	Good	Excellent
8	Abrasion resistance	Good	Poor	Good	Good	Poor
9	Deformation resistance at 150°C	Poor	Good	Good	Poor	Excellent
10	Fire resistance	Excellent. Low smoke and low halogen emission under fire conditions	Poor	Poor	Poor	Poor
11	Ageing resistance at 100°C 120°C 150°C	 Moderate Poor Poorer	 Good Moderate Poor	 Excellent Good Moderate	 Moderate Poor Poorer	 Good Moderate Poor
12	Oil resistance at 70°C	Good	Poor	Good	Good	Poor
13	Resistance to chemicals	Good	Moderate	Excellent	Good	Moderate
14	Hydroscopic properties	Non-hygroscopic	Hygroscopic	Non-hygroscopic	Non-hygroscopic	Hygroscopic
15	Voltage range	LT and HT up to 11 kV	1.1 kV to 33 kV (No LT due to cost)	6.6 kV to 440 kV and higher	Below 6.6 kV. But not in use due to cost	LT and HT up to 11 kV
16	Thermal rating (i) For continuous operation °C (ii) For short time overload °C (iii) For short-circuit conditions °C	 70 130 160	 65 85 160	 90 130 250 *Utilization:* (1) Higher operating temperature permits a greater utilization of metal and allows a higher current rating compared to PVC and paper insulated cables. (2) A higher operating temperature will necessitate checking of the surroundings at the point of installation for any fire hazards or adverse thermal effects on the equipment, devices, and components installed in the vicinity. When desired, the cable may have to be derated to operate at lower temperatures	 70 90 150	 85–90 120–130 220–250 Different rubber compounds can operate at different temperatures. Special compounds are available such as silicon rubber that can provide yet higher temperatures, say, up to 150°C operating and 350°C during short-circuits. *Utilization:* As for XLPE cables
17	Condition on fault	Emits corrosive gases and causes leakage of oil. Not environment friendly		Emits CO$_2$ and water. Does not melt. Environment friendly.		As for PVC
18	Applicable standards	IEC 60227	IEC 60055-1 and 2	IEC 60502-2 up to 33 kV IEC 60840 above 30 kV up to 150 kV SS-424 24 17 – Swedish specification– 12-420 kV	IEC-60502-1	BS 6708 IS 9968 Part I Elastomer insulated cables – up to 1100 V Part II 3.3–11 kV

(Contd)

Table A16.2 *(Contd)*

Sr. no.	*Particulars insulated*	*PVC*	*Paper*	*XLPE insulated PVC sheated*	*PE*	*EP rubber*
19	Qualities and recommendations for use	The most undisputed cable for all LT applications and up to 11 kV in HT	In common use up to 11 kV but no inhibition up to 33 kV	1 Light weight, easy to lay and bend 2 Fire retardant, has low smoke and low halogen emission under fire conditions 3 Strong resistance to deformation at high temperatures 4 High thermal stability 5 Until a few years ago paper insulated cables had a dominant position but not so with the advent of XLPE cables (a development of the 1960s), in view of their higher thermal rating and availability in all voltage ranges up to 400 kV and above. This situation is almost similar to SF_6 technology over vacuum (Chapter 19). While vacuum is preferred it has limitations in HT above 33 kV as have paper insulated cables, which are available up to 33 kV and have limitations beyond this. Hence the use of XLPE cables for HV and EHV installations	Due cost, not much in use	1 Elastomeric cables or silicon elastomer 2 Resistant to oil, fire and heat 3 They are copper conductor cables to save from breakages 4 Being highly flexible, are ideal for material handling applications such as cranes, hoists, lifts and all installations mounted on moving platforms. Used as a trailing cable for reeling and unreeling operations
20	Likely applications	– Power distribution and control wiring – Utilities, lifts, elevators – Underground railway transport – Mining – Submersible pumps – Paper, mining – Chemicals and fertilizers – All locations that are not fire hazardous		– Power plants for bulk transfer of energy for transmission and distribution of power – Chemicals and fertilizers – Underground metro – Mining – High fire risk zones – All possible applications		Material handling: – Reeling–unreeling operations such as – Hoists – Conveyors – Lifts – Dumpers – Trailing cables – Portable drills – Earth-moving machinery – Offshore platform feeder cables – Ship wiring – Transportation – Railways – Ovens – Furnaces – Steel rolling mills

Notes

1 **Flame retardant low smoke (FRLS) cables**

Where greater safety for equipment and personnel against a likely occurrence of fire is a pre-requisite FRLS coating is used on practically all types of cables described above, as in IEEE 383, IEC 60332 1 and IEC 60754-1. This coating will restrict the spread of fire and produce a low smoke.

Applications

- Hazardous locations
- High-rise buildings
- Hospitals
- Theatres
- Hotels
- Schools
- Power stations
- Offices, banks
- Public places, for safety to life and property
- Offshore platforms etc.

2 **Fire survival cables (FS)**

These are heat- and flameproof cables suitable for high fire risk zones. In severe fire conditions, when the outer protection and insulation have been destroyed, these cables would still maintain continuity of essential services.

- Emit very low smoke.
- For installations prone to ignition and fire, these cables can sustain fire for three hours as in IEC 60331, to minimize the extent of fire and consequent damage.
- This, however, is possible only in special EP rubber compounds as noted above.

Applications

- Firefighting systems
- Pumping
- Safety alarms
- Emergency lighting
- Offshore platforms
- All places of high fire risks

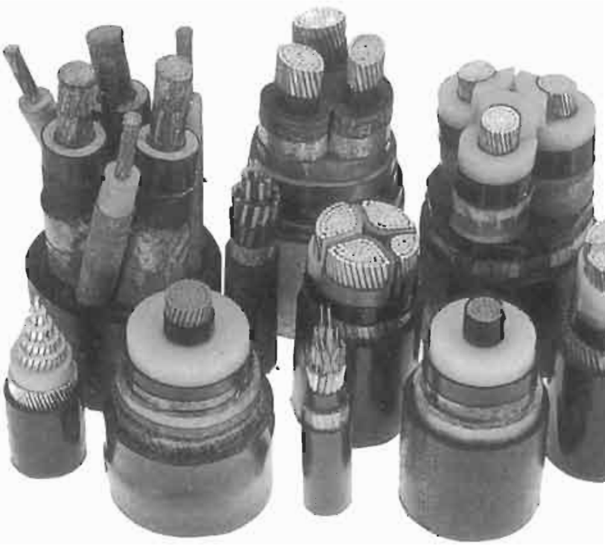

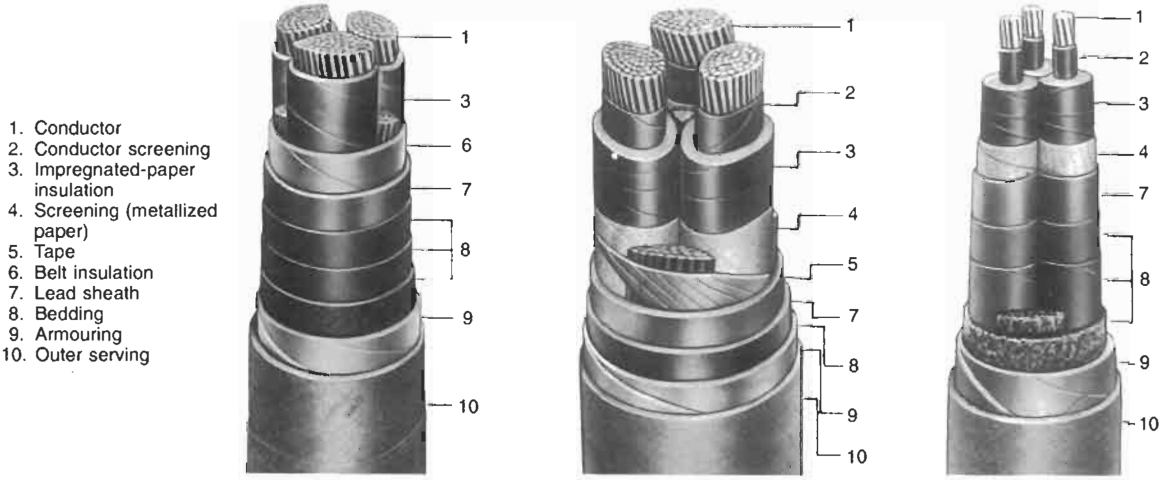

Belted construction in which insulation in the form of common belt, in addition to core insulation, is employed

Screen construction (H type) in which each core has its own insulation and screen

Screened SL construction (HSL type) which, in addition to possessing its own insulation and screen also has a separate lead sheath for each core as against a common lead sheath in the other two types

Figure A16.1 Different constructions of paper-insulated cables

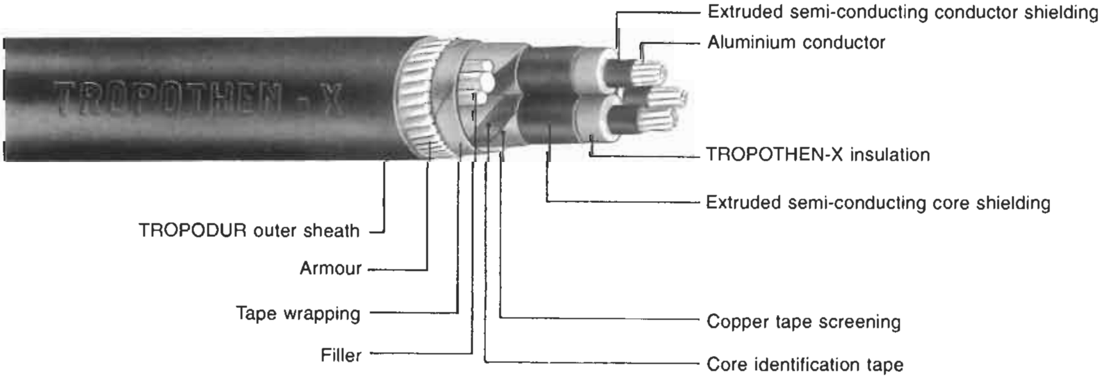

Figure A16.2 Three-core XLPE cable (Courtesy: CCI)

Table A16.3 *(Contd)*

Type	*No. of cores and cross-sectional area*		*Conductor (Al) minimum no. of wires*	*Thickness of PVC insulation (nom.)*	*Thickness of common covering minimum extruded*	*Armouring*		*Thickness of PVC outer sheath (min.)*	*Approx. o.d.*	*Approx. net wt of cable*	*Max. d.c. resistance at 20°C*	*Approx. a.c. resistance at operating temp. 70°C*	*Approx. reactance at 50 Hz*	*Approx. capacitance per phase*	*Current rating*			*Short-circuit rating for 1 second*	*Normal delivery*		
						Flat wire size	*Round wire*								*Direct in ground*	*In duct*	*In air*		*Length*	*Drum size*	*Approx. gross weight*
	No. × mm²		*No.*	*mm*	*mm*	*mm*	*Dia. mm*	*mm*	*mm*	*kg/km*	*Ω/km*	*Ω/km*	*Ω/km*	*μF/km*	*Amps*	*Amps*	*Amps*	*kA (r.m.s.)*	*m*		*kg*
AYFY	$3^{1}/_{2}\times 25/16$	sm/rm	6	1.2/1.0	0.3	4.0×0.8		1.40	26.0	930	1.20	1.44	0.094	0.620	76	63	70	1.90	500	A1206	600
	$3^{1}/_{2}\times 35/16$	sm/rm	6	1.2/1.0	0.3	4.0×0.8		1.40	27.0	1060	0.868	1.04	0.093	0.660	92	77	86	2.66	500	A1004	610
	$3^{1}/_{2}\times 50/25$	sm	6	1.4/1.2	0.3	4.0×0.8		1.56	31.0	1340	0.641	0.770	0.093	0.700	110	95	105	3.80	500	A1206	810
	$3^{1}/_{2}\times 70/35$	sm	12	1.4/1.2	0.4	4.0×0.8		1.56	34.0	1690	0.443	0.532	0.090	0.730	135	115	130	5.32	500	A1407	1040
	$3^{1}/_{2}\times 95/50$	sm	15	1.6/1.4	0.4	4.0×0.8		1.56	39.0	2150	0.320	0.384	0.090	0.760	165	140	155	7.22	500	A1506	1360
	$3^{1}/_{2}\times 120/70$	sm	15	1.6/1.4	0.5	4.0×0.8		1.72	42.0	2570	0.253	0.305	0.088	0.780	185	155	180	9.12	500	A1608	1620
	$3^{1}/_{2}\times 150/70$	sm	15	1.8/1.4	0.5	4.0×0.8		1.88	47.0	3000	0.206	0.249	0.088	0.795	210	175	205	11.4	500	A1608	1830
	$3^{1}/_{2}\times 185/95$	sm	30	2.0/1.6	0.5	4.0×0.8		2.04	52.0	3700	0.164	0.199	0.088	0.810	235	200	240	14.1	500	B1809	2290
	$3^{1}/_{2}\times 240/120$	sm	30	2.2/1.6	0.6	4.0×0.8		2.20	58.0	4660	0.125	0.152	0.085	0.820	275	235	280	18.2	500	B2010	2860
	$3^{1}/_{2}\times 300/150$	sm	30	2.4/1.8	0.6	4.0×0.8		2.36	65.0	5630	0.100	0.123	0.085	0.825	305	260	315	22.8	500	B2212	3520
	$3^{1}/_{2}\times 400/185$	sm	53	2.6/2.0	0.7	4.0×0.8		2.68	72.0	6990	0.0778	0.0975	0.085	0.830	335	290	375	30.4	450	B2414	4010
	$3^{1}/_{2}\times 500/240$	sm	53	3.0/2.2	0.7	4.0×0.8		2.84	82.0	8710	0.0605	0.0767	0.085	1.100	355	315	405	38.0	350	B2414	4780
AYFY	4×25	sm	6	1.2	0.3	4.0×0.8		1.40	26.0	970	1.20	1.44	0.097	0.620	76	63	70	1.90	500	A1206	620
	4×35	sm	6	1.2	0.3	4.0×0.8		1.40	28.5	1170	0.868	1.04	0.094	0.660	92	77	86	2.66	500	A1004	670
	4×50	sm	6	1.4	0.4	4.0×0.8		1.56	33.0	1510	0.641	0.770	0.093	0.700	110	95	105	3.80	500	A1407	950

Type designation

A	Aluminium conductor – when it is the first letter of type designation. When type designation does not have an 'A' prefix then cable is with copper conductors.
Y	When it is at first or second place in type designation it stands for PVC insulation.
CE	Individual core screening.
W	Round steel wire armouring.
F	Flat steel wire (strip) armouring.
Gb	Steel tape counter-helix.
Y	When last in type designation, it stands for PVC outer sheath.
WW	Steel double-round wire armour.
FF	Steel double-strip armour.

Conductor types

re	Circular, solid conductor.
rm	Circular, stranded conductor (non-compacted).
rm/v	Circular, stranded compacted conductor.
sm	Sector shaped, stranded conductor.

Courtesy: *CCI*

(I) PVC cables/aluminium conductor

Table A16.3 LT cables: Armoured twin and multicore power cables 650/1100 V

Type	*No. of cores and cross-sectional area*		*Conductor (Al) minimum no. of wires*	*Thickness of PVC insulation (nom.)*	*Thickness of common covering minimum extruded*	*Armouring*		*Thickness of PVC outer sheath (min.)*	*Approx. o.d.*	*Approx. net wt of cable*	*Max. d.c. resistance at 20°C*	*Approx. a.c. resistance at operating temp. 70°C*	*Approx. reactance at 50 Hz*	*Approx. capacitance per phase*	*Current rating*			*Short-circuit rating for 1 second*	*Normal delivery*		*Approx. gross weight*
						Flat wire Size	*Round wire*								*Direct in ground*	*In duct*	*In air*		*Length*	*Drum size*	
	No. × mm²		*No.*	*mm*	*mm*	*mm*	*Dia. mm*	*mm*	*mm*	*kg/km*	*Ω/km*	*Ω/km*	*Ω/km*	*µF/km*	*Amps*	*Amps*	*Amps*	*kA (r.m.s.)*	*m*		*kg*
AYWY	2×1.5	re	1	0.8	0.3		1.4	1.24	15.0	400	18.1	21.7	0.239	0.165	18	16	16	0.114	1000	A1004	485
	2×2.5	re	1	0.9	0.3		1.4	1.24	16.0	460	12.1	14.5	0.229	0.180	25	21	21	0.190	1000	A1004	540
	2×4	re	1	1.0	0.3		1.4	1.24	17.5	530	7.41	8.90	0.223	0.200	32	27	27	0.304	1000	A1004	610
	2×6	re	1	1.0	0.3		1.4	1.24	18.5	610	4.61	5.54	0.207	0.220	40	34	35	0.456	1000	A1004	690
	2×10	re	1	1.0	0.3		1.4	1.24	20.0	710	3.08	3.70	0.198	0.250	55	45	47	0.760	500	A1004	440
	3×1.5	re	1	0.8	0.3		1.4	1.24	15.5	430	18.1	21.7	0.119	0.330	16	14	13	0.114	1000	A1004	510
	3×2.5	re	1	0.9	0.3		1.4	1.24	17.0	490	12.1	14.5	0.115	0.355	21	18	18	0.190	1000	A1004	570
	3×4	re	1	1.0	0.3		1.4	1.24	18.0	580	7.41	8.90	0.112	0.395	28	23	23	0.304	1000	A1004	660
	3×6	re	1	1.0	0.3		1.4	1.24	19.5	670	4.61	5.54	0.104	0.435	35	30	30	0.456	1000	A1004	750
	3×10	re	1	1.0	0.3		1.4	1.24	21.5	800	3.08	3.70	0.099	0.495	46	39	40	0.760	500	A1004	485
	4×1.5	re	1	0.8	0.3		1.4	1.24	16.0	460	18.1	21.7	0.127	0.330	16	14	13	0.114	1000	A1004	540
	4×2.5	re	1	0.9	0.3		1.4	1.24	17.5	540	12.1	14.5	0.123	0.355	21	18	18	0.190	1000	A1004	620
	4×4	re	1	1.0	0.3		1.4	1.24	19.0	640	7.41	8.90	0.119	0.395	28	23	23	0.304	1000	A1004	720
	4×6	re	1	1.0	0.3		1.4	1.24	20.5	740	4.61	5.54	0.112	0.435	35	30	30	0.456	1000	A1206	880
AYFY	2×16	rm	7	1.0	0.3	4.0×0.8		1.40	22.5	790	1.91	2.30	0.179	0.280	70	58	59	1.22	500	A1004	480
	2×25	rm/v	6	1.2	0.3	4.0×0.8		1.40	25.5	990	1.20	1.44	0.176	0.310	90	76	78	1.90	500	A1004	580
	2×35	rm/v	6	1.2	0.3	4.0×0.8		1.40	27.5	1160	0.868	1.04	0.173	0.330	110	92	99	2.66	500	A1004	660
	2×50	rm/v	6	1.4	0.3	4.0×0.8		1.40	31.0	1460	0.641	0.770	0.173	0.350	135	115	125	3.80	500	A1206	870
	3×16	rm	7	1.0	0.3	4.0×0.8		1.40	23.5	870	1.91	2.30	0.090	0.560	60	50	51	1.22	500	A1004	520
	4×10	re	1	1.0	0.3	4.0×0.8		1.40	21.5	730	3.08	3.70	0.107	0.495	46	39	40	0.760	500	A1004	450
	4×16	rm	7	1.0	0.3	4.0×0.8		1.40	25.5	990	1.91	2.30	0.097	0.560	60	50	51	1.22	500	A1004	580
AYFY	3×25	sm	6	1.2	0.3	4.0×0.8		1.40	23.5	820	1.20	1.44	0.088	0.620	76	63	70	1.90	500	A1004	495
	3×35	sm	6	1.2	0.3	4.0×0.8		1.40	25.5	960	0.868	1.04	0.086	0.660	92	77	86	2.66	500	A1004	560
	3×50	sm	6	1.4	0.3	4.0×0.8		1.56	29.5	1210	0.641	0.770	0.086	0.700	110	95	105	3.80	500	A1206	750
	3×70	sm	12	1.4	0.4	4.0×0.8		1.56	33.0	1500	0.443	0.532	0.083	0.730	135	115	130	5.32	500	A1407	940
	3 ×95	sm	15	1.6	0.4	4.0×0.8		1.56	37.0	1900	0.320	0.385	0.083	0.760	165	140	155	7.22	500	A1407	1140
	3×120	sm	15	1.6	0.4	4.0×0.8		1.72	39.0	2230	0.253	0.305	0.082	0.780	185	155	180	9.12	500	A1608	1450
	3×150	sm	15	1.8	0.5	4.0×0.8		1.88	43.0	2650	0.206	0.249	0.082	0.795	210	175	205	11.4	500	A1608	1660
	3×185	sm	30	2.0	0.5	4.0×0.8		1.88	47.0	3180	0.164	0.199	0.082	0.810	235	200	240	14.1	500	B1809	2020
	3×240	sm	30	2.2	0.6	4.0×0.8		2.20	54.0	4070	0.125	0.152	0.079	0.820	275	235	280	18.2	500	B2010	2560
	3×300	sm	30	2.4	0.6	4.0×0.8		2.36	60.0	4900	0.100	0.123	0.079	0.825	305	260	315	22.8	500	B2212	3150
	3×400	sm	53	2.6	0.7	4.0×0.8		2.52	66.0	6070	0.0778	0.0975	0.079	0.830	335	290	375	30.4	500	B2212G	3740
	3×500	sm	53	3.0	0.7	4.0×0.8		2.84	76.0	7620	0.0605	0.0767	0.079	1.100	355	315	405	38.0	450	B2414	4290

Table A16.4 Copper cables 650/1100 V

Conductor cross-section	*Max. d.c. resistance at 20°C*	*Approx. a.c. resistance at operating temp. (70°C)*	*Current rating for one-core*[a]			*Current rating for two core*[a]			*Current rating for 3-, 3.5-, 4-core*[a]			*Short-circuit rating for 1 second*
mm²	*Ω/km*	*Ω/km*	*In ground Amp*	*In duct Amp*	*In air Amp*	*In ground Amp*	*In duct Amp*	*In air Amp*	*In ground Amp*	*In duct Amp*	*In air Amp*	*kA(r.m.s.)*
1.5	12.1	14.5	22	21	20	23	20	20	21	17	17	0.173
2.5	7.41	8.87	30	29	27	32	27	27	27	24	24	0.288
4	4.61	5.52	39	38	35	41	35	35	36	30	30	0.460
6	3.08	3.69	49	48	44	50	44	45	45	38	39	0.690
10	1.83	2.19	65	64	60	70	58	60	60	50	52	1.15
16	1.15	1.38	85	83	82	90	75	78	77	64	66	1.84
25	0.727	0.870	110	110	110	115	97	105	99	81	90	2.88
35	0.524	0.627	130	125	130	140	120	125	120	99	110	4.03
50	0.387	0.463	155	150	165	165	145	155	145	125	135	5.75
70	0.268	0.321	190	175	205				175	150	165	8.05
95	0.193	0.231	220	200	245				210	175	200	10.9
120	0.153	0.184	250	220	280				240	195	230	13.8
150	0.124	0.149	280	245	320				270	225	265	17.3
185	0.0991	0.120	305	260	370				300	255	305	21.3
240	0.0754	0.0912	345	285	425				345	295	355	27.6
300	0.0601	0.0739	375	310	475				385	335	400	34.5
400	0.0470	0.0592	400	335	550				425	360	455	46.0
500	0.0366	0.0468	425	355	590				440	390	500	57.5
630	0.0283	0.0379	470	375	660							72.5
800	0.0221	0.0314	530	405	725							92.0
1000	0.0176	0.0271	590	435	870							115.0

[a] Three single-core cables laid in trefoil formation

Courtesy: CCI

Table A16.5 HT Cables up to 11 kV: Armoured three-core power cables 1.9/3.3 kV[a]

No. of cores and cross-sectional area	*Conductor (Al) minimum no. of wires*	*Thickness of PVC insulation (nom.)*	*Thickness of common covering minimum wrapped*	*Armouring flat wire size*	*Thickness of PVC outer sheath (min.)*	*Approx. o.d.*	*Approx. net wt. of cable*	*Max. d.c. resistance at 20°C*	*Approx. a.c. resistance at operating temp. 70°C*	*Approx. reactance at 50 Hz*	*Approx. capacitance per phase*	*Current rating*			*Short-circuit rating for 1 second*	*Normal delivery*		
												Direct in ground	*In duct*	*In air*		*Length*	*Drum size*	*Approx. gross weight*
No. × mm²		*mm*	*mm*	*mm*	*mm*	*mm*	*kg/km*	*Ω/km*	*Ω/km*	*Ω/km*	*µF/km*	*Amps*	*Amps*	*Amps*	*kA (r.m.s.)*	*m*		*kg*
3 ×25 sm	6	2.3	0.3	4.0 × 0.8	1.40	28.5	1060	1.20	1.44	0.104	0.445	74	61	70	1.90	500	A 1206	670
3 ×35 sm	6	2.3	0.3	4.0 ×0.8	1.56	31.0	1260	0.868	1.04	0.100	0.500	89	75	86	2.66	500	A 1206	770
3 × 50 sm	6	2.3	0.4	4.0 ×0.8	1.56	34.0	1470	0.641	0.770	0.096	0.555	105	92	105	3.80	500	A 1407	930
3 × 70 sm	12	2.3	0.4	4.0× 0.8	1.56	37.0	1760	0.443	0.532	0.091	0.630	130	110	130	5.32	500	A 1407	1070
3 ×95 sm	15	2.3	0.4	4.0 ×0.8	1.72	40.0	2140	0.320	0.385	0.088	0.715	160	135	155	7.22	500	A 1506	1360
3 ×120 sm	15	2.3	0.5	4.0 ×0.8	1.72	43.0	2460	0.253	0.305	0.086	0.785	180	150	180	9.12	500	A 1608	1560
3 ×150 sm	15	2.3	0.5	4.0 ×0.8	1.88	45.0	2810	0.206	0.249	0.084	0.990	205	170	205	11.4	500	A 1608	1740
3 ×185 sm	30	2.3	0.5	4.0 ×0.8	2.04	49.0	3300	0.164	0.199	0.083	1.080	230	195	240	14.1	500	B 1809	2090
3 ×240 sm	30	2.3	0.6	4.0 ×0.8	2.20	54.0	4050	0.125	0.152	0.081	1.210	265	230	280	18.2	500	B 2010	2550
3 ×300 sm	30	2.5	0.6	4.0 ×0.8	2.36	60.0	4890	0.100	0.123	0.080	1.230	295	250	315	22.8	500	B 2212	3150
3 ×400 sm	53	2.7	0.7	4.0 ×0.8	2.52	67.0	6030	0.0778	0.0975	0.080	1.275	325	280	375	30.4	500	B 2212G	3720
3 ×500 sm	53	3.0	0.7	4.0 ×0.8	2.84	76.0	7510	0.0605	0.0767	0.080	1.290	345	305	405	38.0	450	B 2414	4240

[a] These cable can be used on 3.3 kV grounded or ungrounded systems

Courtesy: CCI

Table A16.6 Armoured three-core power cable 3.8/6.6 kV (grounded system)

No. of cores and cross-sectional area	*Conductor (Al) minimum no. of wires*	*Thickness of PVC insulation (nom.)*	*Thickness of common covering minimum wrapped*	*Armouring flat wire size*	*Thickness of PVC outer sheath (min.)*	*Approx. o.d.*	*Approx. net wt. of cable*	*Max. d.c. resistance at 20°C*	*Approx. a.c. resistance at operating temp. 70°C*	*Approx. reactance at 50 Hz*	*Approx. capacitance per phase*	*Current rating*			*Short-circuit rating for 1 second*	*Normal delivery*		
												Direct in ground	*In duct*	*In air*		*Length*	*Drum size*	*Approx. gross weight*
No. × mm²		*mm*	*mm*	*(mm)*	*mm*	*mm*	*kg/km*	*Ω/km*	*Ω/km*	*Ω/km*	*µF/km*	*Amps*	*Amps*	*Amps*	*kA (r.m.s.)*	*m*		*kg*
3x25 sm	6	3.6	0.4	4.0x0.8	1.56	35	1530	1.20	1.44	0.119	0.340	74	61	70	1.90	500	A 1407	960
3x35 sm	6	3.6	0.4	4.0x0.8	1.56	38	1740	0.868	1.04	0.113	0.375	89	75	86	2.66	500	A 1506	1160
3x50 sm	6	3.6	0.4	4.0x0.8	1.72	41	2030	0.641	0.770	0.108	0.415	105	92	105	3.80	500	A 1506	1300
3x70 sm	12	3.6	0.5	4.0x0.8	1.72	44	2370	0.443	0.532	0.103	0.470	130	110	130	5.32	500	A 1608	1520
3x95 sm	15	3.6	0.5	4.0x0.8	1.88	47	2760	0.320	0.385	0.098	0.520	160	135	155	7.22	500	A 1608	1710
3x120 sm	15	3.6	0.5	4.0x0.8	1.88	49	3050	0.253	0.305	0.095	0.565	180	150	180	9.12	500	B 1809	1960
3x150 sm	15	3.6	0.6	4.0x0.8	2.04	52	3450	0.206	0.249	0.093	0.720	205	170	205	11.4	500	B 1809	2160
3x185 sm	30	3.6	0.6	4.0x0.8	2.20	56	4010	0.164	0.199	0.090	0.775	230	195	240	14.1	500	B 2010	2530
3x240 sm	30	3.6	0.6	4.0x0.8	2.36	61	4800	0.125	0.152	0.088	0.860	265	230	280	18.2	500	B 2212	3100
3x300 sm	30	3.6	0.7	4.0x0.8	2.52	66	5630	0.100	0.123	0.086	0.940	295	250	315	22.8	500	B 2212G	3520
3x400 sm	53	3.6	0.7	4.0x0.8	2.68	72	6690	0.0778	0.0975	0.084	1.030	325	280	375	30.4	450	B 2414	3870
3x500 sm	53	3.6	0.7	4.0x0.8	2.84	79	8020	0.0605	0.0767	0.082	1.125	345	305	405	38.0	450	B 2414	4470

Courtesy: CCI

Table A16.7 Armoured three-core power cables 6.35/11 kV (grounded system)[a]

No. of cores and cross-sectional area	Conductor (Al) minimum no. of wires	Thickness of PVC insulation (nom.)	Thickness of common covering minimum wrapped	Armouring flat wire size	Thickness of PVC outer sheath (min.)	Approx. o.d.	Approx. net wt. of cable	Max. d.c. resistance at 20°C	Approx. a.c. resistance at operating temp. 70°C	Approx. reactance at 50 Hz	Approx. capacitance per phase	Current rating			Short-circuit rating for 1 second	Normal delivery		
												Direct in ground	In duct	In air		Length	Drum size	Approx. gross weight
No. × mm²		mm	mm	(mm)	mm	mm	kg/km	Ω/km	Ω/km	Ω/km	μF/km	Amps	Amps	Amps	kA (r.m.s.)	m		kg
3×25 rm/v	6	4.2	0.5	4.0×0.8	1.72	46	2470	1.20	1.44	0.139	0.436	73	61	73	1.90	500	A1608	1570
3×35 rm/v	6	4.2	0.5	4.0×0.8	1.88	49	2800	0.868	1.04	0.132	0.480	86	72	87	2.66	500	A1608	1730
3×50 rm/v	6	4.2	0.5	4.0×0.8	1.88	51	3060	0.641	0.770	0.126	0.525	100	86	105	3.80	500	B1809	1970
3×70 rm/v	12	4.2	0.5	4.0×0.8	2.04	55	3560	0.443	0.532	0.119	0.589	125	105	130	5.32	500	B2010	2310
3×95 rm/v	15	4.2	0.6	4.0×0.8	2.20	60	4160	0.320	0.385	0.113	0.661	150	125	160	7.22	500	B2010	2610
3×120 rm/v	15	4.2	0.6	4.0×0.8	2.20	64	4710	0.253	0.305	0.108	0.728	165	140	185	9.12	500	B2212	3060
3×150 rm/v	15	4.2	0.6	4.0×0.8	2.36	67	5230	0.206	0.249	0.105	0.780	190	160	210	11.4	500	B2212G	3320
3×185 rm/v	30	4.2	0.7	4.0×0.8	2.52	72	6090	0.164	0.199	0.103	0.859	215	185	235	14.1	500	B2311	3850
3×240 rm/v	30	4.2	0.7	4.0×0.8	2.68	78	7170	0.125	0.152	0.099	0.953	245	210	270	18.2	450	B2414	4090
3×300 rm/v	30	4.2	0.7	4.0×0.8	2.68	83	8120	0.100	0.123	0.096	1.040	275	235	310	22.8	350	B2414	3700
3×400 rm/v	53	4.2	0.7	4.0×0.8	3.00	92	9670	0.0778	0.0975	0.093	1.170	315	275	365	30.4	200	B2414G	2790
3×500 rm/v	53	4.2	0.7	4.0×0.8	3.00	99	11380	0.0605	0.0767	0.079	1.250	365	320	435	38.0	200	B2616G	3240

[a] Cables of 6.35/11 kV grade (grounded system) are also considered suitable for use on 6.6/6.6 kV (ungrounded system)

Courtesy: CCI

II Paper insulated cables up to 33 kV

Table A16.8 6.35/11 kV (Grounded system) paper insulated belted cables (IS:692)

Conductor (aluminium)				Thickness of insulation		Lead sheath		Armouring		Approx. over all dia.	Approx. net weight of cable	Normal delivery length	Drum Size type A	Approx. gross weight of delivery length including drum	Maximum d.c. resistance at 20°C	Approx. a.c. resistance of conductor at operating temp. 65°C	Approx. reactance per phase at 50 Hz	Approx. capacitance per phase	Current rating			Short-circuit rating for 1 second
Number of cores	Cross-sectional area	Configuration	Minimum no. of wires	Cond/cond. (nom.)	Cond/sheath (nom.)	Thickness (nom.)	Approx. dia. over armouring (nom)	Thickness of each tape (nom.)	Approx. dia. over armouring (nom.)										Direct in ground	In duct	In air	
	mm²			mm	mm	mm	mm	mm	mm	mm	kg/km	mm		kg	Ω/km	Ω/km	Ω/km	μF/km	Amps	Amps	Amps	kA
3	16	RM	7	5.3	3.8	1.5	27	0.5	32	38	3000	500	1506	1790	1.91	2.26	0.120	0.265	58	49	50	1.25
3	25	SM	6	5.3	3.8	1.5	26	0.5	31	37	2990	500	1407	1685	1.20	1.42	0.110	0.315	72	64	68	1.95
3	35	SM	6	5.3	3.8	1.6	29	0.5	34	39	3410	500	1506	1990	0.868	1.03	0.107	0.345	84	74	80	2.73
3	50	SM	6	5.3	3.8	1.7	31	0.5	36	42	3910	700	1810	3240	0.641	0.757	0.102	0.390	105	92	100	3.90
3	70	SM	12	5.3	3.8	1.8	34	0.8	40	47	4970	850	2010	4820	0.443	0.523	0.096	0.435	130	115	125	5.46
3	95	SM	15	5.3	3.8	1.8	37	0.8	43	50	5560	700	2010	4490	0.320	0.378	0.094	0.480	155	135	155	7.41
3	120	SM	15	5.3	3.8	2.0	39	0.8	46	52	6320	600	2010	4390	0.253	0.300	0.091	0.525	170	155	175	9.36
3	150	SM	15	5.3	3.8	2.0	42	0.8	48	54	6850	500	2012	4030	0.206	0.244	0.089	0.565	190	175	200	11.7
3	185	SM	30	5.3	3.8	2.1	46	0.8	52	59	7880	400	2012	3750	0.164	0.196	0.087	0.605	220	200	230	14.4
3	225	SM	30	5.3	3.8	2.2	49	0.8	55	62	8830	350	2012	3690	0.134	0.160	0.086	0.670	240	220	260	17.6
3	240	SM	30	5.3	3.8	2.3	49	0.8	56	63	9220	350	2012	3830	0.125	0.150	0.085	0.710	250	225	275	18.7
3	300	SM	30	5.3	3.8	2.4	56	0.8	62	69	10890	500	2414	6410	0.100	0.121	0.084	0.750	280	250	310	23.4
3	400	SM	53	5.3	3.8	2.6	60	0.8	66	73	12570	400	2414	5990	0.0778	0.0956	0.081	0.870	325	295	370	31.2
3	500	SM	53	5.3	3.8	2.8	66	0.8	72	80	14960	300	2616	5570	0.0605	0.0755	0.080	0.935	365	320	435	39.0

Note Thickness of lapped bedding approx. 1.5 mm. Thickness of lapped serving approx. 2.0 mm

Courtesy: CCI

Table A16.9 11/11 kV (Ungrounded system) paper insulated belted cables (IS 692)

Conductor (aluminium)				Thickness of insulation		Lead sheath		Armouring											Current rating			
Number of cores	Cross-sectional area mm²	Configuration	Minimum no. of wires	Cond/ cond. (nom.) mm	Cond/ sheath (nom.) mm	Thickness (nom.) mm	Approx. dia. over lead sheath mm	Thickness of each tape (nom.) mm	Approx. dia. over armouring (nom.) mm	Approx. over all dia. mm	Approx. net weight of cable kg/km	Normal delivery length mm	Drum Size type A	Approx. gross weight of delivery length including drum kg	Maximum a.c. resistance at 20°C Ω/km	Approx. a.c. resistance of conductor at operating temp. 65°C Ω/km	Approx. reactance per phase at 50 Hz Ω/km	Approx. capacitance per phase µF/km	Direct in ground Amps	In duct Amps	In air Amps	Short-circuit rating for 1 second kA
3	16	RM	7	5.3	5.3	1.6	30	0.5	35	41	3510	500	1506	2040	1.91	2.26	0.120	0.245	58	49	50	1.25
3	25	SM	6	5.3	5.3	1.6	29	0.5	34	40	3490	500	1506	2030	1.20	1.42	0.110	0.275	72	64	68	1.95
3	35	SM	6	5.3	5.3	1.7	32	0.5	37	43	3940	500	1608	2300	0.868	1.03	0.107	0.300	84	74	80	2.73
3	50	SM	6	5.3	5.3	1.7	34	0.8	40	46	4750	850	2010	4630	0.641	0.757	0.102	0.340	105	92	100	3.90
3	70	SM	12	5.3	5.3	1.9	37	0.8	43	50	5600	700	2010	4520	0.443	0.523	0.096	0.385	130	115	125	5.46
3	95	SM	15	5.3	5.3	1.9	40	0.8	46	53	6220	550	2010	4020	0.320	0.378	0.094	0.420	155	135	155	7.41
3	120	SM	15	5.3	5.3	2.0	42	0.8	48	55	6860	500	2212	4210	0.253	0.300	0.091	0.460	170	155	175	9.36
3	150	SM	15	5.3	5.3	2.1	45	0.8	51	58	7570	350	2012	3250	0.206	0.244	0.089	0.500	190	175	200	11.7
3	185	SM	30	5.3	5.3	2.2	49	0.8	55	62	8660	350	2012	3630	0.164	0.196	0.087	0.535	220	200	230	14.4
3	225	SM	30	5.3	5.3	2.3	52	0.8	58	65	9640	300	2216	3730	0.134	0.160	0.086	0.600	240	220	260	17.6
3	240	SM	30	5.3	5.3	2.4	52	0.8	59	66	10050	550	2414	6490	0.125	0.150	0.085	0.635	250	225	275	18.7
3	300	SM	30	5.3	5.3	2.4	58	0.8	65	72	11570	400	2414	5590	0.100	0.121	0.084	0.665	280	250	310	23.4
3	400	SM	53	5.3	5.3	2.7	63	0.8	69	76	13520	350	2616	5810	0.0778	0.0956	0.081	0.775	325	295	370	31.2
3	500	SM	53	5.3	5.3	2.9	69	0.8	75	83	16000	250	2616	5080	0.0605	0.0755	0.080	0.825	365	320	435	39.0

Note Thickness of lapped bedding approx. 1.5 mm. Thickness of lapped serving approx. 2.0 mm

Table A16.10 12.7/22 kV (Grounded system) paper insulated screened (H) cables (IS 692)

Conductor (Aluminium)					Lead sheath		Armouring											Current rating			
Number of cores	Cross-sectional area mm²	Configuration	Minimum no. of wires	Thickness of insulation (nom.) mm	Thickness (nom.) mm	Approx. dia. over lead sheath mm	Thickness of each tape (nom.) mm	Approx. dia. over armouring mm	Approx. over all dia. mm	Approx. net weight of cable kg/km	Normal delivery length mm	Drum size type A	Approx. gross weight of delivery length including drum kg	Maximum d.c. resistance at 20°C Ω/km	Approx. a.c. resistance of conductor at operating temp. 65°C Ω/km	Approx. reactance per phase at 50 Hz Ω/km	Approx. capacitance per phase µF/km	Direct in ground Amps	In duct Amps	In air Amps	Short-circuit rating for 1 second kA
3	25	RM/V	6	5.8	2.0	43	0.8	49	55	6520	500	2212	4040	1.20	1.42	0.147	0.216	72	66	72	1.95
3	35	RM/V	6	5.8	2.1	45	0.8	51	58	7190	350	2012	3120	0.868	1.03	0.139	0.239	88	79	88	2.73
3	50	RM/V	6	5.8	2.2	48	0.8	54	61	7900	350	2012	3370	0.641	0.757	0.132	0.265	105	97	105	3.90
3	70	RM/V	12	5.8	2.3	51	0.8	58	65	8900	300	2216	3510	0.443	0.523	0.125	0.296	130	120	130	5.46
3	95	SM	15	5.8	2.2	52	0.8	58	65	9030	300	2216	3550	0.320	0.378	0.116	0.355	155	140	160	7.41
3	120	SM	15	5.8	2.4	54	0.8	60	68	10030	500	2414	5980	0.253	0.300	0.112	0.387	170	155	180	9.36
3	150	SM	15	5.8	2.4	56	0.8	63	70	10670	450	2414	5760	0.206	0.244	0.108	0.419	190	175	210	11.7
3	185	SM	30	5.8	2.5	60	0.8	66	74	11910	350	2616	5250	0.164	0.195	0.105	0.456	220	205	245	14.4
3	225	SM	30	5.8	2.6	64	0.8	70	78	13130	300	2616	5020	0.134	0.159	0.102	0.496	240	225	275	17.6
3	240	SM	30	5.8	2.7	64	0.8	71	78	13610	300	2616	5160	0.125	0.149	0.101	0.510	250	230	285	18.7
3	300	SM	30	5.8	2.8	70	0.8	76	84	15430	250	2616	4940	0.100	0.120	0.098	0.557	275	255	320	23.4
3	400	SM	53	5.8	3.0	75	0.8	81	90	17750	200	2818S	4910	0.0778	0.0941	0.095	0.617	310	285	380	31.2

Note Thickness of lapped bedding approx. 1.5 mm. Thickness of lapped serving approx. 2.0 mm

Table A16.11 19/33 kV (Grounded system) paper insulated screened (H) cables (IS 692)

Conductor (Aluminium)				*Thickness of insulation (nom.)*	*Lead sheath*		*Armouring*		*Approx. over-all dia.*	*Approx. net weight of cable*	*Normal delivery length*	*Drum Size type A*	*Approx. gross weight of delivery length including drum*	*Maximum d.c. resistance at 20°C*	*Approx. a.c. resistance of conductor at operating temp. 65°C*	*Approx. reactance per phase at 50 Hz*	*Approx. capacitance per phase*	*Current rating*			*Short-circuit rating for 1 second*
Number of cores	*Cross-sectional area*	*Configuration*	*Minimum no. of wires*		*Thickness (nom.)*	*Approx. dia. over lead sheath*	*Thickness of each tape (nom.)*	*Approx. dia. over armouring (nom.)*										*Direct in ground*	*In duct*	*In air*	
	mm²		*mm*	*mm*	*mm*	*mm*	*mm*	*mm*	*mm*	*kg/km*	*mm*		*kg*	*Ω/km*	*Ω/km*	*Ω/km*	*μF/km*	*Amps*	*Amps*	*Amps*	*kA*
3	70	RM/V	12	8.0	2.6	61	0.8	67	75	11670	350	2616	5160	0.443	0.523	0.138	0.239	130	120	135	5.46
3	95	SM	15	7.6	2.5	60	0.8	66	73	11420	400	2414	5530	0.320	0.378	0.125	0.293	155	140	160	7.41
3	120	SM	15	7.6	2.6	62	0.8	68	76	12290	350	2616	5380	0.253	0.299	0.120	0.319	170	155	180	9.36
3	150	SM	15	7.1	2.6	62	0.8	68	76	12460	350	2616	5440	0.206	0.244	0.115	0.360	190	175	210	11.7
3	185	SM	30	7.1	2.7	66	0.8	72	80	13780	300	2616	5210	0.164	0.195	0.111	0.390	220	200	240	14.4
3	225	SM	30	7.1	2.8	69	0.8	76	84	15090	250	2616	4850	0.134	0.159	0.108	0.423	240	220	275	17.6
3	240	SM	30	7.1	2.9	70	0.8	76	84	15600	250	2818S	5260	0.125	0.149	0.107	0.435	245	230	285	18.7
3	300	SM	30	7.1	2.9	75	0.8	82	90	17260	200	2818S	4810	0.100	0.119	0.103	0.474	270	255	320	23.4
3	400	SM	53	7.1	3.1	81	0.8	87	95	19690	150	2820S	4330	0.0778	0.0937	0.100	0.523	310	295	380	31.2

Note Thickness of lapped bedding approx. 1.5 mm. Thickness of lapped serving approx. 2.0 mm
Courtesy *CCI*

(III) XLPE Cables up to 33 kV

Table A16/12 Armoured cable 3.8/6.6 kV (Grounded system)

No. of cores and cross-sectional area of conductor	*Conductor min. no. of wires*	*Nominal thickness of XLPE insulation*	*Minimum thickness of common covering (wrapped)*	*Armouring nom. dimensions of flat wire (strip)*	*Minimum thickness of PVC outer sheath*	*Approx. overall diameter*	*Approx. net weight of cable*	*Normal delivery length*	*Drum size*	*Approx. gross wt. (for normal delivery length)*	*Max. d.c. resistance at 20°C*	*Approx. a.c. resistance at operating temp. 90°C*	*Approx. reactance at 50 Hz*	*Approx capacitance per phase*	*Current rating*		*Short-circuit rating for 1 second*
															Direct in ground	*In air*	
No. × mm²		*mm*	*mm*	*mm×mm*	*mm*	*mm*	*kg/km*	*m*		*kg*	*Ω/km*	*Ω/km*	*Ω/km*	*μf/km*	*Amps*	*Amps*	*kA (r.m.s.)*
3×25 rm/v	6	2.8	0.4	4.0×0.8	1.56	40	1830	500	A 1506	1200	1.20	1.54	0.130	0.235	93	100	2.35
3×35 rm/v	6	2.8	0.4	4.0×0.8	1.72	43	2110	500	A 1608	1380	0.868	1.11	0.123	0.260	110	120	3.29
3×50 rm/v	6	2.8	0.5	4.0×0.8	1.72	46	2380	500	A 1608	1520	0.641	0.822	0.117	0.285	130	145	4.70
3×70 rm/v	12	2.8	0.5	4.0×0.8	1.88	50	2820	500	B 1809	1850	0.443	0.568	0.111	0.325	160	180	6.58
3×95 rm/v	15	2.8	0.5	4.0×0.8	1.88	54	3300	500	B 2010	2180	0.320	0.410	0.106	0.370	190	220	8.93
3×120 rm/v	15	2.8	0.6	4.0×0.8	2.04	59	3830	500	B 2010	2440	0.253	0.325	0.102	0.410	215	255	11.3
3×150 rm/v	15	2.8	0.6	4.0×0.8	2.20	62	4320	500	B 2212	2860	0.206	0.265	0.099	0.440	240	285	14.1
3×185 rm/v	30	2.8	0.6	4.0×0.8	2.20	66	4850	500	B 2212G	3120	0.164	0.211	0.096	0.480	270	330	17.4
3×240 rm/v	30	2.8	0.7	4.0×0.8	2.36	72	5870	500	B 2311	3740	0.125	0.161	0.093	0.540	315	385	22.6
3×300 rm/v	30	3.0	0.7	4.0×0.8	2.52	78	6950	400	B 2616	3740	0.100	0.130	0.092	0.555	355	440	28.2
3×400 rm/v	53	3.3	0.7	4.0×0.8	2.84	89	8520	300	B 2414	3420	0.0778	0.102	0.090	0.575	405	510	37.6
3×500 rm/v	53	3.5	0.7	4.0×0.8	3.00	97	10270	200	B2414G	2910	0.0605	0.0782	0.089	0.605	455	590	47.0

Courtesy *CCI*

Table A16.13 Armoured cable 6.35/11 kV (grounded system)

No. of cores and cross-sectional area of conductor No. × mm²	*Conductor min. no. of wires*	*Nominal thickness of XLPE insulation mm*	*Minimum thickness of common covering (wrapped) mm*	*Armouring nom. dimensions of flat wire (strip) mm × mm*	*Minimum thickness of PVC outer sheath mm*	*Approx. overall diameter mm*	*Approx. net weight of cable kg/km*	*Normal delivery length m*	*Drum size*	*Approx. gross wt. (for normal delivery length) kg*	*Max. d.c. resistance at 20°C Ω/km*	*Approx. a.c. resistance at operating temp. 90°C Ω/km*	*Approx. reactance at 50 Hz Ω/km*	*Approx. capacitance per phase μf/km*	*Current rating*		*Short-circuit rating for 1 second kA (r.m.s.)*
															Direct in ground Amps	*In air Amps*	
3×25 rm/v	6	3.6	0.4	4.0×0.8	1.72	44	2140	500	A1608	1400	1.20	1.54	0.137	0.195	93	100	2.35
3×35 rm/v	6	3.6	0.5	4.0×0.8	1.72	47	2420	500	A1608	1540	0.868	1.11	0.130	0.215	110	120	3.29
3×50 rm/v	6	3.6	0.5	4.0×0.8	1.88	50	2710	500	A1809	1790	0.641	0.822	0.124	0.235	130	145	4.70
3×70 rm/v	12	3.6	0.5	4.0×0.8	1.88	54	3150	500	B2010	2100	0.443	0.568	0.117	0.265	160	180	6.58
3×95 rm/v	15	3.6	0.6	4.0×0.8	2.04	58	3700	500	B2010	2380	0.320	0.410	0.111	0.300	190	220	8.93
3×120 rm/v	15	3.6	0.6	4.0×0.8	2.20	63	4280	500	B2212	2840	0.253	0.325	0.107	0.330	215	255	11.3
3×150 rm/v	15	3.6	0.6	4.0×0.8	2.20	65	4660	500	B2212	3030	0.206	0.265	0.104	0.355	240	285	14.1
3×185 rm/v	30	3.6	0.7	4.0×0.8	2.36	70	5330	500	B2311	3460	0.164	0.211	0.101	0.385	270	330	17.4
3×240 rm/v	30	3.6	0.7	4.0×0.8	2.52	76	6300	500	B2311	3950	0.125	0.161	0.097	0.435	315	385	22.6
3×300 rm/v	30	3.6	0.7	4.0×0.8	2.68	81	7260	350	B2414	3400	0.100	0.130	0.095	0.475	355	440	28.2
3×400 rm/v	53	3.6	0.7	4.0×0.8	2.84	89	8810	300	B2414	3500	0.0778	0.102	0.091	0.530	405	510	37.6
3×500 rm/v	53	3.6	0.7	4.0×0.8	3.00	97	10310	200	B2414G	2920	0.0605	0.0782	0.089	0.590	455	590	47.0

Table A16.14 Armoured cable 12.7/22 kV (grounded system)

No. of cores and cross-sectional area of conductor No. × mm²	*Conductor min. no. of wires*	*Nominal thickness of XLPE insulation mm*	*Minimum thickness of common covering (wrapped) mm*	*Armouring nom. dimensions of flat wire (strip) mm × mm*	*Minimum thickness of PVC outer sheath mm*	*Approx. overall diameter mm*	*Approx. net weight of cable kg/km*	*Normal delivery length m*	*Drum size*	*Approx. gross wt. (for normal delivery length) kg*	*Max. d.c. resistance at 20°C Ω/km*	*Approx. a.c. resistance at operating temp. 90°C Ω/km*	*Approx. reactance at 50 Hz Ω/km*	*Approx capacitance per phase μf/km*	*Current rating*		*Short-circuit rating for 1 second kA (r.m.s.)*
															Direct in ground Amps	*In air Amps*	
3×35 rm/v	6	6.0	0.6	4.0×0.8	2.04	59	3470	500	B2010	2260	0.868	1.11	0.147	0.150	110	120	3.29
3×50 rm/v	6	6.0	0.6	4.0×0.8	2.20	62	3830	500	B2212	2620	0.641	0.822	0.140	0.165	130	145	4.70
3×70 rm/v	12	6.0	0.6	4.0×0.8	2.36	66	4330	500	B2212G	2860	0.443	0.568	0.132	0.180	160	180	6.58
3×95 rm/v	15	6.0	0.7	4.0×0.8	2.36	70	4940	500	B2311	3270	0.320	0.410	0.125	0.205	190	220	8.93
3×120 rm/v	15	6.0	0.7	4.0×0.8	2.52	74	5580	500	B2311	3590	0.253	0.325	0.120	0.220	215	255	11.3
3×150 rm/v	15	6.0	0.7	4.0×0.8	2.68	78	6180	400	B2616	3430	0.206	0.265	0.116	0.235	240	285	14.1
3×185 rm/v	30	6.0	0.7	4.0×0.8	2.68	82	6820	350	B2414	3250	0.164	0.211	0.113	0.255	265	330	17.4
3×240 rm/v	30	6.0	0.7	4.0×0.8	2.84	89	8040	300	B2414	3270	0.125	0.161	0.108	0.285	310	385	22.6
3×300 rm/v	30	6.0	0.7	4.0×0.8	3.00	94	9080	250	B2616G	3230	0.100	0.130	0.105	0.310	350	440	28.2
3×400 rm/v	53	6.0	0.7	4.0×0.8	3.00	101	10420	200	B2616G	3040	0.0778	0.102	0.101	0.345	400	510	37.6
3×500 rm/v	53	6.0	0.7	4.0×0.8	3.00	108	12170	200	B2616G	3390	0.0605	0.0782	0.097	0.380	450	590	47.0

Courtesy: CCI

Table A16.15 Armoured cable 19/33 kV (grounded system)

No. of cores and cross-sectional area of conductor No. × mm^2	*Conductor min. no. of wires*	*Nominal thickness of XLPE insulation mm*	*Minimum thickness of common covering (wrapped) mm*	*Armouring nom. dimensions of flat wire (strip) mm × mm*	*Minimum thickness of PVC outer sheath mm*	*Approx. overall diameter mm*	*Approx. net weight of cable kg/km*	*Normal delivery length m*	*Drum size*	*Approx. gross wt. (for normal delivery length) kg*	*Max. d.c. resistance at 20°C Ω/km*	*Approx. a.c. resistance at operating temp. 90°C Ω/km*	*Approx. reactance at 50 Hz Ω/km*	*Approx. capacitance per phase μf/km*	*Current rating*		*Short-circuit rating for 1 second kA (r.m.s.)*
															Direct in ground Amps	*In air Amps*	
3×50 rm/v	6	8.8	0.7	4.0×0.8	2.52	76	5340	500	B2311	3470	0.641	0.822	0.156	0.125	130	145	4.70
3×70 rm/v	12	8.8	0.7	4.0×0.8	2.68	80	5960	350	B2414	2950	0.443	0.568	0.146	0.140	160	180	6.58
3×95 rm/v	15	8.8	0.7	4.0×0.8	2.84	84	6710	350	B2616	3310	0.320	0.410	0.139	0.155	190	220	8.93
3×120 rm/v	15	8.8	0.7	4.0×0.8	2.84	89	7480	300	B2414	3100	0.253	0.325	0.133	0.170	215	255	11.3
3×150 rm/v	15	8.8	0.7	4.0×0.8	3.00	92	7980	200	B2414G	2460	0.206	0.265	0.128	0.180	240	285	14.1
3×185 rm/v	30	8.8	0.7	4.0×0.8	3.00	96	8730	200	B2414G	2610	0.164	0.211	0.124	0.190	265	330	17.4
3×240 rm/v	30	8.8	0.7	4.0×0.8	3.00	102	9820	200	B2616G	2920	0.125	0.161	0.119	0.210	310	385	22.6
3×300 rm/v	30	8.8	0.7	4.0×0.8	3.00	107	11030	200	B2616G	3170	0.100	0.130	0.115	0.230	350	440	28.2
3×400 rm/v	53	8.8	0.7	4.0×0.8	3.00	114	12470	200	A2818G	3970	0.0778	0.102	0.110	0.250	400	510	37.6

Courtesy: CCI

A16.2 Technical details

We have reproduced in a few Tables (A16.3–A16.15) for cables that are used more commonly in all voltage ratings and with aluminium conductors. For other cables and copper conductor cables, refer to the manufacturers of their catalogues.

A16.3 Service conditions

The standard parameters of installation on which the ratings of the cables are based as in the previous tables, are noted in Table A16.16.

Table A16.16 Standard service conditions

Parameter		*PVC*	*PILC*	*XLPE*
Ground temperature	°C	30	30	30
Ambient air temperature	°C	40	40	40
Depth of laying in ground				
Up to 1.1 kV	cm	75	–	–
3.3 to 11 kV	cm	90	90	90
22 and 33 kV	cm	–	105	105
Thermal resistivity of soil,	°C cm/W	150	150	150
Thermal resistivity of cable insulation,	°C cm/W	650	550	350

A16.4 Recommended derating factors

These are common for all types and sizes of cables, except where noted. Derating of cable ratings resulting from site conditions and laying parameters are provided in Tables A16.17–A16.26.

A16.5 Voltage drop

It is essential to keep the voltage drop in a power cable within the permissible limits, particularly for long LT cables say, 25 m and above, similar to a bus system (Section 28.6.2). This may not be necessary in HT cables, where the voltage drop as a percentage of the system voltage may be low. The maximum permissible voltage variation on a system as discussed in Chapters 1 and 12 is ±6% of the rated voltage. Therefore, during normal operation the voltage drop in an individual feeder cable should not be more than 1–2% of the rated voltage for correct operation of the drive and the load. This is due to the fact that there may already be many more drops in the power network from the receiving point up to the final load point and all may add up to exceed the permissible limits. (Refer to Figure A16.3 for more clarity.) During a motor start it may be kept within 3–5%. The voltage drop in a cable during start can be expressed by

Voltage drop $= I_{st} \cdot Z$

where I_{st} = starting current of the motor in amperes, and

Z = impedance of the cable for that length in ohms.

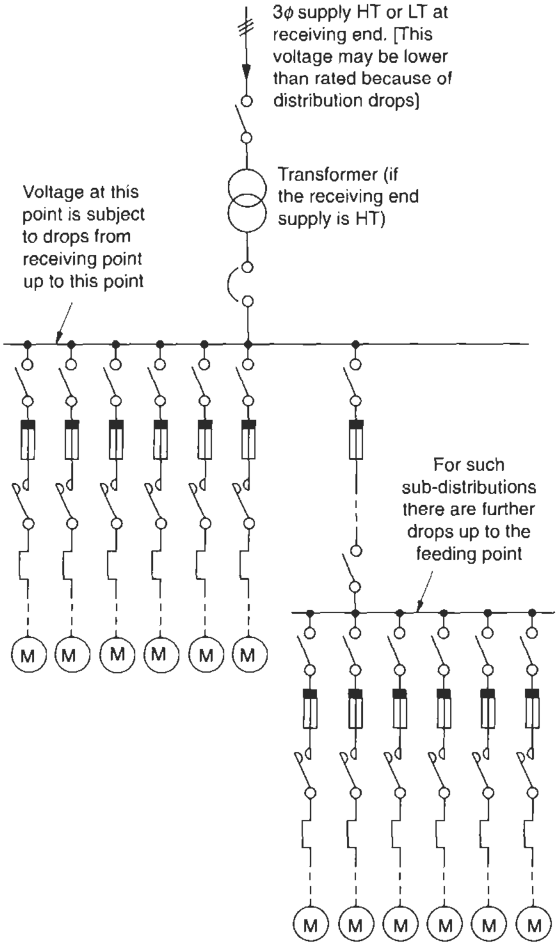

Figure A16.3 Voltage drop at various points in a distribution system

This value can be determined from the data available on a per km basis in cable manufacturers' catalogues and as provided in the previous tables. For the given a.c. resistance and inductive reactance it can be determined by:

$$Z = \sqrt{R_{ac}^2 + X_L^2} \quad \text{ohm}$$

where

R_{ac} = a.c. resistance in ohm

X_L = inductive reactance in ohm

It is possible that at certain installations, even after selecting the size of the cables on the basis of the site conditions and the laying parameters as discussed above, a larger cable may become imperative as a consequence of a higher voltage drop.

Example

Consider a 55 kW motor to be switched direct on-line and installed, say, at 75 m from its controlgear. To select the most appropriate cable size refer to Table 12.4, where

I_r = 100A, and

Maximum $I_{st} = 7 \times 100$A

∴ recommended cable size as in Table 12.4 = 3 × 70 mm^2. Considering an armoured cable, as in Table A16.3, a.c. resistance/phase

R_{ac} = 0.532 – Ω/1000 m at 70°C

and inductive reactance/phase, X_L = 0.083 Ω/1000 m at 50 Hz.

$$\therefore \text{ impedance } Z = \sqrt{0.532^2 + 0.083^2}$$

$$= 0.538\ \Omega/1000\text{ m}$$

$$\text{and voltage drop during start} = 7 \times 100 \times 0.538 \times \frac{75}{1000}$$

$$= 28.25\text{ V}$$

which is almost 6.8% for a 415V system and is not recommended. This cable size is therefore inadequate for such a feeder length and the next size, i.e. 3 × 95 mm^2, may be chosen.

However, during normal running, 3 × 70 mm^2 cable will have a voltage drop of just 4.03 V (100 × 0.538 × 75/1000 = 4.03 V), which is less than 1% of 415 V. Therefore, depending upon the duty the motor may have to perform, and other loads connected on the same bus, the design engineer would be a better judge to decide whether to select a higher size of cable or be content with this marginal case.

For clarity, voltage drop in the next size of cable, i.e. 3 × 95 mm^2, is also calculated as

$$R_{ac} = 0.385\ \Omega/1000\text{ m at }70°\text{C}$$

$$X_L = 0.083\ \Omega/1000\text{ m at }50\text{ Hz}$$

$$\therefore \quad Z = \sqrt{0.385^2 + 0.083^2}$$

$$= 0.394\ \Omega/1000\text{ m}$$

Table A16.17 Rating factors for variation in ambient air temperature

Air temp. °C		*15*	*20*	*25*	*30*	*35*	*40*	*45*	*50*	*55*
Rating factor	PVC	1.40	1.32	1.25	1.16	1.09	1.00	0.90	0.80	0.68
	PILC	–	–	1.30	1.21	1.10	1.00	0.88	–	–
	XLPE	1.25	1.2	1.16	1.11	1.05	1.00	0.94	0.88	0.82

Table A16.18 Rating factors for variation in ground temperature

Ground temp. °C		*15*	*20*	*25*	*30*	*35*	*40*	*45*	*50*	*55*
Rating factor	PVC	1.17	1.12	1.06	1.00	0.94	0.87	0.79	0.71	0.61
	PILC	–	–	1.30	1.21	1.10	1.00	0.88	–	–
	XLPE	1.12	1.08	1.04	1.00	0.96	0.91	0.87	0.82	–

Table A16.19 Rating factors for multicore cables laid on open racks in air

Arrangement 1	*No. of racks*	*No. of cables per rack*				
		1	*2*	*3*	*6*	*9*
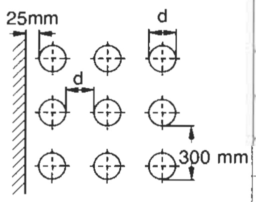	1	1.00	0.98	0.96	0.93	0.92
	2	1.00	0.95	0.93	0.90	0.89
	3	1.00	0.94	0.92	0.89	0.88
	6	1.00	0.93	0.90	0.87	0.86

Arrangement 2	*No. of racks*	*No. of cables per rack*				
		1	*2*	*3*	*6*	*9*
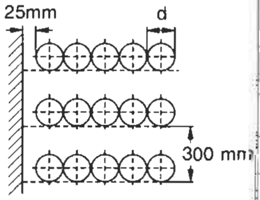	1	1.00	0.84	0.80	0.75	0.73
	2	1.00	0.80	0.76	0.71	0.69
	3	1.00	0.78	0.74	0.70	0.68
	6	1.00	0.76	0.72	0.68	0.66

Table A16.20 Rating factors for single core cable in trefoil circuits laid on open racks in air

Arrangement	*No. of racks*	*No. of circuits per rack*		
		1	*2*	*3*
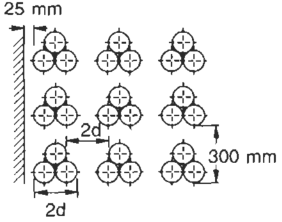	1	1.00	0.98	0.96
	2	1.00	0.95	0.93
	3	1.00	0.94	0.92
	6	1.00	0.93	0.90

Table A16.21 Rating factors for groups of twin and multicore cables laid directly in ground in horizontal formation

No. of cables	*Rating factor for axial spacing*				
	Touching	*15 cm*	*30 cm*	*45 cm*	*60 cm*
2	0.79	0.82	0.87	0.90	0.91
3	0.69	0.75	0.79	0.83	0.86
4	0.62	0.69	0.74	0.79	0.82
6	0.54	0.61	0.69	0.75	0.78
8	0.50	0.57	0.66	0.72	0.76

Table A16.22 Group rating factors for circuits of two single-core cables, side by side and touching, in horizontal formation, laid directly in ground

No. of circuits	*Spacing (between centres of circuits)*				
	Touching	*15 cm*	*30 cm*	*45 cm*	*60 cm*
2	0.79	0.86	0.91	0.93	0.95
3	0.69	0.78	0.84	0.88	0.91
4	0.64	0.73	0.81	0.86	0.88
6	0.56	0.67	0.77	0.83	0.87
8	0.51	0.65	0.75	0.82	0.86

Table A16.23 Group rating factors for circuits of three single core cables in trefoil and touching, horizontal formation laid directly in ground

No. of circuits	*Spacing (Between centres of circuits)*				
	Touching	*15 cm*	*30 cm*	*45 cm*	*60 cm*
2	0.78	0.81	0.85	0.88	0.90
3	0.68	0.71	0.77	0.81	0.83
4	0.61	0.65	0.72	0.76	0.79
6	0.53	0.58	0.66	0.71	0.76
8	0.48	0.54	0.62	0.67	0.72

Table A16.24 Rating factor for groups of twin and multicore cables laid directly in ground in tier formation

No. of circuits	*Rating factor for axial spacing*				
	Touching	*15 cm*	*30 cm*	*45 cm*	*60 cm*
4	0.60	0.67	0.73	0.76	0.78
6	0.51	0.57	0.63	0.67	0.69
8	0.45	0.51	0.57	0.57	0.61

Table A16.25 Rating factors for variation in thermal resistivity of soil (multicore cables laid directly in the ground)

Nominal area of conductor (mm^2)	*Rating factor for value of thermal resistivity of soil in C cm/W*					
	100	*120*	*150*	*200*	*250*	*300*
25	1.14	1.08	1.00	0.91	0.84	0.78
35	1.15	1.08	1.00	0.91	0.84	0.77
50	1.15	1.08	1.00	0.91	0.84	0.77
70	1.15	1.08	1.00	0.90	0.83	0.76
95	1.15	1.08	1.00	0.90	0.83	0.76
120	1.17	1.09	1.00	0.90	0.82	0.76
150	1.17	1.09	1.00	0.90	0.82	0.76
185	1.18	1.09	1.00	0.89	0.81	0.75
240	1.18	1.09	1.00	0.89	0.81	0.75
300	1.18	1.09	1.00	0.89	0.81	0.75
400	1.19	1.10	1.00	0.89	0.81	0.75
500	1.21	1.10	1.00	0.89	0.81	0.75
630	1.22	1.10	1.00	0.89	0.81	0.74

Table A16.26 Rating factors for variation in thermal resistivity of soil, three single-core cables laid directly in the ground (three cables in trefoil, touching)

Nominal area of conductor (mm^2)	*Rating for value of thermal resistivity of soil in C cm/W*					
	100	*120*	*150*	*200*	*250*	*300*
25	1.19	1.09	1.00	0.88	0.80	0.74
35	1.20	1.09	1.00	0.88	0.80	0.74
50	1.20	1.09	1.00	0.88	0.80	0.74
70	1.21	1.10	1.00	0.88	0.80	0.74
95	1.22	1.10	1.00	0.88	0.80	0.74
120	1.22	1.10	1.00	0.88	0.79	0.74
150	1.22	1.10	1.00	0.88	0.79	0.73
185	1.22	1.10	1.00	0.88	0.79	0.73
240	1.22	1.10	1.00	0.88	0.79	0.73
300	1.22	1.10	1.00	0.88	0.79	0.72
400	1.24	1.11	1.00	0.88	0.79	0.72
500	1.24	1.11	1.00	0.88	0.79	0.72
630 to 1000	1.24	1.11	1.00	0.88	0.79	0.72

Courtesy: CCI

and the voltage drop during start

$$= 7 \times 100 \times 0.394 \times \frac{75}{1000} \text{ volts}$$

$$= 20.7 \text{ V}$$

which is still almost 5% of a 415 V system and is again, only marginally suitable for such an application. For still greater length of feeder cable line, a yet higher size of cable may be needed but such lengths are seldom required.

A16.6 Skin and proximity effects in a multicore cable

The influence of skin effects in a multi-core cable is almost the same as that of a multiphase busbar system, discussed in Sections 28.7 and 28.8. However, unlike a busbar system, the resistance and inductive reactance for various sizes of cables can be easily measured and are provided by leading manufacturers as standard practice in their technical data sheets. To this extent, making an assessment of skin effects in cables is easy compared to a busbar system. Since all the phases in a cable, of a 3-core or $3^1/_2$-core are in a regularly twisted formation throughout the length of the cable, they represent the case of an ideal phase transposition (Section 28.8.4(3)) and almost nullify the effect of proximity.

A16.7 Short-time rating of cables

Calculating the minimum size of cable for a particular fault level is enough and requires no more elaborate calculations as for a bus system for the suitability of its structure, mounting supports and hardware etc., as discussed in Section 28.4.2. The reason is the constructional flexibility of cables and their direct laying into trenches or on cable racks. In the event of a fault the cables will not damage the trenches or racks. The enclosure, mounting supports and hardware etc. are absent unlike in the case of a bus system. One can therefore determine only the suitability of aluminium size for a given fault level (thermal effect), and need not consider any mechanical factor. Since, all the 3 or $3^1/_2$ cores of the cable are in the form of almost a solid mass, during a fault, dissipation of heat would be slightly less while the direct thermal influence of one core on the other would be slightly more than in the case of a bus system. But for all practical purposes equation (28.1) and Figure 28.5 for determining the minimum conductor size will also be valid in the case of cables with very little variation, i.e.

$$\theta_t = \frac{K}{100} \times \left(\frac{I_{SC}}{A}\right)^2 \times (1 + \propto_{20} \theta) t \qquad (28.1)$$

The values of θ_t and θ are now based on the short-time temperature and the continuous operating temperature assumed for the various types of cables as in Table A16.2. Based on these values, the above equation can be reduced to the following for different types of cables:

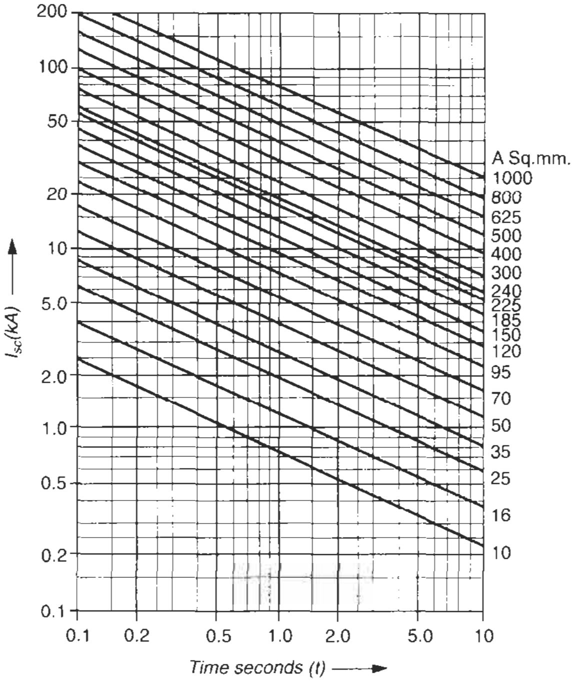

(a) For PVC cables up to 11 kV, $\frac{I_{SC}}{A}\sqrt{t} = 0.076$

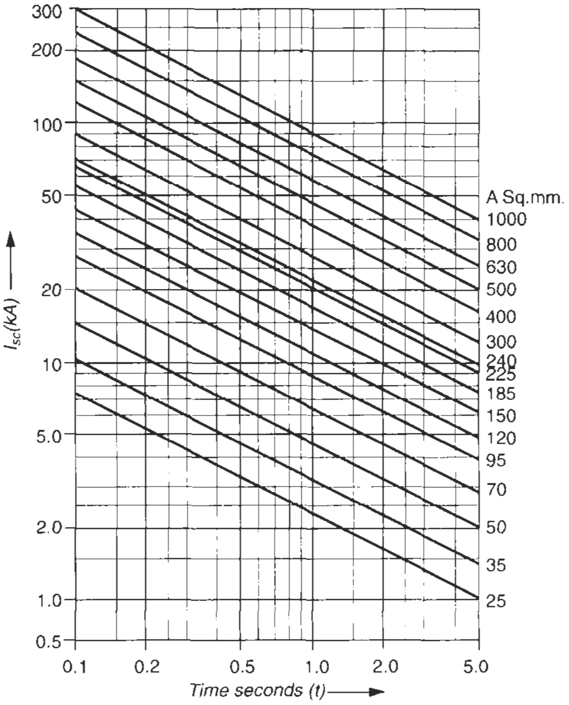

(b) For XLPE cables 6.6 kV to 33 kV, $\frac{I_{SC}}{A}\sqrt{t} = 0.094$

Figure A16.4 Current – time characteristics for aluminium cables for the selection of minimum cable size for a given fault level

$$\frac{I_{sc}}{A} \times \sqrt{t} = 0.076 \text{ for PVC cables*}$$
$$= 0.078 \text{ for paper insulated cables,* and}$$
$$= 0.094 \text{ for XLPE cables etc*.}$$

For the selection of cables, the same guidelines would apply as for a bus system in a switchgear assembly (Section 13.4). The outgoing circuits that would have a diminishing value of fault current, due to circuit impedance, are also normally protected through a current limiting device. A normal size of cable, therefore, commensurate with the thermal rating of the circuit, will be adequate in most cases, subject to applicable deratings and voltage drops, discussed above. However, for incoming cables connecting the incoming source of supply and the power-receiving end, an exercise to determine their minimum size for the system fault level would be essential, based on graphs of Figures A16.4(a) and (b) or similar graphs for other types of cables. Refer to Figure A16.5 for more clarity. There will be no need to check on the mechanical strength of cables and their supports.

A16.8 Termination of cables

This plays an important role and requires utmost care. While termination of LT PVC cables is easier with the help of a crimping tool, HT cables need a proper kit for jointing and end termination. The jointing material is also manufactured by the cable manufacturers. We are not providing details of these kits and their jointing procedures. These can be obtained from manufacturers' catalogues.

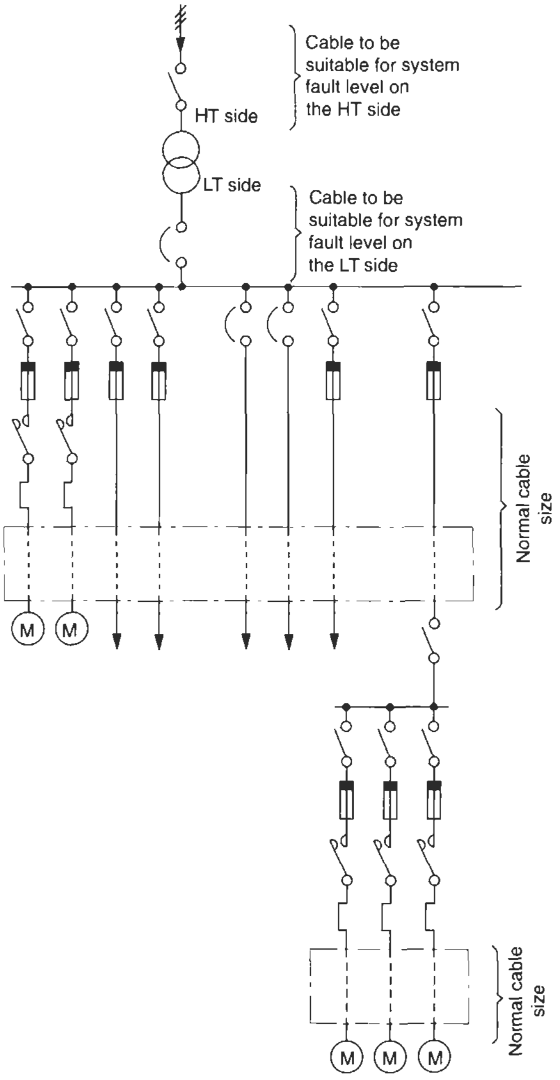

Figure A16.5 Selection of cables for power distribution system

---

*These factors are provided by CCI. They may vary slightly from one manufacturer to another, depending upon the grade of aluminium being used and the value of α_{20} considered by them. Based on the above factors, manufacturers provide the short-time rating of their cables for different types and sizes, in the shape of a graph, I_{sc} versus t. Refer to graphs drawn in Figure A16.4(a) and (b) for PVC and XLPE cables respectively, based on the above factors. Similar graphs can be drawn for other types of cables also.

Relevant Standards

IEC	*Title*	*IS*	*BS*	*ISO*
60055-1/1997	Paper insulated lead sheathed cables for voltages up to 33 kV Tests on cables and their accessories	692/1994	BS 6480/1997	–
60055-2/1989	General and construction requirements			–
60183/1990	Guide to the selection of HV cables			–
60227-1/1998	General requirements PVC insulated electric cables for voltages 3.3 kV to 11 kV	1554-1/1988	BS 6004/1995 6500 and 6746	
60227-2/1997	Test methods			
60227-3/1997	Non-sheathed cables for fixed wiring			
60227-4/1997	Sheathed cables for fixed wiring			
60227-5/1998	Flexible cables (chords)			
60227-6/1985	Lift cables and cables for flexible connections			

60228/1993	Conductors for insulated cables	8130/1991	BS 6360	–
60228A/1982	Guide to manufacturers of cables and cable connections			
60331/1970	Specification for 600/1000V and 1900/3300 V armoured electric cables having thermosetting insulation Fire resisting characteristics of electric cables: Performance requirements, sample and test conditions	– –	BS 5467/1997 –	– –
60332-1/1993	Tests on electric cables under fire conditions. Test on a single vertical insulated wire or cable	–	BS 4066-1/1995	
60332-2/1989	Test on a single small vertical insulated copper wire or cable		BS 4066-2/1995	
60502-1/1998	Cross linked poly-ethylene insulated PVC sheathed cables Power cables with extruded cross-linked insulation (XLPE cables) for voltages from 1 kV-3 kV(V_m = 3.6 kV)	7098-1/1988		
60502-2/1998	Power cables with extruded cross-linked insulation (XLPE cables) for voltages from 3.8/6.6 kV to 19/33 kV	7098-2/1988	BS 7835/1996 BS 6622/1999	–
60754-1/1994	Test on gases evolved during combustion of materials from cables Determination of the amount of halogen acid gas	–	BS 6425-1/1990	–
60754-2/1991	Determination of the degree of acidity of gases evaluated during the combustion of materials taken from cables by measuring pH and conductivity	–	BS 6425-2/1993	–
60840/1988	Tests for power cables with extruded insulation for rated voltages above 30 kV up to 150 kV (XLPE cables)	7098-3/1998	–	–
–	Flexible cables for use at mines and quarries	691/1991, 1026/1991	BS 6708/1998	–
	Elastomer insulated cables			
–	For voltages up to 1100 V	9968-1/1988	–	–
–	For voltages from 3.3 kV to 11 kV	9968-2/1991	–	–

Relevant US Standards ANSI/NEMA and IEEE

NEMA WC3/1992 (ICEA S-19)	Rubber insulated wire and cable for the transmission and distribution of electrical energy
NEMA WC7/1991 (ICEA 5-66-524)	Cross linked polyethylene insulated wire and cable for the transmission and distribution of electrical energy
NEMA WC8/1998	Ethylene propylene rubber insulated wire and cable for the transmission and distribution of power
ASTM D-2863	For oxygen index test
IEEE: 383/1992	Type test of class 1E electric cables for nuclear power generating stations
SS:424 24 17	Swedish specifications for XLPE Cables 12-420 kV

Notes

1 In the tables of relevant Standards in this book while the latest editions of the standards are provided, it is possible that revised editions have become available. With the advances of technology and/or its application, the updating of standards is a continuous process by different standards organizations. It is therefore advisable that for more authentic references, readers should consult the relevant organizations for the latest version of a standard.

2 Some of the BS or IS standards mentioned against IEC may not be identical.

3 The year noted against each standard may also refer to the year of its last amendment and not necessarily the year of publication.

Appendix 2: ANSI standard device function numbers

Device number	*Function*
1	Master element
2	Time-delay relay
3	Checking or interlocking relay
4	Master contactor
5	Stopping device
6	Starting circuit breaker
7	Anode circuit breaker
8	Control power disconnecting device
9	Reversing device
10	Unit sequence switch
11	Reserved for future application
12	Overspeed device
13	Synchronous speed device
14	Underspeed device
15	Speed frequency matching device
16	Reserved for future application
17	Shunt or discharge switch
18	Accelerating or decelerating device
19	Starting to running transition contactor
20	Electrically operated valve
21	Distance relay
22	Equalizer circuit breaker
23	Temperature control device
24	Reserved for future application
25	Synchronizing check relay
25G	Guard relay
27	Undervoltage relay
28	Flame detector
29	Isolating contactor
30	Annunciator relay
31	Separate excitation device
32	Directional reverse power relay
33	Position relay
34	Master sequence device
35	Brush operating or slip-ring short-circuiting device
36	Polarity or polarizing voltage device
37	Undercurrent under power relay (low forward power relay)
38	Bearing protective device
39	Mechanical condition monitor
40	Field relay or loss of excitation relay
41	Field circuit breaker
42	Circuit breaker, contactor, or starter
43	Manual transfer selector device or local/remote selector switch
44	Unit sequence starting relay
45	Atmospheric condition monitor
46	Reverse phase or negative sequence relay
47	Phase sequence voltage relay
48	Incomplete sequence relay
49	Thermal overload relay
50	Instantaneous overcurrent relay
50D	Definite time delay overcurrent relay
50N	Instantaneous ground fault relay
51	Inverse time overcurrent relay
51N	Inverse time ground fault relay
51GN	Inverse time generator ground fault relay
51v	Voltage controlled overcurrent relay
$\frac{50}{51}$	IDMT with instantaneous overcurrent relay
52	A.C. circuit breaker
53	Exciter or D.C. generator relay
54	Reserved for future application
55	Power factor relay
56	Field application relay
57	Short-circuiting or grounding device
58	Rectification failure relay

Device number	*Function*
59	Overvoltage relay
60	Voltage or current balance relay
61	Reserved for future application
62	Time-delay stopping or operating relay
63	Bucholz relay
64	Restricted ground fault relay
65	Governor
66	Notching or jogging device
67	A.C. directional overcurrent relay
67N	Directional ground fault relay
68	Blocking relay
69	Permissive control device
70	Rheostat
71	Level switch
72	D.C. circuit breaker
73	Load-resistor contactor
74	Alarm relay
75	Position changing mechanism
76	D.C. overcurrent relay
77	Pulse transmitter
78	Phase-angle measuring or out of step relay
79	Auto reclosing relay
80	Flow switch
81	Underfrequency relay
82	D.C. reclosing relay
83	Automatic selective control or transfer relay
84	Operating mechanism
85	Carrier pilot-wire receiver relay
86	Lock-out relay
87	Differential protective relay
88	Auxiliary motor or motor generator
89	Disconnecting switch
90	Regulating device
91	Voltage directional relay
92	Voltage and power direction relay
93	Field-changing contactor
94	Anti-pumping relay
95	Supervision relay
96, 97	Used for specific applications where other symbols are not suitable
98	Fuse failure relay
99	Motor protection relay
Y	Auxiliary relay for Y

Based on ANSI/IEEE C 37.2

Further reading

Bimbhra, P.S., *Generalised Theory of Electrical Machines*, Khanna Publications, India.

Siemens Electrical Engineering Handbook, Siemens AG, Munich, and Heyden and Sons Ltd, London, UK (for general information).

PART III

Voltage Surges, Overvoltages and Grounding Practices

17

Voltage Surges–Causes, Effects and Remedies

Contents

17.1 Introduction

Voltage surges are generally a phenomenon of high voltage (HV) power systems and can be considered as the most severe pollutant to the insulation of the power system and the terminal equipment. In this chapter we analyse the likely amplitude and steepness of surges that may arise under different system conditions and the most appropriate insulation coor-dination between the equipment connected on the same system. Insulation coordination provides a criterion in selecting the right equipment with a more economical insulation level for different applications and locations. Generally, locations away from the source of voltage surges, i.e. equipment installed in the downstream of a power system is subject to diminishing surge effects. For example, a rotating machine, which may be a motor or a generator, would rarely be subject to a direct lightning strike as it would seldom be connected on a bus exposed to direct strikes. It is usually connected through a bus or a cable which is fed through a transformer. All these interconnecting devices would withstand most of the effects of a lightning strike and it would be only somewhat attenuated and dampened surge to which the terminal equipment would be subject.

This concept of diminishing value of voltage surges is a logical parameter to economize on the cost of insulation as far as permissible, without jeopardising the adequacy of protection to the system or the associated equipment. Different equipment installed at different locations on the same power system may thus have varying degree of basic insulation level (BIL), as discussed in Section 18.3. One may notice the variation in BIL from Tables 11.6, 13.2, or 14.1, and 32.1(A), for motors, switchgears and bus systems respectively when installed in the same power system. Similar variations would apply for other equipment connected on the same system. The aim here is to cover the subject as widely as necessary for a proper understanding without going into extensive details.

The type of a surge is identified by its shape, and its severity by its amplitude (V_t) and time (t_1) to reach this amplitude. All overvoltages discussed are termed surges, since their severity would last only for a few microseconds (μs). In our discussions here and elsewhere in this book, we classify the overvoltages into two categories for easy identification. One is the temporary or dynamic overvoltages discussed in Chapters 20 and 24 existing in the system for a slightly longer duration say, one half of a cycle to two to three cycles at the power frequency (50 or 60 Hz), and the other as voltage surges, appearing for just for a few μs, at transient frequencies of a few kHz.

17.2 Temporary overvoltages

These are of a relatively longer duration, and may have several successive peaks, lasting from one-half of a cycle to a few cycles at the power frequency, depending upon the time constant ($\propto R/X_L$) of the circuit that gives rise to such overvoltages. The likely causes of such overvoltages are discussed in Chapters 20 and 24. It has, however, been felt necessary to give a brief review of the same for greater clarity of the present topic:

- Ground fault (Section 20.1)
- Sudden change of load (Section 24.6.2(ii))
- Resonance and ferro-resonance effects (Sections 20.2.1(2) and 24.4.1 and 24.4.2)).

17.2.1 Ground fault

High overvoltages occur in the healthy phases on a ground fault:

- When the system is grounded through an arc suppression coil and is undercompensated whereas the arcing grounds give rise to voltage surges.
- When the system has an isolated neutral.
- When the system is solidly grounded.

For more details on grounding systems and the extent of overvoltages refer to Chapter 20.

17.2.2 Sudden change of load

This is more pronounced on high-voltage and extra-high-voltage systems (66 kV and above) when:

- Carrying large powers and where there may be wide variations in the load demand
- Load rejection: The load side interrupter, feeding a large load at the far end, trips
- The load demand falls sharply as a result of substantial load rejection, when the generator feeding the system is suddenly underloaded and tends to overspeed, raising its terminal voltage. While the field control system and the turbine governor will act immediately to regulate the system, the time to normalize the situation may be a few seconds, hence the necessity to protect the system against such overvoltages.

17.2.3 Resonance and ferro-resonance effects

Such a phenomenon may occur when a circuit comprising a capacitance *C* and inductance *L* is switched ON or OFF and when such circuit parameters undergo a change during normal operation, as a result of a sudden change in load. A power circuit will invariably possess such parameters. For example, leakage capacitances between phase to phase or phase to ground are present in a cable or a conductor and these would rise when series capacitor banks are connected on the same system, say, to improve the system regulation. Similarly, leakage inductance is also present in a cable or a conductor and that will also rise when a transformer or a shunt reactor, having non-linear magnetizing characteristics (Figures 27.2b_1 and b_2) is also connected on the same system. According to the field data on this phenomenon it has been observed that it is more pronounced on HV and EHV systems (66 kV and above) particularly under the following conditions:

1 When switching a lightly loaded circuit, having a transformer, and the natural frequency of the linear part of the system corresponds to one of the harmonics of the magnetizing current.

2. When the systems that are series compensated are connected to a lightly loaded transformer or shunt reactor, under certain line conditions (Section 24.4).
3. When harmonic filter circuits are connected to a power system with saturated reactors (Figure 27.2(c)) resonance may occur between the reactor and the filter capacitors to give rise to overvoltages.
4. Resonance may also occur between the line inductance, series reactors and shunt capacitors.
5. Resonance may also occur between the line capacitance or the ground capacitance and the inductance of a series-connected limiting reactor, or the inductance of a transformer, connected on the system.

17.3 Voltage surge or a transient

The occurrence of a surge or a transient is not intentional, unlike an impulse, as noted later and may appear on an HV and EHV system as a result of system disturbances, such as during:

- A lightning strike (Figure 17.1)
- A switching operation*
- Contact bouncing or
- A fast bus transfer*
- Because of a surge transference from higher voltage to the lower voltage side of a power transformer, and
- During faults such as during a ground fault in a resonant grounded system or an isolated neutral grounded system.

These surges are of very short duration and may be defined by the following two parameters:

1. Prospective amplitude, V_t (Figure 17.4), to define the insulation endurance of the current-carrying system. Only the first highest peak is of significance for this purpose, which will contain the maximum severity. The subsequent peaks are of moderate magnitudes and of little consequence for the system or the terminal equipment.
2. Time of rise, t_1, as illustrated in Figure 17.3. Depending upon the time of rise, a surge may be classified into three groups:
   - Switching surges
   - Lightning surges and
   - Very steep or front of wave (FOW) surges.

17.3.1 Switching surges

These are slow rising surges and have a front time of more than 10 μs. They are considered as long-duration surges due to their high total effective duration t_2 (Figure 17.2(b)). But they discharge very high energy, even during their short duration, and may deteriorate or damage the insulating properties of the system or the equipment that is subject to such a surge and has to absorb its severity. For the purpose of energy discharge by a surge, the amplitude and duration of these surges alone is considered (Section 18.6.3). The duration of such surges are the maximum of the other two types of surges.

17.3.2 Lightning surges

These are fast rising and may have a front time of almost 1 μs or even less (Figure 17.2(a)). They are therefore considered short-duration surges.

17.3.3 Very steep or front of wave (FOW) surges

These are very fast rising and of very short duration and may have a front time as short as 0.1 μs or less (IEC 60071-1). As a result, while their energy discharge may be too small to be of any significance, their rate of rise is very rapid. This makes them capable of damaging a small part of the current-carrying conductor of the terminal equipment, rendering it highly vulnerable to an insulation failure. Sometimes a restrike of the interrupting contacts, or a quick re-closing of a power system, may also cause such surges. The situation may become worse:

- When interrupting small reactive currents, such as during the opening of an unloaded power line, an unloaded transformer or a motor running at no load. In all such cases it may cause current chopping, leading to extremely steep switching surges (Section 19.6) or
- When the system already had a trapped charge before a reclosure.

All electrical equipment are designed for a specific BIL, as indicated in Tables 11.6, 13.2, 14.1, and 32.1(A) for motors, switchgears and bus systems respectively, and Tables 13.2 and 13.3 for the main power system (line clearances and insulators). If the actual severity of a prospective surge, i.e. its amplitude and/or rise time or both, is expected to be higher than these levels (higher amplitude and lower rise time) the same must be damped to a safe level, with the use of surge arresters, surge capacitors or both as discussed later.

17.4 Transient stability of overhead lines

17.4.1 Auto-reclosing scheme

Auto-reclosing of a power system, normally overhead lines, after a transitory fault is a type of protective closing and network automation to avoid a supply interruption as such faults and to improve the system's transient stability limit. A transient stability limit refers to the maximum power that the system (all the generators feeding the network) can deliver without loss of synchronism. Such transitory faults may be due to system disturbances as discussed earlier, such as sudden switching of loads ON or OFF causing severe power fluctuations, lightning strikes, or passing objects like birds, gales and storms hitting the overhead lines. In most cases, such disturbances

---

*A direct on-line switching is a single transient condition, whereas a quick bus transfer is OFF and ON, i.e. a double transient condition, hence more severe.

are of a momentary nature. Field studies have revealed that such causes contribute nearly 90% of the total tripping. During such faults, the interrupters at both ends of a transmission line may trip as a result of travelling surges in both directions. An auto-reclosing scheme, which may be applied to an overhead transmission or a long HT distribution system, can reclose the interrupter on such a trip in about 10–15 cycles and maintain the supply system intact, preventing loss of synchronism. Thus it helps to achieve a high degree of system stability.

Since the fault is of a transitory nature, the scheme may be applied even on a per-pole basis, allowing the healthy phases to remain intact and the reclosing necessitated only in the affected phase rather than all the phases, thus further enhancing the system's transient stability. However, it would require an independent interrupting mechanism and individual relaying and tripping schemes for each pole.

It is possible that the breaker may trip on the first reclosing after a fault, as the fault may not have cleared. In such cases a delayed reclosing, with a delay of one second or so, may also be incorporated into the same switching scheme to supplement the fast reclosing, to save the system from a saving and a consequent trip. By then the fault would clear in all probability to allow the breaker to reclose thus maintaining the continuity of supply once again and saving the system from falling out of synchronism and a tandem trip of all the feeding lines of a power grid. If the fault persists and the breaker trips again, the breaker will lock out and will not close again until the fault is removed and the breaker is reset.

Delayed reclosing may be adopted where the system has large interconnections (mesh system) as at a power grid, and where loss of one phase may not cause a loss of synchronization in such a duration and hence restore the transient stability of the whole system.

17.5 Causes of voltage surges

In actual operation, disturbances on a power system, causing sudden changes in the system parameters, are quite frequent and may generate temporary overvoltages and voltage surges, as summarized above. The system disturbances may be of two types, external or internal, as explained below.

17.5.1 External causes

These are mainly due to atmospheric disturbances as noted below. The effect of such surges is totally different from that of switching surges, and the amplitude is independent of the system voltage.

Lightning strike

There is no clear explanation of lightning. However, the most popular theory is the charging of clouds at high voltages, up to 20 million volts and a charging current 5–100 kA or so, due to the movement of hot air upwards and big droplets of water downwards. This process tends to make the tops of the clouds positive and the bottom negative, which creates a voltage gradient between the clouds or between the clouds and the earth. The voltage gradient may exceed the breakdown value of the air and cause a flashover. This flashover is similar to an electrostatic discharge of the atmosphere to the ground, as illustrated in Figure 17.1, and is termed a lightning strike. There may be up to 20 pulses in each lightning strike, each having a duration of about 50 μs. The phenomenon is comparable to the discharge of a highly charged condenser, the clouds forming one plate, ground the other and the air as the dielectric.

Electrostatically induced charges

- Due to the presence of thunder clouds in the vicinity: A charged cloud above and near a large object, an overhead line for instance, induces a charge of opposite polarity than its own in the line. When this cloud bursts suddenly and discharges, its induced electrostatic charge travels in both directions of the line, with a near velocity of light and equalizes the potential at all points. The potential at any point along the line rises suddenly from its normal value to the amplitude (V_t) of the travelling wave.
- Due to the friction of dust or free snow blowing past the conductors.

Electromagnetically induced currents

Due to lightning in the vicinity of the overhead lines. It is an indirect effect of a lightning strike. The lightning surges may impose very severe stresses on the line and cause damage to the line insulators and the terminal equipment without causing a trip by the protective device. These surges can be contained at the receiving end with the use of a surge arrester or a diverter (discussed later).

17.5.2 Internal causes

Making or breaking a power circuit causes a change in

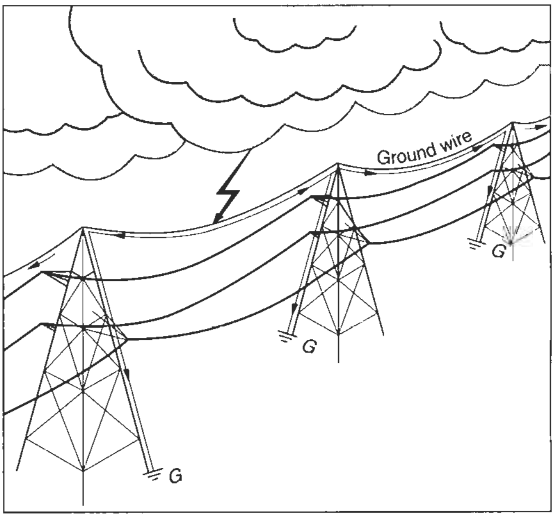

Figure 17.1 Discharge from clouds

the circuit parameters and produces voltage surges. Those arising out of switching operations are attributed to internal causes. In this chapter we limit our discussions to the phenomenon of voltage surges, as related to internal causes and particularly as a result of switching. The requirement and the type of protection remain the same for external or internal causes of system disturbances.

17.6 Definitions

In the following text we will use a few new terms. For the sake of more clarity on the subject these are defined as follows.

17.6.1 An impulse

An impulse is an intentionally applied voltage or current in a laboratory. It is in the form of an aperiodic and unidirectional waveform (Figure 17.2). It rises rapidly without appreciable oscillations to a maximum value and then falls, usually less rapidly, to zero, with small, if any, loops of opposite polarity (Figure 17.4). The parameters which define a voltage or a current impulse are its polarity, peak value, rate of rise (front time) and time to half its value on the tail, as noted later.

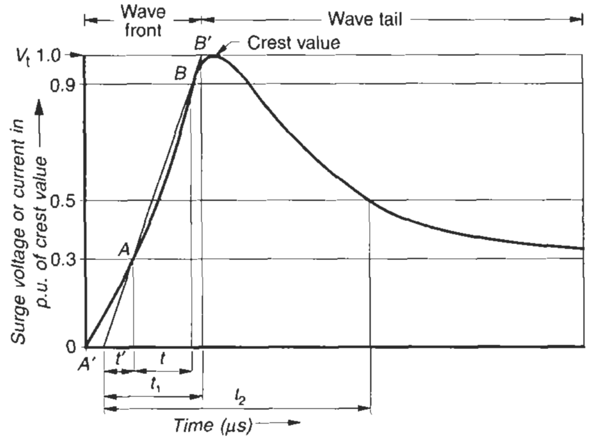

t_1 = Virtual front time
= 1.67t
t' = 0.3t_1 = 0.5t

Figure 17.3 Defining a voltage or a current impulse waveform

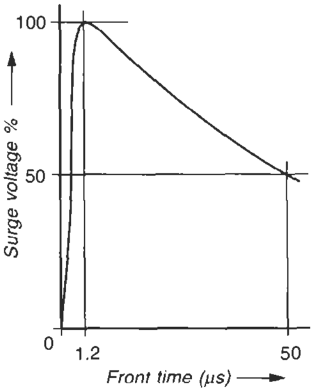

A 1.2/50 µs waveform

(a) Lightning impulse waveform

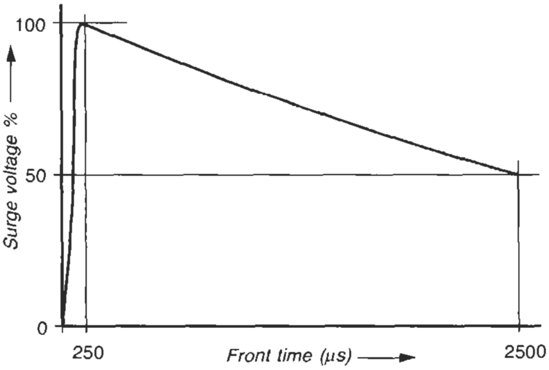

A 250/2500 µs waveform

(b) Switching impulse waveform

Figure 17.2 Standard impulse waveforms

A transient of an external or internal nature, as discussed above, is then related to one such type of impulse, for laboratory testing a particular equipment or system, to establish its suitability.

Identifying an impulse waveform

The distinction between a lightning impulse and a switching impulse may be made on the basis of the duration of the wave front (shape), rather than of its origin. A voltage impulse with a wave front duration of less than 1 µs, up to some tens of µs, is generally considered as a lightning impulse (Figure 17.2(a)) whereas an impulse with a front duration of some tens of thousands of µs is a switching impulse (Figure 17.2(b)) according to IEC 60060-1. The type of wave is generally designated as t_1/t_2 (Figure 17.3), where

1 t_1 = virtual front time of an impulse:
   - For a voltage impulse having a front duration of less than 30 µs (normally lightning surges)
     t_1 = 1.67 × time taken by the impulse to rise from 30% of its peak value to 90%
   - For a voltage impulse having a front duration of more than 30 µs (normally switching surges)
     t_1 = 1.05 × time taken by the impulse to rise from 0% to 95% of its peak value

     For the sake of laboratory testing and analytical studies, these surges have been represented by standard impulse waveforms. According to IEC 60060-1 a 1.2/50 µs impulse is called a standard lightning impulse, and a 250/2500 µs impulse a standard switching impulse.
   - For equivalent current impulses, such as 8/20 µs

for a 1.2/50 μs voltage surge and 30/60 μs for a 250/2500 μs voltage surge

t_1 = 1.25 × time taken by the current to increase from 10% to 90% of its peak value.

2 t_2 = time interval between the origin and the instant at which the impulse has decreased to half of its peak value.

17.6.2 Transient recovery voltage (TRV) and its rate of rise (r.r.r.v.) in an induction motor

This is an important parameter. A very fast-rising transient can cause the surge voltage to be non-uniformly distributed over the entire length of the motor windings and affects the first or the entrance coil of the motor windings, as discussed in more detail in Section 17.8. This is the voltage (V_t) that will reappear immediately on a current interruption (current zero) (Figure 17.4) and cause a current across the parting contacts yet again, known as post-arc current. It oscillates at a very high surge frequency f_s and is composed of a number of surge frequencies, as the leakage inductance L and the lumped capacitance C of the interrupting circuit undergo rapid changes with the propagation of the surge wave. The surge frequency is a function of circuit constants L and C (equation (17.1)). Figure 17.4 drawn for one particular frequency, is only an illustration.

The severity of the recovery voltage of a surge is defined by its r.r.r.v., which is a function of its amplitude, V_t, and the front time t_1 (Figure 17.4), t_1 in turn being a function of the surge frequency f_s. The higher the surge frequency, the shorter will be the front time t_1. The shorter the time t_1, the higher will be the rate of rise and the steeper will be the recovery voltage and the more severe will be its effects on the terminal equipment.

Referring to Figure 17.4, if V_t is the peak value of the voltage surge of a particular transient voltage waveform in kV and t_1, the virtual front time or the time of rise of the transient voltage from its zero to peak value in μs, then the rate of rise of recovery or restriking voltage,

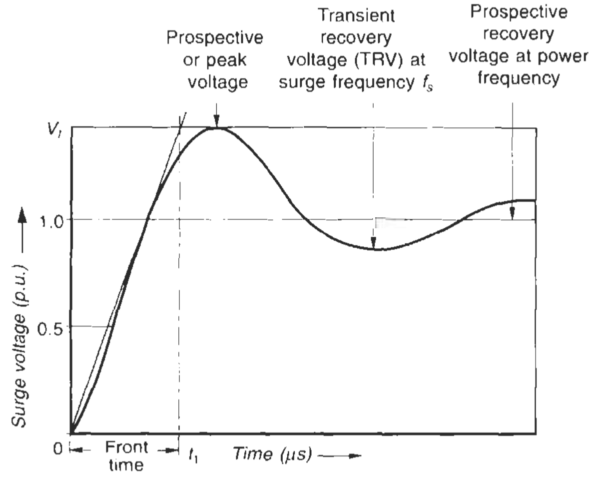

Figure 17.4 A transient recovery voltage ('TRV')

$$\text{r.r.r.v.} = \frac{V_t}{t_1}\ \text{kV}/\mu\text{s}$$

The significance of this term can be realized by the fact that the voltage stress of a surge, having a maximum amplitude of 4.5 p.u., with a front time t_1 of 5 μs, will roughly be the same or even less severe compared to a surge with an amplitude of only 2 p.u. and a front time of 0.2 μs (see Insulation Sub-committee, Rotating Machinery Committee, 1981).

When a fault occurs near the source of supply, the line lumped leakage capacitance C is small and the frequency of oscillations high, of the order of a few kHz (equation (17.1)). But when the fault occurs at a distance from the source, C tends to become higher and the frequency of oscillations lower, of the order of a few hundred Hz. An introduction of some resistance in the interrupting circuit will tend to dampen (attenuate) the oscillations but where $R > 2\sqrt{L/C}$, (ϕ of $\cos\phi > 45°$), the system will remain oscillatory. R may be introduced in the circuit through interconnecting cables, interrupting devices and overhead lines etc., and thus reduce the severity of transients during an arc interruption. If some R is introduced such that $R > 2\sqrt{L/C}$, (ϕ of $\cos\phi < 45°$) then the high-frequency oscillations can be totally dampened.

This practice is usually adopted in oil circuit breakers (BOCBs and MOCBs). In air blast circuit breakers (ABCBs), and SF_6 circuit breakers, a resistance is connected in shunt across the contact gap, such that R is introduced in the circuit during the making and interrupting processes only.

17.6.3 Surge frequency

This is the frequency at which the surges travel. This frequency can be very high, of the order of 5–100 kHz or more, depending upon the circuit parameters. The natural frequency of oscillations of the transient recovery voltage of the circuit in terms of circuit parameters can be expressed as:

$$f_s = \frac{1}{2\pi\sqrt{LC}}\ \text{in Hz} \tag{17.1}$$

where

f_s = surge frequency in Hz

L = leakage inductance of the circuit in henry (H) and

C = lumped leakage capacitance of the circuit in farad (F) (L and C being the circuit parameters).

Refer to a typical oscillogram of a switching surge shown in Figure 17.5. Such a surge may exist on the system only until the interrupter is conducting, i.e. up to its contact making or contact opening, whatever the process of switching. It may be for only one half of a cycle to two cycles respectively (10–40 ms for a 50 Hz system) in terms of normal frequency f of the system but many times more than this, in terms of surge high oscillating frequency f_s. The product of L and C will vary with a change in the circuit parameters. For instance, when a transient wave travels through a power system, having a number of equipment and devices connected to it such as a switching device to a cable, a cable to an overhead line or a transformer and an induction motor etc, then the frequency of oscillations will continue to alter after every junction. At each junction the travelling wave will encounter a wave reflection and add more impedance in its circuit, as it will propagate ahead. After every reflection, the circuit parameters will change as will the frequency of oscillations. Thus, a number of oscillatory frequencies may exist in the system at a time, leading to a more complex phenomenon and making it difficult to accurately determine the effective surge frequency of the system and the r.r.r.v. By the use of oscillograms such as that shown in Figure 17.5, it is possible to determine such complex quantities.

The higher the frequency of the transient recovery voltage (TRV), the steeper will be the slope of the TRV (Figure 17.6), i.e. the higher will be the r.r.r.v. The r.r.r.v. is a measure of severity of the TRV that the terminal equipment and the devices may have to endure.

17.6.4 Surge impedance

The shape and characteristics of a surge wave are influenced by the circuit parameters, i.e. the leakage inductance L of the interconnecting cables and the current-carrying components of the equipment through which it travels and the leakage capacitance C of such cables and the motor dielectric lumped capacitance etc. (Section 9.6.1). The relation between L and C that will determine the shape of the travelling wave is known as the surge or natural impedance Z_s of the system and is expressed as:

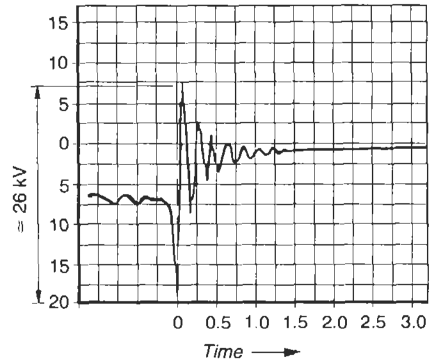

(a) Without surge arrester maximum peak to peak voltage ≈ 26 kV

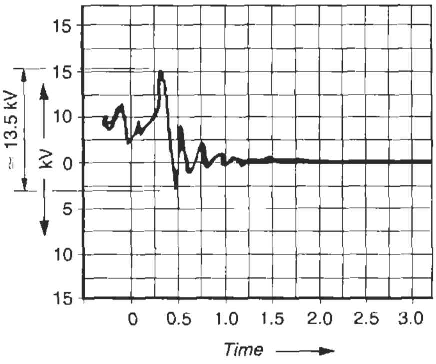

(b) With surge arrester maximum peak to peak voltage ≈ 13.5 kV

Figure 17.5 Oscillograms showing the effectiveness of a surge arrester on a 6.6 kV motor

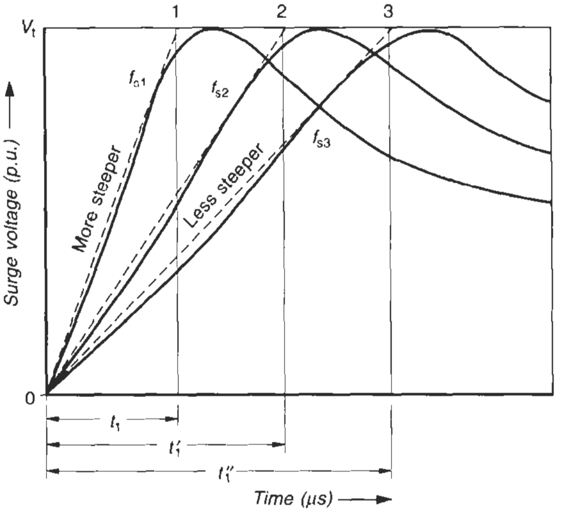

For same peak voltage 'V_t'

$t_1 < t_1' < t_1''$ and

$f_{s1} > f_{s2} > f_{s3}$

and r.r.r.v = $\frac{V_t}{t_1} > \frac{V_t}{t_1'} > \frac{V_t}{t_1''}$

Figure 17.6 The variation of r.r.r.v. with the front time ($t_1 \propto \frac{1}{f_s}$)

$$Z_S = \sqrt{\frac{L}{C}}\ \Omega \qquad (17.2)$$

where

L = circuit leakage inductance in henry (H), and

C = circuit lumped leakage capacitance in farad (F).

Influence of surge impedance on terminal equipment

These values (L and C) help to determine the likely surge voltages that may develop during a switching operation while using different interrupting devices. For accurate analysis, it is advisable to obtain these values from their manufacturers. Slamecka (1980) and others have also established such curves and have provided them in the form of nomograms for easy identification of this parameter, as reproduced in Figures 17.7(a) and (b). The surge impedance Z_s varies with variations in the design parameters, hence from manufacturer to manufacturer. These curves have therefore been provided in the form of bands. To account for likely variations in the design parameters by the different manufacturers one can, at best, obtain an average value of the surge impedance from these curves for a particular machine, as illustrated for a 500 h.p. (≈ 500 kVA) motor. But for an accurate value, it must be obtained from the machine manufacturer alone, as shown in Figure 17.7(c), for curves produced by Siemens for their motors.

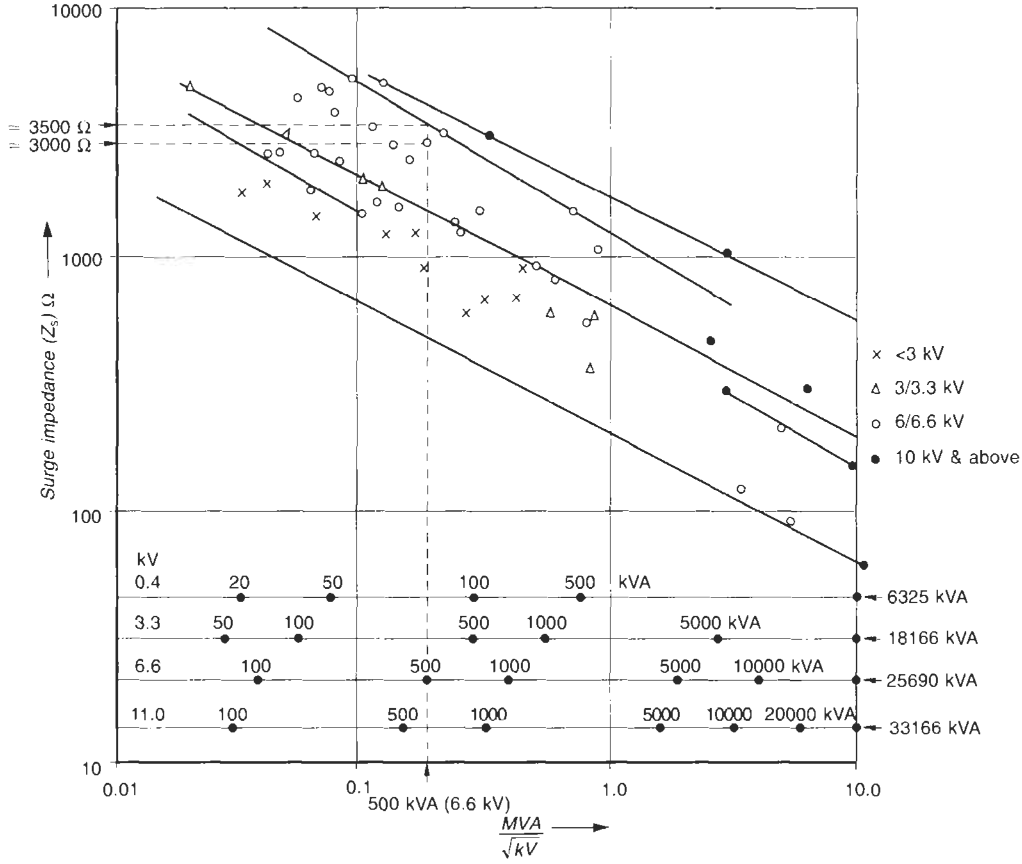

Figure 17.7(a) Surge impedance of rotating machines as a function of input $\text{MVA}/\sqrt{\text{Line kV}}$ (from Pretorious and Eriksson, 1982)

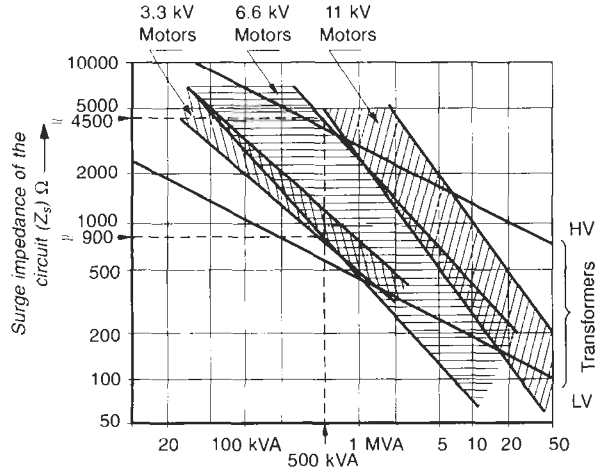

Figure 17.7(b) Typical value rating of equipment of surge impedances for HT motors and transformers

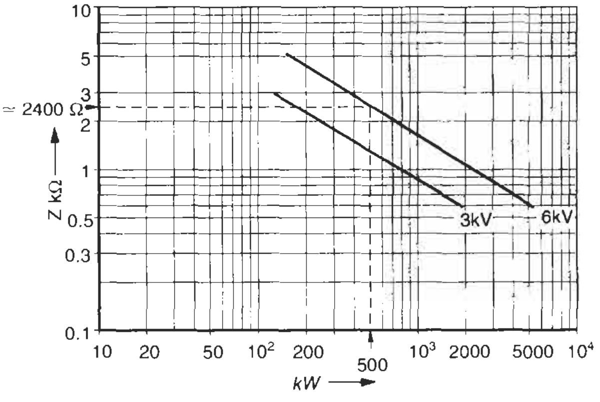

Figure 17.7 (c) Surge impedance of HT motors as a function of output power

The magnitude of the TRV, which is the product of $Z_s \times I_c(I_c$ being the current chopped), can be determined with the help of curves shown in Figure 17.8. These curves have been established with the help of the curves in Figures 17.7(a) and (b) and the values of I_c, assumed for various types of interrupters. The curves in Figures

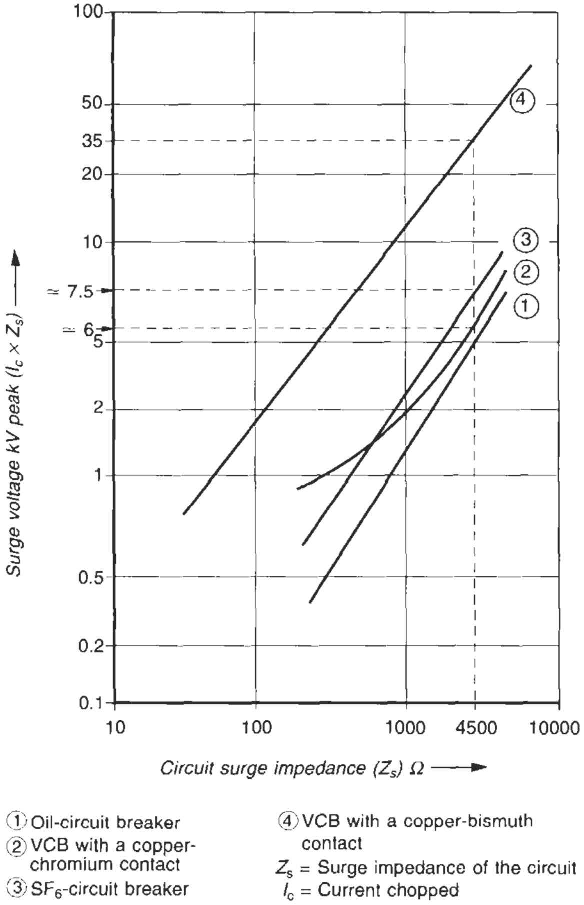

Figure 17.8 Likely surge voltages that may be developed by different types of circuit breakers as a function of circuit surge impedance

17.7(a) and (b) reveal, that for larger ratings of machines, the surge impedance will tend to diminish, while for smaller ratings it will tend to rise. The curves in Figure 17.8 will thus reveal, that while a lower value of Z_s will tend to dampen the transients, the higher values will tend to enlarge, as corroborated in Section 18.5.1 (reflection of waves). Smaller machines are, therefore, subject to higher TRVs compared to larger ones.

Power cables connecting various equipment on a power system can be considered as lumped capacitances and can help in the natural dampening of the amplitude (V_t) of the prospective surges, besides reducing their steepness (V_t/t_1) (Figure 17.6). Typical values of surge impedances for cables may be considered around 35–60 Ω, but the cable length has to be a safe one. Longer cable may raise the V_t beyond the BIL of the machine, as discussed in Section 18.6.2.

17.6.5 Surge energy

When these surges strike a power system or equipment, they release very high energy, which the system and the terminal equipment should be able to absorb. This can be determined by a simple equation:

$$W = \frac{V_t^2}{Z_s} \times t \times 10^3 \text{ kW-s or kJ (1 W = 1 j/s)} \qquad (17.3)$$

where

W = energy released in kW-s or kJ

V_t = prospective crest of the surge in kV

Z_s = surge impedance of the power system and the terminal equipment in Ω

t = duration for which the surge will exist (in seconds).

Accordingly the energy released by a switching surge is usually many times greater than a lightning strike or a front of wave (FOW) surge, since t_2 (switching) >> t_2 (lightning) > t_2 (FOW).

Subsequent examples will illustrate the amount of such energies and the means to dissipate them safely.

17.6.6 Velocity of propagation

The velocity of current or voltage waves in any medium is called the velocity of propagation of electricity in that medium. The velocity of electromagnetic waves (electricity) through a conductor is a measure of line or conductor parameters through which it propagates and is represented by

$$U = \frac{1}{\sqrt{L_0 C_0}} \text{ km/s} \qquad (17.4)$$

where

U = velocity of propagation in km/s and is free from the frequency of the travelling wave

L_0 = line or conductor mutual inductance in H/km, through which it travels. This will depend upon the quantum of skin effect and the mutual induction between two or more adjacent current-carrying conductors. In overhead lines, it is very low due to wide spacing, while it may be very high for a cable, as noted later.

C_0 = leakage capacitance in F/km.

The system parameters will vary with voltage. With a rise in voltage, the leakage capacitance C will rise and mutual inductance L will fall due to larger clearances between the conductors, and hence, less induction in the adjacent conductors. The product of LC will remain almost the same for similar types of systems, and hence the velocity of propagation in one type of system. For instance, the velocity of propagation in an overhead line, even for different system voltages, will almost universally be in the same range. This is evident from the typical line parameters in Table 24.1(b), where the product of L and C is almost of the same order. It may, however, differ with the velocity in a cable. In a cable, the conductors are placed in close proximity to each other and are transposed (twisted) to nullify the effect of proximity. Also the cable may have a metallic sheathing and hence, provide an electrically symmetrical current-carrying system. Cables possess a very low mutual inductance (L) and a very high leakage capacitance (C).

The product of L and C in cables is very high and so the velocity of propagation very low. For a 33 kV, 3 × 300 mm^2 XLPE cable, for instance, taking parameters from Table A16.15 Appendix 1 of Chapter 16

$$X_L = 0.115\ \Omega\text{ /km at 50 Hz}$$

or $$L = \frac{0.115}{2\pi f} = 0.336 \times 10^{-3}\ \text{H/km}$$

and $$C = 0.23\ \mu\ \text{F/km}$$

$$\therefore\quad U = \frac{1}{\sqrt{0.366 \times 10^{-3} \times 0.23 \times 10^{-6}}}\ \text{km/s}$$

$$= 1.09 \times 10^5\ \text{km/s or } 109\ \text{m}/\mu\text{s}$$

and for a 3.3 kV, 3c × 95 mm^2 PVC cable from Table A16.5

$$X_L = 0.088\ \Omega\text{/km at 50 Hz}$$

$$\therefore\quad L = \frac{0.088}{2\pi f} = 0.28 \times 10^{-3}\ \text{H/km}$$

and $$C = 0.715 \times 10^{-6}\ \mu\text{F/km}$$

$$\therefore\quad U = \frac{1}{\sqrt{0.28 \times 10^{-3} \times 0.715 \times 10^{-6}}}$$

$$= 0.706 \times 10^5\ \text{km/s or } 70.6\ \text{m}/\mu\text{s}.$$

Similarly, consider an overhead line having the following parameters:

System voltage = 220 kV
Frequency = 50 Hz

$$X_L = 8.249 \times 10^{-4}\ \Omega\text{/km}$$

and B or $$\frac{1}{X_c} = 1.42 \times 10^{-3}\ \Omega\text{/km}$$

$$\therefore\quad L = \frac{8.249 \times 10^{-4}}{2\pi f} = 2.63 \times 10^{-6}\ \text{H/km}$$

and $$C = \frac{1.42 \times 10^{-3}}{2\pi f} = 0.45 \times 10^{-5}\ \text{F/km}$$

$$\therefore\quad U = \frac{1}{\sqrt{2.63 \times 10^{-6} \times 0.45 \times 10^{-5}}}$$

$$= 2.907 \times 10^5\ \text{km/s}$$

(Also refer to Table 24.1(b). The variation in line parameters considered here and produced in Table 24.1(b) may be due to change in line configuration and spacings.)

This is almost equal to the speed of light in free space and is true for straight conductors without any joints or discontinuities.

The velocity of propagation in a cable is much less than in an overhead line, as noted above. The frequency (f) of the electromagnetic waves at which they propagate has no bearing on the speed of propagation. The lightning surges, which propagate at very high frequency (consider a 1.2/50 μs wave, where 1.2 μs means the duration of one quarter of a cycle, the frequency of this wave in free space will be = 1/4 × 1/(1.2 × 10^{-6}) = 208 kHz), will also have a velocity of propagation equal to light, i.e. 3 × 10^5 km/s (186 000 miles/s) or 300 m/μs. In motor windings it may be much less, due to discontinuities and a yet higher product of LC. For the purpose of deriving inferences of the influence of such waves on the performance of certain equipment, such as an electric motor, susceptible to such waves, the typical values for a 3.3 kV or 6.6 kV motor may be considered around 15–20 m/μs in slots and 150–200 m/μs in windings outside the slots.

17.6.7 Per unit voltage (p.u.)

The general practice to express an overvoltage is in p.u. This abbreviation will be used frequently in our discussions. One p.u. is the maximum voltage between the phase and the neutral, i.e.

$$1\ \text{p.u.} = \sqrt{2} \cdot \frac{V_1}{\sqrt{3}} \qquad (17.5)$$

17.6.8 Current zero

In an alternating current system the voltage and current components travel in the shape of a sinusoidal waveform (Figure 17.9) and oscillate through their natural zeros, 100 times a second for a 50 Hz system.

The instant at which the power frequency current will pass through its natural zero, i.e. where $i = 0$, is termed its natural current zero (or current zero), where

$$i = I_{\max} \sin \omega t \qquad (17.6)$$

and

i = Instantaneous current component at any instant
I = r.m.s. value of the current
$I_{\max}$ = peak value of the current
ω = angular velocity = 2 πf
t = time

Note
The term 'natural' is used to differentiate a power frequency current wave from an oscillating or transient high-frequency current wave.

17.6.9 Arc time constant

This is the time required by the quenching medium of an interrupting device to regain its original dielectric strength after the final current zero.

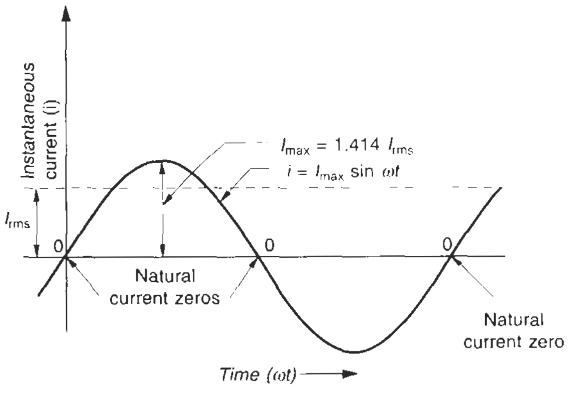

Figure 17.9 Representation of a sinusoidal current waveform

17.7 Causes of steep-rising surges

17.7.1 Arc re-ignition or restrikes

This may occur between the parting contacts of an interrupting device while interrupting a low-power factor (p.f.) current. It is the re-ignition of the arc plasma between the parting contacts of the interrupting device. It may reappear after a natural current zero, due to a high TRV, which the dielectric medium between the contact gap may not be able to withstand and break down. Figure 19.3 illustrates the theory of ionization and de-ionization of arc plasma. The same is true during a closing sequence when the contact gap, just before closing, falls short of the dielectric strength of the medium in which it is making, and breaks down. It is commonly termed as the restrike of the arc. This does not mean that the contacts that are parting will close again but the interrupting circuit, that will close momentarily, through re-ignition of the arc plasma, until the next natural current zero, or until contacts are made during a closing sequence.

This may better be understood with the help of Figure 17.10, when the making contacts begin to separate. The arc plasma becomes de-ionized by the immediate next current zero. At this current zero a recovery voltage across the parting contacts will appear the magnitude of which will depend upon the p.f. of the circuit and the instant at which the interruption occurs on the voltage wave, as illustrated in Figure 17.11, through curves (a) to (d). The higher the p.f. of the interrupting circuit (i.e. under healthy conditions), the closer the system voltage and current phasors will be. This will cause the recovery voltage to be of a moderate magnitude (zero voltage at unity p.f. curve (a)) causing no re-ignition of the arc plasma and the circuit will interrupt. At lower p.f.s, however, such as during starting conditions of a motor or a transformer, or on fault, the recovery voltage at a current zero will be very high (curves (c) and (d)) and it may be enough to break down the dielectric medium between the parting contacts if they are still close to each other. This will cause a re-ignition of the arc plasma that had de-ionized immediately before current zero. The arc will thus remain ionized and will temporarily make the electrical contacts until the next natural current zero. The TRV, now higher than before due to reflections, will try to break down the dielectric strength between the parting contacts if these fell short of the required level of the impressed TRV. This will establish an arc yet again, while the contacts have travelled farther apart. The process of such arc re-strikes is termed multiple re-ignitions or more commonly multiple restrikes. They continue until the arc plasma is finally extinguished and the breaker has fully interrupted. It may be noted that the moving contact of an interrupting device is spring loaded and on a trip command tries to part with some force from the fixed contact. It will continue to move away until it reaches its far end and interrupt the contacts fully. Irrespective of the dielectric strength of the arc chamber and amplitude of the TRV, the situation will attenuate at a stage when the contact gap has become large enough and the TRV is unable to break the dielectric medium across the gap to cause a further restrike.

Since TRV and the dielectric strength between the parting contacts both rise gradually and rapidly (TRV after every restrike due to reflections and dielectric strength due to longer contact travel) there is almost a race between the two. Depending upon which rises faster than the other, will there be a restrike of the arc or an attenuation of the TRV. Whichever may happen faster will prevail until the next current zero at least, and until a full attenuation of the situation or circuit interruption is reached. The theory of arc re-ignition is, therefore, also termed the dielectric race theory. Figure 17.10 roughly illustrates this phenomenon. The actual waveforms will be much more complex being of a transient nature and can be obtained through oscillograms.

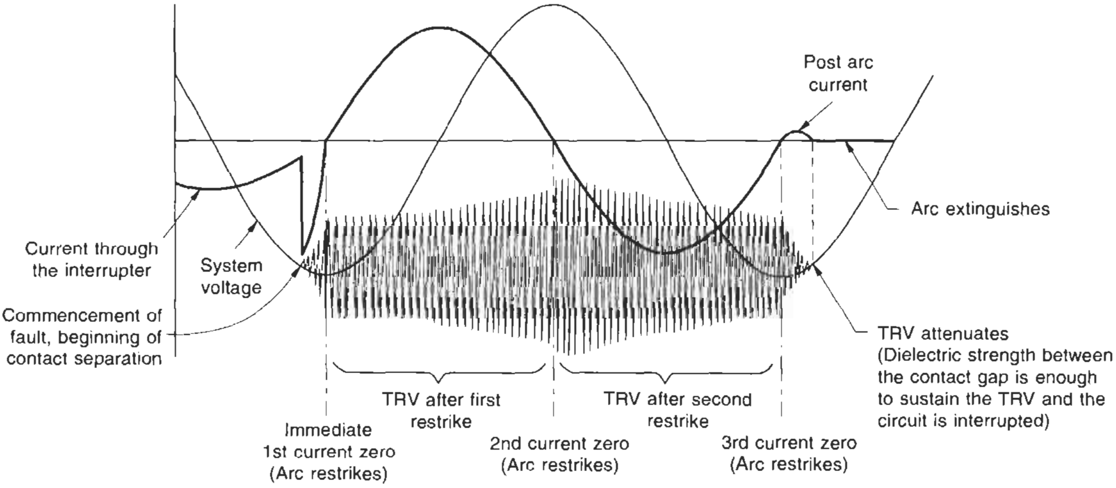

Figure 17.10 Approximate representation of arc re-ignition during a fault-interrupting process

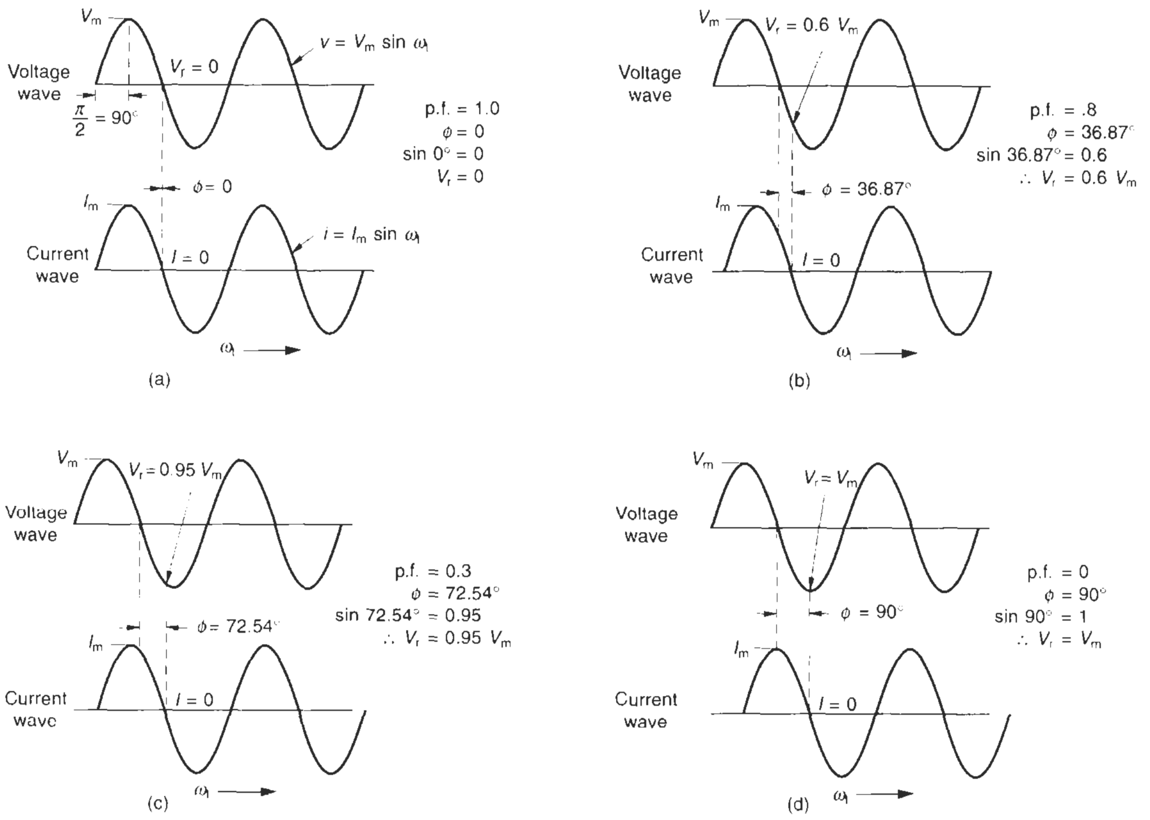

(a) (b)

(c) (d)

Figure 17.11 Amplitude of recovery voltage at a current zero during a switching operation of an inductive circuit at different p.f.s

17.7.2 Switching surges

Switching surges in an inductive circuit

When a coil of inductance L, consisting of Z number of turns, is energized through a voltage e, the flux, ϕ, linking the inductive circuit will undergo a rapid change from one peak (+ve) to the other (–ve), within one-half of a cycle of the voltage wave (Figure 1.3), i.e.

$$e = - Z (\mathrm{d}\phi/\mathrm{dt} = - L (\mathrm{d}i/\mathrm{d}t) \qquad (17.4)$$

The negative sign indicates the direction of the e.m.f. that opposes the change in the flux and thus the current.

Referring to a normal magnetizing curve of an inductive core, it will be observed that the normal peak flux occurs near the saturation point (Figure 17.12). At the instant of switching, the flux may go up to $2\phi_m$ (Figure 1.3) and cause an excessive saturation of the magnetic core, making the induced e.m.f. rise disproportionately. Hence the phenomenon of switching surges. If the core already has some residual flux in its magnetic circuit, at the instant of switching, the surge voltage will attain yet higher values and further intensify the switching surges.

Excessive saturation of the magnetic core reduces the value of L, and raises the magnetizing current disproportionately, say up to ten times the normal value or even more, as discussed in Section 1.2.

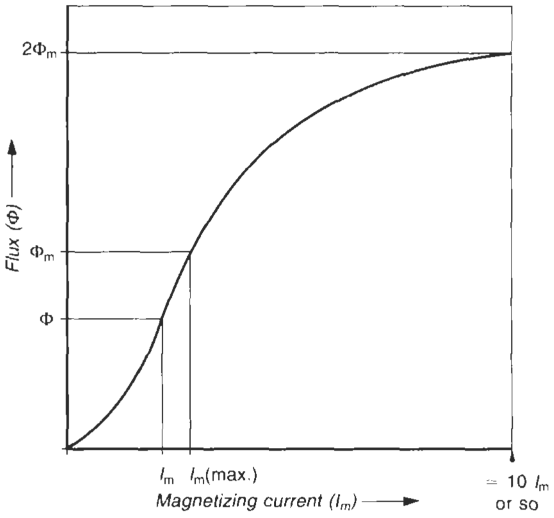

Figure 17.12 A normal magnetizing characteristic of an inductor coil

To analyse switching surges we may consider the following two possibilities:

- Surges generated during a switching ON or contact-making operation, and
- Surges generated during a switching OFF or contact-interrupting operation.

(ii) Surges generated during a switching 'ON' operation

Field data collected from various sources have revealed failure of a motor's windings, even during an energizing process. It has been shown that a motor may be subject to an overvoltage of 3–5 p.u. with a front time 't_1' as low as 1 μs or even less (signifying the steepness of the TRV) during switching ON. The phenomenon of a switching surge is thus a matter of a few microseconds only, resulting from the restrike of the transient recovery voltage (TRV) during its first few cycles only, at a very high transient frequency, in the range of 5–100 kHz.

To explain this, consider a switch being closed on a motor. The moving contacts will approach the fixed contacts of the switching device and before they close, a stage would arise when the dielectric strength of the gradually diminishing gap between the closing contacts will no longer be able to withstand the system voltage and breakdown, causing an arc between the closing contacts. Under this condition, the voltage across the gap and thus also across the motor terminals, may rise in the following way:

- By the first pre-strike of the arc gap, the TRV may reach 1 p.u., when the motor is assumed to be at a standstill without any self-induced e.m.f. before closing of the contacts.
- When this TRV of 1 p.u. reaches the motor terminals, it will experience a surge reflection and almost double, subjecting the motor windings to a stress of almost 2 p.u. (more appropriately 1.5–1.8 p.u.) as measured during actual tests (see Pretorius and Eriksson, 1982). It is less than 2, due to the circuit impedance, and provides a dampening effect (Section 18.5.1) as well as other effects, such as more than one junction of the interconnecting cables from the switching device up to the motor terminals, which will also dampen the quantum of the reflected wave.
- To make all the three poles simultaneously of a switching device during a switching ON sequence is rather impractical, whatever precision of the closing mechanism of the switching device be achieved. This is due to possible variations, even negligible ones, in the three contact travels or actual contact making. It is generally one pole of the device that will make first and then the other two poles will make. There could be a gap of a few milliseconds between the first contact making and the second. This aspect is vital when analysing the surge conditions during a switching ON.

The closing of one pole causes an oscillation in the corresponding phase of the motor winding which leads to oscillations in the other two phases that are still open. It has been seen that if the first pole prestrikes at the maximum voltage, i.e. at 1 p.u. across the making contacts, the peak voltage across the other two poles may approach a value of

0.5 p.u. + (1.5–1.8 p.u.)

or up to 2.0 to 2.3 p.u. (See Cormick and Thompson, 1982)

At this voltage when these two poles prestrike they cause a surge voltage at the motor terminals of

1.5–1.8 times the 2.0–2.3 p.u.

i.e. 1.5 × 2 p.u. or 3 p.u. to 1.8 × 2.3 p.u. or 4.14 p.u.

The above would be true if the motor is assumed to be at a standstill. If the motor had been running at almost full speed, this voltage would assume yet higher proportions, say, up to 5 p.u. due to the motor's own self-induced e.m.f., which may fall phase apart with the system voltage. Such a situation may arise during a fast bus transfer, when a running motor is switched over from one source to another or during a re-acceleration period after a momentary power failure. But since the amplitude and rate of rise of the recovery voltage (r.r.r.v.) at switching ON are influenced by the surge impedance of the closing circuit, which is formed by the surge impedance of the motor and the interconnecting cables, the time of rise, t_1 (Figure 17.6) and the amplitude of the surge voltage, V_t, would rise with the length of the cable between the switching device and the motor terminals (Section 18.6.2). Such transient voltages will exist on the system just up to the contact making and are thus of extremely short duration (in μs).

Such prestrikes before contact making are a natural phenomenon and may occur in all types of switching devices, such as an OCB, MOCB, ABCB, SF_6 or vacuum interrupters. But the severity of the prestrikes and the magnitude of the transient voltages will depend upon the medium of quenching, which will determine the contact gap, before occurs a prestrike (Figure 19.1) and its speed of closing.

Consider a vacuum interrupter having a dielectric strength of 50 kV at approximately 1.2 mm contact gap (Figure 19.1). Assuming the dielectric properties to be almost linear in this region, the contact gap, while switching a 6.0 kV motor for instance, will break down when the contacts are:

$$6 \times \frac{1.2}{50} \quad \text{or} \quad 0.144 \text{ mm apart}$$

Considering the speed of the moving contact as 0.6 m/s (typical), then the duration of prestrikes before this contact will touch the fixed contact will be

$$= \frac{0.144}{10^3} \times \frac{1}{0.6} \times 10^6 \ \mu\text{s}$$
$$= 240 \ \mu\text{s}$$

For the parameters of the motor circuit, if the frequency of the TRV is considered as 17 kHz, arising out of prestrikes, then the number of prestrikes at transient frequency before the contacts make will be

$$2^{*} \times 17 \times 10^{3} \times 240 \times 10^{-6}$$

or 8 (*each one cycle will cause two strikes).

The prestrikes will give rise to voltage surges from 3 to 5 p.u. as discussed above and for which all the terminal and the interconnecting cables must be suitable. The following are field data collected from actual operations to illustrate this phenomenon:

- On switching ON a 6.0 kV motor, a front time as low as 0.5 μs and the peak voltage transient, V_t, up to 15 kV, i.e. 3 p.u.

  $$\left(1 \text{ p.u.} = \frac{\sqrt{2}}{\sqrt{3}} \times 6 \text{ kV}\right)$$

  has been measured.
- Voltage transients up to 3.5 p.u. with front times as short as 0.2 μs are mentioned in Working Group 13.02 of Study Committee 13 (1981) and Slamecka (1983).

Thus a switching 'ON' phenomenon may give rise to steep-fronted waves, with a front time as low as 0.2 μs and high to very high TRVs (V_t) with an amplitude up to 3.0–5 p.u. Both are the causes of damage to the windings' insulation of a motor.

Note

Above we have analysed the case of an induction motor during a switching sequence for systems of 2.4 kV and above. The phenomenon of voltage surges in transformers, capacitors, interconnecting cables or overhead lines etc. is no different, as the circuit conditions and sequence of switching will remain the same for all.

It is another matter that all such equipment would have a better insulation level (BIL) compared to an induction motor and may not be as endangered by such surges as the motor. In the subsequent text we have placed more emphasis on motors, being typical of all.

(iii) Surges generated during an interrupting sequence

This can be analysed in the following steps:

- When the interrupting circuit has a high p.f. (cos ϕ), i.e. a healthy tripping and also circuits that are non-capacitive.
- When the interrupting circuit is underloaded and has a low p.f., i.e. when it is highly inductive and also circuits that are capacitive.
- Interrupting large inductive or capacitive currents.

17.7.3 Healthy tripping

In the first case, it is easy to interrupt the circuit, which poses no problem of current chopping (premature tripping) before a current zero or a prolonged arc after a current zero for the following reasons:

1 **No current chopping:** An induction motor or a transformer should be operating at near full load, to possess a high p.f. and carrying a near full load current during such an interruption. Even the most modern, very fast operating interrupting devices, such as a VCB (Section 19.5.6) will not be able to cause a premature interruption. The interruption will thus be devoid of any surge voltage.

2 **No restrike at current zero:** When the voltage and the current phasors are close to each other (Figure 17.11(b)) or approaching a unity p.f. (Figure 17.11(a)), they will reach a current zero almost simultaneously. Even a p.f. such as 0.85 ($\phi = 30°$) and above will have a residual voltage of not more than 50% of the system voltage at the current zero. Generally, an induction motor running almost at full load will have a p.f. of more than 0.85 (Table 1.9) and a recovery voltage of not more than 50% across the parting contacts at a current zero. This voltage will be insufficient to break the dielectric strength across the gap between the separating contacts and establish an arc. Hence, the interruption of a circuit at a high p.f. will be devoid multiple restrikes that are responsible for the surge voltages. The circuit will interrupt at the first current zero. The situation will be similar in a transformer.

17.7.4 Interrupting small inductive or capacitive currents

In the second case, when the circuit has a low p.f. or carries a capacitive charging current a condition which may occur in the following cases (for ease of analysis we have classified them into two categories):

- When interrupting an underloaded induction motor, or a transformer, such as when they are operating at or near no load.
- Interrupting a cable or an overhead line when extremely underloaded, such as when operating at a near no load.

Normally the interruption should take place at the first natural current zero. Modern high-speed interrupting devices, however, may interrupt too small a current than rated, such as noted above, prematurely, i.e., before a natural current zero. This may lead to steep-fronted high TRVs, similar to those discussed earlier, capable of restriking an arc between the parting contacts, until at least the next current zero. In actual operation, this TRV is seen to rise to 2.5–3 p.u. The phenomenon is termed current chopping and is dealt with separately in Section 19.6. It is detrimental to a successful interruption of the switching device and may cause damage to the terminal's equipment, such as the interconnecting cables, induction motors and transformers etc.

17.7.5 Interrupting large inductive or capacitive currents

- Interrupting when the motor is in a locked rotor condition (Section 1.2) or is still accelerating and carrying a highly inductive current of the order of six to seven times the rated current at a p.f. of about 0.2–0.3.

- Interrupting an induction motor under a stalled condition which is almost a locked rotor condition.
- Tripping an inductive or capacitive circuit immediately after a switch ON as a result of a momentary fault or for whatever reason and even during a fast bus transfer (temporary tripping and reswitching).
- Interrupting the equipment such as an induction motor, a transformer, a cable or an overhead line on a fault, such as on a short-circuit or a ground fault.
- Interrupting a charged capacitor.

In all the above cases, whether the load is inductive or capacitive, the voltage and the current phasors are more than 70° apart. At a current zero, the system voltage will reappear almost in full (around 95% or so) across the pasting contacts of the interrupting device (Figure 17.11(c)). This voltage is detrimental to the successful interruption of the circuit at the current zero, unlike in the previous case.

Circuit interruption is a transient condition, as it constitutes abrupt changes in the circuit parameters L and C, which also alter the characteristics of the transient wave and its behaviour. The characteristics of a transient wave depends upon the circuit's surge impedance, Z_s, which, in turn, depends upon the circuit parameters L and C:

$$\left(Z_s = \sqrt{\frac{L}{C}} \right)$$

Therefore, if the arc does not extinguish at the first current zero, it will give rise to voltage surges (TRVs) at very high surge frequencies

$$\left(f_s = \frac{1}{2\pi\sqrt{LC}} \right)$$

of the order of 5–100 kHz or more.

The generation of voltage surges is almost the same as discussed when the circuit was being closed (Section 17.7.2(ii)). The sequence of generation of the voltage surges can be analysed for more clarity as follows.

The magnitude of surge voltages will depend upon the instant at which interruption of the switching device will take place, on the voltage and the current waves. Refer to Figure 17.11, illustrating the relative displacement of the voltage and the current waveforms at low p.f.s of, say, 0 and 0.3, which may occur during such interrupting conditions as noted above. This is when the load was inductive. Had the load been capacitive, the voltage and current phasors would have again been almost 90° apart, the current leading the voltage by nearly 90°, and same interrupting conditions would arise as in the case of an inductive load.

Under such switching conditions the voltage and current waves would be out of phase by almost 70° or more, and at every current zero the recovery voltage would be almost at its peak (95% or so), which would reappear across the interrupting contacts, re-ignite the arc plasma and cause a reflected wave of similar magnitude. The situation is further aggravated by the motor's or the transformer's self-induced e.m.f. or the capacitor's own charge, which may also fall phase apart with the recovery voltage and add up to the same. The cumulative effect of all such voltages may cause a significant rise in the TRV, which may become steep fronted and assume almost a similar magnitude as we have analysed in the case of a 'switching-on' sequence, i.e. up to 3–5 p.u., at surge frequencies, with a front time of even less than 1 μs (Section 17.7.2(ii)). The phenomenon is quite complex. Theoretically only an approximate analysis can be carried out, as we have done in the case of a switching ON. Use of oscillograms, as illustrated in Figure 17.5, may be an accurate means of measuring the exact magnitude and shape, i.e. steepness and front time of the TRVs, to determine the r.r.r.v of such high-frequency TRVs. The consequences of such steep-fronted TRVs on circuit interruption may pose the following problems in successful interruption:

1. The magnitude of surge voltage will depend on the instant at which interruption of the switching device shall takes place, as illustrated in Figure 17.11. A TRV of 3–5 p.u., for a normal interrupting device, may be large enough to prevent the arc from being extinguished at the next current zero. It may be capable of breaking the dielectric strength of the interrupting contacts and re-establishing an arc after a current zero, until the next natural current zero at least. In the subsequent half cycle, after the first current zero and until the next current zero, the arc will repeatedly restrike at a very high transient frequency of the order of 5–100 kHz or more, depending upon the circuit constants L and C. For a 12 kHz surge frequency, for instance, the arc will restrike for at least 120 cycles of f_s or 240 times, as determined below, before the next current zero:

   Time for half a cycle of a 50 Hz normal system

   $$= \frac{1}{2} \times \frac{1}{50} \text{ or } \frac{1}{100} \text{ seconds}$$

   In this time the surge frequency will undergo

   $$12 \times 10^3 \times \frac{1}{100} \text{ or } 120 \text{ cycles}$$

   The repeated restrikes of the arc for about 240 times will result in steep-fronted, extremely severe TRVs, sometimes even more severe than a lightning surge. They are capable of inflicting serious damage to the interconnecting cables and the end turns of the connected equipment, be it a motor or a transformer, besides damage to the interrupting device itself and its interrupting contacts. The generation of surge voltages beyond 5 p.u. is, however, seldom noticed due to self-attenuation. The circuit parameters themselves provide the required dampening effect.
2. In the above one-half of a cycle of the natural frequency, the moving contact would separate by 1/100 s. In fast-operating interrupting devices, this time is normally adequate to achieve a sufficient contact gap and to restore adequate dielectric strength to interrupt the circuit by the next current zero and allow no further restrikes of the arc. Otherwise the arc may be re-established and the process may continue until the TRV itself attenuates or the contact moves farther

away, to extinguish the arc naturally as a result of a larger contact gap. The fast-operating interrupting devices such as an SF_6 or a VCB may interrupt the circuit at the first current zero and the worst, by the next current zero whereas other interrupting devices may take a half to one and a half cycles of normal frequency to interrupt the circuit and extinguish the arc. This is long enough to cause severe damage to all the connected equipment and components unless adequate measures are taken to protect them by providing surge suppressors or surge capacitors or both.

3 The same theory will apply in capacitor switching except that the interrupting current will now be leading the voltage by almost 90° instead of lagging. See also Section 23.5 to determine the amount of surge voltages and inrush currents.

Note
While interrupting low p.f currents it is observed that the generated voltage surges were higher when interrupting higher currents compared to interrupting lower currents. The statement is generalized on the basis of experiments conducted on an induction motor by CBIP (see Central Board of Irrigation and Power, 1995).

17.7.6 Switching surges on an LT system

These do not occur on an LT system due to inadequate switching voltage. An LT system is therefore not affected during a switching operation like an HT system. At most there can be an overvoltage, up to twice the rated voltage across the terminal equipment, when a switch is closed on a circuit that is already charged, such as a capacitor bank or an induction motor, and the impressed voltage falls phase apart with the induced e.m.f. The following is a brief analysis to corroborate this statement:

- The BIL of the LT system and the equipment connected on it are suitable for withstanding such overvoltages (Tables 11.4, and 14.1 or 14.2).
- As a result of a better insulation and insulating medium of an LT interrupting device, compared to its voltage rating, there are no restrikes of the contact gap after a current zero. The TRV is insufficient to establish an arc.
- However, abnormal transient voltages are sometimes noticed on the LV side of a transformer as a result of transference from the HV side or due to contact bouncing, which are not necessarily switching surges. Although the line side impedance would greatly dampen such transferred surges and in all probability may not be a cause for concern it is advisable to protect large LT motors which are installed next to such a source, such as a transformer and which experience a transferred surge, which may be enough to cause damage. For more details on transferred surges refer to Section 18.5.2.

17.7.7 Voltage surges caused by contact bouncing

This occurs in a contactor during its closing operation, and may result in pitting and burning of contacts. It may also give rise to high-voltage transients (not necessarily switching transients), similar to the phenomenon of a current chopping (Section 19.6). The moving contacts, while moving, acquire a certain amount of velocity and momentum, and release this, in the form of kinetic energy, to the fixed contacts as soon as they make contact with them. The contact mechanism, being flexible and spring loaded (Figure 17.13), has a tendency to bounce back. After being bounced, the contacts attempt to close again. The situation is a near replica of an open transient condition discussed in Section 4.2.2(1) and so are its consequences. During bouncing, however, the circuit is never broken, as arcing persists between the contacts. The contacts may bounce again, and the process may be repeated, depending upon the design of the closing mechanism, until the process attenuates and the contacts finally close. Figure 17.13 illustrates such a phenomenon. This is not a desirable feature, yet it is not totally avoidable, due to design limitations. But extremely low-bounce closing

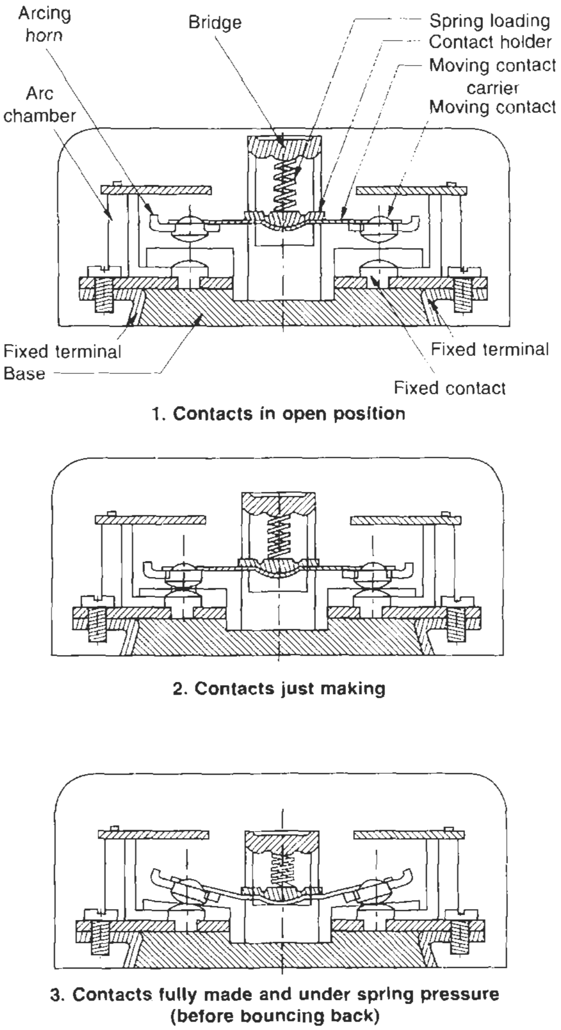

1. Contacts in open position

2. Contacts just making

3. Contacts fully made and under spring pressure (before bouncing back)

Figure 17.13(a) The phenomenon of contact bouncing

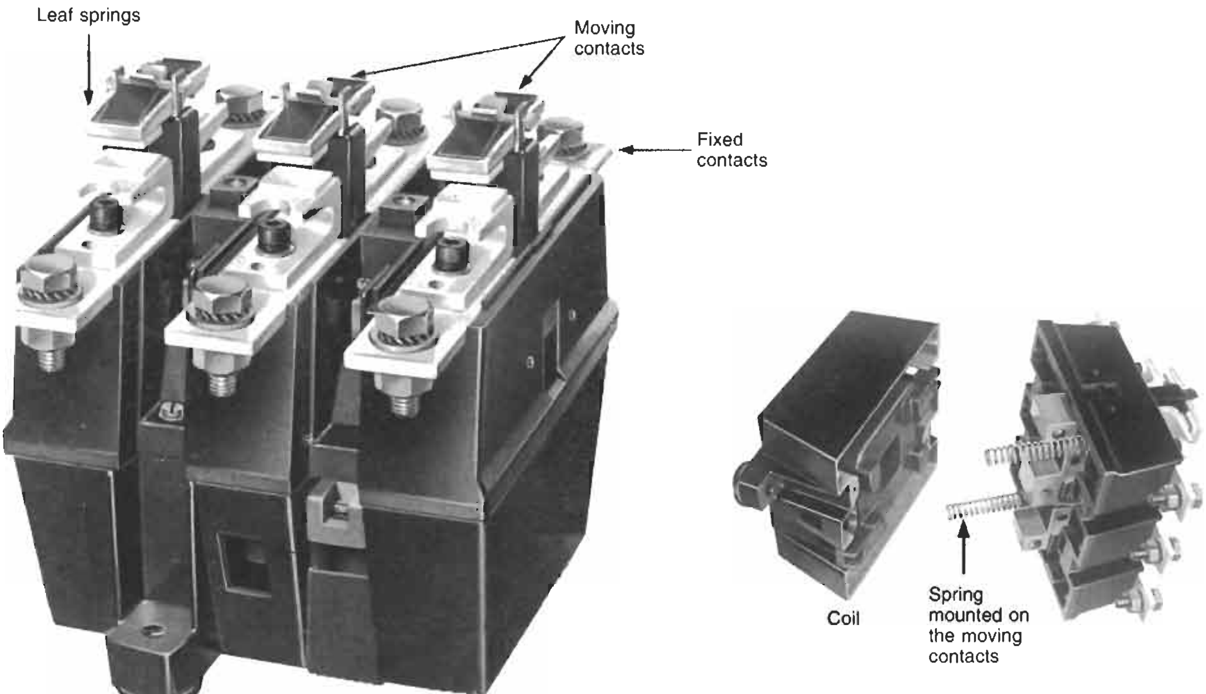

Spring-loaded moving contact assembly

Figure 17.13(b) A typical view of a contactor showing arrangement of fixed and moving contacts (Courtesy: L & T)

mechanisms have been developed by the leading manufacturers to ensure an almost bounce-free closing of the contacts. These mechanisms have a closing time as low as 0.5 ms or one fortieth of a cycle of a 50 Hz system by adopting a near-balanced closing action through a low-inertia magnetic coil, leaf spring cushioning effect of moving contacts and contact spring, etc.

When switching an induction motor, there may therefore also be a transient current for a few milliseconds in addition to the starting current. The magnitude of surges will depend upon the instant at which the contacts will make on the voltage wave. It may be up to fifteen to twenty times the rated current, or two or three times the starting current. Thus, a contactor, on bouncing, will enhance its voltage amplitude as discussed in Section 17.7.2(ii) and will continue to do so until the process attenuates. The contacts may even weld together in such circumstances. The situation becomes even more difficult when the load is inductive or capacitive, which it is in most cases. The contact interruption, although it poses similar problems to those discussed in Section 17.7.2(iii), is less severe in this case than contact making, as there is now no contact bouncing.

To tackle the problem of arc quenching, large LT contactors, say, 100 A and above, and all HT contactors are provided with an arc chamber with splitter plates, (see Figures 19.11 and 19.12).

It is for this reason that a contactor is classified by the duty it has to perform, according to IEC 60947-4-1, as noted in Table 12.5.

17.7.8 Voltage spikes developed by static drives

Yet another source of voltage surges is the output of the solid-state drives as discussed in Section 6.13.

17.8 Effect of steep-fronted TRVs on the terminal equipment (motor as the basis)

A healthy contact making or interruption, not associated with any restrike voltage transients, can be assumed as carrying only the nominal switching surges, as defined by a 250/2500 μs impulse, with a front time of 10 μs and above (Section 17.3.1, Figure 17.2(b)). This will usually cause no harm to the terminal equipment. But a switching sequence, involving a restrike of the arc, between the moving and the fixed contacts of the interrupting device, gives rise to steep-fronted transient voltages of up to 3–5 p.u., as discussed earlier. The switching surges may exist on the system for not more than a half to one and a half cycles of the power frequency, and can have a front time t_1 as brief as 1 μs or less. In extreme cases, it can even reach a low of 0.2 μs (see Working Group 13.02 of Study Committee 13 (1981) and Slamecka (1983)) and become capable of causing severe damage to the terminal equipment. All such waves are termed front of waves (FOWs).

When such a surge penetrates electrical equipment such as an induction motor's winding, most of its stress may appear only across a small part of the windings (the line end coil or the first coil). The front of the surge will become less steep as it penetrates the windings, due to lumped capacitances C of the winding insulation and also because of partial reflections and damped refractions (Section 18.5.1) from the discontinuities of the windings as well as eddy currents (Section 1.6.2.A-iv) which will add to 'L'. The interturn voltage stress will thus be higher for the line end coil of the windings than the subsequent coils as shown by the following example.

Example 17.1

A simple switching surge of, say, 250/2500 μs (Sections 17.3.1 and 17.6.6 for velocity) would mean that in free space, considering the speed of propagation as 200 m/μs, it will propagate by

$$\frac{250}{10^6} \times \frac{200}{1000} \times 10^6 = 50 \text{ km}$$

by the time it reaches its first peak. Considering an average velocity of propagation in windings inside the slots and overhangs as 100 m/μs (typical), the surge in windings will travel 25 km, by the time it reaches its first peak. This distance is too large for the normal length of a motor or a transformer windings or the interconnecting cables and/or the overhead lines etc. For all theoretical considerations, therefore, we can assume this switching surge to be uniformly distributed over the entire length of the current-carrying conductors and thus is only moderately stringent. It is possible that the surge may not even reach its first peak by the time it has travelled the entire length of the windings. The maximum transient stress per unit length of the conductor, V_t/l, and also between the turns of the coils will be low (V_t being the amplitude of the prospective surge and l the length of the winding per phase).

The circuit constants L and C through which the first peak of the switching surge will travel determine the shape and severity (steepness) of the surge. As the wave travels forwards it will change these constants at every junction and the discontinuities of the windings. Consequently change the shape of the wave front, which will be diminishing gradually in steepness until it loses all its severity.

If the switching is also associated with repeated restrikes of the contact gap of the switching device causing steep-fronted voltage transients with a magnitude of 3.5 p.u. or so and a front time, t_1, as low as 0.2 μs (assumed), the above concept of transient voltage distribution over the length of windings will change abnormally. It would now travel only $0.2/10^6 \times 100 \times 10^6$, i.e. 20 m, by the time it reaches its first peak. This distance is too short and may involve just one coil or a few end turns of it, be it motor or a transformer windings, and very short lengths of the interconnecting cables or the overhead lines etc. Such switching surges will be non-uniformly distributed, as the voltage stress of 3.5 p.u. will be distributed just over a length of 20 m. For a system voltage of 6.6 kV, the transient stress per unit length would be

$$= 3.5 \times \frac{\sqrt{2}}{\sqrt{3}} \times \frac{6.6 \times 1000}{20}$$

$$\simeq 943 \text{ V/m}$$

If we consider some length of the interconnecting cables and deduct this from the total length of 20 m, the interturn stresses may assume much more dangerous proportions. The interturn insulation of the windings must be suitable to withstand even a higher impulse level than calculated above. As standard practice, the whole coil, if it is pre-formed, is tested for the prescribed impulse withstand level as in Table 11.6. It should be ensured that the actual steepness and amplitude of the FOW is well within the prescribed BIL.

The first few turns of the line end coil of a motor or transformer and short lengths of interconnecting cables and overhead lines and their associated terminal equipment, will thus be subject to severe stresses and will be rendered vulnerable to damage by such steep-fronted transient voltages.

Various experiments conducted by different agencies have revealed that the voltage stress across the first coil alone may be as high as 70–90% of the total transient voltage across a motor windings, having a front time, t_1 as low as 0.2 μs. (see Working Group 13.02 of Study Committee 13 (1981) and Slamecka (1983)).

Slamecka (1983) has produced curves, to illustrate the TRVs appearing across the entrance coil for different front times t_1, for different lengths of conductor of the first coil (Figure 17.14). From these curves, one can draw an inference that the greater the length of the entrance coil of the machine, the higher will be the interturn stresses to which it will be subject and vice versa. As illustrated in Example 17.1, a transient voltage wave having a front time of 0.2 μs will propagate about 20 m in the windings and will affect only this length of the entrance coil. This is illustrated in Figure 17.14. As the TRV propagates ahead and penetrates deeper into the slots, it will have its amplitude dampened and will subject the coils ahead to much less TRV. The curves in Figure 17.14 also suggest that if the length of the entrance coil is reduced, it will be subject to fewer stresses, as the remaining TRV will become distributed to the following coils. A slightly less steep surge, which is more probable, may travel through the length of the interconnecting cables and yet envelop

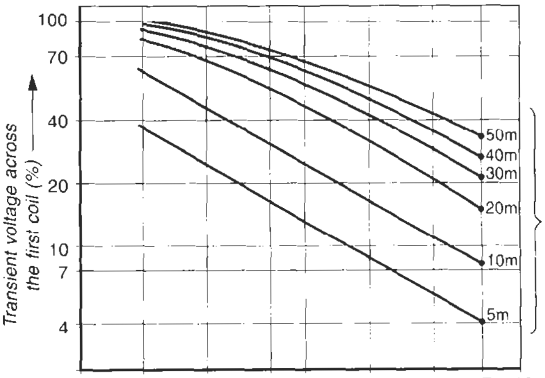

Figure 17.14 A transient voltage stress across the first (entrance) coil of an induction motor as a function of front time (t_1) and length of entrance coil 'l' (from Slamecka, 1983)

the whole windings. It has been observed that TRVs with a front time of 0.5 μs and more are fairly evenly distributed over the entire length of windings.

Different installations with different lengths of interconnecting cables, type of switching device, size and design parameters of a machine (particularly a rotating machine), will influence the steepness of surges and their distribution over the length of windings. Different studies at different locations have revealed the following information:

- If the surge is very steep, say, with a front time of 0.2 μs or less, and the cable length is short, say, 10 m (presumed), it may inflict all its severity to only the entrance coil of the machine and sometimes even only a few entrance turns of this coil. However, with the technological improve-ment of switching devices, the arc prestrikes are now less predominant or non-existent and hence, the switching surge may not be as steep as described here.
- In all probability the steepness may be between 0.2 and 0.4 μs, in which case, depending upon the length of the interconnecting cables and of each motor coil, the maximum surge may appear across the last few turns of the entrance coil or the first few turns of the second coil, as a result of multiple reflections at the discontinuities and the joints. Multiple reflections may raise the amplitude of the incidence wave up to twice its initial value, as discussed later. Alternatively, if it be fairly evenly distributed through-out the whole winding. The last coil where it makes its star point or a few last turns of this last coil may be subject to severe voltage surges due to multiple reflections at the star point.

Generally, it is the steepness of the surge that has a greater severity on interconnecting cables and machine windings. The travelling waves and their partial reflections at the discontinuities of the windings influence the surge's amplitude and distribution over the length of the windings. The windings' length, shape, inductance L and leakage capacitance C and speed and size of the machine may be termed vital parameters that play a significant role in determining the prospective amplitude (V_t) of a voltage surge and its distribution over the length of the windings. Below, we briefly discuss such parameters to better understand the phenomenon of voltage surges and their influence on the terminal equipment and interconnecting cables.

17.8.1 Surge impedance

The value of L and C of a machine will determine its surge impedance $Z_s = \sqrt{L/C}$ and surge frequency $f_s = 1/(2\pi\sqrt{LC})$. A low surge impedance will help to dampen the prospective amplitude, V_t, of the surge voltage and hence the stresses on the windings. A low surge frequency will help to limit the number of restrikes of the interrupter and in turn the amplitude of the surge, V_t. A lower f_s will also reduce the steepness, V_t/t_1, of the surge. Hence, a low Z_s as well as a low f_s are always desirable. It is possible to modify the Z_s of a machine at the design stage to contain the prospective voltage, V_t, within safe limits if the type of interrupter, length of interconnecting cables and the characteristics of the likely prospective surges are known.

Note

The length of the interconnecting cables plays a vital role in containing or enhancing the severity of the incidence wave. After the interrupter, the surge enters the cable and propagates ahead. As it propagates, it rises in amplitude, at a rate of V_t/t_1 (Figure 17.15) until it reaches the far end of the cable. The longer the cable, the higher will become the amplitude of the incidence wave which will be more severe for the terminal equipment (refer to protective distances, Section 18.6.2). The length of the interconnecting cable is therefore recommended to be as short as possible. The manufacturer of the interrupting device can suggest a safe length for different sizes of cables, depending upon the voltage of the system and the equipment it is feeding.

The approximate values of the surge impedances of motors and transformers of various ratings and voltages may be obtained from their manufacturers and drawn in the form of a graph, as in Figure 17.7. With the help of these values, one can determine the likely surge voltage from the graphs of Figure 17.8 that may develop when using different interrupting devices.

To this value is added the peak phase voltage of 1 p.u., of the system to determine the total peak voltage likely to arise on a no-load interruption. This total peak voltage should be less than the impulse voltage withstand level of the equipment. For motors, it should be well within the impulse test values given in Table 11.6. The effect of cable length is ignored, presuming that the cable length is short and does not contribute in enhancing the severity of the incidence wave.

Example 17.2

Consider a 500 hp (≃ 500 kVA) 6.6 kV motor. The surge impedance from Figure 17.7(b) Z_s = 4500 Ω. This surge impedance may generate the following surge voltages during an interruption by different interrupting devices, depending upon their chopping currents, according to Figure 17.8:

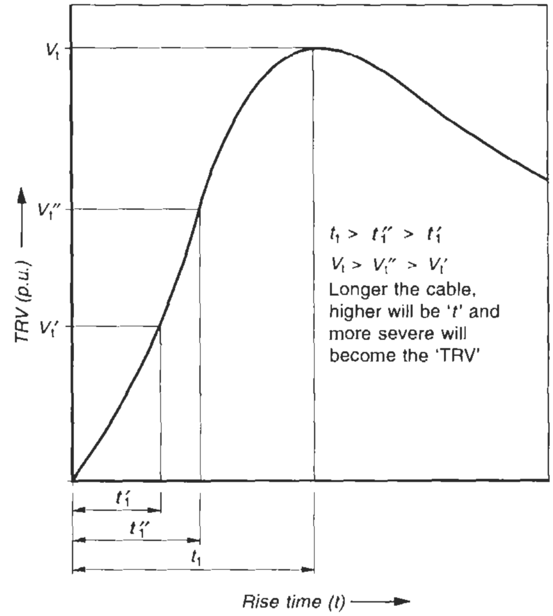

Figure 17.15 Influence of cable length on the TRV

OCB (MOCB or LOCB):

5 kV + 5.4 kV = 10.4 kV

$$\left(1 \text{ p.u.} = \frac{\sqrt{2}}{\sqrt{3}} \times 6.6 = 5.4 \text{ kV}\right)$$

SF_6 breaker: 7.5 kV + 5.4 kV = 12.9 kV

Vacuum breaker with copper–chromium contacts:

6 kV + 5.4 kV = 11.4 kV

Vacuum breaker with copper–bismuth contacts:

35 kV + 5.4 kV = 40.4 kV.

From the above it can be noted that the surge voltages that may develop during a switching operation, with all types of breakers except Cu–Bi VCBs, are well within the prescribed impulse withstand voltage of 16.2 kV as in Table 11.6, column 2. In Cu–Bi VCB switching it may be as high as 40.4 kV, which is far beyond the prescribed impulse withstand level of 16.2 kV. Such breakers, as standard manufacturing practice, are fitted with metal oxide surge arresters. Otherwise a suitable surge arrester must be provided near the motor.

17.8.2 Number of turns per coil

This is another vital parameter of a machine, influencing the distribution of voltage surges over the windings. As noted earlier, protection of interturn insulation is very important, particularly when the machine has a multi-turn coil arrangement and where the turn insulation is likely to be overstressed by the incident waves. Single-turn coils, having the same turn and coil insulation and coils deeper in the slots, are less influenced. A fast-rising voltage wave at the motor terminals will lift the potential of the terminal (entrance) turns, while turns deeper in the windings or the slots will be subjected to lesser severity due to discontinuities and partial reflections. They are, therefore, sluggish in responding to the arriving surges and are subject to attenuated severity of the surge and are less stressed than the entrance turns. To protect the line end coil or its first few turns, it is essential to keep the length of the coil as short as possible, as illustrated in Figure 17.14, to subject the whole coil to an equal interturn stress. Otherwise the severity of the surge may affect only the entrance coil or its few entrance turns.

Example 17.3
Consider a winding having six numbers of coils/phase as shown in Figure 17.16, and suitable for a surge voltage (BIL) of 3 p.u. (Table 11.6). If the surge travels only to the first coil, which is suitable for 3/6 or 0.5 p.u., then all the effect of the surge (3 p.u) will impinge across this coil alone and greatly overstress its interturn insulation. Thus, a 3 p.u. surge would stress the interturns by 3 p.u./0.5 p.u. or six times the voltage for which the insulation of the coil or its interturns are suitable or six times more than a uniformly distributed transient wave. Hence, the relevance of the length of the entrance coil in a steeply rising voltage wave.

Consequently an FOW, whose amplitude, V_t, is well below the insulation level (BIL) of the machine, may adversely affect the interturn insulation of the first coil. Even if the winding is capable of withstanding such transients, their repeated occurrence may gradually degrade its insulating strength to a point of a possible failure over a period of time. A steep-fronted wave may damage the insulation in the form of microscopic holes called 'pinhole' failures. While a single pinhole may be of little relevance, a number of them may cause hot spots, leading to eventual failure of the insulation.

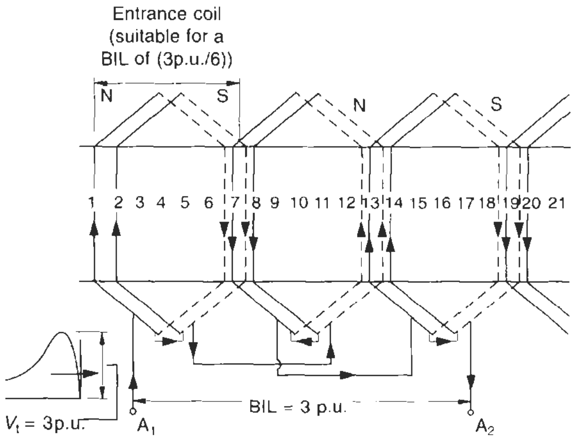

Winding showing 6 slots or 6 coils per phase and one turn per coil
If, there be n number of turns per coil,
then voltage across each turn = $\frac{V_t}{6n}$.

Figure 17.16 One-phase winding, illustrating Influence of the arriving surge on the entrance coil

17.8.3 Rating of a rotating machine

It has been seen that smaller rating HT machines are more susceptible to steeply rising voltage surges, compared to larger ratings, due to their relatively weaker interturn insulation and require more careful attention to their adequate protection. We attempt to explain this phenomenon as follows:

1 In smaller ratings although the ratio of copper to insulation of the windings in the slot is low (the content of insulation high), the turn insulation is low, roughly

Table 17.1 Typical ratios of copper to insulation the turns per coil in smaller frame sizes

Frame size (Table 1.2)	*Ratio of copper to insulation*		*Turns per coil*		*Turn insulation to voltage surges*
	6.6 kV	11 kV	6.6 kV	11 kV	
400	1.5	0.8	12	20	Highly vulnerable
500	2.0	1.2	9	15	Moderately vulnerable
630	2.2	1.3	6	10	

Note For our discussion, the frame size 400 alone is more critical. Frame sizes 500 and 630 are only indicative to illustrate the comparison.

in the same proportion. This is because of the higher number of turns per coil which diminish the dielectric quantity, hence the endurance of the turn insulation, as witnessed during tests. The higher number of turns also pose a problem in forming the coils, particularly at bends, as it is difficult to maintain the same quality of insulation. Table 17.1 (see Pretorius and Eriksson, 1982) suggests typical ratios for different voltage systems in three smaller frame sizes used for an HT motor.

2. Lower ratings have low L and C and therefore have a higher Z_s (Figures 17.7 and 17.8) and do not help in dampening or taming the surges.
3. Similarly, high-speed machines too have more coils per slot, subjecting the interturn insulation to higher stresses.
4. The length of the entrance coil is another important parameter, which may be subject to most of the voltage stress up to 70–90%, as noted earlier, for very fast-rising ($t_1 \leq 0.2$ μs) TRVs. So are the last few turns of the entrance coil, or the first few turns of the second coil, for fast-rising surges ($t_1 \simeq 0.2 - 0.4$ μs), or the last few turns of the last coil making the star point of the windings, when the TRV is almost uniformly distributed (t_1 approaching 0.4 μs). The steepnesses are only indicative to illustrate the severities of surges and their influence on the turn insulation. For a particular size and design of motor, the steepness and its influence may vary somewhat.

Other than the above, the interconnecting cable length between the switching device and the machine also plays an important role in the distribution of the fast-rising voltage surges as discussed earlier. It is the cable that will bear the initial severity of the rising surges, before the surges reach the motor terminals. Hence, upon the rise time, t_1, will depend the safe length of the interconnecting cables to provide the maximum dampening effect. For very fast-rising waves, in the range of 0.2–0.4 μs or so, cable lengths in the range of 30–300 m are seen to provide the maximum dampening effect. Actual simulation tests or studies of similar installations are, however, advisable, for a more accurate assessment.

For a less steep surge, the situation will be different. Now, the longer the cable, the higher will be the amplitude that the surge will attain by the time it reaches the motor terminals. For example, for a surge with a rise time, t_1 of 1 μs, the cable must be at least 100 m or more in length (considering the speed of propagation as 100 m/μs), and sometimes it may not be practical to provide this. The steepness of surge is thus a very vital parameter in deciding an ideal cable length to achieve the desired dampening effect through cables. A slightly shorter length than this may subject the terminal equipment to a near peak amplitude of the arriving surge. It is therefore advisable to keep the length of the interconnecting cables as short as possible, to subject the terminal equipment to only a moderate amplitude of the arriving surge, much below its prospective peak. (For more information on the subject refer to Section 18.6.2 on protective distances of surge arresters).

17.8.4 The need to protect a rotating machine from switching surges, contact bouncing and surge transferences

Switching surges have been seen to be the severest of all. But it has been a greatly debated subject whether a protection is overemphasized against switching surges, particularly when the occurrences of such high TRVs may be rare yet are significant to cause concern, opinions differ. Technological improvements and application of the latest techniques in the extinction of arc plasma, making use of high-speed interrupting devices, using SF_6 or vacuum as the insulating and the quenching medium, meticulous design of the arc chamber, design and material of the making contacts achieve an interruption almost devoid of restriking and adopting the latest insulating practices for motor insulation (Section 9.3) such as vacuum impregnation and additional bondage and bracing of the windings' end turns have diminished if not totally eliminated the effect of these surges on machines. Nevertheless, to take account of the possibility of these surges causing damage to the terminal equipment, generally 2.4 kV and above, it is advisable that protection be provided as a preventive measure to protect the costly machines and, all the more costlier, against the risk of a shutdown of a plant in the event of a possible failure of the machine. More so when a rotating machine has a low level of insulation (low BIL) compared to an oil-filled transformer.

Dry type equipment, such as rotating machines, have lower impulse withstand levels compared to a liquid-type machine, such as a transformer or a switchgear assembly. A comparison of impulse voltage withstand levels for the same system voltage for motors (Table 11.6) and for switchgear assemblies (Tables 13.2 or 14.1) will reinforce this point. A motor is always vulnerable to both internal and external voltage surges. Circuit switching is the most onerous of all and can overstress the windings of a machine if it is not protected adequately, leading to an eventual breakdown, if not an immediate failure. In fast-acting devices such as a VCB with Cu–Bi alloy contacts (Section 19.5.6) the manufacturers provide a surge suppressor.

During an interruption, an SF_6 interrupting device is found to be normally devoid of a switching surge, as there is no chopping of current. During a closing sequence, however, in both a VCB and an SF_6 breaker, the switching surges are almost within the same range, say, 1.5 to 2.5 p.u., as recorded during a simulation test on a 400 kW, 6.6 kV motor (see Central Board of Irrigation and Power, 1995).

Misconception

1. It is a misconception that only large high-voltage motors need be provided with surge protection, in preference to small machines, because they are more likely to encounter dangerous surges. Analysis of various motor circuits, as noted earlier, indicates that smaller and higher-speed motors are more subject to the effects of voltage surges rather than the larger or lower-speed motors due to one or more of the following reasons:

- The lower ratings of rotating machines, having full load current of around 60 A and less, i.e. 600 kW or less for a 6.6 kV system and 300 kW or less for a 3.3 kV system, are generally prone to cause dangerous steep-fronted TRVs when being interrupted on no-load by a VCB or a vacuum contactor, as a result of possible current chopping. For a full load current of 60 A, the no-load current would be approximately 50%, i.e. 30 A or even less (Section 1.7). It is therefore possible that current chopping may take place just before a natural current zero at around 10% if it, i.e. 3 A or so. Refer to Figure 17.17. The latest vacuum interrupters with Cu–Cr alloy contacts (Section 19.5.6) may not allow the current to reach its natural zero for a normal interruption and may chop it somewhere near 3–5 A and cause TRVs. Moreover, the lowest rating of the interrupting device itself may be large enough for this current to be interrupted at current zero and cause current chopping.

2 Transient voltage damage usually appears in some other form of dielectric failure such as caused by thermal overloading, undervoltage and stalling etc., totally masking the original cause, which could be due to switching. Field research and statistical study of failures have revealed that almost 35% of total dielectric failures in power stations have been caused by surges, rather than any other reason (Central Board of Irrigation and Power, 1995). Surge protection for a smaller motor, say, up to 300 kW in a 3.3 kV and 600 kW in a 6.6 kV system is thus advisable.

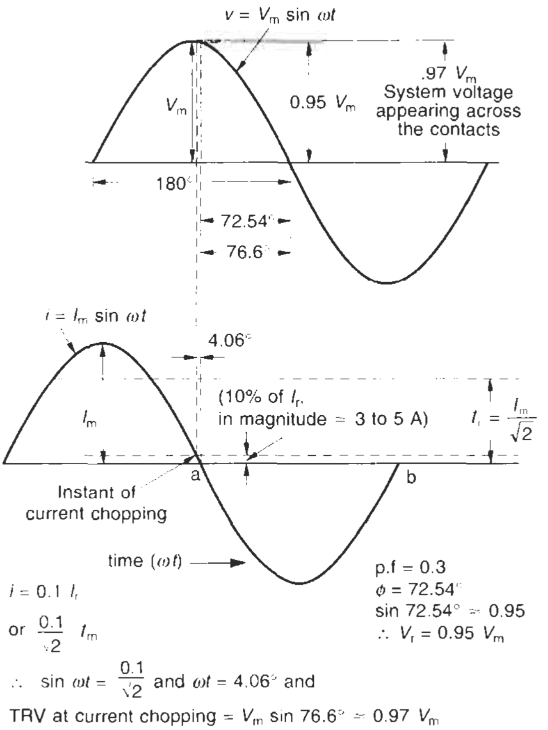

Figure 17.17 Current chopping, say, at 10% of an inductive current of 0.3 p.f. giving rise to almost a full system voltage.

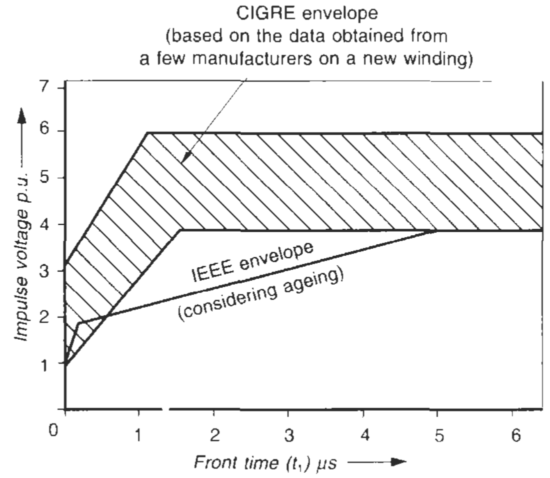

Figure 17.18 Dielectric envelopes for a 6.6 kV motor

Manufacturers of the rotating machines, being the best judges, to suggest the most appropriate protection required for their machines, depending upon the surge impedance of the machine and the likely voltage surges that may develop using different types of switching devices.

Corollary

In case of static drives also generating similar switching surges, their manufacturers provide the safe cable lengths as a standard practice, Section 6.14.1.

Dielectric envelope

This is a curve that defines the limits of surge voltages and the corresponding front times that a machine will be able to sustain without a failure during a switching operation or a lightning strike. Such a curve must be available for all machines and is provided by their manufacturers. Figure 17.18 shows a dielectric envelope for a 6.6 kV motor as recommended by IEEE, also considering motor ageing. The figure also shows a curve provided by Electra (1981; see also Gibbs *et al.*, 1989). This curve is based on the data obtained on new machines from a few motor manufacturers.

Surge protection

Protection for the machine should be such that the voltage surges and their rise times, whenever they occur in the system, shall fall within this envelope of the machine. (Refer to Section 17.10 for a total surge protection.)

17.9 Determining the severity of a transient

17.9.1 Simulated test circuit

From the above it is essential to predetermine the nature, magnitude and steepness of such transients to decide the most appropriate protection or preventive measures for an HT motor, particularly, for critical installations, such as a power station or a process plant, to avoid the least risk. In our discussion so far, the circuit conditions, as assumed and the analysis of the voltage surges as generated, were purely statistical and varied from machine to machine and from one installation to another. The purpose so far has been to provide a general analysis of surge voltage phenomenon, its consequences on the machine and possible remedies and/or protection. For absolute motor protection, accurate transient conditions must be known. To determine the transient conditions accurately, a working committee of the IEEE-Cigre has suggested a simulated test circuit (Electra, 1981; Gibbs *et al.*, 1989) for all manufacturers of interrupting devices (1) to determine the behaviour of their devices, with predetermined circuit parameters, almost representing a normal supply side of the machine; (2) to assess the behaviour of the machine during a switching operation and subsequent restrikes, if any, as a guideline for the user; and (3) to decide on the more appropriate switching device for the machine and its surge protection, based on the dielectric capability of the machine (Figure 17.18). The test circuit is illustrated in Figure 17.19 simulating:

- On the supply side of the interrupter, an equivalent busbar, inductance and lumped capacitance with a provision to connect p.f. correction capacitors, if required, to represent a replica of the actual installation.
- On the load side, the interrupter is connected through a cable to the equivalent circuit, with the required quantities of lumped resistance and reactance, to represent the motor to be tested, under a locked rotor condition. The circuit would also represent an interruption immediately after a start, to check for the most onerous operating condition for the interrupter to generate the highest surges as discussed earlier.

Test results

The test circuit may be connected to the test voltage and then switched to obtain the required oscillograms during switching operations and assess the following:

- Any restrikes and their number
- Amplitude of voltage surge (V_t) generated and
- Their rise time (t_1).

With these data, one can determine the dielectric curve the machine must have when switched with such an interrupting device. This can be compared with the actual dielectric curve of the machine (Figure 17.18) obtained from its manufacturer to decide the compatibility of the interrupting device for the machine or vice versa and the extent of surge protection, if necessary. For more details and results of similar simulation tests, see Central Board of Irrigation and Power (1995).

17.10 Protection of rotating machines from switching surges

For adequate protection of the machine it is essential to know the amplitude, V_t, and the rise time, t_1 of the severest voltage surge (FOW) that may occur on the system. It is recommended that the actual field tests be conducted for large installations according to the recommended simulation test circuits, noted above, to ascertain these surges.

The tests may be conducted on a few ratings with different sizes and lengths of cables to simulate the near actual condition of the installation. One should be more conservative than liberal on cable lengths to obtain safe

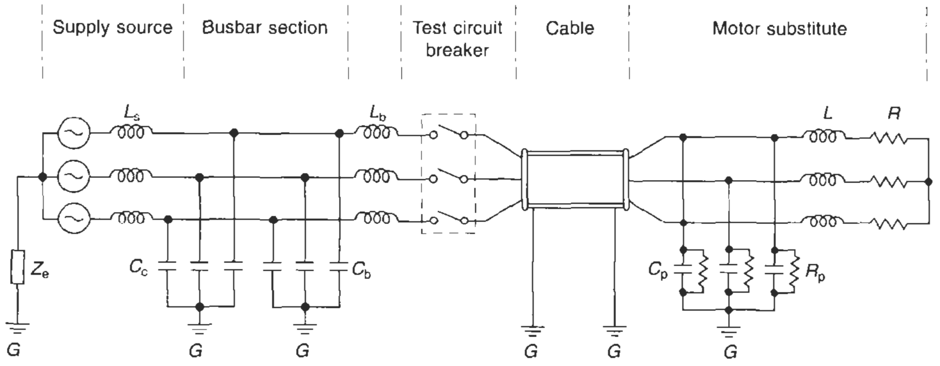

Typical parameters as recommended by CIGRE
Z_e = Grounding impedance = 5 Ω
L_s = Source inductance = 4 mH
C_c = Compensation capacitance = 0.0 or 7.0 μF
C_b = Busbar capacitance = 40 nF
L_b = Busbar inductance = 25 μH
Cable = 100 m screened, radial field 3 X
Unipolar Z_0 = 40 Ω, 95 mm^2 Al unrolled and grounded at both ends.

L = Load inductance
R = Load resistance
C_p = Load parallel capacitance
R_p = Load parallel resistance

Figure 17.19 A simulated test circuit results. The most appropriate impulse level must be chosen, such as 3.5 p.u. for a rise time of 0.2 μs, for the machines to suit the system conditions, according to Table 11.6 for rotating machines, or Tables 13.2 and 14.1 for switchgear assemblies, Tables 32.1(A) and 32.2 for bus systems and Tables 13.2 and 13.3 for all other equipment. It should be noted that steeply rising surges that fall within the range of machine windings and interconnecting cables alone are of relevance and not those that are faster or slower. The steepness of the surge will determine its propagation through the windings and its effects on the coils or the interturns, such as whether the first coil, second coil or the last coil or the first few or the last few turns require protection as discussed earlier. Since the actual installation may differ from that considered in analytical studies, it is possible that the results obtained may differ slightly from those analysed. It is therefore advisable to be more conservative in selecting the amplitude and rise time of the prospective surges. While the machine may be selected with a standard impulse level, and if the probable amplitude and/or the rise time are expected to be more stringent, separate protection must be provided, as discussed later. The general practice has been to insulate all the coils equally, according to the standard impulse level of the machine. The following are preventive measures that can mitigate the effects of such surges:

1 By improving the PF of the interrupting circuit: This is to achieve extinction of the arc, i.e. interrupting the circuit at the first natural current zero, as far as possible, and averting any restrikes. It may be noted that at every current zero the arc due to contact separation extinguishes and there is no conducting path between the contacts until a restrike takes place. This can be achieved in the following ways:
   - Modern interrupting devices have an amount of resistive interruption as a result of appropriate design and choosing the right material for making contacts, (Section 19.2) which will help to moderate the highly inductive interrupting current. Some manufacturers even provide a resistance shunt across the parting contacts, which forms part of the circuit during interruption only, similar to the theory of a surge arrester (Section 18.1).
   - By installing p.f. improvement capacitors to compensate the no-load magnetizing current of the circuit being switched (Section 23.13). These may be installed in the same switching circuit to switch together with the inductive load.

2 In capacitor switching, introduction of an inductor coil (Section 23.11) can contain not only the inrush current but also tame the current phasor to shift closer to the voltage and thus limit the TRV on an interruption.

3 By selecting the rating of the interrupting device as close to the full-load current of the system or machine as possible. An excessive rating than necessary may have tendency towards current chopping.

4 More care needs to be taken when there are a number of such motors connected on the same bus and switched in tandem, tending to multiply the switching effects (Figure 17.20).

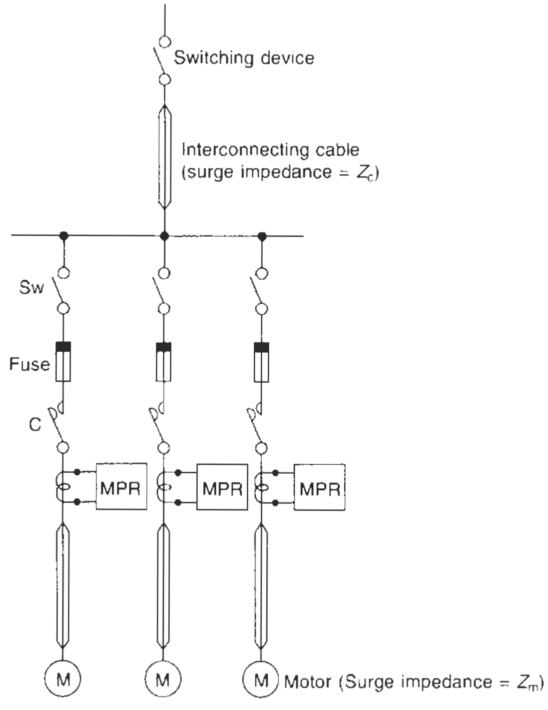

Figure 17.20 A number of motors connected in tandem on a common bus

5 Protection against electrodynamic forces. These are caused by transient currents, such as on faults, and mainly affect the overhangs or the parts of the windings that fall outside the stator slots. These parts are specially braced and strengthened at the time of manufacture.

Since the standard insulation level (BIL) of a machine, equipment or a system is already defined, according to Tables 11.6, 14.1, 32.1(A), 13.2 and 13.3, the machines are accordingly designed for this basic insulation (BIL) only. When the prospective surges are expected to be more severe than this, separate protection becomes imperative. This is particularly important for a rotating machine which, besides being a dry equipment, also has only a limited space within the stator slots and hence has the smallest BIL of all, as is evident from Table 11.6, compared to Tables 14.1, 32.1(A) and 13.2. For its comprehensive protection it can be considered in two parts.

17.10.1 Major insulation area

This is the winding insulation to the body, which is more vulnerable to prospective voltage peaks, V_t, as a result of TRVs. When the TRV exceeds the BIL of the machine, it can be dampened to a safe limit with the use of a surge arrester, say, from peak a_1 to a_2, as illustrated in Figure 17.21. Details of a surge arrester and the procedure for its selection are discussed below. See also Example 17.6. The selection of the arrester will also depend upon the method of star (neutral) formation of the stator's

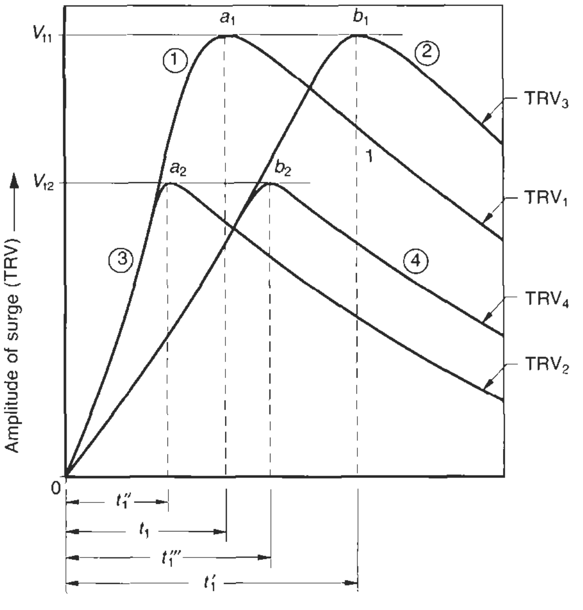

Curve-0a$_1$ – Original steep fronted TRV$_1$, r.r.r.v. = $\frac{V_{t1}}{t_1}$

Curve-0a$_2$ – Damped TRV$_2$ with the use of a surge arrester alone, r.r.r.v. may still be higher than recommended for a particular winding, r.r.r.v. = $\frac{V_{t2}}{t_1''}$

Curve-0b$_1$ – Tamed TRV$_3$ with the use of a surge capacitor alone, amplitude remaining nearly the same as the original wave, r.r.r.v. $\simeq \frac{V_{t1}}{t_1'}$

Curve-0b$_2$ – Tamed and damped TRV$_4$ with the use of a surge capacitor and a surge arrester in parallel, r.r.r.v. = $\frac{V_{t2}}{t_1'''}$. It should be less than the impulse withstand level of the equipment.

Figure 17.21 Taming and damping of a steep-fronted TRV with the use of a surge capacitor in association with a surge arrester

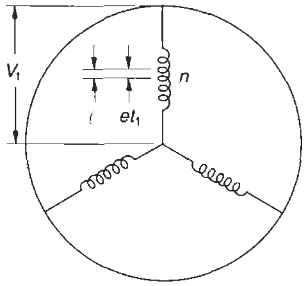

Required condition : $et_1 < et_2$

Where, et_1 = Actual turn to turn voltage that may develop across the machine winding

et_2 = Design voltage of the winding turn to turn.
= V_t/n, where V_t is the permissible or design impulse voltage

n = Number of turns

l = Length of winding per turn

Figure 17.22 Turn-to-turn insulation

star-connected windings. If it is solidly grounded, the reflections will be less severe, as the incident surge will be discharged through the ground and cause less reflections. But when the star point is left isolated, it may cause severe voltage stresses to the end turns of the coil due to repeated reflections. The procedure to select a surge arrester takes account of this.

17.10.2 Minor insulation area

This means the insulation turn to turn ($e_{t1} = V_t/n$, n being no. of turns, Figure 17.22), which is more vulnerable to the steepness of a surge (V_t/t_1). If e_{t2} is the design insulation level of the winding turn to turn then, for a safe condition, $e_{t2} > e_{t1}$. If the design voltage falls short of the arriving surge, surge protection must be provided.

A surge arrester is not able to reduce the steepness (r.r.r.v) of a surge. While motors with single-turn coils may be safe as turn to turn insulation becomes the same as the major insulation with respect to the body, motors with more turns per coil may not remain safe. In such cases the steepness of the arriving surge must be reduced to a safe level. Very fast-rising waves can be tamed (r.r.r.v controlled) with the use of surge capacitors or surge suppressors. Surge capacitors possess a good energy absorbing capacity and can reduce the steepness or diminish the r.r.r.v of a fast-rising wave (FOW) to a safe level, less than the turn-to-turn impulse withstand level of the coil, i.e. less than the steepness of a lightning surge ($t_1 > 1.2$ µs). Normal practice is to tame to 10 µs or so, so that the surge is uniformly distributed over the entire windings and a normal surge arrester, when the amplitude is also higher than prescribed, can protect it safely such as from a_1 to b_1 or a_2 to b_2 , as illustrated in Figure 17.21. Surge capacitors in the range of 0.1–0.25 µF (generally 0.25 µF) are ideal for neutral grounded machines and twice this level for the neutral isolated machines. The multiple reflections at the star point may almost double the voltage at the star point (neutral). They are connected between each motor terminal and ground or on the switching device within the interrupter housing.

17.10.3 Surge capacitors (see also Section 18.8)

A surge capacitor offers a near-open circuit during normal operation (at or near the power frequencies) and a near-short-circuit to the arriving surges at surge frequencies, f_s, while the inductance of the motor windings ($\propto f_s$) will rise rapidly and offer a near-open circuit to the arriving surges. It thus attracts an arriving surge and reduces its steepness due to high 'C' in the circuit parameters, which also reduces both f_s and Z_s, as discussed earlier.

Example 17.4

Consider a surge capacitor of 0.25 µF. Then

$$Z_c = \frac{1}{2\pi \cdot f \cdot C_s}$$

where

Z_c = capacitor impedance in Ω, and

C_s = surge capacitance in F

at a power frequency (50 Hz)

$$Z_c = \frac{1}{2\pi \times 50 \times 0.25 \times 10^{-6}}$$

$$= 12.73 \text{ k}\Omega$$

which is large and will offer a near-open circuit to the power frequency voltage and remain unaffected under normal conditions. For a system voltage and 6.6. kV, it will draw a current of only

$$\frac{6.6}{\sqrt{3} \times 12.73} \quad \text{or} \quad < 0.3 \text{ A}$$

while in the event of a surge voltage, say at 13 kHz, it will become

$$Z_c = \frac{1}{2\pi \times 13 \times 10^3 \times 0.25 \times 10^{-6}}$$

$$\simeq 48.95 \ \Omega$$

which is quite low compared to a very high X_L of the windings and will share the bulk of the transient current and provide the required low effect of Z_s, to reduce the steepness of the TRV. Since they have high-energy ($\frac{1}{2}CV^2$) storing capability capacitors when charged with d.c. can store high energy. A surge has a d.c. component, hence the effectiveness of the surge capacitors. They absorb most of the energy of the arriving surge without changing its amplitude (V_t) and reduce the surge's front steepness and hence the rate of rise (r.r.r.v.), V_t/t_1, similar to the way in which an arrester reduces amplitude (V_t).

It is possible that small motors are protected through the use of surge protective capacitors alone and only large motors are protected through both the surge arrester and the surge capacitor. They also help to dampen the surge transferences due to electrostatic coupling from the higher voltage side of a power transformer to the lower voltage side of it, as a result of a reduced Z_s and a changed and reduced electrostatic ratio $\{C_p/(C_p + C_s + C)\}$ (Section 18.5.2).

These capacitors differ from standard p.f. improvement capacitors. as they are designed to withstand higher test voltages and have a low internal inductance. They should preferably be non-inflammable, synthetic liquid impregnated and provided with a built-in discharge resistance. For specifications refer to VDE 0675 and VDE 0560 III.

Example 17.5

To illustrate the above, consider a surge capacitor of 0.25 μF being used in parallel with a 350 kW, 6.6 kV motor. If the likely FOW is presumed to have an amplitude up to 5 p.u., then the energy this capacitor can absorb

$$= \frac{1}{2} \times 0.25 \times 10^{-6} \ [6.6 \times 10^3]^2 \text{ Joules}$$

$$= 5.4 \text{ Joules}$$

whereas the energy of the FOW will be

$$W_{(FOW)} = \frac{V_t^2}{Z_s} \cdot {}^*2T \text{ Joules} \qquad (17.3)$$

where, $V_t = 5 \times 5.39 = 26.95$ kV

$$\left(1 \text{ p.u.} = \frac{-\sqrt{2}}{\sqrt{3}} \times 6.6 = 5.39 \text{ kV}\right)$$

$Z_s \simeq 4000 \ \Omega$ from Figure 17.7(c).

$T \simeq 20 \ \mu$s for an FOW, Table 18.1

$$\therefore \ W_{(FOW)} = \frac{26.95^2}{4000} \times 2 \times 20$$

$$= 7.26 \text{ Joules}$$

that means the surge capacitor is capable of absorbing most of the energy released by the FOW and taming its steepness (r.r.r.v.) within safe limits. This (energy absorbed) is so much desired also as the arrester, during the FOW discharge, is capable of absorbing only a small energy as calculated below and most of it has to be absorbed by the capacitor only.

Since the amplitude of the FOW is more than permissible (16.2 kV for a normal design and 26.9 kV for a special design motor Table 11.6) it is advisable to dampen the amplitude with the help of a surge arrester. Using a 6 kV station class surge arrester of Example 17.6,

$V_{res(FOW)} = 21.5$ kV from Table 18.8

(It is advisable to select another arrester with a smaller V_{res} than this to make use of a normal motor.)

The energy that will be absorbed by the arrester

$$W_{(arrester)} = \frac{V_t - V_{res}}{Z_s} \cdot V_{res} \cdot 2T \text{ Joules from equation (18.10)}$$

$$= \frac{26.95 - 14}{4000} \times 14 \times 2 \times 20$$

$$= 1.81 \text{ Joules}$$

Total energy absorbed by the arrester and the surge capacitor

$$= 1.81 + 5.4$$

$$= 7.21 \text{ Joules}$$

Leaving only a small part (0.05 Joules) for the machine to absorb, which it should be compable to do in view of its own impulse voltage withstand capability at $V_{res} = 14$ kV.

Note: The arrester has to be a duration class to absorb the long duration (250/2500 μs), high energy switching surges which it has to absorb first before te long duration surges (after restrikes) become steep fronted FOWs. See Section 18.8 for a total surge protection of a motor, which is still higher than 5.4 Joules and will require a surge capacitor of a higher capacity. It is, however, advisable to change the arrester with a $V_{res} < 16.2$ kV.

Illustration

1 Refer to Figure 17.21. Consider a steep-fronted transient wave a_1 with a front time t_1, which has been dampened to a moderate and less severe transient wave a_2 with a front time t_1'' by the use of a surge arrester. The resultant turn-to-turn voltage stress, et_1, for a given length l of the machine windings will be limited to the maximum allowable voltage stress, et_2, of the windings' insulation, et_2 being a design parameter which may be obtained from the manufacturer. The dampened intensity of the switching surge may even make up for an HT machine, having a low insulation level (less than 3 p.u., Table 11.6) suitable for operating on a system that could attain a transient voltage as high as 3–5 p.u. during normal switching, with an extremely low front time t_1. Figures 17.5(a) and (b), for instance, illustrate the oscillograms of a switching surge, with and without a surge arrester. The peak TRV, V_{t1}, in normal switching, which was of the order of 26 kV (4.8 p.u.) for a 6.6 kV

---

*Factor 2 is considered to account for reflections. For more details refer to equation (18.10).

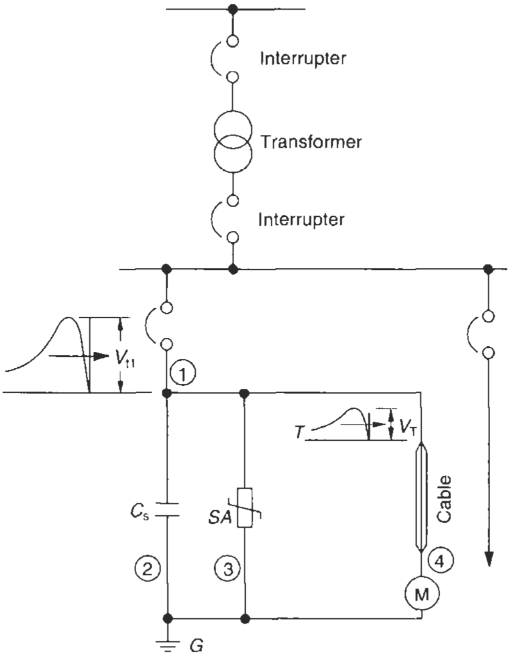

C_s : Surge capacitor –0.1 – 0.25 μF
SA : Surge arrester
① ② ③ ④ : Represent amplitude and steepness of the arriving surge at different locations corresponding to curves of Figure 17.21.

Figure 17.23 Use of a surge capacitor in association with a surge arrester to provide taming as well as dampening effects to a steep fronted TRV

system has been dampened to a V_{t2} of only 13.5 kV (2.5 p.u.) with the application of a surge arrester.

2 If the turn-to-turn voltage, et_1, and the front time, t_1'', so achieved falls within the design parameters, no additional measures would be necessary to further reduce the TRV. However, if it is felt that the dampened voltage, et_1, may exceed the required value of r.r.r.v. during operation, a surge capacitor may also be introduced in the circuit as illustrated in Figure 17.23 to reduce the wave front a_2 to b_2, so that the front time is enhanced to a permissible t_1'''.

Example 17.6
For the selection of an arrester:
Consider the same 6.6 kV motor having the following design parameters:

BIL – Lightning impulse 31 kV
FOW – For a front time 0.2–0.4μs, the motor may be designed for 16.2 kV (3 p.u.). If a higher front of wave voltage withstand capability is required, the motor may be designed and insulated for 26.9 kV (5 p.u.) (Table 11.6, column 3).

Nominal system voltage = 6.6 kV (r.m.s.)
Maximum system voltage = 7.2 kV (r.m.s.)

$$1 \text{ p.u.} = \frac{7.2 \times \sqrt{2}}{\sqrt{3}} = 5.9 \text{ kV}$$

$$\text{Phase to ground voltage } V_g = \frac{7.2}{\sqrt{3}} = 4.2 \text{ kV}$$

$V_{res\ (max)}$	*Protective level*	*BIL of motor*	*Protective margin available*
For a lightning impulse wave of 5 kA (8/20 μs)	17.7 kV	31 kV	175% ∴ OK
For a switching impulse wave of 1.0 kA (30/60 μs)	15.3 kV	[governed by the lightning impulse]	OK
For a FOW (1/2 μs) of 10 kA	21.5 kV	16.2 kV for normal design	Not suitable
		26.9 kV for special design	125% ∴ OK

The distribution system may be considered as solidly grounded having a GFF* of 1.4 and devoid of any other TOVs.†

Therefore, maximum rated voltage = 1.4 × 4.2
= 5.88 kV

Select the nearest voltage rating of a station class surge arrester (see also Section 18.8) from the manufacturer's catalogue, (Table 18.8) as 6 kV which has the following protective levels:

With this particular arrester, the motor has to be specially designed for the higher level of FOW impulse voltage withstand. But the manufacturer can always modify the protective characteristics of the arrester, depending upon the system's requirements. The matter may therefore be referred to the manufacturer for recommendations. The arrester may be fitted with a 0.25 μF surge capacitor in parallel, to reduce the steepness of the FOW (for the arrester of example 17.5, it is 14/0.2 kV/μs) to a safer value.

17.10.4 Surge suppressors

A surge capacitor can only reduce the steepness of a surge, it is incapable of dampening its amplitude. The use of a surge arrester to dampen the amplitude of the surge, in association with a surge capacitor, may require more space, besides being a more expensive arrangement. This is particularly the case when an FOW switching surge in motor switching has only a moderate amount of energy to discharge. A compact and economical alternative is found in a surge suppressor, which makes use of a low-value dampening resistance *R* in series with the surge capacitor *C*. The resistance can now absorb a part of the energy of a high-amplitude surge, dampen it to a desired level and make the *C–R* unit suitable for taming as well as dampening even an FOW surge. The combination of *C* and *R* is appropriately termed a surge suppressor. Figure 17.24(a) shows a general arrangement of such a suppressor, while the power circuit diagram illustrated in Figure 17.24(b) is almost a replica of a non-linear resistor type surge arrester, discussed in Section 18.1.1 and shown in Figure 18.1(a). The non-linear resistor NR of Figure 18.1(a), is now replaced by *C*. The dampening resistor *R* of the surge suppressor is able to provide the arriving

---

*GFF = Ground fault factor (Section 20.6).
†TOV = Temporary overvoltage.

Figure 17.24(a) *C–R*-type surge suppressor

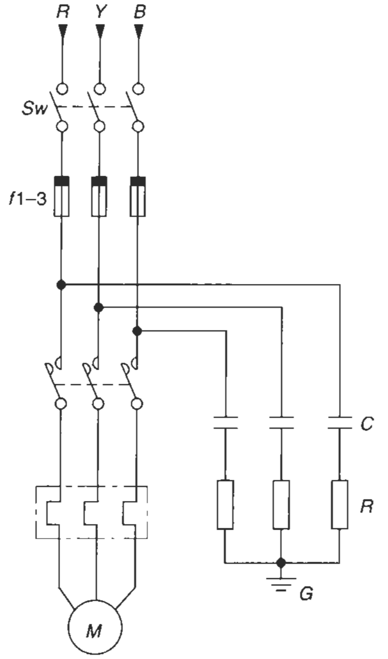

Figure 17.24(b) Typical power circuit of a *C–R*-type surge suppressor

surge, a low resistance path, and a means of absorbing the excess energy of the surge to dampen it to a required level while the surge capacitor arrests the steepness of the surge and reduces it to a desired r.r.r.v.

The design of the *C–R* combination maintains a negligible level of leakage current through the suppressor in healthy conditions (to contain resistance loss). It is easily achieved, as *C* provides a near-open circuit in these conditions and permits only a very small leakage current to flow through it.

A *C–R* suppressor also helps to reduce the surge impedance, Z_s, of the circuit and thus limits the amplitude of V_t as discussed in Section 17.8.

Note

Since a surge capacitor or a *C–R* combination surge suppressor operates only at very high frequencies, such as those related to an FOW, they maintain a near-open circuit for the arriving long-duration switching surges. They are thus required to handle only a moderate amount energy of an FOW and hence are suitable for such duties.

17.10.5 Setting fast-responding relays

No system is permitted to trip on the occurrence of a momentary disturbance, such as by travelling surges of any kind. To overcome this:

- The motor protection relay, as discussed in Section 12.5, is generally provided with a delay feature to bypass these transients and delay the tripping by two or three cycles.
- The same is true for an overcurrent or a ground fault relay when used in circuits that are prone to surges.

17.10.6 Conclusion

Switching of an induction motor was typical of all to illustrate the pheno-menon of switching surges in an inductive circuit. The situation would remain the same when switching a power system, transformer or power cables also, in all conditions of loading (fully loaded, under loaded or on no load). Switching surges in a capacitor circuit is discussed in Section 23.5.1 with the likely levels of voltage surges. Below we discuss the insulation coordination and protection of other machines and systems.

17.11 Theory of surge protection (insulation coordination)

The insulation of a current-carrying system, machine or component is to provide it with the required insulation level (BIL) to withstand system voltages during normal operation, as well as temporary overvoltages (TOV) and momentary voltage surges, up to a certain level, during system disturbances. A safety margin is built into their equipment by the manufacturers according to Tables 11.6, 14.1, 32.1(A), or 13.2 and 13.3 as standard practice to sustain such voltages without failure or rupture of the insulating system. Repeated application of such voltages, even if they are below the BIL of the insulating system, or longer duration of overvoltages, may lead to failure or rupture of the insulating system as a result of insulation fatigue. It is possible that in operation, TOVs or voltage surges may exceed the safe (prescribed) power frequency or impulse withstand voltages (BIL) respectively, of the power system or the terminal equipment. For the recommended safe insulation levels of different equipment, refer to tables mentioned above.

For instance, when lightning of, say, a nominal discharge current of 10 kA strikes a 400 kV (r.m.s.) overhead line, having a surge impedance of 350 Ω, then two parallel waves will be produced each of amplitude 10 × 350/2 or 1750 kV which may be more than the impulse withstand level of the system and cause a flashover between the conductors and the ground, besides damaging the line insulators and the terminal equipment (Table 13.2). It is therefore imperative that the system is protected against such eventualities.

Surge protection, therefore, becomes essential when it is felt that the surges generated during an operation at a particular installation may rise beyond the permissible impulse withstand capacity (BIL) of the equipment. A system that is prone to frequent occurrences of temporary overvoltages. Induction motors for instance, which conform to the impulse withstand levels prescribed for this machine according to Table 11.6 may be supplemented by a surge arrester or suppressor, when it is felt that the amplitude or steepness (or both) of the surges in operation may exceed the prescribed levels. Coordination of insulation of the equipment to be protected with that of the level of the protective device, which may be a switchgear or a lightning arrester, is called insulation coordination. This would depend upon the type of installation, such as the type of switching device and the length of the interconnecting cables. For an assessment of the possible magnitudes and durations of the TOVs and the prospective amplitudes and steepnesses of the lightning or switching surges, particularly at critical installations such as a generating station or a large switchyard, it is essential to carry out system transient analysis (TNA) as noted later.

Where this is not necessary, it can be assessed by the equipment's exposure to such TOVs and surges and thus determine the appropriate level of BIL. IEC 60071-2 provides guidelines for the most appropriate surge protection scheme and is discussed in Section 18.6.

Relevant Standards

IEC	*Title*	*IS*	*BS*
60060-1/1989	High voltage test techniques. General definitions and test requirements	2071-1/1993	BS 923-1/1990
60071-1/1993	Insulation coordination – Definition, principles and rules	2165-1/1991, 2165-2/1991	BS EN 60071-1/1996
60071-2/1996	Insulation coordination – Application guide	3716/1991,	BS EN 60071-2/1997
60470/1974	High voltage a.c. contactors	9046/1992	BS 775-2/1984
60947-4-1/1990	Contactors and motor starters. Electromechanical contactors and motor starters	13947-4-1/1993	BS EN 60947-4-1/1992
61024-1/1990	Protection of structures against lightning – General principles	2309/1989	BS 6651/1992, DD ENV 61024-1/1995
–	Capacitors for surge protection for systems 0.65 kV to 33 kV	11548/1991	–

Relevant US Standards ANSI/NEMA and IEEE

IEEE.4/1995	Standard techniques for HV testing
ANSI/IEEE 1313.1/1996	Insulation Coordination, Definitions, Principles and Rules

Notes

1 In the tables of Relevant Standards in this book while the latest editions of the standards are provided, it is possible that revised editions have become available. With the advances of technology and/or its application, the updating of standards is a continuous process by different standards organizations. It is therefore advisable that for more authentic references, readers should consult the relevant organizations for the latest version of a standard.

2 Some of the BS or IS standards mentioned against IEC may not be identical.

3 The year noted against each standard may also refer to the year of its last amendment and not necessarily the year of publication.

List of formulae used

Rate of rise of recovery voltage

$$\text{r.r.r.v.} = \frac{V_t}{t_1}\ \text{kV}/\mu\text{s}$$

V_t = peak value of the voltage surge in kV
t_1 = rise time in μs

$$f_s = \frac{1}{2\pi\sqrt{LC}}\ \text{in Hz} \qquad (17.1)$$

f_s = surge frequency in Hz
L = leakage inductance of the circuit in henry (H)
C = lumped leakage capacitance of the circuit in farad (F)

Surge impedance

$$Z_S = \sqrt{\frac{L}{C}}\ \Omega \qquad (17.2)$$

Surge energy

$$W = \frac{V_t^2}{Z_S} \times t \times 10^3\ \text{kW-s or kJ} \qquad (17.3)$$

W = energy released in kW-s or kJ
V_t = prospective crest of the surge in kV
Z_s = surge impedance of the power system and the terminal equipment in Ω
t = duration for which it exists (in seconds)

Velocity of propagation

$$U = \frac{1}{\sqrt{L_0 C_0}}\ \text{km/s} \qquad (17.4)$$

U = velocity of propagation in km/s
L_0 = line or conductor mutual inductance in H/km
C_0 = leakage capacitance of the same medium in F/km

Per unit voltage

$$1 \text{ p.u.} = \sqrt{2} \cdot \frac{V_1}{\sqrt{3}} \qquad (17.5)$$

Current zero

This is defined by $i = 0$, where

$$i = I_{\max} \sin \omega t \qquad (17.6)$$

$i =$ instantaneous current component at any instant
$I_{\max} =$ peak value of the current
$\omega =$ angular velocity $= 2\,\pi f$
$t =$ time

Further reading

1 Adjaye, R.E. and Cornick, K.J., 'Distribution of switching surges in the line – end coils of cable connected motors', *IEE Transactions, Electric Power Applications*, **2** No. 1, 11–21 (1979).
2 Andra, W. and Sperling, P.G., 'Winding insulation stressing during the switching of electrical machines', *Siemens Review*, **43**, No. 8, 345–350 (1976).
3 Beeman, D. (ed.), *Industrial Power Systems Handbook*, McGraw-Hill, New York.
4 Central Board of Irrigation and Power, 'Re-switching transients and their effects on the design and operation of large induction motor drives for power station auxiliaries', New Delhi, India, March (1995).
5 Cigre Working Group 13.02, 'Proposal of a test circuit to simulate switching of small inductive currents in high voltage motor circuits', *Electra*, No. 75, March (1981).
6 Cormick, K.S. and Thompson, T.R., 'Steep fronted switching voltage transients and their distribution in motor windings', Part I – System measurements of steep fronted switching voltage transients, Part II – Distribution of steep fronted switching voltage transients in motor windings, *IEEE Proceedings* **129**, Parts A and B, No. 2, March (1982).
7 Ganz, A. and Jakob, R., 'Switching high voltage motors with SF_6 self-extinguishing circuit breakers', *Brown Boveri Review*, 710–714, November (1979).
8 Gibbs, J.D., Koch, D., Malkin, P. and Cornick, K.J., 'Comparison of performance of switching technologies on a Cigre motor simulation circuit', *IEEE Transactions on Power Delivery*, **4**, No. 3, July (1989).
9 Golde, R.H., 'Lightning surges on overhead distribution lines caused by direct and indirect lightning strikes', *AIEE Transactions (Power Apparatus and System)*, 437–447, June (1959); IEC 56 – HV AC Circuit Breakers.
10 Greenwood, A., *Electrical-Transients in Power Systems*, John Wiley, New York.
11 Insulation Sub-committee, Rotating Machinery Committee, 'Impulse voltage strength of AC rotating machines', *IEEE Transactions on Power Apparatus and Systems*, **PAS-100**, No. 8, August (1981).
12 Working Group 13.02 of Study Committee 13 (Switching Equipment), 'Interruption of small inductive currents', *Electra*, No. 75, March (1981).
13 Lyle, A.G., *Major Faults on Power Systems*, Chapman and Hall, London (1952).
14 Nailen, R.L., 'Transient surges and motor protection' *IEEE Transactions on Industry Applications*, **1A** No. 6, 15, November/December (1979).
15 Okokura, K.Y., 'Multiple restriking voltage effect in a vacuum circuit breaker on motor insulation', IEEE Paper 80, SM 697-3 (1980).
16 Pretorius, R.E. and Eriksson, A.J., 'Field studies of switching surge generation in high voltage vacuum contactor controlled motors', *IEEE Conference Publication* 210, 54–64 (1982).
17 'Protection of motor from switching surge', *IEEE Transaction*, **PAS-93**, No. 5, 1474 (1974).
18 'Results of an investigation on the overvoltages due to a vacuum circuit breaker when switching an H.V. motor', *IEEE 85 SM 370-2* (1985).
19 Slamecka, M.E., 'For surge impedance of motors: interruption of small inductive currents', Cigre Working Group 13.02, *Electra*, No. 72, 73–103, October (1980).
20 Slamecka, M.E., 'Interruption of small inductive currents' Working Group 13.02 of Study Committee 13 (Switching Equipment), *Electra*, No. 95 (1983).
21 'Switching over voltages phenomena in MV switchgears', Workshop on MV Switchgear and CPRI, 1–43, (1987).
22 Wright, M.T., Yang, S.J. and McLeay, K., 'The influence of coil and surge parameters on transient interturn voltage distribution in stator windings', *IEE Proceedings*, **130**, Part B, No. 4, 257–264, July (1983).

18

Surge Arresters: Application and Selection

Contents

18.1 Surge arresters

When surge protection is considered necessary, surge arresters* may be installed on or near the equipment being protected. This is a device that limits the high TVs (transient voltages) generated during a system disturbance by diverting the excessive part of it to the ground and reducing the amplitude of the transient voltage wave across the equipment to a permissible safe value less than the impulse withstand level of the equipment (Tables 11.6, 14.1, 32.1(A), 13.2, and 13.3. The rate of rise (r.r.r.v.) remains the same, i.e.

$$\frac{V_{t1}}{t_1} = \frac{V_{t2}}{t_1''} \text{ (curves } a_1 \text{ and } a_2 \text{ of Figure 17.21)}$$

thus shielding the connected equipment from such dangerous voltage surges. This is achieved by providing a conducting path of relatively low surge impedance between the line and the ground. The discharge current to the ground through the surge impedance limits the voltage to the ground. During normal service this impedance is high enough to provide a near-open circuit. It remains so until a surge voltage occurs and is restored immediately after discharge of the excess surge voltage.

Corollary

An arrester can be considered a replica of an HRC fuse. While a fuse is a current limiting device and protects the connected equipment by limiting the prospective peak fault currents, I_{SC} (Figure 12.18) an arrester is a voltage limiting device and protects the connected equipment by limiting the prospective peak surge voltage, V_t (curve 3, Figure 17.21).

Arresters or diverters are generally of the following types and the choice between them will depend upon the power frequency system voltage, characteristics of the voltage surges and the grounding system, i.e.

(i) Gapped or conventional, and
(ii) Gapless or metal oxide.

18.1.1 Gapped surge arresters

These are generally of the following types:

1 **Expulsion** These interrupt the follow current by an expulsion action and limit the amplitude of the surge voltages to the required level. They have low residual or discharge voltages (V_{res}). The arrester gap is housed in a gas-ejecting chamber that expels gases during spark-over. The arc across the gap is quenched and blown-off by the force of the gases thus produced. The enclosure is so designed that after blowing off the arc it forcefully expels the gases into the atmosphere. The discharge of gases affects the surroundings, particularly nearby equipment. The gas-ejecting enclosure deteriorates with every operation and, therefore, has only a limited operating life. Moreover, these types of arrester are of specific ratings and an excessive surge than the rated may result in its failure. They are now obsolete in view of their frequent failures and erratic behaviour and the availability of a more advanced technology in a metal oxide arrester.

2 **Spark gap** These have a pair of conducting rods with an adjustable gap, depending upon the spark-over voltage of the arrester. Precise protection is not possible, as the spark-over voltage varies with polarity, steepness and the shape of the wave. These arresters are also now obsolete for the same reasons.

3 **Valve or non-linear resistor** In this version, a non-linear SiC resistance is provided across the gap and the whole system works like a preset valve for the follow current. The resistance has an extremely low value on surge voltages and a very high one during normal operations to cause a near-open circuit. It is now easier to interrupt the follow currents.

A non-linear resistor-type gapped surge arrester may generally consist of three non-linear resistors (NR) in series with the three spark gap assemblies (see Figure 18.1(a)). The resistance decreases rapidly from a high value at low currents to a low value at high currents, such that $RI \simeq$ constant (Figure 18.1(b)). Hence, V-I is an almost flat curve, as illustrated in Figure 18.1(b). Thyrite* and Metrosil* are such materials. The purpose of non-linear resistors is to permit power frequency follow currents, after the clearance of surge voltages, while maintaining a reasonably low protective level (V_{res}). Across the spark gaps, known as current limiting gaps, are provided high-value resistors (HR) backed up with HRC fuses. The non-linear resistors have a very flat V-I curve, i.e. they maintain a near-constant voltage at different discharge currents. The flatness of the curve provides a small residual voltage and a low current. When the switching surge voltage exceeds the breakdown voltage of the spark gap, a spark-over takes place and permits the current to flow through the non-linear resistor NR. Due to the non-linear characteristics of the resistor, the voltage across the motor terminals is limited to approximately the discharge commencing voltage (V_{res}), which is significantly below the 3–5 p.u. level. It may be noted that the use of resistor across the spark gap stabilizes the breakdown of the spark gap by distributing the surge voltage between the gap and the non-linear resistor. Figures 17.5(a) and (b) are oscillograms illustrating the effect of a surge arrester in arresting the surge voltages caused during a switching operation or a lightning strike.

The current limiting gaps, as noted above, in series with the non-linear resistors make it possible to adjust the protection level of the surge arrester for different values of discharge currents. They also help to maintain

---

*Basically they are surge diverters but conventionally are called arresters upto 245 kV lightening surges and beyond 245 kV switching surges are found to be more severe, Section 18.3. It is customary, therefore, to call an arrester up to 245 kV a lightning arrester and beyond 245 kV a surge arrester. For ease of reference, we have described them as surge arresters or only arresters for all types.

*Thyrite is a brand name from General Electric, USA.
Metrosil is a brand name from a GEC company in the UK.

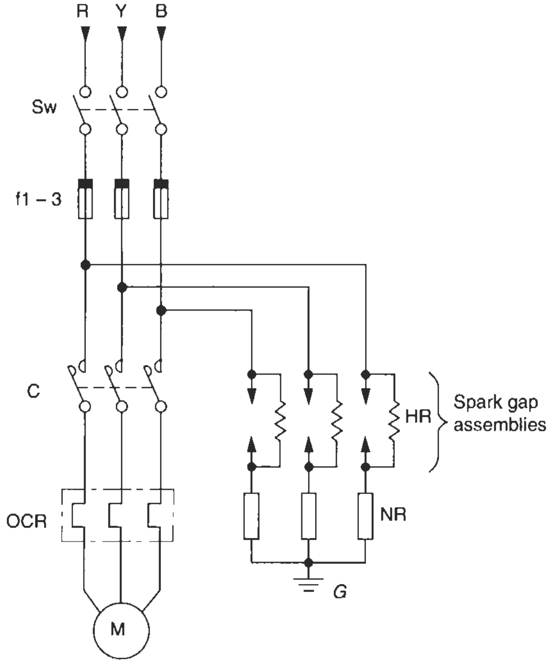

Figure 18.1(a) A typical power circuit of a non-linear resistor-type surge arrester

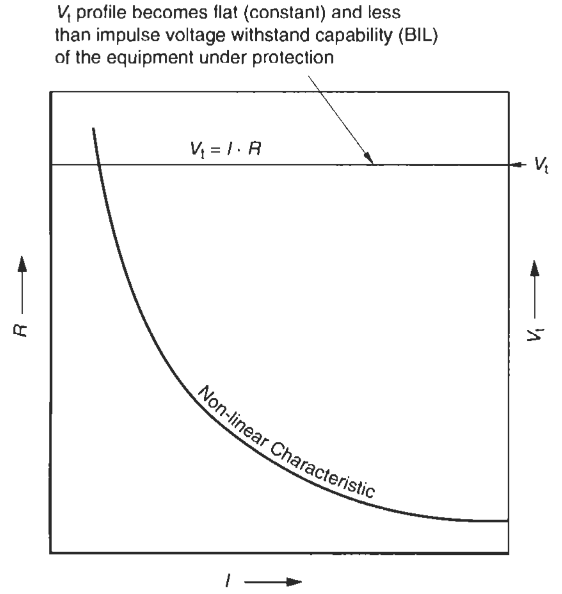

Figure 18.1(b) Characteristic of a non-linear resistor

a near-constant voltage at around the switching surge or lightning surge spark-over voltages during the flow of surge currents while clearing a surge.

18.1.2 Gapless surge arresters

From the above it is evident that material for non-linear resistance used in the manufacture of an efficient surge protection device must offer the least impedance during a discharge. This is to provide a free flow to the excessive discharge current to the ground, on the one hand, and to draw a negligible current under normal system conditions, to make it a low-loss device, on the other. The alternative was found in ZnO, ZnO is a semi-conductor device and is a ceramic resistor material constituting ZnO and oxides of other metals, such as bismuth, cobalt, antimony and manganese. Since the content of ZnO is substantial (around 90%) it is popularly known as a ZnO or metal oxide surge arrester. It has no conventional spark gap and has excellent energy absorption capability. It consists of a stack of small ZnO disks (Figure 18.2(a)) in varying sizes and cross-sections, enough to carry the discharge

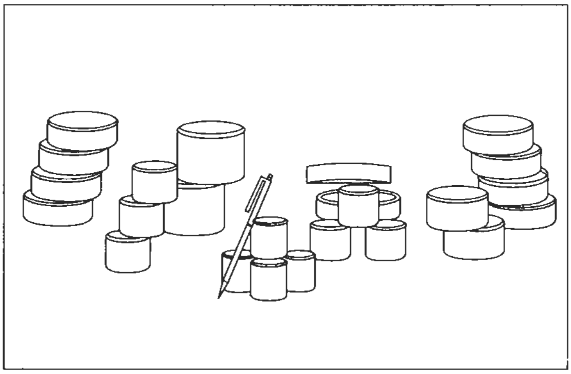

Figure 18.2(a) ZnO blocks and their small sizes

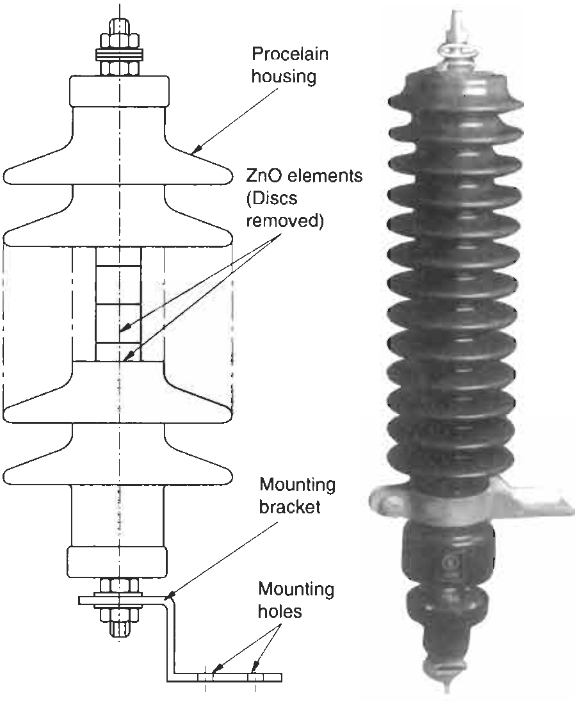

Figure 18.2(b) Distribution class surge arrester

currents, mounted in series in a sealed porcelain housing (Figure 18.2(b)). The surface area (size) of disk can be raised to make it capable of absorbing higher energy levels. The design is optimized to minimize the power loss. Figure 18.3(a)–(c) show the general arrange-ments of a few types and sizes of gapless surge arresters.

Under rated system conditions, its feature of high non-linearity raises its impedance substantially and diminishes the discharge current to a trickle. Under rated conditions, it conducts less than 1 mA (Figure 18.4(a)), while during transient conditions it offers a very low impedance to the impending surges and thus raises the discharge current and the discharge voltage. However, it conducts only that discharge current which is essential to limit the amplitude of the prospective surge to the required protective level of the arrester. The housing is sealed at both ends and is provided with a pressure relief valve to vent high-pressure gases, such as those caused by heavy currents during a voltage surge or a fault within the arrester, and to prevent an explosion in the event of a housing failure.

18.2 Electrical characteristics of a ZnO surge arrester

In view of the limitations in spark gap technology, as discussed earlier, the latest practice is to use gapless surge arresters. Accordingly, the following text relates to gapless arresters only. For details on gapped surge arresters refer to ANSI/IEEE–C-62.1, ANSI/IEEE-C-62.2 and IEC 60099-5, as noted in the Relevant Standards.

ZnO blocks have extremely non-linear, current-voltage characteristics, typically represented by

$$I = K \cdot V^{\alpha} \qquad (18.1)$$

where the conductance (1/*R*) in the conventional formula

$$\left(I = \frac{1}{R} \cdot V \right)$$

is replaced by *K*, which now represents its geometrical configuration, cross-sectional area and length, and is a measure of its current-carrying capacity. α is a measure of non-linearity between *V* and *I*, and depends upon the composition of the oxides used. Typical values are

In SiC – 2 to 6

In ZnO – it can be varied from 20 to 50.

By altering α and *K*, the arrester can be designed for any conducting voltage (V_{res}) and nominal current discharge (I_n). V_{res} and I_n define the basic parameters of a surge arrester, as discussed later. Figures 18.4(a) and (b)

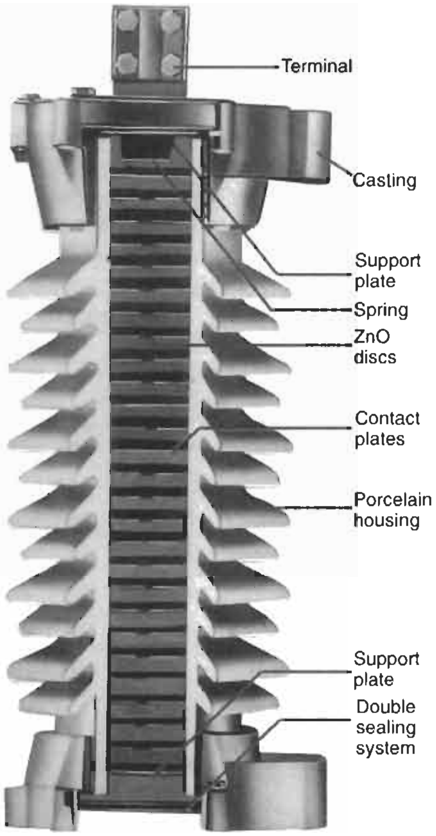

Figure 18.3(a) Sectional view of a metal oxide surge arrester (Courtesy: W.S. Industries)

Figure 18.3(b) A 400 kV surge arrester (Courtesy: Elspro (International))

Figure 18.3(c) 12-550 kV zinc oxide surge arresters (Courtesy: Crompton)

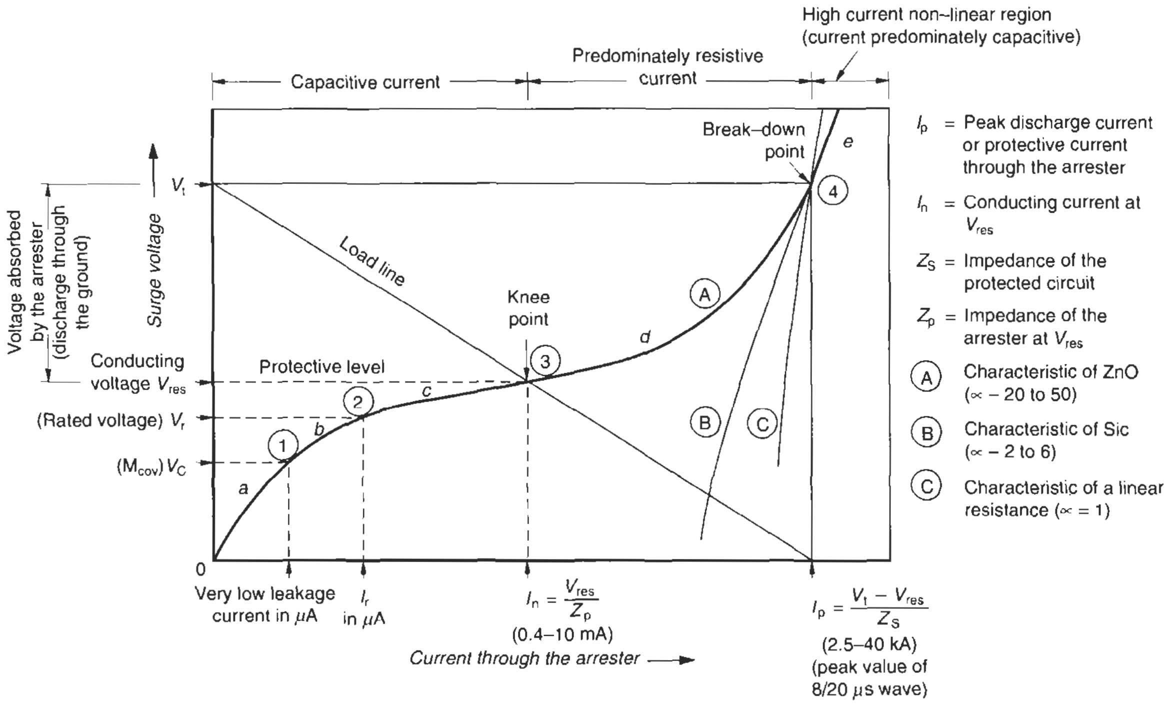

Figure 18.4(a) Characteristics of a ZnO block

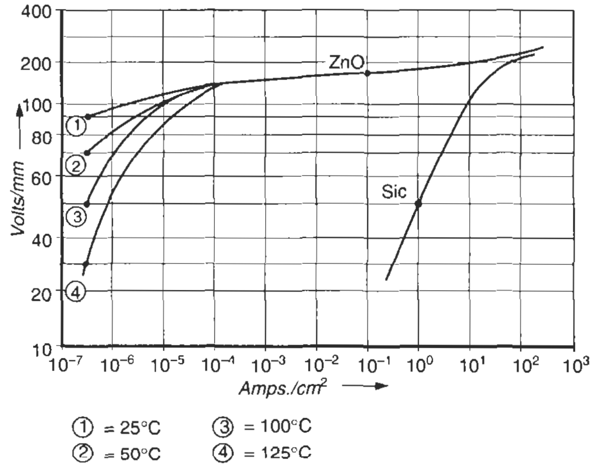

Figure 18.4(b) V–I characteristics of a ZnO block

illustrate typical electrical characteristics of a ZnO arrester, suggesting that in the event of a surge voltage, with a prospective amplitude V_t, its resistance will fall rapidly, and it will absorb much of the current and energy up to $(V_t - V_{res})$ discharged by the voltage surge. The rest, i.e. the conducting voltage (V_{res}) depending upon the arrester's protection level, will appear across the arrester and the equipment it is protecting. It has an excellent energy absorption capability. Some of its basic characteristics according to Figures 18.4(a) and (b), are noted below.

18.2.1 Electrical representation of a ZnO element

A ZnO element basically represents a capacitive leakage circuit. In its leakage current range it may be electrically represented as shown in Figure 18.5, where I_{ZnO} is the leakage current, capacitive in nature, and I_c and I_r its capacitive and loss components, respectively. The success of an element will depend upon its low loss-component, which would mean a lower loss during continuous

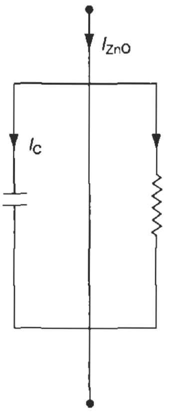

Note I_r would consist of resistive as well as 3rd harmonic component.

Figure 18.5 A ZnO element

operation, on the one hand, and a lower temperature rise of the element, on the other.

18.2.2 Maximum continuous operating voltage (MCOV), V_c (point 1 on the curve of Figure 18.4(a))

This is the power frequency operating voltage that can be applied continuously ($\geq$ 2 hours) across the arrester terminals without a discharge. It continuously draws an extremely low leakage current, I_{ZnO}, capacitive in nature, due to ground capacitance. The current is in the range of a few μA. Therefore maximum continuous operating voltage

$$V_c = \frac{V_m}{\sqrt{3}} \text{ (phase to neutral)}$$

18.2.3 Rated voltage, V_r (point 2 on the curve of Figure 18.4(a))

This is the voltage for which the arrester is designed. The arrester can withstand this voltage without a discharge for a minimum 10 s under continuously rated conditions (when the arrester has reached its thermal stability), indirectly indicating an in-built TOV capability of 10 s. Now it also draws a current, capacitive in nature, in the range of a few mA. The lower this current, the lower will be the loss and the heat generated during an overvoltage and hence better energy absorption capability.

Below the knee-point, in the MCOV and TOV regions particularly, the V-I characteristic (Figure 18.4(b)) is sharply drooping with the temperature rise, causing a higher leakage current. It is a deterrent to otherwise good performance for it means higher losses and heat under normal as well as TOV conditions. Although this very low level has been achieved, research and improve-ment in the formation of a ZnO compound is a continuous process by leading manufacturers. It aims to optimize the use of this material for a still better performance by attempting to flatten the droop as far as possible.

18.2.4 Reference voltage (point 3 on the curve of Figure 18.4(a))

This is a voltage close to the knee-point of the characteristic. It is a point where it commences its conduction and draws a current, resistive in nature, in the range of a few mA. Typical values are 0.4–10 mA.

The design and configuration of ZnO disks is such that this resistive current is more than the capacitive leakage current it draws in the MCOV region.

18.2.5 Temporary overvoltage (TOV) (Figure 18.4(a))

The operating point 1 temporarily shifts to near point 3. Now also the current is also resistive and in the range of a few mA.

18.2.6 Transient voltages (Figure 18.4(a))

The operating point shifts to near point 4 and beyond on the curve. It may conduct a current of 2.5–20 kA or more, during a very fast-rising voltage surge.

18.2.7 Protective level (Figures 18.4(a) and (b)

For TOVs this is determined by its low current region (d) of less than 1A and for prospective transient voltages by its high current region (e) of 2.5–20 kA (8/20 μs current surge). In this region the arrester must have a high capability for energy absorption.

The ZnO protective characteristic curves of Figure 18.4(b) also suggest that these protective characteristics remain unaffected by variations in operating temperatures except in very low current ranges is that and immaterial.

18.3 Basic insulation level (BIL)

BIL is the basic insulation level of equipment. When the system TOV or voltage surges exceed this level, the equipment may yield. In the latest international and national standards it is defined as follows:

1 For systems 1 kV< V_m $\leq$ 245 kV.
   - (i) Rated lightning impulse withstand level (LIWL)
   - (ii) Rated short time power frequency dielectric strength.
   - (iii) Prospective steep-rising TRVs (FOWs) that may be caused during a switching operation, as discussed in Section 17.7*.

   For motors, switchgears and bus systems see Tables 11.6, 13.2, 14.1 and 32.1(A) and for other equipment Table 13.2. For more clarity refer to Section 17.1.

2 For systems having V_m > 300 kV to 765 kV:
   - (i) Rated lightning impulse withstand level (LIWL)
   - (ii) Rated switching impulse withstand level (SIWL)
   - (iii) Prospective steep-rising TRVs (FOWs) that may be caused during a switching operation as noted above or during a fast bus reclosing (Section 17.4) particularly with the line trapped charge. Refer to Table 13.3*.

---

*There is no rated withstand levels specified in these standards for such surges. This will depend upon the system parameters as noted later and must be specified by the user to the equipment manufacturer.

Equipment may be designed for more than one BIL values as noted in the various tables referred to above for motors, switchgears and other equipment. The choice of BIL for equipment for a particular application will depend upon the extent of exposure the equipment may be subject to in normal service and the security level required by the system and the surge protection. For more details refer to Section 13.4.1(3).

It is advisable to select the lower value of the BIL wherever possible, to save on the cost of equipment, particularly when surge protection is being provided. Equipment, however, exposed more to such onslaughts may be selected with a higher BIL. Examples are those mounted some distance from the surge arrester and have a higher protective distance leading to more reflections and transference of surges.

The types of surges referred to above are defined in Table 18.1.

18.4 Protective margins

On the BIL discussed above a suitable protective margin is considered to provide sufficient safety to the protected equipment against unforeseen contingencies. IEC 60071-2 has recommended certain values to account for these and they are given in Table 18.2.

$$\text{Protective margin} = \frac{\text{BIL of the equipment}}{\text{Impulse protection level of the arrester } (V_{\text{res}})} \qquad (18.2)$$

The protection level of an arrester, V_{res}, is a function of the magnitude of arrester discharge current (I_n), and the time to peak of the surge (t_1), and is influenced by the following.

18.4.1 Steepness (t_1) of the FOW

The protection level of the arrester diminishes with the steepness of the wave. As t_1 falls, V_{res} of the arrester rises, leaving a smaller protection margin across the protected equipment. Refer to the characteristics of an arrester as shown in Figure 18.7, for a 10 kA, 8/20 μs impulse wave. For a front time of, say, 0.5 μs, it will have a V_{res} of approximately 118% of its rated V_{res} at 8 μs, and hence will reduce the protection margin as in equation (18.2).

Table 18.1 Defining a surge

Predominant surge	*Maximum system voltage* V_m	*Power system*	*Voltage shape*	*Equivalent current shape at which the arrester is tested*[2]	*BIL of the equipment*
Lightning	> 1 kV–245 kV	Secondary transmission or primary distribution	1.2/50 μs	8/20 μs	See Section 18.3
Lightning	> 245kV[1]	Mainly transmission	1.2/50 μs	8/20 μs	See Section 18.3
Switching			250/2500 μs (total time $t_2 \simeq 2750$ μs, Figure 17.2(b)	30/60 μs	
FOW (switching)	> 245 kV	Mainly transmission	Rise time, t_1 (Figure 17.3) may be less than 0.1 μs but total time up to 3000 μs and surge frequency 30 kHz to < 100 MHz	1/20 μs	Note 3

Notes

1 A lightning strike may commence at around 10^2 to 10^6 Volts (1000 kV) between the clouds and the ground. By the time it reaches the ground, it loses a part of its intensity. Although it may still be around 1000 kV at ground level, it is possible that sometimes switching surges at an EHV system above 245kV are more severe than a lightning surge, the more so because the amplitude of a switching surge rises with the rise in system voltage, while a lightning strike remains nearly constant irrespective of the system voltage. For these voltages, the national and international standards have prescribed separate impulse withstand levels as noted in Table 13.3 for switching as well as lightning surges. They have also classified these severities in categories 1, 2 and sometimes 3, depending upon the extent of system exposure to lightning as noted in Section 13.4.1(3).

2 In a surge arrester, it is easier to assess the severity of a voltage wave through an equivalent current wave, but it is found that the characteristic of an equivalent current wave is not exactly identical to the required voltage wave. It is noticed that the time of rise of a voltage wave is generally shorter than its equivalent current wave, and hence more severe than the current wave. The reason is the non-uniform distribution of the current through the cross-section of the conductor, because of skin effect and discontinuities as discussed earlier. Refer to Figure 18.6 explaining this. To overcome this deficiency, the actual time of rise of the test current surges, while simulating the characteristics in a laboratory, is slightly shortened (for an 8/20 μs wave, the test wave rise time will be slightly less than 8 μs), to ensure the same severity of the test current wave as the actual voltage wave. A surge arrester is required to clear successfully all the three types of voltage surges as prescribed. It is imperative to ensure that the selected arrester is capable of clearing all such voltage surges with the same ease and safety. Accordingly, protective curves are established by the arrester manufacturers over a wide range of likely surges, in terms of lightning, switching and FOWs. They provide those to the user for ease of arrester selection (Figure 18.7).

3 For steep-rising waves (FOWs), no steepness or impulse withstand level is prescribed in these standards, as both the rise time and amplitude of such waves cannot be predefined. They will depend upon various system parameters, such as grounding method, cable or line length, other equipment installed on the system, their surge impedances, switching conditions (current chopping and restrike of interrupting contacts etc.) and the trapped charge, such as on a fast bus transfer etc. The choice of impulse level for a particular fast-rising wave for equipment to be exposed to such transients is a matter of system study (such as TNA or EMTP, Section. 18.5). The user must define these for the equipment manufacturer.

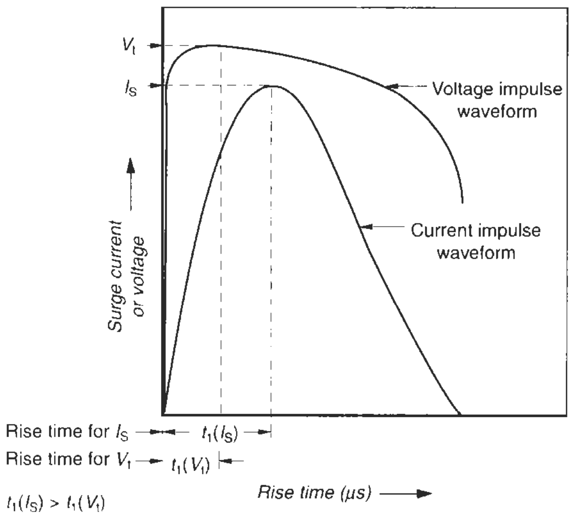

Figure 18.6 Arrester voltage and current oscillograms for 10 kA, 8/20 μs current impulse test

18.4.2 Discharge or coordinating current (I_n)

V_{res} rises with an increase in the discharge current through the arrester and vice versa (see Figure 18.7 having its rated V_{res} on the 10 kA characteristics at 8 μs). For a 15 kA discharge current, for instance, V_{res} will rise further to approximately 1.18 for an FOW of 0.5 μs, and reduce its protection margin further.

The arrester manufacturer will provide the protection characteristics for different discharge currents I_n and front times, t_1, for each type of arrester to facilitate the user make an easy selection of the arrester.

Table 18.2 Recommended protection margins

Voltage range	V_m	*Recommended margins*		
	KV	*For swtiching surges*	*For lightning surges*	*For FOWs*
I Table 13.2	≥ 3.6–245	Decided by the lightning surge, which is more severe	1.05	1.15
II Table 13.3	300–765	1.15	1.05	1.15

18.4.3 Margin for contingencies

An additional protection margin may be considered for the contingencies noted below, depending upon the criticality of a system or its susceptibility to overvoltages:

1. Higher overvoltages than considered, during an actual fault, say, because of unfavourable grounding conditions.
2. Non-simultaneous opening (Section 19.7) or closing of the interrupting poles (Section 17.7.2).
3. More than two overvoltages occurring at the same instant such as a load rejection associated with ground and phase faults.

It is, however, recommended to select the smallest arrester as this will provide the greatest margin of protection for the insulation. A higher rating (kJ) of the arrester may prolong its life but may reduce the margin of protection. It is therefore better to strike a balance between the life of the arrester and the protection of the equipment.

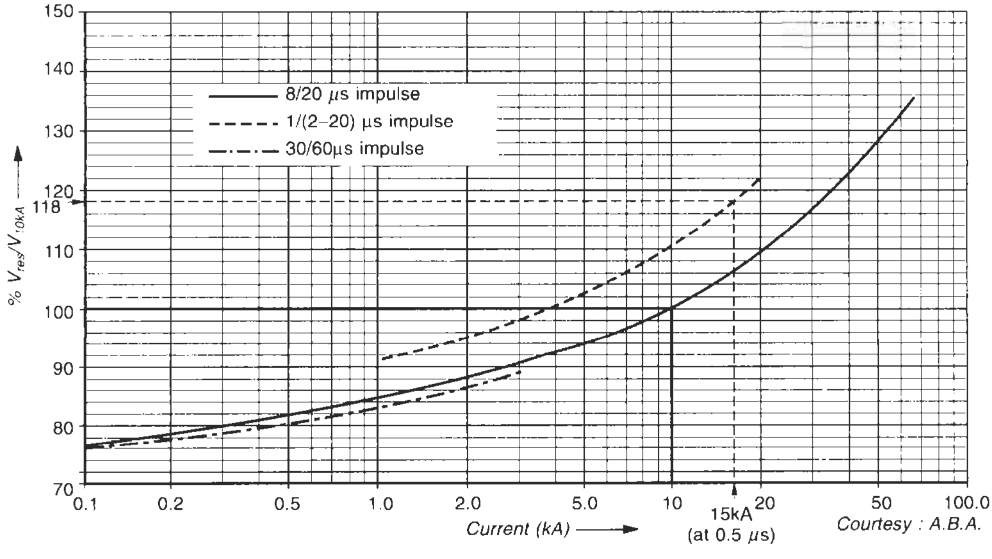

Courtesy : A.B.A.

Figure 18.7 Protective characteristics for arresters type EXLIM Q (maximum residual voltage in per cent of residual voltage at 10 kA, 8/20 μs)

18.5 Protective level of a surge arrester

This is the maximum voltage at an arrester's terminals that it can sustain while it discharges to the ground excess voltages in excess of it without damaging the terminal equipment or disrupting the continuity of the supply system. In other words, it is the breakdown (for gapped) or discharge value (for gapless) surge arresters at which they would initiate operation and is the basic parameter that forms the basis of selection for a particular installation.

The purpose of a surge arrester is to safeguard a system against probable transient conditions, particularly those that may exceed the safe impulse withstand level of the equipment. A brief criterion to determine the protective level of an arrester is given in Table 18.3. The spark-over voltage refers to conventional type gapped arresters, while the residual voltage refers to gapless type surge arresters. An arrester must protect the terminal equipment against each kind of transient condition separately. Its protective level must therefore be checked separately for all such transient conditions. While for a lightning and switching surge, it would be enough to define it by its amplitude, the FOW will be defined by its amplitude and the front time, t_1.

The severity of the transient conditions can be established on the basis of past experience or data collected from similar installations. However, for large and more critical installations, such as a generating station or a large switchyard, it is advisable to carry out transient network analysis (TNA) or electromagnetic transient programme analysis (EMTP) with the aid of computers. For more details refer Gibbs *et al.* (1989) in Chapter 17. Where this is not necessary, the system may be analysed as follows to arrive at a more appropriate choice of protection level.

1 **Level of exposure**
   - **When equipment is exposed to direct lightning strikes** Equipment connected directly to an overhead line, or even through a transformer, will fall into this category. Select the highest value of BIL and even then a surge protection will become necessary for critical installations.
   - **When equipment is shielded** This is when it is installed indoors, like a generator or motor. Now it may be subject to only attenuated surges. One may now select a lower value of BIL. In most cases surge protection may not be essential for direct lightning strikes.
   - **When equipment is exposed to severe internal disturbances** This is when equipment is exposed to switching surges, particularly when the surges are steep-fronted, as in switching of HT motors and all range-II equipment that are exposed to switching surges (Section 17.7). Now both a higher level of BIL and surge protection may be necessary.

2 **Influence of surge reflections**
3 **Influence of surge transferences**
4 **Effect of resonance**

These are only basic guidelines. It is difficult to define exposed or shielded equipment accurately. Equipment installed indoors may never be subject to lightning strikes or their transferences, but may be exposed to severe switching surges and require surge protection as for an exposed installation. There is no readymade formula by

Table 18.3 Establishing the protection level of a surge arrester

Transient condition as in Table 18.1	*Protection level of a gapped surge arrester*	*Protection level of a gapless surge arrester**
(1) Lightning surge for systems ≤ 245 kV	The highest lightning impulse spark-over or breakdown voltage of the arrester should be less than the lightning impulse withstand level of the equipment being protected less by the protection margin (Table 18.2)	The highest impulse residual or discharge voltage across the arrester at the nominal discharge current (item 10, Table 18.9) should be less than the lightning impulse withstand level of the equipment being protected less by the protective margin (Table 18.2)
(2) Switching surge for systems ≥ 300 kV	The highest switching impulse spark-over voltage of the arrester should be less than the switching surge impulse withstand level of the equipment being protected less by the protective margin (Table 18.2)	The highest switching impulse residual or discharge voltage across the arrester at a specified switching impulse current (item 11, Table 18.9) should be less than the switching impulse withstand level of the equipment being protected less by the protective margin (Table 18.2)
(3) Steep-fronted waves (FOWs) $t_1 \leq 1$ μs – originating from a premature interruption or multiple restrikes during a switching operation	The highest front of wave spark-over voltage of the arrester should be less than the FOW impulse withstand level of the equipment less by the protective margin (Table 18.2)	The highest FOW residual or discharge voltage across the arrester at a steep fronted impulse (1/20 μs) (item 12, Table 18.9) should be less than the FOW impulse withstand level of the equipment less by the protective margin (Table 18.2)

* Also refer to Example 18.5 and Table 18.11.

Notes

1 The protective levels of the surge arresters, at different system voltages are furnished by the manufacturers in their product catalogues. Tables 18.9 and 18.11 furnish typical data for a few established manufacturers.

2 In our subsequent text, we have limited our discussions only to the more prevalent gapless surge arresters.

which such levels can be quickly established, except experience. The project engineer is the best judge of the most appropriate level of BIL, depending upon the surge protection scheme. Below we briefly discuss the effect of surge reflections and transferences on the safety of equipment to arrive at the right choice of BIL and the surge protection criteria.

18.5.1 Reflection of the travelling waves

The behaviour of a transient wave at a junction of two conductors, such as at junction *J* in Figure 18.8, is similar to that of water, when it passes through one large-diameter pipe to another of a smaller diameter. Some of the water will flow ahead and the remainder will backflow at the junction. Similarly, a transient wave will also reflect in part or in full at a junction between two conductors of different surge impedances, depending upon the surge impedance of the circuit ahead of the junction. This would give rise to two types of waves, i.e.

- Refracted wave: a wave that is transmitted beyond the junction.
- Reflected wave: a wave that is repelled at the joint.

See Figure 18.9

To analyse this phenomenon refer to Figure 18.8,

If Z_{S1} = surge impedance of the incoming circuit
Z_{S2} = surge impedance of the outgoing circuit (Figure 18.8(a))
E = voltage of the incident wave (incoming wave)
E' = voltage of the reflected wave.
E'' = voltage of the refracted (transmitted) wave.

then the voltage of the reflected wave

$$E' = E \cdot \frac{Z_{S2} - Z_{S1}}{Z_{S2} + Z_{S1}} \tag{18.3}$$

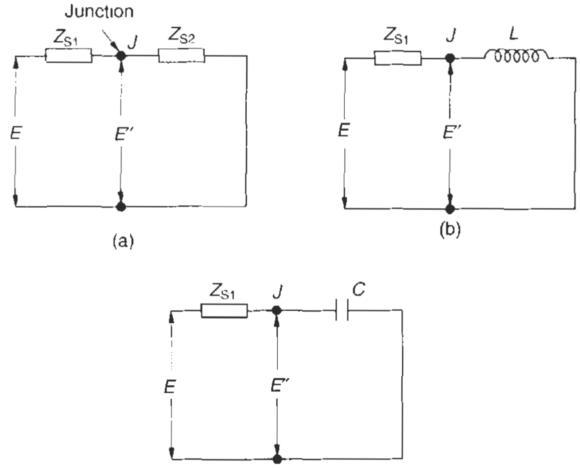

Figure 18.8 Different parameters of switching circuits

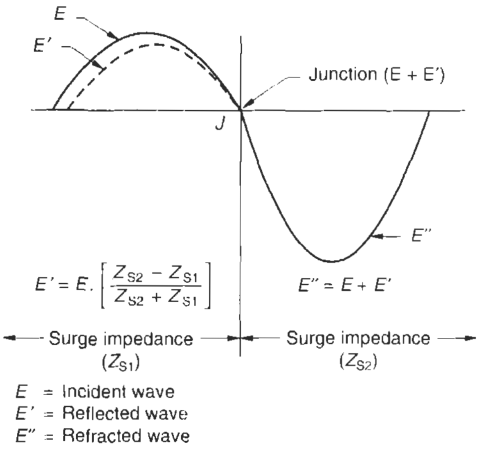

Figure 18.9 Illustration of the reflection of a TRV at a junction

and the voltage of the refracted wave

$$E'' = E + E'$$

$$= E + E \cdot \left(\frac{Z_{S2} - Z_{S1}}{Z_{S2} + Z_{S1}}\right)$$

$$= E \cdot \frac{2 Z_{S2}}{Z_{S2} + Z_{S1}} \tag{18.4}$$

If the outgoing circuit is inductive (Figure 18.8(b)) as in a motor, transformer or an inductor coil, with an inductance *L* then

$$E'' = 2E \cdot \left(e - \frac{Z_{S1} \cdot t}{L}\right) \tag{18.5}$$

and if it is capacitive (Figure 18.8(c)) with a capacitance *C* then

$$E'' = 2E \cdot \left(1 - e^{-\frac{t}{Z_{S1} \cdot C}}\right) \tag{18.6}$$

This can also be derived for a combined *R*, *L* and *C* circuit to obtain more accurate data. Generally, the figure obtained through equation (18.4) is simpler, quicker and provides almost correct information for the purpose of surge analysis, and is used more in practice. Where, however, more accurate data are necessary, such as for academic interest, then the more relevant formulae may be used.

Surge impedance thus plays a significant role in determining the magnitude of the reflected wave that matters so much in adding to the TRVs. (Also refer to graphs of Figure 17.7 corroborating this analysis.)

- When the circuit is open at the junction then

  $Z_{S2} = \infty$

  $E' = E$, i.e. the travelling wave will reflect in full. The voltage at the junction

  $= E + E'$

  $= 2\,E$

The incoming circuit is therefore subject to twice the system voltage and the voltage of the refracted wave

$$E'' = E + E'$$
$$= 2\,E$$

This means that the travelling wave will transmit in full, and the system will encounter a voltage of twice the system voltage. Refer to Figure 18.10(a).

- When the circuit is shorted at the junction then

  $$Z_{S2} = 0$$

  and $E' = -E$

  and voltage at the junction = 0.

  This means that the travelling wave will reflect in full but with negative polarity, thus nullifying the system voltage. The voltage of the refracted wave will also be zero, and obviously so, as there will be no refraction at the shorted end. Refer to Figure 18.10(b).
- When the travelling wave at the junction enters a circuit with equal surge impedance, such as in the cable before or after an interrupter, then $Z_{S2} = Z_{S1}$ and $E' = 0$. This means that there will be no reflection and the incidence wave will transmit in full, i.e. $E' = E$. (Refer to Figure 18.10(c).) Hence such a junction will cause no damage to the terminal equipment or the interconnecting cables. Thus, the voltage wave at a junction will transmit and/or reflect in part or in full, depending upon the surge impedances as encountered by the incident and the refracted voltage waves. Each junction exposed to a travelling wave may thus be subject to severe voltage surges up to twice the incidence voltage, depending upon the surge impedances of the circuits before and after the junction. When the circuit parameters cause such high voltages, care must be taken in selecting the equipment, particularly for their connecting leads and end turns as the subsequent turns will be less stressed due to an attenuated refracted wave.

Example 18.1

Consider a 33 kV overhead distribution network connected to a terminal equipment through a cable (Figure 18.11). If the surge impedance of the line is considered to be $Z_{S1} = 450\ \Omega$ and the surge is travelling into the terminal equipment through a cable having a surge impedance of $Z_{S2} = 60\ \Omega$ then,

- The voltage of the refracted wave, at junction 'a',

  $$E'' = 2E \cdot \frac{60}{450 + 60}$$
  $$= 0.235\ E$$

  which is much less than even the incidence wave and hence, safe to be transmitted.
- The voltage of the reflected wave

  $$E' = E \cdot \frac{60 - 450}{450 + 60}$$
  $$= -\frac{390}{510}\,E$$
  $$= -\,0.765\ E$$

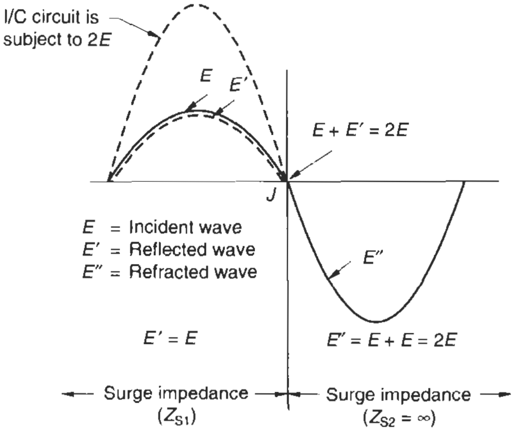

(a) Junction open circuited.

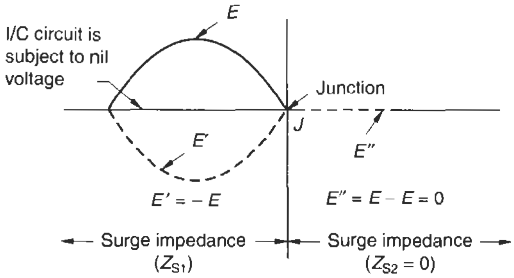

(b) Junction short circuited

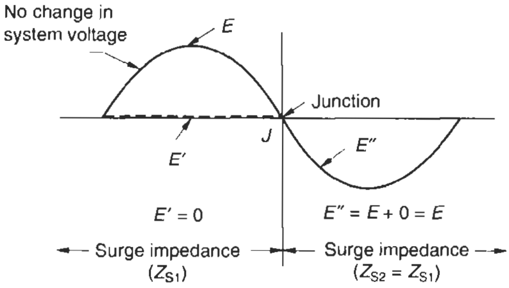

(c) When $Z_{S2} = Z_{S1}$

Figure 18.10 Magnitudes of refracted and reflected waves under different junction conditions.

Thus most of the incidence wave will reflect back with negative polarity and reduce the effect of the incidence wave. But the situation reverses as the surge travels ahead to a transformer through junction 'b', as illustrated, and encounters a higher surge impedance. The cable has a very low Z_s compared to a transformer. Now the refracted and reflected waves are both of high magnitude. The reflected wave also has a positive polarity and enlarges the incidence wave. The cable and the terminal equipment are now both subject to dangerous surges as illustrated below:

If the surge impedance of the transformer is considered as 4000 Ω, then the voltage of the refracted wave

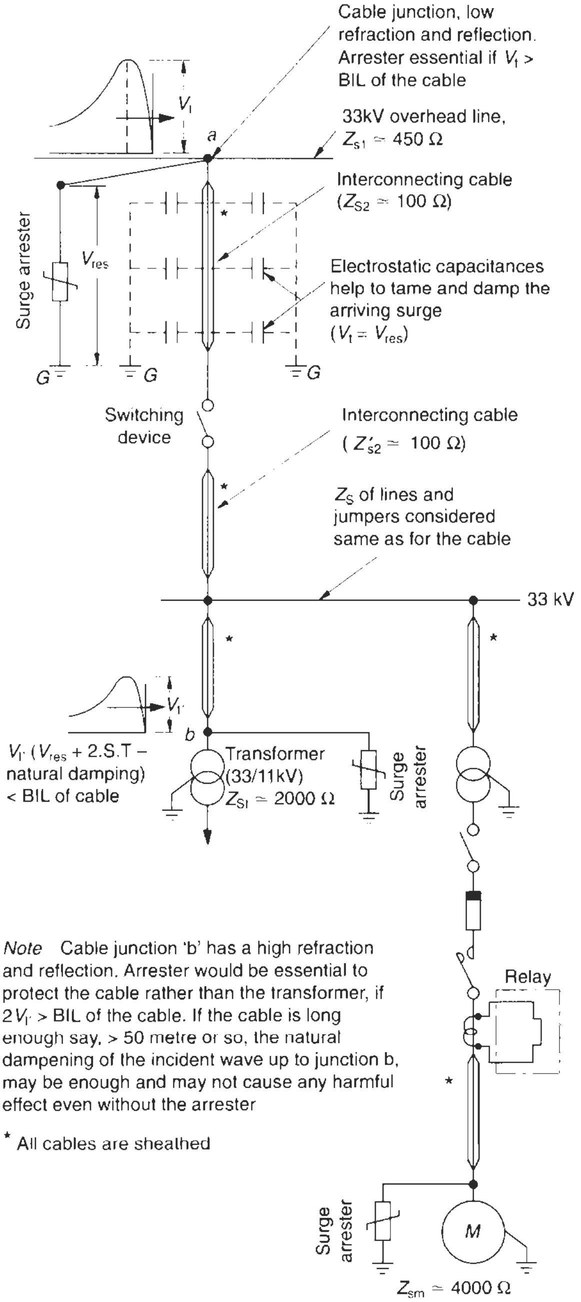

Note Cable junction 'b' has a high refraction and reflection. Arrester would be essential to protect the cable rather than the transformer, if $2V_{t'}$ > BIL of the cable. If the cable is long enough say, > 50 metre or so, the natural dampening of the incident wave up to junction b, may be enough and may not cause any harmful effect even without the arrester

* All cables are sheathed

Figure 18.11 Surge protection of cables, transformer and motor

$$E'' = 2E \cdot \frac{4000}{60 + 4000}$$

$$\simeq 2E$$

and of the reflected wave

$$E' = E \cdot \frac{4000 - 60}{60 + 4000}$$

$$\simeq E$$

which will also raise the incidence wave to roughly $2E$. Then, there will be multiple reflections between the junctions until the reflected surges will attenuate naturally. It is therefore essential to protect the cable against surges at both the ends as shown, particularly when the travelling wave is likely to be of a higher value than the BIL of the cable. It is, however, noticed that there is a natural dampening of the travelling waves as they travel ahead through the power system due to the system's lumped capacitances and inductances. Even the multiple reflections tend to achieve a peak of just twice the incidence surge. It is, however, advisable to take cognisance of all such reflections and refractions while carrying out the engineering for a surge protection scheme and deciding the location for the surge arresters.

Surges originating at some distance from the equipment are of less consequence, for they become dampened as they propagate due to circuit parameters L and C. For the purpose of surge protection, each segment must be considered separately as the surges may generate at any segment and hence separate protection is essential for each segment.

18.5.2 Surge transference through a transformer (from the higher voltage side to the lower voltage side)

This is another phenomenon which can be observed on a transformer's secondary circuit. Voltage surges occurring on the primary side of the transformer, during a switching operation or because of a lightning strike, have a part of them transferred to the secondary (lower voltage) side. This is termed 'surge transference'.

A transformer has both dielectric capacitances and electromagnetic inductances. Surge transference thus depends on the electrostatic and electromagnetic transient behaviour of these parameters as noted below.

Electrostatic transference

At power frequency, the effect of electrostatic capacitances is almost negligible as they offer a very high impedance ($X_c \propto 1/f$, f being too low) to the system voltage. The transformer windings behave like a simple inductive circuit, allowing a normal transformation of voltage to the secondary. A system disturbance, such as a ground fault, lightning strike or switching sequence, however, will generate surges at very high frequencies, f_s. When such high-frequency surges impinge the windings, the lumped (electrostatic) capacitances offer a near-short-circuit to them while the electromagnetic circuit offers a near-open circuit ($X_L \propto f_s$). The transformer now behaves like a capacitive voltage divider and causes voltage surges due to capacitive coupling, in the lower voltage windings, tertiary (if provided), cables and the terminal connected on the secondary side. The capacitive coupling may be considered as comprising the following.

- Capacitance between the turns of the windings
- Capacitance between higher and lower voltage main windings
- Capacitance between windings and core.

See Figure 18.12. The transformer as a voltage divider is illustrated in Figure 18.13, and transfers a substantial amount of the first peak of the incidence surge on the primary side to the secondary side. The surge voltage transfer can be expressed by

$$V_{\mathrm{tc}} = \frac{C_{\mathrm{p}}}{C_{\mathrm{p}} + C_{\mathrm{s}}} \cdot V_{\mathrm{t}} \cdot p \qquad (8.7\mathrm{a})$$

where

V_{tc} = voltage of surge transference

C_{p} = lumped capacitance between the primary and secondary windings

C_{s} = lumped capacitance of the lower voltage side. These values are provided by the transformer manufacturer.

V_{t} = Prospective voltage surge that may appear on the primary side. If an arrester is provided on the primary side, this voltage is limited to the residual voltage of the arrester (V_{res}). In both cases, consider the higher voltage such as during an FOW. In fact, the lumped capacitances will provide the arriving surge with a short-circuit path to the ground and help to dampen transference to the secondary to some extent. But these effects are not being considered to be more conservative.

p = a factor to account for the power frequency voltage already existing when the surge occurs. IEC 60071-2 has suggested a few typical figures as noted below:

(a) For a lightning surge and FOW :
For Y/Δ or Δ/Y transformers, $p \simeq 1.15$
For Y/Y or Δ/Δ transformers, $p \simeq 1.07$

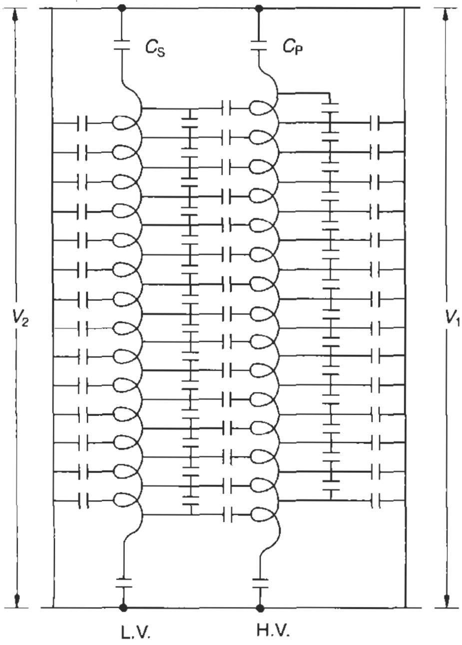

Figure 18.12 Distribution of winding inductances and leakage capacitances in a transformer shown for one winding

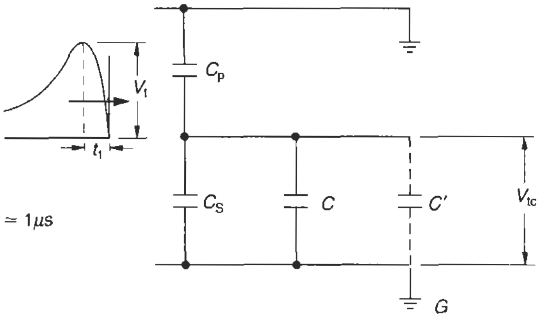

V_t – Surge on the primary side
V_{tc} – Surge transference on the secondary side
C_p – Lumped capacitance between the primary and the secondary windings
C_S – Lumped capacitance of the lower voltage side
C' – Protective capacitance
C – Capacitance of cable and equipment connected on the lower voltage side

Figure 18.13 A transformer as a capacitor voltage divider, drawn for one phase

(b) For a switching surge, $p \simeq 1.0$ in both the above cases.

A lightning surge and an FOW have more influence compared to a switching surge due to the former's higher surge frequencies, f_{s}.

Margins can be added to account for the severity of the surges, depending upon the type of installation and its criticality.

For high transformation ratios when V_1/V_2 is high, $C_{\mathrm{p}} >> C_{\mathrm{s}}$ and the incidence surges tend to transfer the whole of their severity to the secondary side. $C_{\mathrm{p}}/(C_{\mathrm{p}} + C_{\mathrm{s}})$ is the ratio of transference when the secondary is open circuited. Transference is highest when it is open circuited. This ratio will generally lie between 0 and 0.4 (IEC 60071-2), but the exact figure must be obtained from the manu-facturer, when designing the protection scheme. In service, there are a number of load points connected to it, influencing the electrostatic value in the denominator. If 'C' is the capacitance of the cables and the equipment connected on the lower voltage side of the transformer, the transferred surge will be reduced to

$$V_{\mathrm{tc}} = \frac{C_{\mathrm{p}}}{C_{\mathrm{p}} + C_{\mathrm{s}} + C} V_{\mathrm{t}} \cdot p \qquad (18.7\mathrm{b})$$

The front of the transferred surge will, however, be less steep and dampened than on the primary side due to capacitive dampening. But sometimes this may also exceed the BIL, particularly of the tertiary (if provided) and also the secondary windings of the transformer, as well as the cable and the terminal equipment connected on the lower voltage side. This is especially the case when the primary side voltage is very high compared to the secondary. Protection of the secondary windings, in all probability, will be sufficient for all the cables and terminal equipment connected on the secondary side.

Moreover, as the surge travels through the primary to the secondary of the transformer, a part will become dampened due to partial discharge of the surge to the ground through the capacitive coupling and also partly through the inductive coupling of the transformer. As the surge travels forward it will encounter the system's (interconnecting cables and the terminal equipment) capacitive and inductive couplings, and will continue to attenuate in steepness as a result of electrostatic discharges, and in amplitude due to inductance of the circuit. In fact, additional surge capacitors (C') can be provided across the secondary windings as illustrated in Figure 18.13, to further dampen the arriving transferred surges. In fact, this practice is sometimes adopted.

For adequate insulation coordination it is mandatory to first check such transferences with the BIL of the transformer's tertiary and secondary windings. The tertiary is a crucial winding and any damage to this will mean a major breakdown of the transformer. For the purpose of protection and to be more conservative, these calculations may be carried out with the LV side open-circuited. Similarly, on the primary side, the most severe surge such as an FOW may be considered. If the transferred surge exceeds the BIL of the tertiary and secondary windings, one or more of the following protective measures may be considered:

- When the primary is provided with an arrester, select one with a lower V_{res}, to shield the secondary side also.
- Consider tertiary and secondary windings with a higher BIL, if possible.
- But the tertiary must be specifically protected by the use of an additional surge arrester between each of its phases and the ground. It is possible that this arrester may discharge rather too quickly compared to the main arrester on the primary in view of larger transferences, compared to a very low voltage rating of the tertiary. If this occurs, the arrester at the tertiary may fail. The rating of the tertiary arrester, therefore, must be meticulously coordinated with the V_{res} of the primary arrester. The V_{res} of the tertiary arrester may have to be chosen high and so the tertiary must be designed for a higher BIL.
- Use surge capacitances across the secondary windings.
- Generally, an arrester on the primary should be adequate to protect the secondary windings. When it is not, a separate arrester may be provided between each phase and ground of the secondary windings.
- The terminal equipment connected on the secondary side of the transformer is thus automatically protected as it is subject to much less and attenuated severity of the transferred surges than the secondary windings of the transformer. Nevertheless, the BIL of the interconnec-ting cables and the terminal equipment must be properly coordinated with the BIL of the transformer secondary, particularly for larger installations, say, 50 MVA and above, to be absolutely safe. Example 18.2 will explain the procedure.

Electromagnetic transference

This is for systems having secondary voltages up to 245 kV and that are subject to the power frequency withstand test.

During a high-frequency (FOW) surge, the inductive impedance of the windings becomes very high and offers an open circuit to the arriving surge, and there is no inductive transference of voltage surges to the secondary. But at lower frequencies, such as during overvoltages, long-duration switching surges (250/2500 μs), and even during lightning surges, the windings acquire enough inductive continuity to transfer a part of these voltages to the secondary, depending upon the f_s of the arriving surge, in the ratio of their transformation (V_2/V_1). It is generally noticed that such transferences hardly exceed the power frequency withstand level of the windings and are thus less critical. Nevertheless they must be counter-checked while designing the surge protection scheme for the whole system. If it is higher, then

- The arrester on the primary side may be selected with a lower residual voltage (V_{res}), or
- The tertiary and secondary windings may be selected for a yet higher BIL if possible, or
- An additional arrester on the tertiary and secondary sides must be provided.

IEC 60071-2 suggests the following formula to determine such voltages:

$$V_{ti} = \text{p.q.r} \cdot \frac{V_t}{n} \tag{18.8}$$

where

p = factor for power frequency voltage already existing, when an overvoltage or a long-duration switching surge occur as noted above.

q = response factor of the lower voltage circuit to the arriving long-duration surges (for power frequency transferences $q = 1$ and for FOWs $q \simeq 0$).
  (i) For secondary open-circuited.
    lightning surges $q \leq 1.3$, and
    switching surges $q \leq 1.8$.
  (ii) For loaded secondary $q < 1.0$.

It is seen that normally it may not exceed 1.0 due to many factors, such as the secondary may not be open-circuited, and the circuit parameters, L and C, that the arriving surge may have to encounter with both having a dampening effect:

r = a factor that will depend upon the transformer connections, as indicated in Figure 18.14

V_t = a prospective long-duration switching surge voltage that may appear on the primary side. If an arrester is provided on the primary side, this may be substituted with the switching surge residual voltage of the arrester, V_{res}

n = transformation ratio of the transformer (V_1/V_2)

Example 18.2

Consider segment *X* of Figure 18.25 for the purpose of surge protection. The detailed working is provided in a tabular form, for more clarity, as under:

S. no.	Transformer connections			Surges on one phase only $V_r = 1$p.u, $V_y = V_b = 0$		Surges of opposite polarity on two phases $V_r = 1$ p.u, $V_y = -1$ p.u, $V_b = 0$	
	HV winding	LV winding	Tertiary winding	HV winding	Value of *r* for LV winding	HV winding	Value of *r* for LV winding
1	*Y*(*g*)	*y*(*g*)	(–, *y*)	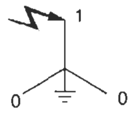	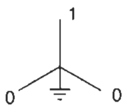	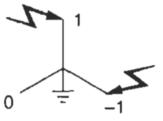	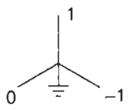
2	*Y*(*g*)	*y*(*i*)	(–, *y*)	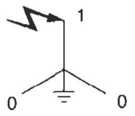	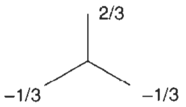	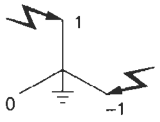	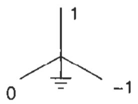
3	*Y*(*g*)	*Δ*	(–, *y*, *Δ*)	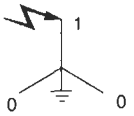	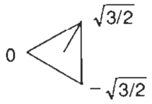	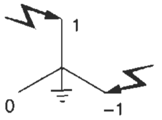	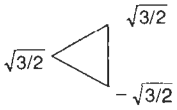
4	*Y*(*i*)	*y*(*g*, *i*)	(–, *y*, *Δ*)	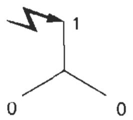	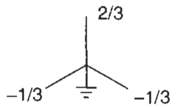	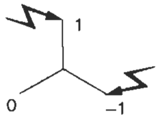	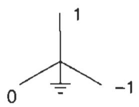
5	*Y*(*i*)	*Δ*	(–, *y*, *Δ*)	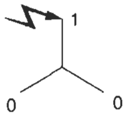	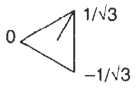	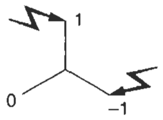	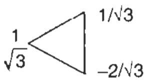
6	*Y*(*i*)	*z*(*g*, *i*)	(–, *y*, *Δ*)	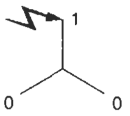	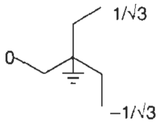	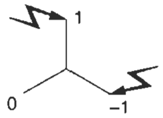	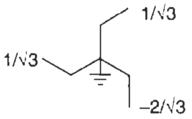
7	*Δ*	*y*(*g*, *i*)	(–, *y*, *Δ*)	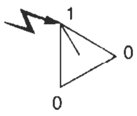	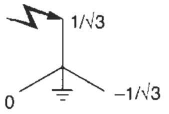	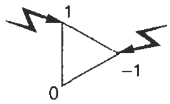	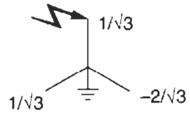
8	*Δ*	*Δ*	(–, *y*, *Δ*)	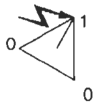	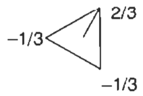	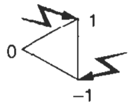	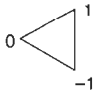

g – Grounded star
i – Isolated star

△ Delta connected windings

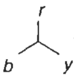

Star connected windings

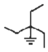
Zig–zag windings

Figure 18.14 Values of factor '*r*'

<table>
<tr><th></th><th>Considerations</th><th></th><th>Parameters</th></tr>
<tr><td>(A)</td><td>Transformer voltage ratio</td><td></td><td>132/11 kV</td></tr>
<tr><td></td><td>Connections</td><td></td><td>Y/▷</td></tr>
<tr><td></td><td>Rating</td><td></td><td>60 MVA</td></tr>
<tr><td></td><td>Approx. surge impedance from graphs of Figure 17.7(b) by extrapolation (obtain accurate value from the manufacturer)</td><td></td><td>50 Ω</td></tr>
<tr><td></td><td>Surge travels from higher voltage side of the transformer to the lower voltage side. Consider a surge protection on the primary, with details as follows:</td><td></td><td></td></tr>
<tr><td></td><td>BIL of transformer from Table 13.2.
(Choosing a higher level, as the system being exposed to the atmosphere).</td><td></td><td>
<table>
<tr><th></th><th>Power frequency withstand voltage</th><th>LIWL</th></tr>
<tr><td>HV side</td><td>275 $kV_{r.m.s}$</td><td>650 kV peak</td></tr>
<tr><td>LV side</td><td>28 $kV_{r.m.s.}$</td><td>75 kV peak</td></tr>
</table>
</td></tr>
<tr><td></td><td>Primary side</td><td>V_m</td><td>145 $kV_{r.m.s}$</td></tr>
<tr><td></td><td></td><td>1 p.u.</td><td>$145 \times \frac{\sqrt{2}}{\sqrt{3}} = 118$ kV</td></tr>
<tr><td></td><td>Secondary side</td><td>V_m</td><td>12 $kV_{r.m.s.}$</td></tr>
<tr><td></td><td></td><td>1 p.u.</td><td>$12 \times \frac{\sqrt{2}}{\sqrt{3}} = 9.8$ kV</td></tr>
<tr><td></td><td>Max. continuous operating voltage, MCOV ($V_m/\sqrt{3}$);</td><td></td><td></td></tr>
<tr><td></td><td>HV side</td><td></td><td>$\frac{145}{\sqrt{3}} = 83.7$ kV</td></tr>
<tr><td></td><td>LV side</td><td></td><td>$\frac{12}{\sqrt{3}} = 6.9$ kV</td></tr>
<tr><td>(B)</td><td>Characteristics of the arrester chosen from Table 18.9, class III; Standard rating, V_r
(for detailed working and exact design parameters for selecting the arrester, refer to Example 18.3)</td><td></td><td>120 kV</td></tr>
<tr><td></td><td>Max residual voltage (lightning) at 10 kA, V_{res} (8/20 μs)</td><td></td><td>355 kV peak</td></tr>
<tr><td></td><td>Max. residual voltage (switching) at 1 kA, V_{res} (30/60 μs)</td><td></td><td>294 kV peak</td></tr>
<tr><td></td><td>Max. residual voltage (FOW) at 10 kA, V_{res} (1/20 μs)</td><td></td><td>386 kV peak</td></tr>
<tr><td></td><td>TOV capability for 10 s</td><td></td><td>203 kV peak (140% of V_m which is OK)</td></tr>
<tr><td>(C)</td><td>Reflection of surges:</td><td></td><td></td></tr>
<tr><td></td><td>Z_s of jumpers through which will travel the surge to the transformer</td><td></td><td>200 Ω</td></tr>
<tr><td></td><td>As the transformer HV side is already protected by an arrester, it is not necessary to consider the influence of refraction of surges at point A, which is quite meagre in this case,</td><td></td><td>$2 \times V_t \times \frac{50}{50 + 200}$
$= 0.4\ V_t$</td></tr>
<tr><td></td><td>The reflected wave will dampen the incidence surge by</td><td></td><td>$V_t \cdot \frac{50 - 200}{50 + 200} = -0.6\ V_t$</td></tr>
<tr><td>(D)</td><td>Surge transferences through the HV side of the transformer</td><td></td><td></td></tr>
<tr><td></td><td>(i) Capacitive transference (initial voltage spike)
Assuming $\frac{C_p}{C_p + C_s} = 0.4$
$V_t = 2.5$ p.u.
Since an arrester is provided at location A, it is appropriate to substitute V_t by V_{res} (FOW) = 386 kV peak</td><td></td><td>$V_{tc} = \frac{C_p}{C_p + C_s} \cdot V_t \cdot p$</td></tr>
</table>

Considerations	*Parameters*
$p = 1.15$ for a lightning surge in a Y/Δ transformer,	$\therefore V_{tc} = 0.4 \times 386 \times 1.15$ $= 177.6$ kV peak
which is too high compared to LV side LIWL of the transformer of 75 kV_{peak} (protective level not to be more than $75/1.2 = 62.5$ $kV_{peak,}$ Table 18.2), and calls for either an arrester on the LV side too or provision of a few surge capacitors across the secondary windings such that,	$\dfrac{C_p}{C_p + C_s + C'} < \dfrac{62.5}{177.6}$
The value of C′ can be calculated if values of C_p and C_s are known, which can be obtained from the transformer manufacturer.	
Note Even then a surge protection is essential for the tertiary if the tertiary is provided.	
(ii) Inductive transference	$V_{ti} = p.q.r. \dfrac{V_t}{n}$
Assuming, $p = 1$ for a switching surge (in inductive transference we have to consider long-duration surges only) $q = 1.8$ for a switching surge $r = \dfrac{\sqrt{3}}{\sqrt{2}}$ from Figure 18.14 for a Y/Δ transformer with surges of opposite polarity appearing on two phases.	
$n = 145/12 = 12.1$ $V_t = V_{res}$ (switching) $= 294$ kV peak	$\therefore V_{ti} = 1 \times 1.8 \times \dfrac{\sqrt{3}}{2} \times \dfrac{294}{12.1}$ $= 37.9$ kV_{peak}
and the power frequency withstand capacity of the LV windings	$= 28$ $kV_{r.m.s.}$ or $28\sqrt{2}$ kV_{peak}
∴ Protective margin	$= \dfrac{28\sqrt{2}}{37.9} = 1.04$
which is too low. It is, however, possible to make it up by selecting the arrester on the primary side with a lower switching V_{res}. Consult the arrester manufacturer for it or provide an arrester on the secondary side also. Moreover, the response factor, q is considered very high, which may not be true in actual service and an arrester at the secondary may not be necessary in all probability.	
The BIL of the interconnecting cables and the terminal equipment on the secondary must be at least equal to the capacitive and inductive transferences of the primary surges as determined above. If it is not so, the V_{res} of the primary arrester must be re-chosen or an arrester also provided on the secondary side.	

18.5.3 Effect of resonance

This applies to systems up to 245 kV, where inductive impedance is significant.

It is possible that at certain frequencies the capacitive and inductive couplings of the transformer may resonate ($X_C = X_L$) (Section 24.4.1 and 2) during the course of a long-duration surge and give rise to yet higher voltage transferences. For critical installations it is advisable to identify (e.g. by TNA) the likely surges and their frequencies that may cause such a phenomenon to help to take corrective steps or modify the parameters C and L of the transformer at the design stage.

An arrester basically is for equipment protection and must be installed at all main equipment heads that are exposed to internal or external surges and whenever the amplitude of such surges, V_t, is expected to exceed the BIL of the equipment.

Figure 18.15 shows a power network with generation, transmission and distribution of power, illustrating the influences of the different kinds of surges that may appear in the system and which must be taken into account, while engineering a surge protection scheme for such a system or a part of it.

18.6 Selection of a gapless surge arrester

To provide the required level of surge protection for equipment or a power system against possible transient frequency voltage surges, ZnO gapless surge arresters are the latest in the field of insulation coordination. We provide below a procedure to select the most appropriate type and size of a ZnO surge arrester for the required insulation coordination. Based on the discussions above, the following will form the basic parameters to arrive at the most appropriate choice:

1 Service conditions: As for other equipment (e.g. motors, transformers or switchgears) a surge arrester is influenced too by unfavourable operating conditions such as noted in Table 18.4.

Unfavourable operating conditions will require a derating in the rating of a surge arrester or special surface treatment and better clearances. Refer to the manufacturer for the required measures and/or deratings.

2 Mechanical soundness: Such as strength to carry the weight of conductor and the stresses so caused, pressure of wind and, in extremely cold climates, the weight of ice.

3 Maximum continuous operating voltage (MCOV) V_c: This voltage is selected so that the highest system voltage, V_m, as in column 2, Tables 13.2 or 13.3, when applied to the arrester is less than or equal to the arrester MCOV, that is, $V_c \geq V_m / \sqrt{3}$.

4 The BIL of the equipment being protected (Section 18.3).

5 The arrester's nominal discharge current (I_n): This classifies an arrester and is the peak value of a lightning current impulse wave (8/20 μs) that may pass through the arrester for which it is designed. It may be one of the following:

1.5, 2.5, 5, 10 and 20 kA

Table 18.4 Standard operating conditions

Parameters	*Standard conditions*
1 Ambient temperature	−40°C to + 40°C
2 System frequency	48–62 Hz
3 Altitude	1000 m
4 Seismic conditions	Locations prone to experience an earthquake of magnitude $M = 5$ or a ground acceleration of 0.1 g and more (Section 14.6)
5 Pollution/contamination	Due to excessive rain humidity, smoke, dirt and corrosive surroundings etc., which may influence the arrester's porcelain housing outer surface, hence the insulating properties of the arrester.

18.6.1 TOV capability and selection of rated voltage, V_r

TOV is considered only to select the MCOV and the rated voltage, V_r, of the surge arrester. This is a reference parameter to define the operating characteristics of an arrester. It plays no part in deciding the protective level of the arrester, which is solely dependent on the transient conditions of the system, as discussed later. V_r is used to make the right choice of an arrester and its energy absorption capability to ensure that it does not fail under the system's prospective transient conditions.

To determine the level of TOVs and their duration, it is essential to analyse all the possible TOVs the system may generate during actual operation, and then decide on the most crucial of them, as shown in Table 18.5. Surge arrester manufacturers provide their TOV capability curves in the shape of TOV strength versus duration of the TOV. A few typical TOV capability curves are shown in Figure 18.16(a) for distribution class and Figure 18.16(b) for station class surge arresters. They indicate the ratio between V_c and V_r which may vary from manufacturer to manufacturer and is termed the TOV strength factor K. For curve 18.16(b) it is typically

$$V_c = 0.8\ V_r$$

Generalizing this for different conditions of TOV and make of surge arrester,

$$V_c = K \cdot V_r$$

For each kind of TOV and its duration, a corresponding factor (K) is obtained and with this is determined the required rating, V_r of the arrester. The most crucial TOV may be selected as the rating of the arrester. If it is not a standard rating as in the manufacturer's catalogue as shown in Tables 18.9 and 18.11, one may select the next higher rating available. A simple procedure is outlined in Table 18.5 for a quick reference.

To determine TOV

The main causes of TOV, as discussed above, may be one or more of the following:

- Load rejection (Section 24.6.2).
- Resonance and ferro-resonance effects (Sections 24.4.1 and 2 and 20.2.1(2)).
- Ground fault: Section 20.1. It is essential to know the grounding conditions to determine the OV factor as below:
- Amplitude: As discussed in Section 20.1, grounding conditions, besides influencing the ground fault current, also raise the system voltage in the healthy phases. It is established that for an isolated or resonant grounded system this can rise to 1.73 times and for a solidly grounded system up to 1.4 times the rated voltage. When system parameters such as R_0, X_0 and X_1 are known a more accurate assessment of this factor can be made by using OV curves as shown in Figure 20.16.

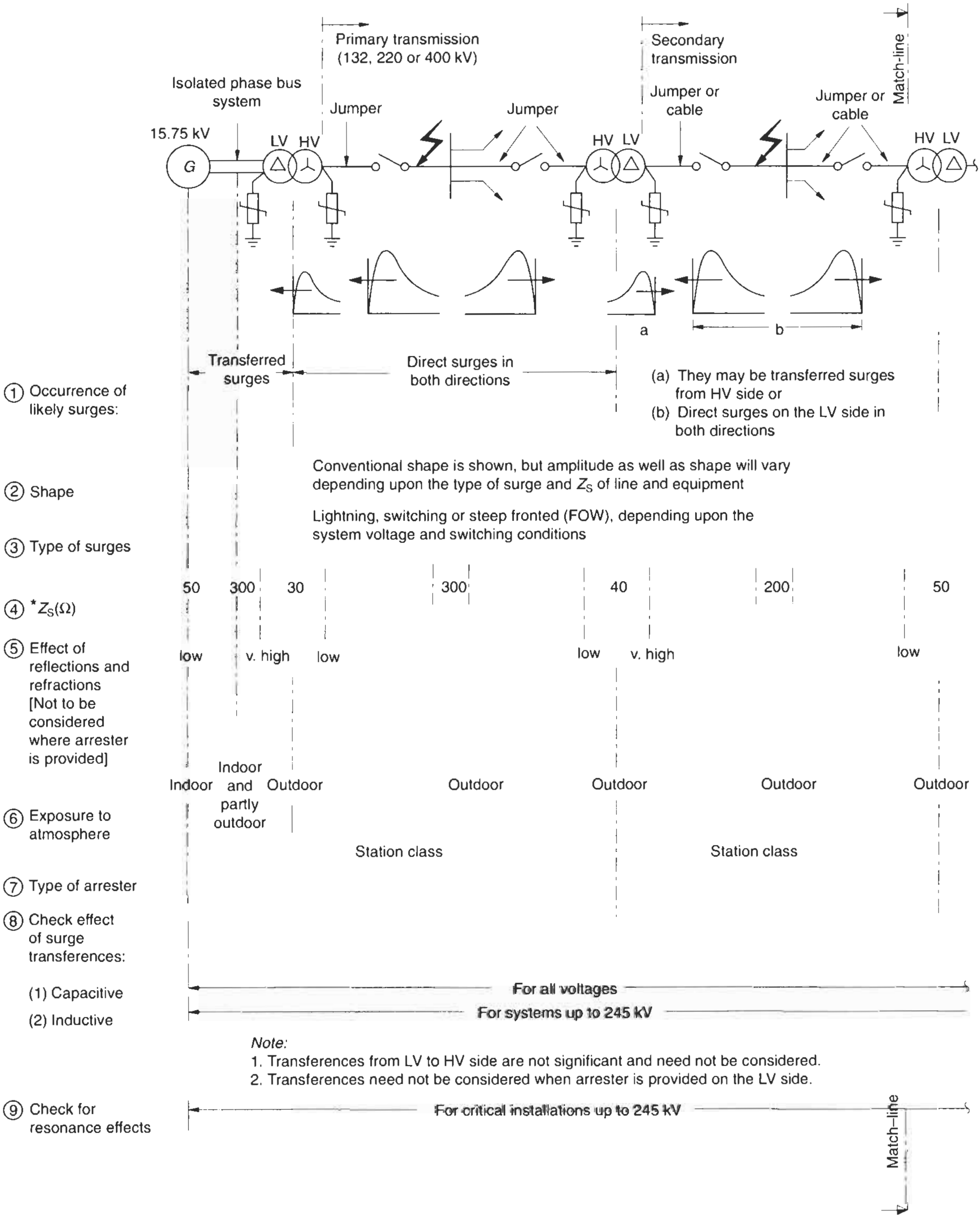

Note:
1. Transferences from LV to HV side are not significant and need not be considered.
2. Transferences need not be considered when arrester is provided on the LV side.

* Values are only indicative to assess the likely reflections at different junctions. Obtain accurate values from the equipment manufacturers.

Figure 18.15 (*contd.*)

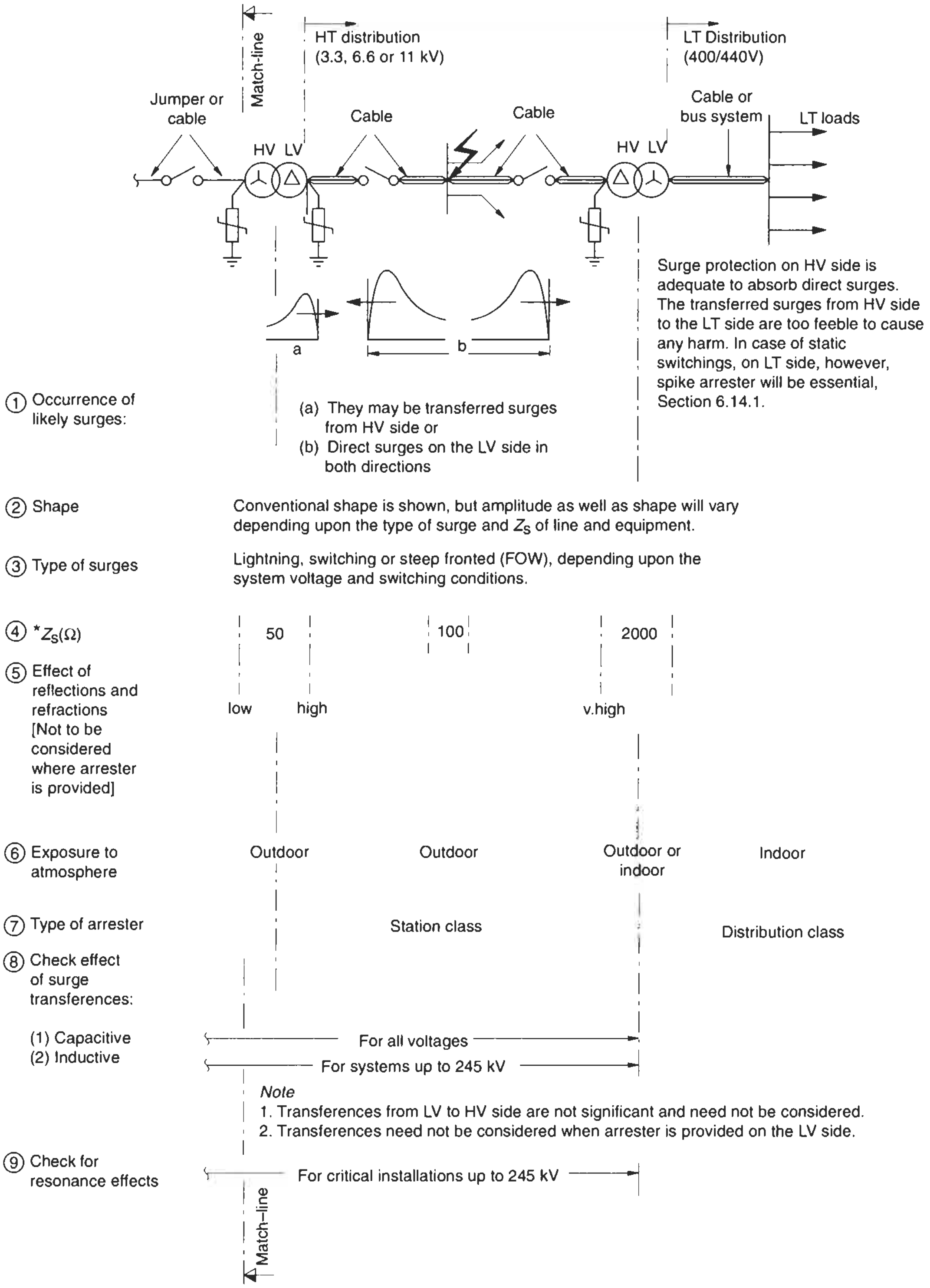

Surge protection on HV side is adequate to absorb direct surges. The transferred surges from HV side to the LT side are too feeble to cause any harm. In case of static switchings, on LT side, however, spike arrester will be essential, Section 6.14.1.

(a) They may be transferred surges from HV side or
(b) Direct surges on the LV side in both directions

Conventional shape is shown, but amplitude as well as shape will vary depending upon the type of surge and Z_S of line and equipment.

Lightning, switching or steep fronted (FOW), depending upon the system voltage and switching conditions.

Note
1. Transferences from LV to HV side are not significant and need not be considered.
2. Transferences need not be considered when arrester is provided on the LV side.

* Values are only indicative to assess the likely reflections at different junctions. Obtain accurate values from the equipment manufacturers.

Figure 18.15 A power generation, transmission and distribution network and strategic locations for the surge arresters

Table 18.5 Determining TOV

TOVs	*Cause of TOV*	*OV factor*	*Tripping time*	*TOV factor K from Figure 18.16(b) for a particular brand of surge arrester*
TOV_1[a]	Ground fault			
	(i) for a solidly grounded system	≤ 1.4	1 or 3 seconds	1.16 – for 1 second 1.13 – for 3 seconds
	(ii) For an isolated neutral system	1.73	10 seconds to a few hours and more	1.1 – for 10 seconds 0.93 – for 2 hours
TOV_2	Load rejection	1.1	1 second	1.16
TOV_3[a]	Phase-to-phase fault	[b]	1 or 3 seconds	1.16 – for 1 second 1.13 – for 3 seconds

[a] Consider only one eventuality to occur at a time.

[b] A phase-to-phase fault is a transient condition and may give rise to TRVs in the healthy phase. Such a situation may exist for one to three seconds, depending upon the protection scheme adopted. It is a long-duration condition for a surge arrester. Such an occurrence may be rare and need not be considered if the GF condition is already taken into account. However, for the sake of accountability, the voltage rise in the healthy phase under such a fault condition may be considered similar to the first pole-clearing condition of a circuit breaker. Although it may not be appropriate to equate the two conditions, the magnitude of overvoltage may fall in a similar range. IEC 60056 has suggested the following TRVs across the first pole during a breaker-opening sequence, while the other two poles are still in a closed condition:

up to 72.5 kV 1.3 V_r

100–170 kV 1.3–1.5 V_r

245 kV and above 1.3 V_r

(V_r being the rated voltage of the system)
The overvoltage factor, due to a phase fault, may thus not exceed a ground fault (GF) condition. It would, therefore, be appropriate to consider the GF condition instead of a phase fault and, in all probability, it will be adequate to account for this contingency.

- Duration: This will depend upon the ground fault protection scheme adopted and may be considered as follows:
  (a) For a solidly grounded system: 1–3 seconds (normally, generation and transmission systems are provided with a longer tripping time of up to 3 seconds, and a distribution system still longer, say, up to 10 seconds).
  (b) For an isolated, impedance or resonant grounded system: from a few minutes to several hours (when it is 2 hours or more, it may be considered continuous for the purpose of selection of an arrester).
- Short-circuit condition (Section 13.4.1(6)).

Based on these discussions and experience from different installations, the likely power frequency overvoltage (TOV) over a long period of operation for different voltage systems can be determined. For a more accurate value at a particular installation, it is advisable to carry out a system study. Generally, not more than one contingency may occur at a time. However, depending upon the type of system, which may be critical and more sensitive to load variations, a fault condition or frequent switchings, more than one contingency may also be considered.

Example 18.3
For a 400 kV system

V_m = 420 kV and

$$V_c = \frac{420}{\sqrt{3}} = 243 \text{ kV}$$

and minimum rated voltage V_0 = 243/0.8 = 304 kV, when the system is not subject to any TOV. Consider a solidly grounded system, with a protective scheme of 3 seconds and the eventuality of load rejection, which may occur simultaneously:

∴ Total TOV = 1.4 × 1.1 = 1.54

From Figure 18.16(b), the TOV factor, K = 1.13 for 3-second tripping.

$$\therefore \text{ Required } V_r = \frac{1.54 \times 243}{1.13}$$

$$= 331 \text{ kV (which is higher than 304 kV)}$$

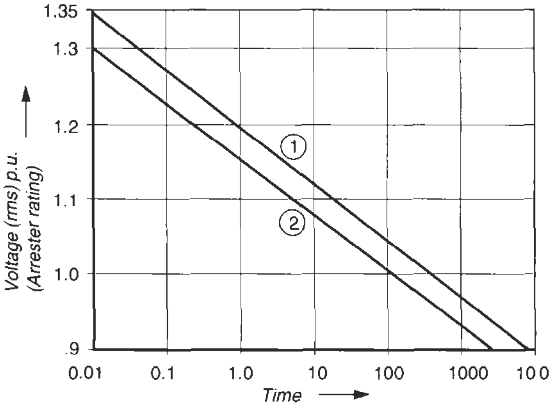

Curve – 1, No prior energy.
Curve – 2, With prior energy.

Figure 18.16(a) TOV capability of a distribution class arrester

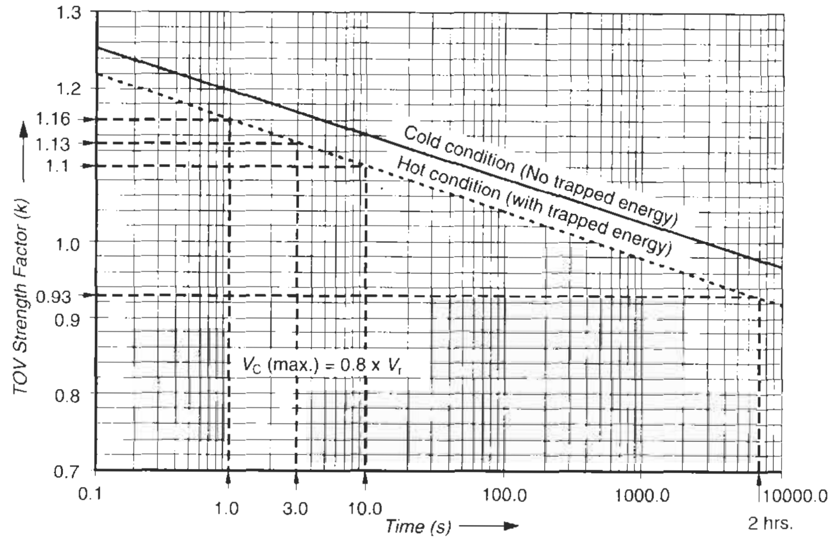

Figure 18.16(b) Typical TOV capability of a station class arrester

From the reproduced protective characteristics of this arrester, as in Table 18.11, the nearest next higher rating available is 336 kV for a 420 kV system voltage. This is the basic rating of the arrester which must be further checked for

- Whether its protective level can protect the BIL of the system and/or the equipment it is protecting, and
- its energy capability to clear safely the long-duration prospective voltage surges.

Note
Increasing the TOV level, i.e. choosing a higher protective level (V_{res}) of the arrester, may increase the life of the arrester but will reduce the margin of protection for the protected equipment. Selection therefore should be done judiciously bearing all these aspects in mind.

18.6.2 Selecting the protective level of the arrester

For prospective voltage surges, as described in Table 18.1, which may arise in the system during normal operation the protective characteristics of the surge arrester a must be well below the BIL of the equipment at all points. For a minimum protective margin refer to Table 18.2. It is the basic parameter of a surge arrester that defines its protective level. This is the voltage that will appear across the arrester terminals and thus also across the equipment being protected during a current discharge on the occurrence of a voltage surge. It should be well below the BIL of the equipment under protection. Refer to the load diagram shown in Figure 18.17, for more clarity.

To determine this, consider the simple power circuit diagram of Figure 18.18(a), where

Z_1 = surge impedance of the line on which is connected the equipment to be protected from the source of supply up to the arrester
Z_2 = surge impedance of the equipment to be protected
Z_t = surge impedance of the arrester at V_t

Then applying Thevenin's* theorem, the equivalent circuit can be represented as shown in Figure 18.18(b). On application of a voltage surge, the arrester will start

---

*Thevenin's theorem: This is one of the many theorems deduced mathematically to solve intricate circuits. This theorem has established that it is possible to replace any network with linear parameters and constant phasor voltage sources, as viewed from terminals, *a* and *b*, Figure 18.19(a), by a single phasor voltage source *E* with a single series impedance *Z*, Figure 18.19(b). The voltage *E* is the same that would appear across the terminals *a* and *b* of the original network when these terminals are open circuited, and the impedance *Z* is that viewed from the same terminals when all voltage sources within the network are short-circuited. This can be illustrated by the following example.

Consider the simple switching circuit of Figure 18.19(c). If we wish to find the current through the impedance Z_3, on the closure of the switch, *S*, then;

$$I = \frac{\text{Voltage across this circuit } (Z_3) \text{ before closing the switch. } E}{\text{Equivalent impedance, } Z\text{, of the remaining circuit as seen from this switch (Figure 18.19d)}}$$

$$= \frac{E}{Z_3 + \dfrac{1}{\left(\dfrac{1}{Z_1} + \dfrac{1}{Z_2}\right)}}$$

$$= \frac{E}{Z_3 + \dfrac{Z_1 \cdot Z_2}{Z_1 + Z_2}}$$

and the voltage across this circuit

$$E_1 = \frac{E \cdot Z_3}{Z_3 + \dfrac{Z_1 \cdot Z_2}{Z_1 + Z_2}} \quad \text{etc.}$$

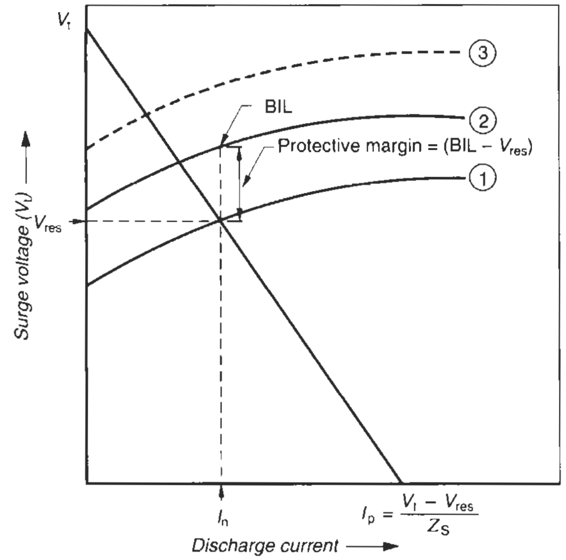

1. Surge arrester protective characteristics.
2. BIL of the equipment.
3. Actual voltage surge.

Figure 18.17 Load diagram

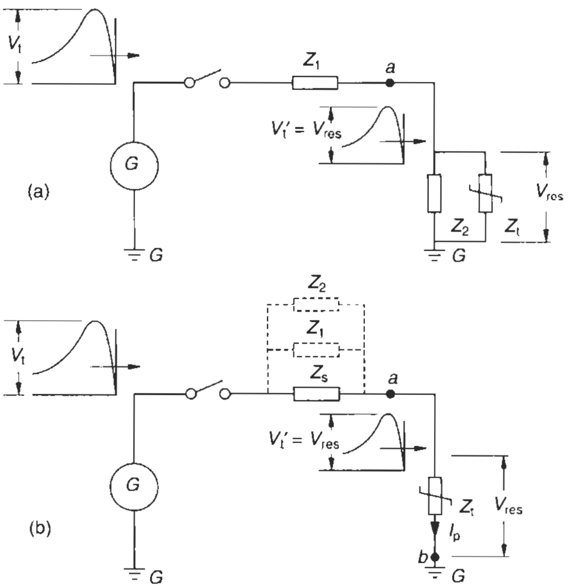

Z_1 = Source impedance
Z_2 = Impedance of equipment being protected
Z_t = Impedance of surge arrester. At V_t, it is negligible

Figure 18.18 Equivalent circuit applying Thevenin's theorem

conducting at a certain voltage and carry a certain discharge current. The voltage at which the conduction will start is the impulse protective level of the arrester and is termed the residual voltage (V_{res}) of the arrester. By a manufacturer it is determined for each particular arrester to establish its protective level. It is established by drawing its elements' $I \propto V^{\alpha}$ characteristics as shown in Figure 18.17 and drawing a load line on it to represent the characteristic of the prospective surge. It is drawn with V_t as the ordinate and the current through the equipment I_s (had there been no arrester) as the abscissa:

$$\text{Then } I_s = \frac{V_t}{Z_s}$$

and the protective current through the arrester on a discharge

$$I_p = \frac{\text{Voltage absorbed or the voltage that is discharged to ground}}{\text{Impedance of the line and the equipment}}$$

$$= \frac{V_t - V_{res}}{Z_s}$$

where

V_t = prospective surge voltage
V_{res} = residual surge voltage across the surge arrester (the impulse protective level of the arrester) which must be below the equipment BIL, with a sufficient protective margin,
and Z_s = equivalent impedance of Z_1 and Z_2. (the impedance of arrester, being too small, is ignored)

The criteria to determine the safe protective level of an arrester are the BIL of the equipment, as shown in Table 11.6 for motors, Tables 13.2 or 14.1 for switchgears, Table 32.1(A) for bus systems, and Tables 13.2 and 13.3 for all other systems. Motors have a comparatively lower BIL, but they are not connected directly on an outdoor

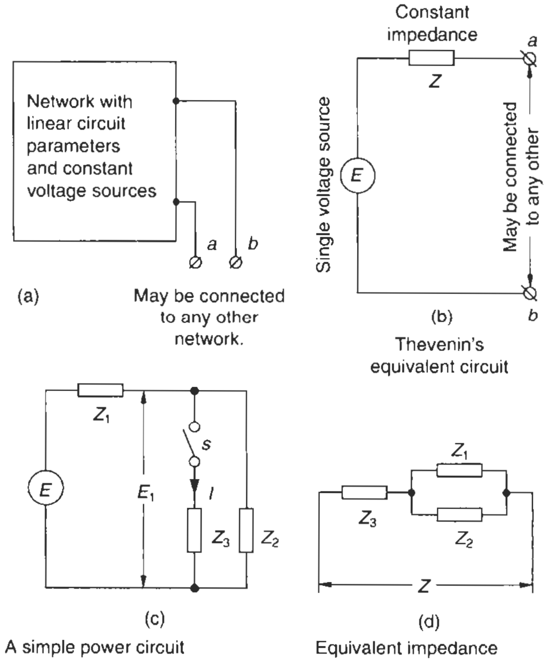

(a) May be connected to any other network.

(b) Thevenin's equivalent circuit

(c) A simple power circuit

(d) Equivalent impedance

Figure 18.19 Thevenin's theorem

overhead line, and are also reasonably shielded by the line transformer, switchgear and cables. Switchgear and the bus systems, which may or may not be as shielded as the motors, have comparatively a higher BIL than a motor. Their prescribed impulse withstand level for more exposed installations is given in Table13.2, list II or III, while for shielded installations, it is lower and given in list I. One may notice that list I is still higher than a motor. On this BIL is considered a suitable protective margin to provide sufficient safety to the protected equipment as in Table 18.2.

Protective characteristics of an arrester

The protective characteristic of a surge arrester is defined by its V_{res}, as a function of its nominal current (I_n) and the time of rise, t_1, in the impulse region as noted above. It is seen that the characteristic of an arrester varies with the front time of the arriving surge. Steeper (faster rising) waves raise the protective level (V_{res}) of an arrester, as illustrated in Figure 18.20, and reduce the protective margin for the equipment it is protecting. Refer to Figure 18.17 for more clarity. Figure 18.20 gives typical characteristic curves of a leading arrester manufacturer, drawn for different magnitudes of current waves (3–40 kA), V_{res} versus t_1. From these curves can be determined the revised V_{res} during very fast-rising surges to ensure that the arrester selected is suitable for providing adequate an protective margin during a fast-rising surge.

Protective distance

The protective level as determined above is true only when the surge arrester is mounted directly on the protected equipment (Figure 18.21). But this is seldom possible, as there is usually a gap between the surge arrester and the equipment, due to arrester height, connecting leads and the working gap required between the mounting of the arrester and the protected equipment. On the occurrence of a voltage surge, while the arrester will conduct and absorb the part of surge voltage that is in excess of its protective level (V_{res}), the residual voltage, V_{res}, will travel ahead with the same steepness (r.r.r.v.) until it reaches the equipment under protection. It may regain a sufficient surge voltage to endanger the BIL of the equipment. Since the voltage will continue to rise as it travels ahead, as illustrated in Figure 18.22, the equipment will be subject to higher stresses than the protective level considered for the surge arrester. The distance between arrester and the equipment and the r.r.r.v. will determine the excess stress to which the equipment will be subject. This can be determined by

$$V_s = V_{res} + S.2.T \qquad (18.9)$$

(See ABB 1991) where

V_s = actual surge voltage at the equipment
S = r.r.r.v. of the incoming wave in kV/μs

The factor 2 is considered to account for the reflection of the incident surge at the equipment (equation (18.3)):

T = travelling time of the surge to reach the equipment from the arrester terminals.
If l is the distance in metres from the arrester terminals to the equipment, then

$$T = \frac{l \times 10^{-3}}{0.3}\ \mu s$$

(considering the propagation of surge in the overhead lines at 0.3 km/μs, Section 17.6.6).

The longer the distance, l, the greater will be the severity of the oncoming wave which would reduce the protective margin of the arrester dangerously. Safe protective distances are normally worked out by the arrester manu-

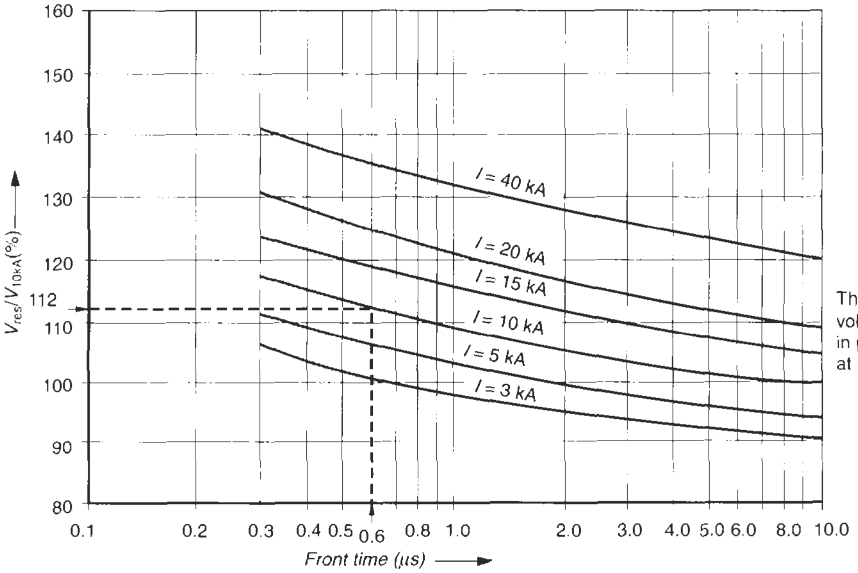

The curves provide residual voltages at different front times in per cent of residual voltage at 10 kA 8/20 μs

Figure 18.20 Variation in protective level of an arrester with front time

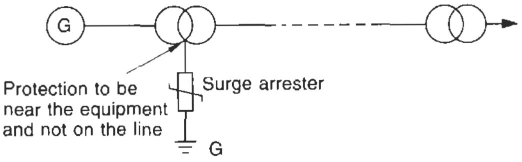

Figure 18.21 Ideal location of a surge arrester

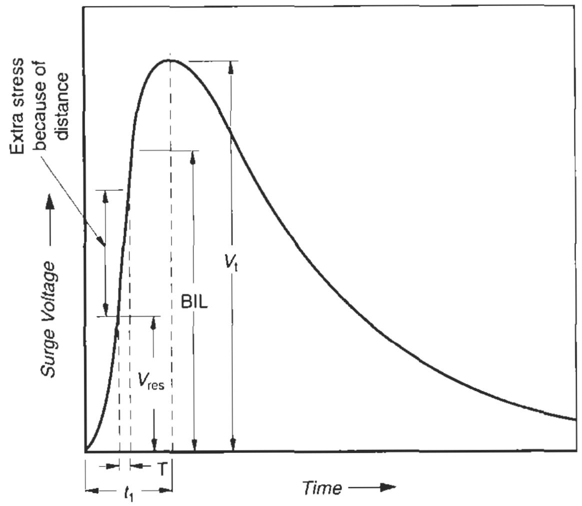

Figure 18.22 Effect of distance on the protective level

facturers and may be obtained from them for more accurate selection of an arrester.

Example 18.4
For the arrester of the previous example,

V_m = 420 kV,
V_r = 336 kV
V_{res} = 844 kV for a lightning surge protective margin at 20 kA discharge current, from the manufacturer (Table 18.11)

It we consider the lightning surge with a steepness of 2000 kV/μs, then for a total distance of, say, 8 m from the arrester to the equipment

$$V_s = 844 + \frac{2000 \times 2 \times 8 \times 10^{-3}}{0.3}$$
$$= 844 + 107$$
$$= 951 \text{ kV}$$

If we maintain a protective margin of 15% (to be more safe), then the minimum BIL that the equipment under protection must have

$$= 1.15 \times 951$$

$$= 1094 \text{ kV}$$

which is well below the BIL of the equipment (1175 kV) as in Table 13.3, list I. One can therefore safely select the arrester with the next higher rated voltage, V_r, at 360 kV and a V_{res} at 904 kV.

Note
A lightning surge protective level is found to be more stringent than the switching surge or FOW protective levels. Hence, it is sufficient to check the protective distance requirement for the lightning surge alone.

In such cases, care must be taken to reduce the protective distance, *l*, if possible, otherwise equipment with a higher BIL may have to be selected or an arrester with a lower V_{res}, considered. Alternatively one may have to provide two arresters in parallel, which is also an acceptable practice.

18.6.3 Required energy capability in kJ/kV$_r$

This is the energy the arrester has to absorb while clearing a switching surge. It also depends upon the distance of the arrester from the equipment it is protecting, as discussed above. The basic parameters that will determine the required energy capability (I^2Rt), are current amplitude, steepness, duration and number of likely consecutive discharges. The energy capability of an arrester depends upon the size of the ZnO blocks. By resizing these blocks, an arrester of a higher energy capability can be designed. Hence, an arrester with a higher kJ/kV$_r$ capacity will be larger than one with a lower KJ/kV$_r$. ZnO blocks can generally absorb much higher energies at low currents with long durations (i.e. power frequency stresses under normal operation) than higher currents for short durations (i.e. surge voltage capacitive discharges). To select the right type of arrester the energy capability of the arrester in kJ, therefore, must be determined by what it has to absorb on every discharge. System studies on and past experience of similar other installations can be a good guide for the likely number of consecutive discharges an arrester may have to perform at a time. Generally, two consecutive discharges are considered to be adequate. Like other equipment, a surge arrester becomes too heated too during normal service, even when it is not conducting, due to its continuous charging current, I_{ZnO} (Figure 18.4) however small the loss content. When the arrester is conducting, the level of discharge current ($I = kV^{\propto}$) is a function of the protective level of the arrester, V_{res}, and the rest of the severity of the voltage surge is absorbed by the arrester.

The rating of an arrester is therefore defined in terms of its energy capability to absorb at least the required energy on each discharge and the number of discharges the arrester may have to perform in quick succession. IEC 60099-4 has prescribed the minimum energy capability that an arrester must possess, at each discharge. The graphs in Figure 18.23 indicate these levels for different classes. It may be noted that an arrester with a higher energy capability level will mean less strain or risk of failure for the arrester, but at a higher cost. A brief procedure to determine the energy level that the arrester may have to absorb on each discharge is given below.

Of the three types of surges noted earlier (Table 18.1) which the arrester may have to sustain and absorb, the switching surge energy would be the maximum that would exist for the longest duration, compared to lightning or very steep-fronted FOWs (Section 17.3) which are of very short duration. Normally, therefore, a switching surge alone is considered for this purpose. During the operation of a surge arrester, a part of the surge, equivalent to the

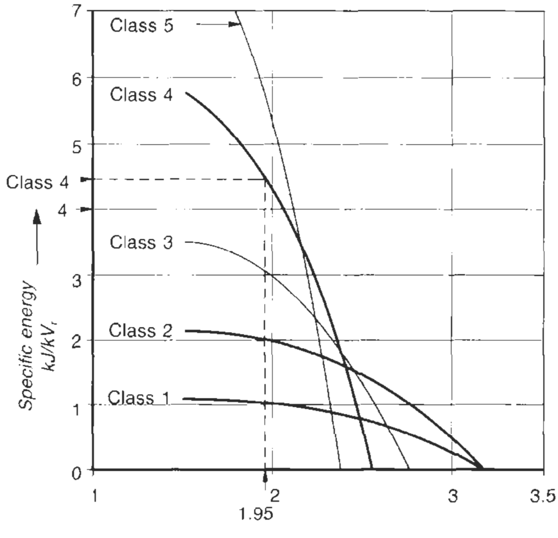

Figure 18.23 Classification of arresters in terms of specific energy kJ/kV$_r$ versus V_{res}/V_r as in IEC 99–4/1991

protective level of the surge arrester, will conduct and appear as the residual voltage across the arrester in terms of its protective level and the rest would be absorbed by it. What is absorbed would determine its absorption capability. For a switching circuit, as shown in Figure 18.18(a), this can be theoretically determined by:

$$W = \frac{(V_t - V_{res})}{Z_s} \cdot V_{res} \cdot 2T \cdot n \times 10^{-3} \qquad (18.10)$$

where

W = energy absorbed in kWs or kJ (1 W = 1 J/s)

V_t = prospective switching surge crest voltage (kV)

V_{res} = Switching surge residual voltage of the arrester (kV)

Note

As in IEC 60099-4, the lowest value of V_{res} must be considered which occurs at a lower switching surge discharge current, such as a switching surge, V_{res}, at 1 kA < 2 kA < 3 kA, etc. Tables 18.9 and 18.11 illustrate this.

Z_s = surge impedance of the affected line

T = travelling time of the switching surge from the arrester to the equipment in μs. The factor 2 is considered to account for the reflection of the incident switching transient wave at the equipment (equation (18.3)). The virtual duration of the surge peak, considered in Table 18.6, also corroborates this.

n = number of consecutive discharges. The energy capability of an arrester is its capability to discharge three such switching surges at an interval of 50–60 seconds each (IEC 60099-4). But since the thermal time constant of ZnO blocks is high (in the range of 60–100 minutes) the time interval of 50–60 seconds does not really matter, and it may be considered as three consecutive discharges for all practical purposes. It is, however, seen that in service, even two consecutive discharges are rare and three may never occur. It is, therefore, sufficient to consider two consecutive discharges for selecting an arrester. The normal practice by leading manufacturers is to specify only the total energy capability for which their arresters would be suitable during consecutive discharges.

Apparently a higher level of V_{res} would mean a lower level of energy absorption by the surge arrester in terms of V_r. For an excessive level of W required, it is better to select a higher V_r. If it jeopardizes the required protection level, then select another type of surge arrester with a higher energy capability.

To determine W from the above it is essential to know the system parameters. Based on system studies of different voltage systems (transmission lines particularly) many data have been collected. Typical data as suggested by IEC 60099-4 are provided in Table 18.6 for a general reference. For secondary transmission or primary distribution networks up to 245 kV too, where a lightning surge forms the basis of selection for the protective level (V_{res}) of the arrester, only the switching surge must be considered to determine energy capability.

Example 18.5 in Section 18.10 illustrates the procedure to determine the energy capability requirement of an arrester for a particular system. The ultimate selection of an arrester is a compromise between its protective level, V_{res}, TOV capability and energy absorption capability.

18.7 Classification of arresters

These are classified by their nominal discharge currents I_n (8/20 s) and surge energy absorption capability during a discharge (k · J/k · V$_r$). Each discharge current is assigned a system voltage according to IEC 60099-4, as noted in Table 18.7. The energy capability of an arrester will vary with the overvoltage conditions of the system. It is therefore essential to ensure that the arrester chosen has sufficient capability to sustain the required system TOV and surge conditions during long years of operation. IEC

Table 18.6 Typical parameters of a transmission line

Line discharge current (kA)	*Line discharge class of arrester*	*Surge impedance of the line $Z_s(\Omega)$*	*Virtual duration of peak $2.T^a(\mu s)$*	*Approx. surge amplitude $V_t(kV)$*
10	1	4.9 V_r	2000	3.2 V_r
10	2	2.4 V_r	2000	3.2 V_r
10	3	1.3 V_r	2400	2.8 V_r
20	4	0.8V_r	2800	2.6 V_r
20	5	0.5V_r	3200	2.4 V_r

Based on IEC 60099-4

[a] These are the line discharge test values to test an arrester, as recommended by IEC and have been considered here for the purpose of selection of an arrester. Refer to Example 18.5.

60099-4 has also recommended the line discharge classes of arresters, based on the required energy level in k · J/ k.V_r and the ratio of V_{res}/V_r (Figure 18.23). The energy capability of a normal arrester produced by leading manufacturers is generally higher than recommended by the IEC for a particular class of arrester. The last column of Table 18.7 and Figure 18.23 recommend the minimum energy capability of different classes of arresters. The class of arrester for a system, particularly for heavy duty, can be easily chosen with the help of these figures for a required level of k.J/k.V_r and a ratio of V_{res}/V_r. Arresters classes 1 to 5 are regarded as heavy duty and classified as station class by ANSI/IEEE-C62.11. For light duty, a distribution class may be selected to economize on cost. The nominal current, rated voltage, V_r, level of protection, V_{res}, and energy capability for such arresters are indicated in Table 18.7 for a particular manufacturer.

The subsequent example will provide a simple step by-step-procedure to select an arrester for a particular application >245 kV.

The application and rating of an arrester is a matter of system study and systematic insulation coordination, likely discharge current during a possible lightning discharge at the location of the installation and experience gathered from similar installations. Different countries may adopt different practices, depending upon the stability of their networks and the type of surges that may arise during the course of operation. Hence, only broad guidelines can be given to choose an arrester. The rest is a decision by the application engineer and his experience of power networks.

18.7.1 Application of distribution class surge arresters

The application of such arresters will be guided by their following basic characteristics:

1. They possess a low-energy handling capability and hence cannot be applied for installations and equipment that may be subject to long-duration (250/2500 μs) switching surges requiring high-energy handling capability. They are, however, suitable to withstand an FOW, as this requires a very low energy handling capability which such arresters do possess.
2. They also pose limitations for installations that connect a number of cables and capacitor banks, as these also require a higher energy handling capability.
3. They offer a relatively higher V_{res} and may generally not be suitable for protection of equipment that has a low BIL. The BIL of a rotating machine or a dry type transformer, for instance, may fall lower than the V_{res} of such arresters and the equipment may remain unprotected.
4. Basically they are light-duty arresters and must be installed at locations that are not directly exposed to lightning strikes.

These arresters are therefore employed for installations and equipment that are not so critical as to cause a shutdown of the power system. Likely applications may thus be small distribution networks and equipment such as a distribution transformer, feeding residential or small industrial loads, not directly exposed to the atmosphere and hence to direct lightning strikes. Such installations are reasonably shielded, as when installed within a city. In Table 18.8 we provide typical data for an 11 kV surge arrester widely employed for the distribution of power. For higher ratings, consult the manufacturer or their data sheets. These arresters are normally used for protection against lightning surges rather than switching surges. Lightning surges discharge only low energy which such arresters can withstand.

With the above in mind, 1.5 and 2.5 kA arresters are not being used by many power networks, presumably

Table 18.7 Classification of arresters

Arrester line discharge class		*Nominal discharge current at lightning impulse (8/20/μs) kA*		*Rated voltage V_r*	*Typical energy capability of arresters produced*
As in ANSI	*As in IEC 60099-4*			*as in* IEC 60099-4 *kV*	*kJ/kV$_r$*
Station class	1	10[a]	up to 400 kV	$3 \le V_r \le 360$	Generally more than recommended as in graphs of Figure 18.23.
	2	10[a]			
	3	10[a]			
	4	20[a]	750 kV and above	$360 < V_r \le 750$	
	5	20[a]			
Distribution class	–	5		up to 132	Not significant for the purpose of arrester selection
	–	2.5[c]		up to 36	
	–	1.5[c]		[b]	

Notes

[a] Selection of any arrester will depend upon the duty it has to perform (light duty for indoor and heavy duty for outdoor installations) and the required energy absorption capability.

[b] Yet to be defined by IEC 60099-4, but generally for low-voltage systems. Not often in use for power system applications.

[c] The application of such arresters is noted in Section 18.7.1.

Table 18.8 Technical details of distribution and stations class lightning arresters

	Parameters		*Distribution class*	*Station class*[a] *(for motor protection)*	
1	Rated voltage	kV r.m.s.	9	6	3
2	Nominal discharge current (8/20 μsec.)	kA peak	5	10	10
3	MCOV	kV r.m.s.	7.65	5.5	2.8
4	Max. residual voltage (kV peak) at:				
	(a) Lightning current impulse (8/20 μs) peak				
	(i) 2.5 kA		29	–	–
	(ii) 5 kA		30	17.7	9.31
	(iii) 10 kA		33	19.0	10.0
	(iv) 20 kA		36	21	11.5
	(b) Switching surge residual voltage (1.0 kA, 30/60 μs)	kV peak	30	15.3	8.1
	(c) Steep current impulse (1/2 μs)	5 kA peak	33	–	–
		10 kA peak	40	21.5	11.5
5	Long duration discharge class: (defines the energy capability)				
	(a) Current	A peak	75	–	–
	(b) Virtual duration of peak	μs	1000	–	–
6	High current (4/10 μs)	kA peak	65	100	100
7	Temporary power frequency overvoltage capability	(kV r.m.s.),			
	(i) 0.1 second		10.5	b	
	(ii) 1.0 second		10	b	
	(iii) 10.0 seconds		9.5	b	
	(iv) 100 seconds		9.2	b	

Notes

[a] For 11 kV motors refer to Table 18.9.

[b] TOV capability of the arrester is provided by the manufacturer as standard practice, either in the form of voltage versus time data, as given in column 1, or a graph. A typical graph is shown in Figure 18.16(a).

[c] To assess the loss parameter of the arrester, under normal operating conditions (power frequency), the following data, typical (for the above arresters) may also be obtained from the manufacturer. Also refer to Section 18.2.

Reference current: 1.0 mA

Leakage current at MCOV,

(i) Resistive 3.0 mA

(ii) Capacitive 0.8 mA

Courtesy: Elpro International

because of their frequent discharges and rapid failures and an underprotection to the power network or the equipment. They are generally employed as resistors to absorb switching voltage spikes* or surge transferences in household appliances, uninterrupted power supply (UPS) systems, computers and similar applications. For power applications, such as small distribution networks and distribution transformers etc., 5 kA surge arresters alone are in common practice. For distribution lines running through long open terrains, such as for rural electrification, however, the practice may be different once again, in view of higher degree of exposure of the lines and the terminal equipment to direct lightning strikes.

18.8 Surge protection of motors

The following are a few basic aspects that must be kept in mind while attempting to protect a rotating machine from system surges:

1. The surge arrester must be suitable for absorbing energy of long-duration (250/2500 μs) switching surges.
2. A rotating machine is a low BIL equipment. The arrester must offer a low V_{res} to protect the machine adequately.
3. A capability to sustain FOWs if they arise during switching operations.

A distribution class arrester may not offer adequate energy absorption capability, particularly for the energy of a long-duration switching surge. The residual voltage, V_{res}, of such arresters is normally high and may not offer adequate protection for the machine. They are, however, suitable for withstanding and absorbing energy of a short-duration FOW. A distribution class arrester is thus not capable of protecting a rotating machine.

A surge capacitor too, when used in parallel to supplement such an arrester, will not be able to make the arrester suitable for such a duty. This is effective only against very steep surges having a very high surge frequency of 10 kHz and more. The frequency of a surge can be determined by

$$f_s \approx \frac{10^3}{4t_1} \text{ kHz } (t_1 \text{ is in } \mu\text{s}) \qquad (18.11)$$

---

*Voltage spikes may have high amplitudes but are of extremely short duration, like an FOW.

Table 18.9 Protective characteristics of gapless station class surge arresters for a nominal discharge current of 10 kA[a]

1	System voltage (50 Hz) kV	420	245	245	***145***	123	72	36	36	24	12	12
2	Rating of surge arrester (at the reference current) kV	390	216	198	***120***	96	60	36	30	18	12	9
3	Discharge class	III	III	III	***III***	III	II	II	II	I	I	I
4	Energy dissipation capability cumulative operation (kJ/kV$_r$)	10	10	10	6.5	6.5	4.5	4.5	4.5	2.5	2.5	2.5
5[b]	High current impulse withstand of 4/10 μs wave shape kA	100	100	100	100	100	100	100	100	100	100	100
6	Reference current of the arrester at ambient temperature mA	5	5	5	3.25	3.25	2.25	2.25	2.25	1.5	1.5	1.5
7	Components of the continuous leakage current at COV											
	Resistive μA peak	400	400	400	400	400	400	400	400	400	400	400
	Capacitive μA peak	1500	1500	1500	1500	1500	1500	1500	1500	1500	1500	1500
8	Watt loss at MCOV per kV of rated voltage W/kA	0.25	0.25	0.25	0.25	0.25	0.25	0.25	0.25	0.25	0.25	0.25
9	Maximum continuous operating voltage kV r.m.s.	303	178	168	102	81	52	30.5	25.5	15	10	7.65
10	Max. residual voltage at lightning impulse of 8/20 μs wave kV peak											
	5 kA	860	567	518	333	249	162	103	85	60	38	33
	10 kA	900	602	550	***355***	264	175	110	90	65	40	35
	20 kA	957	668	610	390	304	202	128	104	75	46	41
11	Maximum residual voltage at switching current impulse of 30/60 μs, 1 kA	780	496	457	***294***	221	138	87	71	52	32	28
12	Maximum residual voltage at steep-fronted impulse (1/20 μs, IEC 60099-4) at 10 kA	1050	654	600	***386***	288	202	124	101	73	45	40
13	Temporary power frequency overvoltage capability											
	(a) 0.1 second kV peak	705	397	364	220	156	97	58	48	29	19	14
	(b) 1.0 second kV peak	580	382	350	212	149	93	56	46	28	18	14
	(c) 10.0 seconds kV peak	565	367	336	203	142	89	53	44	26	17	13
	(d) 100.0 seconds kV peak	550	305	280	169	135	84	51	42	25	16	12

[a] These are typical figures and can be varied by the manufacturer to suit an application.

[b] To identify the suitability of the arrester on direct lightning strikes.

Courtesy Elpro International

The first peak being more relevant, we have therefore considered it's the rise time to determine the virtual frequency of the surge. This frequency, for a long-duration switching surge (high t_1), can be quite low for the surge capacitor to acquire enough reactance

$$\left(X_C = \frac{1}{2\pi f_s \cdot C_s}\right)$$

such that the surge arrester alone may have to sustain the bulk of the surge. The surge capacitor provides only meagre support. The basic use of surge capacitors is to absorb only the FOWs and reduce their steepness to make them safe for the turn insulation of the machine. When a switching operation commences, initially it is only a long-duration switching surge that generates. It is only after restrikes of the interrupting contacts that it amplifies to FOWs. The capacitor will activate only after the long-duration switching surge amplifies to an FOW. For all practical purposes, therefore, the arrester alone has to be suitable for handling such surges, irrespective of whether it is supplemented by a surge capacitor. See also Example 17.5.

Arresters for such applications are therefore designed especially with low V_{res}, at steep surges and a high energy absorption capability. Only a station class surge arrester is normally preferred for such applications, and where steep-fronted surges are envisaged, these arresters too may be supplemented with a surge capacitor. Table 18.8 also provides data for motor protection station class surge arresters. For 11 kV voltage systems, refer to Table 18.9. Since a surge arrester is normally an engineered item to suit a particular application, these data are only for general reference. For exact application and type of installation, it is always advisable to consult the manufacturer.

18.9 Pressure relief facility

A surge arrester is a sealed unit to save it from all atmospheric hazards. It is normally filled with air. Explosions of surge arresters have been noticed during service. Explosion of a porcelain housing is dangerous, as the shell splinters can cause great damage to nearby bushings, insulators and other equipment and also maintenance personnel if working in the vicinity.

It is possible that ZnO elements may break down in time due to thermal cracking as a result of system TOVs occurring frequently or existing for long durations, or while clearing a lightning or a switching surge and even subsequent to that. Breakdown of ZnO elements into splinters may collide with the main porcelain housing. But most damage is caused by a flashover between the ZnO elements and the side walls of the housing, which may result in puncture or crackdown. It may lead to a cascading effect and cause an eventual short-circuit within the housing and result in a very heavy ground fault current $(V_l / \sqrt{3} \cdot Zg)$ through it.

The fault current may cause a flashover and rises in the internal temperature and pressure of the housing. It is extremely important to make provision to release this pressure, otherwise it may lead to an explosion of the housing, scattering splinters like bullets in the vicinity. This is dangerous and must be avoided. The pressure relief capacity must be such that there will be no violent explosion of the housing during a failure. Although it may shatter, the arrester's fractured pieces should not fall beyond a circle of a radius equal to its height, somewhat similar to the properties of safety glass windscreens used in a car. International specifications recommend that on a pressure build-up, the hot gases will escape through the pressure relief diaphragm or the housing may simply collapse as a result of thermal shock. An arrester that is vented must be quickly replaced.

This is achieved through a pressure relief system in the form of a pressure relief diaphragm at the top of the housing. The pressure relief system is designed for the system fault level. To test the pressure relief system, IEC 60099-4 and IEC 60099-1 have also specified the test current of the same magnitude as the fault current of the system, but for a very short duration, of the order of 0.2 second or so. This brief period is enough to burst or shatter the housing of the arrester, hence a longer duration is of no relevance.

The practice for heavy-duty arresters is to eliminate the causes of internal flashover between the ZnO elements and the housing at the manufacturing stage. Different manufacturers have adopted different methods for achieving this. One such method is providing a barrier of an insulating material not affected by heat and arcing, such as an FRP (fibre reinforced plastic) tube between the housing and the ZnO elements.

18.10 Assessing the condition of an arrester

To ensure adequate safety for a system and its terminal equipment against overvoltages and voltage surges it is essential to ascertain the soundness of the arrester at regular intervals. It should be possible to do this when it is in service without taking it off from the lines. If deterioration of the ZnO elements is detected it may need more frequent future services or replacement of the arrester. It can now be planned well in advance. The requirement is similar to ascertaining the condition of power capacitors when in service (Section 26.2). Like a capacitor, an arrester deteriorates too with time due to degradation of the dielectric strength of its ZnO elements.

ZnO is a highly non-linear resistor element. The success of an arrester will depend upon its low, continuous resistive leakage current Figure 18.4(a) to maintain low loss and low heating over years of continuous operation. When the ZnO blocks start to deteriorate which is a slow process as discussed earlier, the leakage current starts rising from its original level. The rise in current is rich in third harmonic component due to the non-linear characteristic of the ZnO blocks. Other reasons for degradation in the dielectric properties and a rise in current may be one or more of the following:

- Ingress of moisture through the seals, although Silicagel is provided beneath the arrester sealing to absorb the moisture.
- Failure of ZnO elements during or after clearing a few surges.
- Premature ageing of the ZnO elements.
- Temperature variations. The rise in I_r is rapid at higher operating temperatures.
- Frequent system voltage variations, and
- Being continuously energized

A rise in leakage current is not desirable and is indicative of deterioration of the ZnO blocks, which may lead to failure. It is therefore necessary to monitor the leakage current and detect a possible failure beforehand and take corrective steps in advance. The maximum safe leakage current is specified by the arrester manufacturer as a relation between I_r and its third harmonic component, I_{3r}. I_{3r} is expressed in terms of IZnO as discussed later. It varies with deterioration of the arrester and is used as a reference parameter to assess the arrester's condition. As the actual leakage current measured through IZnO starts rising and approaches the maximum leakage current in healthy condition closer monitoring of the arrester becomes essential, to avoid an abrupt failure or explosion. Refer to Table 18.10 to monitor the condition of the

Table 18.10 Log book to monitor the condition of an arrester when in service

Date of measurement	*Healthy* $IZnO_{(h)\,max.}$[a] *provided by the arrester manufacturer*	*Actual measurement of* $IZnO_{(a)}$ *at site*[b]		*Likely condition of the arrester*
	μA	*μA*	*As % of* $IZnO_{(h)}$	
1st year	250	70	28	Good
3rd year		90	36	Good
5th year		115	46	Good
7th year (December)[c]		160	64	Signs of deterioration
8th year (May)[c]		220	88	Sign of rapid deterioration Recommended for servicing around this time
8th year, (November)[c]		300	120	Requires servicing or replacement

[a] $IZnO_{(h)}$ = maximum leakage current in normal conditions.
[b] $IZnO_{(a)}$ = actual leakage current measured at site.
[c] Closer monitoring recommended.
The above figures are purely hypothetical.

Notes

Monitoring by such an instrument can be carried by installing it permanently or by using it as a portable instrument. Even when connected permanently, the measurements are taken at long intervals for short durations for periodic checks of the arrester. The table suggests only likely check periods, which may vary with environmental conditions and the quality of the system voltage. Higher discharges or frequent switchings of the line breakers, for instance, may deteriorate the ZnO blocks more quickly and require more frequent readings than for systems having lower discharges or switchings.

arrester. To measure I_r, let us analyse the basic circuit of an arrester as considered in Figure 18.5, where

I_r = loss component and is about 5–20% of I_c under normal operating conditions. Any change in its value will contain a third harmonic component because of its non-linearity. It will vary with system voltage and operating temperature.

I_c = leakage capacitive component leads I_r by 90°. It also depends upon the system voltage and the operating temperature. It is, however, independent of I_r and remains almost unaffected by the deterioration of ZnO blocks, i.e. change in I_r.

IZnO = Total leakage current of the arrester. It also rises with system voltage and operating temperature. Under healthy conditions this current is very low (in the range of μA).

Ideally, measuring the variation in IZnO should be enough to determine the condition of an arrester. But it is not so, as it does not provide a true replica of I_r for the following reasons:

- **System voltage harmonics** With deterioration of the arrester, I_r rises and so does its third harmonic component, because of non-linearity of the ZnO blocks. But IZnO also measures the harmonics present in the system voltage, particularly the third harmonic. The system harmonics are also magnified by the leakage capacitances of the arrester. Since an arrester is connected between a phase and the ground, the third harmonic of the system finds its path through the grounded arrester and distorts the third harmonic of the ZnO blocks caused by their deterioration.
- **Uneven distribution** of C along the arrester (Lundquist *et al.*, 1989)
- **Pollution by the surroundings**, such as by dirt and ingress of moisture. In normal conditions this also raises I_c and IZnO and
- **Corona effect** All such factors may influence the I_r and IZnO in different proportions and be detrimental in assessing the actual variation in I_r through IZnO. IZnO therefore cannot be regarded as a true replica of I_r monitoring IZnO may not accurately assess the actual condition of the arrester. To use IZnO to assess the condition of an arrester, it is essential to separate I_r from it.

The greatest effect of ageing is reflected by the variation in its resistive current, which is rich in the third harmonic. Variation in I_r is used in assessing the condition of an arrester. By conducting laboratory tests to determine the characteristics of an arrester, we can establish a ratio between the total leakage current, IZnO and the content of I_r, to assess the condition of the arrester. If we can monitor this current, we can monitor the condition of the arrester. Below we discuss briefly one such method by which this component can be separated out.

Leakage current monitor

(A diagnostic Indicator of metal oxide surge arresters in service).

Note

Instruments operating during discharges alone are basically surge counters and can only indicate the number of discharges. They provide no information on the condition of the arrester.

To measure the resistive leakage current, I_r, alone is a complex subject. However, there are a number of methods to determine this. IEC 60095-5 mentions a few methods by which the resistive leakage current, I_r, can be measured through IZnO. The main problem faced in all these methods is the presence of a system voltage third harmonic that finds its way through the grounded arrester and shows up in IZnO. Therefore, unless the system voltage third harmonic is eliminated from IZnO, it will not provide a true replica of the arrester's condition. Below we discuss one more recognized method (See Lundquist *et al.*, 1989) by which an attempt is made to separate out the system voltage third harmonic from IZnO. The method is based on extraction of I_r by third-order harmonic analysis of IZnO. This is achieved by providing an electric field probe located at the grounding end of the arrester. The probe compensates the third harmonic present in the system voltage so that the current measured at the ground end of the arrester contains only the third harmonic of I_r. Harmonics, other than the third even if they are present in the system or IZnO, are of little relevance, as the instrument analyses only the third harmonic.

The instrument separates out I_r and I_c and provides a direct reading of I_r and hence the condition of the arrester. Refer to Table 18.10 providing a brief procedure to monitor the condition of an arrester through such a monitor.

A typical layout of such an instrument and its accessories is shown in Figure 18.24(a). It consists of:

- Leakage current monitor – this can be connected perma-nently for continuous reading or periodic monitoring. The normal practice is to measure only periodically for a short period to take average measurements on an hourly, daily, monthly or yearly basis. When not connected permanently, the instrument can also be used as a portable kit to monitor the condition of other arresters installed in the vicinity.
- Field probe – to compensate the third harmonic of the system voltage to make the IZnO free from the third harmonic of the system voltage. This method of I_r measurement therefore provides more accurate and closer monitoring of the arrester.
- Clip-on CT – to measure IZnO and is mounted at the grounding end of the arrester.
- Current probe – to measure the third harmonic component of I_r. It is then converted to actual I_r from the ZnO characteristic data provided by the arrester manufacturer, I_r versus I_{3r}, corrected to the site operating temperature and voltage. The value of I_r is then used to assess the condition of the arrester.
- Adapter (connector) – to connect the CT with the instrument.

Figure 18.24(b) illustrates the use of a leakage current monitor. The instrument can be used to display or monitor on a computer remotely and store data at intervals as required to provide diagnostic information. Now it is easier to take corrective measures in time. The instrument can also be programmed to give an alarm at a preset value of I_r when the actual operating conditions exceed this.

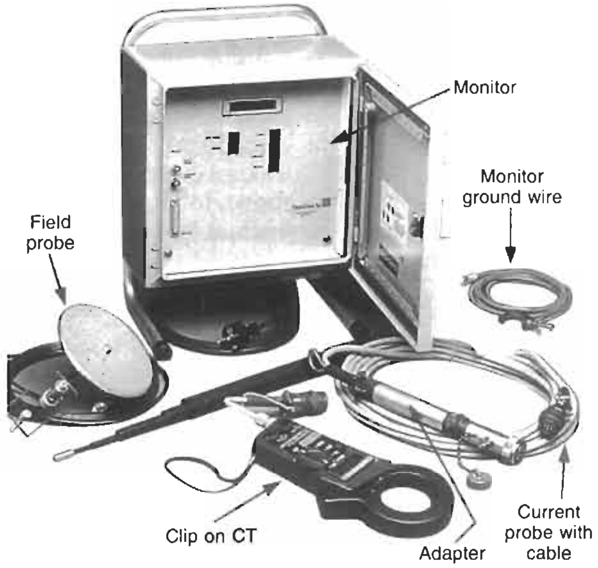

Figure 18.24(a) Leakage current monitor with accessories (Courtesy: TransiNor As)

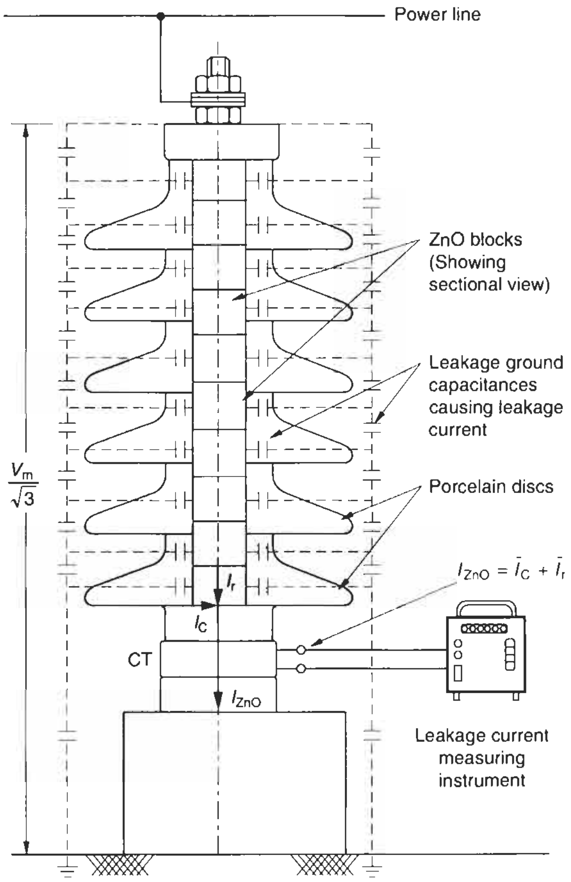

I_{ZnO} – Surge arrester leakage current free from system voltage 3rd harmonic
I_C – Free from system voltage 3rd harmonic
I_r – With 3rd harmonic current component

Figure 18.24(b) Measuring leakage current through an arrester during normal operation

Example 18.5
Step-by-step selection of a surge arrester for the protection of equipment mounted on a 400 kV transmission line.

Considerations	Data	
Nominal system voltage (V_l)	400 kV(r.m.s.)	
Maximum system voltage (V_m)	420 kV(r.m.s.)	
In per unit (p.u.)	$1 \text{ p.u.} = 420 \times \frac{\sqrt{2}}{\sqrt{3}}$ = 343 kV	
Maximum continuous operating voltage (MCOV), $\frac{V_m}{\sqrt{3}} = V_c$	$\frac{420}{\sqrt{3}} = 243$ kV (max.)	
Temporary overvoltages (TOVs) as in Table 18.5	OV factor	tripping time
(i) Due to a ground fault for a solidly grounded system with a GFF of 1.4 TOV$_1$	1.4	3 sec
(ii) TOV due to load rejection TOV$_2$	1.1	1 sec
(iii) TOV due to a short-circuit fault TOV$_3$	1.1	3 sec

Considering conditions (i) and (ii) occurring at the same instant,

$\therefore$ total TOV = 1.4 × 1.1 = 1.54 for 3 seconds

TOV factor as in Figure 18.16(b), $K = 1.13$

$$\therefore \; V_r = \frac{1.54 \times 243}{1.13} = 331 \text{ kV}$$

For this voltage, we have selected a Class 4 arrester, which has the nearest next higher rating as in Table 18.11 as

$V_r = 336$ kV

As regards the primary selection of the arrester, it is complete at this stage. But this selection must be checked for its adequate protective level and the energy absorption capability

(A) Checking for the protective level

For this rating, the arrester protection levels are:

- V_{res}(max) for a switching impulse wave of 1 kA for the purpose of energy capability = 654 kV.
- For switching impulse protective margin at 2 kA = 676 kV.
- V_{res}(max) for a 20 kA lightning impulse (8/20 μs) = 844 kV.
- V_{res}(max) for a 0.6 μs FOW from Figure 18.20 = 1.12 × 844 = 945 kV.

  BIL of the equipment to be protected, from Table 13.3 list I (considering the lower side to save on the cost of equipment)
- For switching surges = 950 kV
- For lightning surges = 1175 kV
- For very fast-rising surges (FOWs) = 1175 kV (assumed). This value must be obtained from the manufacturer of the equipment to be protected.

To check the protective margins:

Type of surge	*Margins recommended as in Table 18.2*	*Margin available*	*Suitability of the arrester*
(i) For switching surges	1.15	$\frac{950}{676} = 1.40$	OK
(ii) For lightning surges	1.05	$\frac{1175}{844} = 1.39$	OK
(iii) For FOWs	1.15	$\frac{1175}{945} = 1.24$	OK

Table 18.11 Protective characteristics of a gapless station class surge arrester for, (1) Line discharge class 4, and (2) Single impulse energy capability = 7 k.J/k.V$_r$

System voltage	*Rated voltage*	*Max. cont. operating voltage (COV)*	*MCOV as in ANSI tests*	*TOV capability for*		*Maximum residual voltage with current wave*						
						Switching surges[a]			*Lightning surges 8/20 μs*			
				1s	10 s	1 kA	2 kA	3 kA	5 kA	10 kA	20 kA	40 kA
kV$_{r.m.s}$	kV$_{r.m.s}$	kV$_{r.m.s.}$	kV$_{r.m.s}$	kV$_{r.m.s}$	kV$_{r.m.s}$	kV$_{peak}$	kV$_{peak}$	kV$_{peak}$	kV$_{peak}$	kV$_{peak}$	kV$_{peak}$	kV$_{peak}$
420	330	264	267	383	363	642	664	680	718	759	829	911
	336	267	272	390	370	***654***	***676***	693	731	773	***844***	928
	360	267	291	418	396	701	724	742	783	828	***904***	994
	372	267	301	432	409	724	748	767	810	856	934	1027
	378	267	306	438	416	736	760	779	823	870	949	1044
	381	267	308	442	419	741	766	785	829	877	957	1052
	390	267	315	452	429	759	784	804	849	897	979	1077
	396	267	318	459	436	771	796	816	862	911	994	1093
	420	267	336	487	462	817	845	866	914	966	1055	1160

[a] Any impulse with a front time longer than 30 μs.
Courtesy: ABB

Notes

1. The above selection of the arrester may be considered as having taken account of reflections at the terminals.
2. When such an arrester is installed on the system, it takes care of switching, lightning or steep to very steep rising surges, irrespective of their amplitudes.
3. It is presumed that the protective distance (distance of the protected equipment from the arrester) is short and within safe limits. It too must be checked before a final selection of the arrester, as explained in Section 18.6.2. The above selection, however, seems to be appropriate for a distance up to 8–10 m as considered in Example 18.4.
4. The arrester selected has protective margins much greater than the minimum required. In fact even considering a protective distance up to 8–10 m, it would be possible to select the arrester with the next higher V_{res} to enhance the life of the arrester without jeopardizing the safety of the equipment.

(B) Checking for the energy capability

It is sufficient to check this for systems of range II alone, as the energy requirements for systems of range I may be moderate, since now the lightning surges are found to be more severe than the switching surges. The lightning surges dissipate a very low energy due to their extremely short duration, while a normal arrester would be adequate to absorb much more energy than this.

W (for each discharge)

$$\simeq \frac{V_t - V_{res}}{Z_s} \cdot V_{res}.2.T.\ 10^{-3}\ \text{kJ} \qquad (18.10)$$

To assess the energy capability of the arrester more realistically, let us consider the established system parameters as in Table 18.6 to determine the maximum energy discharge through the arrester,

where

$V_t = 2.6\ V_r$

$= 2.6 \times 336$

$= 874$ kV

$V_{res} = 654$ kV (for $I_n = 1$ kA)

$Z_s = 0.8 V_r$

$= 0.8 \times 336$

$= 269\ \Omega$

$2.T = 2800\ \mu s$

Note

The time of travel from the point the lightning strikes on the overhead lines to the arrester, considering a line length of approximately 420 km and speed of propagation of the surge as 0.3 km/μs,

$$T = \frac{420}{0.3} = 1400\ \mu s$$

Accounting for reflections, the total time must be considered as 2 × 1400 or 2800 μs. Accordingly, 2800 μs is specified by IEC 60099–4 for the testing of the arrester under the worst conditions. The arrester must also have the capability to successfully discharge the prospective surge under such conditions.

$$\therefore\ W = \frac{(874 - 654)}{269} \times 654 \times 2800 \times 10^{-3}\ \text{kJ}$$

$$= \frac{220}{269} \times 654 \times 2800 \times 10^{-3}$$

$$= 1498\ \text{kJ or } \frac{1498}{336} = 4.46\ \text{kJ/kV}_r$$

The arrester chosen has a total energy capability of 7 kJ/kV$_r$ (from the manufacturer's catalogue). In service the arrester will be required to discharge much less energy than this as the distance of the arrester from the point of surge origination may be much smaller than considered.

Line arrester class can also be selected quickly from Figure 18.23, corresponding to V_{res}/V_r. In the above case, it is 654/336, i.e. 1.95, corresponding to which also the class of arrester works out as '4', as considered by us, and which will have an energy absorption capability of more than 4.5 kJ/kV_r per discharge.

(C) Checking for reflections and transferences

We have considered protection of both 400 kV transformers, one for primary transmission and the other for secondary transmission. We will now analyse the influence of surge reflections and transferences of a surge occurring on the 400 kV primary transmission bus as shown in Figure 18.25 and its effects on segments *A* and *B*.

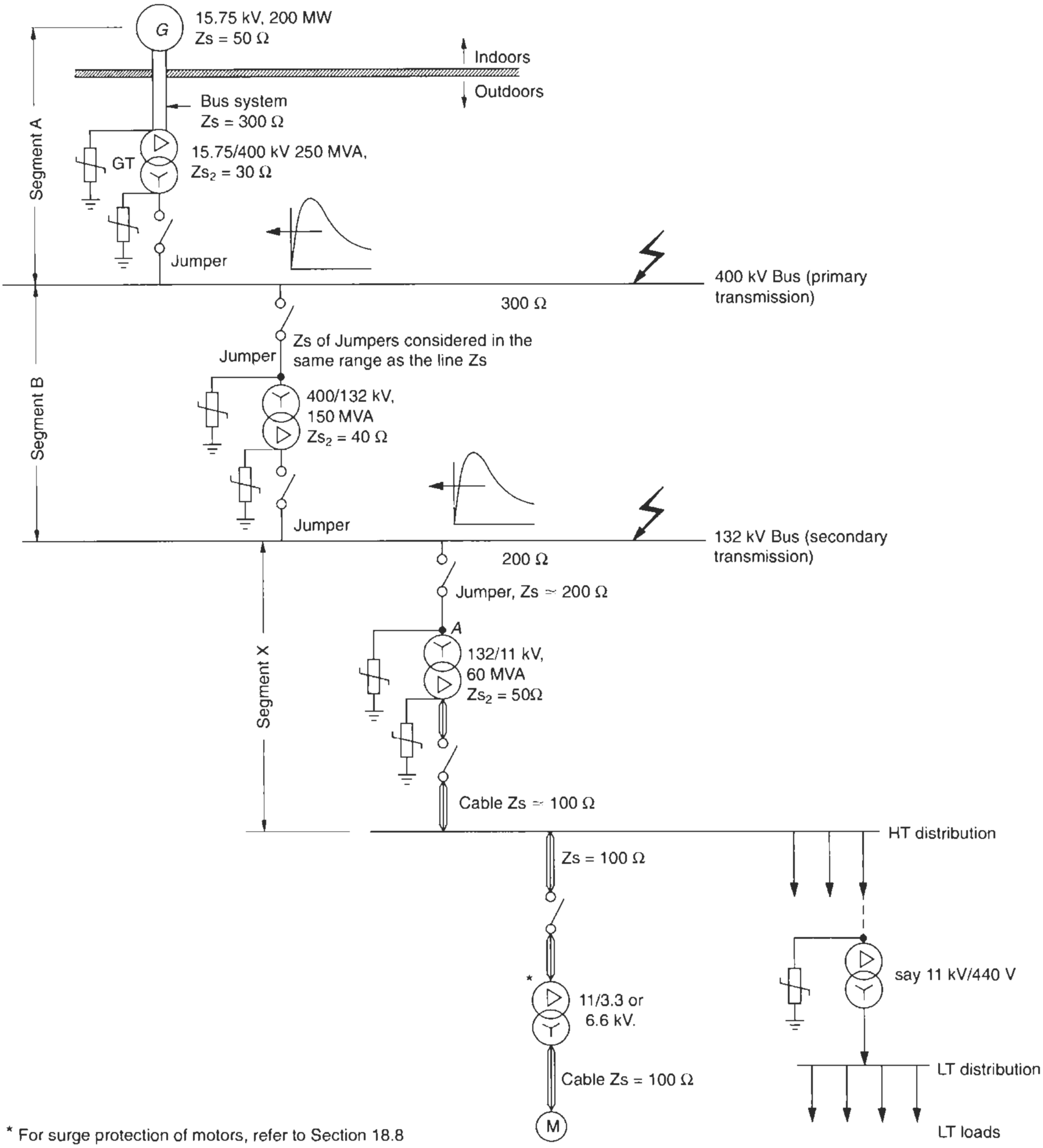

* For surge protection of motors, refer to Section 18.8

Figure 18.25 Surge protection analysis of potential locations for the network illustrated in Figure 18.15

	Segment A	*Segment B*
Basic parameters	$Z_{s1} = 300\ \Omega$ $Z_{s2} = 300\ \Omega$	$Z_{s1} = 300\ \Omega$ $Z_{s2} = 40\ \Omega$
(a) Reflection of surges: As the arresters are being provided at the primary of each transformer, this aspect need not be considered	Low	Low
(b) Surge transferences to the LV side		
(i) Capacitive transference (initial voltage spike)	$Vt_c = \frac{C_p}{C_p + C_s} V_t \cdot p$	
Assuming $\frac{C_p}{C_p + C_s}$	0.4 The actual value may be much less than this when obtained from the transformer manufacturer	
p for a Y/Δ transformer $V_{t(FOW)}$ $\therefore V_{tc}$	1.15 945 kV peak $= 0.4 \times 945 \times 1.15$ $= 434.7$ kV peak	
BIL (lightning) of the transformers' LV sides from Table 13.2	for 15.75 kV LV ($V_m = 17.5$ kV) = 95 kV peak	for 132 kV LV ($V_m = 145$ kV) = 650 kV peak
Minimum protective level required	95/1.05 = 90.5 kV peak which is too low compared to V_{tc} and requires an arrester on the LV side or provision of surge capacitors across the secondary windings, such that $\frac{C_p}{C_p + C_s + C'} < \frac{90.5}{434.7}$ The value of C' can be calculated if values of C_p and C_s are known. *Note* Even then a surge protection will be essential for the tertiary, if a tertiary is provided.	650/1.05 = 619 kV peak Protective margin available $= \frac{650}{434.7} \simeq 1.49$ which is adequate and no more protection is necessary

Note The above analysis also corroborates that surge transferences are more severe in high ratio transformers than low ratio ones (Section 18.5.2)

(ii) Inductive transference	$V_{ti} = \text{p.q.r.}\ V_t/n$	
Assuming	$p = 1$ for a long-duration switching surge for inductive transference $q = 1.8$ for a long-duration switching surge $r = \frac{\sqrt{3}}{2}$ from Figure 18.14 for a Y/Δ transformer with surges of opposite polarity appearing on two phases	
	$n = \frac{420}{17.5}$ $= 24$	$\frac{420}{145}$ $= 2.9$
$V_t = V_{res}$ (switching)	676 kV peak $\therefore V_{ti} = 1 \times 1.8 \times \frac{\sqrt{3}}{2} \times \frac{676}{24}$ $= 43.9$ kV peak	$= 1 \times 1.8 \times \frac{\sqrt{3}}{2} \times \frac{676}{2.9}$ $= 363$ kV peak
Power frequency withstand capacity of the LV windings from Table 13.2	38 kV r.m.s.	275 kV r.m.s
$\therefore$ Protective margin	$= \frac{38\sqrt{2}}{43.9}$ $= 1.22$	$= \frac{275\sqrt{2}}{363}$ $= 1.07$
	This is adequate and no additional surge protection is necessary	This is too low. But it is possible to make it up by selecting the arrester at the primary with a lower switching V_{res}, if possible, or provide an arrester at the secondary. Moreover, the response factor, q, is considered very high, which may not be true in actual service and an arrester at the secondary may not be necessary in all probability. The design engineer can use a more realistic factor based on his past experience and the data available from similar installations.

Relevant Standards

IEC	*Title*	*IS*	*BS*
60056/1987	High voltage alternating current circuit breakers	13118/1991	BS 5311/1996
60071-1/1993	Insulation coordination – Definitions, principles and rules	2165-1/1991, 2165-2/1991	BS EN 60071-1/1996
60071-2/1996	Insulation coordination – Application guide	3716/1991,	BS EN 60071-2/1997
60099-1/1991	Surge arrester – Non-linear resistor type gapped surge arresters for a.c. systems.	3070-1/1990	BS EN 60099-1/1994
60099-4/1991	Surge arresters – Metal oxide without gaps for a.c. power circuits	3070-3/1993	BS EN 60099-4/1993
60099-5/1996	Surge arresters. Selection and application recommendations	4004/1990	BS EN 60099-5/1997
61024-1/1993	Protection of structures against lightning – General principles	2309/1989	DD ENV 61024-1/1995 BS 6651/1992

Relevant US Standards ANSI/NEMA and IEEE

ANSI/IEEE-C62.1/1994	Standard for gapped silicon carbide surge arresters for a.c. power circuits
ANSI/IEEE-C62.2/1994	Guide for application of gapped silicon carbide surge arrester for a.c. systems
ANSI/IEEE-C62.11/1993	Metal oxide surge arresters for a.c. power circuits
ANSI/IEEE C 62.22/1997	Guide for the application of metal oxide surge arresters for a.c. systems
ANSI/IEEE 1313.1/1996	Insulation coordination, Definitions, Principles and Rules
NEMA/LS-1/1992	Low voltage surge protection devices

Notes

1 In the tables of Relevant Standards in this book while the latest editions of the standards are provided, it is possible that revised editions have become available. With the advances of technology and/or its application, the updating of standards is a continuous process by different standards organizations. It is therefore advisable that for more authentic references, readers should consult the relevant organizations for the latest version of a standard.

2 Some of the BS or IS standards mentioned against IEC may not be identical.

3 The year noted against each standard may also refer to the year of its last amendment and not necessarily the year of publication.

List of formulae used

Electrical characteristics of a ZnO surge arrester

Characteristic of a ZnO block

$$I = K \cdot V^{\propto} \tag{18.1}$$

K depends upon geometrical configuration, cross-sectional area and length of ZnO Block

$\propto$ = is a measure of non-linearity between V and I

Protective margins

$$\text{Protective margin} = \frac{\text{BIL of the equipment}}{\text{Impulse protection level of the arrester } (V_{\text{res}})} \tag{18.2}$$

Reflection of the travelling waves

Voltage of the reflected wave

$$E' = E \cdot \frac{Z_{S2} - Z_{S1}}{Z_{S2} + Z_{S1}} \tag{18.3}$$

Z_{S1} = surge impedance of the incoming circuit
Z_{S2} = surge impedance of the outgoing circuit

Voltage of the refracted wave,

$$E'' = E + E'$$

$$= E \cdot \frac{2 \cdot Z_{S2}}{Z_{S2} + Z_{S1}} \tag{18.4}$$

E = voltage of the incident wave (incoming wave)
E' = voltage of the reflected wave
E''= voltage of the refracted (transmitted) wave

When the outgoing circuit is inductive,

$$E'' = 2E \cdot \left(e^{-\frac{Z_{S1} \cdot t}{L}} \right) \tag{18.5}$$

L = inductance of the circuit

When the outgoing circuit is capacitive,

$$E'' = 2E \cdot \left(1 - e^{-\frac{t}{Z_{S1} \cdot C}} \right) \tag{18.6}$$

C = capacitance of the circuit

Surge transference through a transformer

(i) Electrostatic transference

$$V_{tc} = \frac{C_p}{C_p + C_s} \cdot V_t \cdot p \qquad (18.7a)$$

V_{tC} = voltage of surge transference
C_p = lumped capacitance between the primary and the secondary windings
C_s = lumped capacitance of the lower voltage side
V_t = prospective voltage surge on the primary side
p = a factor to account for the power frequency voltage already existing when the surge occurs

Dampened surge transference to account for the capacitance C of cables and terminal equipment.

$$V_{tc} = \frac{C_p}{C_p + C_s + C} V_t \cdot p \qquad (18.7b)$$

(ii) Electromagnetic transference

$$V_{tt} = p \cdot q \cdot r \cdot \frac{V_t}{n} \qquad (18.8)$$

p = factor for power frequency voltage
q = response factor of the lower voltage circuit to the arriving long-duration surges
r = a factor that will depend upon the transformer connections
n = transformation ratio of the transformer (V_1/V_2).

Selecting the protective level of an arrester

Protective distance

$$V_s = V_{res} + S \cdot 2 \cdot T \qquad (18.9)$$

V_s = actual surge voltage at the equipment
S = r.r.r.v. of the incoming wave in kV/μs
T = travelling time of the surge, to reach the equipment from the arrester terminals

Energy capability

$$W = \frac{(V_t - V_{res})}{Z_s} \cdot V_{res} \cdot 2T \cdot n \times 10^{-3} \qquad (18.10)$$

W = energy absorbed in kW-s or kJ
V_t = prospective switching surge crest voltage – kV
V_{res} = switching surge residual voltage of the arrester – kV
Z_s = surge impedance of the affected line
T = travelling time of the switching surge in μs
n = number of consecutive discharges

Surge protection of motors

For long-duration switching surges,

$$\text{Surge frequency, } f_s \simeq \frac{10^3}{4t_1} \text{ kHz} \qquad (18.11)$$

t_1 = rise time of the FOW in μs

Further reading

1 ABB, India, *Selection Guide for ABB HV Surge Arresters.* Zinc Oxide Surge Arrester. Technical Information Publ. SESWG/A 2300 E. Edition 2, 1991–02.
2 Brown, P.B. and Miske, S.A., Jr, 'Application of zinc oxide station class arresters', Missouri Valley Electric Association Engineering Conference, Kansas City, Missouri, 13 April 1978.
3 Cotton, H., 'The transmission and distribution of electrical energy – protection against overvoltages'.
4 Csuros L., Overvoltage protection.
5 Electricity Council (ed.), Power System Protection. Peter Peregrinus, Stevenage.
6 General Electric Company, USA, *Transmission*, October 1971 (overvoltage protection).
7 Greanwood, A., *Electrical Transients in Power Systems.* John Wiley, New York.
8 Lundquist, J., Stenstrom, L., Schei, A. and Hansen, B., 'New method for measurement of the resistive leakage currents of metal oxide surge arresters in service', 89 SM 817-8 PWRD, IEEE (1989).
9 Ozawa, J., Mizukoshi, A., Maruyama, S., Nakano, K., Saito K., St Jean, G., Latour, Y., and Petit, A., 'Pressure relief design and performance of metal oxide surge arresters', IEEE-1985.
10 Sakshaug, E.C. and Kresge, J.S. and Miske, S.A. Jr. 'A new concept in station arrester design'.
11 Shirakawa, S., Endo, F., Kitajima, H., Kobayashi, S., Kurita, K., Goto, K., and Sakai, M., 'Maintenance of surge arrester by a portable arrester leakage current detector', *IEEE Transactions on Power Delivery*, **3**, No. 3, July (1988).
12 Society of Power Engineers (India) Bombay Chapter, Seminar on EHV Substations, 24 June 1994.
13 Thoren B., 'Insulation coordination for system voltages of 52 to 800 kV', All India EHV Forum 1979.
14 Walsh, G.W., 'A review of lightning protection and grounding practices', *IEEE Transactions on Industry Applications,* **IA-9,** No. 2, March/April (1973).

19

Circuit Interrupters

Contents

19.1 Circuit interrupters

These are only switching mechanisms and not complete breakers. The operation of an HT interrupter, whether to close or open a circuit, causes certain types of switching surges. Details of such surges and causes of their generation have been given in Chapter 17. Generally, surges are phenomena of HT systems of 2.4 kV and above.

Surges that may appear on an LT system as a result of transference from the HV side of a transformer (Section 18.5.2) are different and not related to switching. Those on an LT system due to switching of static devices (Section 6.13) are not related to the switching of the circuit but to the static devices themselves.

In this chapter we discuss the types of insulating and quenching mediums, their switching characteristics and merits and demerits of their use. We also consider the basic interrupting devices developed over the years, using such mediums, keeping switching surges as the basic criteria in mind. The theory of arc interruption is the same for all switching devices. The following types of breakers have been developed for the purpose of switching and they mostly relate to the HT systems, except where noted:

1 Bulk Oil Circuit Breakers (BOCBs)
2 Minimum Oil or Low Oil Content Circuit Breakers (MOCBs or LOCBs)
3 Air Circuit Breakers (ACBs) – generally for an LT system only
4 Air Blast Circuit Breakers (ABCBs)
5 Sulphur Hexafluoride Circuit Breakers (SF_6 breakers)
6 Vacuum Circuit Breakers (VCBs)

It is for the user to choose the most appropriate circuit breaker to suit requirements, application and cost. Here we discuss briefly the philosophy of circuit interruption and the effect of insulating and quenching mediums on the arc extinction of these breakers. We also deal briefly with the constructional features and application of such breakers. For more details one may refer to the manufacturers' catalogues and literature available on the subject.

To begin our discussions, let us first have a brief review of switching surges discussed above.

19.1.1 During a switch closure

- Switching surges may develop during a closing operation just before the contacts are able to make. It may occur at a stage when the gap (i.e. the dielectric) between the contacts becomes incapable of withstanding the impressed voltage and breaks down. When this occurs, it causes an arc between the contacts leading to such surges.
- Switching surges will also develop when all the three poles of a switching device do not make at the same instant. (Refer to Section 17.7.2(ii)). The surges may have a peak value up to 3–5 p.u. at a surge frequency of 5–100 kHz or more, depending upon the closing circuit constants L and C. They may exist in the system for a very short duration of much less than even one half of a cycle, i.e. up to the closure of the switch only. Typical speeds of interrupters may fall in the range of 1–1.5 mm/ms. Extremely steep (fast-rising) transient surges, up to 3.5 p.u. have been noticed in certain switching circuits, with a front time as low as 0.2 μs.

19.1.2 During a switch interruption

These surges develop when interrupting a highly inductive or capacitive circuit, such that the current phasor lags or leads the voltage phasor by so much that up to a near-full system voltage may appear across the parting contacts on a current zero and cause re-ignition of the arc plasma. (Refer to Section 17.7.3). These surges may also have a peak value up to 3–5 p.u. at a surge frequency of 5–100 kHz or more, depending upon the interrupting circuit constants L and C. They may exist in the system for a slightly longer duration of one half to one-and-a-half cycles (10–30 ms for a 50 Hz system), i.e. up to circuit interruption. Extremely steep transient surges, up to 5 p.u. in certain interrupting circuits, have been noticed with a front time as low as 0.2 μs and even less.

The phenomenon of a switching surge is related to the performance of the switching device, i.e. its speed of operation and ability to quickly rebuild its dielectric strength (deionization of the arc plasma) between the parting contacts after a current zero.

19.2 Theory of circuit interruption with different switching mediums (theory of deionization)

When a live circuit is interrupted, an arc is invariably formed between the parting contacts, the intensity and magnitude of which would depend upon the quantum and the quality (p.f.) of the current being interrupted. The arc, due to its excessive heat, under high pressure or vacuum (the medium in the breaker is maintained thus), forms a plasma in the medium which causes decomposition of the insulating and the quenching medium to a few gases and vapours. The gases so formed then ionize into electrons and protons, which are charged particles conducting in nature, and make the arc conducting as well. How to disperse the heat of the arc plasma quickly for a successful interruption of the circuit is the theory of arc extinction. The types of gases produced and their behaviour, as a consequence of ionization of the insulating and quenching mediums are as follows:

- **Oil in BOCB or MOCB** This decomposes into vapourized and dissociated hydrocarbon, which in turn ionizes into H_2 and other gases and vapours. H_2 constitutes around 70% of all the gases and vapours produced.
- **Air in ACB or ABCB** This ionizes into N_2, O_2 and vapours; N_2 constitutes most of it.

- **SF_6 in SF_6 circuit breakers** This ionizes into sulphur and fluorine.
- **In a VCB** This is not the vacuum but the metal of the parting contacts that becomes vapourized.

The main problem of circuit breaking arises out of the formation of the arc and its prolonged extinction, which may delay the circuit interruption and lead to a restrike of the arc plasma after a current zero. The basic concept of a circuit breaking thus leads to the quickest extinction of the arc plasma. It has caused many engineers and scientists to undertake extensive research and development on the subject over the past 50 years or so to find more suitable mediums and to evolve better techniques to extinguish the arc plasma. The present-day high technology, adopted by the various manufacturers in the field of arc quenching, is the result of these long years of consistent and continuous research and development work.

To achieve a quicker extinction of the arc it is imperative to create one or more of the following conditions:

1 To quench the arc plasma caused during the interruption, quickly and continuously, to ensure that by the next current zero, the arc path is devoid of any traces of arcing. In other words, the contact gap must restore its dielectric strength before the next current zero.
2 To lengthen the arc as shown in Figures 19.11 and 19.12. This is an effort to render the restriking voltage (TRV) insufficient to re-establish an arc across the parting contacts after a current zero. The process increases the resistance of the arc plasma that helps to absorb a part of the TRV by causing a voltage drop across the resistance so created, besides improving the p.f. of the interrupting circuit and thus dampening the restriking voltage (TRV) to far below its peak value by the next current zero. Dampening of TRV at improved p.f. may be observed from curves *a* and *b* of Figure 17.11.
3 Splitting the arc into a number of series arcs (Figure 19.11) so that the input power to the arc becomes less than the heat dissipated during the process of deionization. The more efficient the process of cooling, the better will be the chances of avoiding a restrike and achieving a quicker extinction of the arc.
4 A forced interruption before a current zero, as may occur in an ABCB or VCB, may cause current chopping (Section 19.6, Figure 19.27) giving rise to high TRVs, is not desirable. It is therefore important that the design of the interrupting device be such that a live circuit interrupts only at a natural current zero, as far as possible, to avoid generation of voltage surges. The following techniques have been developed to achieve this:
    - Use of high pressure at the arc plasma to drive away the same.
    - Adopting forced cooling to quench the arc plasma.
    - Use of such constructions that can elongate arc length and reduce the concentration of ions in the arc plasma and hence enhance the dielectric strength between the parting contacts.
    - Pre-inserting a resistor in the interrupter unit to cause a voltage (TRV) drop across it and to also improve the p.f. of the interrupting circuit and making arc extinction easy. The mechanism is made such that a resistance commensurate with the system parameters and switching conditions (which the user has to stipulate for the manufacturer) is inserted into the switching circuit. Insertion is made through the interrupting mechanism immediately, say, by half a cycle before the contacts make or open and is shortened or disconnected immediately on closing or opening of the contacts.

These techniques have been successfully implemented in interrupting devices as noted in Section 19.1.2, being commercially produced by various manufacturers for different voltage systems and applications.

The dielectric properties of different mediums at different contact gaps are illustrated in Figure 19.1. It may be observed, that except the medium of vacuum, which has a near constant or very little rise in dielectric strength from about a gap of 10 mm and pressure about 10^{-3} Torr or less, all other mediums, even air, have a near-linear rise in their dielectric strength with the contact gap.

The dielectric strength can also be enhanced with the rise in pressure of the medium, except oil, which cannot be compressed, and can be considered as having a near-constant dielectric properties. The characteristic of air at very low pressures is illustrated in Figure 19.2. The behaviour of air at very low pressures (below 10^{-4} Torr) is extensively utilized in vacuum interrupters.

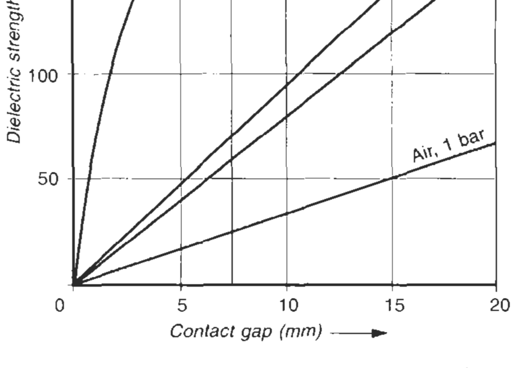

Figure 19.1 Dielectric strength of different mediums as a function of contact gap

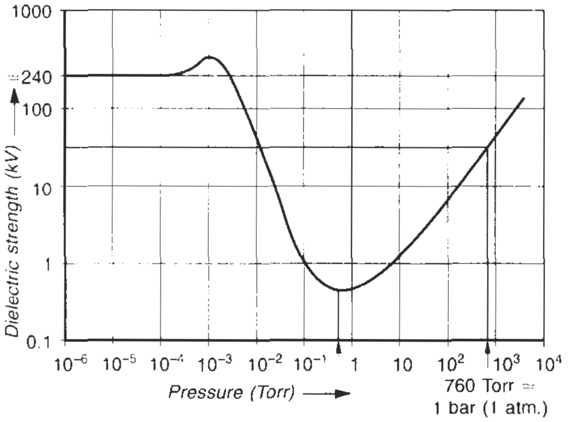

Figure 19.2 Dielectric strength of air at different pressures at a uniform contact gap of 10 mm (1 Torr ≃ 1 mm head of Hg)

19.3 Theory of arc plasma

The arc plasma is caused during an interruption of the live contacts, and also just before closing the contacts, when the contact gap falls short of the required dielectric strength to withstand the impressed voltage. When an arc is caused the gases present in the arcing chamber, under the influence of high temperature of the arc plasma and the high pressure or high vacuum maintained within the arcing chamber, become ionized. They liberate protons (positive ions, positively charged, heavier particles) and neutrons (uncharged particles) surrounded by electrons (negatively charged lighter particles (Figure 19.3)). The theory of arc extinction relates to the physics and behaviour of these electrically charged particles that are responsible for a restrike of the TRV even after a current zero. The effectiveness of the medium and the design of the arc chamber to diffuse these electrically charged particles to neutrons as quickly as possible determines the ability of one type of breaker over others. In fact, the theory of arc extinction is the theory of deionization (neutralization) of the electrically charged protons and electrons. The theory may be briefly explained as follows.

The positive ions (protons) present in the arc plasma move to the cathode (negative pole) and neutralize (deionize) the electrons there. Similarly, the negative ions (electrons) move to the anode (positive pole) and become absorbed there. Thus the process continues until all the plasma is neutralized and contains only neutrons to extinguish the arc. In fact, the concentration of ions between the parting contacts gradually becomes diluted by the deionization of protons and the absorption of electrons at the anode, and a stage is reached when adequate dielectric strength between the parting contacts is restored to extinguish the arc. It is not necessary for all the ions present in the plasma to be deionized to extinguish the arc, rather a stage when they are not able to hold the arc. This process also increases the resistance of the arc plasma as a result of reduced contact pressure and arc contact area.

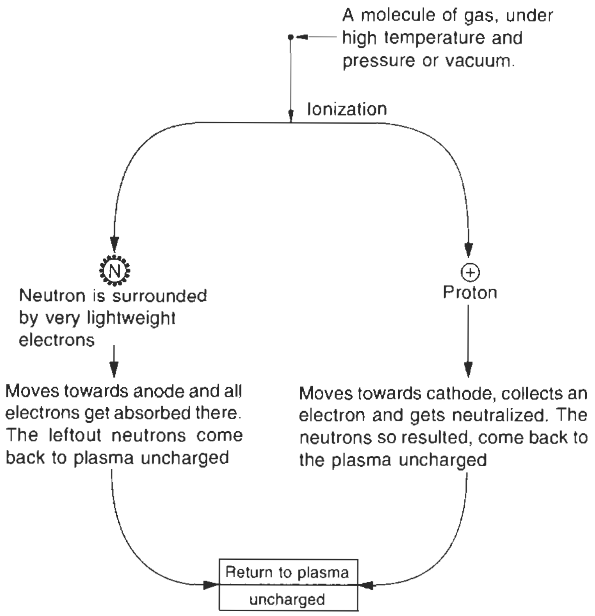

Note: The mass of a nucleon (proton or neutron) is 1835 times heavier than an electron and moves much slower than an electron since, $m_1v_1^2 = m_2v_2^2$ = constant. Where m is the mass and v, the velocity of an electron or a proton. The bulk of the arc is therefore caused by electrons rather than protons.

Figure 19.3 Theory of ionization and deionization of gas atoms to extinguish the arc plasma

A proton, being 1835 times heavier than an electron, moves sluggishly compared to an electron since

$$m_1 v_1^2 = m_2 v_2^2 = \text{constant}$$

where m is the mass of an ion and v its velocity. Then, for the mass of electron as m, the velocity of the proton will be

$$1850 \cdot m \cdot V_p^2 = m \cdot V_e^2$$

If V_p = velocity of the proton and
V_e = velocity of the electron

then $V_p = \dfrac{V_e}{\sqrt{1850}} = \dfrac{V_e}{43}$, which is too slow compared to an electron. The conductance of the arc plasma is thus the result of the movement of electrons, rather than protons, which contribute only a small amount.

19.4 Circuit breaking under unfavourable operating conditions

Long years of experience in the field of circuit breaking with interrupting devices have revealed that under adverse conditions of circuit parameters, interruption may not be smooth. It may result in excessive voltage surges, as a consequence of restriking of the parting contacts. A wrong choice of interrupting device may result in insulation failure of the terminal equipment, such as a power transformer, an induction motor or interconnecting cables. This situation may arise when:

1 Interrupting small magnetizing currents, such as interrupting an induction motor or a transformer on no-load, a situation, when the current may lag the impressed voltage by nearly 90°.
2 Interrupting a charged capacitor bank, when the current will lead the impressed voltage by nearly 90°.
3 Interrupting an unloaded transmission or distribution line or a cable, i.e. interrupting a line charging current, which is capacitive and may lead the system voltage by nearly 90°.
4 Interrupting an induction motor immediately after a switch on, when the current is large and highly inductive.
5 Interrupting fault currents that are mostly inductive (Section 13.4.1) and occur at very low power factors. They are excessive in magnitude, and cause high thermal effects and electromagnetic* forces on the arc chamber, the contacts and the contact mounting supports.

Under the above conditions, the arc, as usual, will extinguish at the first current zero but will have a tendency to re-establish immediately again, after the current zero (Figure 17.11(c)) while the contacts are still parting. This is because the TRV across the parting contacts may exceed the dielectric strength of the contact gap achieved so far.

Restoration of the dielectric strength will depend upon the speed of the moving contact and the insulating medium of the arc chamber. There may be a number of restrikes before a final extinction is achieved. The frequency of restrikes may be extremely high (equation (17.1)), depending upon the *L* and *C* of the interrupting circuit, which would have the characteristics of a surge circuit on formation of an arc. In terms of actual rated frequency (*f*), restoration of the dielectric strength may not take more than one half to two cycles, i.e. 10–40 ms (for a 50 Hz system). The behaviour of circuit breaking thus depends upon the design and the quenching medium of the interrupting device.

19.5 Circuit interruption in different mediums

19.5.1 Bulk Oil Circuit Breakers (BOCBs)

Refer to the general arrangement of this breaker in Figure 19.4. In this device the moving contacts make and break in an oil bath. When the arc is formed during an interruption, the oil becomes decomposed due to excessive heat, and produces a few gases and vapours such as H_2 (70%), C_2H_4 (20%), CH_4 (10%) and free carbon, say, 3 g per 10 litres of oil decomposed at a very high pressure of 100–150 bars, in the shape of a bubble around the arc (Figure 19.5). H_2 is an extremely good medium for quenching and does most of the cooling of the arc plasma, exting-uishing it while passing through it. The gases thus produced also cause turbulence in the oil in the neighbourhood, causing rapid replacement of the oil with cool oil from around the contacts, thus achieving a double cooling effect. At each current zero, it almost recovers its dielectric strength and also increases its post-arc resistance as a result of cooling and arc extinction, making the interruption all the more easier and complete.

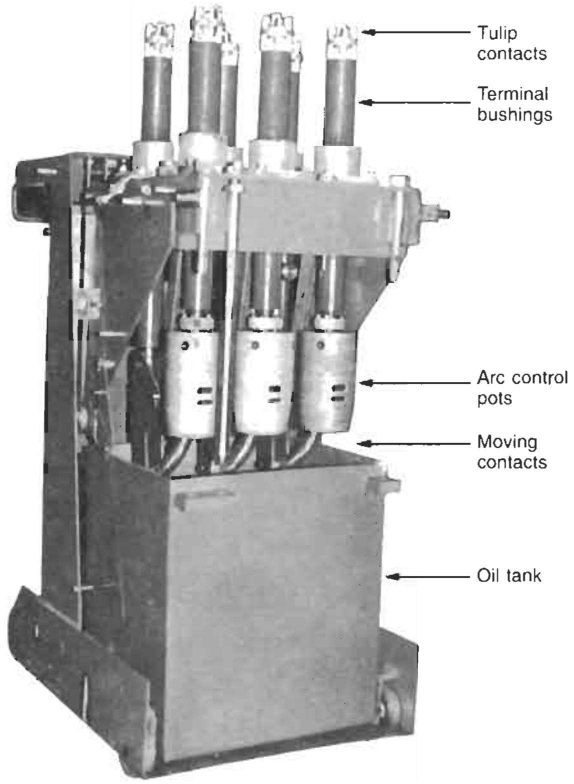

Figure 19.4 Rear view of a bulk oil circuit breaker assembly showing single-break contacts, self aligning cluster isolating contacts, terminal bushing and arc control pots (Courtesy: GEC Alsthom)

Simultaneously the bubble also pushes the oil away from around it and reduces the cooling. Proper design, however, can ensure adequate cooling during interruption (arcing) by adjusting the speed of the parting contact, supplementing the cooling of oil through an additional oil chamber, such as a side-vented explosion pot or cross jet pot, by adjusting the gap between the fixed and the moving contacts.

While breaking smaller currents, the formation of gas may not be adequate to provide the desired cooling effect. This is, however, immaterial because of less intensive arc formation requiring much less cooling. Extinction may be slightly prolonged but may be achieved by the next current zero.

---

* The breaker will interrupt only during a transient state (Figure 13.20) by which time the d.c. component responsible for the dynamic forces, has subsided.

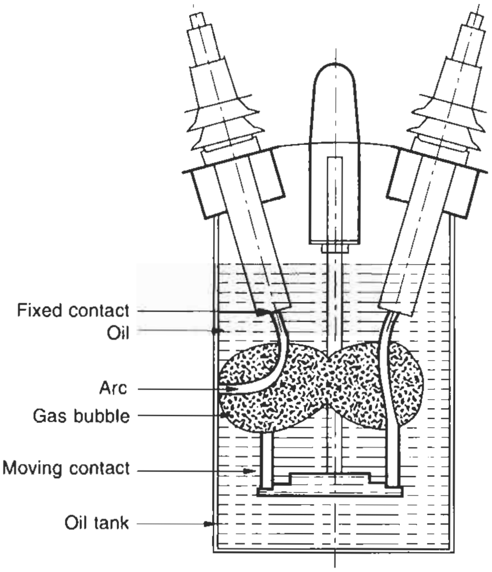

(1) Formation of gas bubble.
(2) When the dimensions of the tank are inadequate, the bubbles may communicate amongst themselves and also with the tank and cause fusion which may lead to explosion.

Figure 19.5 Interruption of circuit in oil

The circuit tends to interrupt at a normal current zero and causes no current chopping. A BOCB is generally designed with two breaks per pole that help in restoring the dielectric strength promptly during an arc interruption.

This is the oldest version of HT circuit breakers and was the most extensively used breaker up to 1970. In modern systems of power distribution, however, application of this breaker is quickly becoming outdated due to the higher maintenance of oil that requires constant checking. It becomes carbonized on every switching and loses its dielectric strength, leading to the possibility of a fire hazard. Poor availability of such breakers for higher fault levels to match the complexity and a much higher fault level (Table 13.10) demand of modern transmission and distribution networks has also rendered them unsuitable for all such applications. It is, however, still in use for many installations that have a lower fault level and voltages of 3.6–12 kV.

Role of oil

- To insulate the live contacts from the grounded metal tank. The dielectric strength of oil is nearly twice that of air.
- To provide an insulating barrier between the open contacts after the arc is extinguished.
- To produce hydrogen during the arcing period.

Shortcomings

1 Oil causes carbonization and sludging.
2 A hydrogen–air mixture is highly explosive and fire hazardous.
3 Oil coalescing (fusion) with the tank walls may cause an ignition and explosion. This limitation requires a large oil tank, which becomes rather impracticable to handle beyond a certain range of voltage and current rating. For instance, for a 200 kV system almost 20000 litres of oil tank per phase will be essential. The arc interruption, although highly efficient and almost automatic as the size of the gas bubble and the gas pressure is directly related to the size of the arc plasma or the current it is interrupting, is highly susceptible to explosion by fusion with the tank metal or high carbonization of oil.
4 The arc energy produced during an interruption is high compared to the mediums of SF_6 and vacuum. Figure 19.6 makes a comparison of the arc energy produced during interruption of a breaker in different mediums.

The improvized version of a BOCB is achieved through an MOCB by arranging separate and insulated arc chambers to interrupt each phase separately, thus eliminating the element of fusion with the tank wall.

19.5.2 Minimum Oil Circuit Breakers (MOCBs or LOCBs)

Refer to the general arrangement of this breaker in Figure 19.7. The theory of arc extinction is the same as for BOCBs. Here also the circuit interrupts at a normal current zero and generally causes no current chopping. In view of their construction which houses each arcing contact in a separate insulated cylindrical body (Figure 19.8) it has space limitations to provide two breaks per pole. As a result, it has a slightly delayed extinction of arc compared to a BOCB.

However, this is an improvized version of the bulk oil circuit breaker. Here, the oil is used only for the purpose of quenching the arc. It became the most sought-after

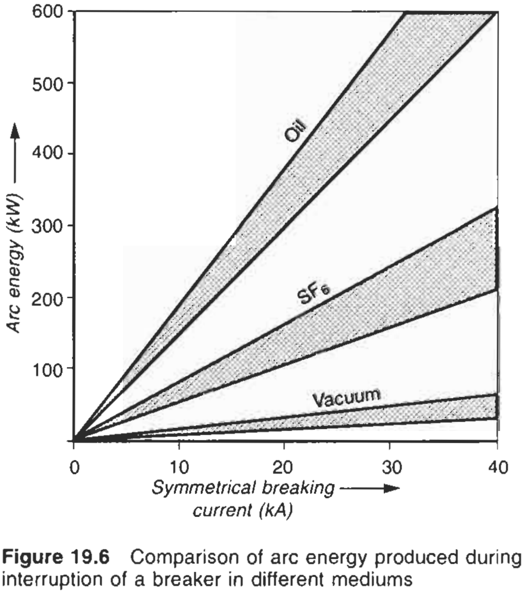

Figure 19.6 Comparison of arc energy produced during interruption of a breaker in different mediums

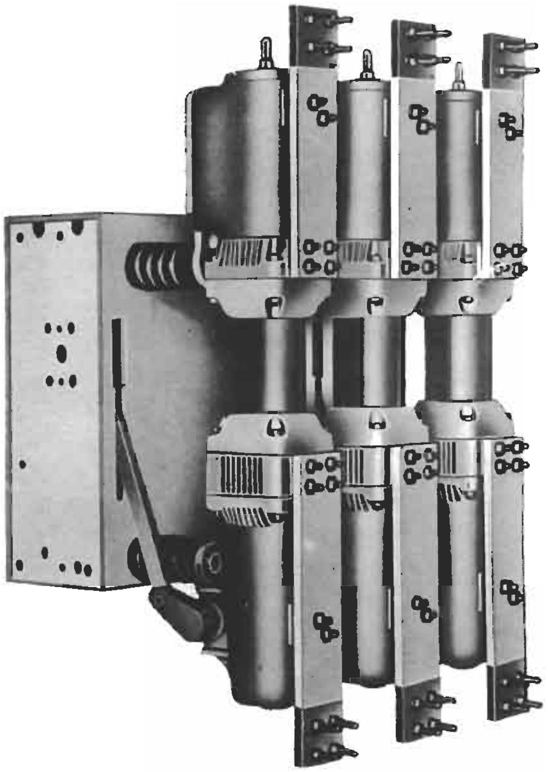

Figure 19.7 Minimum oil content circuit breaker (MOCB) (Courtesy: NGEF Ltd.)

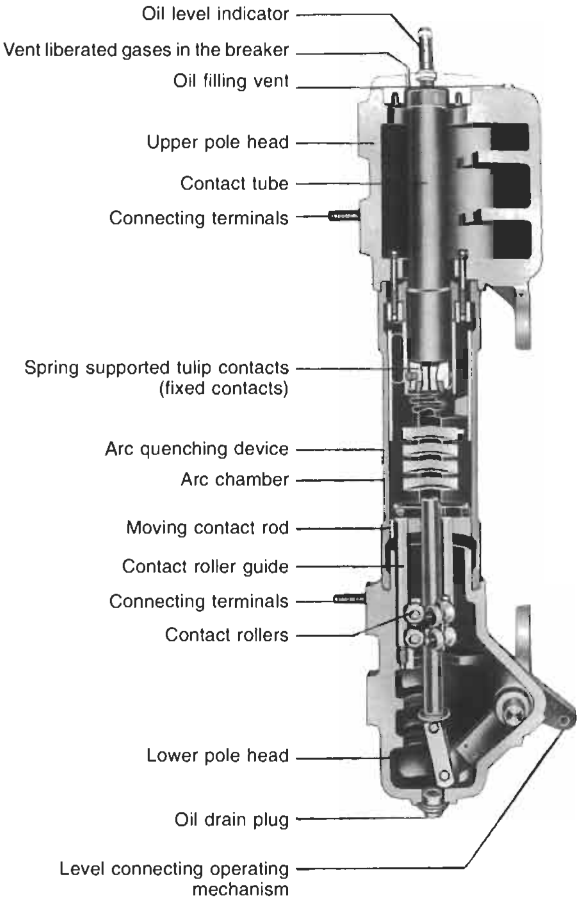

Figure 19.8 Cross-sectional view of a typical pole assembly of an 11 kV MOCB (Courtesy: NGEF Ltd.)

breaker during the late 1960s and onwards. Their rupturing capacity is also much higher than that of a BOCB and they are extremely suitable for distribution systems with moderate fault levels. The trend, however, has tilted in favour of more advanced technologies, now available in the form of vacuum or SF_6 breakers. MOCBs are available from 6 kV to 420 kV and have a rupturing capacity of 250–25 000 MVA.

19.5.3 Air Circuit Breakers (ACBs)

Refer to the general arrangement of this breaker in Figure 19.9(a), and (b).

The moving contacts make and break in air as shown in Figure 19.10. During interruption, the arc is formed (Figure 19.11) producing N_2 (80%) and O_2 (20%) and metallic vapours. The quenching and extinction of arc plasma is achieved through the elongation of arc, which increases the area of cooling, on the one hand and requires a higher TRV to cause a restrike, on the other. To obtain this, arc chutes are provided on the top of the interrupting contacts, as illustrated in Figures 19.12(a) and (b). The design of the arc chutes is such that it drives the arc plasma upwards and elongates it to provide the required cooling effect. This is achieved by constructing the arc chute housing of a non-magnetic material, such as glass, asbestos, ceramic or Bakelite, suitable to withstand the very high temperature of the arc plasma. Metallic arc splitter plates (fins) are fixed inside the arc chute housing so that the arc plasma produces a magnetic field through these splitters and rises upwards, and splits into a number of shorter arcs, to lose all its heat through convection. This renders the TRV insufficient to cause a restrike. The long arc length and subsequent cooling increases the resistance of the arc plasma and improves the p.f. of the interrupting circuit. It thus helps to bring the current phasor closer to the voltage, and make interruption on a current zero less severe as a result of low TRV. (Refer to curves *a* and *b* of Figure 17.11.) The gradual rise of arc resistance after a current zero dampens the TRV and makes such breakers almost immune to switching surges. For higher currents, the arc splitter plates may be altered to have a variety of designs, such as with offset slots, serpentine splitter plates or similar features to effectively arrest the arc plasma within the arc chutes, rendering it incapable of causing a restrike after a current zero.

Such breakers are normally produced for use on an LT system only. At higher voltages, while interrupting heavy currents (such as on a fault) the arc energy may be so high that a disproportionate size of arc chutes may be required to arrest and extinguish the arc, leading to disproportionate size of ACB.

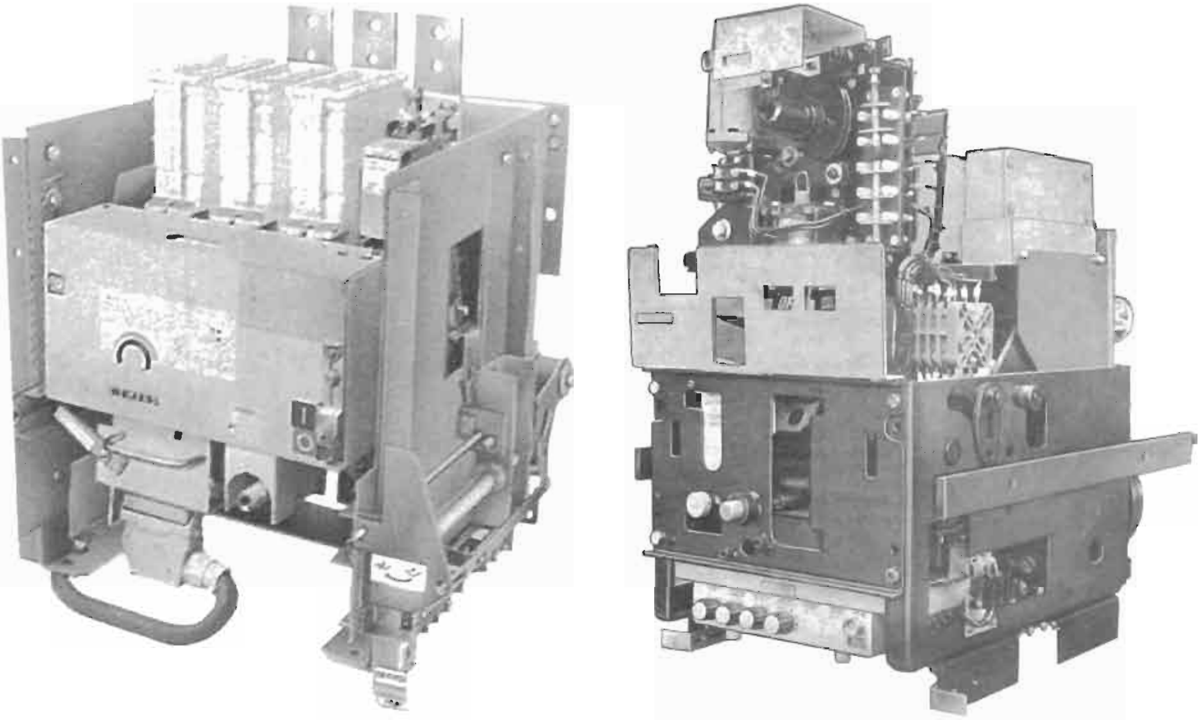

(Courtesy: Siemens) (Courtesy: GE Power Controls)

Figure 19.9(a) Views of air circuit breakers

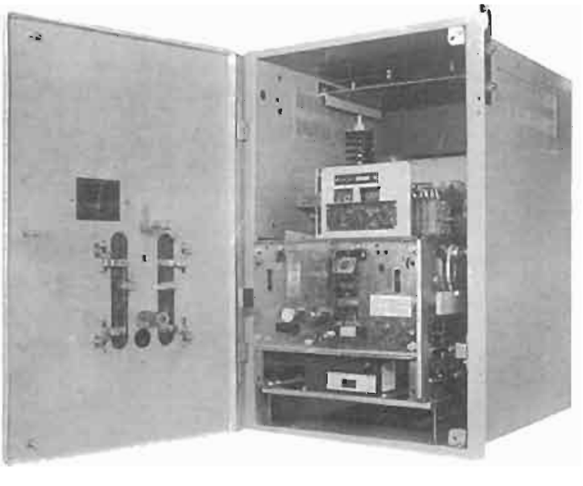

(Courtesy: Alsthom)

Figure 19.9(b) ACB in housing

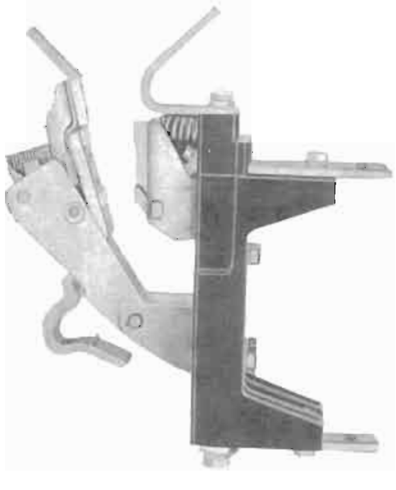

Figure 19.10 Typical contact arrangement of an LT air circuit breaker

ACBs were the first to be produced commercially. They are simple to operate and cause no fire hazards. But at atmospheric pressure, they possess a low dielectric strength and are therefore normally manufactured only in low voltages. Air has less contamination and therefore these breakers require negligible maintenance, compared to oil. They require no contact cleaning. Since there is a limit to producing these breakers for HT systems, their normal application is for LT systems alone, where they are used extensively. In fact, they are the only breakers to meet the needs of an LT distribution system.

19.5.4 Air Blast Circuit Breakers (ABCBs)

Refer to the general arrangement of this breaker in Figure 19.13(a).

These are similar to ACBs, except that the process of interruption is accelerated by impinging a high pressure

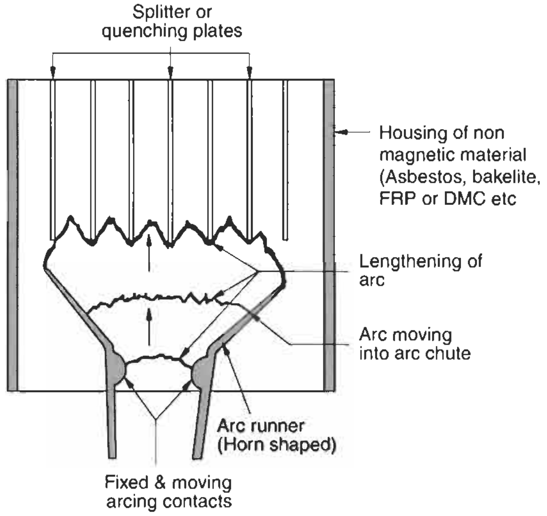

Figure 19.11 Process of arc formation and quenching in an ACB using splitter plates

axial air blast through the arc plasma, when the contacts have just begun to separate. (See Figure 19.13(b).) The compressed air has greater dielectric strength and thermal properties than ordinary air at atmospheric pressure.

The conventional pressure of air blast is generally 218 to 900 lb/in^2 (1.5 to 6.2 MN/m^2) up to 110 kV, up to 3000 lb/in^2 (20.7 MN/m^2 (for voltages up to 400 kV, and still higher pressures for higher voltages. The pressure requirement will change from one manufacturer to another, depending upon contact design, interrupting mechanism and design and value of resistors. Since most quenching is through a predetermined force of an air blast, the force of arc plasma quenching and extinction (deionization) remains the same for a particular size of breaker, irrespective of the amount of current the interrupting device may have to break. This factor inherits a tendency to break small currents, even before their natural current zeros, causing current chopping (Section 19.6). Current chopping may raise the TRV up to 2.5–3 p.u. However, it is possible to design these breakers to contain the value of a TRV to a non-striking level.

The dampening of a TRV is achieved through low- and high-resistance units provided across the contacts. The low unit will short at higher TRVs and the higher unit at lower TRVs. The arc interruption is fast and generally at the first current zero due to dampening. When the breaker is in the closed position, the resistors are open circuited. As soon as the main contacts begin to interrupt, the contacts of resistor make first, before the main contacts separate and provide the required dampening. After extinction of the arc, the resistor circuit opens again automatically and restores to the original position.

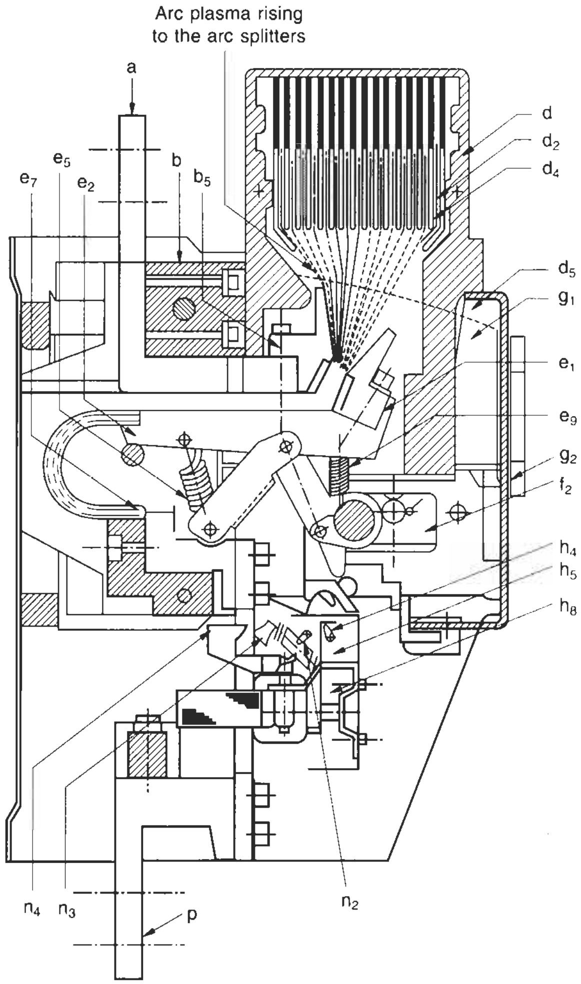

a	Top terminal
b	Moulded–plastic base
b$_5$	Fixed contact
d	Arc chute
d$_2$	Arc runner
d$_4$	Arc splitters
d$_5$	Leaf spring
e$_1$	Moving contact
e$_2$	Contact carrier
e$_5$	Tension spring
e$_7$	Flexible connector
e$_9$	Compression spring
f$_2$	Operating shaft
g$_1$	Insulating barrier
g$_2$	Insulating barrier
h$_4$	Bimetal strip
h$_5$	Intermediate shaft
h$_8$	Current transformer
n$_3$	Intermediate shaft
n$_4$	Magnet core
p	Bottom terminal

Figure 19.12(a) Operating mechanism of an LT ACB showing the arc chute with splitter plates (Courtesy: Siemens)

Until a few years ago these breakers had been quite common for medium voltages, up to 33 kV. Since they require a powerful blast of air at high pressure and velocity into the arcing region, they require a reliable source of air supply. Air should be clean and dry and at the correct pressure and volume at all times. This requires an elaborate arrangement for air compression, an air storage facility, a network of feed pipes, valves and safety devices besides their regular maintenance and upkeep. All this is costly particularly when only a few breakers are at a particular installation.

Moreover, compressed air is released through an orifice at the exhaust point at a high velocity and causes a sound like thunder. This may be frightening to people in the vicinity. Sub-stations involving a number of such breakers are a nuisance to residents nearby. The larger the breaker

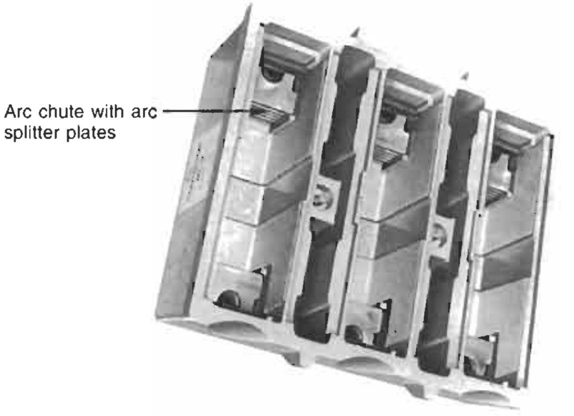

Figure 19.12(b) Arc chamber with splitter plates in a power contactor

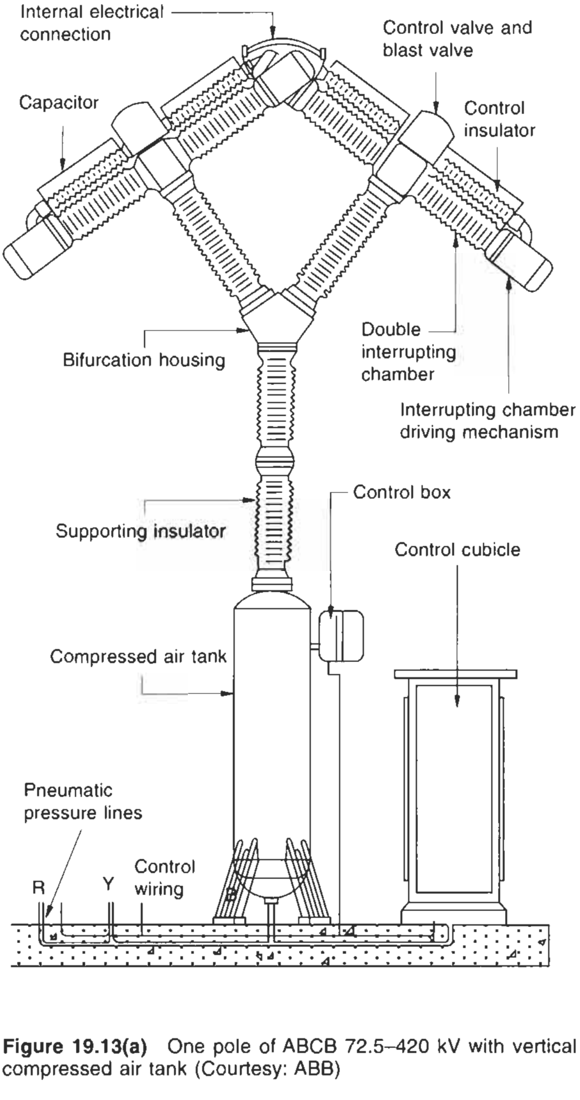

Figure 19.13(a) One pole of ABCB 72.5–420 kV with vertical compressed air tank (Courtesy: ABB)

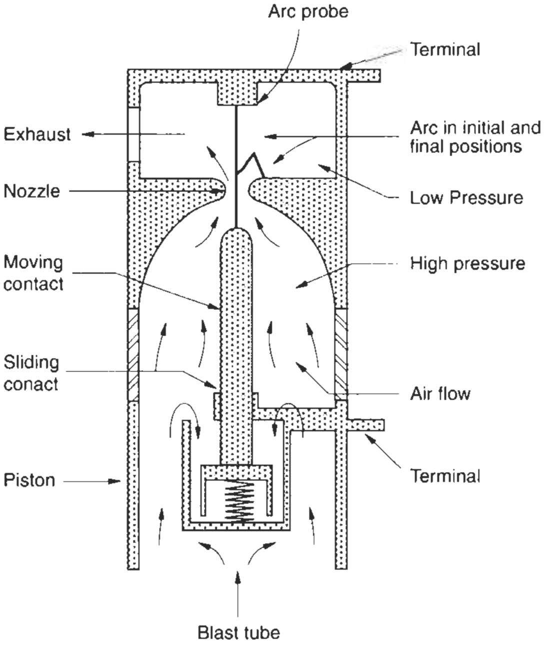

Figure 19.13(b) Process of arc formation and quenching in an air blast circuit breaker

and the higher the kV of the system, the greater the pressure of the air blast and its sound. Silencers, however, are provided to contain such sound hazards but they are more appropriate for large installations which require a large number to be installed in the same system to economize on the compressed air supply arrangement.

19.5.5 Sulphur hexafluoride gas circuit breakers (SF_6)

Refer to general arrangements of such breakers in different ratings as shown in Figures 19.14–19.16.

This is the latest technology in the field of arc extinction. It was introduced in the 1960s and attempts to achieve a high dielectric strength between the contacts. At room temperature SF_6 is a chemically inert, non-toxic and non-inflammable, colourless, odourless gas, having a molecular weight of 146 and provides excellent arc quenching as a result of electronegative behaviour.

At atmospheric pressure, its dielectric strength is two to three times that of air, as illustrated in Figure 19.1, and its arc-quenching ability many times more than air. This gas undergoes no chemical change at high temperatures, except small decomposition into SF_2 and SF_4 gases and some metallic fluorine in the form of an insulating powder while interrupting and quenching an arc. These gases and powder, however, are readily absorbed by activated alumina placed in the filters in the closed-loop circuit of the gas, as discussed later. The gas cycle is such that after every interruption the consumed gas is replenished through a reservoir filled with SF_6 gas at a high pressure, say, sixteen times that of the atmosphere and connected to the main interrupting chamber through

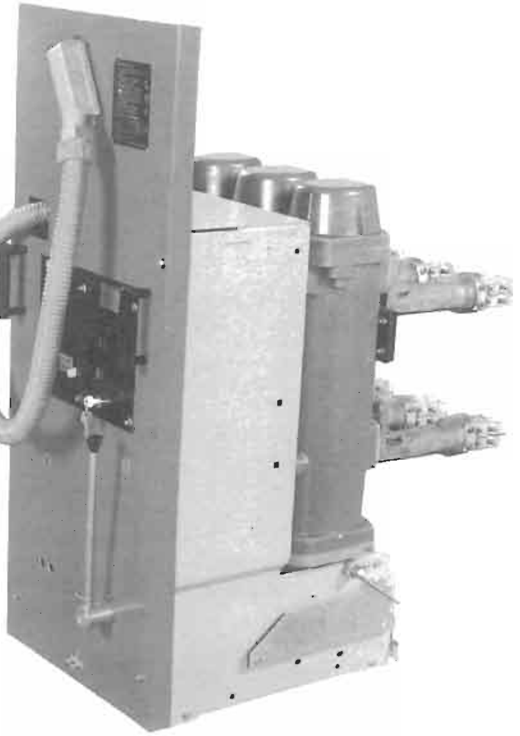

Figure 19.14 11 kV SF_6 circuit breaker (Courtesy: Voltas)

pressure valves and filters. As soon as the pressure in the interrupting chamber falls below a pre-set value, the valve in the reservoir opens and builds up the lost pressure. Due to the very high pressure in the reservoir, compared to only almost three times the atmosphere in the chamber, it is possible that the pressure inside the interrupting chamber may sometimes exceed the required value. In the interrupting chamber, therefore, are also provided high-pressure release valves to pump the excess gas back to the reservoir through a compressor and a filter. The total gas circuit is a closed cycle without any venting to the atmosphere.

This gas is electronegative and its molecules quickly absorb the free electrons in the arc path between the contacts to form negatively charged ions. This apparent trapping of the electrons results in a rapid build-up of dielectric strength after a current zero. The detailed sequence of arc extinction may be summarized as follows.

The contacts begin to compress a quantity of SF_6 gas as soon as they start opening. This opening also causes arc plasma between the contacts. The temperature of the arc plasma ionizes the gas into sulphur and fluorine atoms and quickly becomes quenched through the turbulence of the compressed gas through a very strange process of negative ion formation. At higher temperatures, the S atoms become ionized into S^+ protons and S^N neutrons. The S^e electrons of the neutrons are immediately absorbed by the fluorine atoms to form fluorine ions (F^-) which are heavy and are sluggish. They contribute little to maintaining

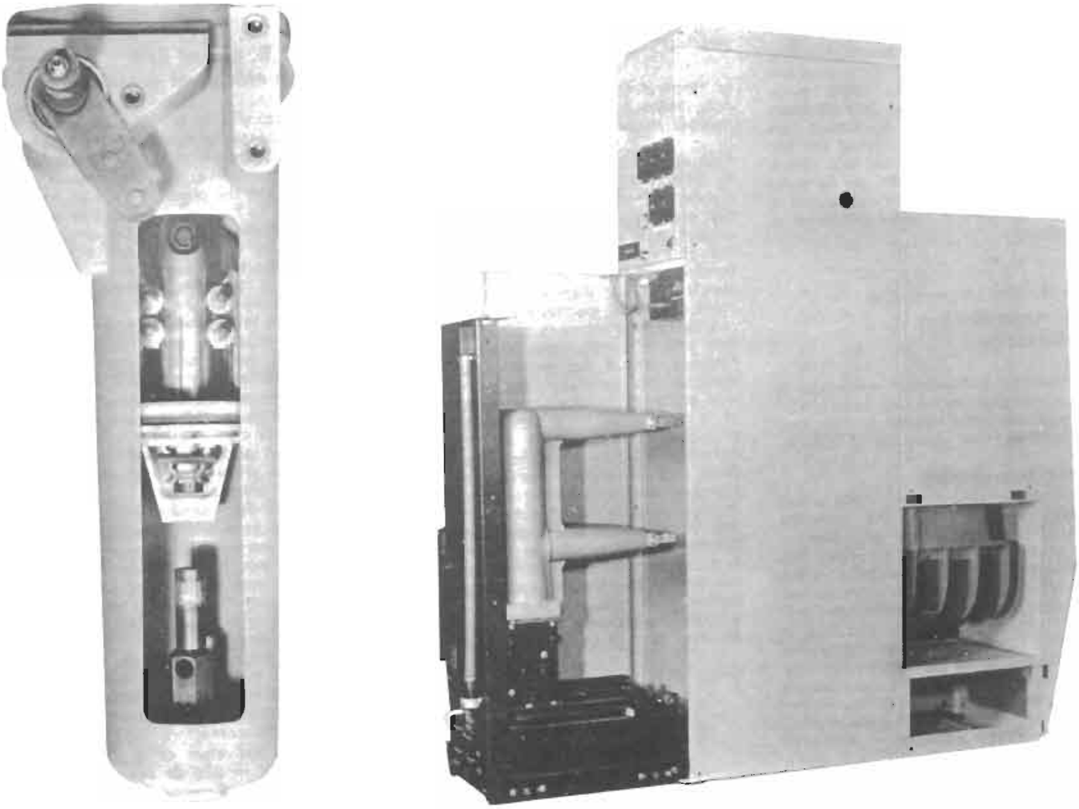

(a) Exploded view of a pole

(b) Breaker in a draw-out position

Figure 19.15 General arrangement of a 3–12 kV, SF_6 circuit breaker in a housing (Courtesy: Voltas)

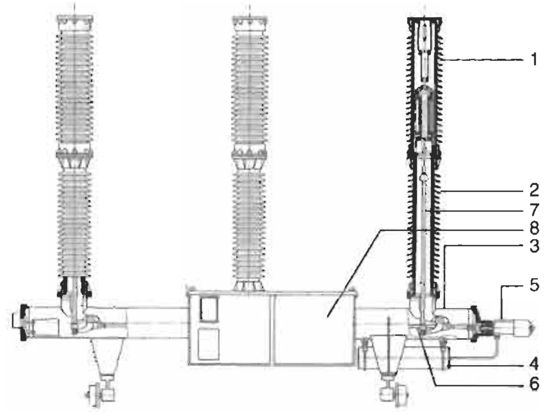

1. Interrupter unit
2. Multi-shed insulator
3. Base tube
4. Hydraulic storage cylinder
5. Operating mechanism
6. Coupler
7. Operating rod
8. Control unit

(a)

Figure 19.16(a) An SF_6 circuit breaker 123–145 kV, 31.5 kA. It can also be pneumatic or spring operated, depending upon the arc quenching technique adopted and energy required to extinguish the arc (Courtesy: BHEL)

the conductivity of the arc plasma. (See also Section 19.3.) This quickly immunizes the free electrons, restores its dielectric strength, quickly quenches the arc plasma, extinguishes the arc and builds up the dielectric strength after a current zero. After a current zero, the process quickly, quenches the arc in the beginning itself by sweeping away the arc plasma, thus improving the dielectric strength between the parting contacts and achieving successful extinction of the arc. The arc extinction process may be slightly delayed when the contacts open very close to the next current zero, and the quenching medium blows it out with force, before the current zero, leading to a case of current chopping. But with continuous improvement in the techniques of arc extinction, it has been possible to achieve an interruption devoid of a current chopping or a restrike of the arc plasma.

As noted above, to quench the arc plasma successfully it is essential to create a turbulence in the SF_6 gas around the arc plasma to destabilize and blow it out. This can be achieved in two ways:

1 Puffer technique (a puffer identifies the exhaling of gas forcibly by compression)
2 Rotating arc technique
3 Arc blast and arc assistance technique.

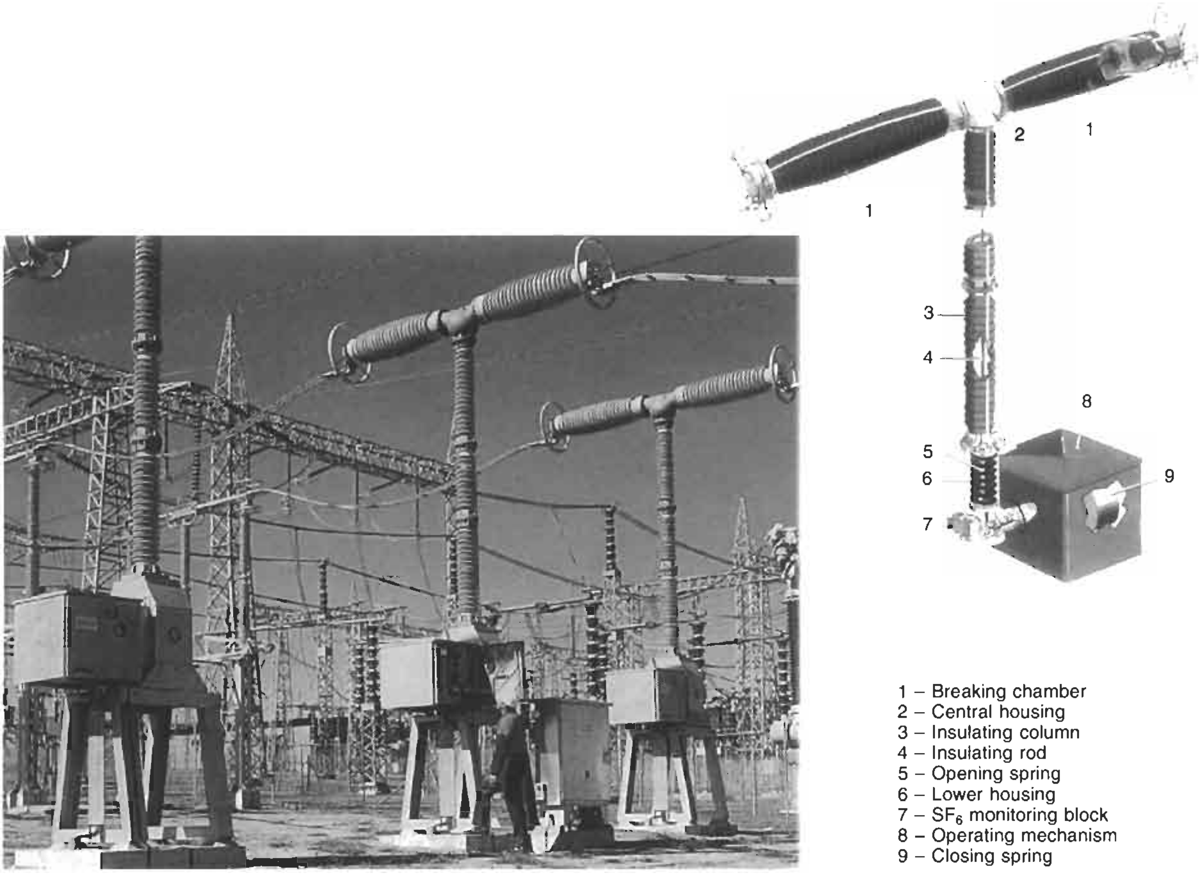

1 – Breaking chamber
2 – Central housing
3 – Insulating column
4 – Insulating rod
5 – Opening spring
6 – Lower housing
7 – SF_6 monitoring block
8 – Operating mechanism
9 – Closing spring

Figure 19.16(b) SF_6 circuit breakers 300–500 kV (Courtesy: Alstom)

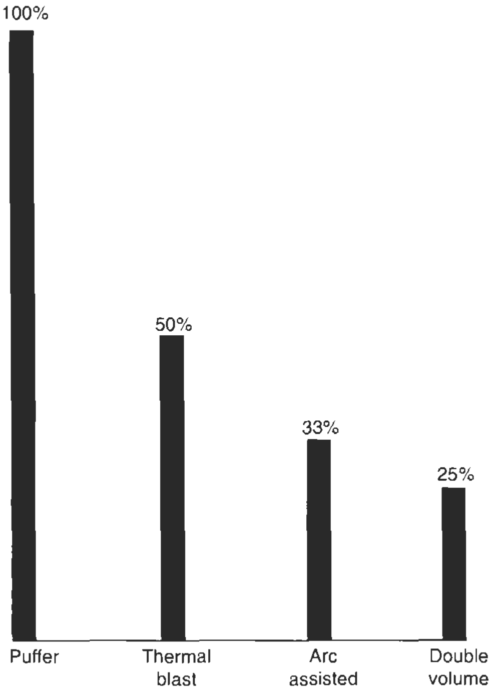

Figure 19.16(c) Comparison of energy requirement for arc extinction in an SF_6 breaker, using different techniques (Courtesy: Alstom)

Puffer technique

Destabilization of the arc plasma is achieved by forced convection of gas created by the movement of the main and arcing contacts through a puffer piston. This is an integral part of the moving main and arcing contacts (both being concentric). In the light of more advanced techniques of arc extinction now available, the manufacture of such breaker is now limited to about 145 kV.

Sequence of arc quenching

Refer to Figure 19.17. On a trip signal the main moving contacts start separating a little ahead of the moving arcing contact and compress gas through the puffer piston inside the tubular chamber. On separation the main fixed and moving contacts are transferred to the fixed and the moving arcing contacts as shown. As soon as the moving arcing contact starts separating, an arc is formed between the fixed and the moving arcing contacts and the already moderately compressed gas is compressed further. This compressed gas is impinged with full force through the blast nozzle (Figure 19.18) at right angles to the arc plasma from all sides to achieve instant destabilization of the arc.

Through radiation also, the arc plasma dissipates a part of its heat which supplements the quenching. But this is too meagre a contribution, as heat dissipation occurs only through the outer surface of the arc plasma. Nevertheless, it is the major cause of gas impediment giving rise to the phenomenon of clogging, discussed later, and which helps in arc extinction.

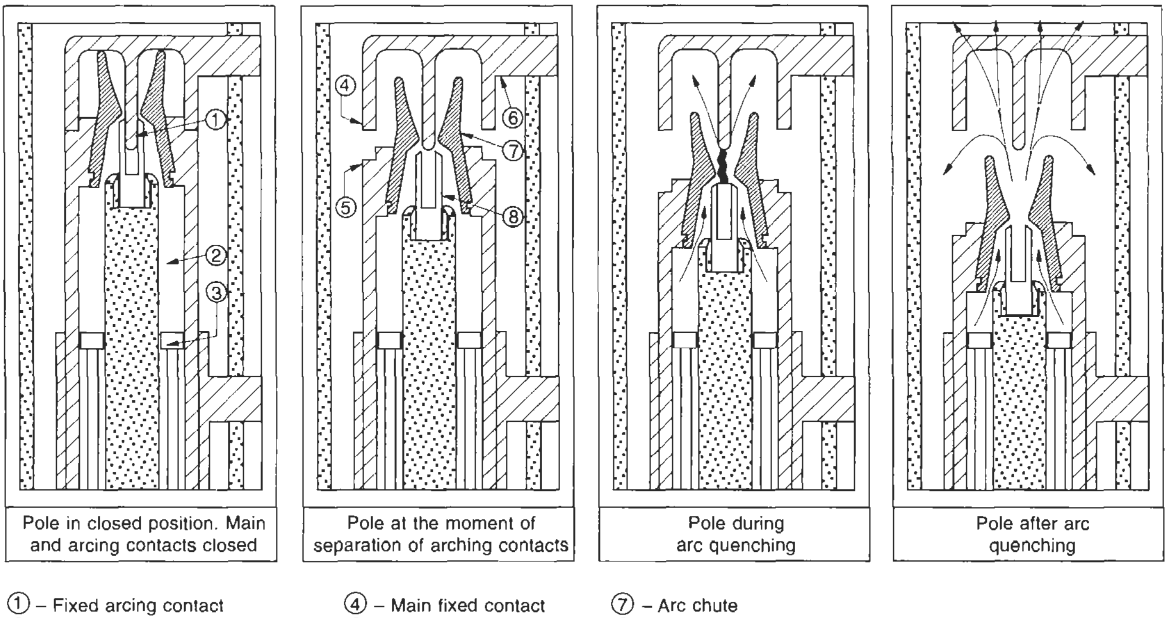

Figure 19.17 Sequence of arc extinction through the puffer technique in an SF_6 breaker through the cross-section of a pole (Courtesy: NGEF Ltd.)

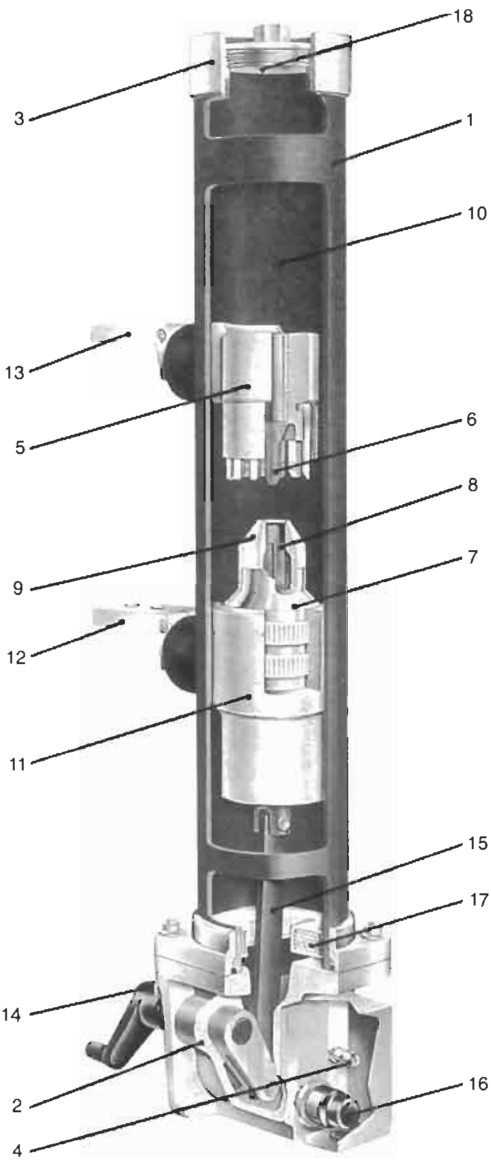

1. Fibre glass arc chamber tube
2. Lower pole head
3. Cap
4. Gas filling valve
5. Main fixed contact
6. Fixed arcing contact
7. Moving contact arrangement
8. Moving arcing contact
9. Blast nozzle
10. Expansion chamber
11. Lower contact
12. Lower terminal
13. Top terminal
14. Spline shaft lever
15. Switching lever
16. Two level pressure switch
    - –1st level contact for alarm
    - –2nd level contact for trip and lockout
17. Enclosure for alumina
18. Explosion proof safety valve

Figure 19.18 Cross-sectional view of a pole of a 12–36 kV SF_6 breaker (Courtesy: NGEF Ltd.)

The events are so fine-tuned and the size of chamber, pressure of gas, travel, distance of the moving contact and the size of blast nozzle so designed and adjusted that a near-strike-free interruption can be achieved for low reactive currents (inductive or capacitive) as well as full-load and very heavy fault currents. The advance compression of gas through the movement of main contact plays an important role by storing a part of the gas even before opening of the arcing contacts.

At high instantaneous currents the arc may occupy most of the contact area between the arcing contacts and may impede the flow of gas through the arc plasma. This phenomenon is termed the clogging effect, but it assists arc extinction in the following manner.

The gas around the arc plasma takes away a part of its heat by radiation. At high temperatures, the gas loses its specific gravity, becomes light weight and diminishes in momentum ($\propto mv^2$). As a result, the gas is rendered incapable of penetrating through the arc plasma to quench it. The flow of gas through the thick of the arc plasma is thus impeded.

As the moving contact moves away, so the arc plasma elongates, losing its initial intensity, and as it approaches the current zero, it loses the most of it. The gas, on the other hand, cools and regains its lost mass, while its pressure in the chamber continues to build to its optimum level, making it more capable of extinguishing a less severe arc plasma. The interrupter can thus be adjusted to blow out the arc at the first current zero, while clearing heavy to very heavy fault currents.

Similarly, at lower currents, the volume of arc plasma is too small ($\propto I^2$) and so is the clogging effect. The pressure and volume of the quenching gas can be adjusted to interrupt the current now also at current zero. All these adjustments are pre-set and sealed by the manu-facturer.

Since the arc extinction technique is highly effective and quick and occurs when the arcing contact is still moving, arc length and hence contact travel, can be reduced as can the arc energy and the excessive heating as well as erosion of the arcing contacts. An extended contact life can thus be achieved by this technique.

In lower voltage ratings, as noted above, the puffer technique is quite prevalent and is adopted by all leading manufacturers. For constructional details and more information on this mechanism, refer to the manufacturers' catalogues. Figure 19.18 illustrates a typical pole assembly of a 12 kV, SF_6 circuit breaker.

Rotating arc technology

The process of arc quenching can be enhanced by increasing the turbulence by ionizing more gas atoms, to increase the gas pressure and therefore turbulence. This is possible by bringing more gas into contact with the arc plasma, and this can be achieved by rotating the arc plasma between the contacts and displacing the arc by a magnetic blow-out. A general method of achieving this is by providing an electromagnetic field around the fixed contact, which gives the required rotating motion to the arc plasma, when the moving contact moves away from the fixed contact, as illustrated in Figure 19.19, similar to a motoring action. Figure 19.20 illustrates one pole of

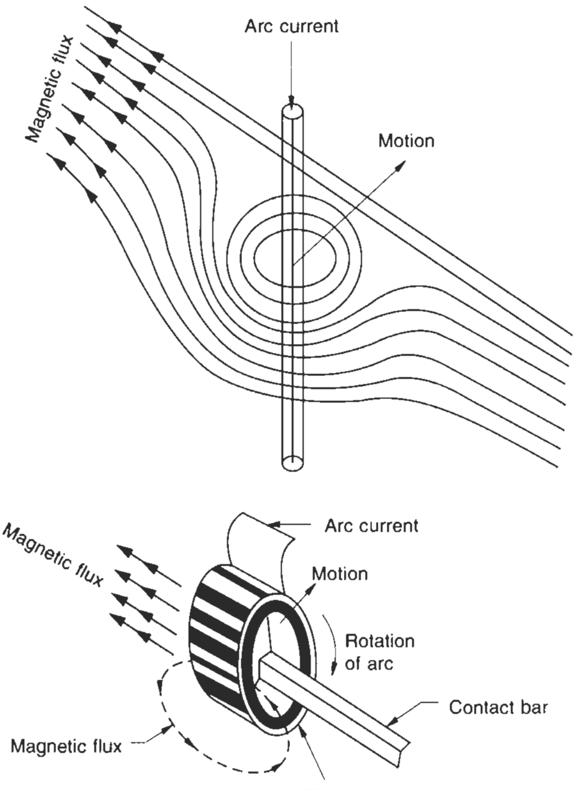

(Replica of left-hand rule, Figure 1.1)

Figure 19.19 Making the arc rotate in a magnetic field

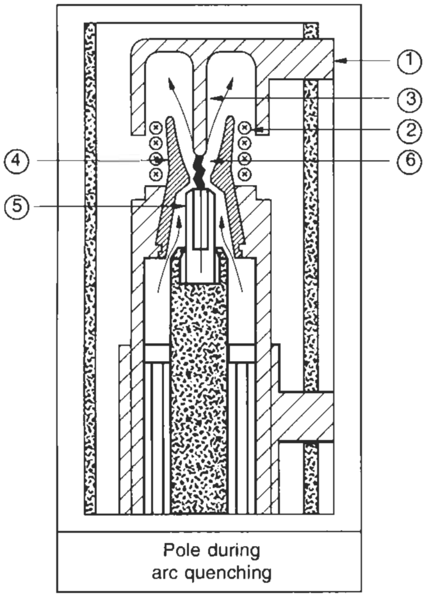

① Fixed contact assembly ④ Arc chute
② Magnetic field coil ⑤ Moving arcing contact
③ Fixed arcing contact ⑥ Arc

Figure 19.20 Typical design of one pole of a rotating arc SF_6 circuit breaker

such a breaker, provided with a magnetic coil. The breakers based on this principle are known as rotating arc circuit breakers. Figure 19.21 illustrates the rotating arc formation and the direction of a magnetic field during an interruption. As the arc is made rotating over the arcing contacts, the heating and thus the erosion of the contacts is low in these breakers, and they have an extended contact life.

This technique, although good, is cumbersome and is therefore generally not practised now by the manufacturers. Instead, some have improvized the puffer technique itself to assist and smooth the arc-quenching process. This they have achieved by optimizing the use of arcing heat through the thermal blast and arc assistance technique.

Thermal blast and arc assistance technique

The design of the arc chamber is improvized to augment the arc-quenching capability of the arcing chamber, by further compressing the gas that had already expanded during arcing and impinging this on the arc with a greater

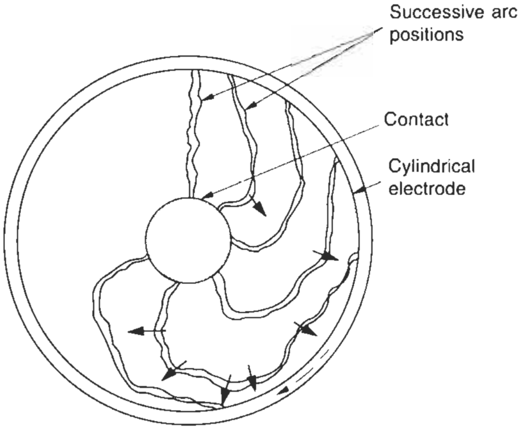

The arrows indicate the direction of magnetic forces

Magnetic forces on the spiral arc

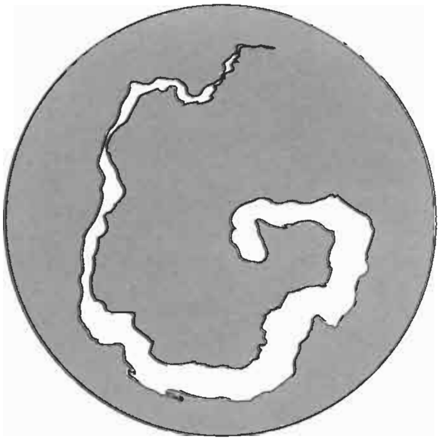

Figure 19.21 The spiral arc in a rotating arc SF_6 circuit breaker (Courtesy: South Wales Switchgear Ltd.)

blast. The blast also helps the main moving contacts to move farther away and thus reduce the energy requirement by the moving mechanism to interrupt the breaker. This makes the whole process of arc extinction easy and smooth. This technique, instead of equalizing the arc heat, reduces the arc energy itself, facilitating a quicker and smoother extinction of the arc. The moving mechanism that in a normal puffer is usually hydraulically or pneumatically operated (Figure 19.16(a)) due to the higher energy requirement by the moving mechanism can now be achieved through a simple spring mechanism (Figure 19.16(b)).

Figure 19.16(c) illustrates a comparison of energy requirements between the various techniques in practice. Future technology on which some manufacturers are already working may be in the form of a double volume technique. In which an attempt is being made to make the fixed main and arcing contacts also moving. This would enhance gas compression as well as the separation of the arcing (interrupting) contacts, and further reduce the arc energy requirement, making arc extinction easier, smoother and quicker. The approximate improvised energy require-ment is shown in Figure 19.16(c).

As SF_6 breakers can be designed to provide a very smooth interruption of an arc, devoid of current chopping or a restrike of the arc plasma by accurately controlling the supply of gas to the required level of cooling, they may also be termed soft break interrupters. SF_6 breakers are the most extensively used and are suitable for practically all applications and voltage systems up to 765 kV and more. The other advantage with SF_6 switchgear is a space saving of up to 70–90% over the conventional type of switchgears. Since these breakers are totally enclosed and sealed from the atmosphere, they are also the most recommended choice for all installations that are hazardous and prone to explosions.

Pre-insertion resistor

These breakers, when used for switching long transmission lines at 420 kV and above, are provided with a pre-insertion resistor across each interrupting contact to limit overvoltages that may occur during a closing or opening sequence, as a result of heavy charging currents as noted in Table 24.2. The value of the resistor may be around 400 Ω for the line parameters, considered in Table 24.2 and may vary with line parameters. The resistors are connected so that during a closing sequence they short-circuit the making contacts before closing the main contacts for, say, 8–10 milliseconds, and open immediately after the contacts are made. This also happens during an opening sequence.

Advantages of SF_6

1 Low gas velocity and pressure minimizes the tendency towards current chopping.
2 A closed recycling of gas causes no noise or contamination of the atmosphere.
3 There is no carbonization and therefore no tracking, (conduction of the insulating medium).
4 Because of the extremely good dielectric properties of SF_6 gas, the arc gap and the contact travel and hence the arcing time are low, requiring less energy to interrupt (Figure 19.6).
5 As the arcing time is very low, it causes no or only a small amount of contact erosion.
6 It is highly suitable for hazardous locations.

19.5.6 Vacuum circuit breakers (VCBs)

Refer to the general arrangement of a loose breaker shown in Figure 19.22 and its housing (Figure 19.23).

The electrical breaking capacity in vacuum has been long known. But it was not until 1970 that it was used in the making and breaking of currents at high voltages. It has been a widely recognized and accepted breaker, leaving behind all other techniques of arc breaking and extinction in its voltage range. In vacuum, a 10 mm gap at about $1/10^6$ mm vacuum of mercury is capable of withstanding a peak voltage up to around 240 kV (Figure 19.1). These breakers require no maintenance and are very compact.

Unlike other mediums, the dielectric strength of a vacuum increases with a gap, but only marginally, which is the limiting factor in producing such breakers beyond 36 kV. These breakers are therefore used only for medium-voltage systems (2.4–36 kV). Some manufacturers have attempted to produce them up to 66 kV but they have not shown the desired results so far. The application of these breakers therefore continues to be up to 36 kV only.

A comparison of dielectric strength of high vacuum with the other available mediums is shown in Figure 19.1. The very high dielectric strength of vacuum makes it possible to quench an arc with a very small contact gap and breakers with very compact dimensions can be designed.

Because of the low contact gap, low arc resistance and fast clearance, the arc energy dissipated in vacuum for a particular current is 1/10 that of oil and 1/4 that of SF_6, and is illustrated in Figure 19.6.

Vacuum is finally judged to be the best medium to quench the arc plasma and interrupt a circuit under the most adverse conditions. Figure 19.24 gives cross-sectional views of one pole of a vacuum circuit breaker and a typical construction of the arcing contacts and Figure 19.25 shows its assembly.

Advantages

Some advantages of vacuum circuit breakers are summarized below:

1 They have a longer life span, during which they do not deteriorate or lose their dielectric properties.
2 They require extremely low maintenance.
3 At lower currents, say, up to 1 kA, the maximum duration of arc even at low p.f.s. is of the order of just one-half to one cycle of the natural frequency of the system, as against nearly two cycles for an MOCB. The low exciting currents, at low p.f.s. are more difficult to interrupt rather than large currents at high p.f.s. due to an extremely adverse voltage–current phasor disposition. For more clarity refer to Section 17.6.2. The current now is nearly 90° lagging the applied voltage and the TRV approaches a full applied

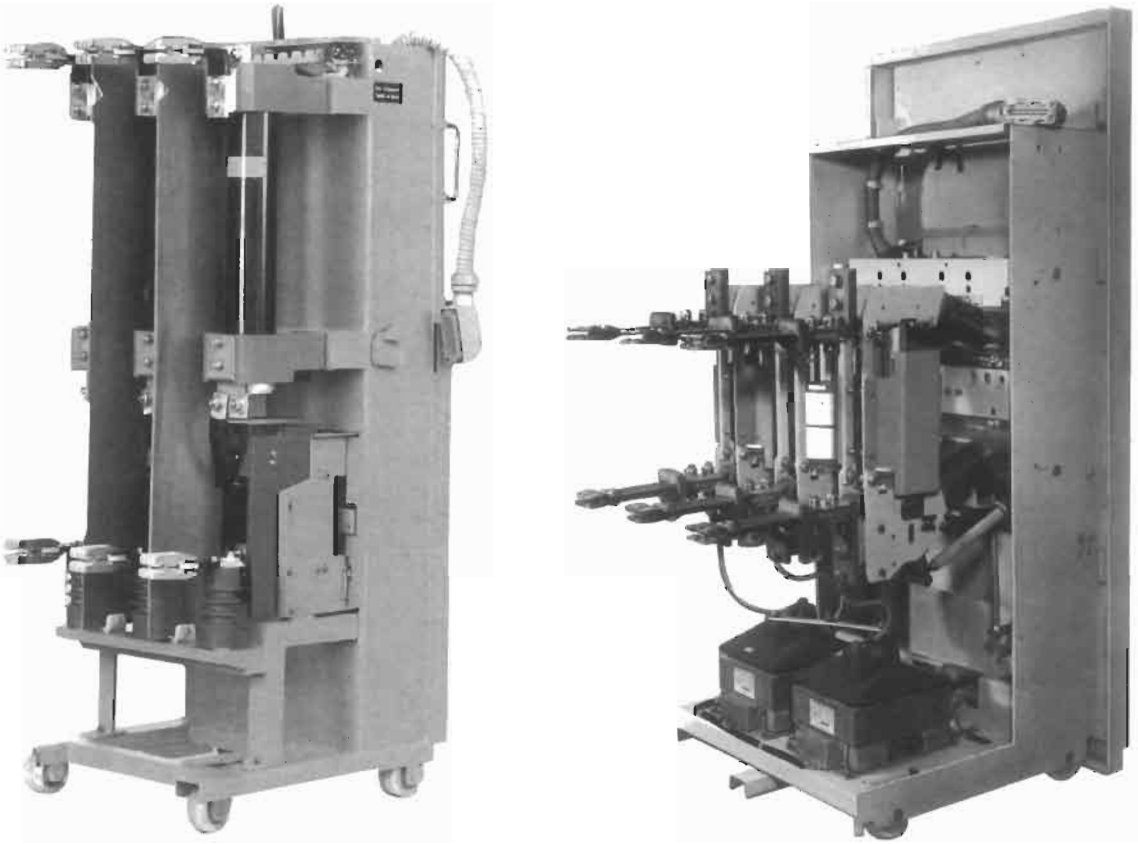

11 kV vacuum contactor with HRC fuses (Courtesy: Joyti Ltd.)

7.2–36 kV vacuum circuit breaker (Courtesy: Siemens)

Figure 19.22

voltage and hence a tendency to cause a restrike. A VCB is devoid of a restrike after a current zero, as explained later.

4 Thus they have an extremely low energy requirement to actuate the operating mechanism and an equally short breaking time.
5 They cause no fire hazard.
6 They make no noise.
7 They do not emit any gases.
8 They are the only devices that are independent of the operating system, as the breaking capacity is dependent mainly on the material and contour of the contact structure and the quality of the vacuum.

Disadvantages

Vacuum breakers have a few disadvantages as noted below:

1 They may inherit current chopping tendencies at very low currents of 3–5 A, varying from one manufacturer to another and depending upon the contact material used. This is due to their extremely fast operation as a result of a high vacuum pressure of the order of 10^{-6} Torr (1.333×10^{-4} N/m^2) or more (one Torr being the pressure equivalent to hold a column of mercury 1 mm high). Thus they cause a high TRV, particularly when interrupting a highly inductive or capacitive circuit (Figure 17.11(d)).
2 Very high vacuum may have a tendency to cold welding of the making contacts. Two pure metals, when joined have a tendency to stick together under high vacuum. This phenomenon is termed cold welding. The contacts on closing may require a lot of force to separate them which may prove to be detrimental in clearing a fault promptly.
3 At no load, opening of contacts may lead to roughening of the surface, due to the breaking of the cold welding that takes place.
4 They also have a tendency to melting and welding of the contacts while making or carrying large currents. However, this is overcome by suitably designing and contouring the contacts so that the arc impinges over a large area of contacts rather than at one point only to prevent melting of contacts. The material of the contact is chosen so that it will produce less gas content, have good anti-weld properties and low current chopping tendencies (high contact resistance). The normal metal alloys in use are:
   - Low resistance–high kA alloy (high melting point): copper–bismuth has a good resistance to cold

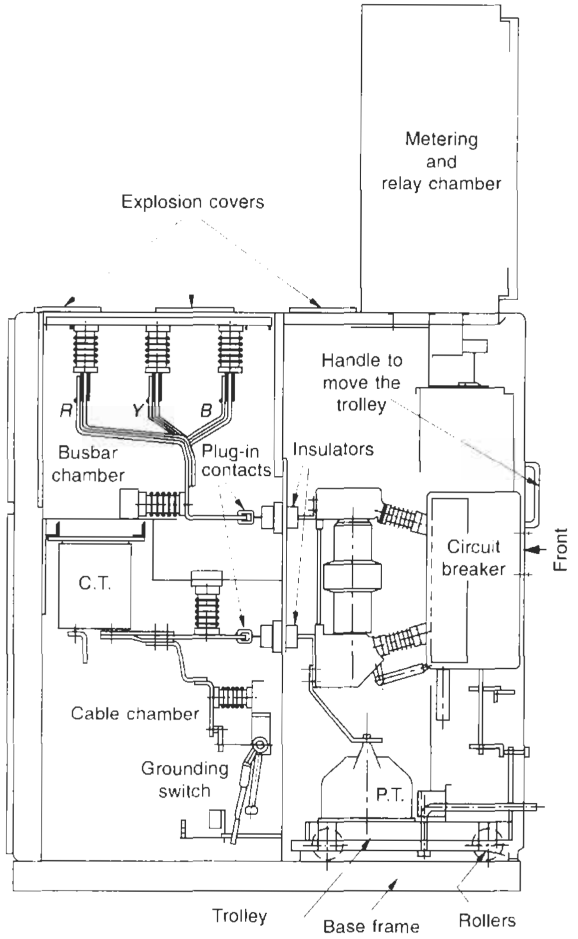

Figure 19.23 General arrangement of a 7.2–36 kV vacuum circuit breaker in a housing (Courtesy: Siemens)

welding but has a higher probability of current chopping. Refer to curve 4 of Figure 17.8.

- High resistance–low kA alloy (low melting point): copper–chromium (CLR) which also has a good resistance to cold welding and a lower probability of current chopping, similar to in OCBs. Refer to curve 2 of Figure 17.8.

5 Since a very small gap in vacuum can withstand a very high voltage, a larger gap than required will not increase its dielectric strength. This is the limiting factor for a VCB to exceed a certain voltage system, presently 36 kV.

6 They may cause contamination of the vacuum due to gas produced by arcing.

7 They may lead to deterioration of the insulation of the insulating container due to condensing of the metal vapour on the inner surface of the container (more in transverse magnetic field type breakers).

The theory of arc extinction, as related to vacuum, is typical. No arc can take place in the absence of a gas. The molecules of the gas alone under heat and pressure will cause to ionization, responsible for the arc plasma and subsequent deionization, which extinguishes it. In vacuum, the content of gas is missing. In fact it should have been an ideal condition to interrupt a circuit without the formation of an arc and thus make the interruption devoid of high TRVs and the phenomenon of arc restrikes. But it is not so, as the heat generated at the parting contacts causes boiling of the contact material (generally alloy of copper as mentioned above). This boiling produces metal vapour, usually of copper atoms (copper, of all the other alloy metals, has the lowest melting point). Most of the metalized vapour is thus formed of copper atoms only. An electric field within the contacts quickly generates free electrons of this metal vapour and a constricted localized plasma is established. Beyond a certain current value, the behaviour of the arc is suddenly modified and the constricted form of the arc plasma transforms to a diffused form. The cathode spot becomes divided into several very small spots, which then move very rapidly, repelling each other continually. This phenomenon is used in current breaking in vacuum. In other mediums and conventional interrupters, the current maintains only a single arc column. These spots have an extremely high current density which can reach millions of amperes per square centimetre. The result is that very high density streams of electrons are emitted without a commensurate quantity of metal vapour. As the current falls to zero, at the next current zero the metal vapour solidifies, leaving behind no medium to hold the arc and the electrons cease to cross the contact gap. The dielectric strength reaches its maximum. The anode, being cool is no longer able to emit more electrons, hence it is not able to restrike after a current zero. Arc extinction in such a medium is therefore extremely quick. The arc plasma depends largely upon the alloy being used as the contact material. It is of vital

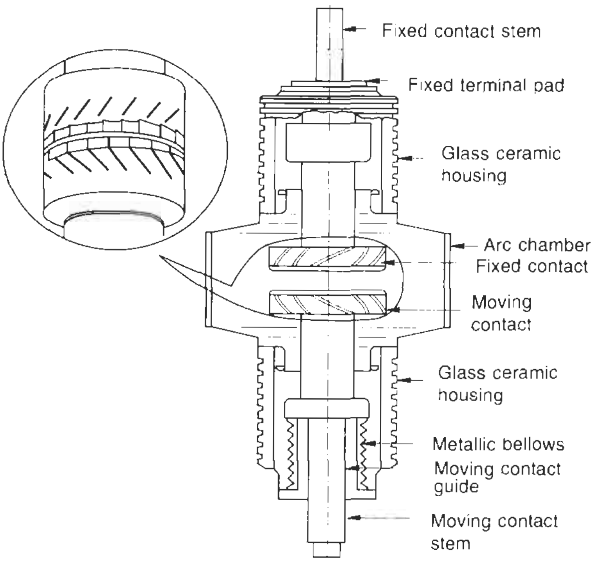

Figure 19.24 Sectional view of a 12 kV up to 2500 A, 40 kA vacuum interrupter (Courtesy: BHEL Ltd.)

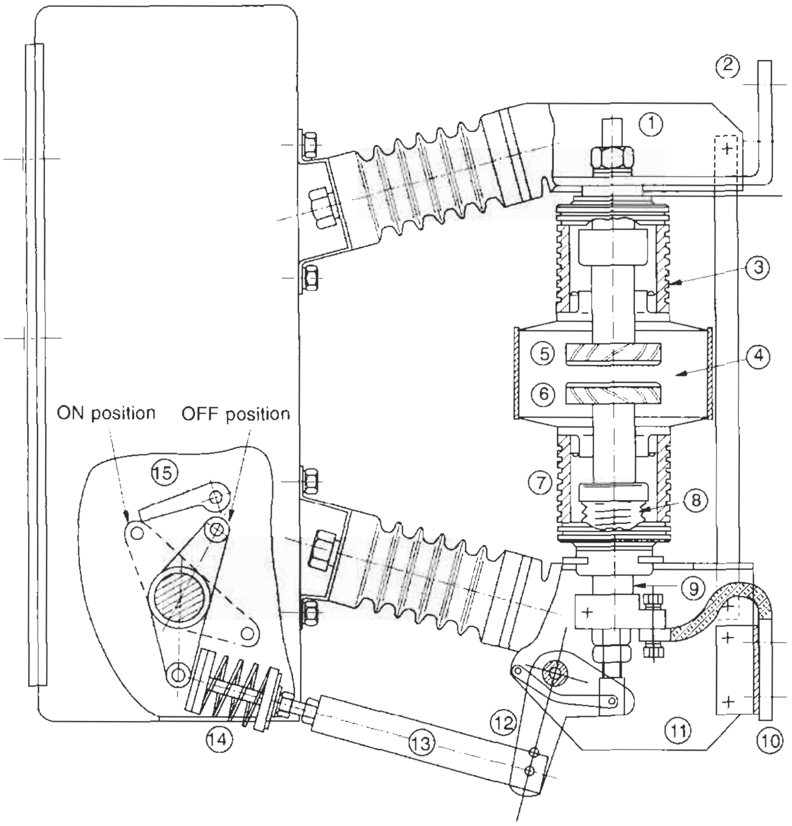

1. Upper interrupter support
2. Top terminal
3,7. Glass ceramic housing
4. Arc chamber
5. Fixed contact
6. Moving contact
8. Metallic bellows
9. Moving contact stem
10. Bottom terminal
11. Lower interrupter support
12. Lever
13. Insulated coupler
14. Contact pressure spring
15. Release pawl

Figure 19.25 A pole assembly of a vacuum circuit breaker

importance to limit the excessive boiling of the contacts due to the arc heat. It is possible to achieve this by suitably designing the contour of the contacts to increase their area. Depending upon the design of the contacts' contours, the breaker may be

- Axial magnetic field type or
- Transverse magnetic field type

In axial magnetic field type the shape of the contacts may be as shown in Figure 19.26(a). With this design of contacts the arc plasma will spread out axially and increase the contact area whereas in transverse magnetic field type breakers the contacts are like spiral slits in the form of petals. The design of contacts causes the current to flow radially outward along the contact, and gives it a rotational movement under the influence of electrodynamic forces (similar to a rotating arc SF_6 interrupting device, Section 19.5.5 and Figure 19.21). The rotational movement adds to the contact area and protects the contacts from damage and a reduced life. But in this case the arc will fall perpendicularly to the magnetic field. It is possible that it may impinge on the inside insulating lining of the contact chamber and rupture the interrupter. Axial magnetic field type contacts are therefore generally adopted by manufacturers.

19.6 Current chopping

With advances in technology in the field of circuit interruption, fast to extremely fast interrupting devices have been developed, aided by high-performing arc quenching and extinguishing mediums, as discussed above. While such techniques have helped in the interruption of system currents, particularly on faults (at very low p.f.s), they have also posed some problems in certain types of circuit breaking. For instance, an air blast circuit breaker and a vacuum circuit breaker are both extremely fast operating. When interrupting on a fault, their operation is as desired but at much lower currents than rated, such as at no-load, they may operate rather faster than desired and interrupt the circuit before a natural current zero. Premature interruption of a circuit such as this is termed current chopping and may occur just before a natural current zero when the current is small. In a VCB it is of the order of 3–5 A.

When the p.f. of the interrupting circuit is low, as when interrupting an induction motor or a transformer, running on no-load and drawing a small but highly inductive current, and when interrupting a highly capacitive circuit, such as a live but unloaded cable or overhead line carrying a high capacitive charging current, in all such cases during a circuit interruption the current

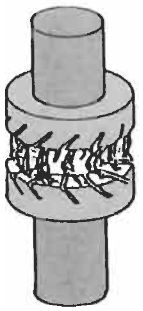

Arcing with contrate or slotted cup contact

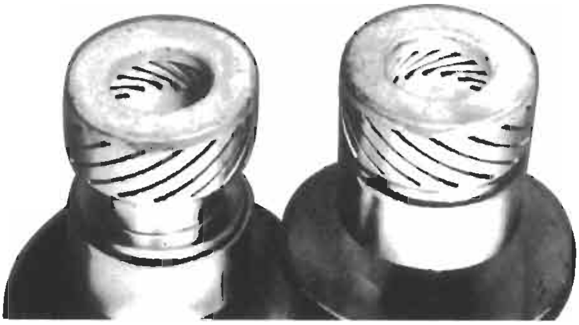

(a) Slotted cup type contacts of a 7.2 kV, 25 kA vacuum interrupter (Axial magnetic field type) (Courtesy: Siemens)

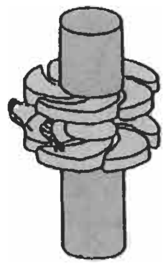

(b) Arcing with spiral petal contact (Transverse magnetic field type)

Figure 19.26 Magnetic arc control to increase the contact area of the arcing contacts in a VCB

may interrupt before a natural current zero and cause a near peak system voltage across the parting contacts. Figure 17.11(d) has been redrawn in Figure 19.27 for more clarity. Under the cumulative influence of the reflected wave and the equipment's back e.m.f., it may attain a value of high TRV, capable of breaking the dielectric strength across the parting contacts of the interrupting device. It may cause yet higher TRVs, until at least the immediate first natural current zero of the interrupting current. See TRV at current zero (Figure 19.27). Thus it would endanger the terminal equipment and the interconnecting cable. Such surge voltages (TRVs) have increased to 2.5–3 p.u. in normal operation. It is possible that the arc does not extinguish at the first current zero, point 'a' on the current wave. If a sufficiently high dielectric strength between the contacts is not attained, even by the next natural current zero (point '*b*') by virtue of an extremely low contact gap or an inadequate insulation level in the arc chamber of the interrupting device, the arc may restrike again and cause higher TRVs. This shall further complicates the process of interruption and extinction of the arc. See Blower *et al.* (1979), Telander *et al.* (1986) and IEEE transactions (1977).

Note

The surge frequency at which the TRV will restrike will be extremely high. It may be of the order of 10–100 kHz, depending upon the circuit constants *L* and *C*. To interrupt such high-frequency currents is difficult for an ordinary breaker. But with the use of high technologies, such as adopted in SF_6 and VCB interrupting devices, which make them fast operating (for arcing time see, Table 19.1), it is possible to interrupt, such high-frequency TRVs promptly.

19.6.1 Influence of frequency on the system

An a.c. current waveform passes through a natural zero every one half of a cycle. This is a highly redeeming factor in an a.c. system. It helps to extinguish an arc promptly, which is not so in a d.c. system. A higher power frequency than rated would in fact support the extinction of an arc, irrespective of its other magnetizing effects, while a lower power frequency than rated will delay and add to the complications of extinguishing an arc. At surge frequencies the situation becomes different, as the zeros occur so frequently that the contacts are

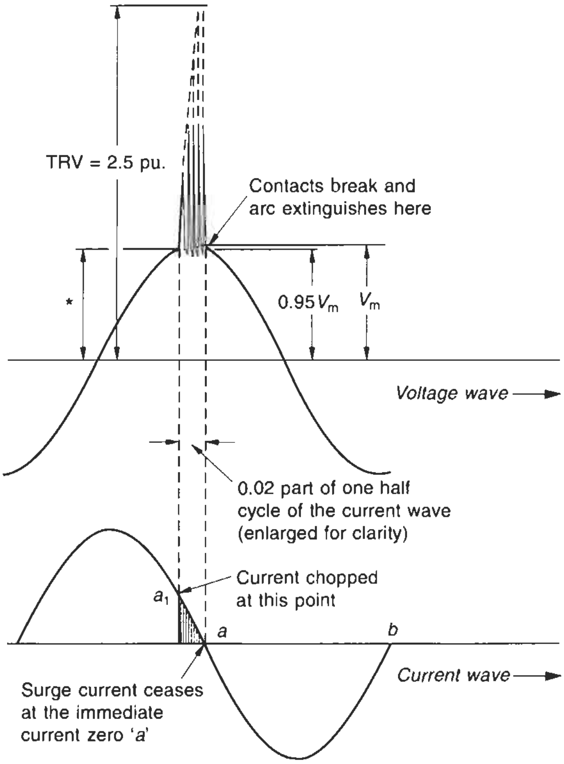

* Parting contacts are subject to this voltage which they are not able to withstand and cause an arc raising the TRV up to 2.5 pu

Figure 19.27 Approximate representation of assumed voltage and current waveforms illustrating a current-chopping effect and its attenuation while interrupting a circuit having 0.3 p.f.

subject to frequent restrikes, and are vulnerable to damage, while the actual extinction of an arc will take place only at a natural current zero. To cope with such situations the interrupters must be fast operating. Figure 19.27 illustrates the restriking phenomenon of the parting contacts during current chopping that is assumed to occur at point 'a_1', on the current wave. The actual current and voltage waveforms may differ from assumptions, depending upon the speed of the breaker, rate of deionization, current being interrupted, its p.f. and the instant at which the interruption initiates. In addition, the surge impedance of the circuit being interrupted. We assume that the TRV may rise to 2.5 p.u. and is interrupted by the immediate first current zero (i.e. at point 'a' in Figure 19.27) in about 0.02 part of one half of a cycle of a 50 Hz wave. During this period, if we consider the surge frequency of the interrupting circuit to be of the order of 13 kHz* the arc may restrike for nearly 2.6 cycles or 5 times before a final interruption as determined below.

Time for 0.02 part of one-half of a cycle of a normal frequency wave of 50 Hz, during which current chopping occurs:

$$= \frac{1}{2} \times \frac{1}{50} \times 0.02 \text{ second}$$

∴ Number of completed cycles of the TRV at the surge frequency of 13 kHz

$$= 13 \times 10^3 \times \frac{1}{2} \times \frac{1}{50} \times 0.02 \text{ cycles}$$

$$\simeq 2.6 \text{ cycles (approximately 5 restrikes)}$$

By the immediate first current zero it is assumed that the contacts have travelled sufficiently apart to achieve the required deionization and have built up adequate dielectric strength to withstand at least 0.95 V_m. If the circuit does not interrupt at the immediate current zero at 'a', which is so near to the point of chopping 'a_1', the interruption will take place only by the next current zero at point 'b' and result in another 260 strikes by then. To study more accurate behaviour of an interrupter, with the number of restrikes and the formation of the actual transient voltage waveforms on current chopping, oscillograms similar to those during a short-circuit test may be obtained (Section 14.3.6).

19.7 Virtual current chopping

This may occur during the interrupting process of a switching device when not all the three poles will interrupt simultaneously. It is corollary to a closing phenomenon (Section 17.7.2(ii)) when not all the three poles make at the same instant. This will also endanger the insulation of the other two phases. The interphase dielectric leakage capacitances, as illustrated in Figure 19.28, are the cause.

When one of the poles, say of phase R, starts opening first and faces a restrike of the arc, leading to surge frequency currents, similar (balancing) currents will be induced in the other two phases that are still closed, in addition to the normal current, I_1, that these poles will still be carrying. The result will be that when these two poles also open the charging currents at a surge frequency may virtually force a faster or premature current zero in phase B, as illustrated in Figure 19.29. This is termed virtual current chopping and may cause an additional TRV.

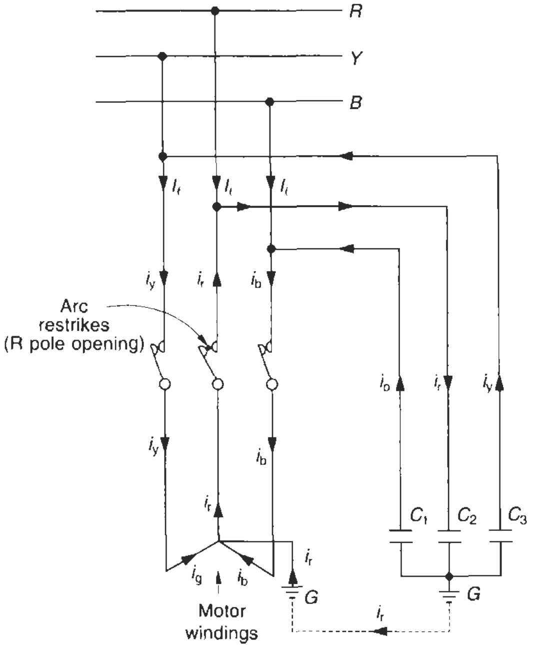

I_l = Load current
i_r, i_y, i_b = Charging or restriking currents
C_1, C_2, C_3 = Interphase dielectric leakage lumped capacitances

Figure 19.28 One pole opening.
Restriking phenomenon in phase 'R' causing charging currents in phases 'Y' and 'B' which are still closed

The amplitude of this TRV, however, may not be large due to a generally low surge impedance of the interrupting circuit during an interruption. It may achieve a level of only 0.6–0.7 p.u. (see Telander *et al.* 1986), which may sometimes prove fatal for the insulation of the terminal equipment due to its steepness. Charging currents would develop in phase Y also (at point 'y', but not shown to avoid overlapping of curves). But current chopping is not possible in this phase because point y' will fall further away from a current zero, on the one hand, and the Y-phase would carry a near-maximum current at this instant, on the other. Current chopping is a phenomenon of small currents.

19.8 Containing the severity of switching surges

19.8.1 Theory of energy balancing

From the above we can deduce that at the instant of current chopping the arc extinguishes for a moment and

---

*It is seen that the surge frequency during current chopping may rarely exceed 20 kHz and which, in the context of switching surges, may be considered as low-frequency oscillations, easy to handle and interrupt.

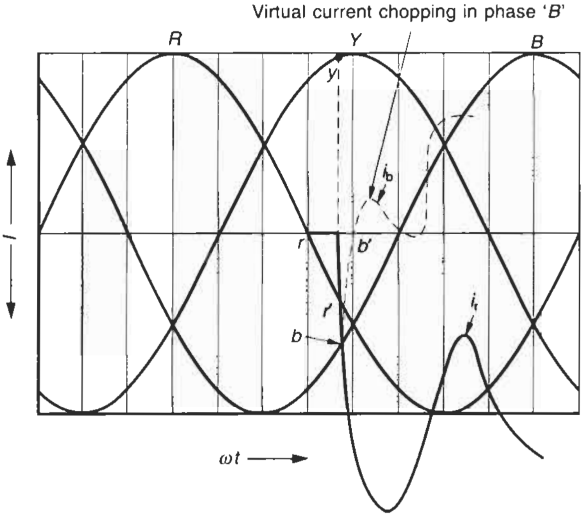

Location, r – Interruption commences
r' – Restrike of arc occurs in phase 'R' causing a charging current 'i_r'
y – Charging current 'i_y' develops in phase 'Y' (Not shown to avoid overlapping)
b – Charging current 'i_b' develops in phase 'B'
b' – Charging current i_b causes a virtual forced current zero or virtual current chopping at this point

Figure 19.29 An approximate illustration of a virtual current chopping in Phase 'B' as a consequence of restrike of arc in Phase 'R'

re-establishes as soon as the TRV reappears. At the instant of arc extinction, it may be considered that the arc energy is transferred to the dielectric medium of the parting contacts. This energy reappears in the form of a TRV across them, and tends to cause a restrike of the arc plasma once again. We can generally consider the arc energy as the magnetic energy caused by the magnetizing current of the interrupting circuit and the energy received by the dielectric medium as the capacitive energy.

If $I_{n\ell}$ is the inductive current in amperes (no-load current of the motor or the transformer, Figure 1.15) and L the inductance of the circuit being interrupted in henry, then the electromagnetic energy, J, initially contained by the arc plasma

$$J = \tfrac{1}{2} \cdot L \cdot I_{\text{nl}}^2 \text{ Joules}$$

Note

In fact, this energy should be less by the hysteresis loss (Section 1.6.2A.(iv)) which has been ignored in the present analysis. If V_t is the prospective peak surge voltage (TRV) in volts and C the dielectric capacitance of the contact gap in farad at the instant of restrike, then the capacitive energy J, received across the contact gap is

$$J = \tfrac{1}{2} \cdot C \cdot V_t^2 \text{ Joules}$$

For successful interruption of the arc plasma it is essential that the energy emitted by the arc plasma is at least equal to the capacitive energy received by the dielectric medium. At the instant of arc extinction, this phenomenon is termed energy balancing, when

$$\tfrac{1}{2} \cdot L \cdot I_{\text{nl}}^2 \simeq \tfrac{1}{2} \cdot C \cdot V_t^2$$

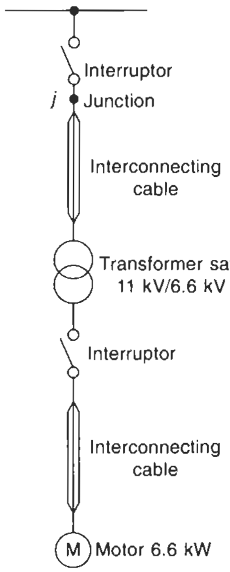

Figure 19.30(a)

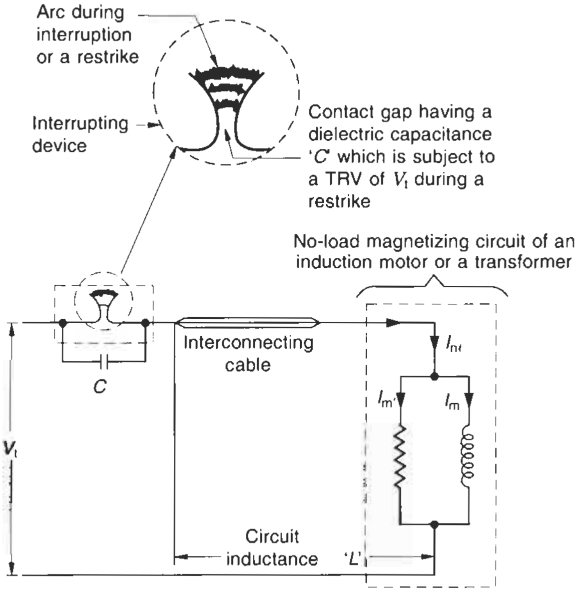

Figure 19.30(b) An energy-balancing phenomenon while interrupting a highly inductive circuit as shown in (a)

or $$V_t^2 \simeq I_{nl}^2 \cdot \frac{L}{C}$$

or $$V_t \simeq I_{nl}\sqrt{\frac{L}{C}} \simeq I_{nl} \cdot Z_s$$

We represent this through a circuit diagram (Figure 19.30) where

$\sqrt{L/C}$ is the surge impedance, Z_S, L and C the circuit constants of the interrupting circuit, as discussed in (Section 17.6.4). C represents the dielectric capacitance between the parting contacts of the interrupter. V_t must be prevented, as far as practicable, from reaching dangerous levels with the use of surge arresters.

$I_{n\ell}$ of equipment cannot be altered once it is manufactured. The surge voltage V_t, that will appear across the contacts therefore becomes a function of the inductance, L, of the circuit being interrupted. L is the inductance of the motor or the transformer windings up to the terminals of the interrupting device, including the inductance of the interconnecting cables or the bus system. The dielectric strength is the capacitance, C, between the contacts. The C of the contacts will change with the travel of the contacts and the deionization of the arc plasma. The influence of the inductance of the circuit L, can be reduced by introducing some capacitance or resistance into the circuit. Capacitance can be introduced by installing a few p.f. correction capacitor banks across the motor or the transformer terminals and the resistance can be introduced temporarily across the moving contact of the interrupting device through its closing mechanism. This is a practice adopted by leading manufacturers to provide a resistance where the interrupter is required to operate under adverse switching conditions.

19.9 Comparison of interrupting devices

To assist in making an easy selection of an interrupting device for a particular application, we have provided a comparison between the various devices as in Table 19.1.

Table 19.1 Comparison of interrupting devices

Main features	*BOCB*	*MOCB*[a]	*ACB*[b]	*ABCB*[a]	*SF_6*[a]	*VCB*[a]
1	2	3	4	5	6	7
1 Specifications						
(i) Medium of insulation and quenching of arc plasma	Oil	Oil	Air	Air blast	Sulphur hexafluoride	Vacuum
(ii) Nominal voltage ratings						
HT	3.3–200 kV	3.3–420 kV and above	Up to 22 kV (not in practice in light of better technologies in VCB's and SF6)	11–765 kV	6.6–765 kV and above	3.3 kV to 36 kV
LT	660 V	Not economical	660 V	Not applicable	Not applicable	Not applicable
(iii) Nominal current ratings	Manufactured in all possible current ratings	Only one break per pole, therefore current ratings in higher ranges are restricted	Up to 6000 A	Up to 4000 A and higher	Up to 4000 A and higher	As required
(iv) Closing time (between the instant of application of voltage to the closing coil and the instant when the contacts touch)[c]	5 cycles	4–6 cycles	1–2 cycles	2–3 cycles	4–5 cycles	2–3 cycles
(v) Opening time (between the instant ofapplication of voltage to the trip coil and the instant of separation of the arcing contacts)[c]	4–5 cycles	2–3 cycles	$\frac{1}{2}$–1 cycle	1–2 cycles	1–2$\frac{1}{2}$ cycles	1–2 cycles
(vi) Maximum duration of arc plasma (arcing time)[c]	0.75–1.25 cycles	2 cycles	$\frac{1}{2}$–1 cycle	$\frac{1}{2}$–1 cycle	1–1$\frac{1}{2}$ cycle	$\frac{1}{2}$–1 cycle
(vii) Total breaking time (between the instant of application of voltage to the trip coil and instant of final arc extinction)[c]	4.75–6.25 cycles	4–5 cycles	1–2 cycles	1$\frac{1}{2}$–3 cycles	2–4 cycles	1$\frac{1}{2}$–3 cycles
2 Theory of arc plasma (ionization of gases at high temperatures)	Emits ions of H_2 around 70% and remaining as acetylene and metallic vapours		Emits ions of N_2 (80%) and O_2 (20%) and metallic vapours		Emits ions of S^+ (protons), S^N (neutrons), accompanied by electrons S^e and F^- and metallic vapours	Emits metallic vapour from the contact material. Since the contacts are essentially made of copper alloy, copper having the lowest

(Contd)

1	2	3	4	5	6	7
						boiling point, the vapour is largely composed of copper ions
3 Theory of arc quenching and extinction, through deionization of arc plasma	Cooling of arc plasma is based on the bubble theory, H_2 cooling it by the turbulence caused by H_2 bubble		Deionization of N_2 (O_2 having a small content, has no significant influence) by lengthening of the arc plasma through the arc chutes, as a result of magnetic field induced in the metallic splitters of the arc chute by the inductive arc plasma	Deionization of N_2 and O_2 by a strong blast of air. The deionization force remains the same for one size of breaker, irrespective of the current	Deionization of free sulphur electrons S^e, takes place through their absorption by the fluorine ions F^- (electronegative theory)	Deionization of copper ions is natural and extremely fast
4 Number of no-load operations (depends upon the arc energy: the lower the arc energy, the higher will be the number of operations and vice versa).	Min. 1000	Min. 1000	Min. 1000	Min. 1000	Min. 5000	Min. 10 000–20 000
5 Maintenance	High, to check the condition of oil, contacts and arc quenching fins and devices	Checking the condition of oil is more frequent, in view of smaller quantity of oil	Very low maintenance except for checking the condition of the arcing contacts for any wear, tear or pitting		Requires very little maintenance, except periodic checks of pressure and condition of the contacts	Requires very little maintenance, except periodic checks of vacuum and condition of the contacts. Maximum contact erosion 2–3 mm
6 Dielectric strength compared to air	> 2	> 2	1	Compressed air has better than 1	2–3	Nearly 10 times (5 times of oil)
7 Arc energy compared to oil	1	1	–	–	Roughly $\frac{1}{3}$ (Figure 19.6) (Contact erosion low and suitable for frequent operations)	Roughly $\frac{1}{10}$ (Figure 19.6)
8 Whether suitable to interrupt small inductive (magnetizing) or capacitive currents, without causing current chopping	Yes (but for a limited number of switching operations), because of double break per phase that enables quick restoration of the dielectric strength	No, because of generally one break per pole, for breakers 12 kV and above, unless the breaker is specially designed with extra quenching system through a jet of oil	On an LT system, such a phenomenon has no relevance, because of high dielectric strength between the parting contacts compared to the system voltage	No, because of force of air blast even at small currents which may develop the tendency to current chopping. On the other hand, it is possible that the breaker may fail to interrupt the steep fronted TRVs	Yes, in all types of arc-quenching techniques: (i) Puffer type: because the flow of gas through the arc is a function of magnitude of current (ii) Rotating arc type: because the magnetic field that	Generally not, because of extremely fast deionization. It has the tendency to current chopping. However, in view of continuous development in this field, it has now been possible to achieve a chopping current as low

(Contd)

1	2	3	4	5	6	7
					drives the arc is produced by the interrupting current itself, and will vary with the current, and so will vary the cooling gas in direct proportion. The smaller the current to be interrupted, the smaller will be the magnetic field and the cooling force, enabling the arc to interrupt at a natural current zero only. But this technique is now seldom practised (iii) Thermal blast and arc assistance type: As (i) above	as 2A and even less. Therefore, except interrupting currents lower than this, these interrupters are suitable to interrupt such currents without current chopping
9 Application switching of • Induction motors • Generators • Transformers • Reactors • Inductive circuits • Capacitor banks • Distribution lines • Higher-speed auto-reclosing	(a) Suitable for all applications, not requiring frequent switching operations. (b) Until now they were being extensively used for all LT applications	(a) Suitable for all applications not requiring frequent switching operations	Extensively used for all LT applications and suitable for frequent operations	Generally suitable for HT distribution only, and at installations employing a number of such devices to make dry compressed air system handy and economical	Suitable for all applications. Switching of capacitor banks, however, may pose problem because of high TRVs. These may cause a restrike of the arc plasma and give rise to switching surges	Suitable for all types of industrial needs and frequent operation. Their ability for quick interruption and fast building up of dielectric strength made them suitable for onerous duties and high TRVs
10 Whether a surge arrester is essential	No	No	No	Better to provide (depending upon the type of equipment it is switching, the minimum current it has to interrupt and the likely amplitude of TRV)	Generally not	Yes, particularly for dry insulated equipment (such as an induction motor, a dry type reactor or a dry type transformer), which have low insulation levels. An oil-immersed equipment (such as a power transformer), having a relatively much better dielectric strength, may be switched without an arrester

(Contd)

1	2	3	4	5	6	7
11 Effect of leakage on performance:						
(i) Operating safety	Since the oil is filled at atmospheric pressure, there is generally no leakage		Not applicable	Not applicable	(i) Generally, the use of SF_6 is safe, inhaling is poisonous. If there is a leakage it would be dangerous. SF_6 itself is non-toxic, but decomposed SF_6 is moderately toxic and must be handled under controlled conditions. Training and guide-lines are essential for personnel working on such equipment. Site data collected from various sources, however, suggest a leakage rate of less than 0.1% per annum	Generally a safe equipment. But in the event of vacuum leakage which, although remote, may cause a fire hazard and X-rays. X-ray warning and proper shielding may be essential
(ii) Dielectric strength	Not applicable	Not applicable	Not applicable	Not applicable	Still high	Zero
(iii) Interrupting capacity	Not applicable	Not applicable	Not applicable	Not applicable. But if the leakage is in the compressed air supply system, the breaker may not interrupt on fault, depending upon the air pressure the system is able to maintain on a leakage	In the event of a leakage, the breaker will still be in a position to interrupt the normal currents	In the event of a leakage, the breaker will not be in a position to interrupt even normal currents
12 Fire hazards	Generally, oil is fire hazardous, but not prone to it unless the dielectric strength reaches a very low level and the medium itself becomes conducting. Nevertheless, they are not suitable at locations which are fire hazardous. Normal make or break, even on fault, may only deteriorate the quality of oil, but yet not make it fire hazardous, unless as noted above		They may be rated as more fire hazardous than a BOCB or MOCB in view of arc formation taking place in the open, although under controlled conditions. They are not suitable for installations prone to fire hazards, unless the sub-station or the control room where they are installed is isolated from the area of hazards (Section 7.11). They are generally suitable for all other areas		Arc formation and extinction takes place inside a sealed chamber, thus emitting no gases or vapours to the atmosphere, which may be a cause of fire hazard. They are the most appropriate choice for such areas	
13 Noise level	Quiet operation	Quiet operation	Except during an interruption, it has quiet operation	Thunderous noise during an interruption, because of air blast. The intensity can be controlled by providing silencers	Quiet operation	Quiet operation

(Contd)

1	2	3	4	5	6	7
14 Trends	These breakers were extensively used until a few years ago (say, 1970s) but are now fast losing their hold in favour of SF_6 and VCBs for HT and ACBs for LT systems		Only breaker for all LT applications	In lower ranges, say, up to 66 kV, this breaker is now fast losing its hold in favour of SF_6, due to cost considerations and the cumbersome dry air pressure system. In higher ranges, say, 120–765 kV, however, they are still being used but only rarely	This has become the most preferred breaker with the widest voltage range and suitability for all applications	This has the latest technology in the arc interruption and suitable for all applications as noted above, particularly in view of having achieved a very low chopping current, of the order of just 2A and even less. In view of current chopping and limited voltage range, however, it is facing limitations in its extensive application. The development work on higher ranges is still under way and not many breakers above 36 kV have been produced so far. Tendency to a cold weld, during closing and change in the arc chamber pressure, during an interruption which may damage the metallic bellows (Figure 19.24), have also been noted as disadvantages in their extensive use

[a] These comparisons relate only to HT interrupters.

[b] For LT systems only.

[c] Referred to at power frequency (50 or 60 Hz) and rated current. These figures are approximate and for a general reference only. They may vary with rating, loading and manufacturer. For lower voltage ratings, they may be shightly higher.

Relevant Standards

IEC	*Title*	*IS*	*BS*
60056/1987	High voltage alternating current circuit breakers	13118/1991	BS 5311/1996
60298/1990	A.C. metal enclosed switchgear and controlgear for rated voltages above 1 kV and up to and including 52 kV	3427/1991	BS EN 60298/1996
60517/1990	Gas insulated metal-enclosed switchgear for rated voltages of 72.5 kV and above	–	BS EN 60517/1997
60947-2/1998	Low voltage switchgear and controlgear, Circuit breakers	13947-2/1993	BS EN 60947-2/1996

Related US Standards ANSI/NEMA and IEEE

NEMA/SG-3/1995	Low voltage power circuit breakers
NEMA/SG-4/1990	A.C. HV circuit breakers
NEMA/SG-6/1995	Power switching equipment
ANSI C 37.06/1994	A.C. HV circuit breakers rated on a symmetrical current basis – preferred ratings and related required capabilities
ANSI C 37.16/1998	Low voltage power circuit breakers – preferred ratings and application recommendations

Notes

1 In the tables of Relevant Standards in this book while the latest editions of the standards are provided, it is possible that revised editions have become available. With the advances of technology and/or its application, the updating of standards is a continuous process by different standards organizations. It is therefore advisable that for more authentic references, readers should consult the relevant organizations for the latest version of a standard.

2 Some of the BS or IS standards mentioned against IEC may not be identical.

3 The year noted against each standard may also refer to the year of its last amendment and not necessarily the year of publication.

Further reading

1 Bettge, H., 'Design and construction of vacuum interrupters', *Siemens Circuit*, **XVIII**, No. 4 (1983).

2 Blower, R.W., Distribution Switchgear, Collins Professional and Technical Books, 1986.

3 Blower, R.W., Cornick, K.J. and Reece, M.P. 'Use of vacuum switchgear for the control of motors and transformers in industrial systems', *Electric Power Applications*, **2**, No. 3, June (1979)

4 Bouilliez, O., 'Mastering switching voltage transients with SF_6 switchgear', *Cahiers techniques Merlin Gerin*, No. 125.

5 'Current chopping phenomena of MV circuit breakers', *IEEE Transactions*, **PAS -96**, No. 1 (1977).

6 Pelenc, Y. 'Review of the main current interruption techniques' Voltas Limited, Switchgear Division, India.

7 Ramaswamy, R., 'Vacuum circuit breakers', *Siemens Circuit*, **XXIII**, April (1988)

8 Telander, S.H., Wilhelm M.R. and Stump, K.B., 'Surge limiters for vacuum circuit breaker switchgear', CH 2279–8/86/0000–003751.00, *IEEE* (1986)

20

Temporary Overvoltages and System Grounding

Contents

20.1 Theory of overvoltages

A three-phase balanced system has all the three phasors of voltage and current 120° apart, as illustrated in Figure 20.1(a) for a conventional anti-clockwise rotation. These phasors are known as positive sequence components. During a fault, this balance is disturbed and the system becomes unbalanced being composed of two balanced components, one positive and the other negative sequence (Figures 20.1(a) and (b)). For a description of the effects of these components, refer to (Section 12.2(v)). During a ground fault, zero phase sequence components also appear, which are single phasor components and combine three equal phasors in phase, as shown in Figure 20.1(c). This is the residual voltage, V_g, that appears across the ground circuit, i.e. between the neutral and the ground as illustrated in Figure 20.12. This voltage is responsible for a fault current, $I_g \cdot I_g$ will flow through the grounded neutral when it is a three-phase four-wire neutral grounded system, as shown in Figure 20.12. It will also flow through a three-phase three-wire artificially grounded system when it is grounded through a neutral grounding transformer (Section 20.9.1) as illustrated in Figures 20.17 and 20.18. In a three-phase three-wire system, which has neither its own grounded neutral nor an artificially created grounded neutral, there will be no direct ground fault current. But charging currents through the ground leakage capacitances, particularly on an HT system, may still exist, as illustrated in Figures 20.2–20.4.

These currents may develop dangerous overvoltages across the healthy phases, under certain ground circuit impedance conditions, as discussed in Section 20.2.1(1). It is thus possible to encounter a ground fault, even when the system is not grounded, the fault current finding its return path through the ground leakage capacitances. While an LT system, in view of a far too low ground voltage, V_g (equal to line voltage, Section 20.2.1(1)), as compared to high ground capacitive leakage reactance, X_{cg}, would cause a near open circuit (V_g/X_{cg} being too meagre) and stay immune, leaving the grounded conductor floating at $V_g = V_\ell$.

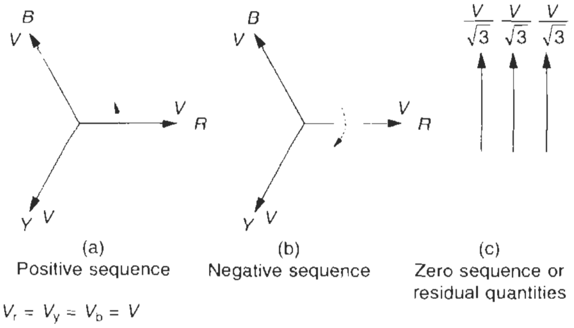

(a) Positive sequence

(b) Negative sequence

(c) Zero sequence or residual quantities

Figure 20.1 Phasor representation of an unbalanced power system on a ground fault

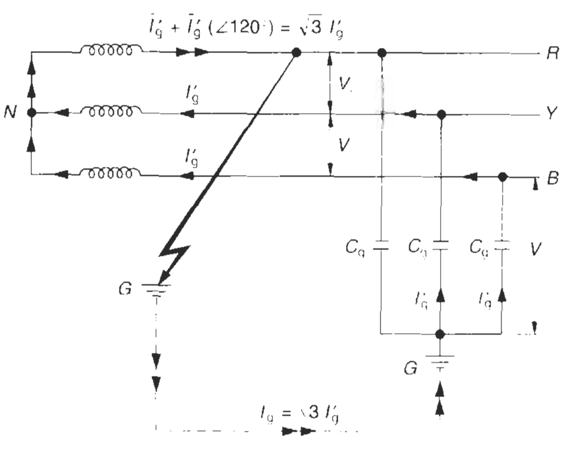

Figure 20.2 An ungrounded or isolated neutral system (circuit completing through the ground leakage capacitances)

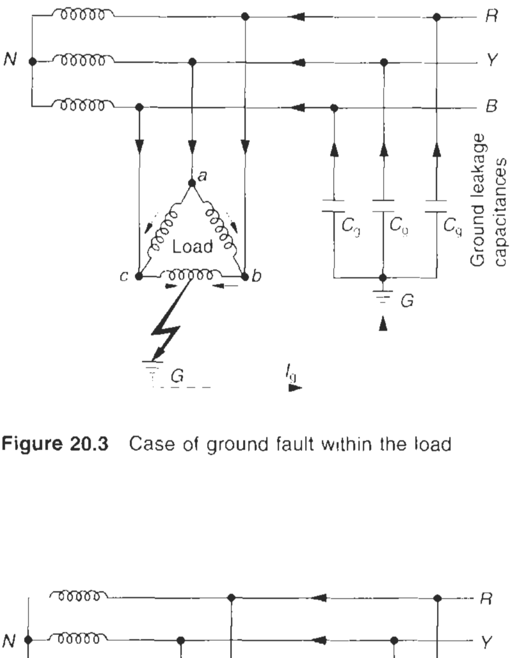

Figure 20.3 Case of ground fault within the load

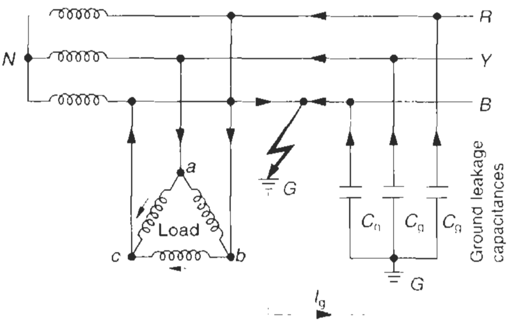

Figure 20.4 Case of a ground fault on a power system on the load side

20.2 Analysis of ungrounded and grounded systems

This is related more to an HT system.

20.2.1 Analysis of an ungrounded system

This is common to

- A three-phase three-wire, star connected isolated neutral system,
- A delta connected system, or
- A three-phase four-wire, ungrounded system.

An ungrounded a.c. system is more often subject to overvoltages. The reason is that even when the system is not connected to ground, it makes a ground connection through the coupling of the leakage ground capacitances, as illustrated in Figure 20.2. For all purposes these capacitances may be regarded as equal and uniformly distributed, providing a balanced system. In the event of a ground fault, this circuit is closed as shown and a capacitive current, I'_g, flows back to the healthy phases via these capacitances C_g, Analysing the circuit of Figure 20.2, the following may be derived:

If C_g = electrostatic or leakage capacitance to the ground per phase, providing the return path to the fault current I_g, in the event of a ground fault on the system. This current will be capacitive in nature.

X_{cg} = ground capacitive reactance per phase

$$= \frac{1}{2\pi f \cdot C_g}$$

Under transient conditions, f becomes surge frequency, f_s and

$$X_{cg} \text{ becomes, } \frac{1}{2\pi f_s \cdot C_g}$$

$$\text{where } f_s = \frac{1}{2\pi\sqrt{L \cdot C_g}}$$

L being the inductance of the circuit.

If I_g = ground fault current

V_g = ground potential, which is the same as zero sequence voltage or residual voltage

V_ℓ = line voltage and

V_p = phase voltage

then on a ground fault, say, in phase R, the voltage across this phase will reduce to zero, while the ground potential across the healthy phases will rise to V_ℓ from a zero level earlier. It will cause a fault current I'_g, in the healthy phases also, through the ground leakage capacitances such that $I'_g = V_l/X_{cg}$ (assuming the ground circuit has no other impedance) and the ground fault current through the grounded circuit,

$$I_g = \overline{I_Y} + \overline{I_B}$$

$$= \overline{I'_g} + \overline{I'_g} \text{ (both phasors being 60° apart)}$$

$$= \sqrt{I'^2_g + I'^2_g + 2 \cdot I'_g \cdot I'_g \cdot \cos \cdot 60^\circ} \text{ (as in Section 15.4.3)}$$

$$= \sqrt{(I'^2_g + I'^2_g + I'^2_g)}$$

$$= \sqrt{3} \cdot I'_g \text{ (but this current may not be enough to trip a protective relay)}$$

The voltage across the healthy phases is now $\sqrt{3}$ times or 73% more than the phase to neutral voltage under healthy conditions.

Under certain line to ground impedance conditions, when the ground circuit may also contain some inductive reactance, the voltage of the healthy phases may rise further, much above the system voltage, due to resonance and ferro-resonance effects (see below). All this in turn may tend to swing the system to an unstable state. It may also cause arcing grounds* at the supporting insulators, leading to voltage surges, travelling in both directions along the line, and may be enough to cause damage to the line insulators and the terminal equipment.

The magnitude of overvoltage will depend upon the actual inductive reactance introduced through the ground circuit. The unintentional introduction of an impedance into the ground leakage capacitive circuit is generally a result of a ground fault in the main equipment such as a generator, a transformer, power capacitors or an induction motor and when one or more of their phase windings forms a part of the ground circuit, as illustrated in Figure 20.3. Under such conditions, they will introduce their own inductive, capacitive or resistive impedances or a combination of them into the ground circuit and alter the parameters of the ground capacitive circuit. Figure 20.5 illustrates the system of Figure 20.2, drawn simply on a single phase basis. The current through the ground circuit will be zero when the system is healthy, the ground leakage capacitances finding no return path (Figure 20.6). It is not necessary that the equipment itself should develop a ground fault and then only its impedance will be inducted into the ground circuit. It may be introduced into the circuit even when there is a line or a system ground fault, as illustrated in Figure 20.4. The ground circuit may give rise to dangerous voltages in the healthy phases, as analysed below.

(1) *When the external impedance is a resistance or a capacitive reactance*

Referring to Figure 20.5, if Z'_g is the external impedance introduced into the natural leakage ground circuit, as a consequence of a ground fault, as shown in Figures 20.3

---

* Arcing grounds: This occurs during a temporary ground fault on an ungrounded HT system. It causes an arc between the line conductor and the ground, which may be direct or through the flashover of the line insulators, due to overvoltage. The ground leakage capacitors that may be considered as charged with the line voltage are discharged to the ground on developing a ground fault. The supply voltage would charge them again and so the process will repeat until the fault exists. The repeated discharges and charges of ground capacitors during the fault produce arcs and are termed arcing grounds, giving rise to voltage surges.

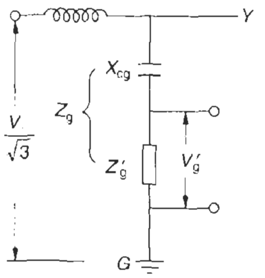

X_{cg} = Ground leakage capacitive reactance
Z'_g = Additional impedance (R, X_c or X_L)

Figure 20.5 Equivalent ground circuit representing the power system of Figure 20.2

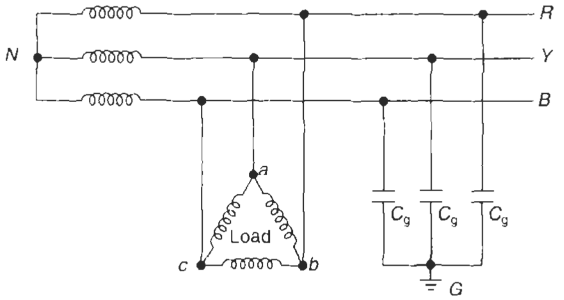

On a healthy system the ground leakage capacitances find no return path and therefore do not activate. They do so when there is a ground fault as illustrated in Figures 20.3 and 20.4

Figure 20.6 A healthy system

and 20.4, then the voltage across the impedance Z'_g can be determined as follows:

When the impedance is a resistive reactance
The peak voltage $V'_{g(max)}$ across R will be

$$V'_{g(max)} = \frac{R}{\sqrt{R^2 + X_{cg}^2}} \cdot \sqrt{2} \cdot V_\ell \qquad (20.1)$$

Computing values of $V'_{g(max)}$ by approximating, in terms of circuit resistance R and ground capacitive reactance X_{cg}, when

$R = 0, \quad V'_{g(max)} = 0$

$R = \frac{1}{2} X_{cg}, \; V'_{g(max)} = \frac{1/2}{\sqrt{(1/4 + 1)}} \cdot \sqrt{2} V_\ell \; = 45\% \text{ of } \sqrt{2}\, V_\ell$

$R = X_{cg}, \quad V'_{g\,max} = \frac{1}{\sqrt{2}} \cdot \sqrt{2}\, V_\ell \simeq 71\% \text{ of } \sqrt{2}\, V_\ell$

$R = 1 \cdot 5 X_{cg}, \quad V'_{g\,max} = \frac{1 \cdot 5}{\sqrt{3 \cdot 25}} \cdot \sqrt{2}\, V_\ell \simeq 83\% \text{ of } \sqrt{2}\, V_\ell$

$R = 2X_{cg}, \; V'_{g\,max} = \frac{2}{\sqrt{5}} \cdot \sqrt{2}\, V_\ell \simeq 89\% \text{ of } \sqrt{2}\, V_\ell$

As R approaches infinity; $V'_{g(max)}$ will tend to approach $\sqrt{2} V_\ell$.

The variation in $V'_{g\,max}$ with the variation in resistive reactance, R, in the ground circuit, is shown in Figure 20.7, curve 1.

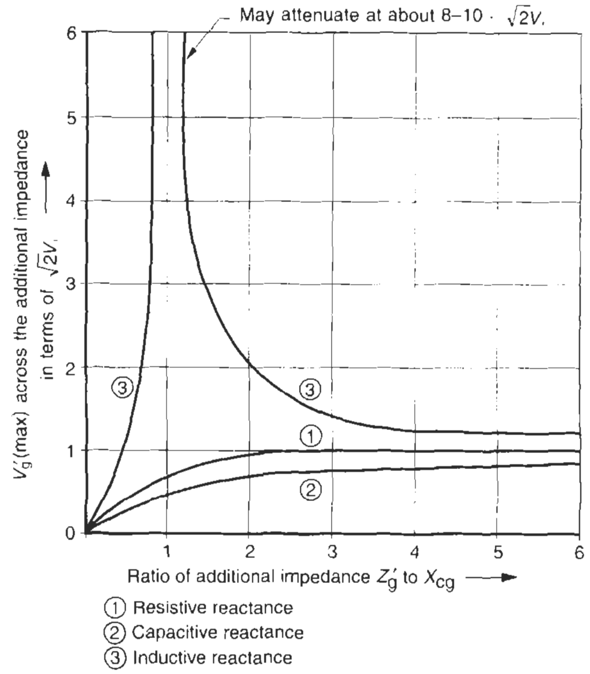

Figure 20.7 Influence of external impedance Z'_g in the ground circuit on the system voltage in the event of ground fault in an ungrounded system

Inference
Irrespective of the value of the external resistance (R) in the ground circuit, the maximum voltage the healthy phases may have to sustain will not exceed $\sqrt{2} V_\ell$, in the event of a ground fault on an ungrounded system.

When the impedance is a capacitive reactance
Referring to Figure 20.5, the peak voltage V'_g across X_c will be

$$V'_{g\,max} = \frac{X_c}{X_c + X_{cg}} \cdot \sqrt{2}\, V_\ell \qquad (20.2)$$

Computing $V'_{g\,max}$ along similar lines to those above, i.e. when

$X_c = 0, \quad V'_{g\,max} = 0$

$X_C = \frac{1}{2} X_{cg}, \quad V'_{g\,max} = \frac{\frac{1}{2}}{\frac{1}{2} + 1} \cdot \sqrt{2} V_\ell = 33.3\% \text{ of } \sqrt{2} V_\ell$

$X_c = X_{cg}, \quad V'_{gmax} = \frac{1}{2} \cdot \sqrt{2}\, V_\ell = 50\% \text{ of } \sqrt{2} V_\ell$

$X_c = 1 \cdot 5\, X_{cg}, \quad V'_{g\,max} = \frac{1 \cdot 5}{2 \cdot 5} \cdot \sqrt{2}\, V_\ell = 60\% \text{ of } \sqrt{2}\, V_\ell$

$X_c = 2X_{cg}, \quad V'_{g\,max} = \frac{2}{3} \cdot \sqrt{2}\, V_\ell = 66.7\% \text{ of } \sqrt{2}\, V_\ell$

As X_c approaches infinity, $V'_{g\,max}$ will tend to approach $\sqrt{2} V_\ell$. The variation in $V'_{g\,max}$ with the variation in capacitive reactance, X_c, in the ground circuit is shown in Figure 20.7, curve 2.

Inference

This is same as for resistive impedance. In these two cases, when the external impedance is resistive or capacitive, there is no excessive voltage rise across the healthy phases of the system beyond $\sqrt{2}\,V_t$. The voltage developed across the ground capacitance, X_{cg}, and the external impedance R or X_c is shared in the ratio of their own values, the sum total of which will remain constant at $\sqrt{2}\,V_t$.

(2) *When the external impedance is an inductive reactance*

Now the situation is different, as resonance and ferro-resonance effects in the series inductive-capacitive circuits may cause dangerous overvoltages.

(i) Resonance effect

Referring to Figure 20.5, the peak voltage V_g' across X_L will be

$$V'_{g\,max} = \frac{X_L}{X_{cg} - X_L} \cdot \sqrt{2}\,V_t \qquad (20.3)$$

Computing V_g' along similar lines to those for resistive impedance,

i.e when $X_L = 0$ $\qquad V'_{g\,max} = 0$

$$X_L = \tfrac{1}{2} X_{cg} \quad V'_{g\,max} = \frac{\frac{1}{2}}{1 - \frac{1}{2}} \cdot \sqrt{2}\,V_t = \sqrt{2}\,V_t$$

$X_L = X_{cg}$, $\qquad V'_{g\,max}$ will tend to approach infinity

This is known as a resonating condition. It is, however, seen that in view of some in-built impedance in the ground circuit it will tend to attenuate the alarmingly rising voltage $V'_{g\,max}$, to oscillate at around 8 to 10 times $\sqrt{2}\,V_t$. This voltage will tend to raise the ground potential substantially, depending upon the value of the external impedance X_L. It will also raise the ground potential of the healthy phases, which may cause arcing grounds and become dangerous to the line insulators and the terminal equipment. This is known as the resonance effect of the inductive reactance.

When

$$X_L = 1.5 X_{cg}, \quad V'_{gmax} = \frac{1.5}{0.5} \cdot \sqrt{2}\,V_t = 3 \cdot \sqrt{2}\,V_t$$

$$X_L = 2 X_{cg}, \quad V'_{gmax} = 2 \cdot \sqrt{2}\,V_t$$

$$X_L = 3\,X_{cg}, \quad V'_{g\,max} = \frac{3}{2} \cdot \sqrt{2}\,V_t = 1.5 \cdot \sqrt{2}\,V_t$$

As X_L approaches infinity, $V'_{g\,max}$ will tend to approach $\sqrt{2}\,V_t$. This variation in $V'_{g\,max}$ with the variation in inductive reactance, X_L, is also shown in Figure 20.7.

The inductive reactance, X_L, will tend to offset the ground capacitive reactance X_{cg} and diminish the denominator to a certain value of X_L, say, until it completely offsets the content of X_{cg} ($X_L = X_{cg}$). At higher ratios, when $X_L > 3\,X_{cg}$, the denominator will rise more rapidly than the numerator and will tend to attenuate the $V'_{g\,max}$ as with R and X_c', but at a slightly higher value of $V'_{g\,max}$ (Figure 20.7, curve 3).

(ii) Ferro-resonance effect

The above analysis of overvoltages in the healthy phases of an ungrounded system in the event of a ground fault on one of the phases was based on the assumption that the inductive reactance of the electromagnetic circuit, i.e. the magnetic core of the connected equipment (which may be a transformer or an induction motor) was linear over its entire range of operation. But this may not always be true. It is also possible that some components such as a CT or a CVT, may have their magnetic core gradually saturated* during normal operation, under certain circuit conditions and resonate with the ground capacitive reactance X_{cg}. This may lead to a high voltage in a healthy system, even when there is no ground fault, the ground circuit becoming completed through the grounded neutral of such a device (Figure 20.8).

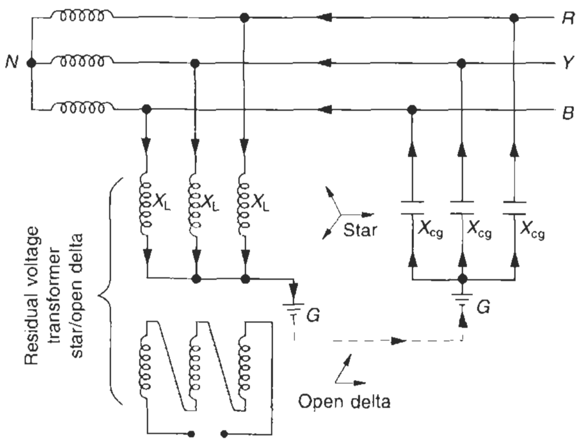

During saturation $X_L \simeq X_{cg}$ leading to the phenomenon of ferro-resonance

Figure 20.8 Case of a ferro-resonance in a residual VT leading to overvoltages even in a healthy system

The phenomenon of saturation of the magnetic core of such a device during normal operation and its resonance with the ground capacitive reactance, X_{cg}, is known as ferro-resonance. It would have the same effect on the healthy phases/system as in (i) above.

The inductive reactance of the magnetic circuit on saturation may fall to a much lower value than the linear inductive reactance of the magnetic core, as a consequence of design requirements, and lead to a condition of low X_L to X_{cg} ratio (say $X_L \simeq 1.5$ to $2\,X_{cg}$) in curve 3 of Figure 20.7. Under such a condition, the voltage across X_L will tend to oscillate automatically between certain overvoltage limits. The effective X_L is seen to match the ground capacitive reactance X_{cg} such that it helps to dampen the overvoltages across the healthy phases, to oscillate at around two to three times $\sqrt{2}\,V_t$.

---

*Saturation of transformers also produces high currents, rich in harmonics.

Such a situation may also arise in electromagnetic equipment, which is subject to a varying system voltage during normal operation. One example is a residual voltage transformer (RVT) (Section 15.4.3) which is required to detect an unbalance (zero sequence) or a ground fault in the primary circuit and may reach early saturation. A similar situation is also possible in a measuring CT and even a protection CT, as both may saturate at a certain level of fault current in the primary. The same situation would arise in a CVT (Chapter 15). Such devices (CTs and CVTs) are generally grounded as a safety requirement, and may give rise to such a situation during normal operation, even in a healthy system.

20.3 The necessity for grounding an electrical system

An ungrounded system, in the event of a ground fault, is subject to an overvoltage, as noted in Section 20.2.1. It is prone to cause yet higher voltages in the healthy phases when its ground circuit becomes inductive, as discussed above. The overvoltage may damage the supporting insulators and the terminal equipment. Should a system be left ungrounded? This aspect must be viewed with the above phenomena in mind. It may also cause arcing grounds and prove fatal to a human body coming into contact with the faulty equipment or the conductor. Assuming that a total power system, from its generating station to the far end LT distribution network (Figure 13.21) is left ungrounded and a ground fault occurs somewhere on the LT side, the fault current through the human body will find a return path through the grounding capacitances, no matter how feeble it may be. This current may be dangerous to a human for which even 10 mA is fatal, as discussed in Section 21.2.1.

Generally, neutral grounding should be adopted in principle to avoid generation of overvoltages and to eliminate the phenomenon of arcing grounds. Even a solidly grounded system, with a very low resistive reactance, can avoid such overvoltages as the fault current on a ground fault will find its return path through the shortest solid ground conductor, having a low resistance, rather than through the ground capacitances, which have a relatively much higher capacitive reactance. (See Figure 20.12.)

Below we briefly discuss the criteria and theory of selecting a grounding system to achieve a desired level of fault current to suit a predetermined ground fault protection scheme, i.e. type of grounding and grounding impedance to suit the system voltage, type of installation, and location of installation.

20.4 Analysis of a grounded system

Consider Figure 20.12 again, when the neutral N is solidly grounded. Also refer to Figure 20.1. If

V_ℓ = line voltage

Z_1 = positive sequence impedance

This is measured between phase to phase or phase to neutral, depending upon the availability of the neutral. The test current is kept at the rated value for the equipment or the system under test. For the system shown in Figure 20.9(a).

$$Z_1 = \frac{V_1}{\sqrt{3} \cdot I_r}$$

Z_2 = negative sequence impedance.

This is the same as above, but now a negative sequence voltage is applied (by interchanging one of the phases of the source of supply)

Z_0 = zero phase sequence or residual impedance. This is measured between the three-phase terminals of a star winding shorted together and the neutral (Figure 20.9(b)) and is calculated by

$$Z_0 = 3 \cdot \frac{V_\ell}{\sqrt{3}} \cdot \frac{1}{I_r} \text{ or } 3 \cdot \frac{V}{\sqrt{3} \cdot I}$$

where $\dfrac{V}{\sqrt{3}}$ = test voltage and

I = test current, to be around the current-carrying capacity of the neutral.

Also $Z_0 = 3\overline{R_0} + 3\overline{X_0}$

where R_0 = zero phase sequence or residual resistance, and

X_0 = zero phase sequence or residual reactance

Z_g = total impedance through the ground circuit

I_g = ground fault current, zero sequence current or residual current through the ground circuit

V_g = ground potential, which is the same as the zero sequence voltage or residual voltage. In a ground fault, it would remain at $V_\ell'/\sqrt{3}$ unlike at V_ℓ in an ungrounded system (Section 20.2).

The residual voltage may also be measured by a residual voltage transformer (RVT) (Figure 20.10). Refer to Section 15.4.1 for more details.

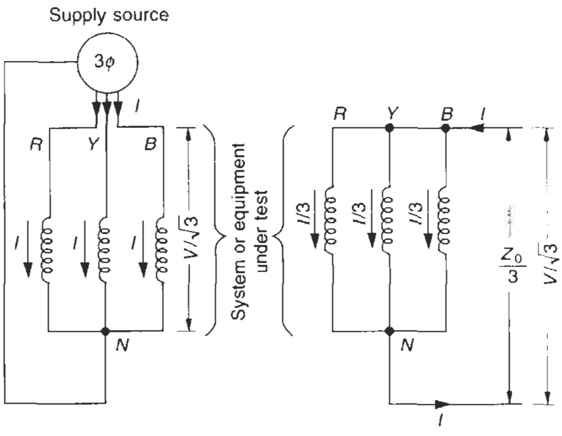

(a) To measure positive sequence impedance

(b) To measure zero sequence impedance

Figure 20.9 Measuring system impedances

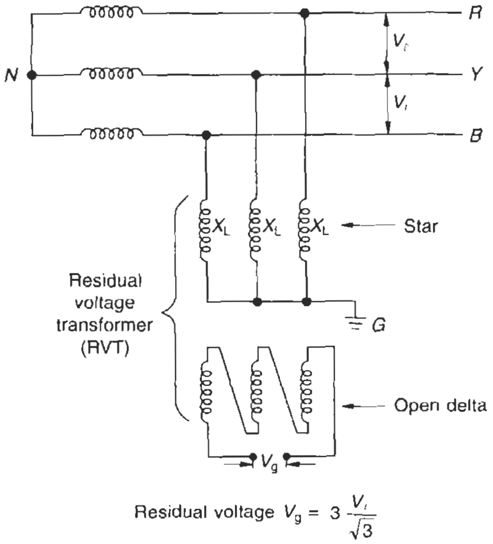

Figure 20.10 Detecting a ground fault in an isolated neutral system

Then the total impedance through the ground circuit

$$Z_g = \bar{Z}_1 + \bar{Z}_2 + \bar{Z}_0$$

and the fault current through ground circuit

$$I_g = \frac{3V_g}{Z_g}$$

or $$I_g = \frac{3 \cdot V_\ell}{\sqrt{3} \cdot Z_g}$$

The residual current may also be measured by a three-CT method as illustrated in Figure 20.11.

When some extra impedance R, X_C, X_L or a combination of these is introduced into the ground circuit it will become possible to alter the magnitude and the characteristic of the ground circuit current, I_g, to suit an already designed ground fault protection scheme as discussed below.

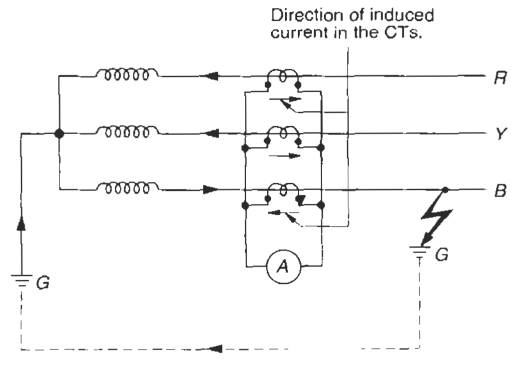

Figure 20.11 Measuring the residual current

A three-phase four-wire system may be grounded in the following ways:

1 Solid neutral grounding system or
2 Impedance neutral grounding system

20.4.1 Solid neutral grounding system (also known as effectively grounded system)

We have already discussed a solid neutral grounding system in Section 20.3. The residual voltage or the ground potential rises to the phase voltage $V_\ell/\sqrt{3}$ and does not alter the voltage of the healthy phases. To analyse this system, we have redrawn the circuit of Figure 20.2 in Figure 20.12, grounding the neutral solidly. The impedance to ground, Z_g, through the neutral circuit will be extremely small and resistive in nature, compared to the ground capacitive reactance X_{cg}, i.e. $Z_g << X_{cg}$, and will share most of the fault current. The current through the ground leakage capacitances may be ignored to derive an easy inference. The effectiveness of grounding and its impedance will play the most decisive role in determining the fault current and the most appropriate protection.

20.4.2 Impedance neutral grounding system

Consider the system shown in Figure 20.12 and introduce some impedance Z_g in its neutral circuit as shown in Figure 20.13. Now it is possible to vary the magnitude and characteristic of the fault current through the neutral circuit.

If I_g = ground fault current and
I'_g = fault current through the healthy phases due to neutral impedance Z_g

then current through the neutral circuit, as a result of impedance Z_g,

$$= \overline{I'_g} + \overline{I'_g}$$

$$= \sqrt{3} \cdot I'_g$$

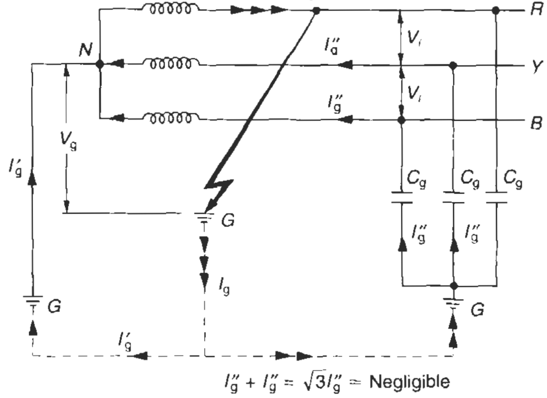

Figure 20.12 A solid neutral grounding system

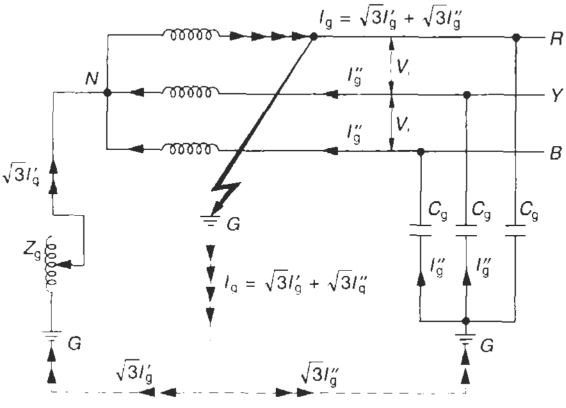

Z_g = Tapped reactor or arc suppression coil

Figure 20.13 An impedance grounding neutral system

If I''_g = fault current through the healthy phases due to ground capacitive reactance X_{cg}, then the current through the ground capacitive reactances

$$= \overline{I''_g} + \overline{I''_g}$$

$$= \sqrt{3} \cdot I''_g$$

And the total ground fault current

$$I_g = \sqrt{3} \cdot I'_g + \sqrt{3} \cdot I''_g$$

The value of I_g can thus be varied in magnitude and phase displacement to suit a particular location of installation or protective scheme by introducing suitable R and X_L into the neutral circuit. When the impedance is inductive, the fault current I'_g will also be inductive and will offset the ground capacitive current I''_g. In such a grounding, the main purpose is to offset the fault current as much as possible to immunize the system from the hazards of an arcing ground. This is achieved by providing an inductor coil, also known as an arc suppression coil, of a suitable value in the neutral circuit.

20.5 Arc suppression coil or ground fault neutralizer

This is also known as a Petersen coil, named after its inventor. With an inductive reactance, X_L, in the ground circuit the ground fault current can be substantially neutralized by tuning the inductor correctly. A small residual ground current however, will still flow through the ground circuit as a result of its own resistance, insulator leakage and corona effect. In all likelihood, it would be sufficient to operate the protective scheme. Since the fault current is now nearly in phase with the voltage of the healthy phases, it will prevent the interrupting device from causing a restrike while interrupting the fault (Section 17.7.2(iii)). Such an arrangement is more appropriate for systems that are above 15 kV and are subject to frequent ground faults, for example an overhead transmission line or a long distribution system.

With such a system the possibility of an arcing ground is almost eliminated and it is now possible even to allow the ground fault condition to prevail until it can be conveniently repaired. Now it will cause no harm to a human operator, supporting insulators or the terminal equipment. On long-distance transmission or distribution networks such a situation may rather be desirable to prevent the system from tripping instantly until at least the off-peak periods or until the supply is restored through an alternative source. The process of finding the fault and its repair may be allowed to take a little longer.

A neutral grounding reactor (NGR) is also desirable to achieve auto-reclosing of a faulty phase during a one-pole opening as a result of a fault of a transient nature on this phase (Section 17.4.1). The reactance grounding will limit the high unbalanced capacitive currents through the healthy phases to ground and prevent an unbalance and so also an unwanted trip as illustrated in Figure 20.14. Referring to Figure 20.14, a ground fault of a transient nature on phase B would cause the two line breakers b and b' to trip and result in heavy ground fault current through the capacitive coupling of the healthy phases, eventually also tripping the breakers of the healthy phases. The NGR would neutralize such currents and prevent an unwanted trip, achieve the desired auto reclosing and improve system stability. For such a situation to arise it is tuned to a zero p.f. to achieve a near-resonant condition so that the fault current, I_g, is almost zero, and the capacitive current is substantially offset by the power frequency inductor current, i.e.

$$X_L \approx \frac{X_{cg}}{3}$$

where the total ground capacitive reactance

$$= \frac{1}{\left(\frac{1}{X_{cg}} + \frac{1}{X_{cg}} + \frac{1}{X_{cg}}\right)} = \frac{X_{cg}}{3}$$

If L = inductor coil inductance in henry
C_g = ground capacitance per phase in farad and
f = system frequency in Hz

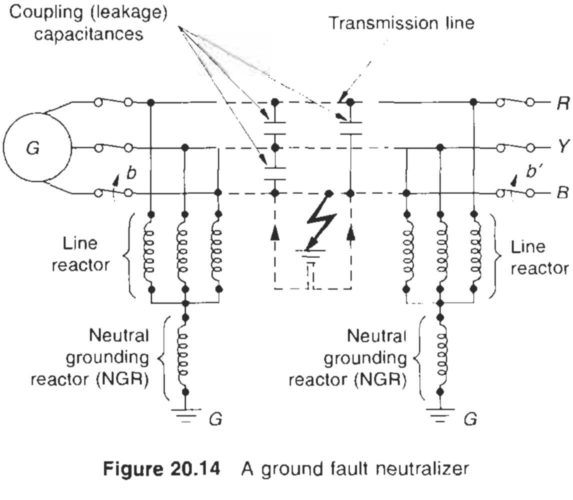

Figure 20.14 A ground fault neutralizer

then

$$2\pi \cdot f \cdot L \simeq \frac{1}{3(2\pi \cdot f \cdot C_g)}$$

$$\text{or } L \simeq \frac{1}{3(2\pi f)^2 \cdot C_g} \text{ henry} \qquad (20.4)$$

It is likely that for reasons of system disturbances, frequency fluctuations and switching of a few sections of the system, both X_L and X_{cg} may vary in actual operation and upset the resonance condition, leading to transient overvoltages. To overcome this, the inductor coil may be made variable (the setting of which may be altered automatically) through a motor-driven tap changer to achieve the tuning again. If the ground fault persists the inductor coil may be rated continuously rather than for a short time and for the full fault current that the coil may have to carry.

To overcome the generation of overvoltages across the inductor coil (Section 20.2.1(2)) its inductance, *L*, is generally selected high, so that the resonance condition with the ground capacitors, C_g, occurs near the natural frequency of the system (50 or 60 Hz) and the voltage developed across the inductor coil, V_g', may oscillate only at around $V_\ell/\sqrt{3}$. Generally, the Petersen coil neutralizer is a high-reactance grounding and is also termed resonant grounding, free from overvoltages and restrikes. Equating the voltages developed across the Petersen coil

$$V_g' = \frac{X_L}{X_{cg} - X_L} \cdot \frac{V_\ell}{\sqrt{3}} \leq \frac{V_\ell}{\sqrt{3}}$$

The voltage developed would thus oscillate around the normal voltage and fall in phase with the fault current to achieve a near-strike-free interruption of the interrupting device on a ground fault.

Note

1 As in IEC 60071-1,2a higher insulation level (BIL) will be necessary for all insulators and terminal equipment when the ground fault persists for more than 8 hours per 24 hours or a total of more than 125 hours during a year.

2 Because of likely de-tuning and generation of overvoltages, this system is seldom in practice.

Sometimes such a situation may arise on its own, even on a normally grounded system, not intended for ground current neutralizing. It can happen when an overhead line snaps due to a storm, winds or any other factor and falls on trees, hedges or dry metalled roads and remains energized in the absence of a proper return path and cause a low leakage current, insufficient to trip the protective circuit. This is a situation not really desirable on a normally grounded system, as it may lead to an ungrounded system and may develop overvoltages.

20.6 Ground fault factor (GFF)

This is an important indicator that shows the grounding condition of a system and helps to determine the most appropriate ground fault protective scheme as well as the insulation level for that system. It is defined as the ratio of the highest voltage to ground, V_g (r.m.s.), of the healthy phase or phases during a ground fault to the corresponding power frequency phase voltage $V_\ell/\sqrt{3}$ when the system was healthy. Refer to Figure 20.15.

$$\therefore \text{ Ground fault factor (GFF)} = \frac{V_g}{V_\ell/\sqrt{3}} \qquad (20.5)$$

which is usually more than 1.

It is also established that in an effectively grounded system the voltage to ground, V_g, of the healthy phases does not exceed 80% of the line-to-line voltage V_ℓ and consequently the GFF does not exceed $0.8 \times \sqrt{3}$, i.e. 1.4. The system may be considered as effectively grounded when

- $\frac{X_0}{X_+}$ = between 0 and 3, and
- $\frac{R_0}{X_+}$ = between 0 and 1

where

X_0 = zero sequence reactance
R_0 = zero sequence resistance
X_+ = positive sequence reactance

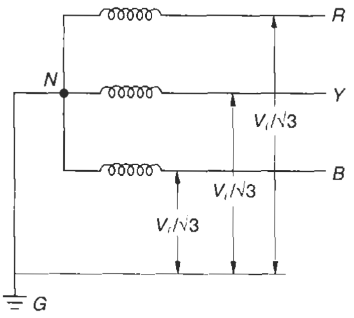

(a) Healthy system

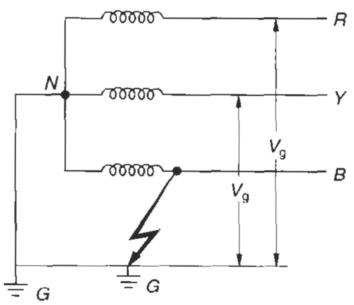

(b) Faulty system

R & *Y* – Healthy phases
B – Faulty phase
V_g – (rms) value of ground voltage measured on fault

Figure 20.15 Determining the ground fault factor

To achieve the desired conditions of grounding, the following are the generally adopted grounding practices.

20.6.1 An ungrounded or isolated neutral system

When the system is totally isolated from the ground circuit, except through indicating, measuring or protective devices, which are normally grounded and possess a high impedance to ground, the ground fault factor

$$\text{GFF} = \frac{V_\ell}{V_\ell/\sqrt{3}} = 1.732$$

This may become higher, depending upon the circuit's conditions (for example, the ferro-resonance effect, Section 20.2.1.2).

20.6.2 A grounded neutral system

When the system is grounded through its neutral, either solidly through a resistance or through an arc suppression coil (inductor), it becomes a grounded neutral system. This type of system grounding may be classified as follows:

- Effectively grounded
- Non-effectively grounded and
- Resonant grounded systems.

Effectively grounded system

This is to achieve a higher level of fault current to obtain a quicker tripping on fault. It is obtained when the system has a ground fault factor not exceeding 1.4 ($V_g \leq 0.8V_\ell$), as noted above. A solidly grounded system will provide effective grounding. This system will reduce the transient oscillations and allow a current sufficient to select a ground fault protection. It is normally applicable to an LT system.

Non-effectively grounded system

An impedance grounded system will fall into this category. The GFF may now exceed 1.4 ($V_g > 0.8V_\ell$).

Resonant grounded system

When the system is grounded through an arc suppression coil (reactor) so that during a single phase to ground fault, the power frequency inductive current passing through the inductor coil would almost offset the power frequency leakage capacitive component of the ground fault current. However, such a situation is not allowed to persist for more than 8 hours in any 24 hours or for a total of 125 hours during a year. If it is more, a higher level of insulation (BIL) will become necessary. The ground fault factor in this case may also exceed 1.4.

When the system parameters R_0, X_0 and X_1 are known, the value of GFF may be determined more accurately by the use of Figure 20.16, which has been established for different grounding conditions, i.e. for different values of R_0, X_0 and X_1.

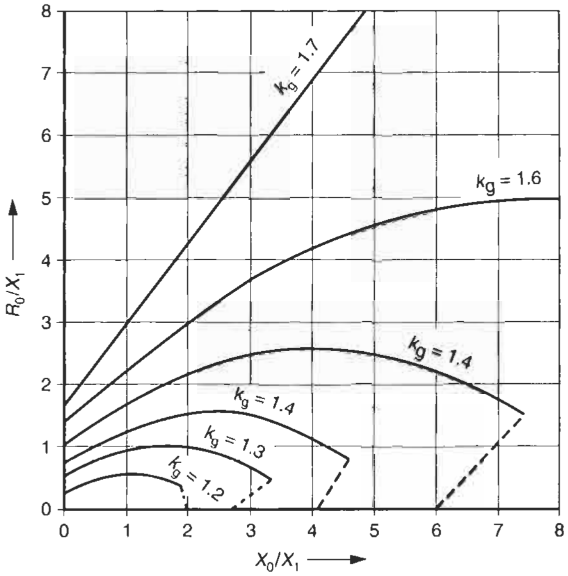

R_0 = Zero sequence resistance
X_0 = Zero sequence reactance
X_1 = Positive sequence reactance

Figure 20.16 Relationship between R_0/X_1 and X_0/X_1 to determine the values of ground fault factor k_g based on IEC

20.7 Magnitude of temporary overvoltages

At a particular location this can be obtained by multiplying the peak system phase to ground voltage by the ground fault factor at that location. For example, for a 6.6 kV nominal voltage system, having an isolated neutral (ungrounded system), the maximum temporary overvoltage during a ground fault may rise to

$$V_{\text{ph}}(\text{peak}) \times \text{GFF}$$

$$\text{where } V_{\text{ph}}\,(\text{peak}) = \sqrt{2} \times \frac{6.6}{\sqrt{3}}\,\text{kV} = 1\ \text{p.u.}$$

and GFF = $\sqrt{3}$ for an ungrounded system

$$\therefore \text{ Temporary overvoltage} = 1\ \text{p.u.} \times \sqrt{3}$$
$$= \sqrt{3}\ \text{p.u.}$$

20.8 Insulation coordination

For non-effectively grounded systems, having a GFF of more than 1.4, a higher level of insulation (BIL) will be essential for all equipment being used on the system to withstand a higher level of a one-minute power frequency voltage test as well as an impulse voltage withstand test if such levels (Lists I, II and III) are prescribed in the relevant standards. If not, then it may be assumed, that the prescribed test values take account of such an eventuality. Refer to Tables 11.6, 14.1, 32.1(A), 13.2 and 13.3 for more details.

20.9 Application of different types of grounding methods (for HT, HV and EHV* systems)

In the preceding paragraphs we have analysed the behaviour and characteristics of a system when grounded or left isolated. The ground fault factor (GFF) plays a very significant role in the selection of insulation level (BIL) and its coordination with the different equipment connected on the system. The application of a particular method of grounding would thus depend upon

- The ground protection scheme envisaged to decide on the magnitude of the ground fault current
- Criticality of the supply system, e.g. whether an immediate trip on fault is permissible
- Insulation level of the main equipment connected in the system.

The grounding of a generator, for instance, which may be designed for 6.6, 11, 15 or 21 kV, and all other equipment connected on this system may be solidly grounded to have the least GFF and hence, add no extra cost to the machine for a higher level of insulation or a larger size. On the other hand, at such voltages the ground fault current may also not be excessive to be of concern to cause an extra burden to the windings of the machine or in the selection of protective devices. It is, however, noted that a few application engineers may prefer an isolated neutral system at certain installations where continuity of supply is mandatory, even on a ground fault, until an alternative arrangement is made. Examples are auxiliary drives in a power generating unit or essential drives in a process plant. At such installations, it is imperative to ensure that the generator and all the equipment connected in the system are designed for the higher GFF and a larger size or greater cost of the machines are immaterial. But the occurrence of another ground fault before clearing the first will lead to fatality and cause total damage of the faulty equipment. The ground current can now find its way through the earlier ground fault and cannot be prevented, as there is no protection available. Isolated systems are therefore generally not recommended. Instead, for such require-ments, a resonance grounding system may be adopted, limiting the ground fault current to a desired low value to protect the machine from heavy fault currents and prevent the system from tripping on a ground fault. Such a system is more prevalent in overhead transmission or long-distribution networks to save the whole system from an outage on a ground fault.

The more recommended practice is to ground the neutral solidly or through an impedance, commensurate with the requirements of the protective scheme and the fault current limited to a desired level. The terminal equipment and the windings of all the machines may now be designed for a voltage corresponding to the relevant GFF.

20.9.1 Artificial neutral grounding of a three-phase three-wire system

In the previous section we have discussed the theory of providing a ground fault protection when a neutral was already available on the system. This could be utilized for a solid or an impedance grounding to achieve the required level of fault current on a ground fault, and meet the requirement of the protection scheme or the stability of the system. Here we discuss circuits which do not have a neutral as a matter of system design, such as for the purpose of transmission and long HT distribution, where the power is transmitted on a delta circuit to economize on the initial cost, such as from the generator to the generator transformer (Figure 13.15) where the generator is star and the transformer can be Y/Δ, say, 15.75/400 kV. In such a case, when grounding is required on the delta side of the transformer, this is possible by creating an artificial neutral point. The basic need for such a provision, where a neutral does not exist, may be necessary, primarily to achieve the following:

1. To reduce the high-voltage transient oscillations in an isolated neutral system and to prevent the voltage of the healthy phases from rising beyond their line to neutral voltage, as far as possible. Prolonged existence of overvoltages may have a tendency to cause a short-circuit from line to ground, even in the healthy phases.
2. A ground fault protection scheme that is easy to handle, clear the fault quickly and prevent it from spreading.
3. To eliminate prolonged arcing grounds as a matter of safety to human lives. A live conductor falling on ground will remain live if not grounded and cause an arcing through ground leakage capacitances. It may generate excessive heat and become a hazard to life and property.
4. On higher voltage systems, due to ground leakage capacitances, the voltage of the two healthy phases may increase to twice the voltage, similar to double charging, when switching a capacitor unit (Section 23.5.1).
5. Electrostatic induction may take place on overhead power-carrying systems, through charged clouds, dust, rain, fog and sleet and due to changes in the altitudes of lines. If these induced charges are not freed through grounding, they will continue to rise gradually and accumulate on the system. This is called floating potential and may result in a breakdown of the system insulation or the terminal equipment.

---

*1 We use HT for all voltage systems above 1.1 kV unless a comparative reference is necessary.

2 To identify the windings of a transformer, we use HV for the higher voltage and LV for the lower voltage side.

3 When we refer to a transmission system, we classify the different maximum voltage systems as follows:
HT – up to 66 kV
HV – above 66 to 245 kV and
EHV – above 245 kV.

If the above are not taken into account the devices and components used on the system may have to be selected or braced for a higher system voltage, say, up to twice the rated voltage or even more. The overvoltage condition may almost be the same as for ungrounded capacitor switching (Section 23.5.1(ii)).

Neutral grounding transformers

The artificial neutral point on the delta side can be created by providing an interconnected star neutral, also known as a zig-zag transformer. It can also be provided through a star–delta transformer. Both arrangements are illustrated in Figures 20.17 and 20.18 respectively. Such transformers are of a standard core type, with only a single winding on each transformer limb, split into two halves as shown. The total winding arrangement is like a 1:1 auto-transformer, with the provision of altering the ground impedance, similar to that in a normal ground circuit, as discussed above. The additional resistance or impedance, as required in the ground circuit, may be provided either by inserting it between the neutral point and the ground or in the three individual phases as shown in Figures 20.17 and 20.18.

The rating of the auxiliary transformer can be short-time, sufficient to feed the fault current and its own no-load losses for, say, 30 seconds or so, according to the maximum tripping time of the protective scheme. The normal rating of such transformers is generally between 5 and 100 kVA, sufficient to carry the full ground fault current. The winding is designed for line-to-line system voltage.

Note
The magnetic core is designed so that it will not saturate during normal operation to avoid a ferro-resonance condition. The knee point voltage is kept at about 1.3 times the system line voltage.

Residual voltage transformer (star/open delta transformer)

This is not a method of providing an artificial neutral, as in the previous case, but to detect an unbalance or residual voltage (zero sequence voltage) in a three-phase three-wire or a three-phase four-wire ungrounded system. The residual or zero sequence voltage that may appear across the open delta will be the reflection of an unbalance or a ground fault in the system (Figure 20.10). Also refer to Section 15.4.1 for more details.

20.10 Important parameters for selecting a ground fault protection scheme

1 Single-phase loads or unevenly distributed loads on a balanced three-phase system do not lead to a faulty condition as a result of unbalanced currents. The single-phase load currents will always have the return path through the neutral and not the ground. The current through the ground circuit will flow only when there is a ground fault and the circuit completes through the ground loop. Refer to Figures 20.19(a) and (b).

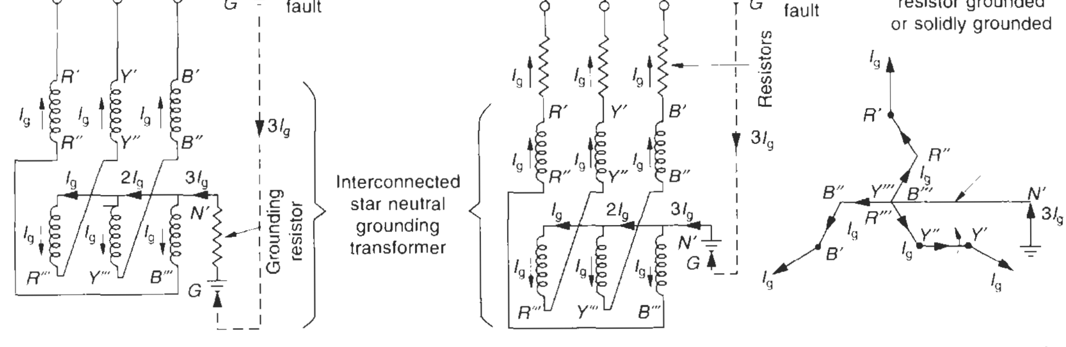

(a) Current-limiting resistor in neutral

(b) Current-limiting resistors in line

(c) Phasor representation of the grounding transformer

Figure 20.17 3ϕ interconnected star-neutral grounding transformer

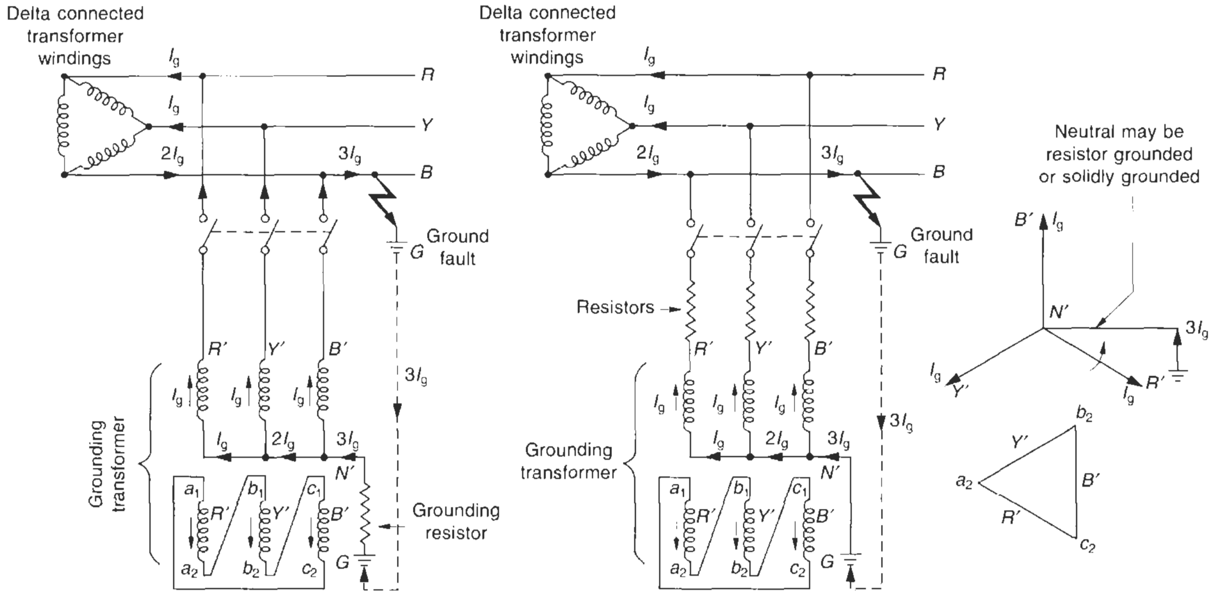

(a) Current-limiting resistor in neutral

(b) Current-limiting resistors in line

(c) Phasor representation of the grounding transformer.

Figure 20.18 3ϕ Star/delta neutral grounding transformer

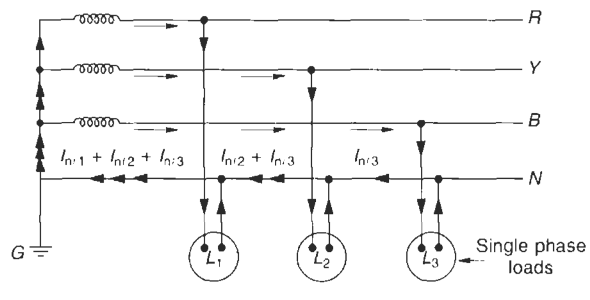

(a) Healthy system

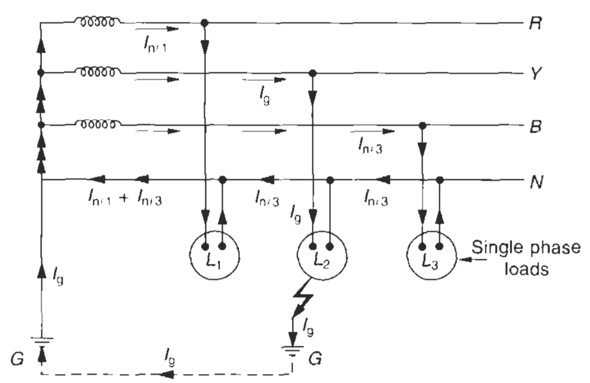

(b) Faulty system

Figure 20.19 In a healthy system the unbalanced current (other than a ground fault or phase to phase and ground fault) will flow through the neutral and not the ground

2 The magnitude of the ground fault current is a matter of system design and will largely depend upon the system voltage and the ground loop impedance, as discussed above. The theory of grounding protection, however, is different for an LT and an HT system. While an LT system will require a reasonably high ground fault current and thus a low ground circuit impedance to detect the fault promptly, an HT system must have as low a ground leakage current as possible to avoid a dangerous potential gradient at any point on the ground loop and the ground (step and touch voltages, Section 22.9) and to eliminate the danger to a human coming into contact with it and also to prevent arcing grounds. HT systems as standard practice are therefore designed to have a high ground circuit impedance.

3 The required ground impedance may be determined on the following lines, if

kVA = rated capacity of the supply source, which can be a generator or a transformer
V_ℓ = system rated line voltage in volts
I_r = system rated full-load line current in amperes
Z_g = impedance of the grounded neutral circuit in ohms
I_g = required level of the ground fault current in amperes

Then

$$Z_g = \frac{V_\ell}{\sqrt{3}\cdot I_g}\ \Omega$$

and $I_r = \dfrac{1000\cdot \text{kVa}}{\sqrt{3}\cdot V_\ell}$ Amp

I_g is generally defined in terms of I_r, such as 10–40% or 20–80% of I_r, depending upon the protection scheme. If I_g is, say, n in units of I_r then

$$Z_g = \frac{V_l \cdot \sqrt{3} \cdot V_l}{\sqrt{3} \cdot n \cdot 1000 \cdot \text{kVA}}$$

$$\text{or} \quad Z_g = \frac{V_l^2}{n \cdot 1000 \cdot \text{kVA}}\,\Omega \qquad (20.6)$$

From this equation one can determine the required value of neutral circuit impedance for a particular level of ground fault current. The external impedance will be Z_g, less the ground impedance. In HT systems one can also determine the likely value of a ground inductor coil to achieve a near-resonance condition, to eliminate the arcing grounds, on the one hand, and facilitate a strike-free extinction of an arc by the interrupting device, on the other.

Example 20.1

For a 1600 kVA, 11/0.415 kV transformer, considering the LT side:

$$Z_g = \frac{(0{\cdot}415)^2 \times 1000^2}{n \times 1000 \times 1600}\,\Omega$$

For an industrial power distribution network, if the setting of the protection relay is considered to be 20% of I_r then

$$Z_g = \frac{(0{\cdot}415)^2 \times 1000^2}{0.2 \times 1000 \times 1600}\,\Omega$$

$$\simeq 0.54\,\Omega$$

The natural zero phase sequence inductive reactance of the grounded neutral may be considered to be too small compared to this and ignored for ease of calculations. Thus the resistance R_0 of the grounded neutral circuit may be considered as its impedance, i.e.

$$I_g \simeq \frac{0.415 \times 1000}{\sqrt{3} \times 0.54}$$

$$\simeq 444 \text{ Amps}$$

The impedance calculated thus will form the basis of determining the adequacy of the grounding stations provided. Probably, for such a low value of grounded neutral impedance the grounding stations may have to be more elaborate and greater in numbers (arranged in parallel). This is to ensure that at no stage will the impedance of the system increase beyond 0.54 Ω (inclusive of the impedance of the ground). Otherwise it will render the protective scheme ineffective and allow the ground fault to persist.

The above is the case for an LT system. For an HT system, similar calculations may be carried out to determine the ground neutral impedance. Now it will be much higher than the above due to a high V_g to limit the fault current and thus also the ground potential difference to below a dangerous level at any point on the ground circuit. The impedance of the ground circuit in such cases may be increased through a resistance or an inductor coil.

20.10.1 Grounding of generators

Solid grounding

Generators that are solidly grounded have a different grounding practice from others due to their zero phase sequence reactance, which is much less than its positive or negative phase sequence reactances (Section 13.4.1(5)) and Table 13.6). As a result, the ground fault current in a generator circuit is greater than its three-phase symmetrical fault current. This current rises further when all of them are individually grounded and more than one unit are running in parallel at a time. It is worth mentioning that when two or more generators are running in parallel and all of them are grounded, they form a closed circuit to cause circulating currents. This may occur even in a healthy system due to unbalance, not because of single-phase loads but unequal generator phase currents due to eddy currents. These are important aspects and must be considered while deciding on the grounding method of a solidly grounded generator. Consider Figure 20.20, illustrating four identical generators operating in parallel. Each has the following reactances:

positive phase sequence instant p.u. (sub-transient) reactance = x''_d

negative phase sequence p.u. reactance $= x_2$

zero phase sequence p.u. reactance $= x_0$

∴ Total p.u. reactance of the ground circuit

$$x = x''_d + x_2 + x_0$$

For the sake of illustration, consider the values of these reactances as in Example 13.4:

$$x''_d = 11.7\%$$

$$x_2 = 8.8\%$$

$$x_0 = 4.0\%$$

The instant (sub-transient) fault current, I_{SSC}, through a generator in a symmetrical three-phase system, irrespective of the condition of neutral as defined in Table 13.9 will be

$$I_{SSC}\,(3\text{–}\phi \text{ fault peak value}) = \frac{v}{x''_d}$$

where v = p.u. voltage

$$\text{for } x''_d = 11.7\%,\ I_{SSC} = \frac{v}{0.117} \text{ or } 8.55\ v$$

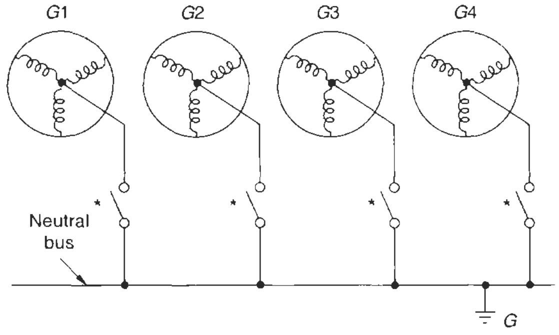

Impedance of each machine Z_1, Z_2, Z_0

* Neutral grounding switches (only one to be 'ON' at a time)

Figure 20.20 Recommended neutral grounding of generators

$$\text{and } I_{SSC} \text{ (phase-to-phase fault)} = \frac{\sqrt{3}\cdot v}{x_d'' + x_2}$$

$$= \frac{\sqrt{3}\cdot v}{0.117 + 0.088}$$

$$= 8.45v$$

If there is more than one generator operating in parallel, when the fault occurs, the reactances of all such machines will fall in parallel and diminish the effective reactance of the faulty circuit and enhance the fault current. For instance, when all four machines are operating in parallel, the effective reactance will become

$$x_{de}'' = \frac{x_d''}{4}\left(\frac{1}{x_{de}''} = \frac{1}{x_d''} + \frac{1}{x_d''} + \frac{1}{x_d''} + \frac{1}{x_d''}\right)$$

and the enhanced fault current

$$I_{SSC}' = \frac{v}{x_d''/4} = \frac{4v}{x_d''}$$

i.e. 4 × 8.55v or 34.2v

Generalizing the above, the symmetrical fault current, when n number of machines are operating in parallel,

$$I_{SSC} = \frac{v}{x_d''}\cdot n$$

This is irrespective of whether the generator neutral is isolated or solidly grounded, and if grounded, whether operating singly or in parallel, whereas the ground fault, when the generators are grounded but only one machine is operating at a time,

$$I_g = \frac{3v}{x} = \frac{3\cdot v}{x_d'' + x_2 + x_0} \qquad \text{(Table 13.9)}$$

and for the values of reactances considered;

$$I_g = \frac{3v}{0.117 + 0.088 + 0.04}$$

$$= 12.24v$$

(which is much higher than 8.55v on a symmetrical three-phase fault). When more than one machine are operating in parallel at a time and all of them are individually grounded, the effective reactances for n number of machines will be

$$x_{de}'' = \frac{x_d''}{n}$$

$$x_{2e} = \frac{x_2}{n}$$

$$x_{oe} = \frac{x_0}{n}$$

Reactances with the suffix 'e' denote the equivalent reactances when all the machines are grounded and running in parallel

$$\text{and } x_e = \frac{1}{n}(x_d'' + x_2 + x_0)$$

and the new fault current will be

$$I_g' = \frac{3v}{x_e}$$

$$= \frac{3v}{x_d'' + x_2 + x_o}\cdot n \qquad (20.7)$$

and for the impedances assumed, when all the four machines are running in parallel

$$= 12.24 \times 4v$$

or 48.96v (as against 34.2v on a symmetrical three-phase fault).

The ground fault circulating current is now as many times more, as many grounded machines will be operating in parallel. Such high ground fault currents may cause disturbance in the supply system and severely damage the machines. This can be reduced by grounding just one machine at a time, as illustrated in Figure 20.20, and adopting the normal protective scheme. Equation (20.7) will now be modified to

$$I_g'' = \frac{3v}{x_e'}$$

where $x_{de_1}'' = \dfrac{x_d''}{n}$

$x_{2e_1} = \dfrac{x_2}{n}$

and $x_{0e_1} = x_0$

Reactances with the suffix 'e_1' denote the equivalent reactances when all the machines are running in parallel, but neutral if only one machine is grounded at a time.

$$\therefore I_g'' = \frac{3v}{\frac{x_d''}{n} + \frac{x_2}{n} + x_0} \qquad (20.8)$$

For the reactances assumed, when all the four machines are running in parallel

$$I_g'' = \frac{3v}{\frac{0.117}{4} + \frac{0.088}{4} + .04}$$

$$= 32.88v$$

which is much less than before and even less than the three-phase symmetrical fault current. To restrict the ground fault current, when more than one generator are operating in parallel it is advisable to ground only one machine at a time. Although provision must be made for all the machines for grounding, so that when one or more machines are out of service, one of those in service may be grounded. To achieve this, all the neutrals may be connected to a common neutral bus through individual neutral grounding switches as shown in Figure 20.20, and the common neutral grounded solidly.

Impedance grounding

The above problem can also be overcome by impedance grounding rather than solid grounding. It can be a resistance *R* or inductance *L* or both, as discussed above. In the present case, if we consider a p.u. resistance r of just 9% in every neutral, the improved ground fault current will become as follows when all the four generators are grounded and are operating in parallel and one of them develops a ground fault:

$$I''_{\mathrm{g}} = \frac{3v}{\bar{x}''_{\mathrm{d}} + \bar{x}_2 + \bar{x}_0 + 3r} \times 4$$

$$= \frac{4 \times 3v}{J(0.117 + 0.088 + 0.04) + 3 \times 0.09}$$

$$= \frac{4 \times 3v}{0.27 + J0.245}$$

$$= \frac{4 \times 3v}{0.365}$$

or $32.88v$

This is less than the corresponding symmetrical fault current of $34.2v$ and incidentally equal to the ground fault current when only one machine is grounded at a time. By this method, the ground fault current can be controlled to any desired level. We have considered a resistance with a view to improving the p.f. of the fault current and thus, making it easier to interrupt.

Level of ground fault current for large generators

Manufacturers of large generators, 200 MW and above, recommend the ground fault current, I_{g} to be limited in the range of 5–15 A and a fault clearing time of the order of 5–30 seconds to protect the machine and avoid overheating of the grounded steel frame. It is also recommended to limit the TRV by inserting a small resistance into the grounding circuit to make the ground fault current (I_{g}) somewhat resistive than capacitive due to capacitive coupling between the generator and the associated equipment and the ground as illustrated in Figure 20.21. To achieve this, the ground fault loss represented by $I_{\mathrm{gr}}^2 R$ (I_{gr} being the active current and R the ground resistance) should be higher than the electrostatic loss to ground, as explained in Example 20.2.

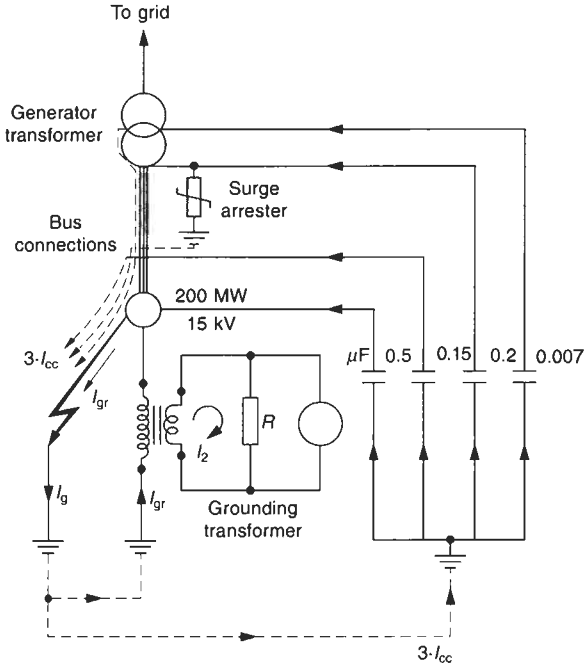

I_{cc} – Ground and other leakage currents per phase.
I_{gr} – Ground fault current through the generator
R – Secondary grounding resistance

Figure 20.21 Grounding method and flow of ground fault current in a generator on a ground fault (Example 20.2)

Since a reactor can only offset or over-compensate the capacitive kVA, it will not yield the same result as a resistance. Resistance grounding is therefore preferred to reactance grounding. The GFF, however, will now be higher and may rise to $\sqrt{3}$ times. The phase to neutral voltage in the healthy phases may rise to the line voltage during a ground fault, as in an isolated neutral system. Machine insulation and all equipment and devices associated with the machine must take care of this. The low-resistance grounding may be achieved through a distribution transformer, with a low resistance on the secondary side, as shown in Figure 20.21.

Example 20.2
To determine the grounding parameters, consider a generator rated for 200 MW, 15 kV and the ground fault current limited to 15 A. Considering GFF as $\sqrt{3}$, the voltage ratio of the grounding transformer with a 220 V secondary will be

$$\frac{15}{\sqrt{3}} \cdot \sqrt{3}\ \mathrm{kV{:}220\ V}$$

or 15 kV : 220 V

Consider safe I_{gr} as 10 A.

1. Electrostatic kVA
Consider the following ground and other leakage capacitances for the sake of reference:

Generator to ground = 0.5 μF
Generator bus duct to ground = 0.15 μF
Low-voltage winding of GT to ground = 0.007 μF
Surge capacitance = 0.2 μF
∴ Total coupling capacitance = 0.857 μF
and coupling reactance

$$X_{\mathrm{cg}} = \frac{1}{2\pi \times 50 \times 0.857 \times 10^{-6}} \quad \text{(for a 50 Hz system)}$$

$$\simeq 3.72 \times 10^3\ \Omega$$

and coupling current $I_{\mathrm{CC}} = \dfrac{15\,000}{\sqrt{3} \times 3.72 \times 10^3}$

$$\simeq 2.33\ \text{A/per phase}$$

$$3 \cdot I_{\mathrm{CC}} \simeq 6.99\ \text{A for three phases}$$

and electrostatic kVA

$$= \frac{15}{\sqrt{3}} \times 6.99$$

$$= 60.53\ \text{kVAr}$$

2. Ground fault loss
Secondary current on fault

$$V_1 \cdot I_1 = V_2 \cdot I_2$$

$$\sqrt{3} \cdot \frac{15}{\sqrt{3}} \times 10^3 \times 10 = 220 \cdot I_2$$

$$\therefore \qquad I_2 = 682 \text{ A}$$

and required secondary resistance

$$R = \frac{220}{682}$$

$$= 0.32\ \Omega$$

$$\therefore\ I_{gr}^2 \cdot R = (682)^2 \times 0.32$$

$$= 148.8 \text{ kVA}$$

$$\therefore I_{gr}^2 \cdot R >> \text{kVAr}$$

and actual current at the point of fault

$$I_g = \sqrt{10^2 + (2.33 \times 3)^2}$$

$$= 12.2 \text{ A}$$

This is illustrated by a phasor diagram in Figure 20.22.

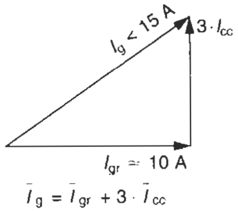

Figure 20.22 Phasor diagram for the ground fault current of Example 20.2

3. Rating of transformer

$$= 15 \times 10^3 \times 10 \text{ VA}$$

$$= 150 \text{ kVA, 15 kV/220 V}$$

Short-time rating 5–10 minutes, although the relay will trip much earlier.

Relevant Standards

IEC	*Title*	*IS*	*BS*
60071-1/1993	Insulation coordination – Definitions, principles and rules	2165-1/1991 2165-2/1991	BS EN 60071-1/1996
60071-2/1996	Insulation coordination – Application guide	3716/1991	BS EN 60071-2/1997
	Relevant US standards ANSI/NEMA and IEEE		
ANSI/IEEE 1313.1/1996	Insulation coordination, definitions, Principles and Rules		

Notes

1 In the tables of Relevant Standards in this book while the latest editions of the standards are provided, it is possible that revised editions have become available. With the advances of technology and/or its application, the updating of standards is a continuous process by different standards organizations. It is therefore advisable that for more authentic references, readers should consult the relevant organizations for the latest version of a standard.

2 Some of the BS or IS standards mentioned against IEC may not be identical.

3 The year noted against each standard may also refer to the year of its last amendment and not necessarily the year of publication.

List of formulae used

Analysis of an ungrounded system

When the external impedance is resistive

$$V'_{g(max)} = \sqrt{\frac{R}{R^2 + X_{cg}^2}} \cdot \sqrt{2} \cdot V_l \qquad (20.1)$$

V'_g = voltage across the external resistance R

R = external resistance

X_{cg} = ground capacitive reactance

V_ℓ = line voltage

When the external impedance is capacitive

$$V'_{g\,max} = \frac{X_c}{X_c + X_{cg}} \cdot \sqrt{2} V_l \qquad (20.2)$$

V'_g = voltage across X_c

X_c = external capacitive reactance

When the external impedance is inductive

$$V'_{g\,max} = \frac{X_L}{X_{cg} - X_L} \cdot \sqrt{2}\ V_\ell \qquad (20.3)$$

X_L = external reactance

Arc suppression coil or ground fault neutralizer

To substantially offset the capacitive current by the power frequency inductor current

$$L \approx \frac{1}{3(2\pi f)^2 \cdot C_\mathrm{g}} \text{ henry} \tag{20.4}$$

L = inductor coil inductance in henry
C_g = ground capacitance per phase in farad and
f = system frequency in Hz

Ground fault factor

$$\mathrm{GFF} = \frac{V_\mathrm{g}}{V_\mathrm{l}/\sqrt{3}} \tag{20.5}$$

V_g = highest voltage to ground (r.m.s)

Selecting a ground fault protection scheme

$$Z_\mathrm{g} = \frac{V_\mathrm{l}^2}{n \cdot 1000 \cdot \mathrm{kVA}}\ \Omega \tag{20.6}$$

kVA = rated capacity of the supply source
V_l = system rated line voltage in volts
I_r = system rated full load line current in Amperes
n = unit of I_r
Z_g = impedance of the grounded neutral circuit in Ohms
I_g = required level of the ground fault current in Amperes

Grounding of generators

(i) When all the machines are individually grounded

$$I_\mathrm{g}' = \frac{3\upsilon}{x_\mathrm{d}'' + x_2 + x_0} \cdot n \tag{20.7}$$

υ = p.u. voltage of generator
x_d'' = positive phase sequence p.u. (sub transient) reactance
x_2 = negative phase sequence p.u. reactance

(ii) When only one machine is grounded at a time

$$I_\mathrm{g}'' = \frac{3\upsilon}{\frac{x_\mathrm{d}''}{n} + \frac{x_2}{n} + x_0} \tag{20.8}$$

x_0 = zero phase sequence p.u. reactance
n = no. of machines operating in parallel

Further reading

Kaufmann, R.H. and Halberg, M. M., 'System overvoltages, causes and protective measures'.

Lythall, R.T., *The J & P Switchgear Book*, Butterworths (on balanced and unbalanced components).

21

Grounding Theory and Ground Fault Protection Schemes

Contents

21.1 Protection of a domestic or an industrial single-phase system

21.1.1 Effects of current passing through a human body and the body's tolerable limits

An electric current, rather than voltage, through a human body may cause shock and can damage vital organs of the body as follows:

1. It may cause muscular contraction, unconsciousness, fibrillation of the heart, respiratory nerve blockage and burning. These are all functions of body weight. The muscular contraction makes it difficult to release an energized object if held by the hand and can also make the breathing difficult. The heart, being the most vulnerable organ of a human body, is damaged most, mainly by ventricular fibrillation, which may result in an immediate arrest of the blood circulation (electrocution). In Table 21.1 we provide likely intensities of body currents when lasting for more than a heart beat (nearly 60–300 ms or 3–15 cycles for a 50 Hz system).
2. It is generally seen that a human body can sustain a much higher current at a lightning or switching frequency (5 kHz or above) due to the extremely short duration of such surges (30 μs or less).

The current can pass through the heart, when the current passes through hand to hand, or through one hand and a foot. Current flowing between one foot to the other may not be considered dangerous, but may cause muscular contraction and pain. The subsequent body fall, if it occurs, may, however, be fatal as now the current can also flow through the hand involving the heart. Ground fault protection emphasizes keeping the fault current below the fibrillation threshold and for a period of less than a heart beat, in the range of 60–300 ms. It has been established that the electric shock energy which a human body can endure, without damage has a relationship with the leakage current through the body and its duration, i.e.

$$S_b = I_b^2 \cdot t_b$$

or $$I_b = \sqrt{\frac{S_b}{t_b}} \qquad (21.1)$$

where

S_b = shock energy in watt-seconds (Ws)

I_b = r.m.s value of the leakage current through the body in Amperes (A)

t_b = duration of leakage current in seconds (s)

The energy, S_b, for a 50 kg body is regarded safe at 0.0135 Ws and for a 70 kg body at 0.0246 Ws

$$\therefore \quad I_b(50\text{ kg}) = \sqrt{\frac{0.0135}{t_b}} = \frac{0.116}{\sqrt{t_b}} \qquad (21.2)$$

$$\text{and } I_b(70\text{ kg}) = \sqrt{\frac{0.0246}{t_b}} = \frac{0.157}{\sqrt{t_b}} \qquad (21.3)$$

Figure 21.1 as in IEC 60479-1 illustrates the various zones of ground leakage current versus duration of fault and its effect on a human body.

To enable the body to sustain a high fault current it is essential that the fault interrupting device (relay or release) is quick responding. For domestic applications, it is recommended to be less than a heart beat.

Note
Prevention from ground leakage as such is important, as it causes corrosion through electrolysis and may damage the insulation of wires due to ageing.

Table 21.1 Likely intensities of body currents when lasting for more than a heart beat (≃ 60–300 ms)

Sr. no.	*Body current (mA)*	*At frequency (Hz)*	*Intensity*
1	100	50–60	Lethal
2	100	3–10 kHz	Tolerable (because of extremely short duration)
3	60–100	50–60	Fatal
4	16–60	50–60	Breathing may become difficult due to muscular contraction
5	10–16	50–60	It is the let-go current and makes it hard to release an energized object if held by hand
6	5–9	50–60	No dangerous effects
7	1–4	50–60	Threshold of sensation

21.1.2 Use of ground leakage circuit breakers (GLCBs)*

It is likely that smaller installations, such as a domestic light or power distribution network, and single-phase industrial or light loads may not always meet the requirements, as discussed in Section 21.2, Table 21.2, due to the circuit's own high impedance (other than the impedance of the ground conductors). It is therefore possible that the fuses, if provided for the short-circuit protection of the system, may be too large to detect a ground leakage. The ground leakage circuit breakers (GLCBs) provide an effective solution to this problem and are easily available and extensively used. They are extremely sensitive to very feeble ground leakages, of the order of 10 mA or more, and trip the faulty circuit within a safe period on the smallest leakage current and provide effective protection to the human body. Figure 21.2 illustrates the tripping scheme for such a breaker and the principle of operation is discussed below. Normally two types of GLCBs are in use, i.e. 30 mA and 300 mA.

---

*More commonly known as earth leakage circuit breakers (ELCBs) or residual current circuit breakers (RCCBs). They operate on the principle of residual current.

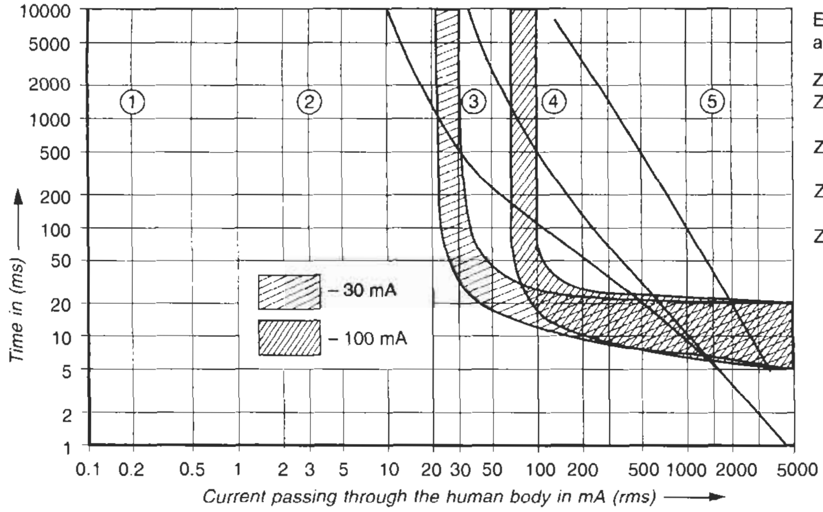

Effects of A.C currents (50 Hz) on a person at least 50 kg in weight.

Zone-1 – Usually no reaction
Zone-2 – Usually no dangerous physiological effect
Zone-3 – Usually no danger of heart failure (ventricular fibrillation)
Zone-4 – Probability of heart failure up to 50%
Zone-5 – Probability of heart failure more than 50%.

Figure 21.1 EffeCcts of current leakage through a human body

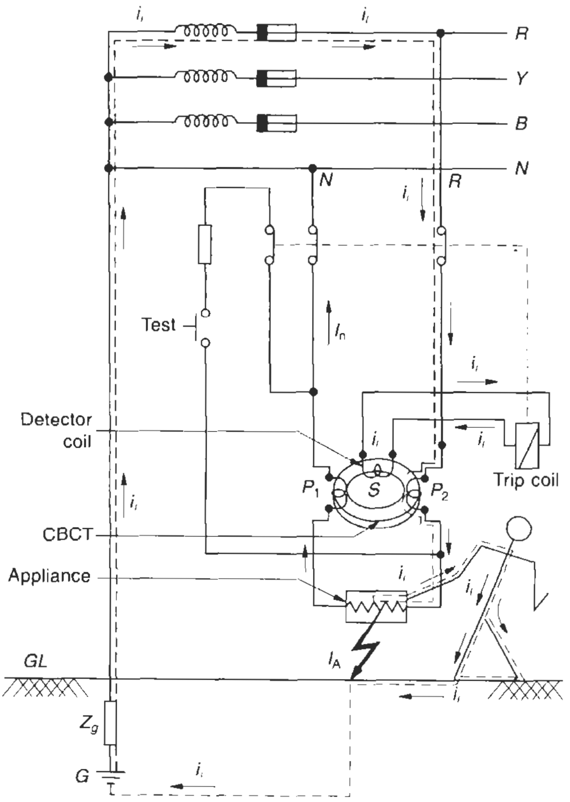

Z_g – Ground fault loop impedance
I_A – Leakage current through the appliance. But for simplicity the whole current is considered through the body only
i_l – Leakage current through the human body
* – Test button to check periodically the operation of the ELCB

Figure 21.2(a) Schematic drawing of an ELCB

The former is to protect the human body from shocks and electrocution, while the latter protects the circuit from fire risk. Normally the 300 mA GLCB is used as the incomer and 30 mA as the outgoing for the individual feeding circuits.

21.1.3 Principle of operation of a ground leakage circuit breaker (application of a core-balanced CT)

Refer to Figure 21.2 showing a single-phase circuit breaker having a thermal overcurrent and a magnetic short-circuit element, OCR. A core-balanced transformer is arranged in the circuit as shown. When the system is healthy, the current through the phase, I_R, and the neutral, I_n, will be equal and the magnetic effect of the load current on the primary windings, P_1 and P_2, will be almost zero. In the event of a ground leakage, I_f, this balance is disturbed and some of the leakage current will also flow through one of the primary windings of this core-balanced CT, as shown in the circuit. This will cause a magnetic flux in the core, inducing a voltage in the secondary winding S. In the circuit shown, it feeds a rectifier circuit provided on the secondary side of the circuit. This unit facilitates a direct current flow through the leakage trip coil, which trips the breaker. These breakers are extremely fast operating on fault (operating time may be less than 5 ms), and have a low let-through energy. Refer to $I^2 - t$ characteristics (Figure 21.1). The ground fault current will also be comprised of a current through the appliance, I_A (Figure 21.2). But since the basic purpose of this device is to protect the human body from an electric shock or electrocution, we have considered the leakage current, I_f, through the body alone to be safer. To ensure total safety, the device should be able to detect this leakage, assuming there was no ground current through the appliance. When the device will be able to do so, the circuit in any case will be protected.

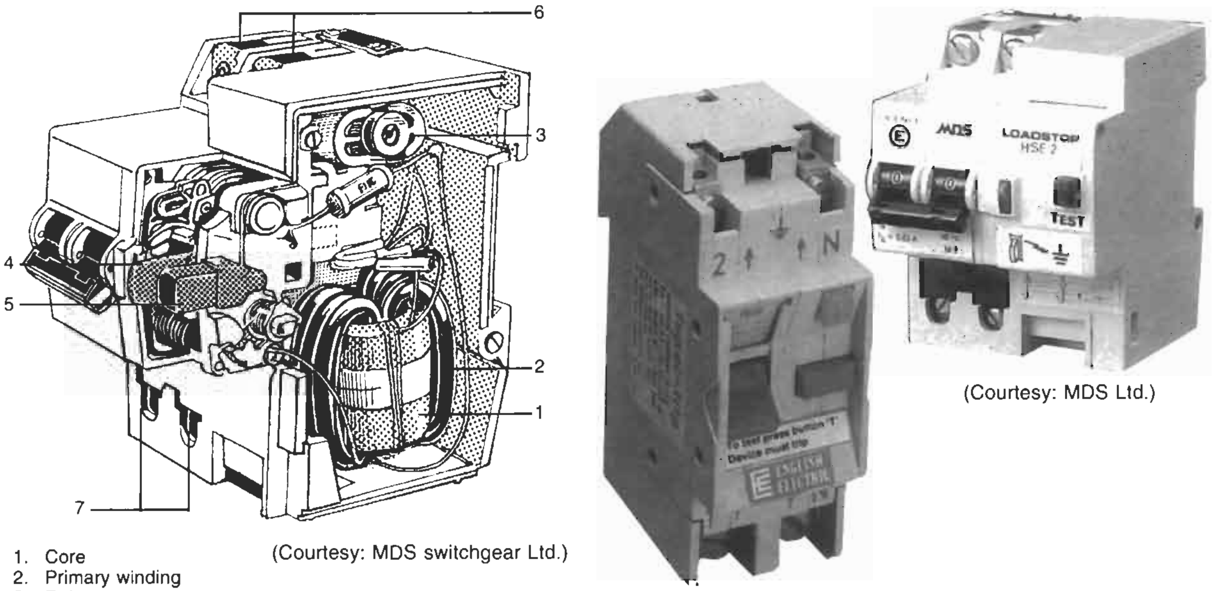

1. Core
2. Primary winding
3. Relay
4. Ground fault indicator
5. Test button tripping
6. Outgoing terminal ⎤ they can be interchanged
7. Incoming terminal ⎦

(Courtesy: MDS switchgear Ltd.)

(Courtesy: English Electric)

(Courtesy: MDS Ltd.)

Figure 21.2(b) Two-pole ground leakage circuit breakers (ELCBs or GLCBs)

21.2 Ground fault on an LT system

21.2.1 System protected through over current releases and HRC fuses

The value of ground loop impedance is always predetermined, depending upon the system requirement and the type of protection available to the system, its accuracy to detect the fault and time to operate. For systems protected through overcurrent releases or HRC fuses only, the ground loop must have a comparatively low impedance. It will allow a high ground fault current through the faulty circuit, sufficient to trip the over current-cum-short-circuit releases of the breaker if the circuit is protected through such releases of the breaker or blow out the HRC fuses, if the circuit is protected through HRC fuses. Such a requirement is more desirable for higher rating systems, where discrimination between a healthy and a faulty condition by such devices may be difficult. Medium-rating systems may cause a relatively much higher fault current and be automatically protected, as the normal ground fault current would be sufficient to trip the short-circuit releases or blow out the HRC fuses.

The rule of thumb to determine the ground loop impedance is to consider the ground fault current as one and a half times that of the overcurrent setting of the circuit breaker for breaker-controlled systems (a fault condition for a breaker) or three times the rating of the fuses, for fuse-protected systems (an overcurrent condition for the fuses). Based on this rule, Table 21.2 suggests the optimum values of ground loop impedances for circuits of different current ratings for an LT system. At these values of currents, the overcurrent releases will trip in about 130–370 seconds. Refer to '$I^2 - t$' characteristic curves of such releases as shown in Figure 21.3. The HRC fuses will blow out in about 40/60 seconds. Refer to '$I^2 - t$' characteristic curves of fuses, as shown in Figure 21.4.

Table 21.2 Maximum impedances of ground loop, when protected by overcurrent releases of circuit breakers or fuses

Current rating of circuit fuse 'a' *Amp*	*Overcurrent of the circuit breaker MCCB or ACB* 'b' *Amp*	*Maximum desirable impedance of ground fault loop on a 240 V circuit* $(415/\sqrt{3})$ $Z_g = \frac{240}{3a \text{ or } 1.5b}$ Ω
5	10	16
10	20	8
15	30	5.3
20	40	4
30	60	2.7
40	80	2
60	120	1.33
80	160	1
100	200	0.8
125	250	0.64
150	300	0.53
175	350	0.46
200	400	0.4
300	600	0.27
400 etc.	800 etc.	0.2

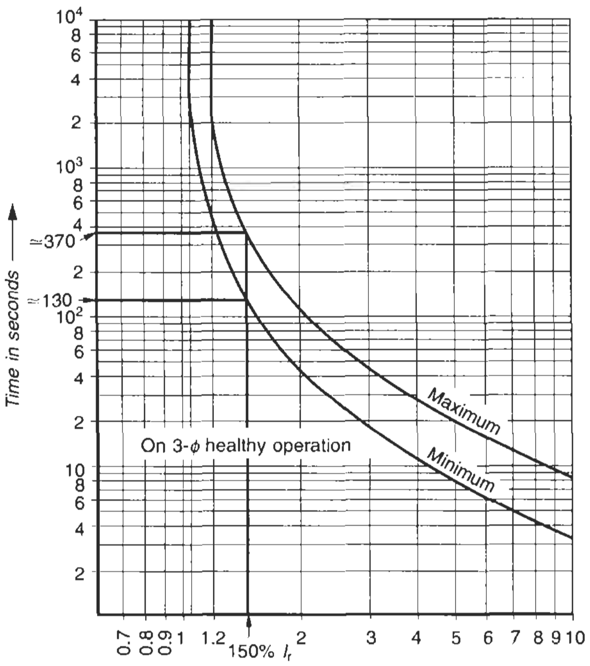

Figure 21.3 I^2–t characteristics of an OCR (Figure 12.13(a), reproduced for illustration) (Courtesy: L & T)

Note

Ground fault protection through overcurrent releases or HRC fuses is not a reliable practice. It requires a very low ground circuit resistance to maintain a high ground fault current, which may not be possible in the long run. As a consequence, in certain cases the system may remain intact on a ground fault and damage the healthy circuits. It is therefore good practice to provide a ground leakage MCB, ground leakage MCCB or a conventional MCCB with a CBCT and a ground fault leakage relay for low-rating incoming feeders.

For domestic light and power distribution this practice is common. Modern industrial installations can now adopt a fuseless system and use MCCBs and provide a more sensitive ground leakage protection scheme for more safety and reliability.

21.2.2 System protected through relays

A system protected through a separate ground fault relay will require a different concept from that discussed above. A relay can be

- Electro-magnetic (being quickly outdated)
- Static, based on discrete ICs or
- Solid-state microprocessor based.

The relay is very sensitive and quick responding and can reliably actuate at low leakage currents (0.1 A or less). It is therefore operated through the secondary of a CT (1 or 5 A), provided in the ground circuit. Figures 21.5(a) and

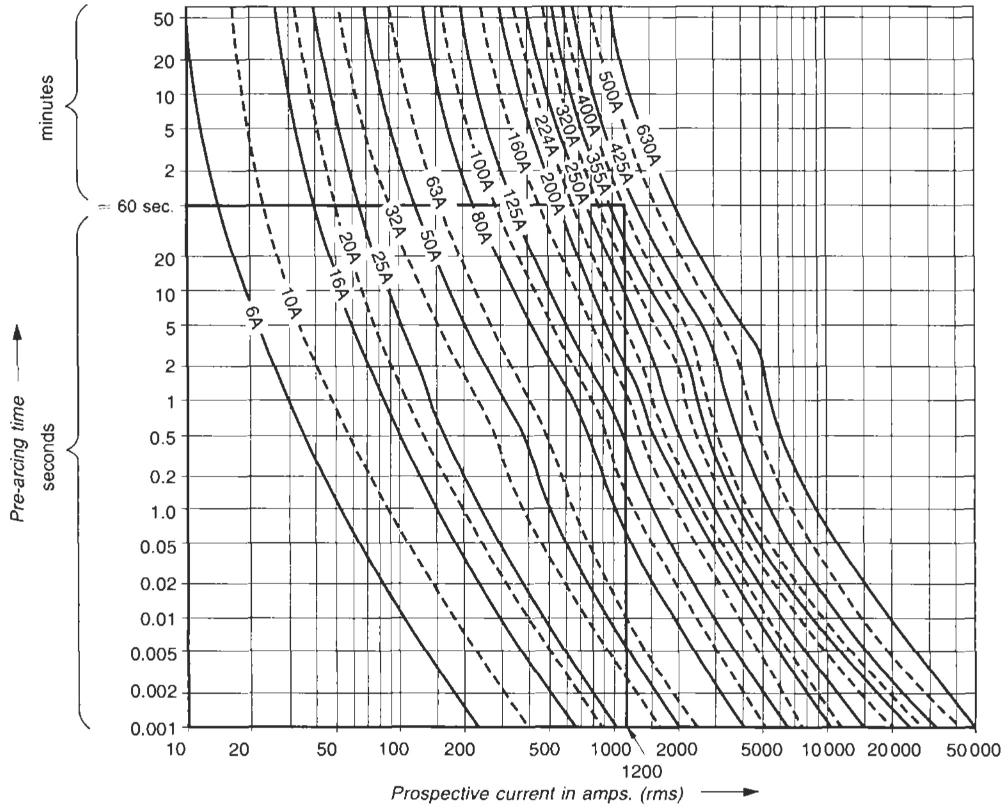

Figure 21.4 Figure 12.19 reproduced for illustration (Courtesy: Siemens)

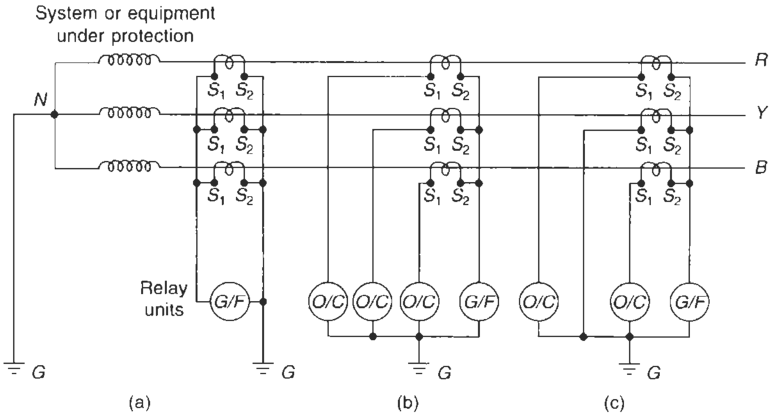

(a) Only for a ground fault (*G/F*) protection
(b) For 3–*O/C* and 1–*G/F* protections
(c) For 2–*O/C* and 1–*G/F* protections

Figure 21.5(a) Unrestricted G/F protection schemes for three-phase three-wire systems

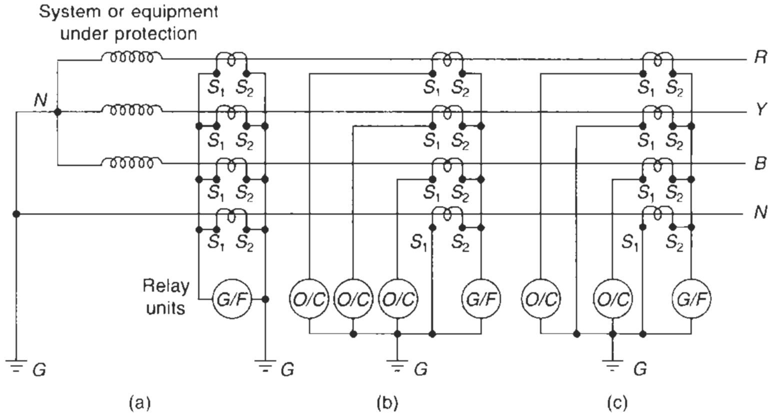

(a) Only for a ground fault (*G/F*) protection
(b) For 3–*O/C* and 1–*G/F* protections
(c) For 2–*O/C* and 1–*G/F* protections

Figure 21.5(b) Unrestricted G/F protection schemes for three-phase four-wire systems

(b) show different methods of CT connections for a ground fault protection. The fault current in this case need not be very high. It should rather be limited to a low value, to limit damage to the equipment. As a rule of thumb it may be up to the rated current of the feeding transformer, or the rating of the incoming feeder, or twice the rating of the largest outgoing feeder, depending upon the circuit to be protected.

The most common practice, however, is to limit the ground fault current to only half the rated current of the system, or the circuit that is being protected. This is also in line with the universal practice of having the neutral of half the size that of the phases. The neutral is normally grounded to form a complete circuit through the ground conductor in the event of a ground fault. Refer to Figure 21.6, showing a typical distribution network illustrating the grounding circuits.

The preferred normal settings in a ground fault relay are 10–40% or 20–80% of the rated system current, depending upon the application. For a balanced load, a setting of, say, 10–20% is sufficient. For a system having more single-phase light or power loads, a higher setting would be necessary, depending upon the likely single-phase loads. This is to avoid false tripping on a healthy system, as all the out-of-balance current will flow through the neutral only.

The theory of operation of such a protection scheme is based on the principle that in a balanced circuit the phasor sum of currents in the three healthy phases is zero, as illustrated in Figure 21.7, and the current through the grounded neutral is zero. In the event of a ground fault, i.e. when one of the phases becomes grounded, this balance is upset and the out-of-balance current flows through the grounded neutral. A healthy three-phase circuit, however,

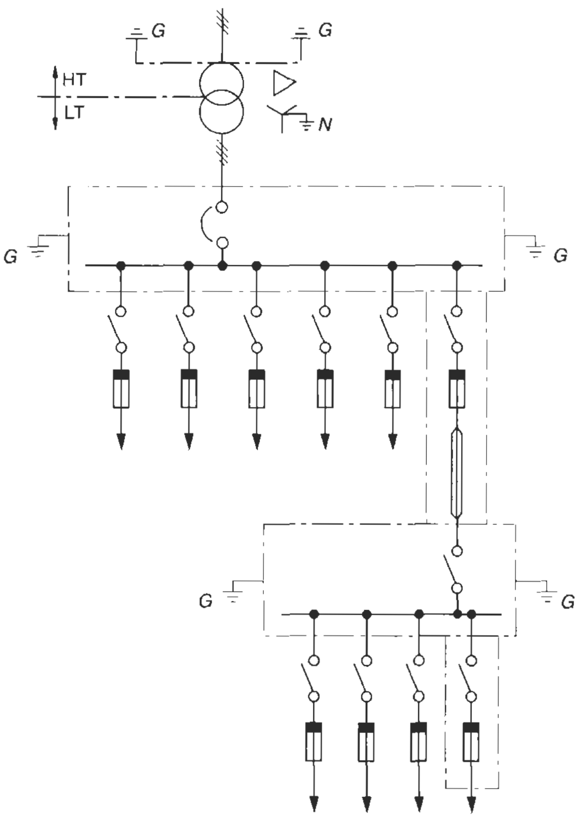

Figure 21.6 An HT to LT distribution system showing grounding circuits

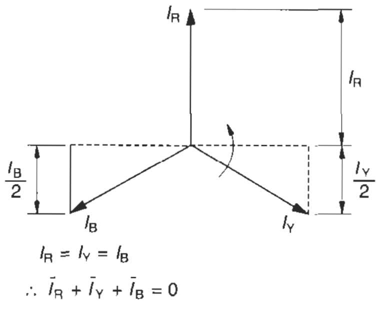

Figure 21.7 Phasor sum of a balanced three-phase system is zero

does not necessarily mean that each current phasor R, Y or B individually is equal in magnitude and phase. Even if it has unbalanced currents in the three phases (which is a likely situation in a three-phase system, see also Section 12.2(v), it will not cause a current to flow through the ground circuit, as illustrated in Figure 20.19(a). The current through the ground circuit will flow only when any one or more of the phases has a ground fault and forms a complete circuit through the ground loop conductor, as illustrated in Figure 20.19(b), and disturb the balance of the system. Similarly, on a single phasing, although the balance is upset, there is no current through the ground circuit and this scheme would not detect a single phasing.

21.3 Ground fault protection in hazardous areas

These are highly sensitive areas and a little higher level of a ground fault current can be catastrophic. It is therefore mandatory at such locations to keep their ground leakage current (rather than the ground fault currents) low by maintaining a certain level of ground loop impedance and then be able to detect and isolate these currents promptly.

The leakage current at hazardous locations such as refineries, petrochemical plants and mines should not exceed 15% of the rated current of the circuit or 5 A, whichever is greater. Table 21.3 indicates the maximum permissible ground leakage currents for such areas at 15% of the rated current and the recommended maximum ground loop impedances.

The use of core-balanced CTs is quite common for such applications. They are specially designed to detect the ground leakage current of a circuit. This ground leakage is then used to trip the faulty circuit through a ground

Table 21.3 Maximum impedances of ground loop for protection by ground leakage relays in hazardous areas

Current rating of circuit *Amp*	*Maximum permissible ground leakage current*[a] *'C'* *Amp*	*Recommended maximum ground loop impedance on a 240 V phase to ground circuit*[b] $Z_g = \frac{240}{1.5 \times c}$ Ω
5	5	32
10	5	32
15	5	32
20	5	32
30	5	32
40	6	26.7
60	9	17.8
80	12	13.3
100	15	10.7
125	18.7	8.6
150	22.5	7.1
175	26.2	6.1
200	30	5.3
300	45	3.5
400	60	2.7

Notes

[a] Highly sensitive ground leakage relays can sense a current as low as 0.1 A and less and at a much higher ground loop impedance.

[b] Calculated to allow at least 150% of the maximum permissible current to be on the safe side. For example, for 15A maximum ground leakage current, maximum impedance at 240 V

$$= \frac{240}{1.5 \times 15} = 10.7\ \Omega$$

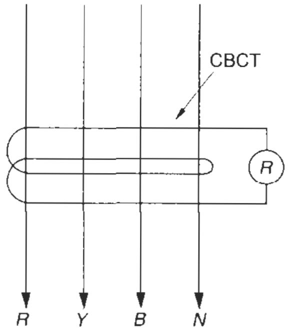

Figure 21.8 Schematic of a core-balanced CT (CBCT)

fault relay, wired at the secondary of such CTs, as shown in Figure 21.8.

The theory of operation of a ground leakage circuit breaker (GLCB) is also the same as the combination of a core-balanced CT and a ground leakage relay. For industrial application, use of a core-balanced CT with a ground leakage relay and for domestic application use of a GLCB is more common.

21.4 Ground leakage in an HT system

In HT systems, the situation is different from that in LT due to high phase to ground voltage V_g. It is now capable of causing high ground fault currents. To contain these currents in such a system the normal practice is to increase the ground impedance by inserting some impedance into the ground circuit through the grounded neutral. The criterion of choosing a resistance or a reactor is discussed in Section 20.4.2. An HT system at the main distribution point is normally protected through relays for different protective schemes and not through fuses or overcurrent releases. Since a relay is much more sensitive and is quicker to respond, even a small ground leakage current will be enough to actuate it and isolate the faulty circuit. The ground loop impedance in an HT system is therefore kept much higher than on an LT system. Moreover, since modern relays are able to sense a current as low as 0.1 A or less, the universal practice is to have as large a ground loop impedance as possible to limit the ground leakage current, such that under no conditions will the touch and step voltages exceed the permissible tolerable levels as defined in Section 22.9.

21.5 Core-balanced current transformers (CBCTs)

These are generally employed to detect small amounts of ground leakage currents, such as in mines and other sensitive installations. They are also used to protect sensitive equipment against small ground leakages. Installations having isolated neutral or using ground resistance or impedance, to limit the ground leakage currents, may also require this type of fault detection.

A core-balanced CT is in a toroidal (circular) or rectangular form, like a conventional protection CT, except that it is designed, with a large core opening to accommodate all the 3-, $3\frac{1}{2}$-or 4-core feeder cables passing through it (Figure 21.8). The basic difference between this and conventional protection CTs is the low unbalance or leakage current at which a CBCT operates. A normal protection CT would operate between its rated and accuracy limit currents, as discussed in Section 15.6.5. The important design parameter in a CBCT is its magnetizing current at the relay operating voltage, rather than the class of accuracy and accuracy limit factor.

21.5.1 Design parameters for a CBCT

As these CTs have to detect small to extremely feeble ground leakage currents their operating region is required to be very low, near the 'ankle point' (almost 10% of the knee point voltage) on the magnetizing curve. The design criterion is thus the minimum exciting current required at the relay operating voltage (details available from the relay manufacturer) to actuate the relay.

Consider the equivalent tripping circuit diagram of the CBCT in Figure 21.9. If

R_{CT} = resistance of the CBCT
R_L = resistance of the connecting leads
R_r = resistance of the protective relay
I_{re} = relay operating current
V_r = relay operating voltage at the relay current setting
I_p = primary unbalance or ground fault current
$= \overline{I_R} + \overline{I_Y} + \overline{I_B}$
n = turns ratio of the CBCT
$I_{n\ell}$ = magnetizing (leakage) or no-load current of the CBCT at the relay operating voltage V_r

Then $V_r = I_{re}(R_{CT} + R_L + R_r)$ and the primary ground fault current

$$I_p = n(\overline{I_{re}} + \overline{I_{n\ell}})$$

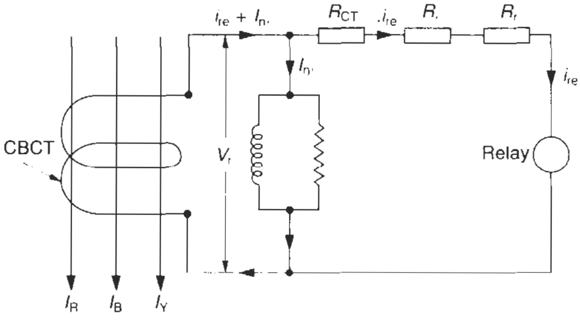

$I_p = \bar{I}_R + \bar{I}_Y + \bar{I}_B$
i_{re} = Relay operating current
$i_{n\ell}$ = CT no load or excitation current

Figure 21.9 Equivalent circuit of a CBCT protection circuit

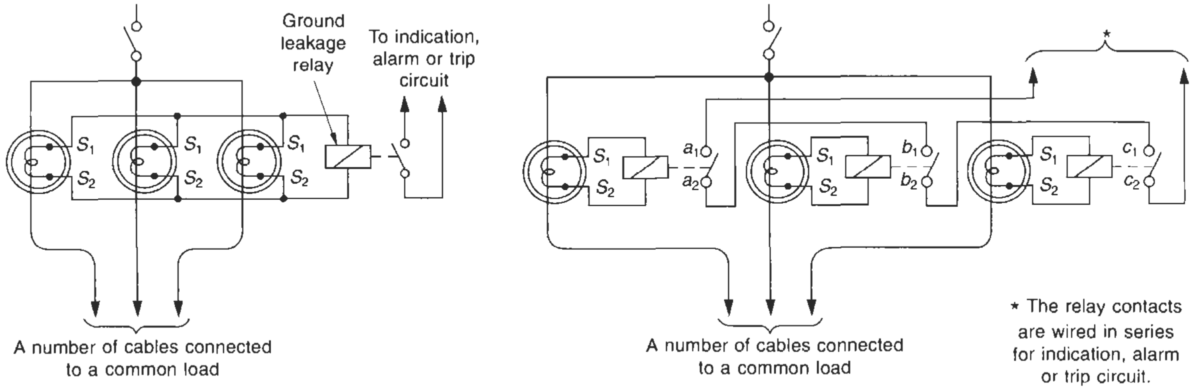

(a) Separate CBCT for each cable.

(b) Separate protective circuit for each cable

Figure 21.10 Methods to wire a protective circuit through CBCTs

Since on a fault the power factor is normally low, I_{re} and $I_{n\ell}$ may be considered almost in phase, when

$$I_p \simeq n(I_{re} + I_{n\ell})$$

Since V_r and $I_{n\ell}$ are interdependent parameters the optimum design is achieved when $I_{n\ell}$ at V_r is of the same magnitude as the relay operating current, i.e. $I_{n\ell} \simeq I_{re}$.

For high current systems, using more than one cable in parallel, the number of CBCTs will also be the same as the number of cables, as illustrated in Figure 21.10, in which case

$I_p = n[I_{re} + N \cdot I_{n\ell}]$ for N number of CTs

All such CBCTs have to be identical in turns ratio and magnetizing characteristics to avoid circulating currents among themselves. To order a CBCT the following information will be essential:

- Minimum primary ground leakage current
- Nominal CT ratio. This may be such that on the smallest ground fault the current on the secondary is sufficient to operate the relay. Normal $I_p = 50$, 100 and 200 A. It is recommended to be such that $V_r \simeq 0.1 \times$ knee point voltage of the CBCT
- Relay setting
- CT secondary current, 1A or 5A
- Minimum excitation current required at the relay operating voltage
- Knee point voltage
- Number of cables in parallel
- Limiting dimensions and internal diameter (ID) of the CT. ID will depend upon the size of the cable.

21.5.2 Insulation level

Irrespective of the system voltage, a CBCT may be designed for an insulation level of only 660 V. The cable insulation of the HT conductor is sufficient to provide the required insulation between the conductor and the CBCT.

21.5.3 Mounting of CBCTs

The following is the correct procedure for the proper mounting of these CTs:

1 It is necessary to pass all the 3, $3\frac{1}{2}$ or 4 cores of the cable through the core of the CBCT to detect the unbalance or the ground leakage in 3-core cables and only ground leakage in $3\frac{1}{2}$- and 4-core cables. To explain this see Figures 21.11(a) and (b). A 3-core cable will detect an unbalance in the three phases, whether this is the result of unequal loading in the three phases or a ground fault. However, $3\frac{1}{2}$- or 4-core cables will detect only a ground leakage as the amount of unbalance, when it occurs, will be offset by the flow of this unbalanced current through the return path of the neutral circuit. When using only 3-core cables, the load must be almost balanced otherwise it will send wrong signals or a higher setting of the relay will become essential to account for the out-of-balance currents due to the feeders' unequal loading.

2 In armoured cables, armouring must be removed before passing the cable through the CBCT to avoid an induced e.m.f. through the armour and the corresponding magnetizing current which may affect the performance of the CT.

3 As such CTs are required to detect small out-of-balance currents, the connecting leads should be properly terminated and must be short to contain the lead resistance as far as possible.

4 For high-rating feeders using more than one cable, there must be one CBCT for each cable. Not more than one cable must pass through such CTs. The secondary of all such parallel CTs may, however, be connected in series, across the common relay (Figure 21.10(a)).

All CBCTs being used in parallel and intended for the same feeder must have identical magnetizing characteristics and calibration in order to relay identical signals. Even then small variations in the output may

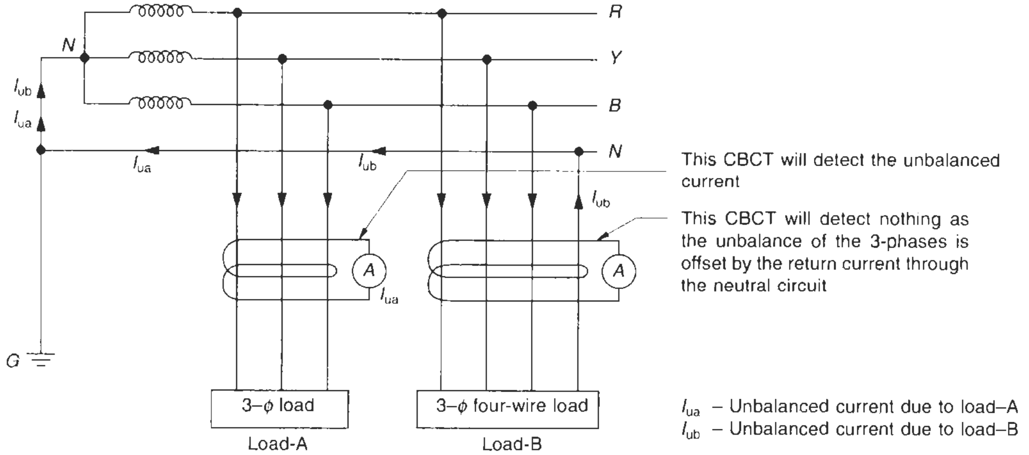

This CBCT will detect the unbalanced current

This CBCT will detect nothing as the unbalance of the 3-phases is offset by the return current through the neutral circuit

I_{ua} – Unbalanced current due to load–A
I_{ub} – Unbalanced current due to load–B

(a) On a healthy system

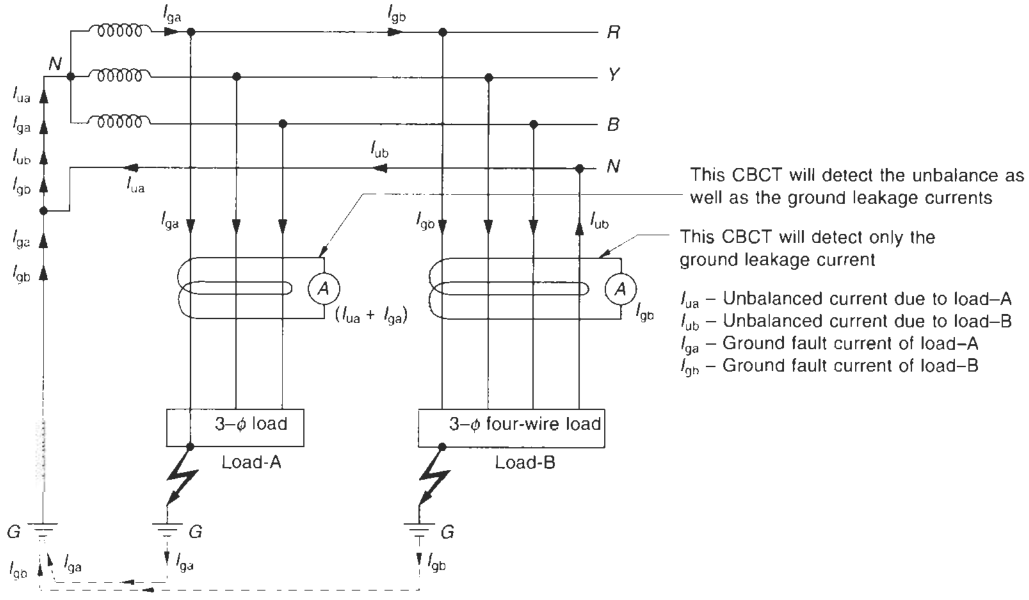

This CBCT will detect the unbalance as well as the ground leakage currents

This CBCT will detect only the ground leakage current

I_{ua} – Unbalanced current due to load–A
I_{ub} – Unbalanced current due to load–B
I_{ga} – Ground fault current of load–A
I_{gb} – Ground fault current of load–B

(b) On a ground fault

Figure 21.11 Detecting the unbalance and the ground leakage currents through a CBCT

occur which could affect the sensitivity of a circuit using more than one CBCT. If such a reduction in sensitivity is considered detrimental to the protection of the system or the equipment, it is advisable to use a separate relay with each CBCT (Figure 21.10(b)). For a common indication, alarm or trip, the relays' trip contacts may be wired in series.

5 When using only single-core cables, the same method should be adopted, as discussed above. Groups may be made of 3, $3\frac{1}{2}$ or 4 cores (R, Y, B or R, Y, B and N) of single-core cables, and one CBCT used in circular or rectangular form, whichever is more convenient, for each group.

Note

In an HT system it is recommended that each circuit be protected separately for a ground leakage as far as possible. This is to localize the effect of the fault and to trip only the feeder of the faulty circuit. A common protection in the incoming is not advisable, except for cost considerations, which also will be nominal for such a protection scheme compared to the cost of the main equipment. Otherwise a ground leakage in the downstream may trip the whole system, which may not be desirable. It is also possible that at the downstream, the ground leakage is very feeble due to high ground loop impedance and may not be sufficient to be detected by the common ground leakage protection provided at the incoming. It is also possible that the setting of the relay is not so low as to detect this. Thus to provide a ground leakage protection for each individual circuit will be worth while without any serious cost implications. Such a philosophy, however, will not hold good for a system which is protected only through its incoming feeder and all the outgoing feeders are merely isolators. In this case the ground leakage protection will have to be centralized for the entire system and provided in the incoming feeder only.

21.6 Ground fault (G/F) protection schemes

A scheme for a ground fault protection will depend upon the type of system and its grounding conditions, i.e. whether the system is three-phase three-wire or three-phase four-wire. A three-wire system will require an artificial grounding while for a four-wire system the type of grounding must be known, i.e. whether it is effectively (solidly) grounded or non-effectively (impedance) grounded.

Grounding protection will depend upon the measurement of the residual quantities (V_0 or I_0) that will appear across the ground circuit in the event of a ground fault. As discussed above, in a balanced three-phase system the voltage and current phasors are 120° apart and add up to zero in the neutral circuit. In the event of an unequally distributed system or a ground fault, this balance is disturbed and the out-of-balance quantities appear across the neutral or the ground circuit respectively. The current through the ground circuit will flow only when there is a ground fault, the fault current completing its circuit through the ground path. The normal unbalanced current, due to unevenly distributed single-phase loads or unequal loading on the three phases, will flow only through the neutral circuit.

In a phase-to-phase fault, however, the system will be composed of two balanced systems, one with positive sequence and the other with negative sequence components. The phasors of these two systems individually will add up to zero, and once again, as in the above case, there will be no residual quantities through the neutral or the ground circuit, except for the transient and spillover quantities.

The ground fault current may be detected through three or four CTs, one in each phase and the fourth in the neutral circuit (Figures 21.5(a) and (b)). Through the neutral to discriminate the fault, as discussed later.

Note

In a G/F the three CTs will also measure the unbalanced load current, if any, in addition to G/F current. For an appropriate setting of the relay, therefore, it will be essential that the likely system unbalanced current be measured and the relay set in excess of this to detect a G/F. For systems feeding single-phase or unbalanced loads, prone to carrying high and widely fluctuating unbalanced neutral currents, it may be difficult to determine the likely amount of unbalance and provide a suitable setting for the G/F relay. In such cases use of four CTs or core-balanced CTs (if it is a four-wire system) would be more appropriate.

Below we discuss the more widely adopted practices to detect a ground fault, i.e.:

- Protection through a single CT
- Restricted G/F protection
- Unrestricted G/F protection
- Directional G/F protection and
- Differential G/F protection (high impedance differential protection is discussed in Section 15.6.6(1)).

21.6.1 Protection through a single CT

This is the simplest method to protect an equipment against a G/F (Figure 21.12). It can, however, be applied only at the source, which is a generator or a transformer, provided that the source has no other parallel grounding paths in the vicinity. This is to avoid sharing of the fault current and false or inadequate detection of the fault current by the relay. This scheme is therefore more functional at the main generating source, such as at the generator or the generator transformer, having a low impedance solidly grounded neutral.

For any other equipment or system, such as shown in Figure 21.13, the fault current may be shared by the various grounding stations in the vicinity and the relay may not sense the real extent of the fault, even when the system is effectively grounded. A part of the fault current, may now flow through the other nearby grounding stations. Moreover, for a fault on another feeder spill currents may also pass through such relays and trip them (unwanted) when the relays are highly sensitive or have a low setting. Such a scheme will also not discriminate when required, and hence will have limitations in its application. Nevertheless, it is common practice to apply single CT protection through neutral circuits of the grounded transformers anywhere in the system, generation, transmission or distribution. Multiple groundings may cause problems, but this is taken into account at the design/planning stage.

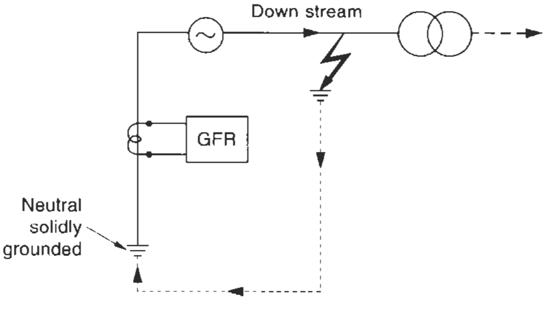

Figure 21.12 Ground fault protection through a single CT

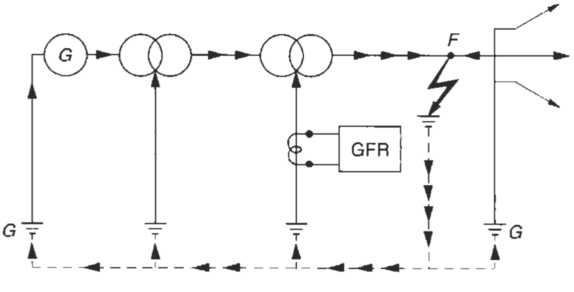

Figure 21.13 Limitation in using a single CT for a G/F protection when the equipment has more than one parallel ground path

21.6.2 Restricted ground fault protection

When it becomes essential to discriminate between a fault within the circuit to be protected from one outside the circuit, this scheme may be adopted. While doing so, it must be ensured that adequate ground fault protection is available to the remaining feeders, if connected on the same system.

For a three-phase three-wire system (generally HT systems)

The scheme for a three-phase three-wire artificially grounded system will require four CTs, identical in design parameters, turn ratio, error and magnetizing characteristics. Otherwise spill currents may occur sometimes sufficient to operate inadvertently a low-setting or highly sensitive ground fault relay. The fourth CT through the ground circuit is used with the same polarity as the three CTs of the phases. Then only would the residual current of the phase CTs fall 180° apart from that of the ground circuit CT. Such an arrangement will provide the desired discrimination, to detect the fault occurring within the protected zone. Figures 21.14(a) and (b) illustrate this discrimination through the use of the fourth CT. The residual current of the three-line CT, in a healthy condition, in the event of an unbalance in the system, is taken care of by raising the setting of the relay to account for the unbalance, as in a core-balanced CT. The fault current through the relay will flow only on a G/F occurring within the restricted zone as illustrated in Figure 21.14(a). For faults occurring outside the restricted zone, as shown in Figure 21.14(b), the fault current through the ground circuit CT will be offset by the residual current of the three-phase CTs and thus the relay will remain immune to such a fault.

For a three-phase four-wire system (generally LT systems)

A three-phase three-wire system is generally a balanced system and has negligible unbalanced residual current through the three-phase CTs. The relay for a ground fault protection can thus be set low. The scheme discussed above is thus satisfactory for a G/F. But in three-phase four-wire LT systems, which are generally unbalanced, the above scheme poses a limitation as there may now be a substantial residual unbalanced current through the relay. For G/F protection, therefore, such a scheme will require a higher setting of the relay to avoid a trip in a healthy condition. It is possible that this setting may become sufficiently high, for highly unbalanced systems to detect an actual G/F and defeat the purpose of G/F protection. Such a situation can be averted by providing a fifth CT in the neutral circuit as shown in Figure 21.15, which obviously will have its excitation current direction opposite to the residual current of the three-phase CTs. Hence, it will offset the same, and the relay can be set low. It is therefore mandatory to use five CTs in LT systems for adequate restricted G/F protection.

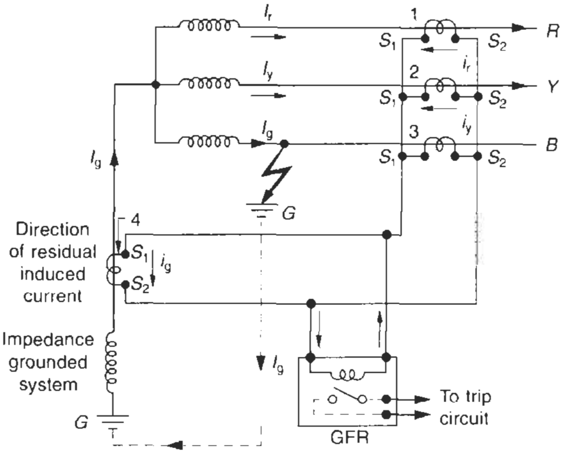

Note All the four CTs must be wired with the same polarity

(a) Relay operates when the fault occurs within the protected zone

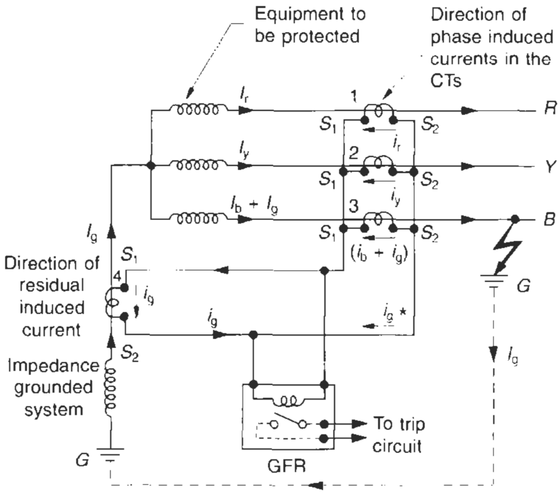

Note All the four CTs must be wired with the same polarity

* Induced residual fault current through the phase CTs. ($\bar{i}_t = \bar{i}_r + \bar{i}_y + \bar{i}_b + \bar{i}_g$) is equal and falls opposite to the residual current i_g through the ground circuit CT. ($\bar{i}_r + \bar{i}_y + \bar{i}_b$) is considered zero under healthy condition. For small unbalances the relay is set a little higher.

(b) The relay stays immune to a fault occurring outside the protected zone.

Figure 21.14 Scheme for a three-phase three-wire restricted ground fault protection for an HT system

Application

1 A restricted ground fault is recommended for equipment that is grounded, irrespective of its method of grounding. Unless the protection is restricted, the equipment may remain unprotected. Generally, it is an equipment protection scheme and is ideal for the protection of a generator, transformer and all similar

equipment or circuits, requiring individual protection. Figure 21.16 illustrates the operation of the relay when the fault occurs within the protected zone. The scheme will prevent isolation of the equipment for faults occurring outside the restricted zone (Figure 21.17).

2 A delta-connected or an ungrounded star-connected winding should also be protected through a restricted ground fault scheme, otherwise it will remain unprotected. There is no zero sequence or residual current in such a winding to detect a ground fault.

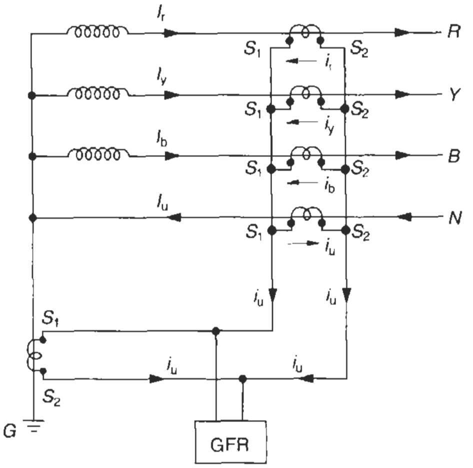

Under healthy condition the unbalance residual current of the 3 phase CTs is nullified by the equal and opposite current in the neutral CT. There is thus no current through the relay.

$$\bar{I}_r + \bar{I}_y + \bar{I}_b = \bar{I}_u$$

Figure 21.15 Scheme for restricted G/F protection for a three-phase four-wire system. Healthy condition

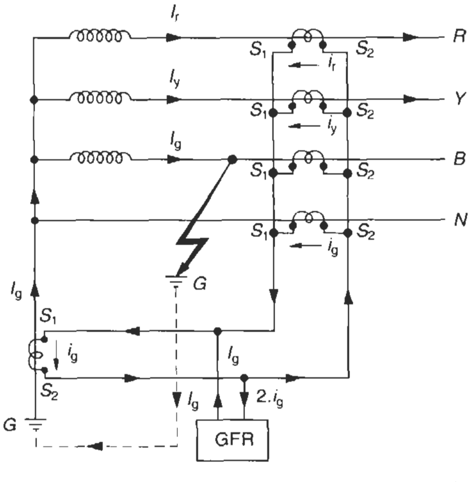

The residual currents are additive and the relay can be set low.

Figure 21.16 Scheme for restricted G/F protection for a three-phase four-wire system. Fault occurring within the protected zone

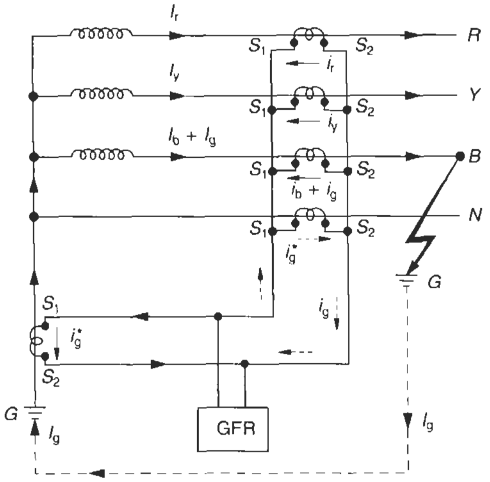

* The residual currents are equal and opposite, hence nullify and the relay stays inoperative.

Figure 21.17 Scheme for restricted G/F protection for a three-phase four-wire system. Fault occurring outside the protected zone

The arrangement will be similar to that for directional protection of a delta side of a transformer, as discussed later, with the use of a grounding transformer (Figures 21.19 and 21.20).

21.6.3 Unrestricted ground fault protection

The CT provided in the ground circuit is now removed and the same scheme becomes suitable for an unrestricted G/F or a combined G/F and phase fault protections. It is true for a three-phase three-wire or a three-phase four-wire system. This scheme may also be arranged for a combined O/C and G/F protections as illustrated in Figures 21.5(a) and 21.5(b).

Application

This is the most common scheme in normal use for any power system with more than one feeder, connected to a common bus, such as for distribution and sub-distribution power networks, having a number of load points, controlled through a main incoming feeder. In a switchgear assembly, for instance, common protection may be provided at the incoming for a ground fault or combined O/C and G/F protections as discussed above. In such cases, a restricted G/F protection may not be appropriate or required, as the protection now needed is system protection, rather than individual equipment protection. The incomer must operate whenever a fault occurs at any point on the system. Moreover, for an LT system, where it may not be desirable or possible to provide individual protection to each feeder, such a scheme is adopted extensively.

21.6.4 Directional ground fault protection

In the previous section we discussed non-directional protection of an equipment or a system. But for systems

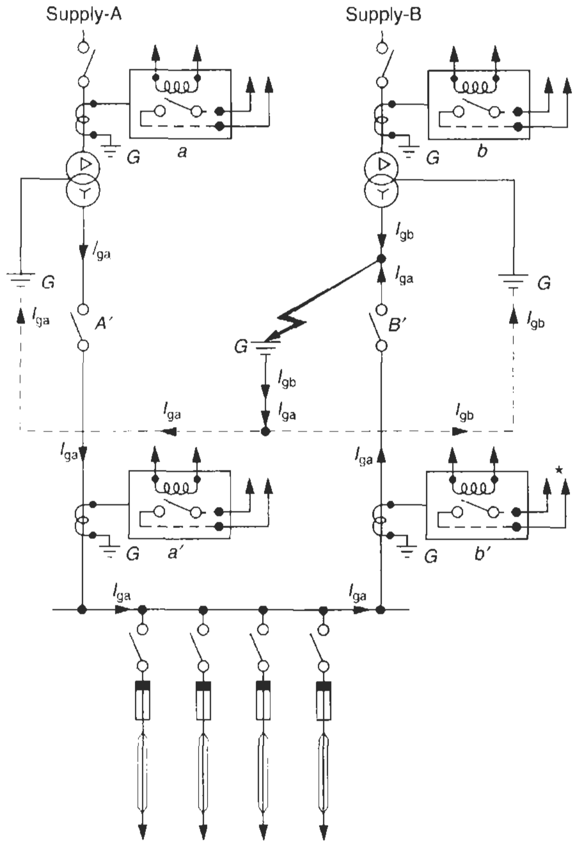

Note
a, *b* – are non-directional GFR's
a′, *b*′ – are directional GFR's
* Reverse direction current, I_{ga} through relay *b*′ would trip breaker *B*′ and reduce I_{ga} to zero.

Figure 21.18 System using directional ground fault relays

with more than one source of supply in parallel, such as a power grid, receiving power from more than one source (Figure 13.21) or an industrial load, having two or more sources of supply, one of them being a captive power source, it is possible that a fault on one may be fed by the other sources and may isolate even a healthy system, thus rendering the system unstable. Such a situation requires discrimination of a fault and can be prevented by the application of directional G/F protection. The primary function of a directional G/F protection is thus discrimination.

In the above situation, even an overspeeding motor on a fault elsewhere would feed back the supply source and require such protection. The protective scheme isolates the faulty source from being fed by the healthy sources. Figure 21.18 illustrates a simple power circuit provided with a directional G/F relay. In the event of a fault in system B, source B alone would isolate. Source A would not feed the fault as relay b′ would trip the breaker B′ and eliminate I_{ga}. The relays are necessarily set at lower settings and at lower tripping times than the non-directional GFR to isolate the faulty feeder quickly than to wait for the trip by the non-directional relay. This is to avoid a trip of the non-directional relay 'a' on system A.

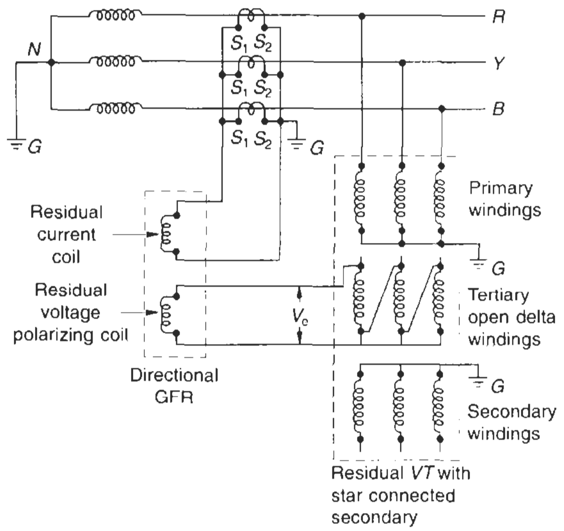

Figure 21.19 A typical scheme for a directional *G/F* protection relay

A directional G/F relay basically is a power-measuring device, and is operated by the residual voltage of the system in conjunction with the residual current detected by the three CTs used for non-directional protection, as shown in Figure 21.19. To provide directional protection, therefore, a residual VT is also essential, in addition to the three residual CTs. The voltage phasor is used as a reference to establish the relative displacement of the fault current. In healthy conditions, i.e. when the current flows in the right direction, $V_e = 0$, (refer to Section 15.4.3 for details), and the relay remains inoperative. The relay operates only when the current flows in the reverse direction.

Note
This relay may be used only under unrestricted fault conditions, with three CTs as shown. If the scheme is used under a restricted fault condition, with the fourth CT in the neutral, the directional relay will remain immune to any fault occurring outside the zone of the three CTs, as the fault current through the fourth CT will offset the residual current, detected by the three CTs (Section 21.6.3), rendering the whole scheme non-functional.

Current polarization

Voltage polarization depends upon the location of the relay and the location of the fault. It is possible that the residual voltage, at a particular location in the system, is not sufficient to actuate the voltage coil of the directional G/F relay. In such an event, current polarization is used to supplement voltage polarization. Current polarization is possible, provided that a star point is created on the system, even through a ⅄/▷ power transformer, if such a transformer is available in the same circuit, Figure 21.20. Else a grounding transformer may be provided as illustrated in Figure 21.21, and grounded neutral utilised, to provide the required residual current polarization, to actuate the ground fault relay.

Note
The two currents, residual and polarizing, are capable of operating the relay.

21.6.5 Current setting of a ground fault relay

1 Selection of CTs for ground fault protection particularly needs more careful consideration of the fault conditions and impedance of the ground circuit, in addition to the location of the CTs. This is due to a rather low setting of the G/F relay, 10–40% or 20–80% of the full load current or even lower, as in mines and other sensitive locations. Too low a setting may even trip a healthy system due to ground capacitance leakage currents (more so in HT circuits) or unbalanced currents through the neutral (more on LT circuits). In core-balanced CTs detecting small leakage currents, it is possible that during a phase–to–phase fault there may be transient spill currents through its residual circuit, which may operate the low-set and more sensitive G/F relay, which may not be desirable. To overcome this, the time setting of the relay may be suitably adjusted so that the overload relay will operate faster than the G/F, or slightly higher setting for the relay may be provided or time delay in the trip circuit introduced.

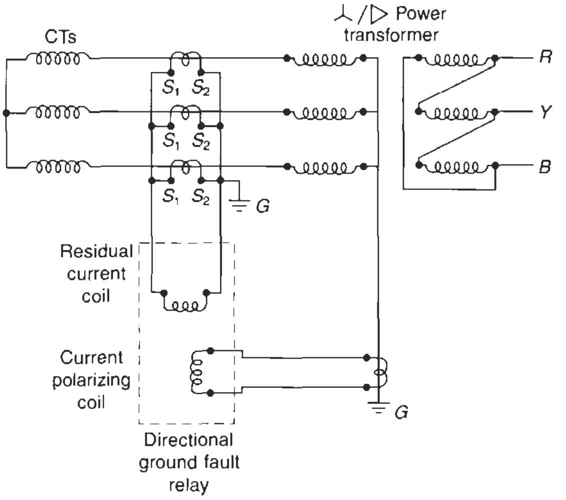

Current polarization through the grounded neutral of a ⅄/▷ power transformer

Figure 21.20 Typical circuit illustrating current polarization scheme to operate a direction GFR

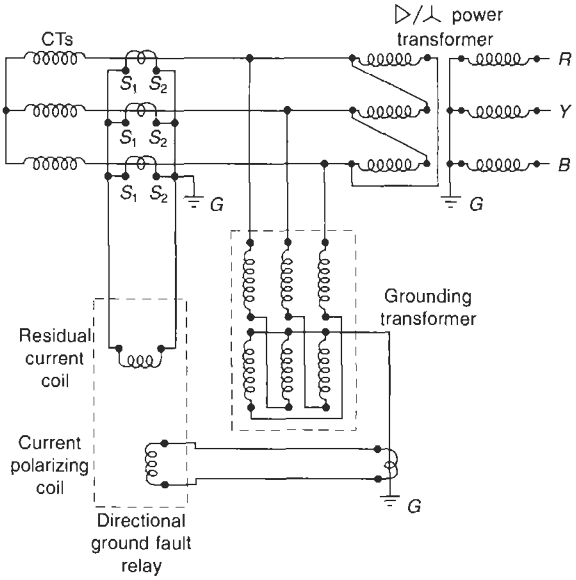

Current polarization through the grounded neutral of a grounding transformer

Figure 21.21 Typical circuit illustrating current polarization scheme to operate a directional GFR

2 In another situation, when the ground circuit has a higher impedance than designed it may be due to poor soil conditions, dry soil beds, rocky areas, poor grounding stations or inadequate maintenance. In such conditions, the ground circuit may provide a lower fault current than envisaged. Sometimes an overhead conductor may snap due to strong winds and fall on dry metallic roads, hedges and shrubs causing extremely low leakage currents, creating a hazard to life and property. This may cause an arcing ground, leading to fire hazards. For all such locations and situations, very low current settings (of the order of 5% of I_r or even lower) or leakage current detection through core-balanced CTs may be adopted.

3 For circuits protected by HRC fuses for short-circuit conditions, the G/F relay must be a back-up to the fuses, and trip first on a ground fault. In other words, I^2t (relay) < I^2t fuses.

Relevant Standards

IEC	*Title*	*IS*	*BS*
1008-1/1990	Residual current operated circuit breakers, without integral overcurrent protection, General rules		
1009-1/1991	Residual current operated circuit breakers, with integral over current protection, General rules		
60034-1/1996	Rotating electrical machines–Rating and performance	4722/1992 325/1996	BS EN 60034-1/1995
60255-6/1988	Electrical relays – Measuring and protection equipment	3842-1 to 12	BS EN 60255-6/1995
60364-1 to 7	Electrical installation of buildings	732/1989	BS 7671/1992
60479-1/1994	Guide on effects of current passing through the human body – General rules	8437-1/1993	PD 6519-1/1995
60479-2/1987	Guide on effects of current passing through the human body. Special aspects	8437-2/1993	PD 6519-2/1988
60755/1983	General requirements for residual current operated protective devices	12640/1988	BS 4293/1993
60898/1995	Electrical accessories – Circuit breakers for overcurrent protection for household and similar installations	8828/1996	BS EN 60898/1991
61024-1/1996	Protection of structures against lightning. General principles	2309-1989	BS 6651/1992 DD ENV 61024/1995
–	Code of practice for earthing	3043/1991	BS 7430/1998
–	Specification for grounding transformers	3151/1991	–
–	Code of practice for undesirable static electricity Part 1 General considerations Part 2 Recommendations for particular industrial situations	7689/1989	
	Related US Standards ANSI/NEMA and IEEE		
ANSI C 37.16/1988	Low voltage power circuit breakers – preferred ratings and application recommendations		
NEMA 280/1990	Application guide for ground fault circuit interrupters		BS 5958-1/1991 BS 5958-2/1991

Notes

1 In the tables of Relevant Standards in this book while the latest editions of the standards are provided, it is possible that revised editions have become available. With the advances of technology and/or its application, the updating of standards is a continuous process by different standards organizations. It is therefore advisable that for more authentic references, readers should consult the relevant organizations for the latest version of a standard.

2 Some of the BS or IS standards mentioned against IEC may not be identical.

3 The year noted against each standard may also refer to the year of its last amendment and not necessarily the year of publication.

List of formulae used

Current passing through a human body

$$I_b = \sqrt{\frac{S_b}{t_b}} \qquad (21.1)$$

S_b = shock energy in watt-seconds (Ws)
I_b = r.m.s value of the leakage current through the body in Amperes (A)
t_b = duration of leakage current in seconds (s)

Safe currents through a human body

(i) for a 50 kg body

$$I_b\,(50\text{ kg}) = \frac{0.116}{\sqrt{t_b}} \qquad (21.2)$$

(ii) for a 70 kg body

$$I_b\,(70\text{ kg}) = \frac{0.157}{\sqrt{t_b}} \qquad (21.3)$$

Further reading

General Electric Co. Ltd, *Protective Relays and Application Guide, GEC Measurements*, St, Leonards Works, Stafford, UK
Taylor, H. and Lackey, C.H., 'Earth fault protection in mines', *The Mining, Electrical and Mechanical Engineer*, June (1961)

22

Grounding Practices

Contents

SECTION I

22.1 Grounding electrodes for industrial installations and substations

The following are a few types of grounding electrodes commonly used for the grounding of industrial installations, equipment grounding or small and medium-sized sub-stations.

22.1.1 Plate grounding

Refer to Figure 22.1. The approximate resistance to ground in a uniform soil can be expressed by

$$R = \frac{\rho}{4}\sqrt{\frac{\pi}{2A}}\ \Omega \text{ (derived from equation (22.12)} \quad (22.1)$$

where ρ = resistivity of soil, considered uniform in Ω *m*.
A = area of each side of the plate in m^2.

Note
The minimum thickness of plate is recommended as

- For cast iron – 12 mm
- For GI or steel – 6.3 mm
- For copper – 3.15 mm

and size not less than 600 mm × 600 mm

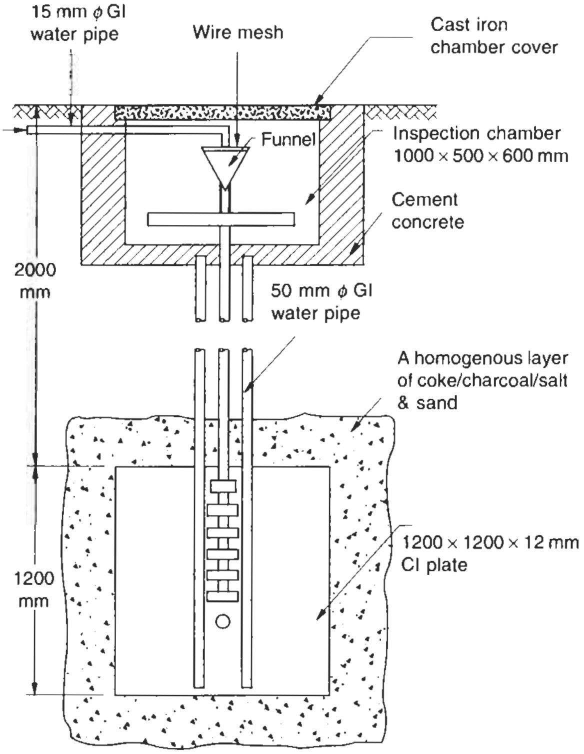

Note
The depth (2000 mm) would vary with the moisture content and quality of soil

Figure 22.1 A typical layout of a plate electrode

Example 22.1
The resistance to ground for a 600 mm × 600 mm plate grounding, considering a sandy soil, treated artificially and having attained an average soil resistivity of 10 Ωm

$$R = \frac{10}{4}\sqrt{\frac{3.14}{2 \times 0.6 \times 0.6}}$$

$$= 5.22\Omega$$

If the plate is 1200 mm × 1200 mm then

$$R = \frac{10}{4}\sqrt{\frac{3.14}{2 \times 1.2 \times 1.2}}$$

$$= 2.61\ \Omega$$

From the above the resistance to ground of a plate grounding is inversely proportional to the square root of the linear dimension ($\sqrt{A}$) of the plate. The variation in resistance with the size of the plate is shown in Figure 22.2. Considering the resistivity of soil as 10 Ωm, since the ground resistance is proportional to the resistivity of soil, there would be different parallel curves for the ground resistance for different values of resistivity of soil.

22.1.2 Pipe or rod grounding

Refer to Figure 22.3. In this case, the approximate resistance to ground in a uniform soil can be expressed by:

$$R = \frac{100 \cdot \rho}{2\,\pi \cdot l}\left[\log_e \frac{8l}{d} - 1\right]\Omega \quad (22.2)$$

where
l = length of pipe in cm
d = internal diameter of pipe in cm

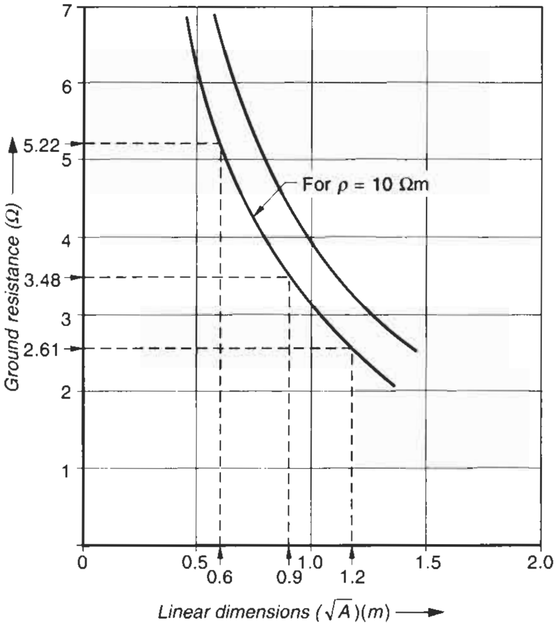

Figure 22.2 Variation in resistance to ground with the linear dimensions for a plate gounding, for the same resistivity of soil

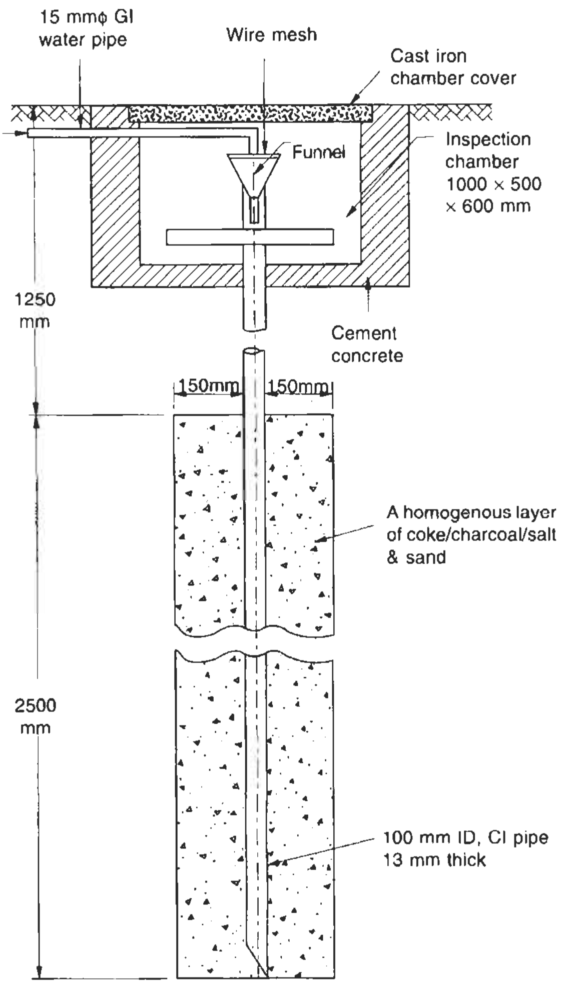

Figure 22.3 A typical arrangement of a pipe electrode grounding station

Note

The diameter, thickness and length of the pipe is recommended as follows:

- Cast iron pipes – 100 mm internal diameter, 2.5 to 3 m long and 13 mm thick. (This is a cumbersome and costlier arrangement, is not often used)
- MS pipes – 38 to 50 mm diameter, 2.5 to 3 m long (also not often used)
- Copper or GI rods – 13, 16 or 19 mm diameter, 1.22 to 2.44 m long.

This type of electrode grounding is more suited for a soil possessing high resistivity, and the electrode is required to be longer and driven deeper into the soil to obtain a lower resistance to ground. The approximate variation in resistance with the length of electrode for a particular value of resistivity of soil is shown in Figure 22.4, for general reference.

Example 22.2

The resistance to ground of a 19 mm internal diameter pipe, 2.44 m long, with ρ as 10 Ωm

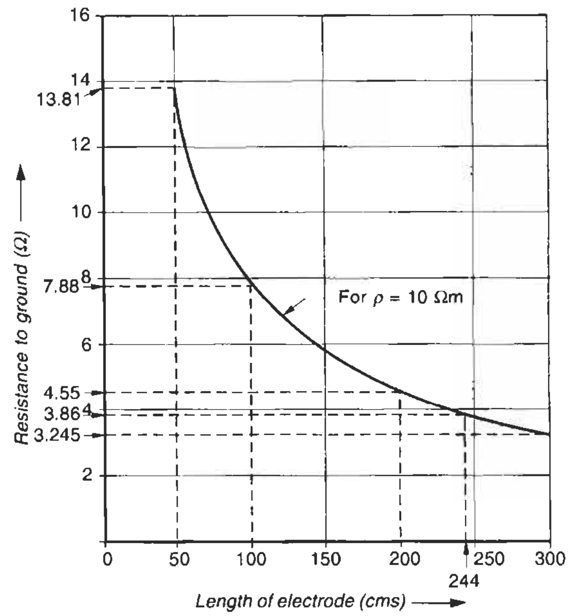

Figure 22.4 Approximate variation of resistance to ground with the length of pipe or a rod electrode for a particular value of resistivity of soil

$$R = \frac{100 \times 10}{2\pi \times 244} \times \log_e \frac{8 \times 244 - 1}{1.9} \text{ Ohms}$$

$$= 0.65\,[\log_e 1027.37 - 1]$$

$$= 0.65 \times [6.93 - 1]$$

$$\simeq 3.86\ \Omega$$

Figure 22.4 is drawn for ρ = 10 Ω m.

22.1.3 Strip or round conductor grounding

In this case the approximate resistance to ground in a uniform soil can be expressed by

$$R = \frac{100\rho}{2\pi \cdot l} \times \log_e \frac{2l^2}{hw} + Q \text{ Ohms} \tag{22.3}$$

where

l = length of strip or rod in cm
h = depth of the strip or rod in cm
w = width of the strip or diameter of the conductor rod in cm
Q = –1 for strip and –1.3 for round conductor grounding.

1. The minimum cross-sectional area of the strip or the rod should be chosen according to the ground fault current and its duration (Section 22.4.1 and equation (22.4)). The minimum area of cross-section is recommended as
   - For copper strip – 25 × 1.6 mm^2
   - For MS or GI strip – 25 × 4 mm^2
2. We have considered a single length of electrode. If there is more than one length the values can be obtained from BS 7430 for different electrode arrangements.

The performance of this type of electrode grounding is almost the same as for the pipe grounding (Section 22.1.2) as is the variation in resistance to the ground with the length of the electrode as in Figure 22.4.

Example 22.3
The resistance to ground for a 100 mm × 5 mm, 5 m copper strip, buried at a depth of 1.5 m, having a soil resistivity of 100 Ωm

$$R = \frac{100 \times 100}{2 \times \pi \times 500} \times \log_e \frac{2 \times 500^2}{150 \times 10} - 1$$

$$= 3.185 \log_e 333.33 - 1 = 3.185 \times 5.81 - 1$$

$$= 17.50\ \Omega$$

If the length of the strip is 25 m, other parameters remaining the same, then

$$R = \frac{100 \times 100}{2\ \pi \times 2500} \times \log_e \frac{2 \times (2500)^2}{150 \times 10} - 1$$

$$= 0.637 \log_e 8333.33 - 1$$

$$= 0.637 \times 9.03 - 1$$

$$= 4.75\ \Omega$$

22.1.4 Choice of grounding method

1 The normal ground impedance in LT systems, is generally high. To achieve a ground fault current of the order of $1\frac{1}{2}$ to 3 times the rated current, necessary to protect a low current system against a ground fault as discussed in Section 21.2.1, would be difficult unless adequate measures are taken with the grounding stations to have as low a ground impedance as possible. To achieve this, the grounding stations are made elaborate, at adequate depth, with proper chemical treatment and watering arrangements to ensure sufficient moisture throughout the year. This is attained by a perforated pipe driven from ground level up to the electrode. See Figures 22.1 and 22.3, showing typical arrangements of a grounding station, with a plate grounding and a pipe grounding respectively. Despite this, the ground resistance may still be too high to meet the design parameters.

To overcome this, a number of such grounding stations (two being a minimum to provide a double grounding system) may be essential and connected in parallel to achieve the required low value of ground resistance. A cumulative resistance of up to 2.5 Ω is considered satisfactory. However, for more effectiveness and to make the ground protective circuit more sensitive, a resistance of up to 1 Ω would be better. The grounding stations may be separated, centre to centre, by 2 m or more, to be out of each other's resistance zone. A better gap would be around 4.5 to 6 m, when full ground resistance may be achieved by each electrode without infringing on the resistance zone of the other electrodes as well as economizing on the number of electrodes. This use of more than one grounding station in parallel so that each station is out of the resistance zone of the other stations, would alter their cumulative resistance, generally as follows according to *Hand Book of Electrical Installation Practices* by E. A. Reeves:

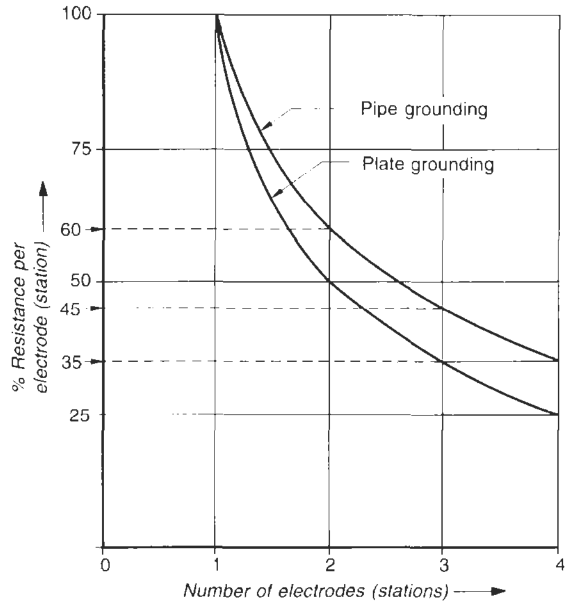

Figure 22.5 Likely variation in ground resistance with more than one electrode connected in parallel

Plate grounding

- For two electrodes – 50%
- For four electrodes – 25%

Pipe, rod or strip grounding

- For two electrodes – 60%
- For three electrodes – 45%
- For four electrodes – 35%

For more accurate calculations refer to BS 7430. The likely variation is illustrated in the form of the graph in Figure 22.5.

2 The resistance to ground would vary with depth of the electrode. A minimum depth of 1.5 m from ground to the top of the electrode is considered mandatory, and even deeper to reach damp soil.

3 A pipe or strip grounding is more effective than a plate grounding.

4 The size of the plate, the length of the pipe or the strip may be altered to obtain a lower value of ground resistance.

5 The choice of the metal (Section 22.4) for the grounding electrode will depend upon the corrosion factor of the soil. But all metals are equally good and possess a life span of 12 years and more. For a longer working life, the thickness of the electrode may be increased as discussed in Section 22.4.1. GI* being a more

---

*Apparently GI seems to be the best metal as a grounding electrode. But if part of the zinc coating of the metal is chipped due to poor coating or to any other reason, the metal is rendered prone to rapid corrosion and erosion and may fail with passage of time. Some users therefore prefer to use bare MS conductor rather than GI.

Table 22.1 Likely resistivity of soil

Type of soil	*Climatic conditions*			*Underground water salinity*
	Normal and high rainfall (more than 500 mm a year)	*Low rainfall or desert condition (less than 250 mm a year)*		
	Resistivity of soil			
	Ωm	*Ωm*	*Ωm*	*Ωm*
	(Likely value)	*(Likely range of values)*		
Alluvium and lighter clays, such as sandy and/or muddy soil	5	[a]	[a]	1 to 5
Clays (excluding alluvium)	10	5 to 20	10 to 100	–
Marls like keuper marl such as marble	20	10 to 30	5 to 300	–
Porous limestone like chalk	50	30 to 100	–	–
Porous sandstone such as keuper sandstone and clay shales	100	30 to 300	–	–
Quartzite's compact and crystalline limestone such as carboniferous marble	300	100 to 1000	–	–
Clay slates and slaly shales	1000	300 to 3000	1000 upwards	30 to 100
Granite	1000	–	–	–
Fossil slates, schists, gneiss, igneous rocks	2000	1000 upwards	–	–

Based on BS 7430

[a] Depends up on the water level of the locality

preferred metal for grounding purposes. Choice of the metal for the ground electrode would, however, depend upon the underground municipal services, such as water, sewerage and telephones and also the structures and foundations of nearby buildings to save them from corrosion and erosion. Copper, being galvanic, under damp conditions forms a complete electrolytic circuit between it and other metals and causes corrosion, which erodes the other metals (an effect similar to that discussed in Section 29.2.5, while making a bimetallic joint).

6 Any of the grounding methods may be adopted for industrial installations, equipment grounding or small and medium-sized sub-stations, depending upon the type and condition of the soil. A sandy soil will be easy to dig and plate grounding will be easier, while a rocky soil will present problems in digging and a pipe, rod or strip grounding would be easier. Similarly, dry soil will require deeper digging, where a pipe, rod or strip grounding would be a better choice.

22.2 Resistivity of soil (ρ)

This will depend upon the type and quality of soil and its chemical composition, i.e. the composition of salts and minerals, content of moisture and normal rainfall during the year. Table 22.1 obtained from BS 7430 and Table 22.2 from IEEE 80 show the likely resistivity of different types of soils in ohm-metres. These are only likely values for a general reference. It is recommended that where a grounding station is to be installed, the soil is tested at nearby locations and an average value of the soil resistivity is determined, as discussed in Section 22.11. The condition of soil, such as its moisture, content temperature and content of salts and other minerals have a large bearing on its resistivity. Figure 22.6 illustrates the effects of such factors on the resistivity of soil. While the temperature of the soil is a fixed parameter, at a particular location of the grounding station the soil can be artificially treated to improve the content of moisture and chemical composition, to achieve a lower value of soil resistivity. It has been found that the resistivity of soil can be reduced by 15–90% by a chemical treatment with the following salts

- Normal salt (NaCl) and a mixture of salt and soft coke
- Magnesium sulphate ($MgSO_4$)

} Economical and most commonly used salts

- Copper sulphate ($CuSO_4$)
- Calcium chloride ($CaCl_2$)
- Sodium carbonate (Na_2CO_3)

} More common salts

Table 22.2 Range of soil resistivity

Type of soil	*Average resistivity* Ωm
Wet organic soil	10
Moist soil	10^2
Dry soil	10^3
Bedrock	10^4

Based on IEEE-80

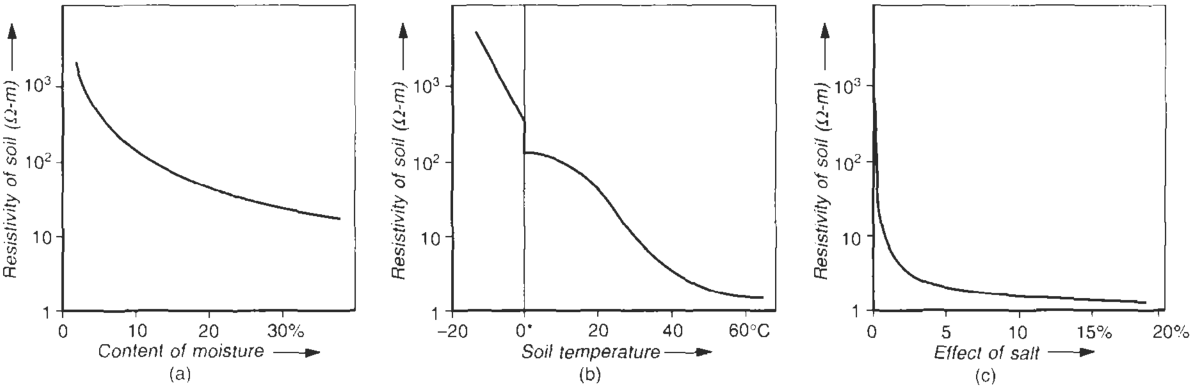

Figure 22.6 Effect of moisture content, temperature and salt on the resistivity of soil

Refer to Figures 22.1 and 22.3, illustrating a normal arrangement of grounding stations with provision for chemical or salt treatment. The salts used need not be in direct contact with the electrode.

22.3 Measuring the ground resistance

The above tables can give only a general idea of the theoretical value of resistivity of the soil at a particular site for the purpose of design work. The exact resistance of the grounding station must be determined at the site of installation to support theoretical assumptions and the grounding conditions adjusted, if necessary, to obtain the required ground resistance. The resistance of a grounding station can be measured with the help of a ground tester, which generates a constant voltage for accurate measurement. The tester has two potential and one current probe. The procedure of measurement is illustrated in Figure 22.7.

One of the potential probes *A* is drilled into the ground at about 25 m from the grounding station *G*, whose resistance is to be measured. The second probe *B* is placed between the two. The current lead of the meter is connected to the grounding station. The meter will indicate some resistance, which may be noted. Two more readings are also taken by shifting the centre probe *B* by almost 3 m on either side of the original location. For an accurate value of the ground resistance, the values obtained must be same. If they are not, the probe *B* is still within the resistance area of the grounding station *G*. Shift away probe *A* by another 6 m or so and place probe *B* between *G* and *A*, and repeat the test. If the three readings are now the same, consider this as the actual ground resistance of station *G*, otherwise shift probe *A* farther away until a constant reading is obtained.

The same test can also be conducted with the help of a battery, voltmeter and an ammeter, as illustrated in Figure 22.8. The voltmeter must now indicate the same reading at all three locations. When *V* becomes constant, read the current *I*. Then the ground resistance

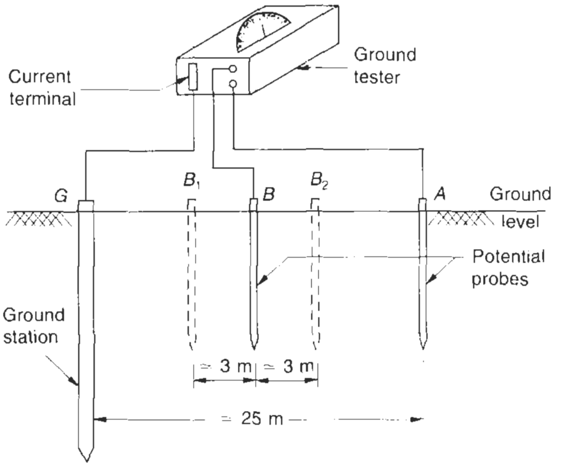

Figure 22.7 Measuring the ground resistance with the help of a ground tester

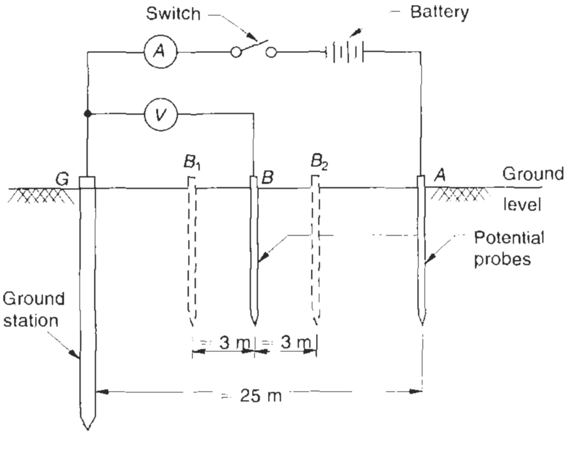

Figure 22.8 Measuring the ground resistance with the help of an ammeter and a voltmeter

$$R_g = \frac{V}{I}\,\Omega$$

22.4 Metal for the grounding conductor

Copper, aluminium, steel and galvanized iron are the most widely used metals for the purpose of grounding. Choice of any of them will depend upon availability and economics in addition to the climatic conditions (corrosion effect) at the site of installation. In Table 22.3 we provide a brief comparison of these metals for the most appropriate choice of the metal for the required application.

22.4.1 Size of the grounding conductor

This is a matter of system design and is different for LT and HT systems, as discussed above. The main criterion when determining the size of the ground conductor is to sustain the rated short-time ground fault current of the system for the required duration, without damage to or permanent deformation of the ground conductor and to limit its temperature rise within permissible limits. It will also limit the voltage drop within 55 volts between any two grounded points with which a human body may come into contact. However, for all practical purposes, the minimum size of conductor as determined below for a required fault level will generally be adequate to limit the voltage drop within the safe limits. For more details refer to IEC 60298.

The ground conductor can be of aluminium, GI or copper, as discussed earlier. A humid or a chemically contaminated location is corroding in nature. Aluminium has a rapid reaction and is fast corroding. At such locations, use of GI or copper conductor would be more appropriate. Table 22.4 suggests the ground conductor sizes for aluminium conductor power cables for small and medium-rating feeders when aluminium is used for the ground

Table 22.3 Comparison of grounding metals

No.	*Characteristics*	*Copper* *1*	*Aluminium* *2*	*Steel* *3*	*Galvanized iron* *4*
1	Conductivity (%)	100 (for annealed copper)	61 (for EC grade aluminium)	30–40 (for copper-clad steel core)	8.5 (for Zn-coated steel)
2	Resistance to corrosion	High. Being cathodic with respect to other metals, which may be buried in the vicinity	Highly corrosive and is, therefore, less preferred compared to other metals, for underground connections or ground electrodes. For surface connections, however, where it is less corrosive and highly conductive, compared to steel or steel alloys it is preferred	Corrosive. Copper-clad steel may be used to overcome this deficiency	High, and is extensively used for ground connections and grids
3	Galvanic effect[a]	Copper is a galvanic metal and causes corrosion, in the presence of moisture, in nearby metals, such as cable sheathes, steel structure and water, gas or drain pipes, buried in its vicinity. With all such metals, it forms a complete electrolytic circuit and corrodes them. Tinning may give protection against its galvanic effects but this is an expensive proposition	The are not galvanic but become anodic in the vicinity of copper and erode		
4	Approximate cost considerations (%)	100	50	10	15 Therefore most appropriate and economical

[a] This occurs when two dissimilar metals in an electrolyte have a metallic tie between them. There is a flow of electricity between the anodic and cathodic metal surfaces, generated by the local cells set between dissimilar metals. One metal becomes an anode and the other a cathode and causes an anodic reaction which represents acquisition of charges by the corroding metal. The anode corrodes and protects the cathode, as current flows through the electrolyte between them.

Table 22.4 Size of aluminium ground conductor for different sizes of power cables for a grounding system

Sr. no.	*Power cable size*	*Ground conductor size*
1	Up to 25 mm^2	Same as the cable size
2	Above 25–50 mm^2	25 mm^2
3	Above 50 mm^2	Approximately half the size of the main cable size. Say, for a 400 mm^2 main cable, a ground conductor of 185 mm^2, will be adequate

conductor. For a GI ground conductor, this size may be roughly doubled.

For large feeders and HT systems the ground fault current would be controlled naturally through the ground circuit impedance and a smaller ground conductor may suffice.

Note
In LT systems, where the neutral is grounded, the neutral as well as the ground conductor may have to carry unbalanced currents up to half the rating of the line currents due to single-phase loads. A ground conductor should also be rated for the same size as the neutral, irrespective of the setting of the relay.

Now equation (22.4) as suggested by BS 7430 will apply, which is based on our discussions in Section 21.3.1, where the ground system is normally predetermined for three times the rated current of the circuit for an HRC fuse-protected system or one and a half times for an over current release-protected system:

$$S = \frac{I_g}{k} \sqrt{t} \qquad (22.4)$$

where

S = cross-sectional area of a bare ground conductor in mm^2.

I_g = r.m.s. value of the ground fault current in amperes

k = r.m.s. current density in A/mm^2. This will depend upon the material of the conductor and its maximum permissible temperature. For more common metals it may have the following values, assuming the initial temperature of the conductor to be 40°C.

Copper	= 205 A/mm^2, assuming the final temperature to be 395°C
Aluminium	= 126 A/mm^2, assuming the final temperature to be 325°C
Steel or GI	= 80 A/mm^2, assuming the final temperature to be 500°C

t = duration of fault in seconds (operating time of the protective device).

Note
For other grounding materials, or hazardous locations requiring a much lower end temperature, refer to BS 7430.

Example 22.4
Consider a power distribution system having the main incoming feeder rated for 400 A and the outgoing feeders rated up to 200 A. To calculate the main ground conductor size, assume that the system is protected through HRC fuses. Then, based on the previous assumptions,

Ground fault current, $I_g = 3 \times 400$

$= 1200$ A

and interrupting time of 400 A HRC fuses, referring to characteristic curves of Figure 21.4 $\simeq$ 60 seconds

$\therefore$ Ground conductor size for an aluminium conductor

$$S = \frac{1200}{126} \sqrt{60}$$

$$\simeq 74 \text{ mm}^2$$

i.e. 25 mm × 3 mm $\left(1'' \times \frac{1}{8''}\right)$

or any other cross-section of an equivalent area.

If the conductor is of GI then,

$$S = \frac{1200}{80} \sqrt{60}$$

or $\simeq$ 116 mm^2

or 25 mm × 5 mm $(1'' \times \frac{1}{4}'')$

or any other cross-section of an equivalent area.

It could similarly be calculated for the individual outgoing circuits, or considered equivalent to half the cable size being used to feed the circuit.

Example 22.5
If a distribution system is fed from a 1600 kVA, 11 kV/415 V, transformer, then

$$I_r = \frac{1600 \times 1000}{\sqrt{3} \times 415} \text{ A}$$

$$= 2225 \text{ A}$$

If the system is protected through overcurrent releases, then applying the same assumptions as before:

Ground fault current, $I_g = 1.5 \times 2225$ A

and the maximum tripping time at this current, referring to characteristics curves of Figure 21.3.

= 370 seconds

$\therefore$ Ground conductor size for an aluminium conductor

$$S = \frac{1.5 \times 2225}{126} \sqrt{370}$$

$$= 509.5 \text{ mm}^2$$

or 100 mm × 5 mm

or 100 mm × 6 mm

or any other cross-section of an equivalent area.

If the conductor is of GI then

$$S = \frac{1.5 \times 2225}{80} \sqrt{370}$$

$$\simeq 802.5 \text{ mm}^2$$

or 80 mm × 10 mm or

any other cross-section of an equivalent area.

22.5 Jointing of grounding conductors

As discussed in Section 29.2.5, jointing of two different metals (copper being one) causes electrolysis at the joints, leading to corrosion and failure of the joint. To avoid this, it is recommended that the same procedure be adopted as discussed in Section 29.2, and where the electrode and the connecting ground strip are of the same metal, that the joints are riveted or welded with the same metal after making the surface. Soldering is not recommended.

22.6 Maintenance of grounding stations

To ensure that a grounding station has not deteriorated and its ground resistance has not increased due to soil depletion it is mandatory to carry out a few checks periodically to ascertain the resistance of the grounding station. If the ground resistance is found more than it was designed for, it is possible that by proper moistening of the soil or by adding more salts or chemicals to the grounding pit, the desired level of ground resistance is achieved once more. If not, then additional grounding stations may have to be installed to obtain the original level of the ground resistance.

SECTION II

22.7 Grounding practices in a power generating station

This is a vast subject, on which extensive research has been done by many authors over the years. The grounding stations in such areas are normally spread over the entire station, and sometimes may even extend beyond its boundary to achieve the desired results. Here we discuss briefly, the basic criteria behind the requirement of a grounding system in a power station and its design considerations.

The magnitude of ground voltage in such areas in the event of a ground fault is very high, due to high system voltage. On a ground fault, the ground path resistance may become a source of a high potential gradient across the grounding conductors at a particular location. It may become high enough to prove fatal to a human operator coming into contact with it. To limit this potential difference at all locations within a tolerable value and achieve an equipotential distribution of a ground conductor over the station is the basic criterion on which is based the design of a grounding system for a power generating station. Our discussion is also applicable to outdoor switchyards and large sub-stations. For detailed working, it is advisable to refer to IEEE-80.

The following basic data are important for the design of such a grounding system.

22.8 Tolerable potential difference at a location

We discussed in Section 21.1.1 the maximum tolerable currents through a human body and their duration. The potential difference in a ground conductor at any point where a human body may come into contact with it during the course of a ground fault should be such that the resultant current through the human body will remain within these tolerable limits.

22.9 Voltage gradients

The likely positions, in which a human body may come into contact with a phase or a ground conductor, and the corresponding potential differences, that he may be exposed to, are illustrated in Figure 22.9.

22.9.1 Tolerable step voltage, E_s

This is the difference in the surface potential to which a human body may be subject when bridging a distance of 1 metre on the conducting ground through the feet without being in contact with any other conducting grounded surface (position 1, Figure 22.9).

The safe step voltage, E_s, should not be more than the total resistance to ground through the body, R_{2fsb} (Section 22.10.1) × safe body current, I_b, as a function of time, where

$R_{2fsb} = 6 \cdot C_s \cdot \rho_s + 1000\ \Omega$ (from equation (22.10), discussed later)

and $I_b = \dfrac{0.116}{\sqrt{t}}$ for a 50 kg body, as in equation (21.2)

$= \dfrac{0.157}{\sqrt{t}}$ for a 70 kg body, as in equation (21.3)

$$\therefore\ E_{s(50)} \leq (6 \cdot C_s \cdot \rho_s + 1000) \times \frac{0.116}{\sqrt{t}} \text{ for a 50 kg body} \tag{22.5}$$

$$\text{and } E_{s(70)} \leq (6 \cdot C_s \cdot \rho_s + 1000) \times \frac{0.157}{\sqrt{t}} \text{ for a 70 kg body} \tag{22.6}$$

22.9.2 Tolerable touch voltage (E_t)

This is the potential difference between the ground potential rise (GPR) and the surface potential at a point where the person is standing on the conducting ground with one hand in contact with a conducting grounded surface (position 2, Figure 22.9). The safe touch voltage, E_t, should not be more than the total resistance to ground through the body, R_{2fps} (Section 22.10.1) × safe body current, I_b, as a function of time, where

$R_{2fps} = 1.5\ C_s \cdot \rho_s + 1000\ \Omega$ (from equation (22.11) discussed later)

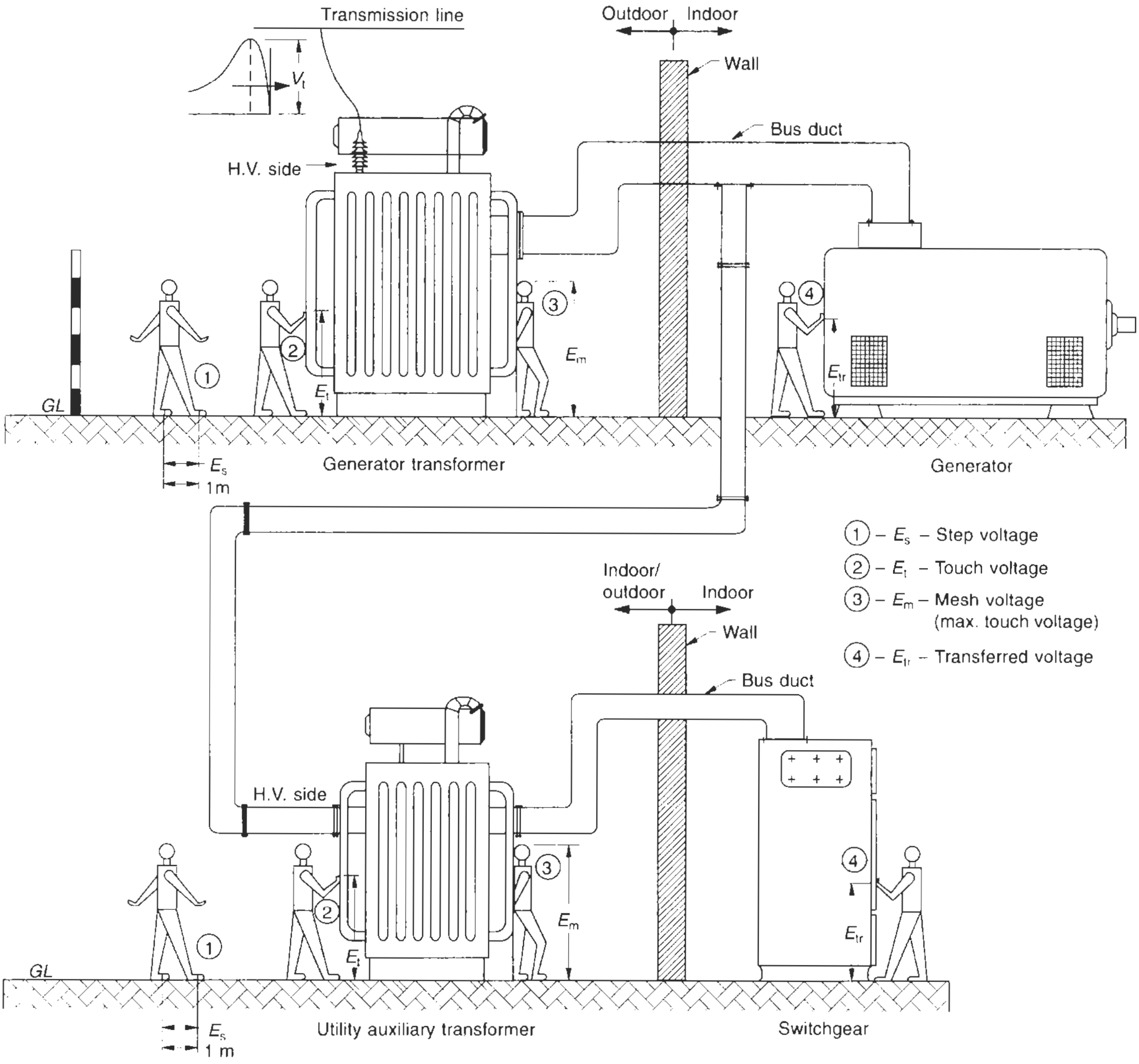

Figure 22.9 Likely positions in which a human body may come in contact with phase and the ground conductors and the corresponding voltage gradients (illustrated through the layout of Figure 13.21)

$$E_{t(50)} \leq (1.5\ C_s \cdot \rho_s + 1000) \times \frac{0.116}{\sqrt{t}}$$

for a 50 kg body (22.7)

$$\text{and } E_{t(70)} \leq (1.5\ C_s \cdot \rho_s + 1000) \times \frac{0.157}{\sqrt{t}}$$

for a 70 kg body (22.8)

Of the safe step and touch voltages, the requirement of the safe touch voltage E_t is more stringent. These are basic design parameters, which will decide the required size of ground mat and the design of mesh. In all our future assumptions, we consider the average weight of a human body to be 70 kg.

22.9.3 Mesh voltage or safe design voltage (E_m)

This is the maximum touch voltage of a grounding station that may occur under the worst situation (position 3, Figure 22.9). The design of the grounding station must ensure that in actual service this voltage does not exceed the permissible tolerable limits noted in Section 22.9.6.

22.9.4 Ground potential rise (GPR)

This is the maximum voltage, that a station grounding grid (ground mat) may attain relative to a remote ground en route to the grounding network considered to be at the potential of the remote ground. In normal conditions the grounded grid potential may be regarded as zero, except transferred voltages and surge pilferages that may be caused during a transient state (Section 18.5.2). During a ground fault the current will flow through the grounding grid and cause its potential to rise with respect to a remote ground. This voltage rise is seen to go up to 25 kV, but generally not beyond 10 kV (IEEE 367) and can be expressed by

$$\text{GPR} \propto I_g \cdot R_g$$

where I_g = fault current through the grounding grid
and R_g = grid resistance at the station grounding grid, with respect to the remote ground.

The larger the grounded grid area, the lower will be the grid resistance, and the lower the GPR and the mesh voltage.

22.9.5 Transferred voltage (E_{tr})

This may also be considered to be a type of touch voltage where the voltage may be transferred into a switchyard or a generating area as a result of a ground fault somewhere in the power network in one of the supply sources and a person standing in the local area of one grid station comes into contact with a grounded conducting part, grounded at a remote grid station or vice versa (position 4, Figure 22.9). In such a situation, if a ground fault occurs, the potential to ground may exceed the full GPR of the local grounding grid where the person is standing. The transferred voltage may exceed the sum of the two GPRs of the two grounding grids, due to the induced voltages in the steel structures, neutral wires and metallic pipes in the vicinity. It is not practical to make provisions for such an eventuality in the design of a station grounding grid. To safeguard a human body from such voltages, IEEE 80 has recom-mended providing isolating devices, surge arresters or display danger boards at suitable locations. For more details, refer to this Standard.

22.9.6 Design parameters

There are a few important parameters that must be determined before beginning the detailed engineering of a grounding station.

Maximum ground grid current and its duration

This is the maximum grid ground fault current, I_G, that may occur during the lifetime of the power plant. It may increase to the sum of two GPRs as noted above, i.e. up to 80 kA or even higher (IEEE 367). For system fault levels refer to Table 13.10. It is advisable to carry out fault current studies every few years to assess the actual fault level compared to those considered at the time of designing the grounding system. It is possible that the generating capacity of the power station and so also its fault level has increased with time.

t_s – duration of fault. Typical values may range between 0.25 and 1.0 s

t_{s1} – shock duration. The value may be considered by keeping a safety margin in the allowable body current and its duration. In an automatic reclosure power system, reclosure after a ground fault is common practice in modern power systems. This may result in repeat shocks in quick succession to a human body coming into contact with the ground conductor. Although this situation may last for less than 0.5 s, it may prove fatal. A reasonable allowance for such an eventuality should be made when deciding on the clearing time.

Since a switchyard is normally connected to more than one supply system, the ground fault current in a power station is contributed by the power plant as well as by the switchyard and the transmission networks. The following possibilities may arise:

1 When there is a fault in the local generating area (Figure 22.10(a)) the return path will be through the grounded neutral of the generator. The switchyard's other remote power sources may also contribute to

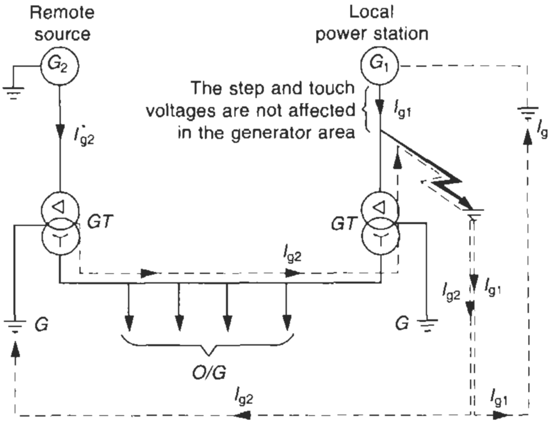

*I_{g2} will exist only if the source is grounded star
[If it is Δ or isolated neutral I_{g2} = 0]

(a) Fault at the local area

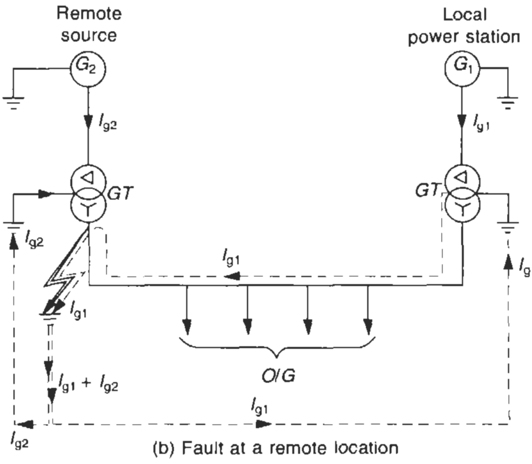

(b) Fault at a remote location

Figure 22.10 Contribution to ground fault currrent by other supply sources when more than one system is operating in parallel this fault as illustrated, provided that they are grounded star. An isolated star or delta-connected source will remain unaffected by remote faults. See also Table 13.5 for more clarity. The step and touch voltages in the generator area will not be affected. The GT (generator transformer) area and the nearby steel structures will develop high step and touch voltages.

2 Similarly, when a fault occurs some distance from the generating area, this area will feed the remote fault as did the remote sources in the generator area in the previous case, thus, developing step and touch voltages in the GT area (Figure 22.10(b)).

The flow of circulating currents in the grounding conductors or ground of region two caused between two or more interconnected grounding stations, for a fault occurring in region one is termed the telluric effect.

3 When the generator and the switchyard grounding mats are interconnected the ground fault current will divide between the two, depending upon their ground resistances, in inverse proportions (Figure 22.11) such that

$$I_g = I_{g1} + I_{g2}$$

and $$I_{g1} = \frac{I_g \cdot R_g}{R_1}$$

and $$I_{g2} = \frac{I_g \cdot R_g}{R_2}$$

where $$R_g = \frac{R_1 \cdot R_2}{R_1 + R_2}$$

For the grounding grid to remain effective over long years of operation, in view of existing ground parallel paths provided by other grounding stations in the vicinity and expansion of the power system in future, more meticulous design would also consider the following factors:

- Resistance of the grounding grid
- Division of the ground fault current, I_g, between the other parallel ground paths
- The decrement factor to account for future expansion, if any, and
- The asymmetry (d.c. component, Section 13.4.1(18)).

$$\therefore I_G = I_g \cdot D_f \tag{22.9}$$

where

I_G = maximum ground fault current

I_g = symmetrical ground fault current

D_f = decrement factor

Safe design voltage

Of all the grounding grid voltages derived above, the mesh voltage or the maximum touch voltage, E_m, must fall within the safe limits and it forms the basic design parameter. The design of the grounding system must ensure that on a ground fault the actual touch voltage E_m will not exceed the maximum tolerable touch voltage E_t mentioned above. An ideal design would mean a potential difference in the range 65–130 V. For illustration, a graph is drawn of E_t versus time, as shown in Figure 22.12, assuming that there is no crushed rock and $\rho_s = 0$. The graph reveals that a human body weighing 50 kg can endure a shock voltage of 65 V for almost 3.2 s and 130 V for almost 0.8 s. Similarly, a body weighing 70 kg can endure a shock voltage of 65 V for almost 5.8 s and 130 V for almost 1.46 s. A higher touch voltage than 130 V would require a yet faster isolation of the fault.

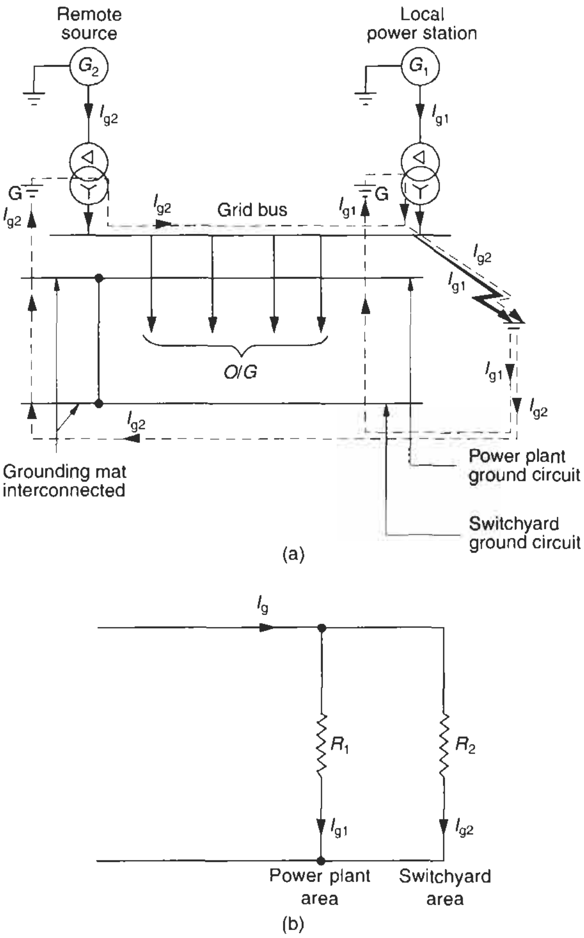

I_g = Total symmetrical fault current

I_{g1} = Fault current shared by the power plant area

I_{g2} = Fault current shared by the switchyard area

R_1 = Resistance of the power plant ground circuit

R_2 = Resistance of the switchyard ground circuit

Figure 22.11 Sharing of fault current by the power plant and the switchyard areas

22.10 Determining the leakage current through a body

22.10.1 Body resistance

1 The proportion of the leakage current through a human body will depend upon the resistance of the body

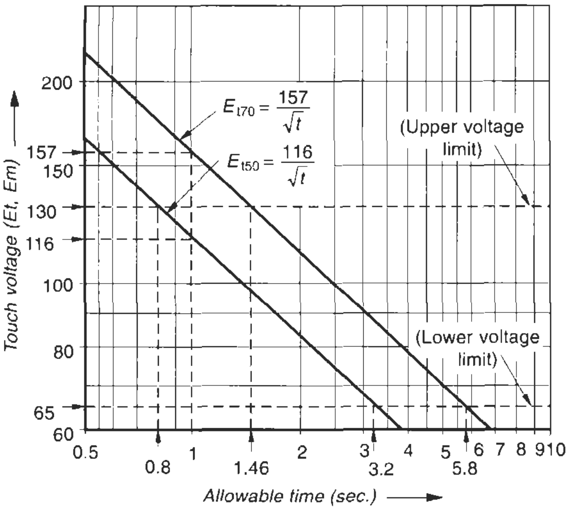

Figure 22.12 Limits of touch voltages as a function of time

compared to the resistance through the ground. To determine the likely body current it is therefore essential to determine the average body resistance. On this subject many studies have been made and the following data established (Figure 22.13):

a = resistance hand to hand = 2300 Ω
b = resistance hand to feet = 1130 Ω
(A leather shoe is considered as a part of the body)
c = resistance between the two feet = 1000 Ω

It is observed that the body's resistance diminishes at higher voltages, above 1 kV and currents more than 1 A, passing through the body, due to a puncture of the skin tissues. For all safety measures and ground design consideration, the average human body resistance is considered universally, as 1000 Ω which has yielded satisfactory results.

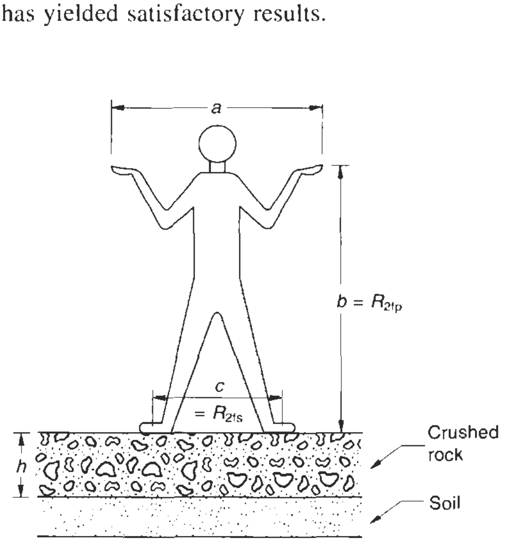

Figure 22.13 Resistances of different body parts

2 To determine the total resistance of the ground circuit through the human body, the following may be adopted.

R_{2fs} = resistance between the two feet in series
R_{2fp} = resistance between the two feet in parallel

There are many formulae to determine the above, all leading to almost the same results. The most adopted, assuming a layer of crushed rock (gravel) over the ground surface, is expressed by

$$R_{2fs} = 6 \cdot C_s \cdot \rho_s$$

and total touch resistance R_{2fsb} through the body

$$R_{2fsb} = 6 \cdot C_s \cdot \rho_s + R_b$$
$$= 6 \cdot C_s \cdot \rho_s + 1000 \quad (22.10)$$

and $R_{2fp} = 1.5 \times C_s \cdot \rho_s$

and total step resistance, R_{2fps}, through the body

$$R_{2fps} = 1.5 \times C_s \cdot \rho_s + R_b$$
$$= 1.5 \times C_s \cdot \rho_s + 1000 \quad (22.11)$$

where R_b = body resistance
$\simeq$ 1000 Ω

C_s = reduction factor for derating the nominal value of surface layer resistivity, corresponding to a crushed rock layer of thickness h_s and a reflection factor k

where

$$k = \frac{\rho - \rho_s}{\rho + \rho_s}$$

and

ρ = ground resistivity in Ωm
ρ_s = crushed rock (gravel) resistivity in Ωm

Note

To achieve a high contact resistance as a measure to provide higher safety to personnel working in the power plant and switchyard areas, common practice is to spread a layer of concrete or crushed rocks (gravel) over the finished ground surface. In the power plant area, a layer of concrete (150–300 mm, depending upon the station voltage) is spread to provide a resistivity of nearly 500 Ωm or more. In the switchyard area, a layer of crushed rocks is spread (75–150 mm) to provide a resistivity of nearly 2500–3000 Ωm or more. The value of C_s can be read from the h_s versus K curves provided by IEEE 80, as in Figure 22.14.

Example 22.6

Consider a large sub-station grounding system, having a layer of crushed rock, 150 mm thick at the surface, having a resistivity of 3000 Ωm and the soil resistivity of 150 Ωm:

$$\therefore\ k = \frac{150 - 3000}{150 + 3000} = -\frac{2850}{3150}$$

$$= -0.90$$

$\therefore$ C_s from Figure 22.14, corresponding to a rock surface of 150 mm

$\simeq$ 0.7

$\therefore$ Ground resistance between the two feet in series

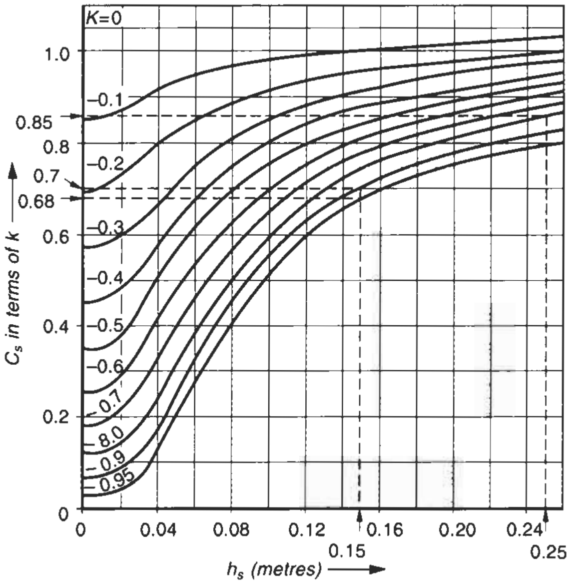

Figure 22.14 Reduction factor C_s as a function of reflection factor K and thickness of crushed rock (gravel) h_s

$$R_{2fs} = 6 \times 0.7 \times 3000$$
$$= 12\,600\ \Omega$$

and in parallel

$$R_{2fp} = 1.5 \times 0.7 \times 3000$$
$$= 3150\ \Omega$$

Having determined the actual ground loop resistance through the body, one can find the ground leakage current that may flow through a human body during an actual ground fault under different body touch conditions with the grounding grid.

For example, referring to Example 22.9 and Table 22.6, the safe touch voltage, E_t, in the power plant area is estimated at 267 V. For this voltage, the leakage current, I_ℓ, through the two feet when in parallel which is a more severe case,

$$I_{g\ell} = \frac{E_t}{R_{2fp}}$$
$$= \frac{267}{3150} \times 1000\ \text{mA}$$
$$= 84.76\ \text{mA}$$

22.10.2 Ground resistance

The ground resistance is a function of the area occupied by the grounding station and the stratification of the soil. The stratification of the soil is usually of a non-uniform nature and may vary the resistivity of soil vertically as well as horizontally, thus varying the resistance of soil. The minimum value of ground resistance (resistance of the grounding station) at a certain depth h from the ground surface may be expressed by

$$R_g = \frac{\rho}{4} \cdot \sqrt{\frac{\pi}{A}} + \frac{\rho}{L} \qquad (22.12)$$

where

$\frac{\rho}{4}\sqrt{\frac{\pi}{A}}$ = ground resistance at the surface of the soil

and

$\frac{\rho}{L}$ = ground resistance of the total buried length (L) of the conductors

R_g = station ground resistance in Ω

ρ = average resistivity of soil in Ωm
This will depend upon the condition of the soil and its moisture content. This is why it is usually high where the moisture content is less than 15% of the weight of soil. The variation in soil resistivity is, however, low when the moisture content exceeds 22%.

A = area of the grounding grid

(i) in a rectangular grid

$A = a \cdot b$ m^2 (Figure 22.15)

where

a = length of the grid in m and
b = width of the grid in m

(ii) In a circular grid

$A = \pi \cdot r^2$ m^2

where

r = radius of the grid in m
L = total length of the buried conductors in m
= $L_c + L_r$ (see also Section 22.14.4)
L_c = total length of conductors, used in the grid in m
and L_r = total length of the grounding rods in m

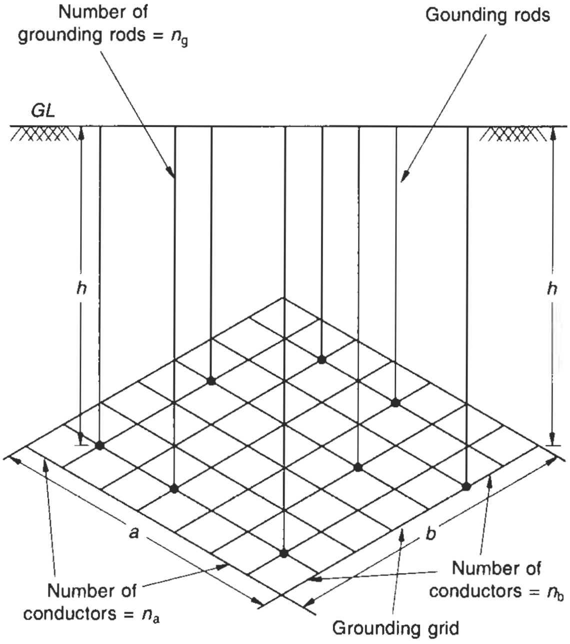

h – Average depth of grid below the ground surface

Figure 22.15 Area of a grounding grid and length of buried conductors

If there are n_a number of conductors lengthwise and n_b widthwise and n_g = number of grounding rods used in a grounding grid at a depth of h, then the total length of the buried conductors

$$L = n_a \cdot b + n_b \cdot a + n_g \cdot h \text{ metres} \qquad (22.13)$$

With an increase in the length of the buried ground conductors, the value of their ground resistance diminishes. It has been found that equation (22.13) is more accurate for a grid depth up to 250 mm. At greater depths of station grids, a more accurate representation is found in the following equation:

$$R_g = \rho\left(\frac{1}{L} + \frac{1}{\sqrt{20A}}\left(1 + \frac{1}{1 + h\sqrt{20/A}}\right)\right) \qquad (22.14)$$

22.11 Measuring the average resistivity of soil

It is important to determine the average resistivity of soil at every site where a grounding station is to be located. To do this, a soil test is essential. For this, samples may be collected from a number of nearby locations at the site to arrive at an average value. As a result of soil stratification, samples must be collected at different depths to ascertain variation in the resistivity to decide on a suitable depth for the grounding grid. For simplicity, Tables 22.1 and 22.2 suggest the likely average range of resistivity for different kinds of soils and their moisture conditions.

A simple way to measure the resistivity of soil is a four-pin method in which four probes are drilled into the ground along a straight line at equal distances a and depth b. Then a voltage V is applied to the two inner probes and a current, I_g, is measured in the two outer probes (Figure 22.16). This test can also be conducted with the help of a ground tester as discussed in Section 22.3, which normally also has a provision for this test.

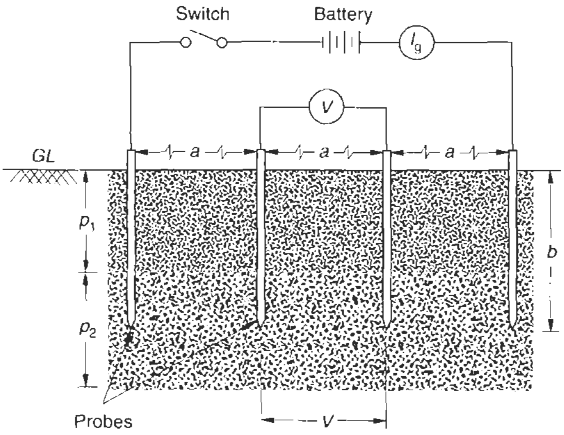

For accurate results keep $b \le \frac{a}{20}$

Figure 22.16 Measuring the resistivity of soil

The soil resistance

$$R_g = \frac{V}{I_g}$$

and
$$\rho = \frac{4\pi \cdot a \cdot R_g}{1 + \frac{2a}{\sqrt{a^2 + 4b^2}} - \frac{a}{\sqrt{a^2 + b^2}}}$$

Since generally

$$a >> b\left(\text{for accurate results keep } b \le \frac{a}{20}\right)$$

$$\therefore \rho \simeq 2\pi a R_g \qquad (22.15)$$

The current tends to flow near the surface for smaller probe spacing and deeply through the soil for larger spacing. As the soil resistivity may vary widely, it is recommended that a wider assessment of the soil strata be made by varying the probe spacing a and thus determining the variation in soil resistivity at the location of the grid. The reflection factor, k, as noted below, forms an important parameter in the evaluation of a more accurate resistivity of soil where

$$k = \frac{\rho_2 - \rho_1}{\rho_2 + \rho_1}$$

and ρ_1 = resistivity of the upper larger strata of soil and
ρ_2 = resistivity of the lower larger strata of soil

22.12 Improving the performance of soil

22.12.1 Conductivity

The use of salts such as magnesium, copper sulphate or calcium chloride in the vicinity of the ground grid may improve the conductivity of the soil.

22.12.2 Soil moisture and contact resistance

Ground or crushed rock coverings, about 80–150 mm thick, are useful to slow the evaporation of soil moisture and hence retain the moisture of the topsoil layers. It will also diminish the intensity of shock currents due to higher contact resistance between the feet and the soil. Typical values may vary from 1000 to 5000 Ωm.

22.13 Determining the ground fault current

Based on IEEE-80 recommendations, the following simplified formula may be used to determine the zero sequence current in the event of a phase to ground fault:

$$I_0 = \frac{V_\ell}{\sqrt{3} \cdot [Z_1 + Z_2 + Z_0]}$$

where

I_0 = symmetrical r.m.s. value of the zero sequence fault current

V_ℓ = line voltage

Z_1 = positive sequence equivalent system impedance, Ω/phase at the location of the fault

Z_2 = negative sequence equivalent system impedance, Ω/phase at the location of the fault.

Z_0 = zero sequence equivalent system impedance, Ω/phase at the location of the fault.

It is also possible to estimate this, if the system unit impedance is known, when the maximum fault current

$$I_{sc} = \frac{\text{Full load current of the system}}{\text{Unit impedance of the system}}$$

$$= \frac{I}{Z_p} \times 100\% \qquad (13.5)$$

Example 22.7

Consider a switchyard receiving power from three of 200 MVA, 15.75 kV generating sources, having an impedance of 16 ± 10% each and feeding the transmission lines through 15.75/132 kV, 250 MVA generator transformers (Figure 22.17) with an impedance of 14 ± 10% each (Table 13.8).

Considering the system fault level at 32.8 kA, calculate the ground fault contribution by the generating units;

In this case the sources feeding the fault are generators and not generator transformers (GTs). The GTs are only current limiters and introduce their reactances into the circuit. Since the ratings of the generators and the GTs are different, it is mandatory to first convert them to a common base, say, 200 MVA in this case. Therefore the combined unit impedance of each generator and the GT at point *B*, considering the lower value of the impedances to be on the safe side,

$$= (16 - 1.6) + (14 - 1.4)\frac{200}{250}$$

$$= 14.4 + 10.08$$

$$= 24.48\%$$

Since all three generators are operating in parallel, the impedance of each circuit, as calculated above, will fall in parallel and the equivalent impedance will become

$$\frac{1}{Z_{eq}} = \frac{1}{24.48} + \frac{1}{24.48} + \frac{1}{24.48}$$

$$\text{or} \quad Z_{eq} = \frac{24.48}{3}$$

or 8.16% (0.0816 p.u.)

Full load current at base MVA

$$I_{f(base)} = \frac{200}{\sqrt{3} \times 132}$$

$$= 0.875 \text{ kA}$$

$$\therefore \quad I_g = \frac{0.875}{0.0816}$$

$$= 10.72 \text{ kA}$$

Since the system fault level is 32.8 kA, the ground fault contribution by the other sources connected on the grid

$$= 32.8 - 10.72$$

or 22.08 kA

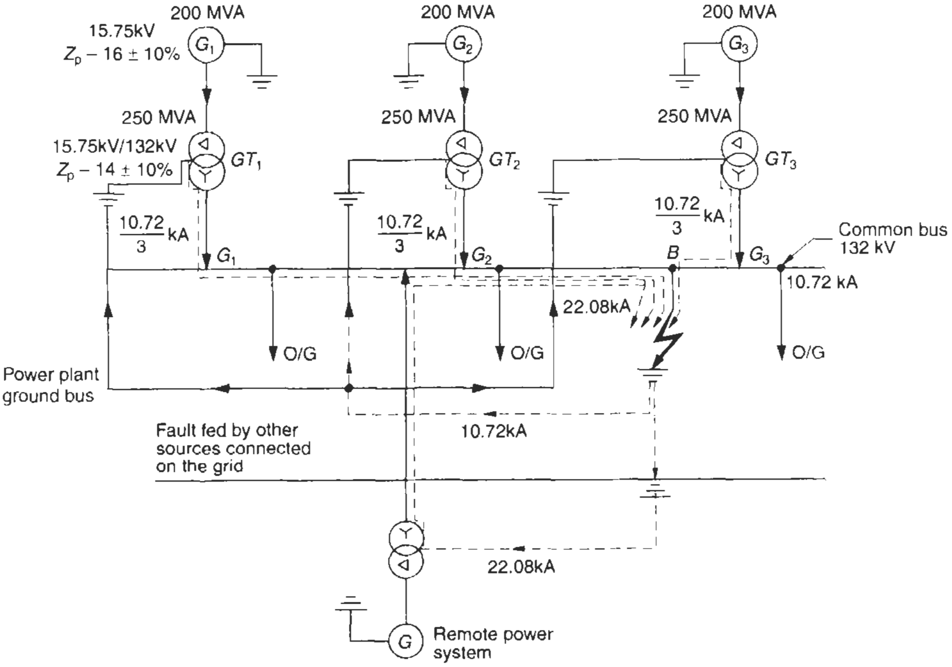

Figure 22.17 Illustration of Example 22.7

22.14 Designing a grounding grid

22.14.1 Minimum size of grid conductors

This can be calculated from the formula derived by Sverak and recommended by IEEE-80:

$$A = \frac{I_g}{\sqrt{\frac{T_{cap} \cdot 10^{-4}}{t \cdot \propto_{20} \cdot \rho_{20}} \cdot \log_e \frac{K_0 + t_{max}}{K_0 + t_{amb}}}} \tag{22.16}$$

where

A = cross-sectional area of ground conductor in mm^2

I_g = ground fault current in kA (r.m.s.)
This may be substituted with the estimated maximum ground grid current, I_G (Section 22.9.6), that may occur during the life of the grounding station

T_{cap} = thermal capacity factor from Table 22.5, in J/cm^3/°C. This is derived from formula (4.184) $\rho_h \cdot \rho_s$ in Ws/cm^3/ °C (for details refer to IEEE-80)

ρ_h = specific heat of ground conductor in Cal/gram/ °C

ρ_s = specific weight in g/cm^3

t = duration of fault in seconds

$\propto_{20}$ = thermal coefficient of resistivity at a reference temperature of 20°C

ρ_{20} = resistivity of ground conductor at a reference temperature of 20°C in $\mu\,\Omega$/cm

K_0 (at 0°C) = reciprocal of $\propto_0$

$= \frac{1}{\propto_{20}} - 20$

t_{max} = maximum allowable temperature in °C

t_{amb} = ambient temperature in °C

Typical values of the above constants for the most widely used metals are given in Table 22.5, based on IEEE-80.

22.14.2 Corrosion factor

Corrosion takes place in all metal conductors located in a humid environment, ground electrodes, being one example. It is therefore mandatory that certain corrosion margins are considered when choosing the size of ground electrodes to account for this in the long run, particularly during the considered life span of the generating station, switchyard or sub-stations. Handbooks on corrosion suggest likely corrosion depths. For steel this is considered to be around 2.2% per year. For GI it will be much less. Considering economics of steel over GI it is a common practice to use only steel for such extensive and elaborate grounding stations. For steel grids, the depth of corrosion in 12 years is estimated to be around 3.48 mm in a soil having a pH value of 7.4. This figure can be used to determine the depth of corrosion for any number of years. Consider-ing the lifespan of a power generating station as 40 years, the depth of corrosion during this period would be

$$= \frac{3.48\left(\frac{1}{1} + \frac{1}{2} + \frac{1}{3} + \ldots \frac{1}{40}\right)}{\left(\frac{1}{1} + \frac{1}{2} + \frac{1}{3} + \ldots \frac{1}{12}\right)}$$

$$= \frac{3.48 \times 4.2785}{3.1032}$$

$$= 4.8 \text{ mm}$$

This amount of corrosion will occur on each side of the electrode,

$\therefore$ total corrosion during a span of 40 years of operation

$$= 2 \times 4.8$$

$$= 9.6 \text{ mm}$$

This is an average value of metal erosion during the length of service and may vary with soil conditions. In coastal areas, for instance, where the subsoil water is saline, erosion of metal would be much more rapid and a further safety factor must be considered. Field experience will be a better guide to assess this.

22.14.3 Maximum touch and step voltages of a grounding station

In Section 22.8 we discussed the tolerable step and touch

Table 22.5 Material constants

Description	*Conductivity* %	α_{20}	$K_0 = \left(\frac{1}{\propto_{20}} - 20\right)$	t_{max}, *Fusing temperature* °C	ρ_{20} $\mu\Omega$/cm	T_{cap} J/cm^3/°C
Standard annealed soft copper wire	100.0	0.00393	234	1083	1.7241	3.422
Commercial hard drawn copper wire	97.0	0.00381	242	1084	1.7774	3.422
Copper-clad steel core wire	40.0	0.00378	245	1084/1300	4.397	3.846
Copper-clad steel core wire	30.0	0.00378	245	1084/1300	5.862	3.846
Commercial EC aluminium wire	61.0	0.00403	228	657	2.862	2.556
Aluminium alloy wire 5005	53.5	0.00353	263	660	3.2226	2.598
Aluminium alloy wire 6201	52.5	0.00347	268	660	3.2840	2.598
Aluminium-clad steel core wire	20.3	0.00360	258	660/1300	8.4805	2.670
Zinc-coated steel core wire	8.5	0.00320	293	419/1300	20.1	3.931
Stainless steel No. 304	2.4	0.00130	749	1400	72.0	4.032

Refer to Figure 22.18 giving the nomograms for more widely used metals to determine the size of conductor A in terms of duration of fault.

Example 22.8

To determine the minimum size of ground conductor, consider a station grid made of Z_n coated steel, having the following parameters:

Parameters	*As in IEEE-80*	*As in IS 3043*
I (A)	1 or 0.001 kA (to calculate a generalized factor in mm^2/A)	1 or 0.001 kA (to calculate a generalized factor in mm^2/A)
t(s)	1	1
$\propto_{20}$	0.0032	0.0045
ρ_{20}($\mu\Omega$/cm)	20.1	13.8
T_{cap}(J/cm^3/°C)	3.931	3.8
t_{max} (°C)	419	450
t_{amb}(°C)	40	40
K_0	$\frac{1}{0.0032} - 20$ = 293 (Table 22.5)	$\frac{1}{0.0045} - 20$ = 202
	$\therefore A = \frac{0.001}{\sqrt{\left(\frac{3.931 \times 10^{-4}}{0.0032 \times 20.1}\right) \log_e \left(\frac{293 + 419}{293 + 40}\right)}}$ $= \frac{0.001}{\sqrt{0.0061 \log_e 2.14}}$ $= \frac{0.001}{\sqrt{0.0061 \times 0.76}}$ = 0.0147 mm^2/A or $\frac{1}{0.0147}$ = 68 A/mm^2	$\frac{0.001}{\sqrt{\left(\frac{3.8 \times 10^{-4}}{0.0045 \times 13.8}\right) \log_e \left(\frac{202 + 450}{202 + 40}\right)}}$ $= \frac{0.001}{\sqrt{0.006 \log_e 2.69}}$ $= \frac{0.001}{\sqrt{0.006 \times 0.99}}$ = 0.0123 mm^2/A or $\frac{1}{0.0123}$ = 81 A/mm^2 Say 80 A/mm^2
For an I_g of 30 kA, size of ground conductor	= 0.0147 × 30 000 = 441* mm^2	= 0.0123 × 30 000 = 369* mm^2

*If a future expansion in the generating capacity of the station is envisaged, the grounding grid conductor size so estimated may be enhanced by a suitable decrement factor, D_f (Section 22.9.6)

voltages that a human body can endure. In actual service these voltages of the grounding station should not exceed the prescribed tolerable limits. The grounding station design as carried out above must therefore be counter-checked for these limits. If it exceeds these limits the station must be redesigned, to contain the actual step and touch voltages within the prescribed levels.

IEEE-80 has suggested the following formulae in terms of ground current and total length of buried conductors to determine the actual step and touch voltages:

$$\text{Max. step voltage } E_s(\text{actual}) = \frac{\rho \cdot K_s \cdot K_i \cdot I_G}{L} \quad (22.17)$$

and mesh or maximum touch voltage E_m(actual)

$$= \frac{\rho \cdot K_m \cdot K_i \cdot I_G}{L} \quad (22.18)$$

where

ρ = resistivity of the soil

K_s, K_m = geometrical factors, depending upon the more important parameters such as area of the grounding grid, its depth and conductor spacing and less important factors, such as diameter of the conductors and the thickness of the finishing surface by concrete or gravel.

The touch voltage diminishes up to 1 m depth of the grid and then rises rapidly. The ideal depth for economic considerations may be taken as 0.5 m when the touch and step voltages are reasonably low.

K_i = corrective factor, accounting for the increase in current densities at the far ends of the grid system, the resistivity of the soil and the average current density per unit length, I_G/L, of buried conductors.

I_G = maximum fault current contributed by the power generating units.

L = total length of the buried conductors of the grounding station (equation (22.13)).

Estimating the step voltage E_s (actual)

In this case

$$K_s = \frac{1}{\pi}\left(\frac{1}{2h} + \frac{1}{D+h} + \frac{1}{D}(1 - 0.5^{n-2})\right)$$

and the maximum step voltage is assumed to occur at a distance equal to grid depth h, where h is more than 0.25 m and less than 2.5 m. Depths less than 0.25 m may be rare:

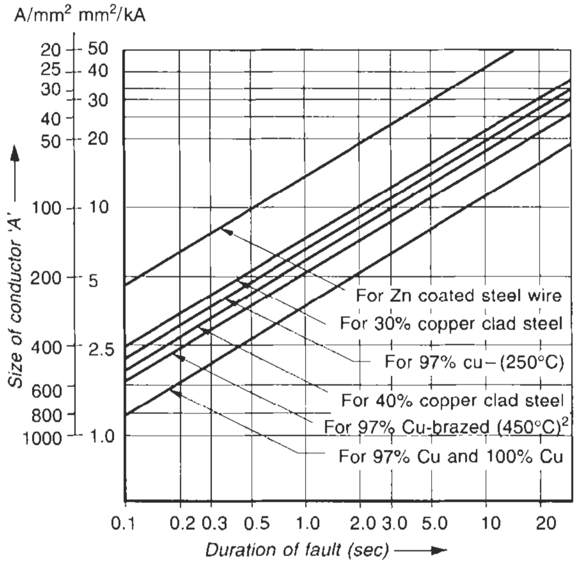

Note

1. For critical installations, $t_{\max}$ is considered as 250°C for annealed copper conductors. At higher temperatures, the annealing may erode.
2. For brazed joints, $t_{\max}$ is considered as 450°C.
3. A more prudent temperature rise may be considered to optimize the use of metal, depending upon the type of jointing, such as by welding (preferably exothermic), bolting, brazing or crimping etc. and their safe operating temperature, over long periods. Soldered joints must be avoided, which may fail under high fault currents because of excessive heat

Figure 22.18 Nomogram for conductor sizing at 40°C ambient temperature

$$K_s = \frac{1}{\pi}\left(\frac{1}{2h} + \frac{1}{D+h} + \frac{1}{D}\cdot W\right)$$

where

$$W = \frac{1}{2} + \frac{1}{3} + \frac{1}{4} + \ldots \frac{1}{n-1}$$

For $n \geq 6$

$$W \simeq \frac{1}{2(n-1)} + \log_e(n-1) - 0.423$$

The step voltage falls sharply at higher depths.

$L = L_c + L_r$ when there are only a few ground rods at the periphery of the grid

or $= L_C + 1.15L_r$ when there are proportionately more ground rods at the far end of the grid

where L_C = total length of the grid conductors and
L_r = total length of the ground rods

The factor 1.15 represents the higher current density in the ground rods that are placed at the far ends or periphery of the grid. The ground current discharging through a uniformly spaced ground grid is scanty at the centre, dense at the edges and a maximum at the corners. Accordingly, the worst step and touch voltages would occur at the outer meshes of the grid, especially at the corners. To make the current density more uniform, a more non-uniform conductor spacing would therefore be necessary with more number of meshes at the centre and fewer towards the periphery. Increasing the number of meshes, i.e. reducing the conductor spacing, would tend to reduce the step and touch voltages until a saturation stage is reached, i.e. when, L_r approaches L_C. The factor 1.15 may now be increased to 1.2 based on field experience and

$$K_i = 0.656 + 0.172\ n$$

where

n = the number of conductors on each side of a square grid. If the ground grid is not a square and the number of conductors lengthwise is n_a and widthwise n_b, then

$$n = \sqrt{n_a \cdot n_b}$$

Estimating the maximum touch voltage, E_m (actual)

This will largely depend upon the ratio of the current densities in the far-end conductors, i.e. conductors at the periphery, and the innermost conductors and can be expressed as follows, based on extensive research:

$$K_m = \frac{1}{2\pi}\left(\log_e\left(\frac{D^2}{16hd} + \frac{(D+2h)^2}{8Dd} - \frac{h}{4d}\right) + \frac{K_{ii}}{K_h}\log_e\frac{8}{\pi(2n-1)}\right)$$

where

$$K_{ii} = \frac{1}{(2n)^{2/n}}$$

For grids without or with only a few ground rods near the inner grid (not at the far ends):

$$K_h = \sqrt{1 + \frac{h}{h_0}}$$

where h_0 is the reference depth of grid = 1 m

The values of K_i and L can be determined along similar lines to those for the step voltage.

Note
In the above equations for maximum step and touch voltages the best results will be obtained when the following parameters are achieved:

$n \leq 25$

$0.25 \leq h \leq 2.5$ m

$d < 0.25\ h$ and

$D > 2.5$ m

22.14.4 Estimating the value of ground conductor length (L)

Having determined the safe touch voltage E_t (equation (22.8)) the maximum mesh voltage E_m (actual) (equation (22.18)) should be equal to or less than this voltage. Thus by equating these two we can estimate the likely length L of the ground conductors. Considering this for an average human body of 70 kg

$$E_m \text{ (actual)} \le E_{t(70)}$$

$$\text{or} \quad \frac{\rho \cdot K_m \cdot K_i \cdot I_G}{L} \le (1.5\, C_s \cdot \rho_s + 1000) \times \frac{0.157}{\sqrt{t}}$$

$$\text{or} \quad L > \frac{\rho \cdot K_m \cdot K_i \cdot I_G \cdot \sqrt{t}}{(1.5 C_s \cdot \rho_s + 1000) \times 0.157} \qquad (22.19)$$

This is the parameter that will help to decide the size and type of the grounding grid and design of the mesh.

Since there are too many variables and parameters related to a grounding station, the following practical example illustrates a step-by-step procedure to design a grounding station.

Example 22.9

To design a grounding grid, consider a power generating station as shown in Figure 22.19, transmitting power at 400 kV through its own switchyard to another switchyard remotely located.

Size of grounding conductor

Consider GI for grounding, and the same parameters of Section 22.14.1, leading to a minimum size of grounding conductor as 80 A/mm^2, based on IS 3043. Fault level for a 400 kV power station as in Table 13.10 is 40 kA (envisaging no further rise in the fault level. $I_G = I_g$)

$$\therefore \quad A = \frac{40 \times 10^3}{80}$$

$$= 500 \text{ mm}^2$$

If we consider circular conductors then

$$\frac{\pi d^2}{4} = 500$$

$$\text{or} \qquad d = 25.24 \text{ mm}$$

For a power station, assuming a corrosion factor for a lifespan of 40 years as 0.12 mm/year then

Corrosion depth = 2 × 4.8 = 9.6 mm.

$$\therefore \quad \text{minimum } d = 25.24 + 9.6$$

$$= 34.84$$

say, 35 mm

Sharing of ground fault current

Rated current of the power plant

$$I_r = 3 \times \frac{300}{\sqrt{3} \times 400}$$

$$= 3 \times 0.433 \text{ kA}$$

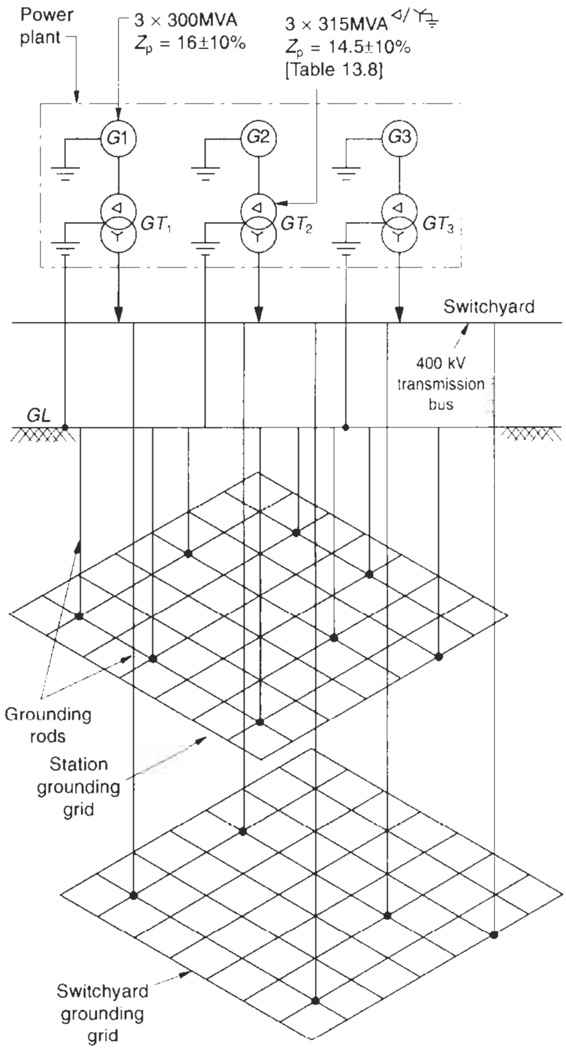

Figure 22.19 General layout of a power plant, station grounding grid, and switchyard grounding grid etc.

$$\therefore \quad I_{g1} = \frac{3 \times 0.433}{(16 + 14.5) \times 0.9} \times 100$$

(considering the lower side of Z_p, to be on the safe side)

$$= 4.73 \text{ kA}$$

$$\text{and} \quad I_{g2} = 40 - 4.73$$

= 35.27 kA as illustrated in Figure 22.20

where

I_{g1} = fault current sharing by the power plant grounding grid

I_{g2} = fault current sharing by the switchyard grounding grid (transmission system)

I_g = total fault current, considered to be 40 kA for a 400 kV system as in Table 13.10.

For ease of understanding, the rest of the working is shown in the form of Table 22.6.

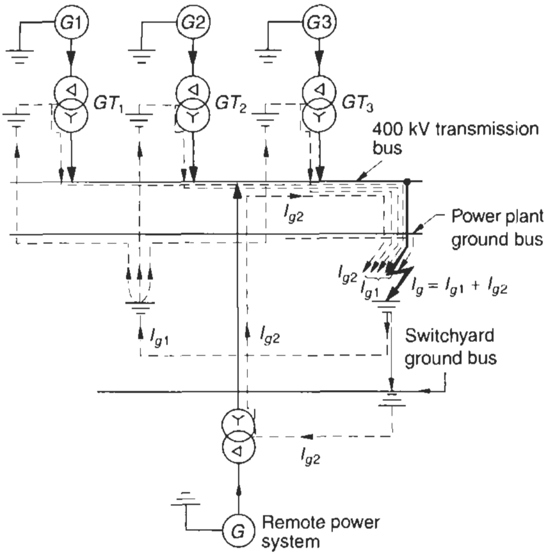

Figure 22.20 A simplified layout of Figure 22.19, illustrating the sharing of fault current by the station grounding grid and the switchyard grounding grid on fault

After the final designs are complete it is recommended that the actual touch E_m (actual) and step voltage E_s (actual) are rechecked for both power plant and switchyard areas separately, to ensure that they are within the tolerable limits as determined above. After the ground stations have been finally installed the actual step and touch voltages must be measured to verify the designs.

Note

The above example illustrates a simple procedure to design a ground mat in a large power generating station, interconnected to external supply sources through a power grid. The procedure would be the same with a large switchyard, receiving and transmitting large powers.

For small power houses, which may be captive and small switchyards or sub-stations, receiving and distributing currents to industrial or domestic loads, such an elaborate design is not required and simple grounding stations as discussed in Section 22.1 will be sufficient.

Table 22.6 Safe (tolerable)potential difference

	(1)	(2)	(3)
Step no.	Parameters	Power plant area	Switchyard area
1 (i)	Soil resistivity, ρ Ωm	70	70
(ii)	Surface resistivity for concrete of thickness h_s as 250 mm, ρ_{s1} Ωm	550	–
(iii)	Surface resistivity for gravel of thickness h_s as 150 mm, ρ_{s2} Ωm	–	2500
2	Duration of fault s (maximum clearing time of the interrupting device)	1.0	1.0
3	Average weight of a human body (kg)	70	70
(A)	∴ Safe touch voltage, $E_t = (1.5\ C_s \cdot \rho_s + 1000) \times \frac{0.157}{\sqrt{t}}$		
	Reflection factor	$k = \frac{70 - 550}{70 + 550}$ $= -\frac{480}{620} = -0.77$	$k = \frac{70 - 2500}{70 + 2500}$ $= -\frac{2430}{2570} = -0.95$
	∴ C_s from Figure 22.14	$C_s = 0.85$	$C_s = 0.68$
	∴ E_t	$= (1.5 \times 0.85 \times 550 + 1000) \times \frac{0.157}{\sqrt{1}}$ $= (701.25 + 1000) \times 0.157$ $= 267$ V	$= (1.5 \times 0.68 \times 2500 + 1000) \times \frac{0.157}{\sqrt{1}}$ $= (2550 + 1000) \times 0.157$ $= 557$ V
(B)	Step voltage, $E_s = (6 \cdot C_s \cdot \rho_s + 1000) \times \frac{0.157}{\sqrt{t}}$	$= (6. \times 0.85 \times 550 + 1000) \times \frac{0.157}{\sqrt{1}}$ $= (2805 + 1000) \times 0.157$ $= 597$ V	$= (6 \times 0.68 \times 2500 + 1000) \times \frac{0.157}{\sqrt{1}}$ $= (10\,200 + 1000) \times 0.157$ $= 1758$ V
4	Ground resistance (Ω) $R_g = \frac{\rho}{4}\sqrt{\frac{\pi}{A}}$ (equation (22.12)) L being large therefore $\frac{\rho}{L}$ is ignored for ease of calculation		
	Assumptions by experience: Area m^2	90 000	120 000
	Ground resistance Ω	$R_{gp} = \frac{70}{4} \cdot \sqrt{\frac{3.14}{90\,000}}$ $= 0.103$	$R_{gs} = \frac{70}{4} \cdot \sqrt{\frac{3.14}{120\,000}}$ $= 0.089$
	Total ground resistance of power plant and switchyard areas interconnected in parallel (recommended practice) where Ω $\frac{1}{R_{gt}} = \frac{1}{R_{gp}} + \frac{1}{R_{gs}}$ and		$R_{gt} = \frac{0.103 \times 0.089}{0.103 + 0.089}$ $= 0.0477$

	(1)		(2)	(3)
	R_{gp} = ground resistance of power plant area R_{gs} = ground resistance of switchyard area R_{gt} = total ground resistance of power plant and switchyard areas in parallel			
5	Fault current sharing by the two ground mats	kA	$I_{g1} = \frac{40 \times 0.0477}{0.103}$ $= 18.54$	$I_{g2} = \frac{40 \times 0.0477}{0.089}$ $= 21.46$
	(i) Due to power plant,	kA	$\frac{4.73 \times 0.0477}{0.103} = 2.19$	$\frac{4.73 \times 0.0477}{0.089} = 2.54$
	(ii) Due to transmission system,	kA	$\frac{35.27 \times 0.0477}{0.103} = 16.35$	$\frac{35.27 \times 0.0477}{0.089} = 18.92$
6	To estimate 'L', to achieve safe potential differences: equation (22.19) $L > \frac{\rho \cdot k_m \cdot k_i \cdot I_G \cdot \sqrt{t}}{\text{Safe touch voltage } (E_t)}$		To determine this, it is necessary that certain assumptions, based on field experience, are made for a possible grounding system and if necessary, further modifications made to arrive at the desired results and design:	
	Assuming the following:			
	• Area of power plant	m^2	90 000	120 000
	• Consider a rectangular grounding mat	m^2	360 × 250	400 × 300
	• Spacing between cross conductors (mesh), both lengthwise and widthwise D, m		12.5	15
	∴ No. of conductors lengthwise and length		$= \frac{360}{12.5} + 1 = 30$	$= \frac{400}{15} + 1 = 28$
		m	$= 30 \times 250 = 7500$	$= 28 \times 300 = 8400$
			$= \frac{250}{12.5} + 1 = 21$	$= \frac{300}{15} + 1 = 21$
	and no. of conductors widthwise	m	$= 21 \times 360 = 7560$	$= 21 \times 400 = 8200$
	and length,		$= \sqrt{30 \times 21} = 25$	$= \sqrt{28 \times 21} = 24$
	and n	K_i	$= 0.656 + 0.172n$ $= 0.656 + 0.172 \times 25$ $= 4.956$	$= 0.656 + 0.172 \times 24$ $= 4.784$
	For $h = 1$ m $d = 0.035$ m	K_{ii}	$= \frac{1}{(2n)^{2/n}} = \frac{1}{(2 \times 25)^{2/25}}$ $= \frac{1}{1.367} = 0.73$	$= \frac{1}{(2 \times 24)^{2/24}}$ $= \frac{1}{1.91} = 0.52$
		K_h	$\sqrt{1 + \frac{h}{h_0}} = \sqrt{1 + 1} = 1.414$	$= \sqrt{1 + 1} = 1.414$
		K_m	$= \frac{1}{2\pi}\left(\log_e\left(\frac{D^2}{16.h.d} + \frac{(D + 2h)^2}{8Dd} - \frac{h}{4d}\right) + \frac{K_{ii}}{k_h} \log_e \frac{8}{\pi(2n - 1)}\right)$	
			$= \frac{1}{2\pi}\left(\begin{array}{l}\log_e\left(\frac{12.5^2}{16 \times 1 \times 0.035} + \frac{(12.5 + 2 \times 1)^2}{8 \times 12.5 \times 0.035} - \frac{1}{4 \times 0.035}\right)\\ + \frac{0.73}{1.414} \log_e \frac{8}{\pi(2 \times 25 - 1)}\end{array}\right)$	$= \frac{1}{2\pi}\left(\begin{array}{l}\log_e\left(\frac{15^2}{16 \times 1 \times 0.035} + \frac{(15 + 2 \times 1)^2}{8 \times 15 \times 0.035} - \frac{1}{4 \times 0.035}\right)\\ + \frac{0.52}{1.414} \log_e \frac{8}{\pi(2 \times 24 - 1)}\end{array}\right)$

(1)		(2)	(3)
		$= \frac{1}{2\pi}\left(\log_e(331.95) + \frac{0.73}{1.414}\log_e 0.052\right)$ $= \frac{1}{2\pi}\left(5.8 + \frac{0.73}{1.414}(-2.96)\right)$ $= 0.68$	$= \frac{1}{2\pi}(\log_e(463.46) + 0.37 \log_e 0.054)$ $= \frac{1}{2\pi}(6.139 + 0.37 \times (-2.92))$ $= 0.80$
∴ Minimum length of conductor required, L	m	$\frac{70 \times 0.68 \times 4.956 \times 18.54 \times 1000 \times 1}{267}$ $= 16{,}392$ $= 7500 + 7560$ $= 15\,060$	$\frac{70 \times 0.80 \times 4.784 \times 21.46 \times 1000 \times 1}{557}$ $= 10\,321$ $= 8400 + 8200$ $= 16\,600$
Length available, L_c	m	The size of ground mat and spacing of cross conductors, assumed above, seem to be acceptable, except for small adjustments. The deficit in ground length of conductors may be made up through vertical ground rods of the same conductors as for the grounding grid. (The resistivity of soil, ρ, at the depth of the ground rods may also be considered the same as at the depth of the ground grid conductors.) For more accurate analysis refer to IEEE-80. In this case consider 150 such rods 10 m in length ∴ $L_T = 10 \times 150$ $= 1500$ m and $L = 15\,060 + 1500$ $= 16\,560$ m	The size of the ground mat and spacings of cross conducto may be economized. The size of the ground grid may reduced and the spacing between the cross conductors increase It would require a re-exercise from step 4 onwards. For brevit this is not being done.

Relevant Standards

IEC	*Title*	*IS*	*BS*
60298/1990	A.C metal enclosed switchgear and controlgear for rated voltages above 1kV and up to and including 52 kV	3427/1991	BS EN 60298/1996
60050-195/1998	Code of practice for earthing and protection against electric shocks	3043/1991	BS 7430/1998 BS IEC 60050-195

Relevant US Standards ANSI/NEMA and IEEE

ANSI/IEEE-37.101/1993	Guide for generator ground protection
ANSI/IEEE81/1983	Guide for measuring earth resistivity, ground impedance and earth surface potentials of a ground system. Part I: Normal measurements
ANSI/IEEE-80/1991	Guide for safety in a.c. substation grounding
ANSI/IEEE-142/1991	Grounding of industrial and commercial power systems (IEEE Green book)
ANSI/IEEE 141/1993	Recommended practice for electric power distribution for industrial plants (IEEE Red book)
ANSI/IEEE 241/1991	Recommended practice for electric power systems in commercial buildings (IEEE Grey book)
ANSI/IEEE 242/1991	Recommended practice for protection and coordination of industrial and commercial power systems (IEEE. Buff book)
ANSI/IEEE-367/1987	Recommended practice for determining the electric power station ground potential rise and inductive voltage from a power fault
C2-1997	National Electrical Safety code (NESC)

Notes

1 In the tables of Relevant Standards in this book while the latest editions of the standards are provided, it is possible that revised editions have become available. With the advances of technology and/or its application, the updating of standards is a continuous process by different standards organizations. It is therefore advisable that for more authentic references, readers should consult the relevant organizations for the latest version of a standard.

2 Some of the BS or IS standards mentioned against IEC may not be identical.

3 The year noted against each standard may also refer to the year of its last amendment and not necessarily the year of publication.

List of formulae used

Resistance to ground:

Plate grounding

$$R = \frac{\rho}{4}\sqrt{\frac{\pi}{2A}}\ \Omega \qquad (22.1)$$

ρ = resistivity of soil in Ωm
A = area of each side of the plate in m^2

Pipe or rod grounding

$$R = \frac{100 \cdot \rho}{2\pi \cdot l} \times \left\{\log_e \frac{8 \times l}{d} - 1\right\} \Omega \qquad (22.2)$$

l = length of pipe in cm
d = internal diameter of pipe in cm.

Strip or conductor grounding

$$R = \frac{100\rho}{2\pi \cdot l} \times \log_e \frac{2 \times l^2}{h \cdot w} + Q \text{ Ohms} \qquad (22.3)$$

l = length of strip or rod in cm
h = depth of strip or rod in cm
w = width of strip or twice the diameter of the conductor rod in cm
Q = –1 for strip and –1.3 for round conductor grounding

Size of the grounding conductor

$$S = \frac{I_g}{k}\sqrt{t} \qquad (22.4)$$

S = cross-sectional area of a bare ground conductor in mm^2
I = r.m.s. value of the ground fault current in amperes
K = a factor that would depend upon the material of the conductor
t = duration of fault in seconds

Tolerable step voltage

$$E_{s(50)} \leq (6 \cdot C_s \cdot \rho_s + 1000) \times \frac{0.116}{\sqrt{t}}$$

for a 50 kg body (22.5)

$$E_{s(70)} \leq (6 \cdot C_s \cdot \rho_s + 1000) \times \frac{0.157}{\sqrt{t}}$$

for a 70 kg body (22.6)

Tolerable touch voltage

$$E_{t(50)} \le (1.5\, C_s \cdot \rho_s + 1000) \times \frac{0.116}{\sqrt{t}}$$

for a 50 kg body (22.7)

$$E_{t(70)} \le (1.5\, C_s \cdot \rho_s + 1000) \times \frac{0.157}{\sqrt{t}}$$

for a 70 kg body (22.8)

Design parameters

$$I_G = I_g \cdot D_f \tag{22.9}$$

I_G = maximum ground fault current
I_g = symmetrical ground fault current
D_f = decrement factor

Body resistance

$$\begin{aligned} R_{2fsb} &= 6 \cdot C_s \cdot \rho_s + R_b \\ &= 6 \cdot C_s \cdot \rho_s + 1000 \end{aligned} \tag{22.10}$$

R_{2fsb} = total touch resistance through the body
R_b = body resistance

and,

$$\begin{aligned} R_{2fps} &= 1.5 \times C_s \cdot \rho_s + R_b \\ &= 1.5 \times C_s \cdot \rho_s + 1000 \end{aligned} \tag{22.11}$$

R_{2fps} = total step resistance through the body
C_s = reduction factor for derating the nominal value of surface layer resistivity, corresponding to a crushed rock layer of thickness, h_s and a reflection factor k

where

$k = \dfrac{\rho - \rho_s}{\rho + \rho_s}$ and
ρ = ground resistivity in Ωm
ρ_s = crushed rock (gravel) resistivity in Ωm

Ground resistance

(i) For grid depths up to 250 mm

$$R_g = \frac{\rho}{4} \cdot \sqrt{\frac{\pi}{A}} + \frac{\rho}{L} \tag{22.12}$$

R_g = station ground resistance in Ω
ρ = average resistivity of soil in Ωm

$\dfrac{\rho}{4}\sqrt{\dfrac{\pi}{A}}$ = ground resistance at the surface of the ground

$\dfrac{\rho}{L}$ = ground resistance of the total buried length (L) of conductors

Total length of the buried conductors

$$L = n_a \cdot b + n_b \cdot a + n_g \cdot h \text{ metres} \tag{22.13}$$

n_a = no. of conductors lengthwise
b = width of the grid in m
n_b = no. of conductors widthwise
a = length of the grid in m and
n_g = no. of grounding rods
h = depth of grounding rods in m

(ii) For grid depths > 250 mm

$$R_g = \rho \left(\frac{1}{L} + \frac{1}{\sqrt{20A}} \left(1 + \frac{1}{1 + h\sqrt{20/A}} \right) \right) \tag{22.14}$$

where $A = a \cdot b$

Measuring average resistivity of soil

$$\rho \simeq 2\pi a\, R_g \tag{22.15}$$

Minimum size of grid conductors

$$A = \frac{I_g''}{\sqrt{\dfrac{\mathrm{T}_{cap} \cdot 10^{-4}}{t \cdot \propto_{20} \cdot \rho_{20}} \cdot \log_e \dfrac{K_0 + t_{max.}}{K_0 + t_{amb}}}} \tag{22.16}$$

A = cross-sectional area of ground conductor in mm^2
I_g'' = ground fault current in kA (r.m.s.)
= it may be substituted with I_G (equation (22.9))
T_{cap} = thermal capacity factor in J/cm^3/°C
t = duration of fault in seconds
$\propto_{20}$ = thermal coefficient of resistivity at a reference temperature of 20°C
ρ_{20} = resistivity of ground conductor at a reference temperature of 20°C in μ Ω/cm
K_0(at 0°C) = reciprocal of $\propto_0$
$t_{max.}$ = maximum allowable temperature in °C
$t_{amb.}$ = ambient temperature in °C

Actual maximum touch and step voltages of a grounding station

$$\text{Max. step voltage, } E_s(\text{actual}) = \frac{\rho \cdot K_s \cdot K_i \cdot I_G}{L} \tag{22.17}$$

and mesh or maximum touch voltage,

$$E_m\,(\text{actual}) = \frac{\rho \cdot K_m \cdot K_i \cdot I_G}{L} \tag{22.18}$$

For details refer to the text

Estimating the value of ground conductor length to design the grounding grid

$$L > \frac{\rho \cdot K_m \cdot K_i \cdot I_G \cdot \sqrt{t}}{(1.5\, C_s \cdot \rho_s + 1000) \times 0.157} \tag{22.19}$$

Further reading

Central Board of Irrigation and Power, India, 'Corrosion of earthing equipment', Review No. 1, Jan (1973).

Central Board of Irrigation and Power, India, 'Earthing system parameters for HV, EHV and UHV sub-stations', *Technical Report No. 49*, Sept. (1985).

Central Board of Irrigation and Power, India, 'Design of earthing mat for high voltage sub-station', Publication No. 223 Jan (1992).

Central Board of Irrigation and Power, India, *Workshop on Design and Earthing Systems*, April (1994).

Reeves, E.A., *Handbook of Electrical Installation Practices.*

PART IV

Power Capacitors

23

Power Capacitors: Behaviour, Switching Phenomena and Improvement of Power Factor

Contents

23.1 Introduction

In view of the considerable increase in power distribution networks and their overutilization to meet increasing consumer and industrial demands it has become imperative to optimize the use of available power through efficient transmission and distribution.

Voltage and power factor (p.f.) are the two most important parameters in a power system that influence its utilization. The element of voltage is optimized by raising the transmission and distribution voltages as much as feasible. The more prevalent of these are 400 kV a.c. for long-distance transmissions and 33–132 kV or even higher for secondary transmissions. Figure 23.1 illustrates a typical transmission and distribution network. Continued efforts are being made to raise the transmission voltage to 750 kV a.c. or 500 kV d.c., or higher. Some countries such as the USA, Russia and Canada have already adopted such systems. A d.c. system, we recall, has no skin effect (Section 28.7) and can transmit power at unity p.f. At higher p.f.s, the line losses (I^2R) are low for the same power transmitted. It is estimated that a d.c. transmission system can transmit about threefold more power for the same cost as an a.c. transmission system.

The element of p.f. mainly affects the secondary distribution system which serves industries, agriculture, public utilities and domestic loads. Most of them are highly inductive and result in lowering the system p.f. These loads are largely responsible for most of the distribution losses and voltage fluctuations at the consumer end. In developing countries it is estimated that useful power is lost mainly due to transmission and distribution losses. In India, for instance, it is estimated to result in a loss of about 18–20% of the total useful power, most of which occurs at the secondary distribution attributable to low p.f.s.

The application of power capacitors, can tackle problems of both low p.f. and voltage fluctuations and these aspects are discussed here.

23.2 Application of power capacitors

A capacitor draws leading current. When connected to an inductive circuit, it offsets its inductive (reactive) component and improves the p.f. of the circuit. It can be applied in two ways and is accordingly classified as follows:

1 Shunt capacitor – connected across the inductive circuit to improve its p.f.
2 Series capacitor – connected in series at the far end of a long transmission or HT* distribution line to offset the reactive component of the line impedance, contain the voltage drop and enhance the receiving-end voltage. It can support a transmission or distribution system in the following ways:
   - Improving the regulation of the system at the receiving end
   - Limiting the system voltage swing during a load rejection or off-peak periods, and protect it from overvoltages
   - Enhancing the stability of the system by minimizing the voltage fluctuations caused by load variations and
   - Enhancing the power-carrying capacity of the system by reducing the I^2R losses.

This subject is dealt with in more detail in Chapter 24.

23.3 Effect of low PF

A low p.f. means a higher load current than necessary and accompanying higher line losses. Inductive loads are the main cause of a low p.f., with induction motors the major contributors. Under operating conditions a motor may often be operating underloaded due to one or more of the following reasons:

- While making selection of even for a standard motor, it is generally not possible to exactly match the rating of the machine with the load. The motor may have some reserve capacity.
- Users may select a slightly larger machine to ensure safety.
- When selecting a machine for more critical installations,

---

*Here HT means all voltages of 2.4 kV and above.

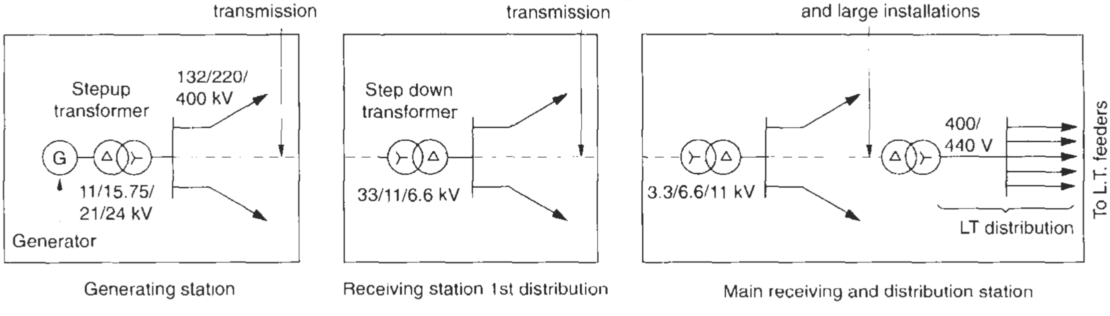

Figure 23.1 A typical transmission and distribution network

as discussed in Section 7.22 the number of deratings for all unfavourable operating conditions are assumed to be occurring at the same time. This results in the selection of an oversized machine as all the unfavourable conditions may not be occurring simultaneously.

- Wide voltage fluctuations may be prevalent in a rural distribution system, particularly in developing countries. In such cases it is common practice for users to select an oversized machine for their needs. Accordingly, the motors employed for loads such as pumps, thrashers and winnowers are normally over-rated and under-utilized. Also the same motor may have to cater for different types of loads, at different times, and these loads may be much less than the motor rating.

The power factor of a motor decreases sharply at loads lower than rated as discussed in Section 1.8. All the above factors, contribute to reducing the overall system power factor, which is sometimes seen to reach a low of 0.6 or even less on an LT distribution network.

Higher line losses result in higher voltage fluctuations due to the greater line drop (IZ). In an HT system, the voltage at the receiving end is not as much affected as in an LT system due to the lower voltage drop on an HT system as a percentage of the system voltage. An LT system experiences a much higher fluctuation, as a percentage of the supply voltage, due to excessive voltage drops. A higher current for a smaller load, due to a low power factor, reduces the capacity of the distribution network. In other words, it decreases the generating capacity of the power plant, feeding such a system. For instance, for the same power generated or distributed 'P'

$$P = \sqrt{3} \cdot V \cdot I \cdot \cos \phi$$

Therefore, for a given load current I,

$$P \propto \cos \phi$$

Thus, at 0.70 p.f., the generating or the distributing capacity of the system, compared to a system having a p.f. of 0.90, will reduce to approximately 77.8%, (0.7/0.9 × 100%). In other words, if we consider a distribution p.f. 0.70 to be improved to 0.9, then the useful power can be enhanced by

$$\frac{0.90 - 0.70}{0.70} \times 100\%$$

i.e. 28.6% of the existing system (see Figure 23.2). For the same generation or distribution current I, at a p.f. $\cos \phi_1$, utilization of the system will be

$$P_1 \propto I \times \cos \phi_1$$

whereas at an improved p.f. $\cos \phi_2$, it will be

$$P_2 \propto I \times \cos \phi_2$$

Thus while the I^2R loss will remain the same in both cases, at a lower power factor the utilization capacity of the system will reduce in the same proportion as the power factors, i.e.

$$\frac{\cos \phi_1}{\cos \phi_2}$$

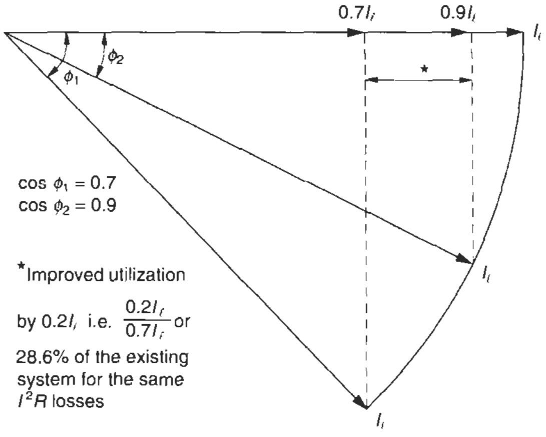

Figure 23.2 Better utilization of power with improved power factor

As a result of higher voltage drops, the receiving-end voltage may sometimes fall below the required limit which in, electric motors, is –6% (Section 1.6.2). Motors for such locations may be required to be suitable for voltages lower than the standard system voltages such as 400 V, 380 V or even less, as against the standard 415 V. A motor designed especially for a lower voltage than standard may sometimes require a larger frame size at a higher cost.

23.4 Other benefits of an improved power factor

- Reduced kVA demand will result in lower tariffs since the electricity companies usually charge users on the basis of their maximum kVA demand.
- In certain countries the consumer may even be entitled to a rebate for maintaining a high power factor, instead of paying a higher tariff.
- Lower kVA demand will reduce the load current (due to reduced I^2R losses) and result in an economical selection of switchgear components and cables.
- Lower voltage drops in the lines and cables and thus lesser voltage fluctuations.
- The electricity companies would also benefit due to better utilization of their distribution system and make more power available to consumers.

23.5 Behaviour of a power capacitor in operation

Before we discuss the application of this device, it is important that we study its behaviour during operation. A capacitor unit behaves like a short-circuit on being energized and retains its charge for a brief period even when the source of supply is removed. This behaviour gives rise to the following:

- Switching overvoltages
- Harmonic effects and inductive interferences and
- Excessive charging currents.

These aspects are discussed briefly below.

23.5.1 Switching overvoltages (surges)

This phenomenon is generally associated with an HT system. We have discussed in Section 17.7 the subject of switching surges as related to an inductive circuit. Switching phenomenon in a capacitive circuit is equally important, and a little more complex. It therefore requires more careful handling of this device. Although the switching behaviour of a capacitor circuit is almost a replica of an inductive switching, its current leading the applied voltage by 90° results in more complex behaviour than an inductive circuit during a switching operation.

The phasor displacement between the voltage and the current in an inductive circuit, particularly an induction motor or a transformer, is much less than 90° during normal operation. At a p.f. of 0.65, for instance, the current will lag the voltage by 49° and at a p.f. of 0.9 by 25°. During the most severe conditions, such as on a fault, at near a p.f. of 0.1, the current will lag the voltage by 84° and at a p.f. of 0.3 by 72°. In capacitor switching, in addition to 90° phasor displacement between the applied voltage and the current, under all conditions of switching there will also appear an overvoltage across the parting contacts, depending upon the grounding method of the capacitor units, their configuration and the applied voltage. All such overvoltages must be limited within the impulse withstand level of the capacitors, as noted in Section 26.3.2. We have analysed these aspects for the following capacitor configurations:

- Grounded star (a widely adopted practice in LT systems)
- Ungrounded star
- Delta connections and
- Parallel switching of capacitor units.

(i) Grounded star capacitor units

See the arrangement shown in Figure 23.3(a) and its equivalent single-phase circuit in Figure 23.4. We are discussing the phenomenon of switching overvoltages associated with an HT system. An LT system, although not immune to over-voltages, causes no restriking between the parting contacts of the interrupting device as a result of inadequate transient recovery voltage (TRV; Section 17.6.2) and generates no switching surges.

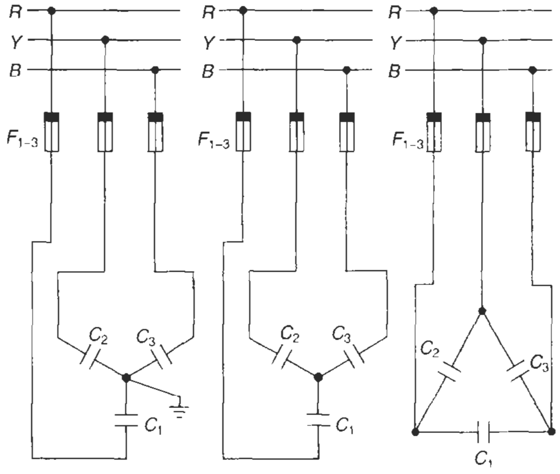

(a) Grounded star (b) Ungrounded star (c) Delta connection

Figure 23.3 Configurations and grounding methods of capacitor banks

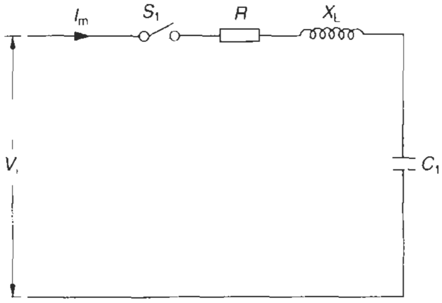

R and X_L are voltage damping impedances

Figure 23.4 A single capacitor switching

Consider the opening of a switch on one pole (Section 19.7) at the instant of contact interruption, say at point *a′* on the current wave (Figure 23.5). The current will lead the voltage by 90° and the parting contacts will be subjected to a full system voltage of 1 p.u. Refer to point '*a*' on the voltage wave. In addition, the contacts will also be subjected to the trapped charge of 1 p.u. within the capacitor unit, which it will retain for a while. If the contacts fail to interrupt at point *a′*, the arc will strike again (re-ignition of the arc plasma, Section 19.4). By the next current zero (point *b′* on the current wave), when the arc ceases again and the contacts try to interrupt, they will be subjected to a TRV of 3 p.u., the capacitor unit still retaining the charge. Refer to point *bb″* on the voltage wave. It is possible that the contacts are not able to travel sufficiently apart to build up the required dielectric strength, and the arc may strike again. At the next current zero (point *c′* on the current wave), when the contacts have travelled by another one half of a cycle, they will be subjected to four times the system voltage *cc″* on the voltage wave, considering that the capacitor unit may still be retaining its charge. The arc may now be extinguished as a result of self-attenuation, as the contacts will have travelled sufficiently far apart to withstand the TRV and interrupt the circuit. The process may be repeated if the dielectric strength or the travel of the contacts is not sufficient to withstand a TRV of four times the rated voltage. It will continue to do so until the process attenuates on its own due to circuit parameters *L* and *C*, the decreasing capacitor charge and adequate travel of the moving contact of the interrupting device and extinguish the arc to finally interrupt the circuit. Field experiments have revealed that overvoltages due to such repeated restrikes during

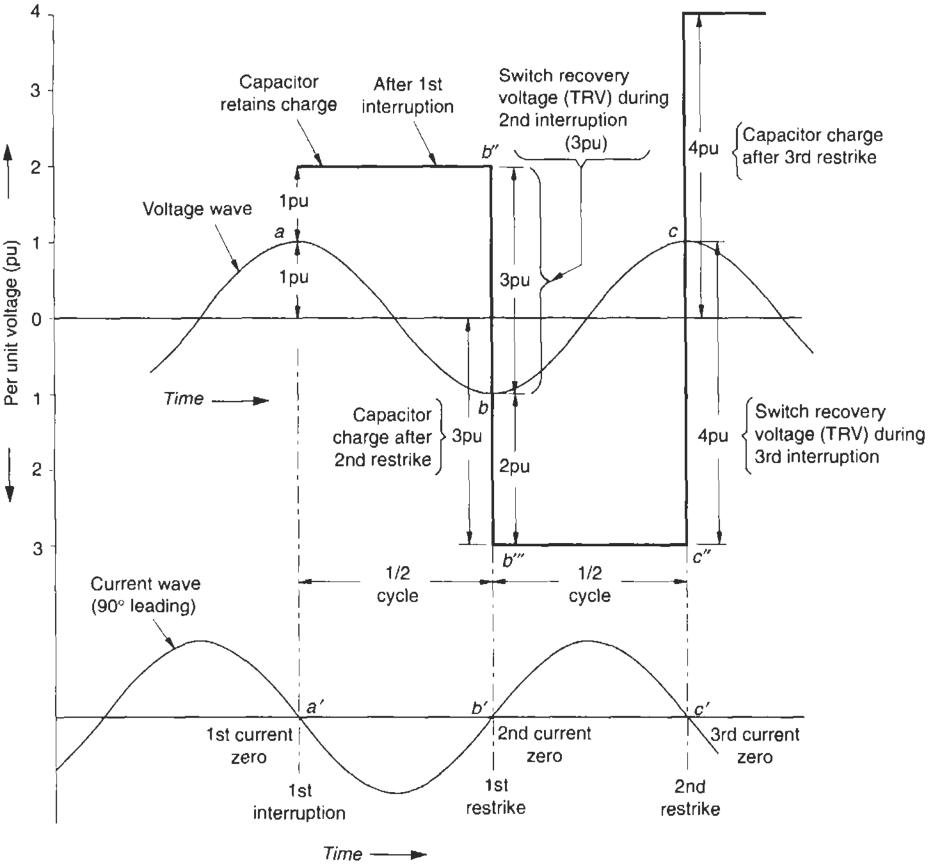

Figure 23.5 Build-up of capacitive voltage (TRV) on restrike during contact interruption in a grounded star HT capacitor unit

the interruption of a grounded capacitor unit seldom exceed 2.6 p.u. as a result of self-attenuation and high-speed modern interrupters.

(ii) Ungrounded capacitor units (both star- and delta-connected units)

Consider the arrangements shown in Figures 23.3(b) and (c). Now the opening of the switch in one phase will not isolate the capacitor in that phase from the system, as in the grounded system as a result of a feedback through the lumped (leakage) capacitances of the other two phases (Section 20.1 and Figure 20.2). Assume the initiation of interruption in one of the phases at a current zero. Refer to point *a'* on the current wave (Figure 23.6(a)). The parting contacts will now be subjected to an additional voltage equal to the system voltage of 1 p.u., because of the other two phases, which would also be conducting, besides 2 p.u. at point '*a*' as discussed in the previous case. The other two phases which are now conducting will each retain a charge of 0.5 p.u. at every voltage peak in the first phase, as illustrated in Figure 23.6(b). This charge will be redistributed in the first phase as soon as its contacts open. The unswitched phases, however, will retain a charge of

0.5 p.u. + 0.866 p.u. or 1.366 p.u. (max.)

where 0.5 p.u. = trapped charge and

$0.866 \text{ p.u.} = \frac{\sqrt{3}}{2}$ p.u. is the excitation due to lumped capacitances of the unswitched phases.

The parting contacts will therefore now be subjected to a TRV of 3 p.u. at the first interruption. If the contacts fail to interrupt at point *a'*, the arc will strike again, and by the next current zero (point *b'* on the current wave), when they will try to interrupt again, will be subjected to a TRV of 4 p.u. Refer to point *bb''* on the voltage wave, assuming that the capacitor unit is still retaining its charge. The cycle of an arc restrike will be repeated at the next current zero *c'*, at 5 p.u., point *cc''* on the voltage wave. The process will continue until the circuit will finally interrupt by virtue of the interrupter's ability to interrupt or attenuation of the TRV, whichever occurs first. Field experiments have revealed that overvoltages due to repeated restrikes during the interruption of an ungrounded capacitor unit, connected in star or delta, will seldom exceed 3 p.u. due to self-attenuation and high-speed modern interrupters. The system grounding has no effect on such ungrounded capacitor units. The interruption of ungrounded capacitor units is thus more severe than of grounded units.

(iii) Parallel switching of capacitor units

The amplitudes of overvoltages (TRVs) caused by a single capacitor switching, as discussed above, will diminish into when the capacitor interrupts a circuit that already has energized capacitor units of comparable sizes in the same system. At the instant of contact separation, the two units, which may be charged at different potentials, will get discharged into each other and their cumulative voltage will tend to settle at an intermediate value that will depend upon the size of the capacitors being switched. The larger the line banks (already charged capacitors), the lower will be the amplitude of the TRV of the combined units.

Summary of overvoltages (on HT capacitor switchings)

1 Switching overvoltages is generally a phenomenon of HT circuits.
2 The choice of the type of capacitor connections will largely depend upon the system, its fault level and the presence of a communication system in the vicinity (as a result of harmonic effects and inductive interferences). Different electricity companies may adopt to different practices of capacitor connections and their switchings, depending upon these factors. A more detailed study on this subject (harmonics and inductive interferences) is beyond the scope of this handbook, but these effects are discussed briefly in Section 23.5.2. Various papers written on the subject and a study of existing systems and the normal practices to deal with these effects and interferences are available and may be referred to for more details. See the further reading at the end of this chapter. Overvoltages, as developed on different grounding systems, are discussed in more detail in Section 20.2.
3 When interrupting a capacitive circuit while the

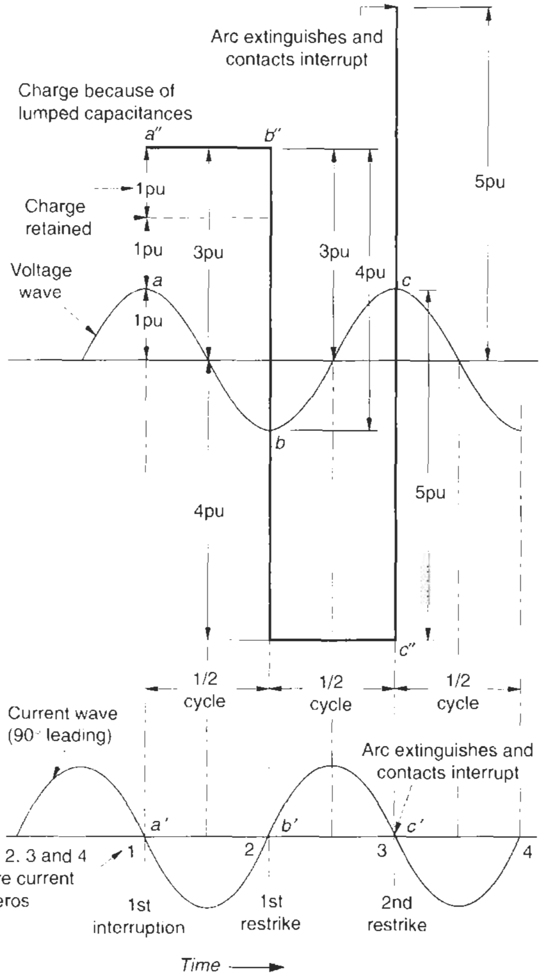

Figure 23.6(a) Build up of capacitive voltage (TRV) on restrike during a contact interruption in an ungrounded star HT capacitor unit

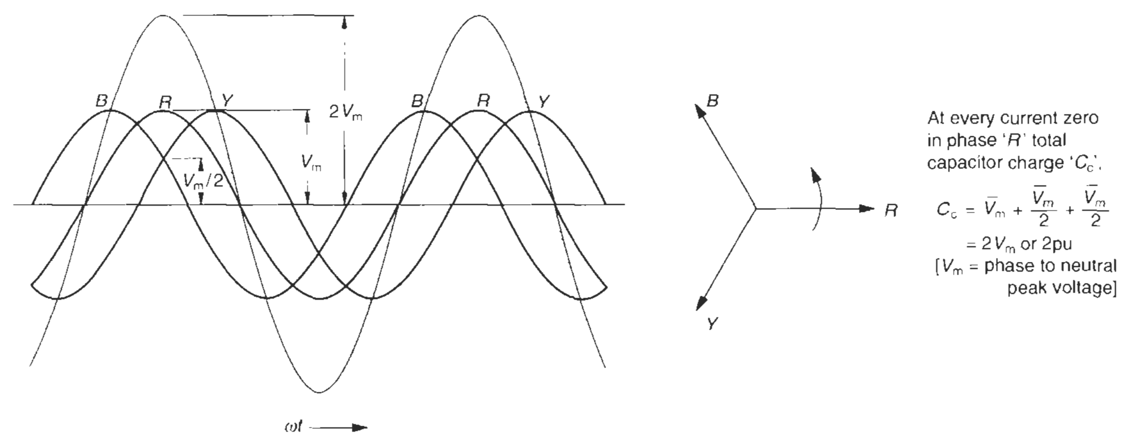

Figure 23.6(b) Capacitor charge in an ungrounded system

capacitor is fully charged, the system will experience an overvoltage and the arc between the moving contacts of an interrupting device (a breaker or a contactor) may restrike even more severely than an inductive circuit, due to higher restriking voltages (TRVs).

4 Some resistance and/or inductance is recommended to be introduced into the switching circuit to dampen the restriking voltage by altering the p.f. of the switching circuit during a make or a break, by helping the voltage and the current phasors to move closer so that on a current zero, the TRV is much less than V_m. See also Figures 17.11(a) and (b) for an inductive circuit. The situation will be almost the same for a capacitive switching except that the current will now be leading the voltage by 90° instead of lagging at much less than 90°.

5 The impedance of the capacitor switching circuit will determine the attenuation of the striking voltage and the time of arc extinction.

6 Frequent switching operations must be avoided as far as possible. In an HT system, they are as such low. However, where automatic switching devices have been installed, frequent switching operations may be likely. As standard practice, therefore, precautions should be taken to allow a pause before the next switching, or introducing a rapid discharge device across each capacitor unit to allow the last dis-connected unit discharge to a safer value before reswitching (Section 25.7). Nevertheless, switching surges must be dampened as much as possible by introducing some resistance or inductance into the switching circuit, as noted above.

7 The following are the recommended values of the switching transient voltages that may be considered to select the switching device:
   (a) Grounded capacitors units – peak recovery voltage (TRV) on a healthy switching up to 2.6 p.u.
   (b) Ungrounded star- and delta-connected capacitor units – peak recovery voltage (TRV) up to 3 p.u.

8 Where necessary, surge arresters may be used to dampen the high transient switching voltages. Refer to Section 17.11.

9 A capacitor will retain its charge, even after disconnection, as it takes time to decay. If it is connected across a motor it is possible that the capacitor-magnetizing kVAr may excite the motor during an idle period, and make it act like an induction generator and result in an overvoltage (Section 23.13). This overvoltage may pose yet another switching problem in the inductive circuit, as discussed in Section 17.7. The capacitor manufacturers, as standard practice, provide a discharge resistance across each capacitor unit to discharge the trapped charge as soon as the capacitor is disconnected. For rate of discharge see Section 26.3.1(15).

10 As an energized capacitor retains its charge, even after a disconnection and causes a voltage transient on a reswitching, it is recommended that its circuit be closed only through a contactor or a breaker, with an undervoltage release. So that in the event of a power failure, the circuit will interrupt automatically and can be reclosed either manually or through a power factor correction relay to allow a pause before reclosing.

23.5.2 Harmonic effects and inductive interferences

Distortions in voltage and current waveforms, from their sinusoidal waveforms, are termed harmonic disorders. They are caused by equipment whose impedance varies with the voltage or current change (non-linear loads). This includes induction motors, fluorescent lamps, battery chargers, silicon-controlled rectifiers (SCRs) and welding equipment as well as any magnetic core that saturates at varying degrees of applied voltage. A sinusoidal (a.c.) voltage that rises and falls with each one half of a cycle causes such an effect. Such loads are saturable reactors and power transformers (Section 1.2.1). The amplitudes of such distortions (harmonics) magnify with resonance effects between the system and the load impedances. The amplitude of the thus distorted sinusoidal waveform of the voltage or the current quantities is the phasor sum of all the individual sinusoidal waveforms of each harmonic present in the system, as if all the harmonics are superimposed on each other (Figure 23.7). A harmonic is the integral multiple of the fundamental frequency, such as the third, fifth, seventh and eleventh having a frequency of 3*f*, 5*f*, 7*f*, and 11*f* respectively (*f* being the fundamental frequency of the system).

Generally, a few harmonic quantities are always present in an a.c. system, as normally some non-linear loads always constitute a power system. These harmonics may not affect the operation of the inductive loads connected on the system as much as a capacitive load or a communication network that may be running in parallel or in the vicinity of such a power system.

Capacitors themselves do not generate harmonics but they do magnify their amplitudes, when connected in

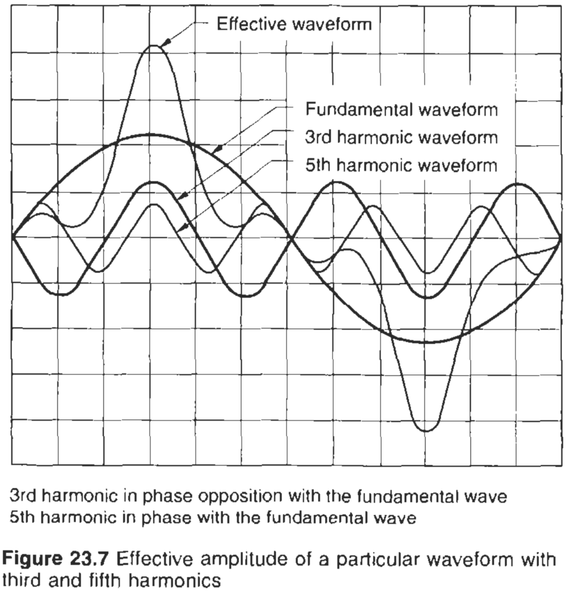

3rd harmonic in phase opposition with the fundamental wave
5th harmonic in phase with the fundamental wave

Figure 23.7 Effective amplitude of a particular waveform with third and fifth harmonics the system. If the capacitors are grounded star, they will provide a return path for the third harmonic quantity through their grounded neutral and help the system to generate third harmonic disorders. As the harmonic components affect a capacitive circuit more than any other equipment connected in the system, our main emphasis will be a study of the harmonic effect on a capacitive circuit.

But as the harmonics do exist in the system, they do affect an inductive load. They may also disturb a communications network as a result of capacitive coupling, whose effects are magnified in the presence of capacitor units in the power system. It is therefore considered relevant to discuss this subject in more detail to make the harmonic study more informative.

Here we briefly discuss the sources of generation of harmonics of different orders, their likely magnitudes and possible influence on the capacitor and inductive loads, connected in the system. We also study their influence on a communications network. Such a network is affected when it is running in parallel, and in close vicinity of long-distance HT distribution power lines. Sometimes the communication lines may be running through the same structures on which the power lines are running.

A Effects of harmonics on the performance of a capacitor unit

By the harmonic voltages

The effective harmonic voltage can be expressed by

$$V_h = \sqrt{(V_1^2 + V_{h3}^2 + V_{h5}^2 + V_{h7}^2 + \ldots V_{hn}^2)} \qquad (23.1)$$

where V_h = effective harmonic voltage

V_1 = system voltage and

V_{h3}, V_{h5}, V_{h7} and V_{hn} etc. = magnitudes of the harmonic voltage components in terms of fundamental voltage at different harmonic orders.

Referring to the data available from experiments, as shown in Table 23.1, it has been estimated that a V_h of $1.1 V_1$ should be sufficient to account for the harmonic effects. For this dielectric strength is designed a capacitor unit and selected a switching or protective device.

By the harmonic currents

A harmonic component affects the performance of a capacitor unit significantly due to diminishing reactance at higher frequencies, which adds to its loading substantially and can be analysed as follows:

$$Xc = \frac{1}{2\pi fc} \text{ or } \propto = \frac{1}{f}$$

If n is the harmonic order, such as 3, 5, 7 and 9 etc., then the harmonic frequency

$$f_{hn} = n \cdot f$$

and harmonic reactance

$$X_{ch} \propto \frac{l}{n \cdot f}$$

This means that the capacitor will offer a low reactance to the higher harmonics and will tend to magnify the harmonic effect due to higher harmonic currents on account of this. In fact, harmonic currents have a greater heating effect too compared to the fundamental component due to the skin effect (Section 28.7).

$$\because I_{ch} = \frac{V}{X_{ch}} \qquad \therefore I_{ch} \propto n \cdot f$$

where I_{ch} and X_{ch} have been considered as the capacitive current and the reactance of the capacitor respectively, at a particular harmonic frequency, $f_h = n \cdot f$. The effective current caused by all the harmonics present in the system can be expressed by

$$I_{ch} = \sqrt{(I_c^2 + 9\,I_{ch3}^2 + 25\,I_{ch5}^2 + 49\,I_{ch7}^2 + \ldots n^2\,I_{chn}^2)} \qquad (23.2)$$

where I_c = rated current of the capacitor, and

I_{ch3}, I_{ch5}, I_{ch7} and I_{chn} etc = magnitude of the harmonic current components at different harmonic orders.

Based on the system studies carried out and Table 23.1, it has been assessed that in actual operation, effective current through a capacitor circuit may increase up to 1.3 times its rated current, I_c, i.e. $I_{ch} \simeq 1.3\,I_c$ to account for all the harmonic effects ($V_h^2 \cdot f_h$; equation (23.4)). A capacitor unit is thus designed for at least 30% continuous overload capacity (Section 25.6). Its switching and protective devices are selected along similar lines.

Summarizing the above, the harmonic quantities when present in a system on which are connected a few capacitor banks affect the capacitors as follows:

- Overcurrent will mean higher losses ($I_{ch}^2 \cdot R$).
- Overcurrent will also mean an overvoltage across the capacitor units, which would inflict greater dielectric stresses on the capacitor elements.
- Since the harmonic disorders occur at higher frequencies than the fundamental ($f_h > f$), they cause higher dielectric losses due to a higher skin effect.

Harmonic output of a capacitor unit

The rating of a shunt capacitor unit

$$\text{kVAr} = \frac{\sqrt{3} \cdot V \cdot I_c}{1000} \quad (V \text{ in volts and } I_c \text{ in amperes})$$

$$\text{and} \quad I_c = \frac{V}{X_c}$$

$$\therefore \text{kVAr} = \frac{\sqrt{3} \cdot V^2}{1000 \cdot X_c} \qquad (23.3)$$

$$\text{or kVAr} = \frac{\sqrt{3} \cdot V^2 \cdot 2\pi \text{f.c.}}{1000} \qquad (23.4)$$

Generalizing, $\text{kVAr}_h \propto V_h^2 \cdot f_h$

or

$$\text{kVAr}_h \propto \sqrt{V_1^2 + 3 \cdot V_{h3}^2 + 5 \cdot V_{h5} + 7 \cdot V_{h7}^2 + \ldots n \cdot V_{hn}^2)} \qquad (23.5)$$

The rating of a capacitor unit will thus vary in a square proportion of the effective harmonic voltage and in a direct proportion to the harmonic frequency. This rise in kVAr, however, will not contribute to improvement of the system p.f. but only of the overloading of the capacitors themselves.

Note

1 When determining the actual load current of a capacitor unit in operation, a factor of 1.15 is additionally considered to account for the allowable tolerance in the capacitance value of the capacitor unit (Section 26.3.1(1)):

$$\therefore \text{ Effective kVAr}_h = 1.3 \times 1.15$$

$$\approx 1.5 \text{ times the rated kVAr}$$

and for which all switching and protective devices must be selected. It may, however, sometimes be desirable to further enhance the overloading capacity of the capacitor and so also the rating of the current-carrying components if the circuit conditions and type of loads connected on the system are prone to generate excessive harmonics. Examples are when they are connected on a system on which we operating static drives and arc furnaces.

2 It is desirable to contain the harmonic effects as far as practicable to protect the capacitors as well as inductive loads connected on the system and the communication network, if running in the vicinity.

B Influence of harmonics on the performance of an inductive load

In an inductive circuit the presence of harmonics is not felt so much as the higher harmonics tend to enhance the harmonic reactance, which causes a dampening effect:

$$X_L = 2\pi \cdot f \cdot L$$

For a harmonic order n and harmonic frequency $n \cdot f$, the harmonic reactance will become

$$X_{Lh} = 2\pi \cdot n \cdot f \cdot L \text{ i.e. } \propto n \cdot f$$

- At higher harmonic frequencies, X_{Lh} will rise proportionately and reduce the harmonic currents and provide a dampening effect. The harmonic quantities present in the system thus do not have any significant effect on the performance of an inductive load, which can be a generator, transformer, motor, cables and overhead lines etc. In an LT system, such effects are highly dampened due to high system impedance. No special efforts are therefore generally made to suppress the harmonic effects in an LT system.
- The magnetic core of an electromagnetic equipment (generator, transformer, reactor and motor etc.) will, however, generate additional no-load iron losses at higher harmonic frequencies (equations (1.12) and (1.13)). The content of iron losses, being low, will rise only marginally and can be ignored for all general applications.
- Electronic appliances that are highly susceptible to such effects are, however, provided as standard practice with harmonic filters in their incoming circuits.

C Effects of harmonics on telephone lines

In earlier years, to reach a remote area, where separate telephone lines had not been laid it was normal practice to run them through the same poles as the HT power distribution lines (generally 11–33 kV). This was particularly true of internal communications of the electricity companies for ease of operation and to save costs and time. This communication was known as the magneto-telephone system. But the proximity of telephone lines to power lines adversely affected the performance of the telephone lines due to generation of overvoltages (Chapter 20) and electrical interferences (conductive and inductive interferences, discussed later) on the telephone lines by the power lines. Some of these interferences, particularly system harmonics, had the same frequency as the audio frequency of the telephone lines and affected their audio quality.

The running of telephone lines through power lines is long discontinued. They are now run on separate structures within a city and nearby areas at audio frequency (≃ 0.3–3.4 kHz), and maintain enough distance from HT power distribution lines. They are therefore almost unaffected from such disturbances. Nevertheless, interferences must be kept in mind when installing these lines so that they are out of the inductive interference zone of the power lines. The latest method in the field of communications to avoid disturbances is to use underground optical fibre cables, where possible, as discussed later. Optical fibre cables are totally immune to such disturbances.

Remedies for electrical interferences

The following measures are recommended to mitigate these problems:

1 Use of screened cables in the communication network and grounding the screen effectively. Metallic-sheath or armoured cables are not recommended.
2 Transposing the overhead communication lines, i.e. reversing the respective positions of the two sides of the lines every 1 km or so, to avoid continuous parallelism (due to electrostatic and electromagnetic inductions), as illustrated in Figure 23.8. See also Section 28.8.4(3) on phase transposition.
3 It is common practice to leave the star-connected capacitor banks ungrounded when used in the system or use delta-connected banks to prevent the flow of third harmonic currents into the power system through the grounded neutral.

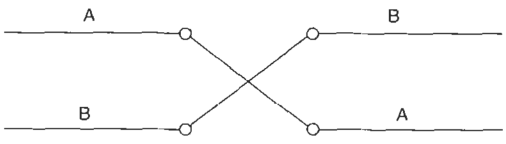

Figure 23.8 Transposition of overhead communication lines

4 Use of filter circuits in the power lines at suitable locations, to drain the excessive harmonic quantities of the system into the filter circuits.

Filter circuits

A filter circuit is a combination of capacitor and series reactance, tuned to a particular harmonic frequency (series resonance), to offer it the least impedance at that frequency and hence, filter it out. Say, for the fifth harmonic, $X_{C5} = X_{L5}$.

$$\text{Since } f_{h5} = 5 \cdot f$$

$$\therefore \quad \frac{1}{2\pi \cdot 5f \cdot C} = 2\pi \cdot 5 \text{ f} \cdot \text{L}$$

$$\text{or} \quad \frac{X_c}{5} = 5X_L$$

$$\text{or} \quad X_c = 5^2 \cdot X_L$$

Generalizing, $X_c = N_h^2 \cdot X_L$ for the N_hth ordinal number of the harmonic disorder.

A capacitor is susceptible to variations in the system voltage, frequency and operating temperature. Failure of capacitor elements may also cause a variation in capacitive values in the three phases of the filter circuit. Under these conditions, it is possible that a filter circuit may fall out of tune during normal service and cause excessive currents in one or more phases due to sub-synchronous or ferro-resonance effects with the impedance of the main system. If we consider the reactance of the detuned circuit as X_c (considering it to be capacitive after detuning, as X_c will rise when C of the capacitor units decreases), which may fall in phase opposition to the system reactance X_L (considering it to be inductive), as shown in Figure 23.15(b) then it will lead to such a situation and cause excessive harmonic currents through the filter circuit, due to its low effective impedance, Z, since

$$Z = R_o + X_L - X_C (R_o \text{ is the resistance of the main system})$$

$$= \text{very low}$$

It is therefore recommended that a small resistance of a low $I^2 \cdot R$ loss be introduced into the filter circuits as shown in Figure 23.15(a) to limit such an excessive flow of currents through them. Knowledge of the system parameters (resistance and reactance) is also essential to design an appropriate filter circuit to avoid a possible resonance in the first instance. If this occurs the resistance thus introduced will limit the excessive flow of current.

5 Another remedial measure is the use of blocking circuits by providing a high-impedance path in the ground circuit when a phase-to-ground circuit is used for the com-munication network, to block the entry of the third harmonic quantities into the system from other systems.

Blocking circuits

These are parallel resonant L-C circuits, and are tuned to offer a high impedance to a particular harmonic frequency to block its entry into the system through its neutral from another system. For other frequencies, particularly at power frequency, it will offer a very low impedance and permit them to flow into the system. The filter circuit may now be designed for a notch frequency of

$$f_h = \frac{1}{2\pi \cdot \sqrt{LC}} \qquad (23.6)$$

At this frequency, the filter circuit will offer a very high impedance and block the entry of that harmonic to flow into the circuit through its neutral. For other frequencies, it will provide a very low impedance and permit them to flow into the circuit. Thus for any value of f_h the product of LC can be determined, and hence the blocking circuit can be designed. To achieve a narrow bandwidth of attenuation, at near f_h, the blocking circuit may be designed separately for each major harmonic frequency (f_h). To ensure a high X_{ch}, it is advisable to keep the value of L low and hence limit the inflow of charging currents.

Application of such circuits is also provided in the form of a line trap, which is a blocking circuit and is used at each end of the line to which the carrier relaying is connected as discussed later. A bypass or filter circuit is also provided to drain the power frequency component of the current when present in the communication network. One end is connected to the main line through a coupling capacitor or CVT and the other to the ground through the PLCC (Power Line Carrier Communication), as illustrated in Figure 23.9(b). Leading manufacturers combine the coupling equipment and PLCC coupling device into one unit for ease of application and installation.

Use of tertiary (auxiliary) winding

When a power transformer is Y/Y or Y/Y connected and is feeding a system on which harmonics are not desirable, it is generally provided with a tertiary winding. A tertiary winding, which is also called an auxiliary winding, is an additional winding connected in Δ, and sandwiched between the main primary and the secondary windings of the transformer. It thus has the same magnetic circuit. This winding provides a closed path for the third harmonic quantities to circulate and prevents them from appearing on the load side. It may also be used for the purpose of metering, indication and protection of ground fault currents.

Other than the system harmonics, electrical interferences are also caused by line disturbances, which may be caused by lightning, switching, sparking or a fault. As discussed in Chapter 17, line disturbances occur at very high frequencies but some may coincide with the audio frequency of telephone lines, and cause disturbance in the audio quality of the telephone system. All these disturbances are referred to as inductive interferences.

We provide more details on inductive interferences in the box below, to make the subject of electrical interference more informative. We also provide a passing reference to communication systems being adopted worldwide.

Influence of HV and EHV system disturbances on communication services

Power and communication lines are not run through the same structures due to very high transmission and distribution voltages. Referring to long HV* or EHV* power lines, electrical interferences are caused whenever these lines and the communication lines run in parallel in close vicinity to each other and the distance between them falls short of the inductive zone of the power lines. To protect the communication lines from inductive interferences their distance from the power lines is maintained such as to contain the maximum radio influence voltage (RIV) of the power lines on the communication lines within 100 μV at 1000 kHz, as in NEMA-107. The main causes of electrical interferences in an overhead communication network are distortions in the voltage and current waveforms in the overhead power lines, as discussed below.

1 Electrostatic induction (a voltage effect)

This is the prime cause of noise and distortion in an audio system. The capacitive coupling (conduction) between the power and the communication lines gives rise to such an effect. It is associated more with the voltage of the system and particularly when it is capacitor compensated. Even without the power capacitors, the leakage (coupling) capacitances between the HV or EHV power lines, particularly 132 kV and above, and the overhead communication lines play an important role and give rise to this phenomenon. Systems lower than 132 kV do not cause such a situation as a result of the insignificant capacitive effect.

Normally small charging currents will flow from the main power lines to the communication lines through their coupling capacitances C_c, (Figure 23.9(a)). The charging currents find their return path through the grounded communication lines (when the communication lines have their return path through the ground), having a ground capacitance C_g. These capacitances form a sort of voltage divider and induce an electrostatic voltage into the communication lines which can be expressed by

$$V_c = \frac{C_c}{C_c + C_g} \cdot \frac{V_r}{\sqrt{3}} \tag{23.7}$$

where V_c = induced electrostatic voltage in the communication lines

C_c = coupling capacitance between the power and the communication lines and

C_g = ground circuit capacitance of the grounded communication lines.

Both C_c and C_g, are related to the system voltage, as can be inferred from Table 24.1(b). The field induced by them is termed an electric field (non-magnetic). This field, i.e. content of C_c and C_g, rises with an increase in the system voltage.

V_r = nominal voltage of the power system.

The voltage, V_c, is the main source of distortion in the audio quality of speech and the carrier waves. In normal conditions (at power frequency) the electrostatic effect may be feeble but during a line disturbance, the charging currents (V_h/X_{ch}) magnify due to higher system frequencies (high f_h) and the diminishing value of coupling impedance,

$$X_{ch} = \frac{1}{2\pi f_h C_c}$$

and cause severe distortions in the audio and carrier waves. The higher the system frequency on a disturbance, the higher will be

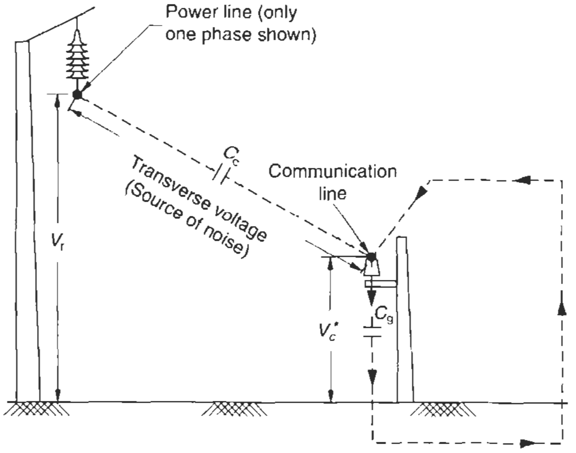

* Longitudinal voltage (Source of danger to the telephone equipment and operating personnel)

Figure 23.9(a) Electrostatic influence on a communication line

---

* We have classified the different voltage systems as follows:

HT – up to 66 kV, HV – above 66 to 245 kV, and

EHV – above 245 kV. UHV – 1150 kV (ultra high voltage used in the USA).

the distortion level, even for their (harmonics) small contents (Table 23.1). During a phase-to-ground fault, for instance, the ground potential may rise (Section 20.1) and cause much higher inductive interferences (electrostatic induction), that may jeopardize the communication systems particularly those serving essential services such as railways, defence installations, power generation and transmission. The ground conductor now acts like a large-diameter solenoid producing high induced currents in the grounded communication network and raises its ground potential. It gives rise to noise disturbances and affects its audio quality. It may also distort the carrier waves (≈30–500 kHz) such as those used in a power line carrier communication (PLCC) network, and mutilate the transfer of vital data or sends out wrong signals. To achieve better reliability, such as on a critical power network, coupling between phase to phase is used. We provide the layout of such a system in Figure 23.9(b).

2 Electromagnetic induction (a current effect)

This may occur as a result of electromagnetic induction between the power and the communication lines due to their proximity. The magnetic field produced by the main power conductors may infringe upon nearby existing communication lines. As such, it may not cause serious disturbance due to adequate spacing (>305 mm, Section 28.8) between the power and the communication lines. But in a grounded communication network the situation may deteriorate, during a single phase-to-ground fault in the power lines. The grounded conductor which will carry the ground fault current will now act as a very large-diameter solenoid and produce high magnetic fields, inducing heavy overvoltages in the communication lines significantly affecting audio quality. Where a more reliable communication network is considered imperative, this is achieved by connecting the network between phase to phase than phase to ground.

All effects caused by electrostatic or electromagnetic inductions are termed Inductive Interferences. With the use of glass optical fibre cables in new installations, this effect is overcome automatically. Optical fibre cables, as discussed later, have no metal content and carry no electrical signals. Therefore the above discussion is more appropriate for existing installations and also to provide a theoretical aspect and more clarity on the phenomena of inductive interferences. These can also be applied to other fields rather than communications alone.

In the earlier installations sensitive to such interferences the normal practice was coordination between the generating and power transmission agencies and the authorities of essential services (such as public telephones, defence services and railways), who provide their own communication systems, to relocate their telephone lines to mitigate this problem at the planning stage.

3 Poor joints

In addition to the above, sparking in the main lines due to poor joints or old and dirty insulators and corona discharges, flashovers and arcings between the making contacts of a switching device during a switching operation, also may generate high-frequency waves from 10 kHz to some MHz and distort the carrier and radio frequency waves.

Reliable communication services

A reliable telephone system for public communication, a defence installation, railways or a power generating and transmitting network is an essential requirement between any two stations, and must be free of such disturbances. The proximity of HV and EHV power lines influences their performance. Some interference may be due to lightning and switching surges or corona discharges at very high frequencies. All these may cause disturbances when their frequencies coincide with those of the carrier waves (≈30–500 kHz) and radio waves (in MHz). These disturbances may also distort the transmittal of vital data, when such services are also employed for transmitting of information such as by a power line carrier communication (PLCC) network.

We give below for a general reference brief details of a PLCC network as used for power generating and transmitting communication services. A PLCC uses coupling equipment, filter and blocking circuits, which have also been discussed separately in this chapter.

Power system communication through a PLCC

Power system communication is a complex subject. As power generation and transmission capacity grows, so does the necessity for exchange of information at high speed, between the generating stations, local dispatch centres and the load control centres. Powerhouse communication services are different from normal telephone services. They are regarded as highly essential and require far more reliability to maintain continuity. They should remain free of disturbance, particularly during fault conditions or line disturbances. Reliable communication helps in monitoring all the feeding stations and generating units that are operating in tandem on that network for their operating conditions and load balancing and then taking prompt remedial action, when required, by load balancing or load shedding as may be necessary. It also provides protection signalling to isolate the faulty section from the system and enhance the security level of the system. All this is achieved with the use of a PLCC network, which is connected at both ends of the lines as illustrated in Figure 23.9(b). It can carry out a number of important functions for a power generating and transmitting network, besides monitoring its health.

The main functions of a PLCC can be

- Voice communication (telephone services) between the generating stations, sub-stations and the load dispatching centres.
- Fax and telex services
- Telemetering:
  - (a) To transmit messages and data between two stations and to monitor and take preventive measures in the operating conditions of the entire power network, to achieve a more efficient and reliable power system.
  - (b) To transmit data records of voltage, frequency, kW, kWh and kVAr or any other relevant information on the system's operating conditions. These data are generally superimposed on the speech channels.

Note

There can be dedicated channels for data transmission and voice communication. The data channel can also be superimposed over a voice on the same channel.

- Remote supervision and automatic load-control of generating units, load dispatch centres and sub-stations to maintain the desired operating parameters, including load sharing.
- Protection signalling between two ends of the line. This accelerates operation of the protective relays either by isolating the faulty

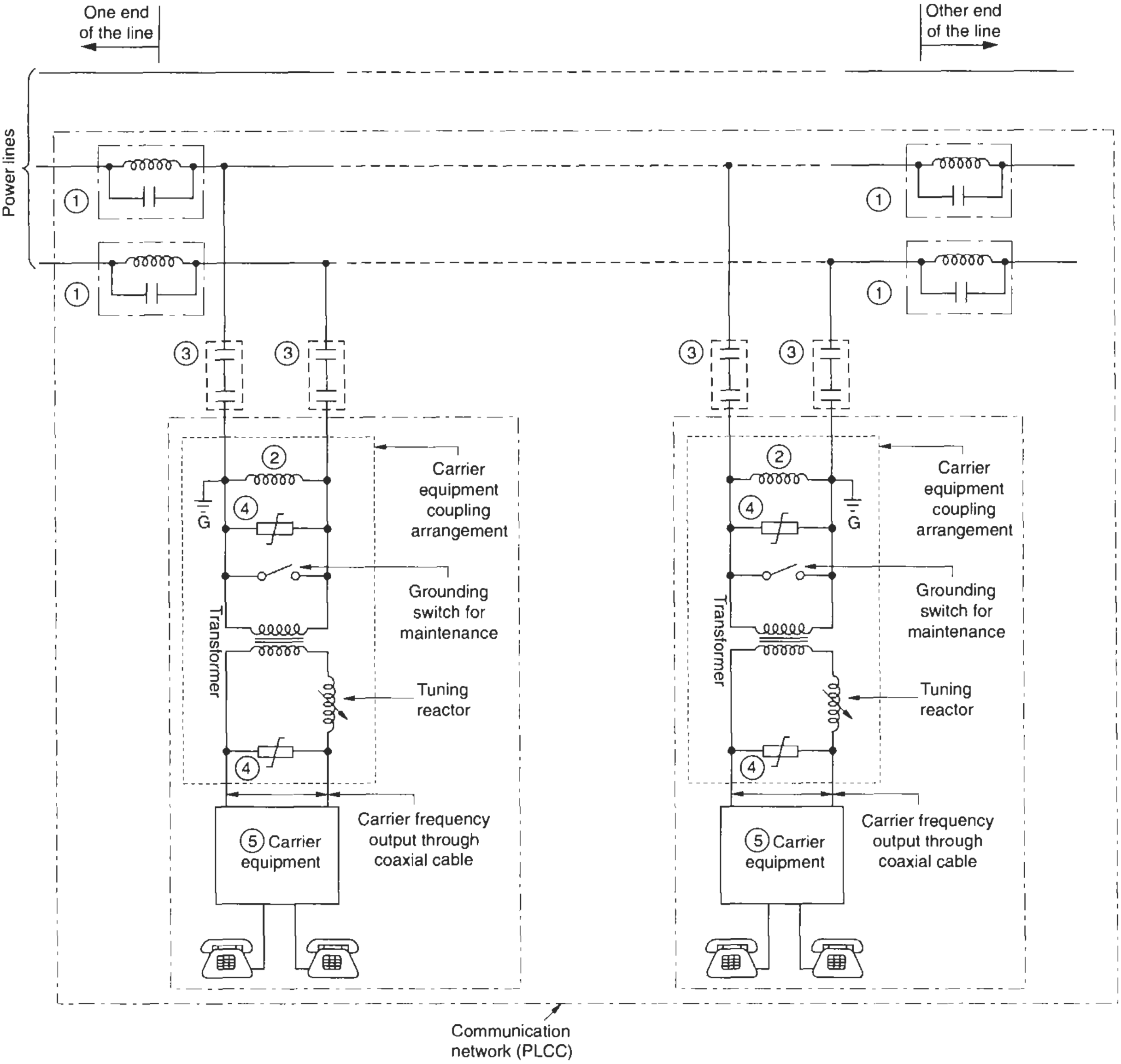

1. Line Trap:
   To block carrier frequencies to travel beyond the communication network and weaken the vital signals.
2. Drain Coil:
   It has low impedance at power frequency and high impedance at carrier frequency
   (a) To drain out power frequency component of the current when present in the communication network
   (b) It also protects the CVT from overvoltages.
3. Coupling capacitor or CVT is used when it is required for measurement and protection. For details on CVT refer to Section 15.4.1.3,
4. Surge Arrester:
   To drain out the excessive voltages transferred to the communication network through the CVT, caused by lightning, switching or a fault.
5. The carrier equipment generally comprises the following:
   (a) Carrier wave instruments and devices,
   (b) Protection signalling equipment and devices, and
   (c) Telephone, Telex, Fax and Data transmission equipment.

Figure 23.9(b) Typical layout of a line coupling device and carrier equipment (PLCC) showing phase-to-phase coupling

line from the system or by preventing tripping of a healthy line through blocking signals during a system disturbance, hence retaining continuity of supply of the healthy lines on a system disturbance as far as possible.
- Carrier relaying permits high-speed clearing of faults.
- For protection where the direction of the current or the phase angle of the two ends of the line are compared to decide whether there is a fault on a particular line.

The transmission of data to the load dispatch centres is conducted at different frequencies. The carrier frequency is decided by the user and may fall in the range 30–500 kHz. A typical communication and relaying scheme is illustrated in Figure 23.9(b). For more details on the PLCC, refer to the further reading at the end of the chapter.

A PLCC should ensure a good quality of speech and transmission of vital data at a carrier frequency for clear and unambiguous communication between two stations. It should also avoid false signalling so that

- High-frequency disturbances are not transferred to the carrier equipment through the coupling equipment.
- Disturbances do not mutilate the transfer of vital data or send erroneous signals that may lead to malfunctioning of some vital relays or prevent them from taking timely corrective action.
- The coupling of a PLCC with the main lines is carried out through line traps, and coupling capacitors or a CVT. A CVT is used when it is also required for measurement and protection. For details on a CVT refer to Section 15.4.4.

The PLCC can be connected between a phase and the ground of the transmission line itself, the ground forming the return path. Use of only one conductor saves on cost and makes the whole system economical. But this arrangement is not reliable due to dependence on a single conductor which during a problem or fault on this phase may render the whole communication system inoperative. Good practice is therefore to connect the PLCC between any two phases. A typical network is shown in Figure 23.9(b). Use of digital PLCC equipment can provide a more reliable communication system and more speech and data communication channels.

Optical fibre cables (OFCs)

The optical fibre communication system employs the latest technology in the field of communication and data transmission and replaces the use of conventional copper cables and overhead lines to underground fibre optical communication systems. The principle of this technique is that the transmission of light signals by internal reflections through transparent fibres of glass, can be carried over long distances without losing clarity or strength.

The optical fibre is an extremely pure core of glass fibre, surrounded by a cladding to contain the light beams within the core. Metallic shedding of non-magnetic material is also provided over the glass fibre to protect the cable from damage during transportation and handling.

The electrical signals (pulses) of the audio waves are converted into light pulses optical energy through transducers. This optical energy is then aimed at one end of the thin and transparent optical fibre. The thickness of the fibre is even less than a human hair, say, up to 25 μm. The core of fibre glass transforms the optical (light) energy into a single wave (1330×10^6 or 1550×10^6 km wavelength) of intense light. This wave possesses much more capacity for carrying information than copper cables. At the receiving end a decoder is used to convert the optical energy back to the original audio waves. A bunch of optical fibre cables can transmit millions of audio signals at the same time, each fibre being capable of transmitting as much information as a thick copper cable with a number of cores.

This technique has completely transformed traditional overhead communication systems. As there is no use of copper or electricity in the optical fibre the optical waves are not subject to any electrical interference as discussed above. Corning Glass Works, USA, were the first to produce such cables in 1970.

D Influence of harmonics on other electrical and electronic circuits

By the harmonic voltages

1 All electrical equipment and devices connected on the system are subject to higher dielectric stresses due to a higher effective voltage (equation (23.1)).
2 High harmonic voltages may give rise to pulsating and transient torques in a motor or a generator, in square proportion to the voltage ($T_h \propto V_h^2$). At higher amplitudes of such harmonics, it is possible that the driving or the driven shafts may even shear off as a consequence of transient torques. Transient torques, up to 20 times the rated torque, have been experienced with oversized capacitor units connected on the system, causing wide voltage fluctuations.
3 Additional noise from inductive equipment such as motors, generators and transformers and even overhead lines.
4 Flickering of GLS lamps in homes and offices.

By the harmonic currents

1 Overheating of the windings of an inductive load, such as a transformer and rotating machines, cables and overhead lines etc., connected on the system due to the higher effective current (equation (23.2)).
2 The electromagnetic relays, which have a magnetic core and are matched to the fundamental frequency, may be sensitive to such disturbances and may malfunction, sending erroneous signals.
3 They may cause magnetic disturbances and noise in communication networks in the vicinity as discussed above.
4 They may also affect the performance of electronic equipment operating on the same system, such as a computer or a static power factor correction relay.
5 Increased errors in all types of measuring instruments, which are calibrated at a fundamental frequency.
6 Possible resonance and ferro-resonance effects (Section 20.2.1(2)) between the reactances of the generator and the transformer windings and the line capacitances. In addition to the line capacitors, it is possible that the circuit is completed through the ground coupling capacitances (Section 20.1 and Figure 20.2) and give rise to high to very high system voltages. The effect will be the same, whether the system is grounded or not. The ground coupling capacitances providing the return path, as through a grounded neutral. This phenomenon would normally apply to an EHV system.

By the harmonic flux and frequencies
Increased iron losses in the inductive machines, operating on such a system, due to saturation effects (equations (1.12) and (1.13).

23.6a Generation of triple harmonics in an inductive circuit

A hysteresis loss in an electromagnetic circuit will occur due to molecular magnetic friction (magnetostriction), as discussed in Section 1.6.2(A-iv). This causes a distortion in voltage and current by distorting their natural sinusoidal waveforms. This distortion in the natural waveforms, in terms of magnetizing current I_m, induced e.m.f. e and magnetic flux ϕ of the magnetic circuit is the source of generating triple harmonic quantities, the magnitude of which will depend upon the shape of the hysteresis loop, which is a function of the core material. A fluctuation in the system voltage which causes a change in the flux density B (equation (1.5)) also adds to the triple harmonic quantities. Permeability μ of the magnetic core is different at different flux densities B. This results in giving rise to triple harmonics due to magnetic friction (magnetostriction). Wherever the switching of a capacitor bank is more frequent, the generation of triple harmonic voltages is more severe.

Uneven distribution of loads causes an imbalance in the supply system which also generates triple harmonic voltages. This is more pronounced in LT systems than in HT systems due generally to fewer switching operations and an almost balanced load distribution in HT systems (also refer to Table 23.1). But an HT system too is not free from third harmonics due to unequal overhead line impedances which may be caused by unequal spacings between the horizontal and vertical formation of conductors, asymmetrical conductor spacings and hence an unequal induced magnetic field. Overexcitation of transformer cores, which may be a result of voltage fluctuations or a load rejection, may also cause triple harmonic voltages. When capacitors are used to improve the system's regulation, they may cause excessive voltages during offpeak periods, resulting in an oversaturation of the transformer cores and the generation of triple harmonics.

23.6b Generation of harmonics by a power electronic circuit

Another reason for harmonic disorders is the presence of power electronic circuits in the system. The loads supplied through solid-state devices such as thyristors generate non-sinusoidal waveforms. These waveforms give rise to harmonic currents and distort the supply voltage. Line-commutated converters and frequency converters employed for a.c./d.c. drives, electrolytic processes, inverters, a.c. controllers, d.c. choppers, cyclo-converters, and SCR rectifiers (for details refer to Chapter 6) are examples of electronic applications that may generate harmonic quantities and influence the normal current drawn by a power capacitor. With advances in power electronics, modern power systems have a wider application of solid-state technology in the control of induction motors and d.c. motor drives as discussed in Section 6.9. There is therefore more likelihood of the presence of harmonics in the system that may result in high to very high harmonic currents and consequent harmonic voltages. This effect is felt more on LT and also HT systems up to 11 kV where use of static controls is more prominent. For the harmonics generated by power electronic circuits, the harmonics ordinal numbers that may be present in the system are expressed by

harmonic ordinal number $N_h = nk \pm 1$

where n = pulse number; 3 for a three phase and 6 for a hexaphase power electronics circuit, etc.

This represents the type of converter connection and identifies the number of successive commutations (i.e. the number of discrete segments of the d.c. waveform, Figure 23.10) the rectifier unit will conduct during each cycle of a.c. power input. The higher the pulse number,

Parameters	Likely waveforms generated by a rectifier unit in its output for each cycle of a.c. input, for different numbers of pulses				
	$n = 1$ 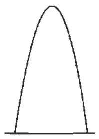	$n = 2$ 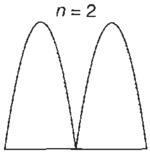	$n = 3$ 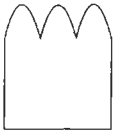	$n = 6$ 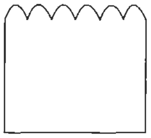	$n = 12$ 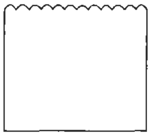
$\frac{\text{Effective value}^*}{\text{Mean value}}$ [Form factor or harmonic distortion factor]	1.57	1.11	1.017	1.0009	1.00005
$\frac{\text{Peak value}}{\text{Mean value}}$ (Rectifier peak factor)	3.14	1.57	1.21	1.05	1.01

* – rms value of all harmonics

Figure 23.10 The content of ripples for different number of pulses (n)

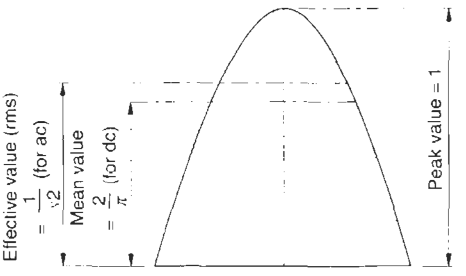

Form factor = $\frac{1/\sqrt{2}}{2/\pi}$ = 1.11 Rectifier factor = $\frac{1}{2/\pi}$ = 1.57

Note: When referring to the d.c. side, it is the mean value and when referring to the a.c. side, it is the effective value that is more relevant

Figure 23.11 Effective and mean values in a sinusoidal waveform

the nearer will the mean and effective values of the rectified voltages approaching the peak value, as illustrated in Figure 23.10. Six pulse rectifiers are therefore considered ideal to achieve a near-peak voltage in both its mean and effective values and are more commonly used. In which case: form factor or harmonic distortion factor

$$\frac{\text{Effective value (r.m.s. value of all harmones}}{\text{Mean value}} \simeq 1.0009$$

and rectifier peak factor, i.e. $\frac{\text{Peak value}}{\text{Mean value}} \simeq 1.05$

as against the values indicated in Figure 23.11. Figure 23.10 illustrates some common types of pulse numbers, the likely shape of their waveforms and the approximate values of their 'form factors' and 'rectifier peak factors'.

k = 1st, 2nd, 3rd, and 4th etc. waveforms

For k = 1 and 2, the harmonic sequence will be

(i) for a three-phase thyristor circuit
  3 × ± 1, i.e. 2 and 4, and
  3 × 2 ± 1, i.e. 5 and 7, etc.
(ii) for a hexaphase thyristor circuit
  6 × 1 ± 1 = 5 and 7, and
  6 × 2 ± 1 = 11 and 13, etc.

The plus sign indicates a positive sequence harmonic and the minus sign a negative sequence harmonic. Their effect is same as for the positive and the negative sequence components discussed in Section 12.2(v) and causes pulsation in the magnetic field and hence, in the torque of a rotating machine.

23.6c Resonance

Yet another reason for harmonic disorder in a power circuit is the occurrence of series or parallel resonance or a combination of both. Such a situation may occur at certain frequencies generated by the harmonic generating sources in the system. The capacitors installed in the system magnify the same.

All such harmonics are undesirable for the system and the equipment connected to it. Refer to Table 23.1 for the likely magnitudes of harmonic quantities which may be present in a typical power system.

23.6.1 Theory of circulation of triple harmonic quantities in an a.c. system

Triple harmonic quantities are unbalanced quantities and can exist only on a system, which has a grounded neutral. The configuration of the windings of the source generating the harmonics, the system to which it is connected, and its grounding conditions, thus play a significant role in transmitting the harmonics to the whole system as discussed below:

When the system is star connected

1 **Isolated neutral** In a symmetrical three-phase three-wire star-connected system the summation of all phase quantities, voltage or current will be zero, as illustrated in Figure 21.7. When a few harmonics exist in such a system, this balance is disturbed and the sum of these quantities is not zero. The third harmonic quantities can find their outlet only through a neutral of the system. Since there is no neutral available in this system, no third harmonic quantities will flow into or out of the supply system and affect the equipment associated with it or a communication network if existing in the vicinity (Figure 23.12(a)).
2 **Ungrounded neutral (floating neutral)** However, when the neutral is provided, each phase can complete its own circuit through the neutral, provided the connections are made so that it can complete its circuit through the neutral. The supply system would contain no third harmonic, as it cannot drainout this through a floating neutral. The supply system, being balanced, would contain no harmonic as noted above. In each phase to neutral, however, the third harmonic may exist but of a lesser magnitude, depending upon the impedance of the system. (Figure 23.12(b)).
3 **Grounded neutral** When the neutral is grounded, the third harmonic quantities will be able to find their way through it. This system can thus be considered to contain the third harmonic quantities and will affect operation of the equipment connected on it and communication networks if existing in the vicinity (Figure 23.12(c)).

When the system is delta connected

This is a similar system to that discussed in 1 above and will contain no third harmonic quantities (Figure 23.12(d)).

23.7 Effective magnitude of harmonic voltages and currents

A waveform containing harmonics may be considered to be a standard sinusoidal waveform superimposed with the other harmonic waveforms. Figure 23.7 illustrates a standard sinusoidal waveform, superposed with third and

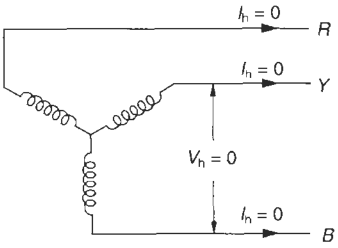

Harmonic circuit is not completed,
∴ $I_h = 0$ $V_h = 0$

(a) Isolated neutral system

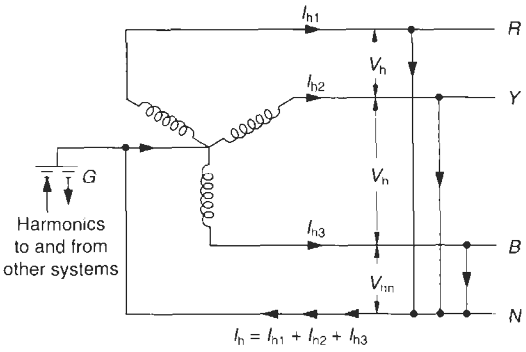

Harmonics can circulate freely to other systems and from other systems to this system

I_h and V_{hn} = High

(c) Grounded neutral system

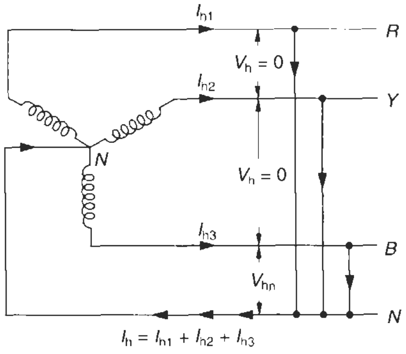

Harmonic circuit is made only internally. There is no flow of harmonics to outside or from outside to the system,

∴ I_h = low $V_h = 0$ V_{hn} = low

(I_h and V_h are harmonic quantities)

(b) Ungrounded neutral system

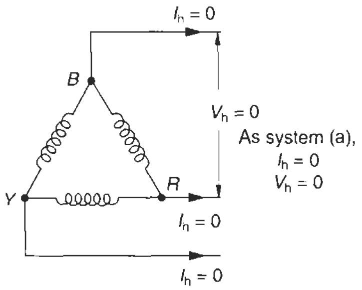

(d) Delta connected system

Figure 23.12 Circulation of triple harmonic quantities

fifth harmonic waveforms. Higher harmonics are not shown being of lower magnitudes. Harmonics tend to diminish in amplitude at higher orders, i.e. amplitude at h3 > h5 > h7 etc., where h3, h5 and h7 etc. are the harmonic quantities at the third, fifth and seventh harmonic orders respectively. The effective value under the influence of such harmonics will be the summation of all such harmonics present in the system. Each harmonic wave may have a different phase relationship with the fundamental waveform, as illustrated in the figure, and add or subtract from it to give the waveform a shape somewhat of a pulsating nature as shown in Figure 23.7.

Accurate measurement of harmonic quantities and their cumulative effect is a complex subject, and is not possible to determine theoretically with the help of algebraic equations. But it can be easily measured with the help of a harmonic analyser. Cigre (1989) has made a comprehensive study of the likely harmonics and their amplitudes that may be present in a power system. These are briefly described in Table 23.1.

Inference

The study based on which the table is produced has revealed the following important aspects:

1 Hexaphase electronic circuits generate maximum harmonic disorders.
2 Inductive equipment generates moderate amounts of harmonic disorders, except the third harmonics on an LT system.
3 The odd harmonics (non-multiples of 3), generated by hexaphase rectifiers, are more severe than any other harmonic disorders present in the system, except LT systems, where third harmonics too are pronounced. An LT system and the devices connected on it must take cognisance of these effects and suitable measures be taken, either to diminish such effects or to select higher ratings of the devices to operate on such systems without overloading. HT systems must take particular cognizance of odd harmonics.

Table 23.1 Typical harmonic orders and their magnitudes as studied in a power system

Odd harmonics				*Triple harmonics*				*Even harmonics*			
Likely harmonic voltage (%) *System voltage*				*Likely harmonic voltage (%)* *System voltage*				*Likely harmonic voltage (%)* *System voltage*			
Harmonic order n	Up to 1 kV	Above 1–33 kV networks and primary distribution. 33–100 kV	Above 33–100 kV networks and secondary transmission above 100–220 kV	Harmonic order n	Up to 1 kV	Above 1–33 kV networks, and primary distribution, 33–100 kV	Above 33–100 kV networks and secondary transmission above 100–220 kV	Harmonic order n	Up to 1 kV	Above 1–33 kV networks and primary distribution, 33–100 kV	Above 33–100 kV networks and secondary transmission above 100–220 kV
5	4 to 6	5 to 6	1 to 2	3	4 to 5	1.5 to 2.5	0.8 to 1.5	2	1 to 2	1 to 1.5	1 to 1.5
7	4 to 5	4 to 5	1 to 2	9	0.8 to 1.5	0.8 to 1.5	0.5 to 1	4	0.5 to 1	0.5 to 1	0.5 to 1
11	2.5 to 3.5	2.5 to 3.5	0.8 to 1.5	15	≤ 0.3	≤ 0.3	≤ 0.3	6	≤ 0.5	0.2 to 0.5	0.2 to 0.5
13	2 to 3	2 to 3	0.8 to 1.5	21	≤ 0.2	≤ 0.2	≤ 0.2	8	≤ 0.5	≤ 0.2	≤ 0.2
17	1 to 2	1 to 2	0.5 to 1								

Source IEEE 519, for general and dedicated power systems.

Notes

1 Still higher harmonics have not been considered, as they are of even lower magnitudes.

2 The values are expressed as a percentage of the fundamental voltage.

3 The above data is for a general reference. Actual harmonic distortion on the system during operation will depend upon the types of connected loads and their operating conditions, such as variation in its loading and fluctuations in the system voltage.

23.7.1 Recommended magnitudes of harmonic disorders

For safe operation of power and control equipment and devices operating in such systems it is essential to limit the amplitude of the voltage distortions to a safe value by installing filter circuits based on the system's actual operating conditions. These limits are recommended by leading standards organizations are:

1 UK engineering recommendation – G5/3 (British Electricity Council Standard). For harmonic voltage distortions in the system as in Table 23.2.
2 IEEE-519: Guide for harmonic control and reactive compensation of static power converters, for harmonic voltage distortions of general and dedicated power system, as in Table 23.3.

Table 23.2 Premissible individual and total harmonic voltage distortions – as in G5/3, UK engineering recommendations

Nominal system voltage	*Individual harmonic voltage distortions*		*Total harmonic distortions*
kV	*Odd(%)*	*Even (%)*	*%*
0.415	4	2	5
6.6–11	3	1.75	4
33–66	2	1	3
132	1	0.5	1.5

Table 23.3 Premissible voltage distortions as in IEEE-519 for general power systems and dedicated systems[a]

Nominal system voltage kV	*General power systems %*	*Dedicated systems %*
2.4–69	5	8
115 and above	1.5	1.5

[a] A dedicated system is one that is servicing only the converters or loads that are not influenced by voltage distortions.

23.8 When harmonics will appear in a system

There are three possible ways in which harmonics may appear in a power system:

1 When the system voltage is linear (an ideal condition that would seldom exist) but the load is non-linear: The current will be distorted and become non-sinusoidal. The actual current I_h (r.m.s.) (equation (23.2)) will become higher than could be measured by an ammeter or any other measuring instrument, at the fundamental frequency. Figure 23.13 illustrates the difference between the apparent current, measured by an instrument, and the actual current, where

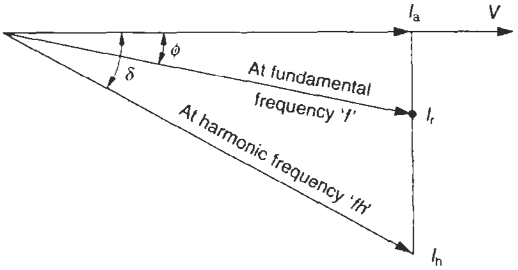

Figure 23.13 Rise in apparent current due to harmonic quantities

I_a = active component of the current
I_r = apparent or current measured by an ammeter
I_h = actual current due to harmonic distortions

All the above are r.m.s. quantities.

ϕ = displacement angle between the system voltage and apparent current, defining the p.f. of the load
δ = actual phase displacement due to harmonic distortions. It is the actual p.f. which is less than measured for a system containing harmonic disorders.

Quantity I_h is composed of two components:

- One at fundamental frequency. Its displacement with the fundamental voltage is termed the displacement factor, and for a linear voltage and linear load will define the p.f. of the load, i.e.

$$\frac{I_a}{I_r} = \cos \phi$$

- The second component is caused by the different harmonic quantities present in the system when the supply voltage is non-linear or the load is non-linear or both. This adds to the fundamental current, I_r and raises it to I_h. Since the active power component I_a remains the same, it reduces the p.f. of the system and raises the line losses. The factor I_r/I_h is termed the distortion factor. In other words, it defines the purity of the sinusoidal wave shape.

$$\therefore \cos \delta = \text{displacement factor} \times \text{distortion factor}$$

$$= \frac{I_a}{I_r} \times \frac{I_r}{I_h}$$

For example, if the apparent p.f. is 0.9, a distortion factor of 0.85 will reduce it to 0.9 × 0.85 or 0.765.

2 When the supply system itself contains harmonics and the voltage is already distorted: now even the linear loads will respond to such voltage harmonics and draw harmonic currents against each harmonic present in the system, and generate the same order of current harmonics.
3 When the system voltage and the load are both non-linear: a condition which is common. The voltage harmonics will magnify and additional harmonics may generate, corresponding to the non-linearity of the

load, and hence further distort an already distorted voltage waveform.

Harmonics will mean

- Higher voltage and current than apparent
- Adding to line loading and losses, and
- Reducing the actual load p.f.

Harmonic effects are reduced by the use of shunt capacitors installed to improve the p.f. of the system or an individual load, as they provide a very low impedance path to harmonic quantities and absorb them. But using shunt capacitors alone is not sufficient as at certain harmonic frequencies, the capacitive reactance of these capacitors, along with leakage capacitance C_0 of the line, if it is an HV or EHV line (Table 24.1(b)) may tune up with the line inductive reactance L and cause a series or parallel resonance and develop high voltages. This phenomenon will be more apparent on an HV and EHV system than an LT system. On LT systems, the line resistance itself is enough to provide an in-built dampening effect to a possible resonance ($z = R_0$ at least). To avoid resonance, filter-circuits are used. Filter-circuits may be tuned for the lowest harmonic content or for each harmonic separately as discussed later, when the system is required to be as near to sinusoidal waveform as possible. The system may contain second, third and fifth and higher harmonics, but it may be sufficient to tune it to just below the fifth harmonic, which will be able to suppress most of the other harmonics also to a great extent, as it will make the circuit inductive for all harmonics.

In an HT system, either the star is not grounded or it is a delta-connected system and hence the third harmonic is mostly absent, while the content of the second harmonic may be too small to be of any significance. For this purpose, where harmonic analysis is not possible, or for a new installation where the content of harmonics is not known, it is common practice to use a series reactor of 6% of the reactive value of the capacitors installed. This will suppress most of the harmonics by making the circuit inductive, up to almost the fourth harmonic, as derived subsequently. Where, however, second harmonics are significant, the circuit may be tuned for just below the second harmonic. To arrive at a more accurate choice of filters, it is better to conduct a harmonic analysis of the system through a harmonic analyser and ascertain the actual harmonic quantities and their magnitudes present in the system, and provide a correct series or parallel filter-circuits for each harmonic.

As noted from general experience, except for specific large inductive loads such as of furnace or rectifiers, the fundamental content of the load current is high compared to the individual harmonic contents. In all such cases, it is not necessary to provide a filter-circuit for each harmonic unless the current is required to be as close to a sinusoidal waveform as possible, to cater to certain critical loads or instruments and devices or protective schemes operating in the system, where a small amount of harmonics may lead to malfunctioning of such loads and devices. Otherwise only the p.f. needs be improved to the desired level. Also to eliminate a parallel resonance with the source reactance, an inductor equivalent to 6% value of the capacitive reactance can be provided in series with the shunt capacitors.

If there are many large or small consumers that a distribution line is feeding, it is possible that the voltage of the network may be distorted beyond acceptable limits. In this case it is advisable to suppress these harmonics from the system before they damage the loads connected in the system. Preferable locations where the series inductor or the filter-circuits can be installed are:

1. At the supply end and/or
2. At the receiving end of the consumer, using power at HT and generating high harmonics (e.g. rolling mills, induction and arc furnaces, electrolysis plants, chemicals and paper mills). Electricity companies will always prefer the consumers to suppress the harmonics at their end. Even if this practice is adopted by some, small harmonics generated by many small consumers, who may not take any preventive steps to contain the harmonics generated by their plant, may still exist in the system. As a result, the distribution network may contain some harmonics which affect the performance of other loads in the system. If the level of harmonics is unacceptably high (Tables 23.2 and 23.3) they must be suppressed at the supply end.

23.9 Filter circuits: suppressing harmonics in a power network

The use of a reactor in series with the capacitors will reduce the harmonic effects in a power network, as well as their effect on other circuits in the vicinity, such as a telecommunication network (see also Section 23.11 and Example 23.4). The choice of reactance should be such that it will provide the required detuning by resonating below the required harmonic, to provide a least impedance path for that harmonic and filter it out from the circuit. The basic idea of a filter circuit is to make it respond to the current of one frequency and reject all other frequency components. At power frequency, the circuit should act as a capacitive load and improve the p.f. of the system. For the fifth harmonic, for instance, it should resonate below 5 × 50 Hz for a 50 Hz system, say at around 200–220 Hz, to avoid excessive charging voltages which may lead to

- Overvoltage during light loads
- Overvoltage may saturate transformer cores and generate harmonics
- Failure of capacitor units and inductive loads connected in the system.

It should be ensured that under no condition of system disturbance would the filter circuit become capacitive when it approaches near resonance. To achieve this, the filter circuits may be tuned to a little less than the defined harmonic frequency. Doing so will make the L and hence X_L always higher than X_C, since

$$L = \frac{1}{(2\pi f)^2 \cdot C} \text{ [for } X_L = X_C \text{]}, \quad \therefore L \propto \frac{1}{f^2}$$

This provision will also account for any diminishing variation in C, as may be caused by ambient temperature, production tolerances or failure of a few capacitor elements or even of a few units during operation.

The p.f. correction system would thus become inductive for most of the current harmonics produced by power electronic circuits and would not magnify the harmonic effects or cause disturbance to a communication system if existing in the vicinity (see Figure 23.14). A filter circuit can be tuned to the lowest (say the fifth) harmonic produced by an electronic circuit. This is because LT capacitors are normally connected in delta and hence do not allow the third harmonic to enter the circuit while the HT capacitors are connected in star, but their neutral is left floating and hence it does not allow the third harmonic to enter the circuit. In non-linear or unbalanced loads, however, the third harmonic may still exist. For a closer compensation, uni-frequency filters can be used to compensate individual harmonic contents by tuning the circuit to different harmonics, as illustrated in Figures 23.15(a) and (b). For more exact compensation, the contents and amplitudes of the harmonic quantities present in the system can be measured with the help of an oscilloscope or a harmonic analyser before deciding on the most appropriate filter circuit/circuits. Theoretically, a filter is required for each harmonic, but in practice, filters adjusted for one or two lower frequencies are adequate to suppress all higher harmonics to a large extent and save on cost.

Refer to Table 23.1, which shows the average cumulative effect of all the harmonics that may be present in a power system. If we can provide a series reactor of 6% of the total kVAr of the capacitor banks connected on the system, most of the harmonics present in the system can be suppressed. With this reactance, the system would be tuned to below the fifth harmonic (at 204 Hz) for a 50 Hz system as derived below.

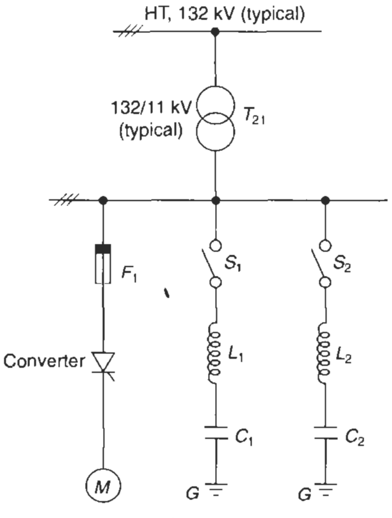

L_1 and L_2 are reactors

Figure 23.14 Compensation of harmonic currents by the use of reactors in the capacitor circuits

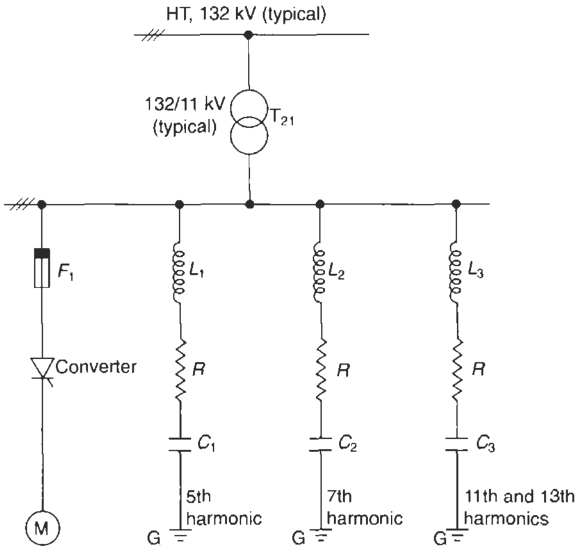

Filter circuits to compensate the harmonics

R = Resistance to limit the fault level

Figure 23.15(a) Compensation of harmonics by tuning each capacitor circuit at different harmonics

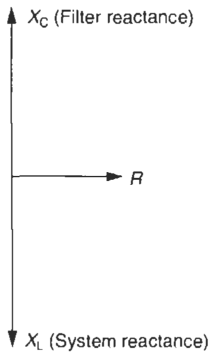

If $X_L \simeq X_c$ then $Z \simeq R$

Figure 23.15(b)

If X_L is the 6% series reactance of the value of the shunt capacitors installed, then

$$X_L = 0.06\, X_C$$

or $$2\pi f_L = \frac{0.06}{2\pi f_C}$$

where L = inductance of the series reactor in henry and
C = capacitance of the shunt capacitors in farad

or $$LC = \frac{0.06}{(2\pi f)^2}$$

When such a reactance is used to suppress the system harmonics it will resonate at a frequency f_h such that

$$2\pi f_h \cdot L = \frac{1}{2\pi \times f_h C}$$

or $$f_h = \frac{1}{2\pi \sqrt{LC}}$$

$$= \frac{2\pi f}{2\pi \sqrt{0.06}}$$

$$= \frac{50}{\sqrt{0.06}} \text{ for a 50 Hz system}$$

$$\simeq 204 \text{ Hz, i.e. at the fourth harmonic.}$$

But when the third and/or second harmonics are also present in the system, at a certain fault level it is possible that there may occur a parallel resonance between the capacitor circuit and the inductance of the system (source), resulting in very heavy third or second harmonic resonant currents, which may cause failure of the series reactor as well as the capacitors. In such cases, a 6% reactor will not be relevant and a harmonic analysis will be mandatory to provide more exacting filter circuits.

It is pertinent to note that since a filter circuit will provide a low impedance path to a few harmonic currents in the circuit (in the vicinity of the harmonic, to which it has been tuned) it may also attract harmonic currents from neighbouring circuits which would otherwise circulate in those circuits. This may necessitate a slightly oversized filter circuit. This aspect must be borne in mind when designing a filter circuit for a larger distribution network having more than one load centre.

It is, however, advisable to conduct a harmonic study of the system to select a more appropriate size of reactor, particularly where the installation is expected to experience high harmonic disorders.

Use of a reactor will enhance the voltage across the capacitor banks and must be considered in the design of the capacitor units. Refer to Figures 23.16(a) and (b) illustrating this. If

V_{ph} = system voltage

V_C = voltage across the capacitor banks = $I_C \cdot X_C$

V_L = voltage across the series reactor = $I_C \cdot X_L$

where

X_C = capacitive reactance

X_L = inductive reactance, and

I_C = current through the capacitor circuit

then

$$V_{ph} = V_C - V_L \text{ (phasor diagram, Figure 23.16(b))}$$
$$= I_C X_C - I_C X_L$$

and the rise in voltage across the capacitor banks, as a ratio of the system voltage

$$\frac{V_C}{V_{ph}} = \frac{I_C X_C}{I_C X_C - I_C X_L} = \frac{X_C}{X_C - X_L} \qquad (23.8)$$

For a series reactor of 6%, for instance,

$$\frac{V_C}{V_{ph}} = \frac{X_C}{X_C - .06X_c} = 1.0638$$

That is, the voltage across the capacitor banks will increase by 6.38%. This voltage must be considered in the design of capacitor units.

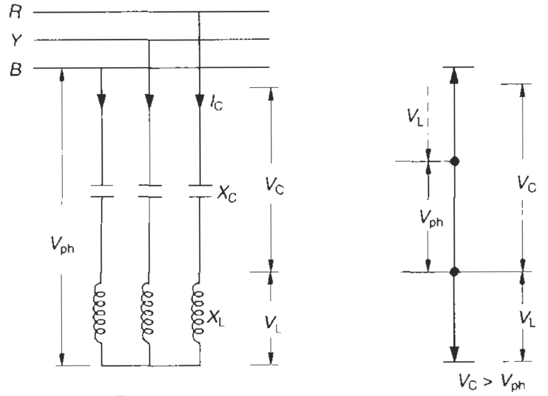

(a) Power diagram

(b) Phasor diagram

Figure 23.16 Voltage across the capacitor units rises with the use of series reactors

Similarly, the third harmonic may also be suppressed by grounding the generator or the transformer neutral through a suitable impedance (LC circuit), as discussed in Section 23.5.2(c) and equation (23.6).

23.9.1 Compensating for the series reactor

When a capacitor circuit is compensated through a series reactor, either to suppress the system harmonics or to limit the switching inrush currents (Section 23.11) or both, it will require suitable adjustment in its voltage and capacitive ratings. The series reactor will dampen the switching currents but consume an inductively reactive power and offset an equivalent amount of capacitive kVAr, and require compensation. The following example will elucidate this.

Example 23.1

To determine the basic parameters of a 6% series reactor and its capacitive compensation, consider Example 23.6 with 3000 kVAr banks (1000 kVAr per phase) rated for 33.4 kV:

- Then the voltage rating of the capacitor units should be chosen for

$$= 1.0638 \times \frac{33.4}{\sqrt{3}} \qquad \text{from equation (23.8)}$$

say, $$= \frac{35.5}{\sqrt{3}} \text{ kV instead of}$$

$$\frac{33}{\sqrt{3}} \text{ or } \frac{34}{\sqrt{3}} \text{ kV} \qquad \text{(see Figure 23.17)}$$

- Since the rating of the series reactor is = 0.06 × 3000 = 180 kVAr.
  The capacitors' rating must be enhanced by the rating of the reactor to obtain the same level of effective kVAr.

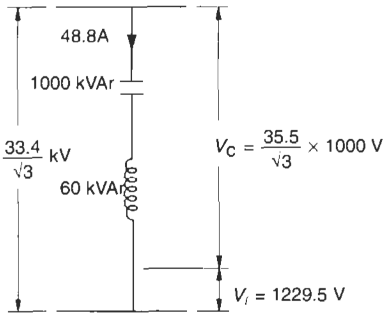

Figure 23.17 Phasor diagram for Example 23.1

∴ The rating of the capacitor banks should be chosen for

= 3000 + 180

= 3180 kVAr.

- For the basic parameters of the reactor on a per phase basis

$$I_C = \frac{1000}{35.5/\sqrt{3}}$$

$$= 48.8 \text{ A}$$

and rating of reactor, $V_1 \cdot I_C = 60$ kVAr

$$\therefore \quad V_1 = \frac{60 \times 1000}{48.8} \text{ V}$$

$$= 1229.5 \text{ V}$$

$$\text{and} \quad X_L = \frac{1229.5}{48.8}$$

$$= 25.2 \ \Omega$$

If this is designed for, say, 200 Hz, then its inductance

$$L = \frac{25.2}{2 \times \pi \times 200} \text{ H}$$

$$= 20 \text{ mH}$$

23.9.2 Studying and nullifying the effects of harmonics

Example 23.2

A distribution network 33 kV, three-phase 50 Hz feeding an industrial belt with a number of medium-sized factories some with non-linear loads and some with static drives and some with both. It was observed that while the lines were apparently running reasonably loaded, the active power supplied was much below the capacity of the network. Accordingly, a harmonic study of the network was conducted and it was found that despite localized p.f. control by most factories, the p.f. of the network itself was well below the optimum level and the voltage was also distorted by more than was permissible. To improve this network to an acceptable level, we have considered the following load conditions, as were revealed through the analysis.

Rating of primary distribution transformer = 30 MVA, 132/33 kV

Z_p = 10% (after applying the negative tolerance)

I_r = 525 A (Figure 23.18(a))

Rating of the secondary distribution transformer = 30 MVA, 33/0.4 kV,

Z_p = 10% (after applying the negative tolerance)

Load currents at different harmonics are recorded as follows:

Harmonic order	*Load current (A)*
1 (fundamental)	400
3	[a]
5	50
7	27.5
9	[a]
11	10
13	5

[a] The third harmonic was almost absent, hence it was not considered. The second and other even harmonics were also insignificant. Similarly, higher harmonics (above the thirteenth) were also insignificant, hence were not considered for ease of illustration.

∴ Actual loading of the system.

$$I_h = [400^2 + 25 \times 50^2 + 49 \times 27.5^2 + 121 \times 10^2 + 169 \times 5^2]^{1/2} \qquad (23.2)$$

= 525.2, say, 525 A.

The ampere meters, however, indicated only 400 A. While it appeared that the line was not fully loaded, in fact, it was loaded to its rated capacity of 525 A and was utilized by only 400×0.88, i.e. 352 A or $\frac{352}{525}$ i.e. by 67%, considering the system p.f. at 0.88.

Let us assume the following line parameters:
Phase displacement at fundamental frequency, i.e. apparent p.f. as measured by a normal p.f. meter.

$\cos \phi_1 = 0.88$ lagging (Figure 23.18(a))

$\therefore \quad \phi_1 = 28.36°$.

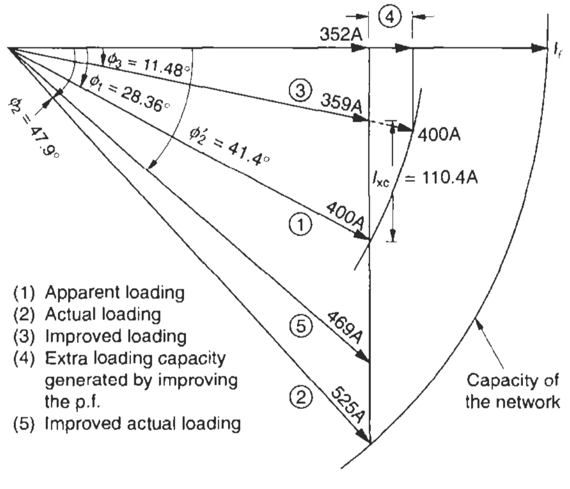

Figure 23.18(a) Enhanced capacity utilization of the network with the improved p.f.

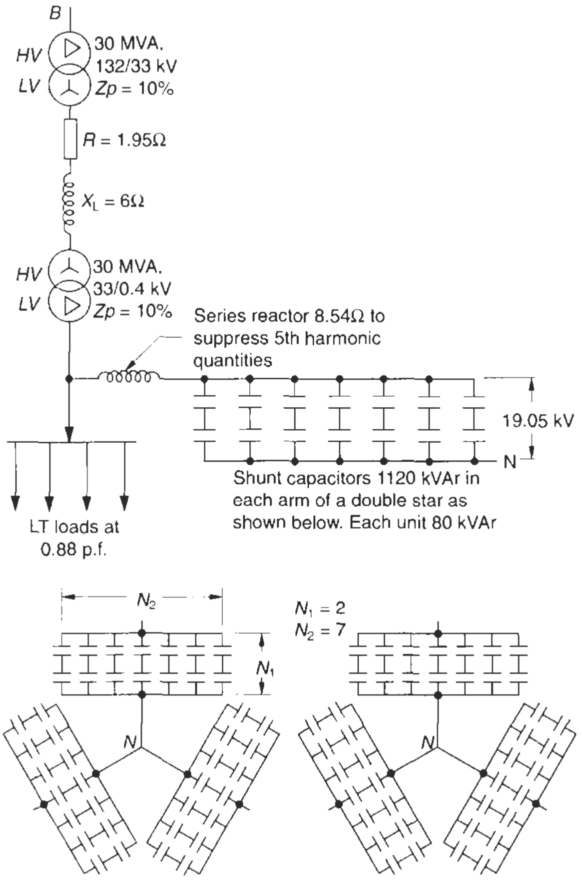

Arrangement of capacitors in double star, 1120 kVAr in each arm.

Figure 23.18(b) Network of Figure 24.25 shown with shunt compensation

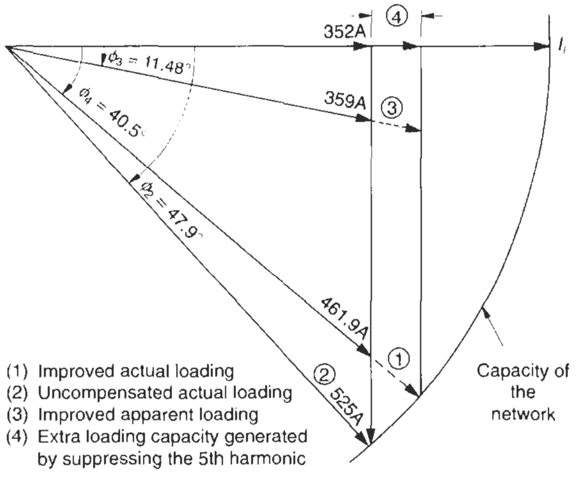

Figure 23.18(c) Reducing the actual loading of line by tuning for the fifth harmonic

Actual, p.f., $\cos \phi_2 = \dfrac{352}{525}$

$= 0.67$

$\therefore \quad \phi_2 = 47.9°$

Let us improve the apparent load p.f. to 0.98

i.e. $\cos \phi_3 = 0.98$

and $\quad \phi_3 = 11.48°$

From Example 24.3 and Figure 24.25(b) inductive reactance of line = 6 Ω per phase.

Reactance of each transformer = 3.63 Ω.

Total inductive reactance of the network = 13.26 Ω per phase

$\therefore \quad$ line inductance $L = \dfrac{13.26}{2\pi f}$

$= 42.23$ mH/phase

Since the p.f. is to be improved from 0.88 to 0.98

∴ Shunt reactive compensation required

$I_{XC} = 400 [\sin \phi_1 - \sin \phi_3]$

$= 400 [\sin 28.36 - \sin 11.48]$

$= 400 [0.475 - 0.199]$

$= 110.4$ A

and kVAr required $= \sqrt{3} \times 33 \times 110.4$

$= 6310$ kVAr

Say, 6300 kVAr

The shunt capacitors can be provided on the LT or the HT side, whichever is more convenient. In the above case, since it is large, the HT side of the load-end transformer will be more convenient. The receiving-end transformer, however, will now be operating under more stringent conditions that must be taken in account or the capacitors may be provided on the LT side to relieve this transformer also from excessive currents. In Figure 23.18(b) we have considered them on the LT side.

Improved actual p.f., $\cos \phi_2' = \dfrac{0.98}{0.88} \times 0.67 \simeq 0.75$

$\therefore \quad \phi_2' = 41.4°$

and improved actual current

$= \dfrac{0.67}{0.75} \times 525$

$= 469$ A (Figure 23.18(a))

and improved apparent line current $= 400 \times \dfrac{0.88}{0.98} = 359$ A

and $X_C = \dfrac{\text{kV}^2 \times 1000}{\text{kVAr}}$

$= \dfrac{33^2 \times 1000}{6300}$

$= 172.86\ \Omega$

$\therefore \quad C = \dfrac{10^6}{2\pi \times 50 \times 172.86}\ \mu\text{F}$

$= 18.42\ \mu\text{F}$

We have ignored any leakage capacitance between line to line or line to ground at 33 kV.

Tackling the harmonics

To eliminate all the harmonic contents from the supply it is essential to provide shunt-filter circuits separately for each harmonic disorder. As this is a costly arrangement it is not followed in practice. It is enough to drain the highest (in magnitude) harmonic disorder. This will substantially improve the current and voltage waveforms and make the circuit inductive for all higher harmonics, preventing a condition of resonance at any harmonic disorder during a line disturbance. The line reactance and capacitance of the capacitors may resonate at a frequency

$$f_h = \frac{1}{2\pi\sqrt{LC}} \qquad (23.6)$$

$$= \frac{1}{2\pi} \times \frac{1}{\sqrt{42.23 \times 10^{-3} \times 18.42 \times 10^{-6}}}$$

$$= 180.5 \text{ Hz}$$

say, at about the third or fourth harmonics. But both these harmonics are considered negligible in the system hence, the filter circuit will be essential for the fifth harmonic. The series reactor required in the capacitor circuit is tuned, say, at about 225 Hz to be on the safe side, to account for variation in the line parameters and the inductor itself to keep the circuit inductive under all conditions of line disturbances:

$$\therefore \quad 2\pi \times 225 \times L' = \frac{1}{2\pi \times 225 \times C}$$

$$\text{or} \qquad L' = \frac{1}{(2\pi)^2 \times (225)^2 \times 18.42 \times 10^{-6}}$$

$$= 27.2 \text{ mH}$$

$$\text{or} \qquad XL' = 2\pi \times f \times 27.2 \times 10^{-3}$$

$$= 8.54\ \Omega \text{ at fundamental frequency.}$$

This is about 4.94% of X_C, and must be compensated by providing additional capacitor units to maintain the required level of p.f. as discussed in Section 23.9.1.

$\therefore$ Modified size of capacitor banks = 6300 × 1.0494

= 6611.2 kVAr

Let us choose a bank size of 6720 kVAr for easy selection of each unit. To adopt a better protective scheme, let us select the configuration of a double star (Figure 25.5(b)).

$\therefore$ Each bank for each arm of a double star

$$= \frac{6720}{6}$$

$$= 1120 \text{ kVAr}$$

Let us arrange them two in series and seven in parallel, based on recommendations made in Section 25.5.1 (iii) and as shown in Figure 23.18(b).

$$\therefore \text{ Size of each unit} = \frac{1120}{2 \times 7} = 80 \text{ kVAr}$$

$$\text{and voltage rating} = \frac{36^*}{\sqrt{3} \times 2}$$

$$= 10.39 \text{ kV}$$

**Note*

The capacitor units are generally designed for the highest system voltage, as shown in Tables 26.4 or 13.1 unless specified for still higher voltages by some users. Accordingly equation (23.8) does not apply in this case. Some local electricity distribution authorities, depending upon the likely maximum voltage variation on their systems, may sometimes ask for still higher voltages. But such distribution networks may not remain stable in the long run and must be improved as far as possible with the use of reactive controls, as discussed later.

The above configuration or size of each unit is not mandatory and can be altered, depending upon the economics of capacitor voltage and size of units available. Protection for all types of configurations is easily available through various schemes discussed in Section 26.1.

From the above it can be inferred that for an accurate analysis of a system, particularly where the loads are of varying nature or have non-linear characteristics it is necessary to conduct a harmonic analysis. The above corrective measures will provide a reasonably stable network, operat-ing at high p.f. with the harmonics greatly suppressed. The improved actual line loading, eliminating the fifth harmonic component, which is compensated,

$$I_h' = [400^2 + 49 \times 27.5^2 + 121 \times 10^2 + 169 \times 5^2]^{\frac{1}{2}}$$

$$= 461.9\text{A as against 525 A}$$

$$\text{and improved actual p.f.} = \frac{352}{461.9}$$

$$= 0.76$$

$$\text{and} \qquad \phi_4 = 40.5^\circ$$

A phasor diagram (Figure 23.18(c)) illustrates the reduction in the actual loading and enhanced load transfer capacity of the network which can be achieved with the help of harmonic suppressions. For even better utilization, the system may be tuned for higher harmonic disorders also.

23.10 Excessive charging currents (switching inrush or making currents)

The circuit of an uncharged capacitor unit, when switched, acts like a short-circuit due to the very high natural (transient) frequency, f_s, of the switching circuit, causing the capacitor reactance X_c, to approach zero. The value of the making current will depend upon the magnitude of the applied voltage and the impedance of the circuit (motor and cables) or of the system that will form the switching circuit. In other words, it will depend upon the fault level of the circuit and the rating of the capacitor units connected in that circuit. This switching transient current, as illustrated in Figure 23.19, as such being high, will be even higher if the circuit already has some switched capacitor units due to partial discharge of the already charged units into the uncharged units, as discussed in Section 23.10.2. The behaviour of the capacitor switching circuit under various switching conditions is described below.

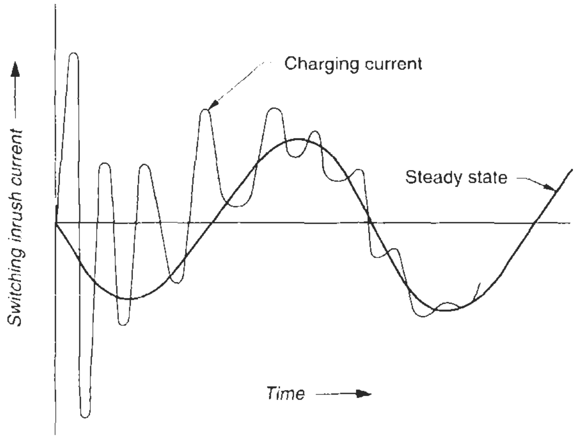

Figure 23.19 Current waveform on switching of a capacitor

23.10.1 Single-capacitor switching

Inrush current

The capacitor inrush current is a function of steady state and the transient components of the current, i.e.

$$I_m = I_s + I_{st}$$

where I_m = maximum inrush or making current when switching an uncharged capacitor unit

I_s = maximum steady-state current (capacitor peak full-load current ($\sqrt{2}\,I_C$))

I_{st} = transient component of the current, which is a function of the short-circuit power of the switching circuit, i.e. the kVA of the transformer, if a transformer is feeding the circuit, and the kVAr of the capacitor being switched.

i.e. $$I_{st} = I_s\sqrt{\frac{\text{Short-circuit kVA}}{\text{Capacitor kVAr}}}$$

$$= I_s\sqrt{\frac{I_{sc}}{I_s}}$$

$$\therefore \quad I_m = I_s\left(1 + \sqrt{\frac{I_{sc}}{I_s}}\right) \qquad (23.9)$$

When a single uncharged capacitor unit is switched on a power circuit, as illustrated in Figure 23.20, then

$$I_{sc} = \frac{V_p}{Z_{sc}}$$

and $$I_s = \frac{V_p}{Z}$$

where V_p = line to neutral peak voltage

$$= \frac{\sqrt{2}}{\sqrt{3}} \cdot V_l = 1 \text{ p.u. (Section 17.6.7)}$$

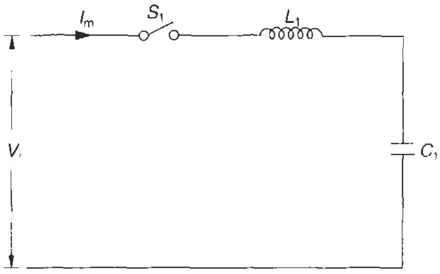

Figure 23.20 A single capacitor switching

and Z_{sc} = short-circuit impedance of the switching circuit and

Z = steady-state impedance of the switching circuit.

If R, L_1 (of cable, transformer and load inductances) and C_1 are the switching circuit parameters then

$$Z = \bar{R} + \bar{X}_{L1} - \bar{X}_{C1}$$

During a steady-state condition, i.e. at power frequency f, $X_{C1} >> X_{L1}$ and during a transient condition, i.e. during a switching operation when

$$f << f_s = \frac{1}{2\pi\sqrt{L_1 C_1}} \qquad \text{(equation (17.1))}$$

$X_{L1} >> X_{C1}$ (at surge frequency f_s)

For simplicity and to obtain a close approximation, the value of R may be considered to be negligible and therefore ignored. It may give a higher value of inrush current, which is on the safe side to select the switching device.

$$\therefore \quad Z \simeq X_{C1} = \frac{1}{2\pi \times f \times C_1} \text{ and } I_s = \frac{V_p}{X_{C1}}$$

$$\text{and } Z_{sc} \simeq X_{L1} = 2\pi \times f_s \times L_1 \text{ and } I_{sc} = \frac{V_p}{X_{L1}}$$

$$\therefore \quad I_m = I_s\left(1 + \sqrt{\frac{X_{C1}}{X_{L1}}}\right) \qquad (23.10)$$

Notes

1 If the capacitor was already charged, the switching would mean an additional impressed voltage, V_p of the trapped charge of the capacitor, i.e. up to $2V_p$ and the maximum inrush current may rise up to $2 \cdot I_m$.

2 The I_m can rise up to 5 to 25 times the normal capacitor current, I_c, as illustrated in Example 23.3.

3 The normal switching devices (switch, contactor or breaker) are normally suitable to meet such a switching requirement.

Switching frequency

This can also be expressed as

$$f_s = f\sqrt{\frac{\text{(Short-circuit kVA)}}{\text{(Capacitor kVAr)}}} = f \cdot \sqrt{\frac{X_C}{X_L}} \qquad (23.11)$$

where

f_s = switching or transient frequency
f = power frequency
X_C = power frequency capacitive reactance of the circuit, and
X_L = power frequency inductive reactance of the circuit.

Switching overvoltage

This is seen to rise up to 1.8–2 p.u. of the peak applied voltage, V_p, when switching an uncharged capacitor and around 2.6–3 p.u. when switching an already charged capacitor (Section 23.5.1).

Rating of the switching device

This is as recommended in Section 25.6 and is equally applicable to LT and HT capacitor units.

Example 23.3
Consider the same LT system of 415 V, as of Example 23.8, three-phase 50 Hz, and having a fault level of 36 MVA and employing capacitor banks of 360 kVAr.

Inrush current
Capacitor full-load current

$$I_c = \frac{360}{\sqrt{3} \times 0.415}$$
$$\simeq 500 \text{ A}$$

and static current $I_s = \sqrt{2} \times 500 = 707$ A

$$\text{and} \quad I_m = 707\left(1 + \sqrt{\frac{36 \times 1000}{360}}\right)$$
$$= 707\,(1 + 10)$$
$$= 7777 \text{ A}$$

or eleven times the capacitor peak rated current. This is when totally uncharged capacitors are switched. If the capacitors are already charged when they are switched, the inrush current may rise up to twice this, i.e. almost twenty-two times the rated peak current (but not exceeding the fault level of the system).

Note
Here we have considered the fault level of the switching circuit to be same as that of the entire system, as they are the total capacitor banks connected in the system and switched together as a single unit.

Switching frequency

$$f_s = 50\sqrt{\frac{36 \times 1000}{360}}$$
$$= 500 \text{ Hz}$$

23.10.2 Parallel switching of capacitor units

This shows yet more complex circuit behaviour and requires more detailed analysis as discussed below.

We have considered the switching of capacitor banks that are installed on one power circuit and mounted in close proximity with another set of banks of almost similar capacity such as a capacitor control panel, having a set of capacitor banks arranged to switch ON and OFF, depending upon load variations of that circuit. Capacitor units installed on the same system but not in close proximity may not influence the switching behaviour of these capacitor units as severely as when they are installed in close proximity due to the extra line impedance thus introduced.

Inrush current

In this switching, the cumulative effect of the applied voltage and the trapped charge of the already charged capacitors is of little relevance but the resultant current is extremely high as derived below.

Consider a typical circuit as shown in Figure 23.21:

$$I_m \simeq \frac{V_p}{Z_s} \quad \begin{array}{l}\text{(when the applied voltage was at its peak and}\\ \text{the switching capacitor had no trapped charge)}\end{array}$$

where I_m = peak inrush current in parallel switching
Z_s = surge impedance

$$= \sqrt{\frac{L_2}{C_{eq}}} \qquad \text{(equation (17.2))}$$

where L_2 = circuit inductance between the banks in henry (ignoring the negligible self-inductance of the capacitor banks)
C_{eq} = equivalent series capacitance of the two capacitors C_1 and C_2 in farad

$$\text{i.e.} \quad \frac{1}{C_{eq}} = \frac{1}{C_1} + \frac{1}{C_2}$$

$$\text{or} \quad C_{eq.} = \frac{C_1 \cdot C_2}{C_1 + C_2}$$

$$\therefore \quad Z_s = \sqrt{\frac{L_2(C_1 + C_2)}{C_1 \cdot C_2}} \qquad (23.12)$$

$$\text{and} \quad I_m = V_p\sqrt{\frac{C_1 \cdot C_2}{L_2(C_1 + C_2)}} \qquad (23.13)$$

This is a generalized formula to simplify the equation. In fact, the actual switching current will be much less than this, due to circuit impedance. For more accurate

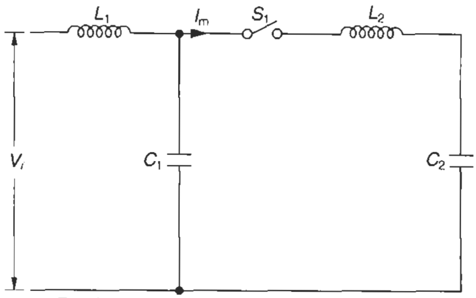

Parallel operation of capacitor bank C_2 with an already switched capacitor C_1

Figure 23.21 A simplified capacitor switching circuit results, the inductance of the capacitor banks may be introduced into the total inductance, L_2, i.e., it should be the summation of all the reactances of the capacitors already switched, plus the series reactance of the capacitor being switched. See Figure 23.22.

∴ Equivalent reactance of the capacitors already switched

$$L_{1\text{eq}} = \frac{1}{\frac{1}{L_1} + \frac{1}{L_2} + \frac{1}{L_3} + \ldots \frac{1}{L_n}}$$

$$\text{and } L_{2\text{eq}} = \frac{1}{\frac{1}{L_1} + \frac{1}{L_2} + \frac{1}{L_3} + \ldots \frac{1}{L_n}} + L_x$$

L_x = series inductance of the capacitor being switched (this is L_2 of equation (23.13))

and $C_{1\text{eq}} = C_1 + C_2 + C_3 + \ldots C_n$

(this is C_1 of equation (23.13))

The figures of $L_{2\text{eq}}$ and $C_{1\text{eq}}$ may be substituted in equation (23.13) for L_2 and C_1 respectively to derive a more accurate switching inrush current.

Notes

1 In the above discussions it is assumed that the capacitor C_2 has no trapped charge when it is switched ON. If this is not so, the current may rise up to $2 \cdot I_m$, as discussed in Section 23.10.1.

2 Field experiments have revealed that such currents may be as high as up to 15–250 times the steady state current I_s, but will last only up to the first current zero.

Switching frequency

As discussed above, a capacitor circuit is an L-C circuit, and the switching frequency f_s can be expressed as

$$f_s = \frac{1}{2\pi\sqrt{L_{2\text{eq}} \cdot C_{\text{eq}}}} \qquad \text{(equation (17.1))}$$

where

$$C_{\text{eq}} = \frac{1}{\frac{1}{C_{1\text{eq}}} + \frac{1}{C_x}} \qquad \text{(as in Figure 23.22)}$$

C_x = capacitance of the capacitor being switched

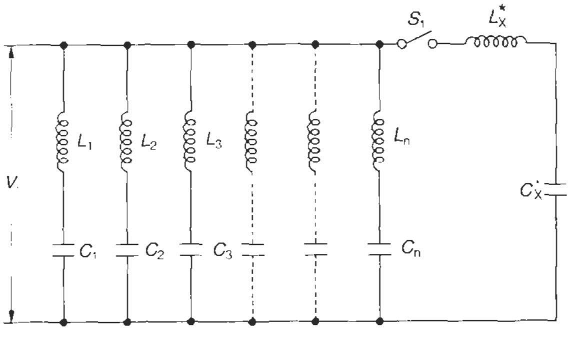

*L_x being L_2 and C_x (now being switched) is C_2 of Figure 23.21

Figure 23.22 Equivalent circuit for *n* number of capacitor bank already switched on the circuit and another (C_x) being switched

$$\text{or } C_{\text{eq}} = \frac{C_{1\text{eq}} \cdot C_x}{(C_{1\text{eq}} + C_x)}$$

$$\therefore \quad f_s = \frac{1}{2\pi}\sqrt{\frac{(C_{1\text{eq}} + C_x)}{L_{2\text{eq}} \cdot C_{1\text{eq}} \cdot C_x}} \qquad (23.14)$$

The parameters $C_{1\text{eq}}$ and $L_{2\text{eq}}$ are the same as those derived above.

The switching frequency in capacitor switching is very high. We have already witnessed this in a single capacitor unit. The situation becomes highly complicated when switching is effected in a circuit that already has a few switched capacitor units. In Example 23.4 we will see that a circuit with only 6 out of 60 kVAr capacitor units can have a switching frequency as large as over 13 kHz (in operation, it may not exceed 5–7 kHz because of the circuit's actual impedance), when five of these capacitors are already switched and the sixth is switched. This high to extremely high switching transient frequency is detrimental in giving rise to the switching inrush currents, of the order of 15 to 250 times and more, of the steady-state current I_s. Since the switching capacitive reactance is inversely proportional to the switching frequency, it offers an almost short-circuit condition during a switching operation.

Summary

1 At the instant of switching the surge impedance, Z_s (equation (23.12)), and the natural frequency of the switched circuit, i.e. the transient frequency, f_s (equation (23.14)), determines the amount of inrush current.

2 The natural (surge) frequency, f_s, of parallel capacitor switching is extremely high, of the order of 5–7 kHz or more. It may not exceed this because of the circuit's own parameters *R* and *L* that have been ignored in our analysis for easy illustration. The actual frequency, f_s, will depend upon the size of capacitors being switched compared to the capacitors that were already switched, and their corresponding inductance in the switching circuit. A high f_s will diminish the capacitive reactance of the capacitor to an almost negligible value. This leads to a near-short-circuit condition during the switching operation, causing extremely high transient inrush currents of the order of 15–250 times and even more of the capacitor's steady-state current I_s.

3 This extremely high inrush current at a frequency of almost 5–7 kHz will release an enormous amount of let-through energy during contact making,

i.e. $\propto I_m^2 \cdot t$

say $(250 \cdot I_s)^2 \cdot \dfrac{1}{2 \times 50}$

(for an I_m of $250 \cdot I_s$ occurring at a transient frequency of 6 kHz and existing up to the first current zero in a 50 Hz system).

The interrupting device, which may be a breaker or a contactor, must be suitable to sustain this energy without deterioration of or damage to its contacts, while the fuses must stay intact when provided for backup protection.

Notes

1. For air break LT switches and contactors IEC 60947-3 and IEC 60947-4-1 have specified the making capacities for heavy-duty AC-3 components as follows (also refer to Section 12.10):
   - (i) For rated current up to 100 A – 10 times the r.m.s. value
   - (ii) For rated currents beyond 100 A – 8 times the r.m.s value The manufacturers of such devices, however, may declare the making capacity of such devices to be even higher than this when the higher value may be considered to design the inductance, to limit the inrush current (Section 23.11).
   - (iii) Light-duty switches and contactors up to AC-2 duty are not suitable for such applications.
2. NEMA publication ICS.2-210 for general-purpose contactors provides data for ratings prevalent in the USA. These data are summarized as follows:
   - (i) Table 23.4 gives continuous current ratings and maximum making currents, I_s, for various sizes of contactors.
   - (ii) Choice of contactors for different values of capacitor switching currents is provided in Table 23.5.

4 The transient condition will cease to exist after the first current zero, hence the extremely short duration of such transient currents.

5 Such heavy currents are more prevalent in an HT than in an LT system. An HT system will have a much smaller impedance, Z, compared to the applied voltage, V_p, than an LT system, which will have a much higher value of Z compared to the applied voltage V_p.

Table 23.4 General-purpose contactor rating

Size of contactor	*Continuous current rating Amps (r.m.s.)*		*Maximum making current, I_s Amps (peaks)*
	Enclosed	*Open*	
00	9	10	87
0	18	20	140
1	27	30	288
2	45	50	483
3	90	100	947
4	135	150	1581
5	270	300	3163
6	540	600	6326
7	810	900	9470
8	1215	1350	14,205
9	2250	2500	25,380

Thus, the analysis conducted above to derive I_m on a parallel switching is more pertinent for an HT system, and offers only a theoretical analysis for LT systems. Nevertheless, for large LT installations such as, 2000–2500 kVA for a single circuit, as discussed in Section 13.4.1(5), employing large capacitor banks close to the feeding transformer, it may be desirable to limit the inrush current to a desirable level on the LT side also. In all probability, switching devices selected at 150% of the capacitors' normal current as in Section 25.6 will be sufficient to meet any switching contingency, even on a parallel switching.

23.11 Limiting the inrush currents

Let us refer to equation (23.13) for the inrush current, I_m, on parallel switching. If we can increase the impedance of the switching circuit by introducing a resistance R or inductance L, or both, we can easily control this current to a desired level.

Note

If we add L or R in the circuit it will increase the surge impedance, reduce the surge frequency of the switching circuit, and dampen the 90° lead surge current to a moderately leading surge current, small in magnitude and steepness. At every current zero when the contacts of the switching device tend to separate, the recovery voltage will be much less than its peak value due to smaller phase displacement between the current I_m and the TRV, and thus help to interrupt the switching device with a lesser severity.

For more details see Section 17.7.2(iii). The principle of restrike in capacitive switching is almost the same as in the case of inductive switching. Consider Figure 23.23, where for ease of analysis, an additional inductance, L, is introduced to increase the circuit impedance, which

Table 23.5 Contactor rating for capacitor switching at different transient (switching) currents I_m

Size of contactor	*Continuous rating of contactors Amps (r.m.s.)*	*Maximum size of three-phase capacitors in kVAr at different switching currents I_m*					
		Capacitor switching current I_m					
		3000 A	*5000 A*	*10 000 A*	*14 000 A*	*18 000 A*	*22 000 A*
2	45	25	16	8	6	4	4
3	90	53	53	31	23	18	15
4	135	80	80	80	61	49	41
5	270	160	160	160	160	160	149
6	540	320	320	320	320	320	320
7	810	480	480	480	480	480	480
8	1215	720	720	720	720	720	720
9	2250	1325	1325	1325	1325	1325	1325

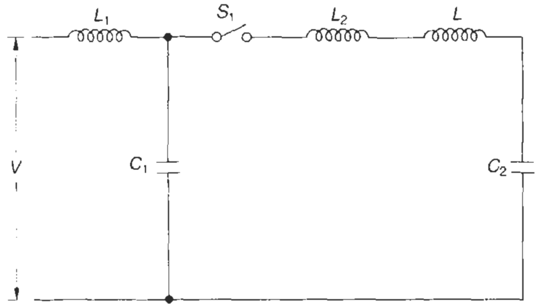

Figure 23.23 Inductance L introduced into the switching circuit

will also dampen the resonant frequency of the switching circuit. The improved I'_m of equation (23.13) can now be expressed as:

$$I'_m = V_p \sqrt{\frac{C_1 \cdot C_2}{(L_2 + L)(C_1 + C_2)}} \tag{23.15}$$

where L_2 and C_1 can further be substituted by L_{2eq} and C_{1eq} respectively.

Example 23.4

Consider the LT system of Example 23.8, where we have considered six banks of 60 kVAr each.

Assume that three units of 20 kVAr each are used to make each bank of 60 kVAr, and let there be six such banks. Data available:

System – 415 V, 3-ϕ, 50 Hz

Each unit of 20 kVAr has

$\left.\begin{array}{l} C = 120\ \mu f \\ L = 1.2\ \mu H \end{array}\right\}$ Typical, may be obtained from the capacitor manufacturer

Consider each capacitor unit of 20 kVAr to be connected in delta, as shown in Figure 23.24(a).

Step 1

There will be three such parallel circuits to make it 60 kVAr. To calculate equivalent capacitance and reactance in delta, we may convert it into an equivalent star as shown in Figure 23.24(b) by maintaining the same line parameters as in Figure 23.24(a). If the impedance of each phase in delta is Z, then to maintain the same steady-state line current, 'I_s', in star also let the equivalent impedance of each phase in star be Z. Then,

$$I_s\,(\text{delta}) = \frac{415}{Z}\sqrt{3}$$

and $$I_s(\text{star}) = \frac{415}{\sqrt{3} \cdot Z'}$$

or $$\frac{415\sqrt{3}}{Z} = \frac{415}{\sqrt{3} \cdot Z'}$$

or $$Z' = \frac{1}{3} \cdot Z$$

Since $$X_L = 2\pi \cdot f \cdot L \quad \therefore \quad X'_L = \frac{1}{3} \times 2\pi \cdot f \cdot L$$

$\therefore$ equivalent L' will be $= \frac{1}{3} L$

and $$X_C = \frac{1}{2\pi \cdot f \cdot C}$$

$$\therefore \quad X'_c = \frac{1}{3} \times \frac{1}{2\pi \cdot f \cdot C} = \frac{1}{2\pi \cdot F \cdot C'}$$

$\therefore$ equivalent $C' = 3\ C$

i.e. inductance of each phase in star $L' = \frac{1.2}{3}\ \mu$H

$= 0.4\ \mu$H

and capacitance of each phase in star $C' = 3 \times 120\ \mu$F. For 60 kVAr bank, the equivalent circuit can be drawn as shown in Figure 23.25.

$$\therefore \quad L' = \frac{1}{\frac{1}{0.4} + \frac{1}{0.4} + \frac{1}{0.4}} = \frac{0.4}{3}\ \mu\text{H}$$

and $$C' = 3 \times 120 + 3 \times 120 + 3 \times 120$$
$$= 3 \times 3 \times 120\ \mu\text{F}$$

The equivalent values in delta would be

$$L = \frac{1}{\frac{1}{1.2} + \frac{1}{1.2} + \frac{1}{1.2}} = \frac{1.2}{3} \text{ or } 0.4\ \mu\text{H}$$

and $C = 120 + 120 + 120 = 360\ \mu$F

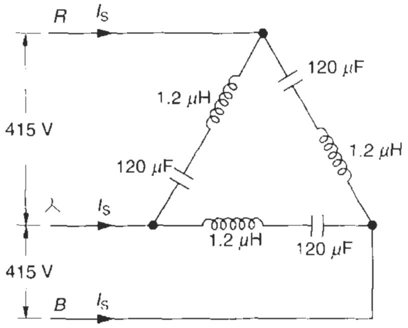

Figure 23.24(a) Equivalent Δ circuit for a 20 kVAr capacitor unit

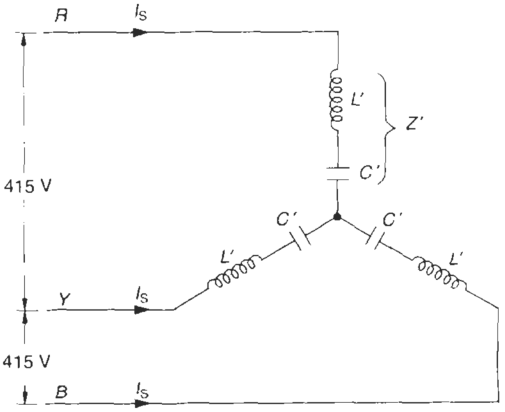

Figure 23.24(b) ⅄ circuit, equivalent to Δ circuit of Figure 23.24(a)

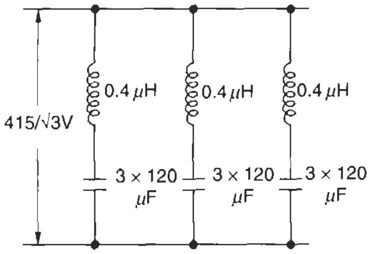

Figure 23.25 Equivalent circuit for a 60 kVAr bank in star made of 3 × 20 kVAr units

Capacitor normal current for each 60 kVAr bank

$$I_c = \frac{60 \times 1000}{\sqrt{3} \times 415} \simeq 83.5 \text{ A}$$

Switch and HRC fuse and contactor rating, as in Section 25.6,

$$= 1.5 \times 83.5$$

or 125.25 A

Thus, for a single capacitor switching of a 60 kVAr bank, a rating of 125 A will be required for the switch, fuse and the contactor etc.

Step 2: Effect of parallel switching

Consider the case when all five units are already energized and the sixth is switched. The equivalent circuit can now be represented as shown in Figure 23.26.

∴ L_{eq} for five switched capacitor banks

$$= \frac{1}{\frac{1}{0.4/3} + \frac{1}{0.4/3} + \frac{1}{0.4/3} + \frac{1}{0.4/3} + \frac{1}{0.4/3}}$$

$$= \frac{0.4}{3 \times 5} \text{ μH}$$

and $L_{2\,eq}$ for the total circuit

$$= \frac{0.4}{3 \times 5} + \frac{0.4}{3} \text{ μH}$$

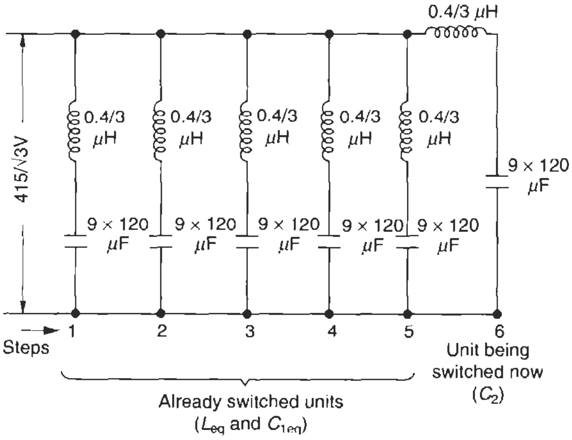

Figure 23.26 Equivalent switching circuit for six capacitor units of 60 kVAr each

$$= \frac{5 \times 0.4 + 0.4}{3 \times 5} \text{ μH}$$

or

$$\frac{0.4 \times 6}{3 \times 5} \times 10^{-6} \text{ H}$$

and $C_{1eq} = 9 \times 120 + 9 \times 120 + 9 \times 120 + 9 \times 120 + 9 \times 120$

$$= 5 \times 9 \times 120 \text{ μF}$$

or

$$5 \times 9 \times 120 \times 10^{-6} \text{ F}$$

$$\therefore \quad I_m = \sqrt{2} \times \frac{415}{\sqrt{3}} \sqrt{\frac{C_{1eq} \times C_2}{L_{2eq}(C_{1eq} + C_2)}}$$

$$= \frac{\sqrt{2}}{\sqrt{3}} \times 415 \sqrt{\frac{5 \times 9 \times 120 \times 10^{-6} \times 9 \times 120 \times 10^{-6}}{\frac{0.4 \times 6}{3 \times 5} \times 10^{-6} (5 \times 9 \times 120 \times 10^{-6} + 9 \times 120 \times 10^{-6})}}$$

$$= 415 \sqrt{\frac{2}{3} \times \frac{5 \times 9 \times 120 \times 9 \times 120}{\frac{0.4 \times 6}{3 \times 5} \times 6 \times 9 \times 120}}$$

$$= 415 \times \sqrt{3750}$$

or 25 414.6 Amps

If switching is effected when the incoming capacitor is already charged, then the inrush current, I_m, will be nearly twice this, i.e.

$$= 25\,414.6 \times 2$$

$$= 50.80 \text{ kA}$$

However, in no case will the switching current exceed the short-circuit kA of the switching circuit.

Inference

This current is excessive for a normal switching device to make frequently, even for one half of a cycle each time. However, on an LT circuit, it would be much below this due to the circuit's own resistance and inductance, which have been ignored in the above analysis. Nevertheless, it would be advisable to limit such a switching surge to a reasonable value to protect the system from damage during repeated switchings as well as the switching devices (selected at 150% of the capacitor's normal current).

Step 3: Limiting the inrush current

Consider an inductance L μH introduced into each capacitor circuit as shown in Figure 23.27(a) or (b) to limit the switching current within the making capacity of the switching device. Then

$$L'_{eq} = \frac{\left(\frac{0.4}{3} + L\right)}{5} \times 10^{-6} \text{ H}$$

$$L'_{2eq} = \frac{\left(\frac{0.4}{3} + L\right) \times 6}{5} \times 10^{-6} \text{ H}$$

and $C'_{1eq} = 5 \times 9 \times 120 \times 10^{-6}$ F

The equivalent switching circuit is shown in Figure 23.27(c):

∴ Improved

$$I'_m = \frac{\sqrt{2}}{\sqrt{3}} \times 415 \sqrt{\frac{5 \times 9 \times 120 \times 10^{-6} \times 9 \times 120 \times 10^{-6}}{\frac{\left(\frac{0.4}{3} + L\right) \times 6}{5} \times 10^{-6} \times 6 \times 9 \times 120 \times 10^{-6}}}$$

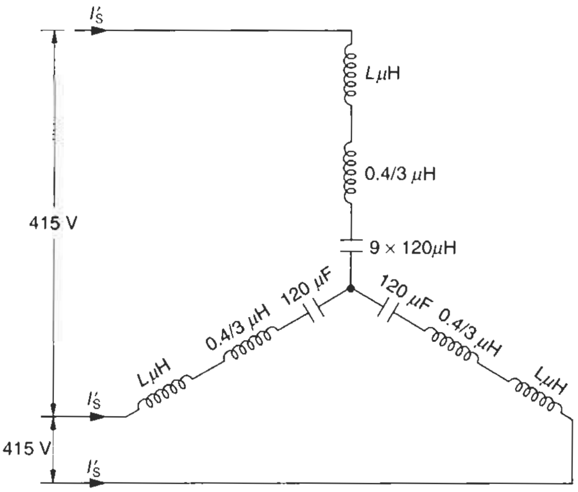

(a) Equivalent ⅄

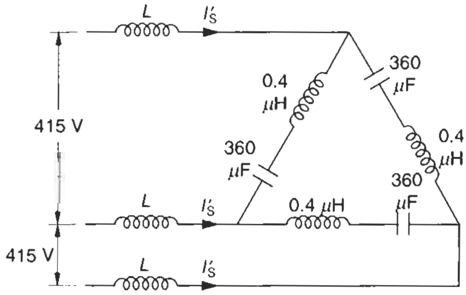

(b) Normal connection Δ

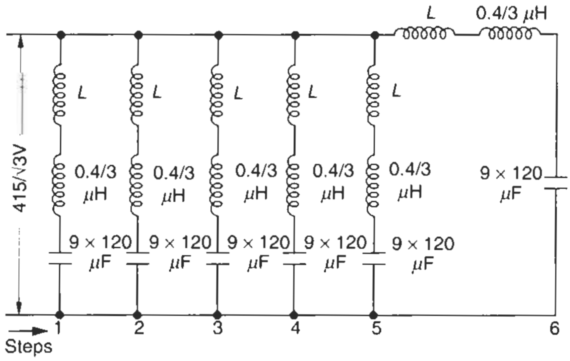

(c) Equivalent switching circuit

Figure 23.27 Equivalent switching circuits

$$\text{or} \left(\frac{0.4}{3} + L\right) = 415^2 \times \frac{2 \times 5 \times 9 \times 120 \times 5}{3 \times 6 \times 6 \times I_m'^2}$$

$$\text{or } L = \frac{415^2 \times 2 \times 5 \times 9 \times 120 \times 5}{3 \times 6 \times 6 \times I_m'^2} - \frac{0.4}{3} \ \mu\text{H}$$

In this case we have considered the switching device to be rated for 125 A for each bank. In an LT system the switching devices such as the switch or the contactor will generally have a making capacity of nearly eight times (peak value $\sqrt{2} \times 8$) its normal rating. (See the note below.) These data are provided by the component manufacturers. Let us therefore assume that I'_m is to be restricted up to $\sqrt{2} \times 125 \times 8$, i.e. $\sqrt{2} \times 1000$ A (the actual value may be more than this, which may be obtained from the manufacturers' catalogues). Therefore, in the above case,

$$L = \frac{415^2 \times 2 \times 5 \times 9 \times 120 \times 5}{3 \times 6 \times 6 \times 2 \times 1000^2} - \frac{0.4}{3} \ \mu\text{H}$$

$$= 43.06 - \frac{0.4}{3} \ \mu\text{H}$$

or $\quad 42.93 \ \mu\text{H}$

If we are able to provide an inductance of this value with each capacitor bank of 60 kVAr the problem of excessive inrush transient current can be overcome and the component ratings as chosen above will be sufficient to switch a parallel circuit.

Step 4: Reactive power of the series inductance

However small, the reactive kVAr of series inductance may be, it would offset as much of the capacitive kVAr. It would be worth while therefore to keep this aspect in mind to ensure that the capacitive kVAr chosen to improve the p.f. of the system to a certain level is not over-adjusted. Otherwise a higher capacitive kVAr would become necessary to achieve the same level of p.f. as was envisaged initially. In the above case,

$$\text{Inductive kVAr} = 3 \times \frac{I_L^2 \cdot X_L}{1000} \ [X_L = \text{reactance in } \Omega\text{/phase}]$$

where $\quad I_L$ = the capacitive current I_c

$= 83.5$A

and $\quad X_L = 2\pi \times 50 \times 42.93 \times 10^{-6} \ \Omega$/phase

$= 0.0135 \ \Omega$

$$\therefore \ \text{Inductive kVAr} = 3 \times \frac{(83.5)^2 \times 0.0135}{1000}$$

$$\simeq 0.28$$

which is even less than 0.5% of the capacitor kVAr per bank and may be ignored.

Note

1 For large LT or HT banks compensating large installations, transmission or distribution networks, the value of series reactance may become large. In which case, the significance of the above phenomenon will appear to be more meaningful. It is, however, seen that in view of the line impedances (which have been ignored in the above estimate) the actual reactance may not normally be required by more than 0.5% to 1% of the total installed kVAr. Using a series reactance equal to 0.2% of the kVAr rating to control the inrush currents is quite prevalent.
2 In HT systems, where a series reactor is already being used, to suppress the system harmonics this would also serve to limit the switching inrush currents and no separate reactor would be necessary.
3 Since a series reactor is of a relatively small value, it may not be able to withstand the system fault conditions. In that case, it is advisable to connect it on the neutral side of the star-connected bank rather than on the line side.

Conversion from delta to star

Whenever an electrical network has different configurations, such as star and delta, it must first be converted to an equivalent star or delta before conducting any analysis. As derived above, the following rules of thumb may be applied:

$$\text{Reactances in star} = \frac{1}{3} \times \text{reactances in delta}$$

i.e. $$L' = \frac{1}{3} L$$

and capacitance in star = 3 × capacitance in delta, i.e. $C' = 3C$

where L = inductance in Δ per phase
L' = inductance in Y per phase
C = capacitance in Δ per phase
C' = capacitance in Y per phase

23.11.1 Transient-free switching

With the use of static switchings through IGBTs or thyristors (SCRs), as discussed in Sections 6.9 and 24.10 both switching overvoltages and inrush currents can be completely eliminated. Switchings are now possible at the instant the applied voltage wave passes through its natural zero. Since such a switching scheme is free from any overvoltage or inrush currents, the number of switching operations is no problem. Also refer to Section 6.16.1 on soft switchings.

Although costlier, when a smoother and faster p.f. correction is desirable, without causing an overvoltage or inflow current, static switchings should be chosen. They have most application in large automatic reactive power controls, as discussed in Section 24.10.

23.11.2 Designing an inductor to limit the inrush currents

A simple coil (even a straight length of cable will serve the same purpose, unless it is too long) as shown in Figure 23.28, will provide a self-inductance when a sinusoidal current is passed through it. We will make use of such a coil to control the excessive currents. The induced inductance in such a coil can be expressed by

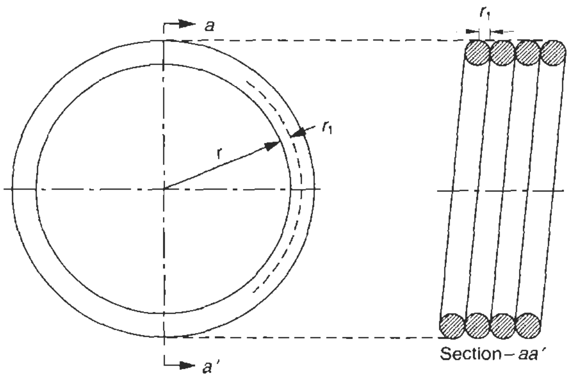

Figure 23.28 A circular coiled coil

$$L = \frac{4 \cdot N^2}{10^9} \cdot r\left(\log_e \frac{8 \cdot r}{0.7788 \cdot r_1} - 2\right) \text{henry} \qquad (23.16)$$

where
L = self-induced inductance of the coil in henry
N = number of turns of the coil
r = mean radius of the conductor in cm and
r_1 = radius of the cross-section of the cable in cm.

Example 23.5 (see Example 23.4)

For obtaining a self-inductance of 42.93 μH consider a coil of 15 cm mean diameter (r = 7.5 cm) made of the same cable that is connecting each capacitor bank through the switching device.

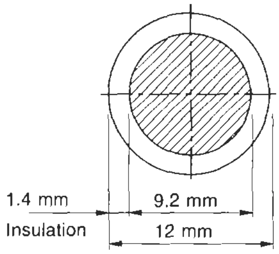

(a) Select a cable of 50 mm² of copper, rated for almost 125 A at 45°C ambient. This cable can also withstand a short-time current of $\sqrt{2} \times 1000$ A for a few seconds. See also Section 28.4.1, the graph of Figure 28.5, and Section A16.7,

where $$\frac{\sqrt{2} \times 1}{50} \cdot \sqrt{t} = 0.12$$

or t = 18 seconds

using a PVC insulated flexible copper cable, having a nominal outer diameter of 12 mm and an insulation thickness of 1.4 mm (typical).

$$\text{Diameter of conductor} = 12 - 2 \times 1.4$$
$$= 9.2 \text{ mm}$$

and $$r_1 = \frac{9.2}{2} = 4.6 \text{ mm} = 0.46 \text{ cm}$$

$$\therefore \quad 42.93 \times 10^{-6} = \frac{4\pi}{10^9} \times N^2 \times 7.5\left(\log_e \frac{8 \times 7.5}{0.7788 \times 0.46} - 2\right)$$

$$= \frac{4\pi}{10^9} \times N^2 \times 7.5(\log_e 167.48 - 2)$$

$$= \frac{4\pi}{10^9} \times N^2 \times 7.5 \quad (5.12 - 2)$$

$$= \frac{4\pi}{10^9} \times N^2 \times 7.5 \times 3.12$$

or $$N = \sqrt{\frac{42.93 \times 10^{-6} \times 10^9}{4\pi \times 7.5 \times 3.12}}$$

$$= 12.08 \text{ say, } 12 \text{ turns}$$

By providing 12 turns of 150 mm mean diameter of the 50 mm² flexible copper cable connecting each 60 kVAr capacitor bank a self-inductance of roughly 42.93 × 10^{-6}H can be introduced into each switching circuit, which will limit the switching inrush current to almost the permissible value of the making current (I_m) of the switching device.

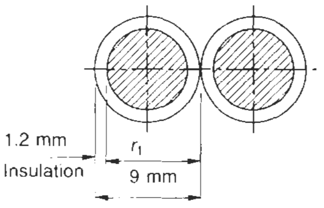

(b) If we use two 25 mm^2 cables as shown, then

r_1 = 7.8 mm or 0.78 cm

and the number of turns that will be necessary:

$$42.93 \times 10^{-6} = \frac{4\pi}{10^9} \times N^2 \times 7.5\left(\log_e \frac{8 \times 7.5}{0.7788 \times 0.78} - 2\right)$$

$$= \frac{4\pi}{10^9} \times N^2 \times 7.5(\log_e 98.77 - 2)$$

$$= \frac{4\pi}{10^9} \times N^2 \times 7.5 \times 2.593$$

or $N = 13.26$

Say, 13 turns

Switching frequency
As calculated above:

$$L_{2\,\mathrm{eq}} = \frac{0.4 \times 6}{3 \times 5} \times 10^{-6}\,\mathrm{H}$$

$$C_{1\,\mathrm{eq}} = 5 \times 9 \times 120 \times 10^{-6}\,\mathrm{F}$$

and $C_X = C_2 = 9 \times 120 \times 10^{-6}\mathrm{F}$

$$\therefore \quad f_s = \frac{1}{2\pi}\sqrt{\frac{(C_{1\mathrm{eq}} + C_X)}{(L_{2\mathrm{eq}} \cdot C_{1\mathrm{eq}} \cdot C_X)}}$$

$$= \frac{1}{2\pi}\sqrt{\frac{(5 \times 9 \times 120 \times 10^{-6}) + (9 \times 120 \times 10^{-6})}{\left(\frac{0.4 \times 6}{3 \times 5} \times 10^{-6}\right)(5 \times 9 \times 120 \times 10^{-6})}}$$

$$= \frac{10^3}{2\pi}\sqrt{\frac{6 \times 3 \times 5 \times 10^6}{0.4 \times 6 \times 5 \times 9 \times 120}}$$

$$= 13.26\ \mathrm{kHz}$$

This will be the surge frequency of the switching circuit when the sixth capacitor is switched on a circuit that has five capacitor units already switched. The improved value of this switching frequency, f_s', after the introduction of inductance 42.93 μH in each capacitor circuit will become.

$$L_{2\mathrm{eq}'} \simeq \frac{\left(\frac{0.4}{3} + L\right) \times 6}{5} \times 10^{-6}\,\mathrm{H}$$

$$= \left(\frac{(0.4 + 3L) \times 6}{3 \times 5}\right) \times 10^{-6}\,\mathrm{H}$$

$$C_{1\mathrm{eq}'} = C_{1\,\mathrm{eq}} = 5 \times 9 \times 120 \times 10^{-6}\,\mathrm{F}$$

$$C_x = C_2 = 9 \times 120 \times 10^{-6}\,\mathrm{F}$$

Therefore the only change in the previous calculation is for $L_{2\mathrm{eq}}$ which is now substituted by (0.4 + 3L), i.e. (0.4 + 3 × 42.93) or 129.19 for 0.4 in the numerator,

$$\therefore\ f_s' = 13.26\sqrt{\frac{0.4}{129.19}}\ \mathrm{kHz}$$

$$= 13.26 \times 0.0556 \times 10^3\ \mathrm{Hz}$$

$$= 738\ \mathrm{Hz}$$

which is substantially dampened with the use of additional inductance, and is only slightly more than the switching frequency on single capacitor switching as worked out in Example 23.3.

23.12 Capacitor panel design parameters

Since this device is also associated with the same power system as a switchgear assembly, it should generally meet the same specifications (Section 13.4) except for small variations in operating conditions and test requirements. Capacitors generate excessive heat when in service. Installations employing large capacitor banks must therefore have a capacitor mounting structure suitable to dissipate heat freely and permit circulation of fresh air during normal operation. To achieve this, open-type enclosures are usually preferred when it is possible to house the panel in a separate room or mount the units on a structure in an open switchyard. It may also be provided with an expanded metal enclosure. Forced cooling within the enclosure or the room where such banks are installed is common practice to dissipate the excessive heat. For more details refer to the following publications:

IEC 60831-1 and 60931-1 for LT, and IEC 60871-1 and IEC 60143-1 for HT systems

23.12.1 Selecting the voltage rating of the capacitor units

When selecting the voltage of the capacitor units care must be taken that during operation the voltage across the capacitor units does not fluctuate beyond ±10%. If this happens the voltage rating of the capacitor units must be chosen so that the variation across the units under unfavourable operating conditions does not exceed ±10%.

Example 23.6
If 3000 kVAr capacitor banks are required for a system of 33 kV + 7.5%, –5% and the capacitors are rated for 34/$\sqrt{3}$ kV then the output of the capacitors at nominal voltage will reduce to

$$\left(\frac{33}{34}\right)^2 \times 3000 = 2826\ \mathrm{kVAr}$$

which will result in an undercompensation by 174 kVAr or 5.8%. If the system voltage falls to, say, 31.5 kV during peak load periods the rating of the capacitor banks will fall further and may render the system unstable,

Effective kVAr at 31.5 kV

$$= \left(\frac{31.5}{34}\right)^2 \times 3000$$

$$= 2575\ \mathrm{kVAr}$$

which will result in an undercompensation by 425 kVAr, or 14.2%. It is therefore advisable to select the voltage rating of the capacitor units at almost the average voltage of the system, which in the above case, will be

$$= \frac{33 \times 1.075 + 33 \times 0.95}{2} = 33.4 \text{ kV}$$

The capacitor banks may be designed for $33.4/\sqrt{3}$ kV.

See also Example 23.1 to account for the voltage rise due to series reactor in case series reactors are used.

23.12.2 Determining the kVAr rating

Consider Figure 23.29(a), where, the p.f. of a power circuit is to be improved from cos ϕ_1, to cos ϕ_2. If kVAr_1 is the reactive component of power at p.f. cos ϕ_1, which is to be improved to kVAr_2, at p.f. cos ϕ_2, through the reactive power compensation, then the reactive component of power compensated or kVAr rating of the required capacitor banks

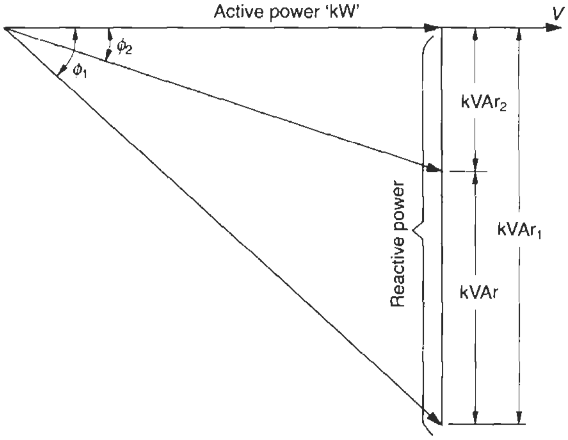

Figure 23.29(a) Determining the kVAr rating of a shunt capacitor

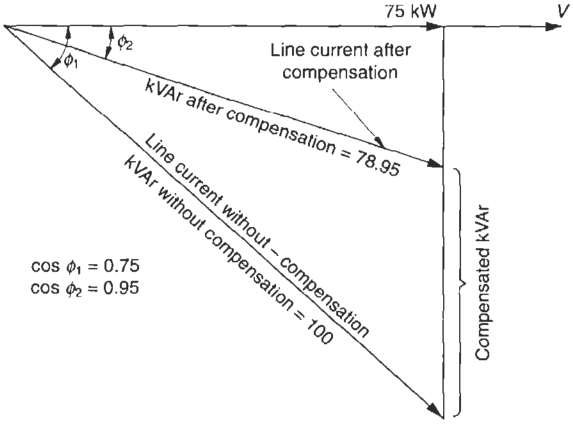

Figure 23.29(b) Reduction in line current after power factor compensation

$$\text{kVAr} = \text{kVAr}_1 - \text{kVAr}_2$$

and from Figure 23.29(a)

$$\frac{\text{kVAr}_1}{\text{kW}} = \tan \phi_1$$

and $$\frac{\text{kVAr}_2}{\text{kW}} = \tan \phi_2$$

$$\therefore \text{kVAr}_1 - \text{kVAr}_2 = \text{kW}(\tan \phi_1 - \tan \phi_2) = \text{kW} \cdot \text{K} \quad (23.17)$$

where K is a multiplying factor. For quick application of this equation and to simplify calculations, the factor K has been worked out for different values of cos ϕ_1 and cos ϕ_2 and reproduced in the form of Table 23.6.

Example 23.7

For a load of 75 kW, having a p.f. of 0.75, the capacitor rating to improve it to 0.95 can be calculated as follows:

$\cos \phi_1 = 0.75$

$\therefore \quad \phi_1 = 41.41°$

and $\tan \phi_1 = 0.882$

$\cos \phi_2 = 0.95$

$\therefore \quad \phi_2 = 18.19°$

and $\tan \phi_2 = 0.329$

$\therefore \quad \tan \phi_1 - \tan \phi_2 = 0.882 - 0.329$

or $K = 0.553$

(the same value can easily be determined from Table 23.6) and the required rating of capacitors,

$\text{kVAr} = 75 \times 0.553$

$= 41.5 \text{ kVAr}$

Say, 40 kVAr

See also Figure 23.29 (b).

23.13 Capacitor rating for an induction motor

The selection of capacitor rating, for an induction motor, running at different loads at different times, due either to change in load or to fluctuation in supply voltage, is difficult and should be done with care because the reactive loading of the motor also fluctuates accordingly. A capacitor with a higher value of kVAr than the motor kVAr, under certain load conditions, may develop dangerous voltages due to self-excitation. At unity power factor, the residual voltage of a capacitor is equal to the system voltage. It rises at leading power factors (Figure 23.30). These voltages will appear across the capacitor banks when they are switched off and become a potential source of danger to the motor and the operator. Such a situation may arise when the capacitor unit is connected across the motor terminals and is switched with it. This may happen during an open transient condition while changing over from star to delta, or from one step to another, as in an A/T switching, or during a tripping of the motor or even while switching off a running motor. In all such cases the capacitor will be fully charged and

Table 23.6 Chart for selection of capacitor rating, to improve the existing p.f. to a higher level

Present power factor	*Factor K for required power factor*												
	0.80	*0.85*	*0.90*	*0.91*	*0.92*	*0.93*	*0.94*	*0.95*	*0.96*	*0.97*	*0.98*	*0.99*	*Unity*
0.40	1.537	1.668	1.805	1.832	1.861	1.895	1.924	1.959	1.998	2.037	2.085	2.146	2.288
0.41	1.474	1.605	1.742	1.769	1.798	1.831	1.860	1.896	1.935	1.973	2.021	2.082	2.225
0.42	1.413	1.544	1.681	1.709	1.738	1.771	1.800	1.836	1.874	1.913	1.961	2.022	2.164
0.43	1.356	1.487	1.624	1.651	1.680	1.713	1.742	1.778	1.816	1.855	1.903	1.964	2.107
0.44	1.290	1.421	1.558	1.585	1.614	1.647	1.677	1.712	1.751	1.790	1.837	1.899	2.041
0.45	1.230	1.360	1.501	1.532	1.561	1.592	1.626	1.659	1.695	1.737	1.784	1.846	1.988
0.46	1.179	1.309	1.446	1.473	1.502	1.533	1.567	1.600	1.636	1.677	1.725	1.786	1.929
0.47	1.130	1.260	1.397	1.425	1.454	1.485	1.519	1.552	1.588	1.629	1.677	1.758	1.881
0.48	1.076	1.206	1.343	1.370	1.400	1.430	1.464	1.497	1.534	1.575	1.623	1.684	1.826
0.49	1.030	1.160	1.297	1.326	1.355	1.386	1.420	1.453	1.489	1.530	1.578	1.639	1.782
0.50	0.982	1.112	1.248	1.276	1.303	1.337	1.369	1.403	1.441	1.481	1.529	1.590	1.732
0.51	0.936	1.066	1.202	1.230	1.257	1.291	1.323	1.357	1.395	1.435	1.483	1.544	1.686
0.52	0.894	1.024	1.160	1.188	1.215	1.249	1.281	1.315	1.353	1.393	1.441	1.502	1.644
0.53	0.850	0.980	1.116	1.144	1.171	1.205	1.237	1.271	1.309	1.349	1.397	1.458	1.600
0.54	0.809	0.939	1.075	1.103	1.130	1.164	1.196	1.230	1.268	1.308	1.356	1.417	1.559
0.55	0.769	0.899	1.035	1.063	1.090	1.124	1.156	1.190	1.228	1.268	1.316	1.377	1.519
0.56	0.730	0.860	0.996	1.024	1.051	1.085	1.117	1.151	1.189	1.229	1.277	1.338	1.480
0.57	0.692	0.822	0.958	0.986	1.013	1.047	1.079	1.113	1.151	1.191	1.239	1.300	1.442
0.58	0.655	0.785	0.921	0.949	0.976	1.010	1.042	1.076	1.114	1.154	1.202	1.263	1.405
0.59	0.618	0.748	0.884	0.912	0.939	0.973	1.005	1.039	1.077	1.117	1.165	1.226	1.368
0.60	0.584	0.714	0.849	0.878	0.905	0.939	0.971	1.005	1.043	1.083	1.131	1.192	1.334
0.61	0.549	0.679	0.815	0.843	0.870	0.904	0.936	0.970	1.008	1.048	1.096	1.157	1.299
0.62	0.515	0.645	0.781	0.809	0.836	0.870	0.902	0.936	0.974	1.014	1.062	1.123	1.265
0.63	0.483	0.613	0.749	0.777	0.804	0.838	0.870	0.904	0.942	0.982	1.030	1.091	1.233
0.64	0.450	0.580	0.716	0.744	0.771	0.805	0.837	0.871	0.909	0.949	0.997	1.058	1.200
0.65	0.419	0.549	0.685	0.713	0.740	0.774	0.806	**0.840**	0.878	0.918	0.966	1.027	1.169
0.66	0.388	0.518	0.654	0.682	0.709	0.743	0.775	0.809	0.847	0.887	0.935	0.996	1.138
0.67	0.358	0.488	0.624	0.652	0.679	0.713	0.745	0.779	0.817	0.857	0.905	0.966	1.108
0.68	0.329	0.459	0.595	0.623	0.650	0.684	0.716	0.750	0.788	0.828	0.876	0.937	1.079
0.69	0.299	0.429	0.565	0.593	0.620	0.654	0.686	0.720	0.758	0.798	0.840	0.907	1.049
0.70	0.270	0.400	0.536	0.564	0.591	0.625	0.657	0.691	0.729	0.769	0.811	0.878	1.020
0.71	0.242	0.372	0.508	0.536	0.563	0.597	0.629	0.663	0.701	0.741	0.783	0.850	0.992
0.72	0.213	0.343	0.479	0.507	0.534	0.568	0.600	0.634	0.672	0.712	0.754	0.821	0.963
0.73	0.186	0.316	0.452	0.480	0.507	0.541	0.573	0.607	0.645	0.685	0.727	0.794	0.936
0.74	0.159	0.289	0.425	0.453	0.480	0.514	0.546	0.580	0.618	0.658	0.700	0.767	0.909
0.75	0.132	0.262	0.398	0.426	0.453	0.487	0.519	**0.553**	0.591	0.631	0.673	0.740	0.882
0.76	0.105	0.235	0.371	0.399	0.426	0.460	0.492	0.526	0.564	0.604	0.652	0.713	0.855
0.77	0.079	0.209	0.345	0.373	0.400	0.434	0.466	0.500	0.538	0.578	0.620	0.687	0.829
0.78	0.053	0.183	0.319	0.347	0.374	0.408	0.440	0.474	0.512	0.552	0.594	0.661	0.803
0.79	0.026	0.156	0.292	0.320	0.347	0.381	0.413	0.447	0.485	0.525	0.567	0.634	0.776
0.80	–	0.130	0.266	0.294	0.321	0.355	0.387	0.421	0.459	0.499	0.541	0.608	0.750
0.81	–	0.104	0.240	0.268	0.295	0.329	0.361	0.395	0.433	0.473	0.515	0.582	0.724
0.82	–	0.078	0.214	0.242	0.269	0.303	0.355	0.369	0.407	0.447	0.489	0.556	0.698
0.83	–	0.052	0.188	0.216	0.243	0.277	0.309	0.343	0.381	0.421	0.463	0.530	0.672
0.84	–	0.026	0.162	0.190	0.217	0.251	0.283	0.317	0.355	0.395	0.437	0.504	0.645
0.85	–	–	0.136	0.164	0.191	0.225	0.257	0.291	0.329	0.369	0.417	0.478	0.620
0.86	–	–	0.109	0.140	0.167	0.198	0.230	0.264	0.301	0.343	0.390	0.450	0.593
0.87	–	–	0.083	0.114	0.141	0.172	0.204	0.238	0.275	0.317	0.364	0.424	0.567
0.88	–	–	0.054	0.085	0.112	0.143	0.175	0.209	0.246	0.288	0.335	0.395	0.538
0.89	–	–	0.028	0.059	0.086	0.117	0.149	0.183	0.230	0.262	0.309	0.369	0.512
0.90	–	–	–	0.031	0.058	0.089	0.121	0.155	0.192	0.234	0.281	0.341	0.484
0.91	–	–	–	–	0.027	0.058	0.090	0.124	0.161	0.203	0.250	0.310	0.453
0.92	–	–	–	–	–	0.031	0.063	0.097	0.134	0.176	0.223	0.283	0.426
0.93	–	–	–	–	–	–	0.032	0.066	0.103	0.145	0.192	0.252	0.395
0.94	–	–	–	–	–	–	–	0.034	0.071	0.113	0.160	0.220	0.363
0.95	–	–	–	–	–	–	–	–	0.037	0.079	0.126	0.186	0.329
0.96	–	–	–	–	–	–	–	–	–	0.042	0.089	0.149	0.292
0.97	–	–	–	–	–	–	–	–	–	–	0.047	0.107	0.250
0.98	–	–	–	–	–	–	–	–	–	–	–	0.060	0.203
0.99	–	–	–	–	–	–	–	–	–	–	–	–	0.143

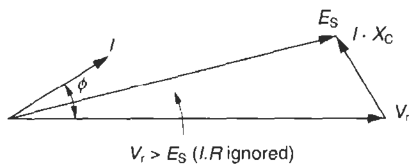

(a) Receiving end voltage rises with leading p.f.'s

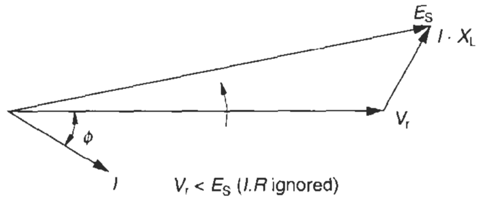

(b) Receiving end voltage diminishes with lagging p.f.'s

Figure 23.30

its excitation voltage, the magnitude of which depends upon the p.f. of the system, will appear across the motor terminals or any other appliances connected on the same circuit. The motor, after disconnection from supply, will receive the self-excitation voltage from the capacitor and while running may act as a generator, giving rise to voltages at the motor terminals considerably higher than the system voltage itself. The solution to this problem is to select a capacitor with its capacitive current slightly less than the magnetizing current, I_m, of the motor, say, 90% of it. See also Figure 1.15.

At voltages lower than rated, the no-load current, I_{nl}, and the magnetizing current, I_m, of the motor is low and rises with the voltage. At loads lower than rated, although the p.f. will diminish sharply as discussed in Section 1.8, the reactive component I_m and the no-load current I_{nl}, i.e. component OA of Figure 1.16, will remain the same.

If these facts are not borne in mind when selecting the capacitor rating, particularly when the p.f. of the motor is assumed to be lower than the rated p.f. at full load, then at certain loads and voltages it is possible that the

Table 23.7 Recommended capacitor ratings for direct switching with induction motors, to improve power factor to 0.95 or better at all loads

Motor H.P.	*Capacitor rating in kVAr at a motor r.p.m.*						*Motor H.P.*	*Capacitor rating in KVAr at a motor r.p.m.*					
	3000 r.p.m.	*1500 r.p.m.*	*1000 r.p.m.*	*750 r.p.m.*	*600 r.p.m.*	*500 r.p.m.*		*3000 r.p.m.*	*1500 r.p.m.*	*1000 r.p.m.*	*750 r.p.m.*	*600 r.p.m.*	*500 r.p.m.*
2.5	1	1	1.5	2	2.5	2.5	105	22	24	27	29	36	41
5	2	2	2.5	3.5	4	4	110	23	25	28	30	38	43
7.5	2.5	3	3.5	4.5	5	5.5	115	24	26	29	31	39	44
10	3	4	4.5	5.5	6	6.5	120	25	27	30	32	40	46
12.5	3.5	4.5	5	6.5	7.5	8	125	26	28	31	33	41	47
15	4	5	6	7.5	8.5	9	130	27	29	32	34	43	49
17.5	4.5	5.5	6.5	8	10	10.5	135	28	30	33	35	44	50
20	5	6	7	9	11	12	140	29	31	34	36	46	52
22.5	5.5	6.5	8	10	12	13	145	30	32	35	37	47	54
25	6	7	9	10.5	13	14.5	150	31	33	36	38	48	55
27.5	6.5	7.5	9.5	11.5	14	16	155	32	34	37	39	49	56
30	7	8	10	12	15	17	160	33	35	38	40	50	57
32.5	7.5	8.5	11	13	16	18	165	34	36	39	41	51	59
35	8	9	11.5	13.5	17	19	170	35	37	40	42	53	60
37.5	8.5	9.5	12	14	18	20	175	36	38	41	43	54	61
40	9	10	13	15	19	21	180	37	39	42	44	55	62
42.5	9.5	11	14	16	20	22	185	38	40	43	45	56	63
45	10	11.5	14.5	16.5	21	23	190	38	40	43	45	58	65
47.5	10.5	12	15	17	22	24	195	39	41	44	46	59	66
50	11	12.5	16	18	23	25	200	40	42	45	47	60	67
55	12	13.5	17	19	24	26	205	41	43	46	48	61	68
60	13	14.5	18	20	26	28	210	42	44	47	49	61	69
65	14	15.5	19	21	27	29	215	42	44	47	49	62	70
70	15	16.5	20	22	28	31	220	43	45	48	50	63	71
75	16	17	21	23	29	32	225	44	46	49	51	64	72
80	17	19	22	24	30	34	230	45	47	50	52	65	73
85	18	20	23	25	31	35	235	46	48	51	53	65	74
90	19	21	24	26	33	37	240	46	48	51	53	66	75
95	20	22	25	27	34	38	245	47	49	52	54	67	75
100	21	23	26	28	35	40	250	48	50	53	55	68	76

capacitor kVAr may exceed the motor reactive component, and cause a leading power factor. A leading p.f. can produce dangerous overvoltages. This phenomenon is also true in an alternator.

If such a situation arises with a motor or an alternator, it is possible that it may cause excessive torques. Keeping these parameters in mind, motor manufacturers have recommended compensation of only 90% of the no-load kVAr of the motor, irrespective of the motor loading. This, for all practical purposes and at all loads, will improve the p.f. of the motor to around 0.9–0.95, which is satisfactory.

Table 23.7, based on the recommendations of motor manufacturers, suggests the likely capacitor ratings for different motor ratings and speeds. For higher ratings, interpolate or calculate the rating as illustrated in Section 23.12.2.

23.14 Location of capacitors

Refer to a typical distribution network shown in Figure 23.31. The capacitor is of maximum use when located as near to the load-point as possible, especially in induction motors, because:

1 The reactive load is confined to the smallest part of the system.
2 The motor starter can be used to switch the capacitor as well as the motor, eliminating the cost of an extra switch and fuse for the capacitor.
3 By employing the same switch for motor and capacitor, the capacitor is automatically controlled. The capacitor is required to be in the circuit only when the motor is in operation. The capacitor panel can be a part of the main power control centre (PCC) or the motor control centre (MCC) or it can also be a separate panel, as shown in Figure 23.32. In group loads such as an industrial or a power-house application, it may be more economical and practical to install capacitors in groups, whose kVAr value can be varied as desired, depending upon the system loading at a time. This can also be done automatically through a preset power factor correction relay (Figure 23.38). The advantages of a group installation can be:
   - Diversity: When a number of motor loads are connected on a common bus, normally not all the motors will be operating at a time. A capacitor bank near the MCC would permit the use of lesser total kVAr than if the capacitors were located separately at each individual load.
   - When many small motors are operating simultaneously it is economical to install larger capacitors in several sections than to have many small capacitors installed at each motor.

Figure 23.33 and 23.34 illustrate the locations discussed so far. Figure 23.33 suggests the locations of the capacitor in respect of the motor whose p.f. is to be improved, e.g.

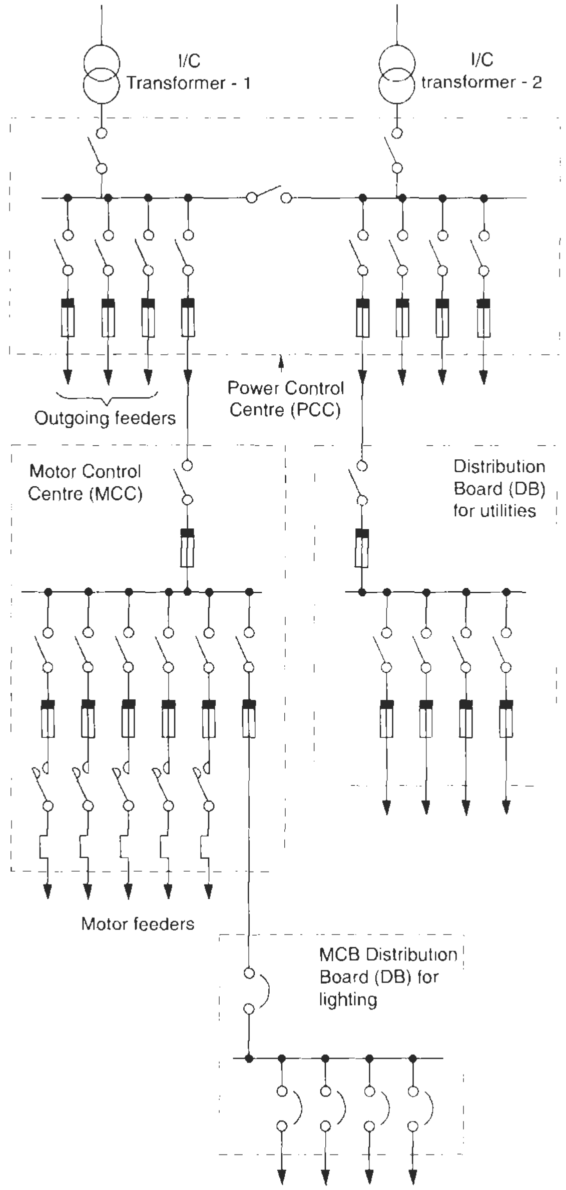

Figure 23.31 Receiving and distribution of power in an industrial unit

in position 1* the capacitor is connected on the motor side after the starter. The same starter will switch both the motor and the capacitor. Since the capacitor will reduce the kVAr demand, the current through the starter

---

*When adopting this location, care must be taken that the capacitors are not subjected to a quick reclosing (Section 25.6.2(4)). In a Y/Δ or A/T switching the capacitors would be subjected to a quick reclosing and may endanger the motor insulation as well as its own. In this case it would be essential to make a suitable modification in its switching circuit to keep the capacitor out of the circuit during the changeover, as suggested in Figure 25.7.

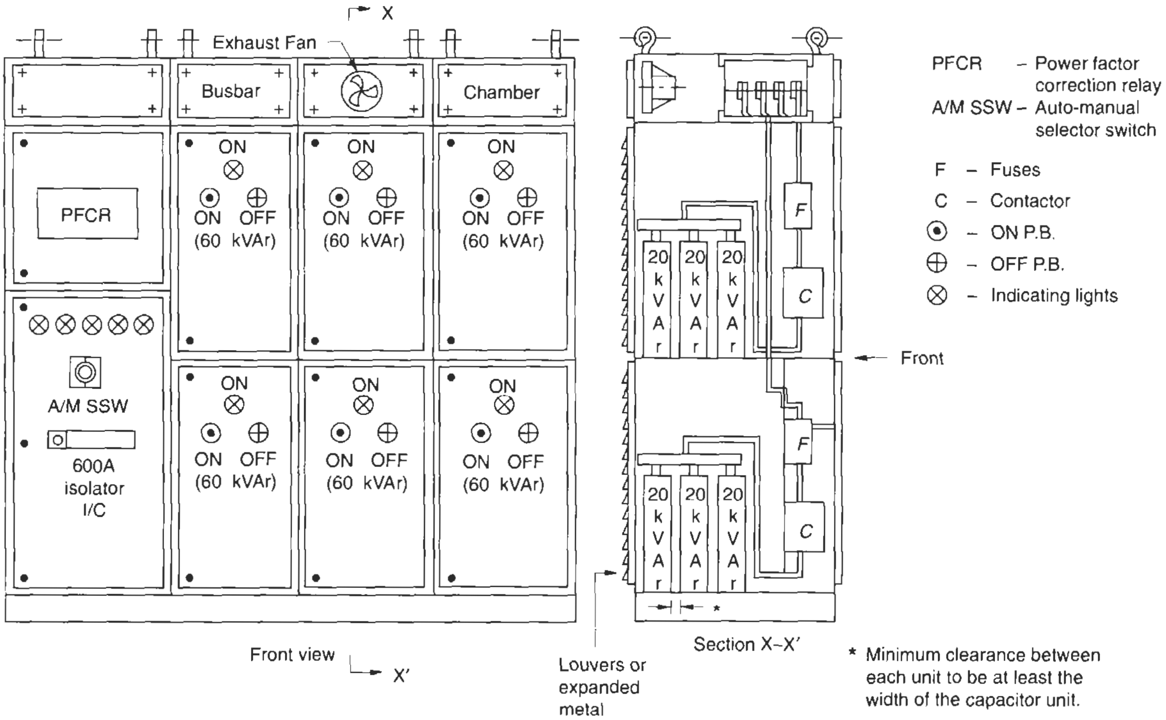

Figure 23.32 General arrangement of capacitor panel

relay will be low and it should be set at a lower value accordingly.

In position 2 the capacitor is connected on the line side, although switched by the same switching device. The relay setting is not affected since only the full motor current will flow through the starter. In position 3 the capacitor is connected to the circuit, through an additional switch fuse unit.

Figure 23.34 suggests possible locations where the capacitor banks can be installed for individual or group controls, depending upon cost and simplicity. Location 1 will be suited for individual loads and is effective when there are not many load points. For group controls, location 3 is ideal and most economical. Compared to location 3, location 2 is not appropriate unless there are feeders on the main bus that would require a power factor improvement in addition to capacitors at location 3. In this case the capacitors at location 2 will be for the feeders on the main bus and not for the downstream distribution feeders. Location 4 controls the power factor from one point. This location is suitable for improving the system

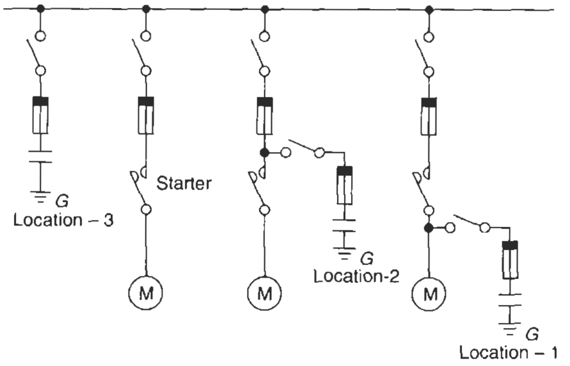

Figure 23.33 Capacitor locations for individual compensation

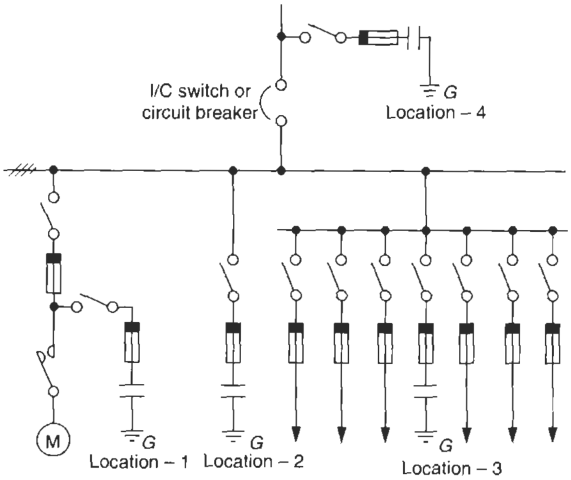

Figure 23.34 Capacitor locations for individual for group loads

power factor, reducing the kVA demand and the strains on the main supply and distribution network. Technically speaking, it has no advantages for in-plant power distribution, nor does it help to reduce the kVA strain on the feeding cables or the loading on the power distribution feeders. But for simplicity and ease of control for the entire plant it is used most often.

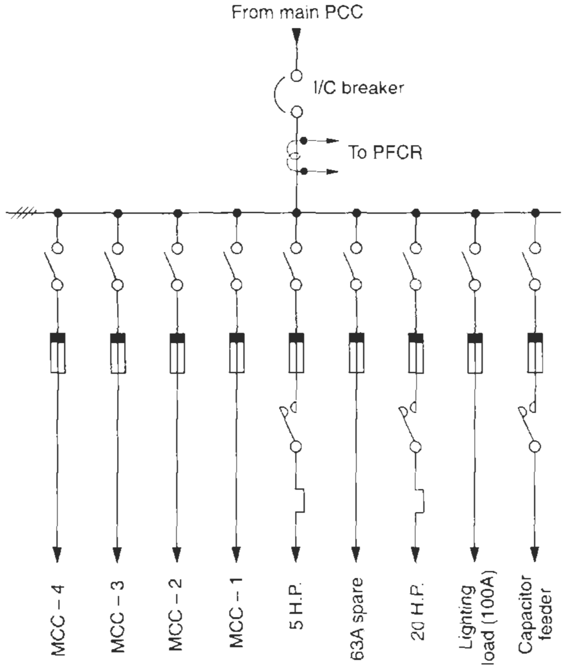

PFCR – Power factor correction relay

Figure 23.35 Single-line diagram for an industrial load

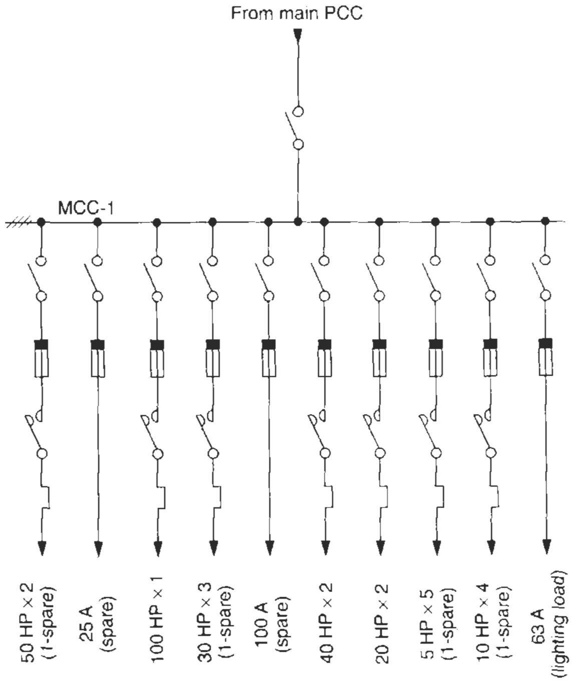

Figure 23.36 Single-line diagram for MCC-1

23.15 Automatic PF correction of a system

As discussed above, for an industrial or power plant application or an installation with a number of inductive load points a group capacitor control is always more effective, simple and economical. Such an installation generally has a frequent variation in its load demand due to some feeders coming on the bus and some falling out at different times. There may be variation in the individual feeder's load demand, such as a tool room, where not all the machines will be working at a time, or a pulp mill and paper mill, where the paper mill has a continuous load, the pulp mill an intermittent one. A water treatment plant or a pump house are similar installations where all or some of the loads would be in operation at a time. For such installations, the total capacitive load demand at a required power factor level is worked out and the total capacitor banks are installed at a convenient point and suitably grouped (banked) for the type of loading and system demand. Each bank is controlled through a power contactor and a common power factor correction relay to automatically monitor and control the power factor of the system to a predetermined level, preset in the relay, by switching a few capacitor banks ON or OFF, depending upon the load demand and the power factor measured by the relay. The relay actuates the required number of capacitor feeders through their contactors.

Automatic correction is always recommended to eliminate manual dependence and to achieve better accuracy. It also eliminates the risk of a leading power factor by a human error that may cause an excessive voltage at the motor and the control gear terminals.

The following example illustrates the method of selecting the capacitors' value, their grouping and their control for a system having a number of load points.

Example 23.8

Consider a system shown in the single-line diagram of Figure 23.35, where total load on MCC-1 as in the single-line diagram of Figure 23.36 is

3 × 10 h.p	=	30 h.p.
4 × 5 h.p.	=	20 h.p.
2 × 20 h.p.	=	40 h.p.
2 × 40 h.p.	=	80 h.p.
2 × 30 h.p.	=	60 h.p.
1 ×100 h.p.	=	100 h.p.
1 × 50 h.p.	=	50 h.p.
Total		380 h.p. + spares and lighting load

Note

1 Lighting loads are not considered for the following reasons:

(i) All incandescent lamps are resistive and do not influence the power factor of the system.
(ii) Mercury vapour lamps and sodium vapour lamps are invariably provided with built-in p.f. improvement capacitors by their manufacturers.
(iii) Fluorescent tubes used for industrial installations and domestic use are also provided with p.f. improvement capacitors.

2 Similarly, 100 A and 25 A spares are also not considered, assuming that the utility of such feeders would be rare and for short durations (such as for maintenance).
3 Spare motor feeders are also not considered for similar reasons.

Total loads for other MCCs, as in the single-line diagram of Figure 23.35:

MCC-2 – 75 h.p. + Spare and lighting load
MCC-3 – 150 h.p. + Spare and lighting load
MCC-4 – 200 h.p. + Spare and lighting load

Then the total inductive load connected on the main PCC–cum–MCC:

MCC-1	–	380 h.p.
MCC-2	–	75 h.p.
MCC-3	–	150 h.p.
MCC-4	–	200 h.p.
5 h.p. × 1	–	5 h.p.
20 h.p. × 1	–	20 h.p
Total	–	830 h.p.

Considering the diversity factor (Table 13.4) for such a plant to be 70%, or as the system may require, which can be determined by the type of industry and the process demand:

∴ Total inductive load on the system at any time

= 830 × 0.7

= 581 h.p.

or 581 × 0.746 i.e. 433.43 kW

Assume the plant p.f. before the power factor correction to be 0.65. (We have provided in Table 23.8 the likely operating power factors for different types of industries, as a rough guide.) If this p.f. is to be improved to say, 0.95, then from Table 23.6,

Factor $K = 0.84$

and total capacitor banks required = 433.43 × 0.84 ≃ 364 kVAr

Thus capacitor banks of 360 kVAr should be adequate for this system and can be arranged in six steps of 60 kVAr each.

For the rating of the incoming feeder,

$$I_C = \frac{360}{\sqrt{3} \times 0.415} \simeq 500 \text{ A}$$

∴ Rating of the incoming switch = 1.5 × 500 = 750 A

The nearest standard rating available = 800 A

For the rating of outgoing fuse and contactors

$$I_C = \frac{60}{\sqrt{3} \times 0.415} \simeq 83.5 \text{ A}$$

∴ Rating of the outgoing feeders = 1.5 × 83.5 = 125 A

Automatic control

Select a six- or eight-step power factor correction relay. In the case of an eight-step relay, the sventh and eighth steps can be left as spares, which may be used later when more capacitor banks are considered necessary. A typical control scheme and the power circuit for such a system is shown in Figure 23.37. A general arrangement is shown in Figure 23.32 for such a capacitor control panel.

23.15.1 Other methods for PF correction

LT installations may be subject to frequent load variations and inductive switchings. It will be more desirable in such cases to provide them with an automatic p.f. correction scheme than manual correction. It may be

Table 23.8 Likely operating power factors for different types of industries

Type of industry	*Likely power factor*	*Type of industry*	*Likely power factor*
Cold storage and fisheries	0.76 to 0.80	Flour mills	0.61
Cinemas	0.78 to 0.80	Gas works	0.87
Metal pressing	0.57 to 0.72	Textile mills	0.86
Confectionery	0.77	Oil mills	0.51 to 0.59
Dyeing and printing (textile)	0.60 to 0.87	Woollen mills	0.70
Plastic moulding	0.57 to 0.73	Potteries	0.61
Film studios	0.65 to 0.74	Cigarette manufacturing	0.80
Newspaper printing	0.58	Cotton press	0.63 to 0.68
Heavy engineering works	0.48 to 0.75	Foundries	0.59
Rubber extrusion & moulding	0.48	Tiles and mosaic	0.61
Pharmaceuticals	0.75 to 0.86	Structural engineering	0.53 to 0.68
Oil and paint manufacturing	0.51 to 0.69	Chemicals	0.72 to 0.87
Silk mills	0.58 to 0.68	Municipal pumping stations	0.65 to 0.75
Biscuit factory	0.60	Refineries and petrochemicals	0.64 to 0.83
Printing press	0.65 to 0.75	Telephone exchange	0.66 to 0.80
Food products	0.63	Rolling mills	0.72 to 0.80
Laundries	0.92	Irrigation pumps	0.50 to 0.70

Note: These figures are only indicative.

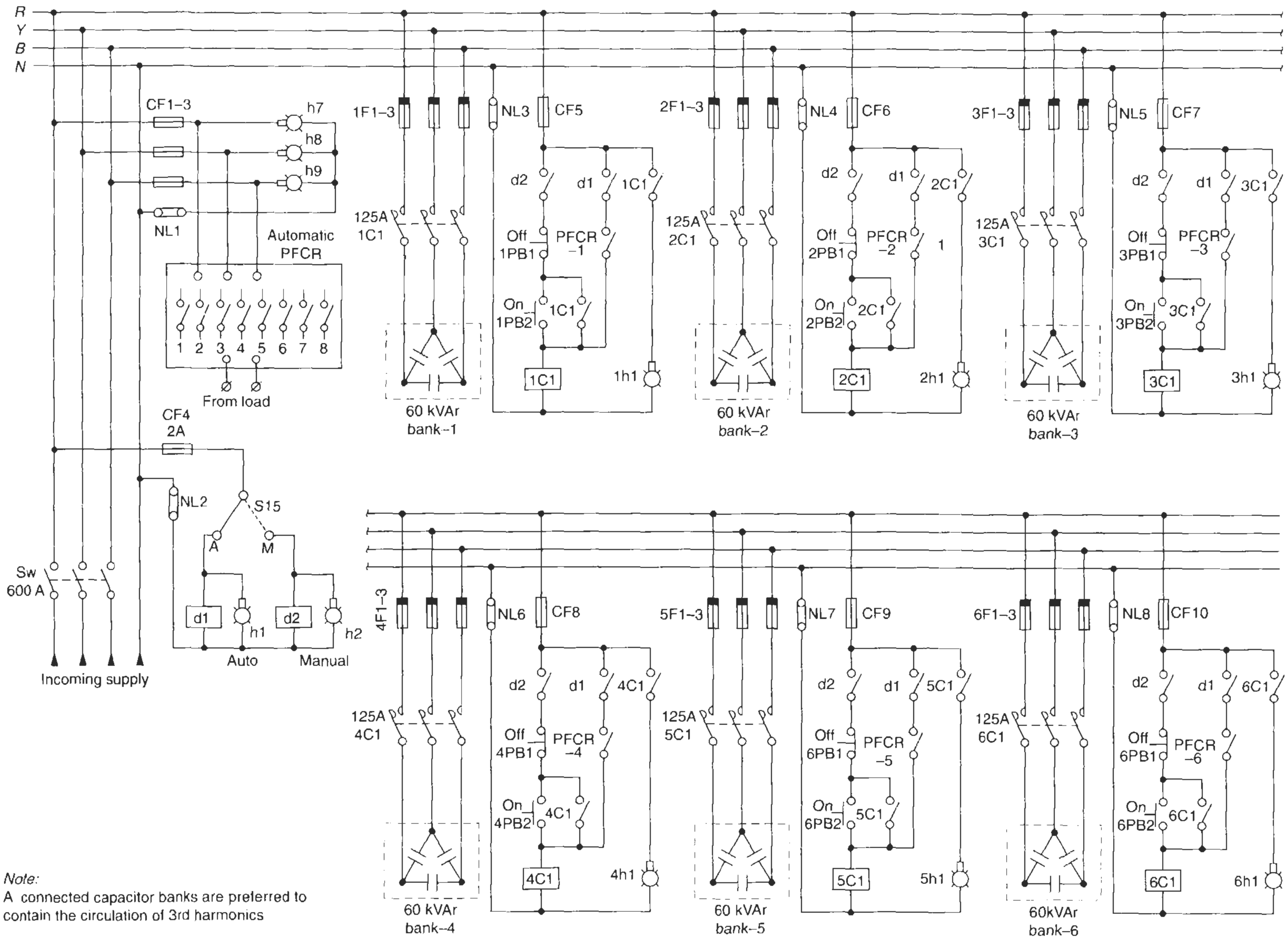

Note:
A connected capacitor banks are preferred to contain the circulation of 3rd harmonics

Figure 23.37 A power schematic drawing for an automatic capacitor control panel impracticable to keep a close monitoring of such system variations and alter the capacitive reactance manually to maintain the desired p.f. level.

The situation in an HT installation will, however, be different. An HT system is mostly a fixed-load one, where a variation in the load may be only occasional and at certain periodic intervals. To provide an automatic switching in such cases will be a costly arrangement due to expensive switchgear equipment. In addition, it will also cause cumulative switching surges as a result of rapid reclosing and interrupting sequences unless a static switching control is adopted as discussed in Section 24.10, which will further add to the cost. To mitigate such constraints, the following may be considered as the more recommended methods for p.f. control of such installations:

1 Identify the likely variations in load and p.f. during a 24-hour period. Maintain a minimum fixed kVAr permanently connected in the system, at the distribution point for the likely constant loads. For the rest, the banks may be selected so that only one or two are sufficient to control the whole system for the desired p.f. level or system regulation. This will also limit operations of the banks to only three or four a day and less than a thousand during a year, as recommended in Section 26.1(2). Control may now be carried out:
   - Manually, as variations in load would almost be specific and periodic and easy to monitor or
   - By making it automatic, which would now be economical with one or two variable banks.
2 In a secondary transmission or a primary distribution network it is common practice to provide the maximum possible size of fixed capacitor banks at the transmission point or on the pole at the distribution point with the feeder transformer. This is done to maintain the p.f. and the regulation of the system up to a certain minimum level. Capacitors mounted out of sight or away from easy reach may sometimes be ignored for maintenance or periodic checks. This must be taken into account while installing the capacitor units. To monitor the health of capacitor units one may install an ammeter or a kVAr meter in each phase and maintain a logbook to monitor the health of capacitor units/banks through the unbalance in the three phases of the capacitor circuit. When warranted, preventive measures such as cleaning the insulators, tightening the terminals, and replacing or adding of a few capacitor units to make up for the lost capacitances and to balance the system can be undertaken.

23.16 Switching sequences

A switching sequence that can be employed for a particular load cycle may be one of the following:

23.16.1 First in last out

This is the simplest type of switching. Capacitors are switched ON in the sequence of 1-2-3 . . . *n* and switched OFF in the reverse sequence i.e. *n* . . . 3-2-1. In this switching the last switched capacitor is made to switch again. This switching is therefore more stressful for the capacitor as well as for the system, due to surge voltages. During a switch ON therefore some time delay must be introduced into the switching circuit for the capacitor charge to decay to a safe level. In this sequence, the capacitors of each step are normally the same. It is a primitive and unscientific switching sequence and therefore not in much use.

23.16.2 True 'first in first out' (FIFO)

Capacitors are switched ON in the sequence of 1-2-3 . . . . *n* but an additional logic is used to switch OFF in the same sequence 1-2-3 . . . *n*, i.e. the oldest OFF capacitor is switched ON first and the oldest ON capacitor is switched OFF first. This apparently is the best switching sequence, giving enough time to an OFF capacitor to discharge before it is switched again. Each stage capacitor rating must be equal to avoid a wide fluctuation in the p.f. correction and hence undesirable subsequent switchings, which may be necessitated when the capacitors are not of equal ratings.

23.16.3 Pseudo (false) 'first in first out'

In a way this is more appropriate than the FIFO, for it can have unequal stage capacitors. Capacitors, however, are arranged in ascending order such as 10, 20, 50 . . . kVAr etc., or large or small capacitors. But, as mentioned above, this may not provide accurate correction in the first instance. Now the relay may have to operate on the theory of probability and resort to a lot of sequencing to arrive at the right correction. Such a sequencing may also lead to hunting and cause voltage fluctuations, because of varying p.f. s and also cause switching currents and voltage surges.

23.16.4 1+2+2 . . .

The first capacitor is half the rating of the remaining ones, which are all equal. The p.f. correction is delayed, due to allowing discharge time. The smallest unit is more stressed.

23.16.5 Direct combinatorial or auctioneering switching

Here the relay assesses the kVAr requirement of the system and switches ON all the required capacitors simultaneously. Theoretically any size of capacitor units can be used. But when a capacitor is taken out for maintenance, this can create confusion in the p.f. correction. The relay will not be aware of this and act accordingly. The bank size may also be large and cause switching surges.

23.16.6 Special sequencing

These are sequencers and can sequence the switching of capacitors in any fixed pattern. Capacitors can be automatically taken out of the circuit and others introduced in their place by a device known as 'the load rotator'.

A good relay can be modified to perform a particular switching sequence during ON and OFF and both sequences need not be same. The following is a type of relay that can be modified to perform any desired switching pattern.

23.16.7 Binary switching

This is a highly recommended method of capacitor switching for installations that are large and require very fine monitoring and correction of p.f. with the smallest number of banks. The entire reactive requirement is arranged in only a few steps yet a small correction up to the smallest capacitor unit is possible. The relay is sequenced so that through its binary counter the required switching is achieved in small steps, with just four or six sets of capacitor units or banks. The operation of the entire sequence can be illustrated as follows:

1 **A four-stage binary** The capacitor units or banks are arranged in the ratio 1:2:4:8. The four-stage capacitor bank is switched in one to fifteen steps (summation of 1 + 2 + 4 + 8), giving fifteen different values of reactive power control in small steps of one unit each. To achieve this, the relay goes up and down only one step at a time. For example, if we have to switch 75 kVAr in small steps, this can be arranged in the ratio of 5:10:20:40 kVAr units. These capacitors can be switched in steps of 5 kVAr each (total 15 steps). Table 23.9 illustrates the switching sequence for switching ON or OFF all the capacitor units through a four-stage relay. Since the relay will switch ON in steps of 5 kVAr only, fast switching may be constrained, particularly when a charged unit, which had been recently out and may be fully charged, is required to be switched again. This delay can be eliminated with the use of special discharge devices, which would make it possible to achieve fast switching. Timers may be introduced into the switching circuit to allow for the thus reduced discharge time between two consecutive switchings.

Table 23.9 A four-stage binary scheme

Switching steps	*Capacitor units*				*Total switched kVAr in steps of 5 kVAr each*
	1st 5 kVAr	*2nd 10 kVAr*	*3rd 20 kVAr*	*4th 40kVAr*	
1	×	–	–	–	5
2	–	×	–	–	10
3	×	×	–	–	15
4	–	–	×	–	20
5	×	–	×	–	25
6	–	×	×	–	30
7	×	×	×	–	35
8	–	–	–	×	40
9	×	–	–	×	45
10	–	×	–	×	50
11	×	×	–	×	55
12	–	–	×	×	60
13	×	–	×	×	65
14	–	×	×	×	70
15	×	×	×	×	75

× indicates the units that are ON.

2 **A six-stage binary** Now the capacitors are arranged in the ratio of 1:2:4:8:16:32 units, i.e. a six-stage capacitor bank can be switched in 63 steps, with different switching combinations, at a difference of just one unit. If the smallest unit is of 5 kVAr, a total correction of 315 kVAr is possible in steps of 5 kVAr each with just six sets of capacitor units and banks in the ratio of 5:10:20:40:80:160 kVAr. The rest of the sequencing is the same, as illustrated for four-stage binary. The six-stage sequencing scheme can be developed along similar lines to those in Table 23.9.

A six-stage binary scheme should normally be adequate to switch even very large banks. Yet this sequencing can be further modified to achieve a more particular sequencing pattern when required, as noted below.

23.16.8 Modified binary switching

A fifteen- or sixty-three-step switching, as noted above, may be cumbersome and require too large a time gap to switch. Switchings in such small steps may indeed not be necessary. It is possible to modify the sequencing of the relay to switch all the units in just a few steps by accepting a few specific jumps, skipping a few steps in between still retaining the feature of small corrections. A typical modified six-stage scheme is shown in Table 23.10, achieving full switching in just 18 steps and yet maintaining quite small steps, in this case 20 kVAr and corrections, still in steps of 5 kVAr each. A four-stage scheme can be modified to only six steps, as indicated in the first six steps of this table.

The binary scheme can be modified to suit any other requirement also. For example, for an induction furnace, requiring very fast correction, the scheme may be modified, to have six stages in the ratio of 10:20:40:80:160:160 kVAr to make a total of 470 kVAr and corrections in steps of 10 kVAr each.

For loads with fast variations, this type of a modified version too may be sluggish, due to step-by-step tuning. In such cases it is possible to employ two relays, one for coarse correction, such as through a serial relay (FIFO) which can quickly switch the large banks, and the other for fine tuning, which may be a binary relay. These two relays may be combined into one hybrid unit. The binary scheme can thus be modified to suit any required duty with prompt and finer corrections and least strain on a particular unit or on the system.

23.17 PF correction relays

The basic principle of this relay is the sensing of the phase displacement between the fundamental waveforms of the voltage and current waves of a power circuit. Harmonic quantities are filtered out when present in the

Table 23.10 A six-stage modified binary scheme

Switching steps		*Capacitor bank*						*Total switched kVAr*
		1st 5 kVAr	*2nd 10 kVAr*	*3rd 20kVAr*	*4th 40kVAr*	*5th 80 kVAr*	*6th 160 kVAr*	
1	*	×	–	–	–	–	–	5
2		–	×	–	–	–	–	10
3		×	×	–	–	–	–	15
7		×	×	×	–	–	–	35
11		×	×	–	×	–	–	55
15		×	×	×	×	–	–	75
19		×	×	–	–	×	–	95
23		×	×	×	–	×	–	115
27		×	×	–	×	×	–	135
31		×	×	×	×	×	–	155
35		×	×	–	–	–	×	175
39		×	×	×	–	–	×	195
43		×	×	–	×	–	×	215
47		×	×	×	×	–	×	235
51		×	×	–	–	×	×	255
55		×	×	×	–	×	×	275
59		×	×	–	×	×	×	295
63		×	×	×	×	×	×	315

*Modified binary for a four-stage scheme

Note: It is possible to achieve any correction within a step of one unit only (5 kVAr in the above case).

system. This is a universal practice to measure the p.f. of a system to economize on the cost of relay. The actual p.f. of the circuit may therefore be less than measured by the relay. But one can set the relay slightly higher (less than unity), to account for the harmonics, when harmonics are present in the system.

From this phase displacement, a d.c. voltage output is produced by a transducer circuit. The value of the d.c. voltage depends upon the phase displacement, i.e. the p.f. of the circuit. This d.c. voltage is compared with a built-in reference d.c. voltage, adjustable by the p.f. setting knob or by selecting the operating band provided on the front panel of the relay, as shown in Figure 23.38. Corrective signals are produced by the relay to switch ON or OFF the stage capacitors through a built-in sequencing circuit to reach the desired level of p.f.

A little lower p.f. than set would attempt to switch another unit or bank of capacitors, which may overcorrect the set p.f. Now the relay would switch off a few capacitor units or banks to readjust the p.f. and so will commence a process of hunting, which is undesirable. To avoid such a situation the sensitivity of the comparator is made adjustable through the knob on the front panel of the relay. The sensitivity control can be built in terms of phase angle (normally adjustable from 4 to 14 degrees electrical) or percentage kVAr. The sensitivity, in terms of an operating band, helps the relay to avoid a marginal overcorrection or undercorrection and hence the hunting.

As soon as the system's actual p.f. deviates from the pre-set limits, the relay becomes activated and switches in or switches out capacitor units one by one, until the corrected p.f. falls within the sensitivity limit of the relay.

The p.f. correction relays are normally available in three versions, i.e.

- Electromagnetic (being quickly outdated). They are very slow, and may take up to 2 minutes or more to initiate a correction.
- Solid state-based on discrete ICs.
- Solid state-based on micro-controllers (microprocessors).

A delayed correction may not be desirable in applications that have a fast variation of loads such as rolling mills, induction furnaces, arc furnaces, all types of welding loads, power presses, hammers and elevators etc. Such type of loads draw reactive power from the supply source. Since the loads change rapidly, unless they are compensated promptly they may cause voltage fluctuations, low p.f. and high harmonics. A rapid voltage drop may even trip the load, which may cause serious damage to machines in operation. For instance, in a rolling mill, the mill may be damaged as the process ingots may be half-way through between the rolls when the mill stopped.

With application of solid-state technology, this shortcoming of an electromagnetic relay is automatically overcome. The solid-state relays are available with switching stages as many as from 2 to 16. For special applications, they can be designed for even higher numbers of steps.

A time delay is built in to allow discharge of a charged capacitor up to 90% before it is reswitched. This is achieved by introducing a timer into the relay's switching

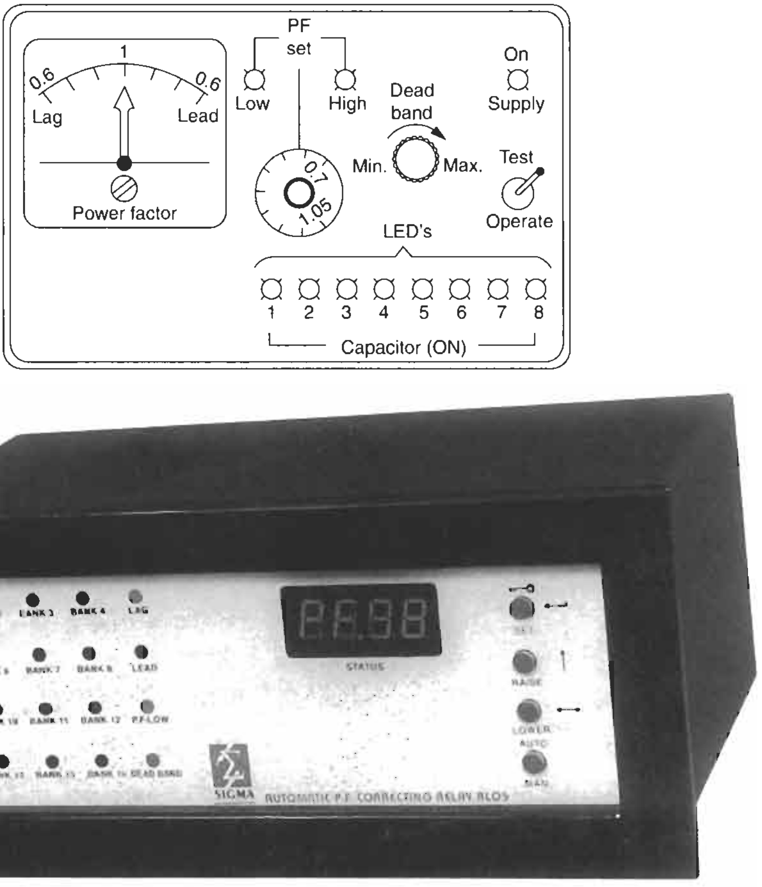

Figure 23.38 Typical front views of automatic power factor correction relays

circuit. The timer comes on whenever an OFF signal occurs, and blocks the next operation of a charged capacitor, even on an ON command, until it is discharged to at least 90% of the applied voltage. This feature ensures safety against an overvoltage. Normally this time is 1–3 minutes for LT and 5–10 minutes for HT shunt capacitors (Section 26.3.1(5)) unless fast-discharge devices are provided across the capacitor terminals to reduce this time. Fast-discharge devices are sometimes introduced to discharge them faster than these stipulations to match with quickly varying loads. The ON action begins only when the timer is released.

The time of switching between each relay step is, however, quite short, of the order of 3–5 seconds. It includes the timings of the control circuit auxiliary relays (contactors). It may be noted that of this, the operating time of the static relay is scarcely of the order of three to five cycles.

In rapidly changing loads it must be ensured that enough discharged capacitors are available in the circuit on every close command. To achieve this, sometimes it may be necessary to provide special discharge devices (Section 25.7) across the capacitor terminals or a few extra capacitor units to keep them ready for the next switching. It may require a system study on the pattern of load variations and the corresponding p.fs. Fast switching, however, is found more often in LT systems than in HT. HT systems are more stable, as the variable loads are mostly LT.

The above discussion is generally related to IC-based solid-state relays and in most parts to microprocessor-based relays of the more rudimentary types.

23.17.1 Microcontroller (microprocessor)-based relays

Microprocessors are the latest technology in the field of p.f. correction. Switching can be programmed through any of the switching sequences described above. Correction now is much faster, as noted already.

The relay can also be programmed to identify a discharged capacitor of the required capacity for the next switching, in which case it would require no sequential operation. By calculating the p.f. level of the system the relay can switch ON/OFF the necessary capacitor units from among the eligible units available for the next switching. The switching is so programmed that all the units of the same rating have almost the same operating hours. The normal operation of a microcontroller-based relay can be programmed along the following lines:

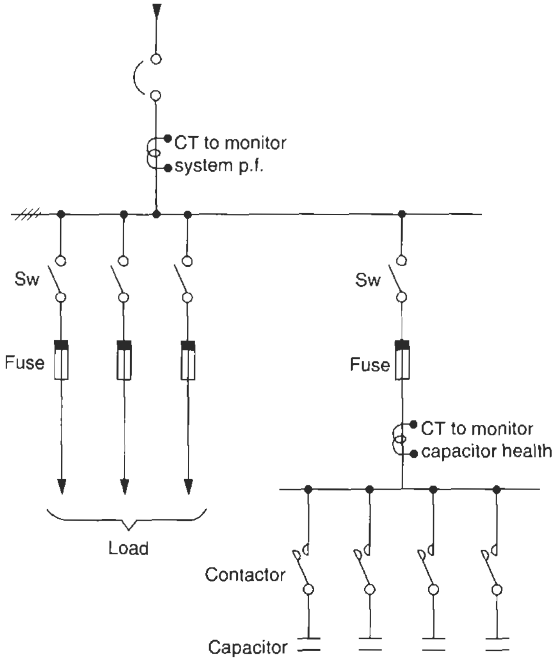

Figure 23.39 Location of monitoring CTs for static relays

- As soon as it is switched on, it shifts to a 'learn mode'.
- In 'learn mode', it measures the kVAr value of each capacitor unit in terms of C in μF by switching them one by one through the CTs provided in the incoming of the capacitor circuit. The CTs are provided so as to measure the current of the capacitor circuit alone and not of other loads (Figure 23.39).
- It stores all these data in its memory.
- After every correction the relay again carries out the measurements on the capacitor units (periodically, say, in 24 hours in supervisory mode), to monitor their health and to detect for any deterioration. When the capacitance of a unit falls below the acceptable level it can emit an alarm.
- Similarly it can be programmed to measure the load unbalance if any, by measuring the kVAr in each phase and provide an appropriate signal.*
- At the start of the correction cycle the relay calculates the required kVAr, examines the available capacitor values stored in its memory, takes a decision to switch ON or OFF the appropriate capacitors and switches them in rapid succession to reach the target p.f. in the least possible time. Now it uses the CTs provided in the main incoming circuit (Figure 23.39).
- It can identify the next ideal unit for switching.
- To achieve the desired level of p.f. it switches on the capacitor unit which is nearest to the required rating and available for the next switching or switches off a few units in a similar way.
- Each capacitor circuit has a software timer which reswitches the unit only when it has timed out.
- It is not necessary to arrange capacitors in any particular order, nor of particular ratings for the different stages. But, as mentioned earlier, when desired it can also be programmed for any switching scheme noted above.
- The units need not be very small or very large.
- The relay can be programmed to store the operating history of the cumulative service hours for each unit to obtain uniformity in ageing of each unit.
- The relay can also be programmed to provide a counter for the number of switching operations each capacitor has already performed on per day, per month or yearly bases.*
- Since the relay is connected in the same way as a meter is, it can read, calculate, and display all the desired operating parameters such as, V, I, f, p.f., kVAr, kW, and kVA as well as kWh, kVArh and maximum demand.*
- The relay can be connected to a computer and transmit all such data to a remote station for further monitoring and control.

Note

To ensure proper sensing of the incoming current and its phase displacement by the relay it is essential that the CTs ratio and their VA burden chosen for the required duty are close to the actual requirement as noted in Table 15.8. Sometimes this fact is overlooked and CTs with a much higher VA burden or ratio or both are chosen while the secondary circuit may not be adequately loaded. In this case the CTs may not accurately transform the primary parameters to the secondary and, in turn, the relay may not send accurate signals. Moreover, the relay itself may operate only at minimum 1% or more of its rated current (1 or 5 A), depending upon its design and type (IEC 60051-1).

---

*These are special features that can be built into the relay. But each may involve an element of cost and the relay manufacturers may therefore provide only the essential features as standard and the remaining ones on request.

Relevant Standards

IEC	*Title*	*IS*	*BS*
60051-1/1997	Direct acting indicating analogue electrical measuring instruments and their accessories Definitions and general requirements	1248-1 to 9	BS 89-1/1990
60947-3/1998	Specification for LV switchgear and controlgear. Switches, disconnectors, switch-disconnectors and fuse-combination units	13947-3/1993	BS EN 60947-3/1992
60947-4-1/1990	Low voltage switchgear and controlgear Electromechanical contactors and motor starters	13947-4-1/1993	BS EN 60947-4-1/1992
60143-1/1992	Series capacitors for power systems	9835/1991	BS EN 60143-1/1993
60831-1/1996	Shunt power capacitors of the self healing type for a.c. systems having rated voltage up to and including 1000 V	13340/1993	BS EN 60831-1/1998
60871-1/1997	Shunt capacitors for a.c. power system having rated voltages above 1000 V	13925-1/1998	BS EN: 60871-1/1998
60931-1/1996	Shunt power capacitors of non self-healing types up to and including 1000 V General performance, testing and rating. Safety requirements. Guide for installation and operation	13585-1/1994	BS EN 60931-1/1996

Relevant US Standards ANSI/NEMA and IEEE

ANSI/IEEE C.37.012/1989	Application guide for capacitive current switching of a.c. HV circuit breakers rated on a symmetrical current basis
ANSI/IEEE C.37.26/1991	Guide for methods of power factor measurement for LV inductive test circuits
ANSI/IEEE-519/1993	Guide for harmonic control and reactive compensation of static power converters
ANSI/IEEE 643/1992	Guide for power line carrier application
ANSI/IEEE 776/1998	Recommended practice for inductive coordination of electrical supply and communication lines
ANSI/IEEE 1036/1993	Guide for application of shunt power capacitors
ANSI/IEEE 1137/1998	Guide for the implementation of inductive coordination mitigation techniques and application
ANSI C93.1/1981	Power line carrier coupling capacitors
NEMA-107/1993	Method of measurement of radio influence voltage (RIV) of HV apparatus
NEMA/ICS-2/1993	Industrial control and systems, controllers, contactors and overload relays, rated not more than 2000 V a.c. or 750 V d.c.

Notes

1 In the tables of Relevant Standards in this book while the latest editions of the standards are provided, it is possible that revised editions have become available. With the advances of technology and/or its application, the updating of standards is a continuous process by different standards organizations. It is therefore advisable that for more authentic references, readers should consult the relevant organizations for the latest version of a standard.

2 Some of the BS or IS standards mentioned against IEC may not be identical.

3 The year noted against each standard may also refer to the year of its last amendment and not necessarily the year of publication.

List of formulae used

Influence of harmonics on the performance of a capacitor unit

(i) By the harmonic voltage

$$V_h = \sqrt{(V_1^2 + V_{h3}^2 + V_{h5}^2 + V_{h7}^2 + \ldots V_{hn}^2)} \qquad (23.1)$$

V_h = effective harmonic voltage
V_1 = system voltage
V_{h3}, V_{h5}, V_{h7} and $V_{hn\,etc.}$ = magnitudes of the harmonic voltage components in terms of fundamental voltage, at different harmonic orders

(ii) By the harmonic currents

$$I_{ch} = \sqrt{(I_c^2 + 9I_{ch3}^2 + 25I_{ch5}^2 + 49I_{ch7}^2 + \ldots n^2\, I_{chn}^2)} \qquad (23.2)$$

I_{ch} = effective harmonic current
I_c = rated current of the capacitor
I_{ch3}, I_{ch5}, I_{ch7} and I_{chn} etc. = magnitude of the harmonic current components at different harmonic orders

(iii) Harmonic output of a capacitor unit Rating of a shunt capacitor

$$\text{kVAr} = \frac{\sqrt{3}\cdot V^2}{1000\cdot X_c} \qquad (23.3)$$

$$\text{or kVAr} = \frac{\sqrt{3}\cdot V^2\cdot 2\pi f\cdot c}{1000} \qquad (23.4)$$

Effective harmonic output

$$\text{kVAr}_h \propto \sqrt{V_1^2 + 3\cdot V_{h3}^2 + 5\cdot V_{h5}^2 + 7\cdot V_{h7}^2 + \ldots n\cdot V_{hn}^2)} \qquad (23.5)$$

Influence of harmonics on telephone lines

(I) Electrostatic induction

Blocking circuit

$$f_h = \frac{1}{2\pi\cdot\sqrt{LC}} \qquad (23.6)$$

f_h = notch frequency

$$V_c = \frac{C_c}{C_c + C_g}\cdot\frac{V_r}{\sqrt{3}} \qquad (23.7)$$

V_c = induced electrostatic voltage in the communication lines
C_c = coupling capacitance between the power and the communication lines
C_g = ground circuit capacitance of the communication lines

Filter circuits: use of reactor enhances voltage across the capacitor banks

Rise in voltage,

$$\frac{V_C}{V_{ph}} = \frac{X_C}{X_C - X_L} \qquad (23.8)$$

V_{ph} = system voltage
V_C = voltage across the capacitor banks
X_C = capacitive reactance
X_L = inductive reactance

Single-capacitor switching

(i) Inrush current

$$I_m = I_s\left(1 + \sqrt{\frac{I_{sc}}{I_s}}\right) \qquad (23.9)$$

I_m = maximum inrush or making current, while switching an unchanged capacitor unit.
I_s = maximum steady-state current (capacitor peak full load current ($\sqrt{2}I_c$))
I_{sc} = fault level of the system

$$I_m = I_s\left(1 + \sqrt{\frac{X_{C1}}{X_{L1}}}\right) \qquad (23.10)$$

L_1 and C_1 are the switching circuit parameters

(ii) Switching frequency

$$f_s = f\sqrt{\frac{(\text{Short circuit kVA})}{(\text{Capacitor kVAr})}} = f\cdot\sqrt{\frac{X_C}{X_L}} \qquad (23.11)$$

f_s = switching or transient frequency
f = power frequency
X_C = power frequency capacitive reactance of the circuit
X_L = power frequency inductive reactance of the circuit

Parallel switching of capacitor banks

(i) Inrush current

$$Z_s = \sqrt{\frac{L_2(C_1 + C_2)}{C_1\cdot C_2}} \qquad (23.12)$$

Z_s = surge impedance
L_2 = circuit inductance between the capacitors in henry
C_1, C_2 = capacitances of two capacitors

$$I_m = V_p\sqrt{\frac{C_1\cdot C_2}{L_2(C_1 + C_2)}} \qquad (23.13)$$

I_m = peak inrush current in parallel switching
V_p = line to neutral peak voltage

(ii) Switching frequency

$$f_s = \frac{1}{2\pi}\sqrt{\frac{(C_{1eq.} + C_x)}{L_{2eq} \cdot C_{1eq} \cdot C_x}} \qquad (23.14)$$

L_{eq} = equivalent inductance of the capacitors already switched
$L_{2eq} = L_{eq} + L_x$
C_{1eq} = equivalent capacitance of the capacitors already switched
C_x = capacitance of the capacitor being switched

Limiting inrush currents

$$I'_m = V_p\sqrt{\frac{C_1 \cdot C_2}{(L_2 + L)(C_1 + C_2)}} \qquad (23.15)$$

I'_m = improved inrush current
L = series inductance being introduced
V_p = line to neutral peak voltage

Designing an inductor to limit the inrush currents

$$L = \frac{4 \cdot N^2}{10^9} \cdot r\left(\log_e \frac{8 \cdot r}{0.7788 \cdot r_1} - 2\right)\text{henry} \qquad (23.16)$$

L = self-induced inductance of the coil in henry
N = number of turns of the coil
r = mean radius of the coil in cm
r_1 = radius of the cross-section of the coil in cm

Determining the kVAr rating for improving p.f. from cos ϕ_1 to cos ϕ_2

$$\text{kVAr}_1 - \text{kVAr}_2 = \text{kW}(\tan\phi_1 - \tan\phi_2) = \text{kW}\cdot\text{K} \qquad (23.17)$$

Further reading

1 AIEE Committee, *Report on the Operation of Switched Capacitors*, Vol. 74, Part III, 1255–1261, December (1955).
2 Central Board of Irrigation and Power, India,'Interference of power lines with telephone lines' Technical Report No. 29, Research Scheme on Power, March (1982).
3 'Cigre, Harmonics voltage unbalanced voltage dips and voltage fluctuations', Study Committee 36, 'Interference,' Working Group 36.05, Published by Electra, March (1989).
4 Johnson, I.B., Schultz, A.J., Schultz, N.R. and Shores, R.B., 'Some fundamentals on capacitance switching', *AIEE Transactions*, 727–736, August (1955).
5 Narasimha, G., 'Capacitor switching and its effect on LT switchgear', *Electrical India*, 5–8, 30 November (1982).
6 Savir-Silbermann, S., 'Surges caused by switching of capacitor banks', *Electrical Energy*, 88–95, March (1958).
7 Sharma, S.P., 'Switching capacitor banks in L.T. switchgear', *IEEMA Journal*, September (1989).
8 Shenoy, G., 'Reducing harmonic currents and improving power factor in installations having predominant thyristor loads', *Siemens Circuit*, **XVII,** No. 1 (1982).
9 Vansickle, R.C. and Zaborszky, J., 'Capacitor switching phenomena', *AIEE Transactions*, **70**, Part I, 151–159 (1951).
10 Vansickle, R.C. and Zaborszky, J., 'Capacitor switching phenomena with resistors', *AIEE Transactions*, 971–977, August (1954).

24

System Voltage Regulation

Contents

24.1 Capacitors for improvement of system voltage regulation

Another important application of capacitors is to improve the voltage regulation of a power supply system. The regulation of a power system at the receiving end is defined by

$$\% \text{ Regulation} = \frac{\text{Voltage at no load} - \text{Voltage at full load}}{\text{Voltage at no load}} \times 100 \quad (24.1)$$

Higher regulation will mean a higher voltage fluctuation at the receiving end, resulting in poor stability of the system. Regulation up to 3–5% may be considered satisfactory. To improve the regulation of a system, power capacitors can be used in series at the receiving end of the system.

24.2 Series capacitors

The basic purpose of series capacitance is to offset the content of excessive line inductance, reduce the line voltage drop, improve its voltage regulation and enhance the power transfer capability and hence the stability level of the system. It can accordingly find application at all high-current and high-impedance loads such as

- An electric arc furnace, where heating is caused by arc plasma between the two electrodes. The arcing makes the circuit highly inductive, besides generating unbalanced currents (third harmonics), due to different touchdown arc distances in the three electrodes which make it a non-linear impedance load.
- An induction furnace, where the heating is due to eddy current losses induced by the magnetic field.
- Electric arc and resistance welding transformers as for spot, seam and butt welding.
- A long transmission line, say, 400 km and more, for a radial line and 800 km and more for a symmetrical line, as discussed later.
- It can also be applied to an HT distribution network that has a high series inductive reactance to improve its receiving-end voltage.

In all these applications a shunt capacitance is of little relevance, as it will not be able to offset the line inductive reactance, X_L, with X_C, and hence will be unable to contain the switching voltage dips at the load end in furnaces and also voltage drops during a change of load in a transmission or HT distribution network. A shunt capacitor offsets the reactive component of the current (Figure 23.2) while the line voltage drop, for the same line current, remains unaltered. Series capacitors are therefore more appropriate where voltage regulation is the main criterion, rather than line loss reduction. Summarizing the above, the main functions of a series capacitance can be stated as follows:

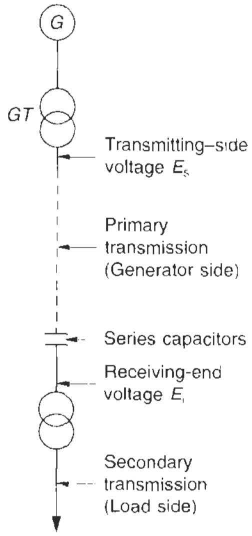

Figure 24.1 A simple transmission network with series compensation

1. To neutralize and reduce substantially the content of inductive reactance of the line. Refer to a simple transmission network with series compensation, shown in Figure 24.1.
2. To alter the circuit parameters L and C, reduce the line impedance and hence the voltage drop, and also to enhance utilization, i.e. the power transfer capability of the line.
3. To improve the far end or the load-side voltage, in other words, the voltage regulation and the stability level of the system.

Notes

1. Unlike the above, a shunt capacitor alters the load current by offsetting the reactive component of the current (Figure 23.2) by improving the load p.f and altering the characteristics of the load.
2. A series capacitor has little application in an LT system due to the high content of line resistance and very little of inductance. Any amount of reactive compensation will scarcely influence the performance of the line, as a result of the high content of IR, compared to IX_L.

Series and shunt capacitors both provide the same degree of compensation. But it is the correct reactive support that provides a more stable system less prone to load and voltage fluctuations. Thus a judicious choice between the shunt and the series capacitors is required. In the following our main thrust is to arrive at the most appropriate type and extent of reactive support to achieve a higher level of utilization of a power transmission or distribution system, on the one hand, and more stability, on the other.

24.3 Rating of series capacitors

Referring to Figure 24.2, this can be expressed by

$$\text{kVAr} = 3 \cdot I_{\text{f}}^2 \cdot X_C \quad (24.2)$$

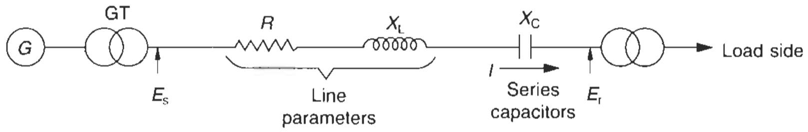

$X_C = 1000 \cdot \frac{kVAr}{3I^2}$

$C = \frac{3I^2}{1000 \cdot kVAr \cdot 2\pi f}$ F/phase

$kVar$ = 3ϕ rating of the series capacitors

I = Rated current of series capacitors

Figure 24.2 The single-line diagram for Figure 24.1

where

I_l = line current. The value of line current to be considered for calculating the size of capacitor banks must take account of the likely maximum load variation during normal operation or the overload protection scheme provided for the capacitors, whichever is higher.

X_C = capacitive reactance of the series capacitors per phase.

and voltage rating = $I_l \cdot X_C$.

This rating will be much less than the nominal voltage of the system. But since the series capacitors operate at the line voltage, they are insulated from the ground and from each phase according to the system voltage. For this purpose, they are generally mounted on individual platforms for each phase, which are adequately insulated from the ground. Figure 24.3 shows such an installation.

24.4 Advantages of series compensation

(i) Automatic voltage regulation: Since the VAr of a series capacitor $\propto I_C^2$, the voltage regulation is

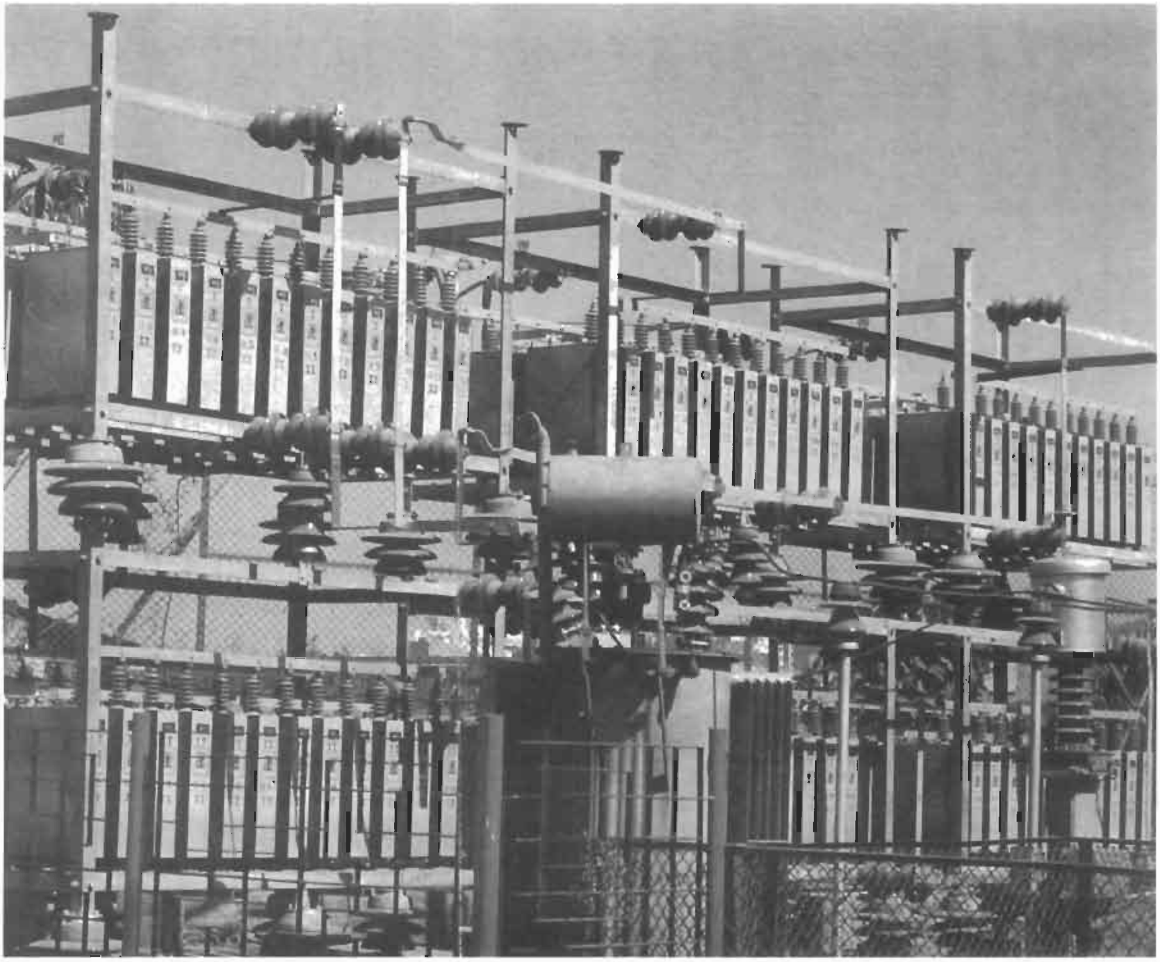

Figure 24.3 The installation of HT capacitor banks (Courtesy: Khatau Junker Ltd)

automatic, as the VAr of the series capacitors will vary with a change in the load current. When the voltage drops, the line current will rise, to cope with the same load demand and so will rise the VAr of the capacitors also providing an automatic higher VAr compensation. When the voltage rises, the current will fall and so will fall the VAr compensation. No switching sequence, as necessary in shunt capacitors, is therefore required for series capacitors.

(ii) They may be connected permanently on the system, as they compensate the line reactance, which is fixed, though the load reactance may be variable, unlike shunt capacitors, which are to be monitored for their addition or deletion during peak and offpeak load periods respectively. The costs of switching equipment and operational difficulties are therefore low in series capacitors.

(iii) They also provide the same degree of p.f. improvement as the shunt capacitors and do so by the leading voltage phasor rather than the current phasor.

Limitations

(a) It is not advisable to use them on circuits that have fluctuating loads or frequent inrush currents, such as switching of motor loads. During a start the latter will cause an excessive current, I_{st}, and proportionately raise the potential difference across the capacitor units ($I_{st} \cdot X_C$) and overload them in addition to causing higher dielectric stresses. Series capacitors for such installations must be designed for very high voltages, say, up to $I_{st} \cdot X_C/1.5$, which will not be economical. Also, protection against overvoltages will still be essential as a safeguard against a similar contingency, as discussed later.

(b) It is possible that the natural (sub-harmonic) frequency ($1/2\pi\sqrt{LC}$, Section 17.6.3) of a system with series capacitors will fall below the fundamental frequency and render the system more prone to resonance. Now resonance may occur below the fundamental frequency. This may prove fatal under certain loading conditions and influence the source of supply in the following way:

1 Ferro-resonance effects

An L-C circuit is more prone to ferro-resonance effects during voltage fluctuations as a result of saturation of the iron core, which may be of a transformer or an inductor coil. On saturation, the inductance reduces drastically and becomes more prone to resonance with the capacitance of the circuit. Voltage fluctuations may occur due to switching operations, particularly of an unloaded line or load fluctuations (Section 20.2.1(2)). Although the line impedance will provide a sufficient dampening effect to automatically attenuate such a state, precautions are mandatory to avert the same. An inductive compensation, of the order of 40–50%, may be adequate to improve the system parameters and also avert a ferro-resonance effect. A more realistic approach to the problem is possible if a mathematical model of the ferro-resonance is developed and supplemented by experimentals to produce data to design an appropriate series compensation scheme.

2 Sub-synchronous resonance (SSR)

A series compensated network will have its natural frequency expressed by

$$f_h = \frac{1}{2\pi\sqrt{L.C_s}} \qquad \text{(Section 17.6.3)}$$

The above can also be expressed by

$$f_h = f \cdot \sqrt{\frac{X_{CS}}{X_l}} \qquad \text{(equation (23.11)}$$

where

f_h = natural frequency of the series circuit
f = nominal frequency of the system
L = natural reactance of the line per phase, including that of generator and load
$X_L = 2\pi \cdot f \cdot L$
C_S = series capacitance per phase

$$X_{cs} = \frac{1}{2\pi \cdot f \cdot C_s}$$

The frequency, f_h, will occur for only a few cycles during an abrupt change in the line parameters, such as during a switching operation or occurrence of a fault etc. (Section 17.6.3). To ensure that the circuit remains inductive under all conditions of load variations and fault, to avoid a capacitive mode of operation and an excessive charging voltage the content of X_L must remain higher than $X_{CS}(X_L > X_{CS})$. The natural frequency, f_h, therefore has to be necessarily lower than the power frequency of the system ($f_h < f$). This is an unusual transient phenomenon that occurs in a series compensated system which is adjusted for its natural frequency to maintain $X_L > X_{CS}$ and may have far-reaching implications. In the sub-synchronous range of a steam turbine generator this frequency may cause a resonance with the rotating masses of the turbogenerator rotor and generate electromechanical oscillations in the rotor. This may assume serious significance in large generators which have a number of natural mechanical frequencies of the rotating masses, in the range of 10–25 Hz. This frequency may coincide with the natural frequency of the system during a line disturbance and magnify the oscillations of the rotating masses beyond desirable limits. If unchecked, these oscillations may continue to magnify and result in the shearing off of the weakest part of the shaft. Although rare, serious damage has occurred in earlier years, when the turbine shaft had actually sheared off because of this phenomenon. Hydroturbine generators are less prone to such oscillations, as their natural mechanical frequency lies below 10 Hz. The natural frequency of a series compensated system may not reach this level.

These oscillations can be dampened with the use of filter circuits or by bypassing all or part of the series compensation during a line disturbance. Similar techniques are adopted while protecting

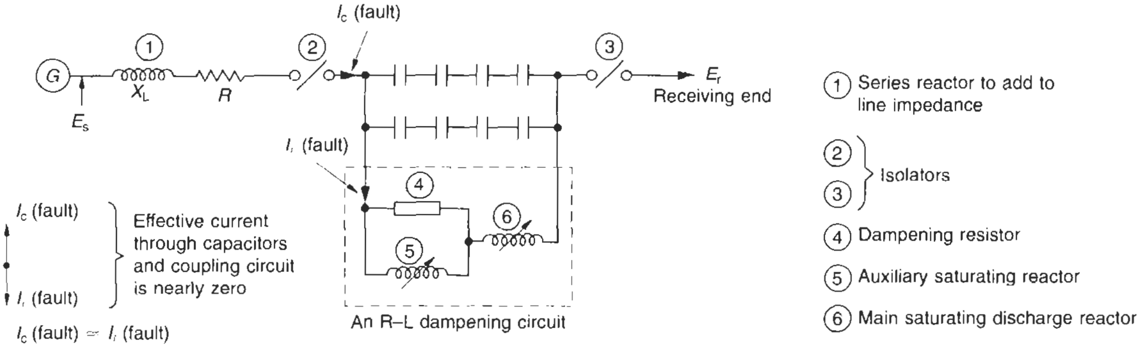

Figure 24.4 Dampening circuit across the series capacitors to limit the fault level

the series capacitors against fault conditions, as noted in Section 26.1.2(ii) and illustrated in Figure 24.4 (Figure 26.10.2(ii) redrawn). For critical installa-tions it is essential to first evaluate the likely frequencies of the rotating masses and then more exacting measures must be taken to avoid a resonance.

If a large induction motor is switched on such a system it is possible that its rotor may lock up at the sub-synchronous speed and keep running at higher slips. This situation is also undesirable, as it would cause higher slip losses in addition to higher stator current and overvoltage across the series capacitors.

3 **System fault level**

Since the line impedance, $R + J\ (X_L - X_C)$, will reduce with a series compensation, the fault level of the system will rise. It should not matter if the fault level of the system is determined by the impedance of the source of supply, ignoring any other impedance of the circuit (Section 13.4.1(5)). Moreover, such a situation is automatically averted through the protection of the series capacitors, as discussed below, by which the capacitors are by-passed during a line fault, the line restoring its original impedance, hence the original fault level. Nevertheless, when it is required to limit the system fault level, inductive coupling circuits may be provided to reduce the fault to the desired level. This is also discussed below:

The fault current can be limited by providing a dampening circuit, such as a short-circuit-limiting inductive coupling, across the series capacitors, as illustrated in Figure 24.4. This can be a combination of an R-L circuit. During normal operation this circuit will provide a high impedance and remain immune. On a fault, the high voltage across the capacitors will cause a heavy inductive current flow through the coupling circuit, which will neutralize the capacitive current through the capacitors and help keep the capacitors almost out of circuit (I_C fault $\simeq$ I_L fault), similar to a shorting switch, as discussed later. The normal condition is restored as soon as the fault condition is cleared. It may also be regarded as a filter circuit, as it would also help to dampen the system harmonics.

24.5 Analysis of a system for series compensation

Consider a simple system as shown in Figure 24.5(a).

1 When the line resistance, R, is significant compared to the line inductive reactance, X_L, there will be a

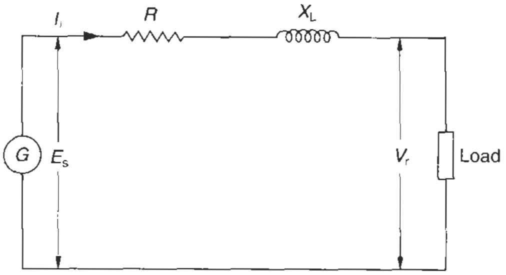

(a) Circuit diagram of an uncompensated line.

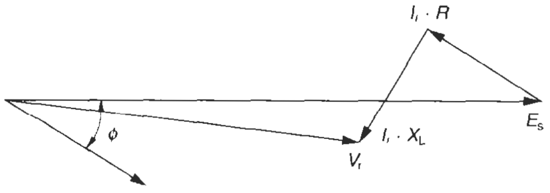

(b) When 'R' is significant

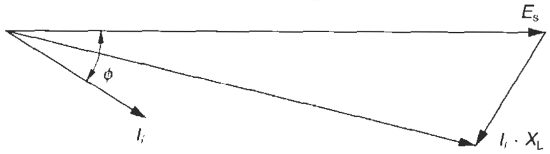

(c) When 'R' is insignificant

Figure 24.5 Receiving-end voltage phasor diagram on load, in an uncompensated line limited use of series capacitors (X_{CC}) in view of a large content of I.R. See the phasor diagram in Figure 24.5(b). Also refer to Figure 24.5(c) when R is insignificant. Now the receiving-end voltage, V_r, can be improved by offsetting the reactive component with the use of series capacitors.

2 When $R << X_L$: Now X_{CC} (Figure 24.6(a)) will offset the inductive component and improve the p.f., capacity of the system and also the receiving-end voltage, as illustrated in Figure 24.6(b). This advantage is not possible through a shunt capacitor. Accordingly, it may be noted that the difference between the compensated and the uncompensated receiving-end voltages will be significant only when the content of $I \cdot R$ is low, compared to $I \cdot X_L$.

In certain distribution networks the natural $I \cdot R$ drop itself may be sufficiently high to cause a dip at the receiving end that is more than required even when the reactive component is fully compensated. Consequently, such a distribution network may have to be operated underutilized or the size of the current-carrying conductors may have to be increased to reduce the value of R, and hence the content of $I \cdot R$, and thus raise the capacity of the line. It may thus be concluded that

- In smaller cross-sectional areas of the current-carrying conductors of the distribution network, i.e. for low-capacity networks where R/X_L is high, series compensation may be redundant.
- For higher cross-sectional areas, i.e. for high-capacity networks where R/X_L is low, series compensation will be useful.

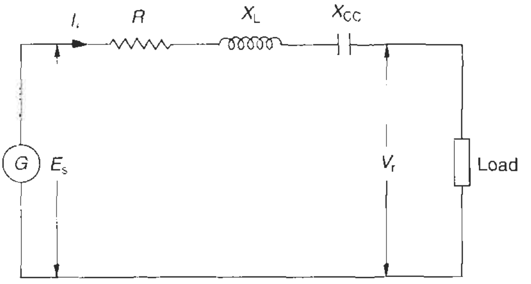

Figure 24.6(a) Circuit diagram of a series compensated line

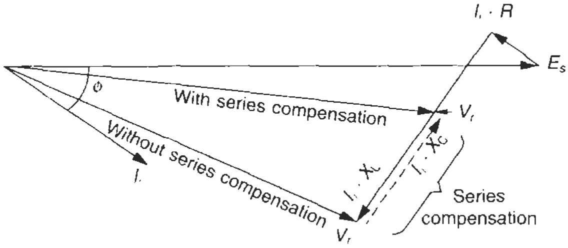

Figure 24.6(b) Phasor diagram of the series compensated system

We will notice subsequently that series and shunt compensation are complementary. What a shunt capacitor cannot do, a series capacitor does and vice versa. On a secondary transmission system, say up to 66 kV, a shunt compensation may always be necessary to improve the power factor, as the load would mainly be inductive. A series compensation may become essential, to improve the stability of the system, to cope with load fluctuations, switching of non-linear loads and voltage fluctuations occurring on the other power system or the grid to which this system may be connected.

Series capacitors have also proved to be an easy way of relieving an already overstressed distribution network to meet ever-growing load demands, particularly when it is not practicable to add another line for reasons of cost or space.

24.6 Reactive power management

Through careful management of the reactive power, making use of shunt and series capacitors and reactors, we can provide support to an overstressed LT or HT supply system, and achieve optimum utilization and a higher level of stability.

In LT systems reactive control is provided to improve the load p.f. and hence its load-carrying capacity, as discussed in Chapter 23. This is achieved by offsetting the inductive content of the load current at the receiving or the consumer end by the use of shunt capacitors and hence support the system by reducing line losses and improving its active load current ($I_1 \cos \phi$) carrying capacity.

In HT systems too the concept is very similar. Now, besides the p.f., the stability of the system also defines the prerequisites for efficient power transfer over long distances. The use of both shunt and series compensations may now be necessary to achieve the desired goal.

Note

The reactive power should not be carried over long distances for it may cause higher voltage drops and steep voltage gradients, on the one hand, and higher line losses due to higher line currents, on the other. Hence, it will affect the utilization capability of the entire system, including that of the generating source, transformers, overhead lines, cables and other line equipment. Emphasis to control the p.f. therefore is at the distribution or the consumer end. In practice, it is not possible to follow this rule to the desired extent, due to many constraints. One constraint is ignorance on the part of the consumer. It is therefore essential to compensate the omitted uncompensated load at the secondary transmission.

In HV and EHV systems (132 kV and above), even a shunt inductive control may become necessary to offset the excessive charging currents, particularly during no-load or light-load periods, caused by the distributed leakage capacitances (C_0's) of the line, and relieve the system, particularly the generating source, from an unwanted burden of reactive load. Figures 24.7(b) and (c) show the distributed and equivalent single-line diagrams of an uncompensated transmission line illustrated in Figure 24.7(a). The distributed leakage capacitances C_0's cause the line-charging currents (i_{c0}'s) even when the far end

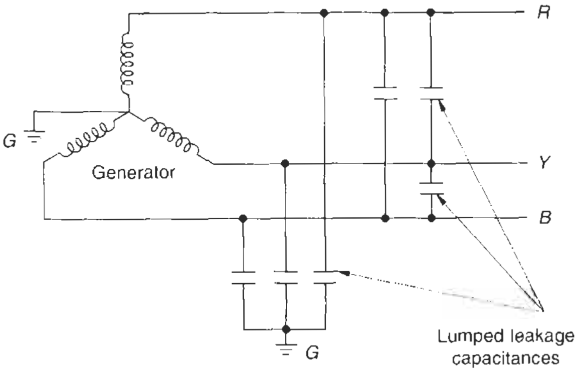

(a) Distributed line leakage capacitances

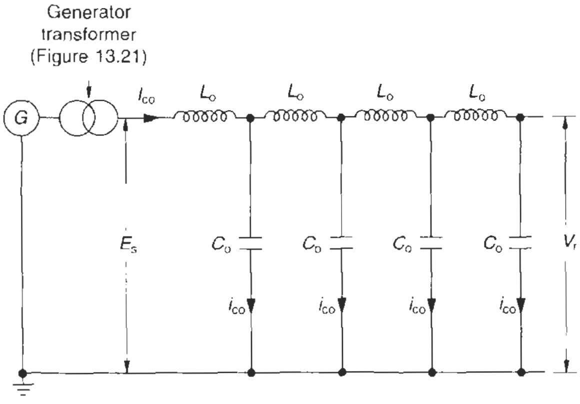

(b) Distributed line parameters

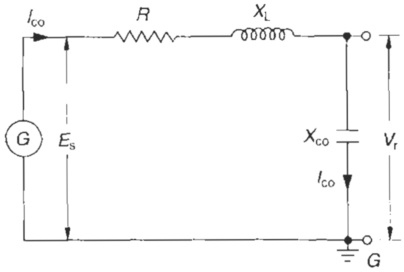

(c) Equivalent circuit diagram on no load

Figure 24.7 Representing an open circuited transmission line without compensation

of the line is open circuited. Figure 24.8 describes a normal current profile of such charging currents.

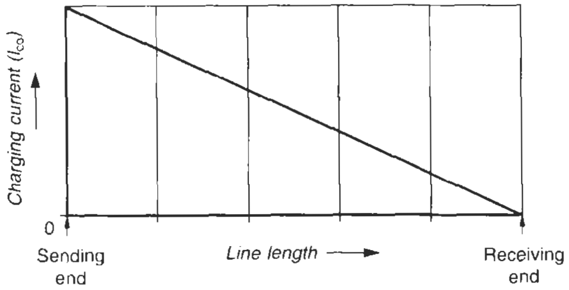

Figure 24.8 Charging current profile on no load in a transmission line

Capacitors play a vital role in the management of reactive control in power transmission and distribution systems. With industrial growth and growing demand for power for public services, utilities and consumer needs, efficient reactive power management is highly desirable. In the following text, we broadly consider the purpose and application of reactive power management, particularly in an HT power system. The design of a power transmission or distribution system is a different subject and is beyond the scope of this book. Reference may be made to work by many authors, some of which are provided in the further reading at the end of the chapter.

Some developing countries, where reactive power management practices have not been predominant, for whatever reason, consideration of cost being one, may suffer from fluctuating voltages, flickering lights, high line losses, reduced capacity of the power lines and their consequent overloadings etc, leading to frequent trippings and breakdowns. The active load current $(I_1 \cos \phi)$ becomes too low at low p.f.s. Frequent and wide voltage fluctuations lead to fusing of bulbs and failure of fluorescent lights, besides requiring a voltage stabilizer with each household appliance, such as TVs, air conditioners, refrigerators, ovens and computers.

All this increases the direct cost of the appliances, on the one hand, and is an additional burden on the already overloaded lines, on the other, by permanent losses of such voltage boosters, which further erode the p.f. of the system.

24.6.1 Objectives

The basic objectives of a reactive power management system can be identified by the following for LT and HT distributions:

(A)

1 Load balancing and reduction in negative phase sequence currents. In Section 16.12 we discussed load balancing of two generators where more emphasis is placed on the active control of power through speed control of the prime movers rather than its field (reactive) control. Active load balancing is more appropriate for the optimum utilization of a machine rather than reactive control. But in the case of a power transmission or distribution network it is the optimum utilization of the available active power through efficient reactive power management that is more relevant.

A load unbalance is a common feature in a power system, and can be the result of one or more of the following:

- A higher neutral current due to unequally distributed single-phase loads.

- Saturation of power transformers as a result of periodic overloading and load rejections.
- Increased ripples in the rectifier circuits, causing harmonics.
- Malfunctioning of some equipment, possibly because of a fault.
- Oscillating torque in the rotating machines as a result of load variations and harmonics present in the system.
- Feeding non-linear loads such as:
  - Induction furnaces
  - Arc furnaces and arc welders
  - Steel rolling mills
  - Large motors with periodic loading
  - Thyristor drives
  - Railway traction which is mostly through d.c. drives
  - And many loads which may have to be frequently switched

  All such loads generate harmonics and cause variations in the fundamental power frequency of the supply system which leads to distortion in the sinusoidal waveform of the voltage. This distortion may affect the quality of the supply system (voltage) beyond desirable limits. A non-sinusoidal and distorted supply system may adversely affect the different loads connected on the system, besides leading to outage of the system itself.

2 Maintaining a near-unity p.f.
3 Maintaining the frequency to near constant by suppressing the system harmonics.
4 Maintaining the receiving-end voltage at almost the rated voltage.

(B) Transmission of power

1 Enhancing the steady-state power transfer capability of the lines over long distances, or making short lines capable of transferring larger powers.
2 Improving the stability of the system by supporting the voltage at key points. Without compensation, the stability of the system becomes a limiting factor even for shorter line lengths and the system is rendered prone to frequent outages on small disturbances.
3 Reducing system oscillations and flickering caused by voltage fluctuations and system harmonics as a result of frequent and rapid changes in reactive power demand, loss of load, loss of generation or a system fault. Excessive voltage swings may cause tripping of industrial drives and even system outages. High-speed SVCs (Static VAr compensators, Section 24.10(2)) can overcome such situations by providing appropriate reactive support during system disturbances and maintaining a near-flat voltage profile through the length of the transmission line.
4 Providing voltage support when switching large loads.
5 Improving voltage regulation: both overvoltages (OVs) and undervoltages (UVs) are undesirable. An OV may cause ageing of the equipment's insulation and can lead to a flashover or eventual breakdown of the terminal equipment and line insulators. It may also lead to saturation of power transformers operating in the system. The transformers produce high currents, rich in harmonics, and cause ferro-resonance or sub-synchronous resonance. An UV will result in higher system loading than necessary and cause underutilization of the system capacity.

In the following we consider the case of a transmission line, 132 kV and above, being more typical and complex for the purpose of reactive control. Based on this, it would be easier to apply appropriate reactive control to a distribution network and large inductive loads such as an arc or induction furnace.

24.6.2 Analysis of an uncompensated transmission line

Current profile

A transmission line can be represented, as shown in Figure 24.7(b). In Tables 24.1(a) and (b), we show typical line parameters for different system voltages and line configurations. Because of line charging capacitances, C_0's, between conductors and conductors and ground, as shown in Figure 24.7(a) (higher significance in HV and EHV lines of 132 kV and above), and series inductance L_O, there is a charging current, I_O, even at no load and even when the far end of the line is open-circuited (Figure 24.7(c)). Figure 24.8 describes a normal profile for such charging currents. This current rises with the rise in line length and is highest at the generator end. As this phenomenon a function of system voltage it is negligible or nil in HT lines up to 66 kV. This current is totally capacitive, ignoring the effect of line resistance, R_O,. A transmission line, being a high power transfer system, has a very low content of R_O (Table 24.1(a)).

The magnitude of the charging current, I_O, will depend upon the content of C_o, which is a measure of line voltage, size of the conductor, spacing between the conductors and between the conductors and the ground etc. Table 24.2 provides the approximate values of charging current, I_O, and charging power for a few system voltages with different line configurations. The generated charging reactive power, by the line charging capacitances (C_o's), flows back to the generating source and has to be absorbed by it, even on no load, or a part of it during light loads. It is a strain on the field windings of the generator, as the machine under no load is underexcited, and underexcitation is not a healthy situation for a thermal turbogenerator because,

- A capacitive circuit magnifies the harmonic effects when present in the system, as discussed in Section 23.5.2, and gives rise to spurious voltages and currents, raising the normal V_1 and I_1 to V_h and I_{ch}, respectively.
- The stator windings are subject to overcapacitive voltages as a result of this, and the end turns particularly are endangered.
- Reduced field current reduces the voltage generated, which may affect the system's stability.
- The generator manufacturer can define the lowest

Table 24.1(a) Typical line parameters per circuit for HV and EHV transmission lines

Nominal voltage, V_r	*Conductor type*	*Positive sequence components*				*Zero sequence components*		
kV(r.m.s.)		R_O *Ω/km*	X_{LO} *Ω/km*	X_{CO} *Ω/km*	$Z_O = \sqrt{X_{LO} \cdot X_{CO}}$ *Ω*	R_n *Ω/km*	X_{Ln} *Ω/km*	X_{Cn} *Ω/km*
765	Quad Bersimis (QB)	1.142×10^{-2}	2.619×10^{-1}	2.44×10^5	252.8	2.633×10^{-1}	1.053	4.161×10^5
400	Twin Moose (TM)	2.979×10^{-2}	3.32×10^{-1}	2.88×10^5	309.22	1.619×10^{-1}	1.24	4.46×10^5
400	Twin AAAC (TA)	3.094×10^{-2}	3.304×10^{-1}	2.82×10^5	305.24	1.682×10^{-1}	1.237	4.37×10^5
400	Quad Zebra (QZ)	1.68×10^{-2}	2.544×10^{-1}	2.40×10^5	247.09	9.133	0.950	3.73×10^5
400	Quad AAAC (QA)	1.566×10^{-2}	2.682×10^{-1}	2.29×10^5	247.826	8.512	1.002	3.55×10^5
400	Triple Zebra (TZ)	2.242×10^{-2}	2.992×10^{-1}	2.74×10^5	286.32	12.186	1.112	4.23×10^5
220	Zebra (Z)	7.487×10^{-2}	3.992×10^{-1}	3.408×10^5	368.846	2.199×10^{-1}	1.339	5.421×10^5
132	Panther (P)	1.622×10^{-1}	3.861×10^{-1}	3.416×10^5	363.169	4.056×10^{-1}	1.622	> 6

Table 24.1(b)

Nominal voltage, V_r	*Conductor Type*	*Line inductance*		*Line capacitance*		*Velocity of propagation*	*Wavelength $\lambda = U/f$*
kV(r.m.s.)		X_{Lo} *Ω/km*	$L_o = \frac{X_{Lo}}{2\pi \cdot f}$ *henry (H)*	X_{CO} *Ω/km*	$C_o = \frac{1}{2\pi \cdot f \cdot X_{CO}}$ *n farad (nF)*[a]	$U = \frac{1}{\sqrt{L_o C_o}}$ *km/s*	*km*
765	QB	2.619×10^{-1}	8.33×10^{-4}	2.44×10^5	13.04	3.034×10^5	6.07×10^3
400	TM	3.32×10^{-1}	10.56×10^{-4}	2.88×10^5	11.05	2.927×10^5	5.85×10^3
400	TA	3.304×10^{-1}	10.51×10^{-4}	2.82×10^5	11.28	2.904×10^5	5.81×10^3
400	QZ	2.544×10^{-1}	8.09×10^{-4}	2.40×10^5	13.26	3.053×10^5	6.11×10^3
400	QA	2.682×10^{-1}	8.53×10^{-4}	2.29×10^5	13.89	2.905×10^5	5.81×10^3
400	TZ	2.992×10^{-1}	9.52×10^{-4}	2.74×10^5	11.61	3.008×10^5	6.02×10^3
220	Z	3.992×10^{-1}	12.70×10^{-4}	3.408×10^5	9.34	2.904×10^5	5.81×10^3
132	P	3.861×10^{-1}	12.28×10^{-4}	3.416×10^5	9.31	2.958×10^5	5.92×10^3

[a] 1 nF = 10^{-9} F

Note: The line parameters will vary with system voltage, configuration of line conductors and their spacing between themselves and the ground, tower configuration, etc.
Based on *Manual on Transmission Planning Criteria*, CEA (Central Electricity Authority)

excitation level below which the machine may be unstable.

Figure 24.9 shows a typical output characteristic or reactive capability curve of a generator, illustrating the stability levels of the machine under different conditions of operation. The machine must operate within these levels and the voltage profile within the specified voltage limits, as noted in Table 24.3.

Example 24.1
Consider a 400 kV, triple-Zebra line, having a distributed leakage capacitive reactance X_{CO} of 2.74×10^5 Ω/km from Table 24.1(b). Then the charging power per phase per km,

$$P_{CO} = \frac{V_1^2}{X_{CO}}$$

$$\therefore \quad P_{CO} = \frac{400^2}{2.74 \times 10^5}$$

$$= 0.584 \text{ MVAr/km}$$

(iii) *Voltage profile*

Since the charging current is capacitive in nature, the line voltage drop at the far end would raise the terminal voltage on a no-load as shown in Figure 24.10. The charging current and rise in terminal voltage both at no-load or during an underloading condition are undesirable.

Table 24.2 Typical basic line characteristics (approximate)

Nominal voltage, V_r	*Conductor type*	X_{LO}	X_{CO}	$\sqrt{Z_O} = \sqrt{X_{LO} \cdot X_{CO}}$	$P_O = \frac{V_r^2}{Z_O}$	I_l *at* P_O	*Charging current per km*	*Charging MVAr/km*	*Ferranti effect per km*	
						$= \frac{V_r}{\sqrt{3} \cdot Z_O}$	$I_O = \frac{V_r \cdot 1000}{\sqrt{3} \cdot X_{CO}}$	$= \frac{V_r^{2a}}{X_{CO}}$	$\theta_{rad} = \sqrt{\frac{X_{LO}}{X_{CO}}}$	$\theta_O^{b} = \frac{180}{\pi} \cdot \theta_{rad}$
kV (r.m.s.)		*Ω/km*	*Ω/km*	*Ω*	*MW*	*Amp*	*Amp*		*in radians*	*In degrees*
1	2	*3*	*4*	*5*	*6*	*7*	*8*	*9*	*10*	*11*
765	QB	2.619×10^{-1}	2.44×10^5	252.8	2315.0	1,747	1.81	2.40	1.036×10^{-3}	59.33×10^{-3}
400	TM	3.32×10^{-1}	2.88×10^5	309.22	517.4	747	0.80	0.56	1.074×10^{-3}	61.51×10^{-3}
400	TA	3.304×10^{-1}	2.82×10^5	305.24	524.2	757	0.82	0.567	1.082×10^{-3}	61.97×10^{-3}
400	QZ	2.544×10^{-1}	2.40×10^5	247.09	647.5	935	0.96	0.67	1.03×10^{-3}	58.99×10^{-3}
400	QA	2.682×10^{-1}	2.29×10^5	247.826	645.6	932	1.01	0.70	1.082×10^{-3}	61.97×10^{-3}
400	TZ	2.992×10^{-1}	2.74×10^5	286.32	558.9	807	0.84	0.584	1.045×10^{-3}	59.85×10^{-3}
220	Z	3.992×10^{-1}	3.408×10^5	368.846	131.2	344	0.37	0.142	1.082×10^{-3}	61.97×10^{-3}
132	P	3.861×10^{-1}	3.416×10^5	363.169	48.0	210	0.22	0.051	1.063×10^{-3}	60.88×10^{-3}

[a] Charging reactive power is proportional to V_r^2 and diminishes sharply at lower voltages. Charging reactive power must be suitably offset at the point of power generation to protect the generator and other connected equipment from excessive overvoltages due to capacitive charging.

[b] This reveals that on a 50 Hz system the phase displacement between the sending and receiving end voltages, due to electromagnetic propagation through the lines, is of the order of 6° per 100 km. Accordingly, an uncompensated line should be restricted to about 400 km in length in radial lines and 800 km in symmetrical lines to avoid an overvoltage at the receiving end (Table 24.5)

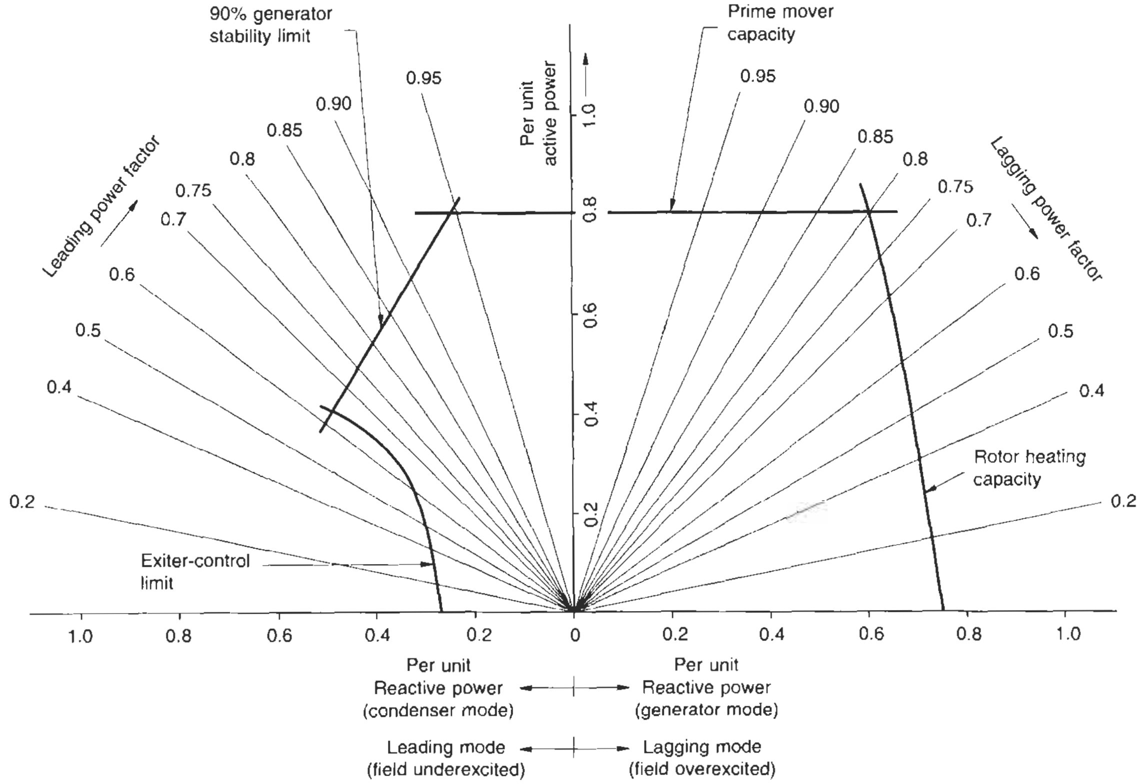

Figure 24.9 Normal characteristics of a generator, illustrating the stability levels (safe operating limits)

Table 24.3 Permissible voltage variations during temporary system disturbances

Nominal voltage V, kV(r.m.s.)	*Rated maximum stability level* kV(r.m.s.)[a]	*Rated minimum stability level* kV(r.m.s.)[b]
765	800	728
400	420	380
220	245	198
132	145	122

[a] As in IEC 60694

[b] As in *Manual on Transmission Planning Criteria*, CEA (Central Electricity Authority).

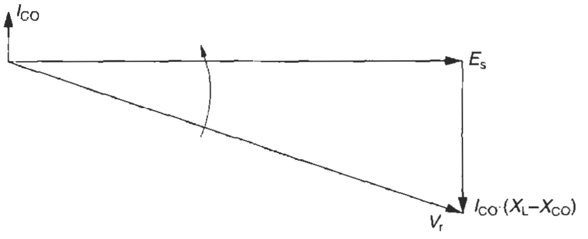

Figure 24.10 Receiving-end voltage rises on no-load

While the former would stress the generator windings, the latter may cause a voltage swing during a load rejection or load fluctuation and result in a line outage. These features, if not controlled, may render the system unstable. Overvoltages must therefore be controlled within an acceptable limit. Table 24.3 prescribes one such limit.

To achieve the above, the charging power must be compensated at the generating end itself, and this can be achieved through a reactive power control as illustrated in Figure 24.11. Figure 24.12 illustrates general voltage and charging current profiles before a compensation and Figure 24.13 a desirable flat voltage profile that can be achieved through a series compensation, discussed later.

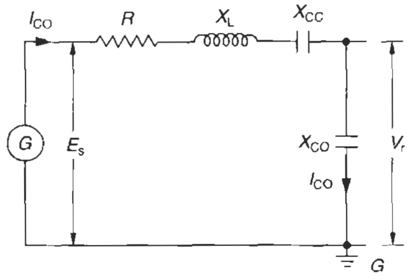

Figure 24.11 An open circuited series compensated transmission line

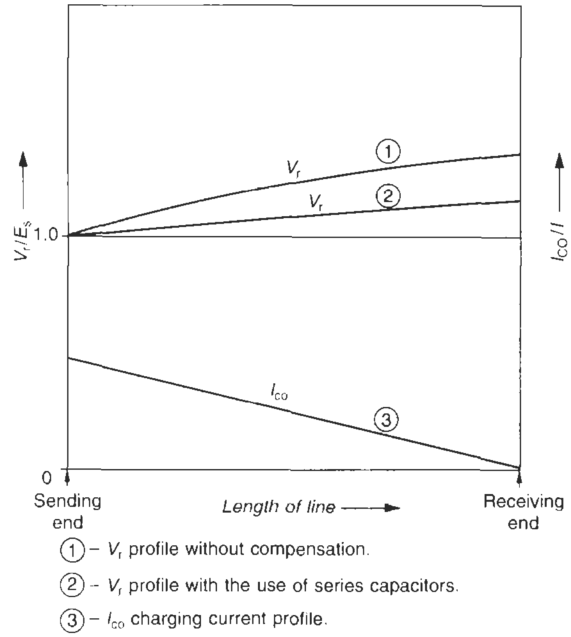

Figure 24.12 Voltage and current profiles when the line at the far end is open-circuited

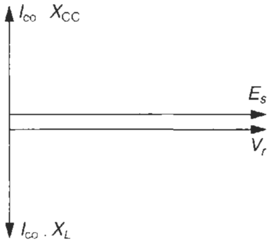

Figure 24.13 Receiving-end voltage is flattened with the use of series capacitors

24.6.3 Power transfer

It has been established that the active power transfer through a power system can be expressed by

$$P = \frac{E_S \cdot E_r}{Z_0 \cdot \sin\theta} \cdot \sin\delta \qquad (24.3)$$

The expression is free from p.f. A change in p.f. (cos ϕ), however, will adjust the torque angle, δ. The higher the p.f. (low ϕ), the, greater will be the torque angle δ and vice versa. For more details to arrive at the above derivation refer to the further reading at the end of the chapter.

Assumption – that the line is lossless, i.e. R_O is negligible.

where

P = power transfer from one end of the line to the receiving end per phase

E_s = phase voltage at the sending end

E_r = phase voltage at the receiving end in radial lines and mid-point voltage in symmetrical lines. (Symmetrical lines are those which are fed from both ends such as when the far end is connected to a power grid).

Z_0 = surge impedance of the line

$= \sqrt{\frac{L_0}{C_0}}$

= constant for a particular line, irrespective of its length, although L and C will rise with the line length ($L = \ell \,.\, L_0$ and $C = \ell \,.\, C_0$, if ℓ is the length of the line).

where L_0, C_0, and R_O are the line parameters, per phase per unit length. In our subsequent analysis, we have ignored R_O, being negligible. The standard line parameters are normally worked out for different system networks operative in a country by the power transmission and distribution authorities on the basis of conductor configuration, spacing between them and the ground. Typical data for a few voltage systems have been provided in Tables 24.1(a) and (b).

$\sin\theta$ = line length effect or Ferranti effect, discussed later

θ = In radial lines this is determined for the entire length of line while for symmetrical lines, it is calculated up to the mid-point, i.e. it refers to $\theta/2$.

δ = load angle or transmission angle. This is the torque angle between the receiving-end and transmitting-end voltages, and is responsible for the required power transfer from the transmitting end to the receiving-end.

Note
This should not be confused with $\Delta\theta$ as used in Section 16.10 in connection with the paralleling of two generators. There it represented the electrical shift between the rotors of the two machines or supply buses. If it is not eliminated, it will cause a circulating current between the two machines or the buses when running in parallel and will add to their heating.

For short lines say, 200–300 km, for a 50 Hz system

$\sin\theta \simeq \theta$ (in radians)

e.g. for a 250 km, 400 kV line, as considered earlier, from Table 24.2, for line type TZ,

$\theta = 59.85 \times 10^{-3}$ degree/km = 14.96° for 250 km

and $\sin\theta = 0.258$

In radians $\theta = \frac{\pi}{180} \cdot \theta = 1.045 \times 10^{-3}$ per km or 0.261 for 250 km (both are almost the same)

and $\theta = \frac{2\pi}{\lambda} \cdot \ell$ as in equation (24.6)

Then from equation (24.8) noted later,

$$Z_0 \sin\theta = \sqrt{\frac{L_o}{C_o}} \cdot 2\pi \cdot f \cdot \sqrt{L_o C_o} \cdot \ell$$

$$= L_o \cdot 2\pi f \cdot l$$

$= X_L$, i.e. the inductive reactance of the entire line length.

and equation (24.3) will become

$$P = \frac{E_s \cdot E_r}{X_L} \cdot \sin \delta \qquad (24.4)$$

For short lines, this is a very useful formula.

24.7 Influence of line length (Ferranti effect)

The velocity of propagation of electromagnetic waves and the line length have a great influence over the capacity of power transfer through a line under stable conditions and also define the quality of the receiving-end voltage. The electromagnetic waves (electricity) travel with great speed, close to the speed of light (Section 17.6.6) and hence have a very long wavelength. Since

$$\lambda = \frac{U}{f}$$

where

λ = wavelength in km

$$U = \frac{1}{\sqrt{L_o C_o}} \qquad (24.5)$$

= Velocity of propagation of electromagnetic waves $\simeq 3 \times 10^5$ km/s (more accurate values are determined in Table 24.1(b) for the line parameters considered).

The normal line lengths may vary from 200 km to 500 km. As a result, the electromagnetic wave is able to travel scarcely a small fraction of its one full wavelength, up to the far end of the line (Figure 24.14). The instantaneous voltage at the receiving-end therefore is never in phase with the voltage at the sending-end (Figure 24.15). This phase displacement, which is caused neither by the p.f. nor by the mechanical positioning of the rotor of the generator, or the bus to which the receiving end may be connected, is termed the Ferranti effect. It constrains the line length within certain limits to transmit power under stable conditions, as discussed later.

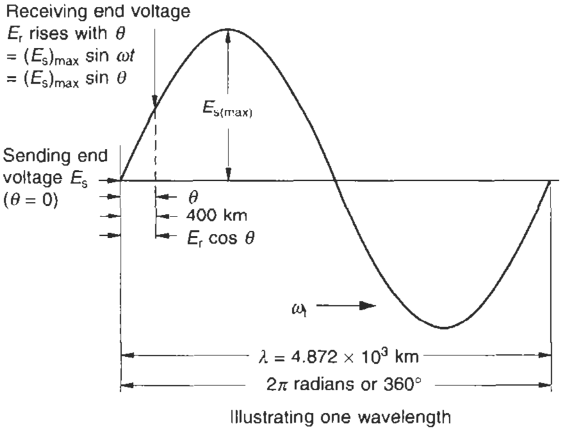

Figure 24.14 Phasor position of sending-end and receiving-end voltages in an overhead line

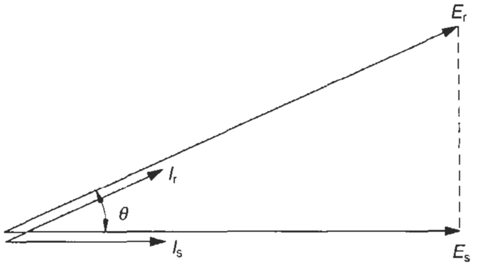

Figure 24.15 The line length effect even when the sending-end and receiving-end voltages and currents are maintained at unity p.f.

This phase shift (θ) for a particular line length can be calculated as follows:

$$\theta = \frac{2\pi}{\lambda} \cdot \ell \qquad (24.6)$$

where

θ = phase shift between the transmitting-end and the receiving-end voltages, in radians or degrees, depending upon the value of π considered, i.e.

$\pi = \frac{22}{7}$ or 180° respectively.

ℓ = line length in km. For the various HV and EHV networks and their line parameters considered, θ is calculated in Table 24.2

and the voltage at the receiving-end, when it is open-circuited,

$E_r \cos \theta = E_s$ (Figure 24.15)

$$\text{Or} \quad E_r = \frac{E_s}{\cos \theta} \qquad (24.7)$$

For the 400 kV, *TZ* line considered above, E_r, for a 400 km line length,

$$\theta = 400 \times 59.85 \times 10^{-3} = 23.94°.$$

$$\therefore E_r = \frac{E_s}{\cos 23.94°}$$

$$= 1.094\ E_s$$

The Ferranti effect therefore, raises the receiving-end voltage and becomes a potential cause of increased voltage fluctuations when existing in the system, similar to a capacitor magnifying the harmonic quantities. The longer the line, the higher will be the voltage rise at the receiving-end. This will cause wider voltage fluctuations during load variations, particularly during light loads and load rejections. Beyond a certain line length, this effect may even render the line unsuitable for the safe transmission of power. For very short lines, however, the effect may be negligible and may be ignored. The line length is therefore chosen so that the receiving-end voltage is maintained within the permissible limits under all conditions of its far-end loading. Thus the receiving-end voltage is influenced by three factors:

- The line distributed parameters L_0 and C_0
- The Ferranti effect due to C_0 and
- The p.f. of the far-end load.

The effect of p.f. can be controlled by shunt capacitors, near the load point and the Ferranti effect by altering the line parameters. Since

$$\begin{aligned} \theta &= \frac{2\pi}{\lambda} \cdot \ell \\ &= \frac{2\pi f}{U} \cdot \ell \\ &= 2\pi f \sqrt{L_0 C_0} \cdot \ell \qquad (24.8) \end{aligned}$$

or $\theta \propto \sqrt{LC}$

where
$L = L_0 \cdot \ell$ and
$C = C_0 \cdot \ell$

Note
Generally, an HT distribution network has a very short length (ℓ), less than 10–15 km. Moreover, the leakage capacitance (C_0) for system voltages up to 66 kV is almost negligible. The Ferranti effect is therefore not applicable to a distribution network.

For the same system frequency, the Ferranti effect can be reduced by

- Sectioning or sin δ effect: Line length compensation can be achieved by sectioning, i.e. by dividing the line into two or more sections. This method indirectly reduces the physical length of line (ℓ). Each section now operates as an independent line and is compensated through shunt capacitors controlling the voltage within the required limits, at all such sections since

  $$P = \frac{E_s \cdot E_r}{Z \cdot \sin\theta} \cdot \sin\delta$$

  Maximum power transfer is possible when $\delta = 90°$. If the line is compensated, say, at the midpoint, as shown in Figure 24.16(a), then the maximum power transfer will improve to

  $$P_m = \frac{E_s \cdot E_m}{\frac{Z}{2} \cdot \sin\frac{\theta}{2}} \cdot \sin\frac{\delta}{2}$$

  where P_m = compensated power transfer at the midpoint.

  $E_s = E_m = V_m$, which is the mid point voltage and is held constant

  Z_m, θ_m and δ_m are midpoint parameters and

  $Z_m = Z/2$

  $\theta_m = \theta/2$

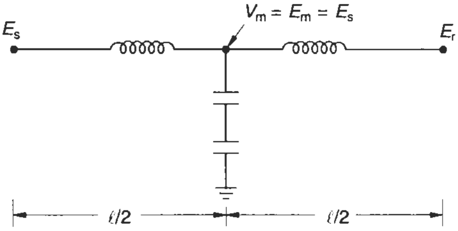

Figure 24.16(a) Series compensation by sectioning at the midpoint of the line

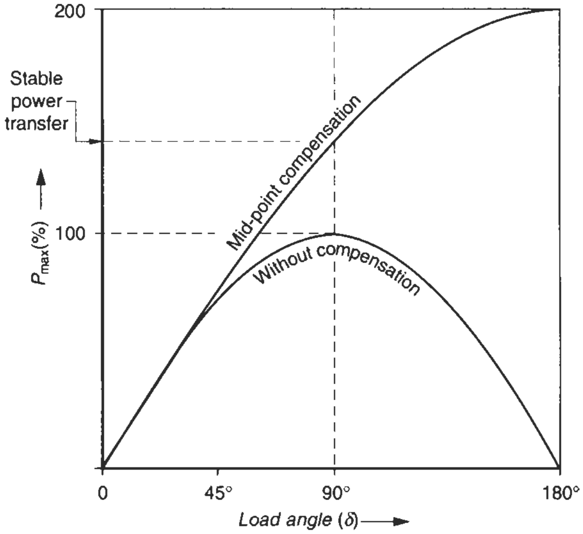

Figure 24.16(b) Rise in power transfer with mid-point compensation

  $\delta_m = \delta/2$

  $$\therefore\ P_m = \frac{2 \cdot V_m^2}{Z \cdot \sin\frac{\theta}{2}} \cdot \sin\frac{\delta}{2}$$

  $$= 2 \cdot P_{max} \cdot \sin\frac{\delta}{2}$$

  Maximum power is doubled by a midpoint compensation and occurs at $\delta = 180°$, as shown in Figure 24.16(b). Thus by changing the location of the shunt compensation the utilization capacity of the line can be altered. For a midpoint compensation, the line can operate stably up to $\delta/2$ or so, i.e. at about 90°.

  This is a costly and cumbersome solution, and may be resorted to where series compensation is not possible. But such a situation will seldom arise. Power is rarely transported over very long distances and through radial lines. A transmission line is normally symmetrical, as its far end will generally be connected to a power grid at less than 1000 km or so. However, if such a situation arises, sectioning would be one viable solution.
- Reducing the electrical line length by reducing the product $\sqrt{LC}$ (equation (24.8)).

$$L = \frac{X_L}{2\pi \cdot f}$$

$$C = \frac{1}{2\pi \cdot f \cdot X_C}$$

$$\therefore \sqrt{LC} = \frac{1}{2\pi \cdot f} \sqrt{\frac{X_L}{X_C}}$$

This product can be reduced by reducing X_L, using series capacitance with a reactance X'_C, which will reduce X_L to $X_L - X'_C$. This is where reactive control plays a major role. By meticulous reactive power manage-ment, the Ferranti effect can be controlled and the electrical line length increased to the desired level. It is a different matter that the electrical length of the line cannot be raised infinitely, for reasons of stability, as discussed later.

To apply the corrective measures to limit the Ferranti effect it is essential to first study its over voltage (OV) status at the far end of the line. Consider the earlier system *TZ* of 400 kV 50 Hz and draw a voltage profile as illustrated in Figure 24.17, for the voltages worked out as in equation (24.7), at different lengths of the line. The voltages, for the sake of simplicity, are also shown in Table 24.4.

Table 24.4 Far-end voltage, due to the Ferranti effect, in a 400 kV TZ type line, at different line lengths

Line km	*θ from equation (24.6) and Table 24.2*	*cos θ*	$V_r = \frac{E_s}{\cos\theta}$ *in % of* E_s
100	5.985°	0.995	100.5
200	11.97°	0.978	102.2
250	14.96°	0.966	103.5
300	17.955°	0.951	105.1
400	23.94°	0.914	109.4

From the voltage profile it is evident that up to a line length of almost 250 km the overvoltage at the far end is quite acceptable. For greater lengths than this, the far-end open-circuit voltage will rise beyond acceptable limits and may damage the line insulators and the terminal equipment. Moreover, during a line disturbance or load variation this voltage fluctuation may assume more dangerous swings. Generally, a transmission line is connected through a power grid where more than one supply source may be feeding the system. When this is so, lines are called symmetrical as they are fed equally from both ends. The far end point shifts automatically to the middle of the line, diminishing the Ferranti effect, doubling the electrical line length. (Figure 24.18). In other words, such lines can automatically transmit power, within permissible parameters, up to twice the length of a radial line, which is fed from only one end. In such cases, it is only the midpoint voltage that is more relevant and must be considered for the purpose of Ferranti effect.

In the first case, if we had considered a safe line length of 250 km, this would become 500 km for a symmetrical line. Figure 24.18 illustrates such a condition. Depending upon the length and type of line, a line length compensation may be required. Most transmission lines are seen to be within permissible lengths and only a few may require such a compensation. Nevertheless, it may be worth reducing the phase displacement between E_r and E_s to less than 15° electrical, to further improve the quality and stability level of power transmission.

24.8 Optimizing power transfer through reactive control

To transmit power over long distances is the basic requisite of economical transmission. Let us study equation (24.3). If we are able to maintain a unity p.f. between the transmitting and receiving ends, then for a lossless line

$E_s = E_r = V_O$

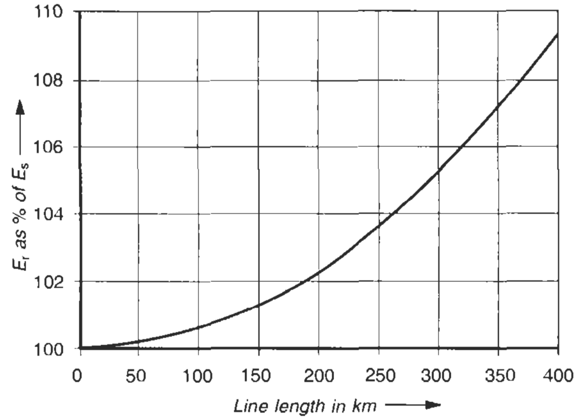

Figure 24.17 Voltage profile of a 400 kV/400 km radial line on a no-load illustrating the Ferranti effect

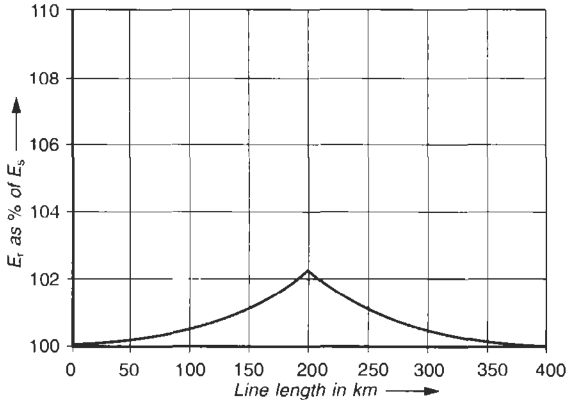

Figure 24.18 Voltage profile of a 400 kV/400 km symmetrical line on a no-load illustrating the Ferranti effect

Under such a condition, the line will maintain a unity p.f. at all points of the line and the reactive power generated, due to the distributed line charging capacitances (C_o), is offset by the reactive power absorbed by the distributed line inductances (L_o). The generator is now not unduly stressed by the reactive power feedback, i.e.

$$\frac{V_O^2}{X_{CO}} = I_O^2 \cdot X_{LO}$$

where reactive power generated = V_O^2/X_{CO} per phase per unit length and reactive power compensated (absorbed) = $I_O^2 \cdot X_{LO}$ per phase per unit length. I_O is the capacitive charging current

$$\text{or} \quad \frac{V_O}{I_O} = \sqrt{X_{CO} \cdot X_{LO}}$$

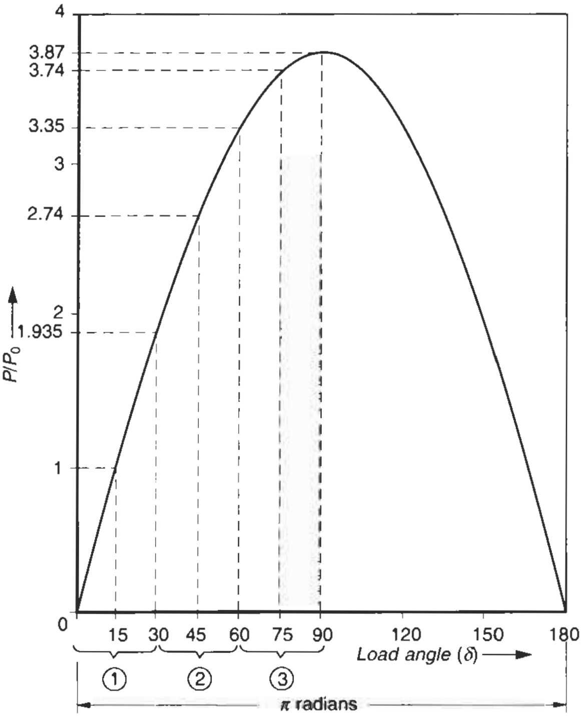

P/P_0, considered for a 250 km radial line length as per Table 24.5.

δ	$P/P_0 = 3.87 \sin \delta$	Stability level
0	0	① Stable region
15	1.000	
30	1.935	
45	2.740	② Stable when series compensated
60	3.350	③ Not so stable on severe line disturbances, even after a series compensation
75	3.740	
90	3.870	

Figure 24.19 Variation in load transfer with change in transmission angle δ

$$= \sqrt{\frac{1}{2\pi \cdot f \cdot C_O} \cdot 2\pi \cdot f \cdot L_O}$$

$$= \sqrt{\frac{L_O}{C_O}} = Z_O \; (Z_O \text{ is termed the natural or surge impedance of the line})$$

The voltage will now maintain a flat profile from the transmitting end through the receiving end and all the insulators or terminal equipment would be equally stressed.

If V_O is considered as the nominal phase voltage of the system then equation (24.3) can be rewritten as

$$P = \frac{V_O^2}{Z_O} \cdot \frac{\sin \delta}{\sin \theta} \text{ per phase} \qquad (24.9)$$

The concept behind the above equation is that the voltages and the currents, at the transmitting and receiving ends are maintained at the same p.f. The voltage at the receiving end, however, will shift in phase with respect to the voltage at the transmitting end by an angle θ, due to the Ferranti effect and that effect is considered in the above derivation. Refer to Figure 24.15 for more clarity. In the above equation the element V_O^2/Z_O is an important indicator of the power transfer capability of a line, and is termed the natural loading or surge impedance loading (P_O) of the line, i.e.

$$P_O = \frac{V_O^2}{Z_O} \text{ per phase} \qquad (24.10)$$

Such a line is said to be naturally loaded and this assumption is true only when the power is being transmitted at unity p.f. and there is a total balancing of reactive powers. Since Z_O is constant for an uncompensated line, so is P_O, irrespective of its length. The magnitude of this will depend upon the line voltage, size of conductors and the spacings between them and from the ground (these parameters decide C_O and L_O and hence Z_O). It is also an indicator of a normal loading capacity of a line. The recommended practice is to load an uncompensated line to near this value or a little above when the line is a little shorter, or a little less when the line is longer to retain the level of stability. Also refer to the load curves in Figure 24.20 for more clarity.

To optimize this power transfer through reactive control let us study equation (24.10) for the parameters that can be varied to achieve this objective. The active power transfer will depend upon the following factors:

- Nominal voltage of transmission (V_O) is a policy decision of a country, depending upon the likely power loading of such lines and future power plans. Generally, the levels of voltage, V_r, for primary and secondary transmissions are gradually increasing to cope with growing power demands. A typical system of transmission and distribution is illustrated in Figure 23.1.
- Load to be transferred, keeping suitable margins for a future increase in demand.
- Likely expected load variations and p.f. of the load (which may be based on experience).

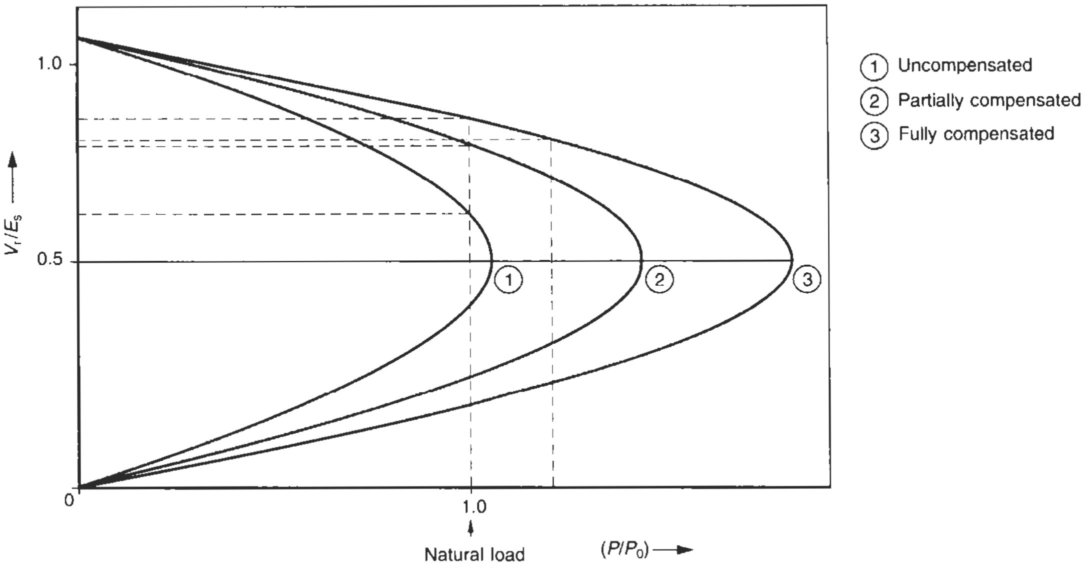

Figure 24.20 Capacity utilization load curves with and without compensation

- Line length effect or Ferranti effect, sin θ, that will determine the optimum line length which will also depend upon whether it is a radial or a symmetrical line.
- Surge impedance of the line, Z_0.
- Angle of transmission, δ.

Equation (24.3) defines the active power as independent of p.f. However, depending upon the p.f. of the load, this will adjust the load angle δ. The larger the angle of transmission, the higher will be the power transfer. Figure 24.19 illustrates the power transfer characteristics of a 250 km line selected from Table 24.5.

Rewriting equation (24.9),

$$P = \frac{P_0}{\sin\theta} \cdot \sin\delta \tag{24.11}$$

For the system to remain stable under all conditions of loading, switching, or any other line disturbances it is essential that an uncompensated line is loaded at much below this level. Otherwise disturbances of a minor nature may result in undampened oscillations, and may even swing the receiving-end voltage beyond acceptable limits. It may even cause an outage of the system. It is therefore not practicable to operate an uncompensated line to its optimum level. For this we will analyse this equation for sin θ and sin δ as follows.

24.8.1 Line length effect (sin θ)

The element $P_0/\sin\theta$ can be considered as the steady-state stability limit of the line, say $P_{\max}$. A line length compensation can improve the voltage profile and hence the power transfer capability of the line as follows.

Figure 24.20 illustrates three power transfer or load curves:

Curve 1: without any compensation, the voltage profile sags on small load variations and is not capable of transferring even a natural load.
Curve 2: with partial compensation, the voltage profile improves and the line is able to transfer more load than above, but less than its natural loading. Voltage still sags but the swing is more tolerable.
Curve 3: The line is fully compensated. The voltage profile tends to be flat and the line is capable of transferring even more than the natural load without an appreciable sag in the voltage profile.

24.8.2 Influence of load angle (sin δ)

A study of various systems has revealed that the load angle for an uncompensated line should be maintained at about 30° only. This means that an uncompensated line may be loaded to just nearly half its steady-state level to retain a high level of stability during load fluctuations, particularly during light loads or load rejections, switching of large inductive loads or any type of minor or major line fault.

When the line is compensated, and a near-flat voltage profile can be ensured so that during all such disturbances the receiving-end voltage will stay within permissible limits, the load angle can be raised to 45–60° to achieve a high power transfer.

Of all the above parameters, system voltage is already predefined and considering that it cannot be changed, the only parameters that can be altered to optimize P are Z_0 and θ. Both parameters can be altered to any desired limit with the application of reactive power controls, subject to

- The thermal capacity of the line conductors and
- Retaining the stability limit of the system thus modified.

After we have assessed the optimum power level it becomes easy to decide the type and amount of reactive power control required to achieve this level, assuming that the lines can be loaded up to their thermal capacity and the optimum power derived above can be attained.

Our main objective will now be to arrive at the stability level of the system and the parameters that define this. As noted above, the stability level defines the maximum power that can be transferred through a line without causing a voltage fluctuation and angular difference beyond acceptable limits, or a consequent outage of the line, during a load variation, or a temporary line disturbance. It should, in fact, maintain its continuity even during a fast clearing of a major fault. To determine the effects of Z_0 and θ on the receiving-end voltage and consequently the transfer of power, P, within stable limits we will study the voltage equation of a lossless transmission line (considering $R_o = 0$, for an easy illustration), feeding a load P at a p.f. cos ϕ.

Radial lines

The transmitting-end voltage in terms of line parameters can be represented by

$$E_S = V_r \cos \theta_r + JZ_0 \cdot I_1 \cdot \sin \theta_r \qquad (24.12)$$

where

E_s = phase voltage at the transmitting-end

V_r = phase voltage at the receiving-end

θ_r = line length effect or Ferranti effect at the end of the line, in degrees

I_1 = load current

$= \dfrac{P - JQ}{V_r}$

P = active load

Q = reactive load

R_o = line resistance per phase. It has been ignored and the line is considered lossless

Z_o = surge impedance of the line

The voltage stability of a system is the measure of voltage fluctuations which must remain within permissible limits during load fluctuation or rejection or other line disturbances and even temporary faults. We may therefore solve the above equation for V_r and P, to study the behaviour of the system under varying load conditions, P. As there are two more variables, load p.f. and the line length, which will influence P and V_r, different sets of load curves can be drawn as illustrated in Figure 24.21, for different line lengths at different p.f.s (at near unity, to obtain the best performance). From a study of these curves one can identify the most appropriate line lengths which can extend the highest level of stability to the system. For example, set '*a*' of curves are more ideal compared to set '*b*', which correspond to very long line lengths, compared to the ideal line lengths of set '*a*'.

After identifying the likely line lengths we can then study the most appropriate p.f. at which the load must be transmitted to maintain the highest level of stability. For our purpose, parts of the curves that lie near the rated voltage, say, within $V_r \pm 5\%$, alone are relevant for study. The line will perform best at p.f.s very near unity and cause the least possible voltage fluctuations by maintaining a near-flat voltage profile over reasonable variations of load. Leading p.f.s are not considered for reasons of capacitive overvoltages. The p.f. of the load can be improved by applying shunt capacitors near the load points, as discussed above.

Inference

The voltage stability level diminishes with an increase in the line length. For very long line lengths, the far-end voltage may swing from high to very high values during load variations, rendering it unsuitable for operation near the maximum load transfer level. During light loads too the steeply rising voltage profile may cause a high-voltage swing on a small load variation. A load variation therefore will cause wide to very wide voltage fluctuations and render the system unsuitable rather than unstable for a power transfer near the required level. For transfer of a load under stable conditions the line lengths of the uncompensated lines will be too short and hence will not be economically viable. We will seek a solution to these problems with the help of these curves which will provide an introduction to the utility of reactive power controls to improve the power transmission capacity of a line and its quality through the following discussion.

Influence of PF

- The power transfer capability of the line rises as the p.f. swings towards the leading region and diminishes as it swings towards the lagging region. Since a power supply system is not run at leading p.f.s for reasons of dangerous overvoltages that may develop (as a result of overexcitation of the capacitors, Section 23.13) across the terminal equipment it is advisable to run the system as close to unity p.f. as possible. Moreover, the field system of the generating machines is also designed for maximum operation at lagging p.f.s only, as discussed in Section 16.4. At leading p.f.s (after a certain limit) there is a possibility of its field system losing control and becoming ineffective.
- The receiving-end voltage rises with leading p.f.s and droops with lagging. This is illustrated with the help of phasor diagrams (Figures 24.22(a) and (b).
- At unity p.f. the voltage variation and hence the regulation is the least and maintains a near-flat voltage profile. This is the best condition to provide the highest level of system stability from a voltage point of view.

The power factor can be improved with the use of shunt capacitors at the load points or at the receiving end, as discussed above. It is not practical to have a near-fixed loading for all hours of the day. Moreover, there may also be seasonal loads which may upset the parameters considered while installing the capacitor banks. In such conditions the system may therefore have to be underutilized or run under a high risk of instability during

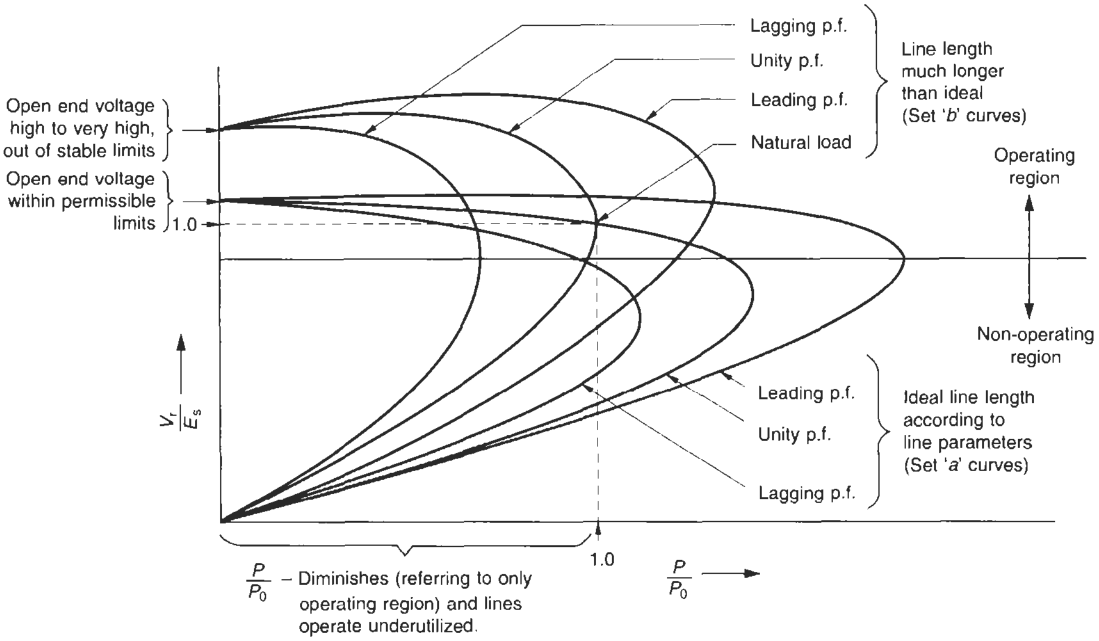

Figure 24.21 A comparative study of load transfers for different line lengths at different p.fs. for an uncompensated line

adverse load conditions, particularly when the p.f. falls too low. Such a situation can be overcome by readjusting the reactive needs of the line by providing switched capacitor banks a few of which can be switched-in or switched-out, depending upon the load demand. The switching may be manual or automatic with the help of a p.f. correction relay (Section 23.15). The latter is always recommended.

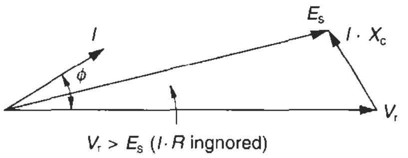

(a) Receiving–end voltage rises with leading p.f's

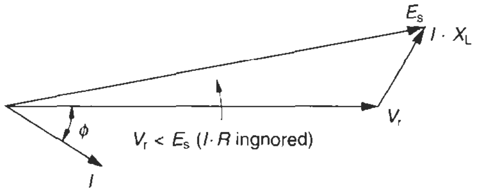

(b) Receiving–end voltage diminishes with lagging p.f's

Figure 24.22

Influence of line length (Ferranti effect)

For each p.f. and line length the curve V_r versus P describes a certain trajectory. Maximum power can be transferred only within these trajectories. Each line length has a theoretical optimum level of power transfer, P_{max}, which is defined by $P_0/\sin\theta$. In Table 24.5 we have worked out these levels for different line lengths, for the system considered in Example 24.1.

A line can be theoretically loaded up to these levels. But at these levels, during a load variation, the far-end voltage may swing far beyond the desirable limits of V_r ± 5% and the system may not remain stable. With the use of reactive control it is possible to transfer power at the optimum level (P_{max}) and yet maintain the far-end (or midpoint in symmetrical lines) voltage near to V_r and also to have a near-flat voltage profile.

Reactive control can alter the line length ($\propto \sqrt{LC}$) to the level at which the system will have the least possible swings. It is evident from these curves that an uncompensated line of a much shorter length may not be able, to transfer even its natural load (P_0) successfully. This is due to the steeply drooping characteristics of the voltage profile at about this load point, which may subject the system to a much higher voltage swing than is desirable on small fluctuation of loads.

To decide on the best reactive control one should choose the most appropriate electrical line length from the load characteristics drawn already. Choose the one that can transmit the optimum power, and then compensate this to obtain the required line length. For the 400 kV, 50 Hz system considered, we can choose a radial line with an electrical line length of 200–250 km. The compensation is provided so that the P_{max} point, which lies far from the natural power transmission point P_0, shifts within a stable region, i.e. near the P_0 region. Then from equation (24.8),

$$\theta \propto \sqrt{L.C.}\ l$$

Say, for an actual line length of 800 km (symmetrical),

$$\theta_{400} \propto \sqrt{L'_O \cdot C'_O} \times 400 \ (\theta_{400} = \text{midpoint Ferranti effect})$$

which must be improved for, say, a 250 km radial line

$$\text{i.e. } \theta_{250} \propto \sqrt{L_O \cdot C_O} \times 250$$

for θ_{400} to be almost equal to θ_{250},

$$\sqrt{L'_O \cdot C'_O} \times 400 = \sqrt{L_O \cdot C_O} \times 250$$

$$\text{or} \qquad L'_o C'_o = \left(\frac{250}{400}\right)^2 \cdot L_o \cdot C_o$$

$$\text{or} \qquad \frac{X'_{LO}}{X'_{CO}} = \left(\frac{250}{400}\right)^2 \frac{X_{LO}}{X_{CO}}$$

Since a shunt compensation will reduce X_C ($\propto 1/c$), it will not provide the desired compensation. This can be achieved with the use of series compensation, C_o remaining the same. Then

$$X'_{LO} = \left(\frac{250}{400}\right)^2 \cdot X_{LO}$$

$$= 0.39 \cdot X_{LO}$$

$\therefore$ Compensation required = 0.61 X_{LO} per unit length. Series capacitors making up 0.61 $X_{LO} \cdot \ell$ may be introduced into the system to achieve the desired electrical line length.

Influence of surge impedance (Z_o)

$$\text{Since } P_O \propto \frac{1}{Z_o}$$

Z_o plays a very significant role in the power transfer capability of a line. By reducing the value of Z_o, the power transfer capability of a system can be increased. Since

$$Z_o = \frac{l_o}{C_o}$$

$$\text{and in absolute terms } = \sqrt{X_{LO} \cdot X_{CO}}$$

$$\text{or} \qquad = \sqrt{X_L \cdot X_C}$$

This value can be reduced by decreasing the value of X_L, which is possible by providing series capacitors in the line. If X_{CC} is the series compensation, then the modified impedance

$$Z'_O = \sqrt{(X_L - X_{CC}) \cdot X_C}$$

and hence any value of power transfer can be achieved up to the theoretical P_{max} (Table 24.5). But for reasons of other parameters that may also influence the stability of the system, it is not practical to achieve the optimum capacity utilization of the line without sacrificing the level of stability, even when the required degree of compensation is provided. Parameters that may influence the stability can be one or more of the following:

1. A small value of $(X_L - X_{CC})$, i.e. X_{CC} approaching X_L, will have more chance of a sub-synchronous resonance (SSR) with the rotating machines and a ferro-resonance with the transformers during a switching sequence or line disturbance.
2. Higher harmonic contents may magnify the harmonic currents and affect the loading capacity of the line.
3. A very close compensation, i.e., a low $X_L - X_{CC}$, may also raise the fault level of the system beyond acceptable limits.

To overcome such situations within acceptable parameters during normal operation, it has been found that an ideal series compensation is achieved at around 40–70% of X_L, preferably in the range of 45–60% only. The level of compensation will depend upon the expected load fluctuations and the presence of harmonic disorders in the system.

Example 24.2

Consider the 400 kV, 50 Hz system and apply the above theory. If the system has relatively fewer load fluctuations and the loads are reasonably linear, then we can consider a higher compensation to the extent of, say 75% of X_L. Then

$$P_O = \frac{V_r^2}{Z_o} \text{ and}$$

$$P_{max} = \frac{V_r^2}{Z'_o}$$

Table 24.5 Level of P_{max} for a 400 kV, 50 Hz, TZ system

Line length		*θ from equation (24.6)*	*sin θ*	$\frac{P_{max}}{P_O} = \frac{1}{\sin\theta}$	$V_r/E_s = \frac{1}{\cos\theta}$ %
Radial line km	*Symmetrical line km*				
100	200	5.985°	0.104	9.61	100.5
200	400	11.97°	0.207	4.83	102.2
250	500	14.96°	0.258	3.87	103.5
300	600	17.955°	0.308	3.25	105.1
400	800	23.94°	0.406	2.46	109.4

Note: Normal practice is to design a system to carry at least its natural load, P_o, under stable conditions.

or $$P_{\max} = P_o \times \frac{Z_o}{Z_o'} = P_o \sqrt{\frac{X_L \cdot X_C}{(X_L - 0.75\,X_L) \cdot X_C'}}$$

Since there is no change in the shunt capacitance ($X_C' = X_C$),

$$\therefore\ P_{\max} = P_o \times \sqrt{\frac{1}{0.25}} = 2\,P_o$$

While it is possible that $P_{\max}$ may be further raised by a still closer compensation, this is not advisable to retain the stability level of the system. The above compensation is even higher than the line length compensation considered earlier and will further improve the electrical line length.

Adding shunt capacitors would also reduce Z_o but would raise the electrical line length; hence it is not considered. Moreover, on EHVs, the charging shunt capacitances, C_o, as such require compensation during light loads or load rejections to limit the voltage rise (regulation) at the far end or the midpoint. Hence no additional shunt compensation is recommended.

Note
Series compensation would mean a low value of Z_o and hence a higher system fault level. This needs be kept in mind while designing the system and selecting the switching devices or deciding on the protective scheme or its fault setting.

Symmetrical lines

Equation (24.12) is now modified to

$$E_s = V_m \cdot \cos \theta_m + JZ_o \cdot I_l \cdot \sin \theta_m \qquad (24.13)$$

where
V_m = voltage at the midpoint of the line (Figure 24.18)
θ_m = line length or Ferranti effect up to the midpoint of the line.

The rest of the procedure, even the inferences drawn above, would remain the same as for a radial line. The only difference now is that the system would become suitable for twice the lengths of the radial lines as a result of the midpoint effect which doubles the line length.

Conclusion

A compensated line can transmit much more power than its natural loading within stable limits and hence fulfil the requirement of economical power transfer. The above was a theoretical analysis which can provide quite accurate results, depending upon the accuracy of the data assumed. The more scientific procedure to conduct this type of study, however, would be through a load flow analysis of the steady-state component to study temporary overvoltages and transient analysis through a TNA (transient network analyser) or an EMTP (electromagnetic transient programme). TNA is an analogue method while EMTP is a digital method of system analysis. For details of system models and procedure to study a system, refer to Miller (1982).

A transmission line may have to operate under different conditions of loading (I_l and p.f.) at different hours of the day, and then there may also be seasonal loads. The type of reactive compensation therefore must be decided for the varying load conditions, so that they are able to provide a continuous change in the VAr as demanded. It is normal practice to have a combination of series and shunt reactive compensations to suit all conditions of loading, some fixed (unswitched) compensators for normal load conditions and the remainder variable, to switch ON or OFF depending upon the load conditions or load fluctuations. The choice of different types of reactive compensators may be considered on the following basis:

1 **Shunt reactors** These are provided as shown in Figure 24.23 to compensate for the distributed lumped capacitances, C_o, on EHV networks and also to limit temporary overvoltages caused during a load rejection, followed by a ground fault or a phase fault within the prescribed steady-state voltage limits, as noted in Table 24.3. They absorb reactive power to offset the charging power demand of EHV lines (Table 24.2, column 9). The selection of a reactor can be made on the basis of the duty it has to perform and the compensation required. Some of the different types of reactors and their characteristics are described in Chapter 27.

Reactors add to Z_O ($Z_O = \sqrt{X_{LO} \cdot X_{CO}}$) and hence reduce surge impedance loading (SIL), P_O. But most are the fixed type, depending upon the maximum load

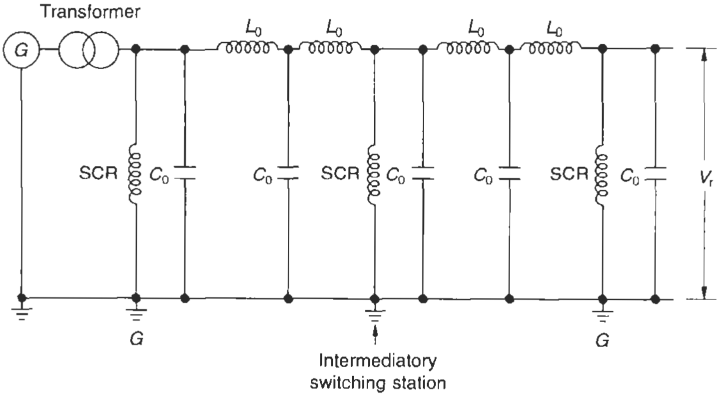

SCR – Shunt compensating reactor

Figure 24.23 A shunt compensated transmission line conditions, and the remainder are switched. Moreover, switchable reactors are switched only during a temporary disturbance, therefore they have no adverse effect on P_O. Ideally they can be made fixed to compensate 50–60% of C_0 and the remainder switched in a few steps. The size and number of steps will depend upon the likely underloading, open-circuiting during offpeak periods or other temporary disturbances. The overvoltages that may occur under such conditions, and which must be controlled through these reactors, is a matter of system design practice adopted by a country or its central power authorities and may be broadly based on our discussions in Section 24.6 and Table 24.3. To determine more accurate overvoltage conditions, however, a TNA or EMTP study would be better for an existing system and earlier data and experience for a new system.

Note

On 132 kV networks the MVAr loading is light, as most of the p.f. is controlled at the distribution level and the capacitive charging MVAr demand is low (Table 24.2, column 9). The charging MVAr is normally not compensated because, on load, more than this is offset by the load p.f.

2 **Shunt capacitors** These are used to supplement the natural line capacitance, C_0, under heavy inductive loading depending upon the system voltage, but are used generally for p.f. improvement of the system, where the natural C_0 is not sufficient to maintain the line p.f. They reduce Z_0 and enhance SIL, P_0, and boost the line voltage. They are normally switched and not permanently connected to avoid resonance on load rejection or an open circuit. Generally they are used for systems up to 33 kV, i.e. at the distribution end. But when the p.f. is not fully compensated at the distribution end it can be compensated at the secondary transmission level of 66 kV or 132 kV. Capacitors at such voltages may be connected through dedicated transformers, as illustrated in Figure 24.24.

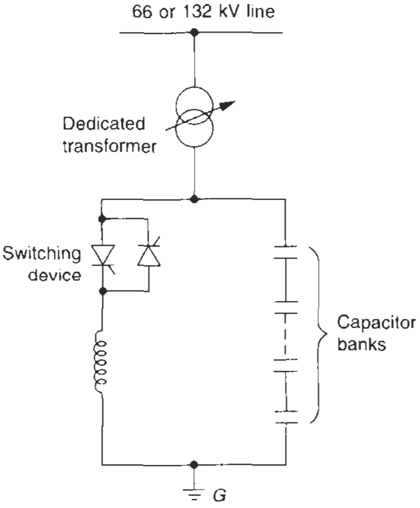

Figure 24.24 Use of dedicated transformer to connect capacitors on networks 66 kV and above

Note

On 66 kV networks the MVAr loading is normally high and therefore one practice is to install MVAr meters and adopt a manual switching during variation of MVAr beyond the permissible level, purely as a cost consideration.

3 **Series capacitors** These are used for line length compensation to help transmit power over long distances and also improve the stability level of the network. They are usually installed at the line ends or at the selected locations. They reduce Z_O and enhance SIL, P_O, and boost the receiving-end voltage.

Example 24.3 Application of series compensation on an HT distribution network

Let us consider the primary distribution network of Example 23.2 as shown in Figure 24.25(a) feeding an LT load of 29.4 MW at 0.98 p.f. through a 33/0.4 kV transformer. The following line parameters have been considered:

Resistance of primary distribution overhead lines, section B–B at the operating temperature,

$R_o = 0.13\ \Omega$/km per phase

Inductive reactance of this section at 50 Hz

$X_{LO} = 0.4\ \Omega$/km per phase

There is no leakage capacitance, C_o, and hence no Ferranti effect on such low voltages. We will use series compensation to reduce the line voltage drop and improve the regulation and hence the stability of the network as well as its load transfer capability,

Load p.f. = 0.98 ($\angle -11.48°$)

In Example 23.2 the system was not capable of transmitting its full capacity. Let us consider that with the use of series compensation it can be fully loaded up to

30 MVA × 0.98 = 29.4 MW.

The impedance of the transformer

$$Z = \frac{Z_p}{100} \times \frac{V_r^2}{\text{kVA} \times 10^3} \qquad \text{(from equation (13.3))}$$

$$= \frac{10}{100} \times \frac{33^2 \times 10^6}{30 \times 10^6}$$

$$= 3.63\ \Omega$$

For ease of calculation, let us consider the impedance of the transformer as its leakage reactance, ignoring resistance and draw an equivalent circuit diagram as in Figures 24.25 (b) and (c). Assuming the length of the primary distribution line to be 15 km, the total line parameters will become

$$X_L = 3.63 + 15 \times 0.4 + 3.63$$

$$= 13.26\ \Omega$$

and

$$R = 0.13 \times 15$$

$$= 1.95\ \Omega$$

Receiving-end voltage before series compensation

To study the voltage fluctuation at the receiving-end with fluctuations of loads, let us do so in terms of variation in the transmitting-end voltage, assuming the receiving-end voltage remains constant at 33 kV. We are doing this for ease of calculation and for drawing the phasor diagram.

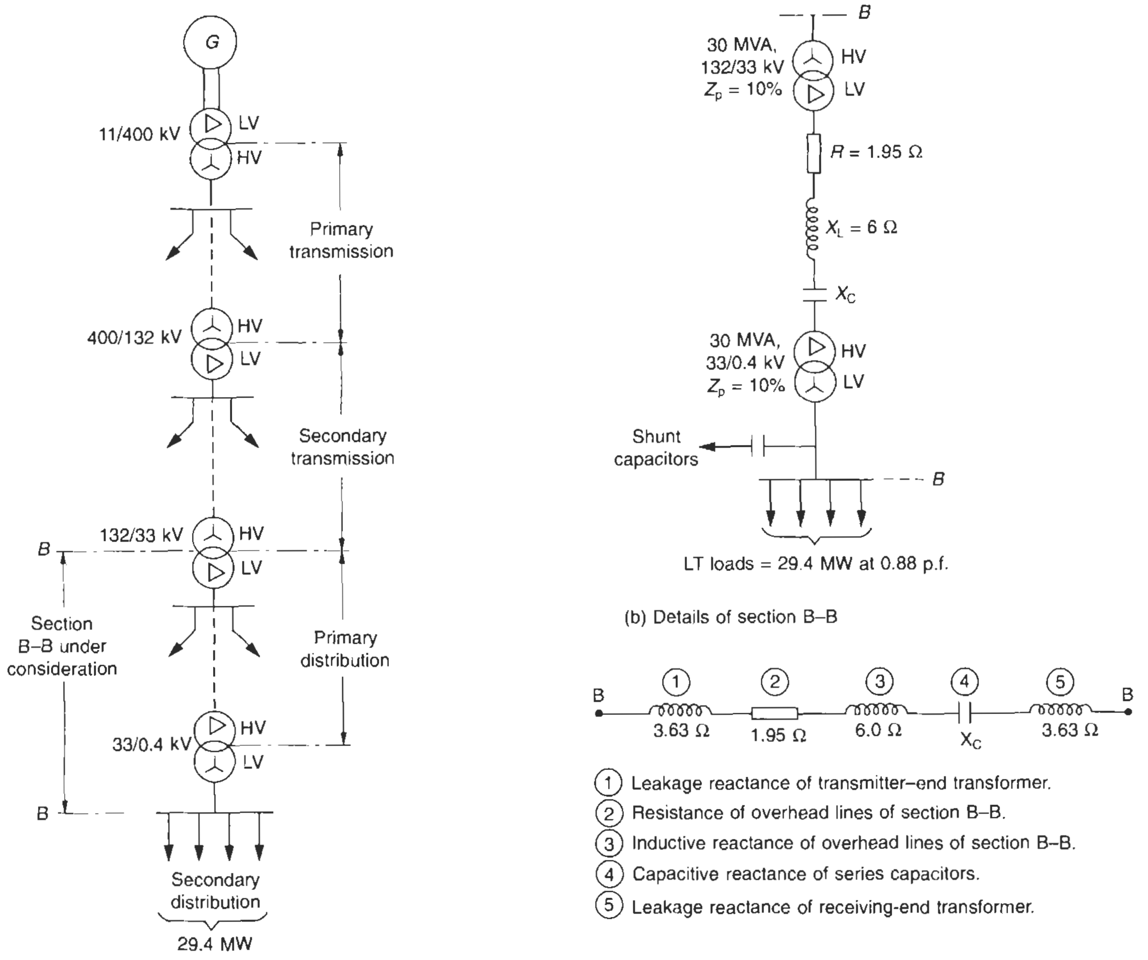

(a) Typical primary distribution network

(b) Details of section B–B

(c) Equivalent circuit of Section B–B

Figure 24.25 Determining the value of series capacitors for a primary distribution network

To study the impact of series compensation we consider the full-rated current of the transformer and the line for optimum utilization of the entire system.

$$E_s = \frac{33}{\sqrt{3}} + \overline{I_1} \cdot \overline{Z} \cdot 10^{-3} \text{ in kV}$$

$$= 19.05 + \left(\frac{525}{1000} \angle -11.48^\circ\right) \times (1.95 + J\ 13.26)$$

$$= 19.05 + 0.525 \times 1.95 \angle -11.48^\circ + 0.525$$

$$\times 13.26 \angle (90 - 11.48^\circ)$$

$$= 19.05 + 1.024[\cos(-11.48^\circ) + J \sin(-11.48^\circ)]$$

$$+ 6.96 (\cos 78.52^\circ + J \sin 78.52^\circ)$$

$$= 19.05 + 1.024(0.98 - J\,0.199) + 6.96(0.199 + J\,0.98)$$

$$= 19.05 + 1.00 - J\ 0.20 + 1.38 + J\ 6.82$$

$$= 21.43 + J\ 6.62$$

$$= 22.43 \tan^{-1} \frac{6.62}{21.43}$$

$$= 22.43 \angle 17.16^\circ \qquad \text{(Figure 24.26)}$$

$\therefore$ Voltage drop = 22.43 – 19.05

= 3.38 kV

or 15.07 % of E_s

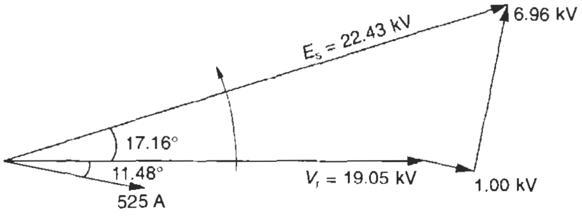

Figure 24.26 Receiving-end voltage after shunt compensation

It is difficult to operate such a system on full load. It is bound to have wide voltage and load fluctuations, more so on a line disturbance. Such a system may have to be operated well below its rated capacity to retain its stability, even when the voltages on the primary and the secondary transformers are adjusted so that the required rated voltage is available at the receiving-end. A voltage swing of 15% between a full load to a load rejection condition is too wide and may lead to outage of the system on a line disturbance. Since there is no further scope to improve the above situation with the help of shunt capacitors (the p.f. is already at 0.98), let us do so with the help of series compensation. Since the far-end p.f. is being maintained at a high level, the system can achieve some stability. A series compensation to the extent of, say 60% of the total line impedance should not be excessive, as the line already has some series resistance. Moreover, the transformers will have some resistance too which has been ignored in the above analysis and hence the chances of a sub-synchronous or ferro-resonance occurring will be remote.

$\therefore$ Series compensation = 0.6 (1.95 + J 13.26)

= 8.04 Ω (in absolute terms)

Say, $X_C = 8\ \Omega$

and size of series capacitors,

$= \frac{525^2 \times 8}{1000}$

= 2205 kVAr per phase

For 10% load variation, to be on the safe side, the capacitors must be rated for:

$= (1.1)^2 \times 2205$

= 2668 kVAr

and voltage across the capacitors,

$V_C = I_1 \cdot X_C$

$= 525 \times 1.1 \times 8$

= 4.62 kV

If we consider three units in series and nine in parallel (Figure 24.27(a)) then the size of each unit

$= \frac{2668}{3 \times 9} = 98.8$ say, 100 kVAr

and the voltage rating of each unit

$= \frac{4.62}{3} = 1.54$ kV

The improved line impedance

= 1.95 + J 13.26 – J 8.0

= 1.95 + J 5.26

and the improved transmitting-end voltage, the load remaining same:

$E_S = 19.05 + (0.525 \angle -11.48°)(1.95 + J\ 5.26)$

$= 19.05 + 1.024\ (0.98 - J\ 0.199) + 2.761\ (0.199 + J\ 0.98)$

$= 19.05 + 1.00 - J\ 0.02 + 0.55 + J\ 2.71$

$= 20.6 + J\ 2.51$

$= 20.75 \tan^{-1} \frac{2.51}{20.6}$

$= 20.75 \angle 6.95°$

$\therefore$ voltage drop = 20.75 – 19.05 = 1.7 kV

or 8.2% of E_S

This is also the regulation of the system. See the phasor representation shown in Figure 24.27(b).

Inferences

1 Raising the compensation from 60% to, say, 70% may further improve the above situation but this may not be advisable to maintain a high level of stability during line disturbances. Moreover, the p.f. of the system has already reached a high of cos 6.95°, i.e. 0.99, which also is not advisable. To be more safe, the level of shunt compensation should be slightly reduced.

Note

Since the load variation on an HT distribution network will be only nominal, and the network will also have enough resistance, it should be possible to compensate the system up to 70% or so, to further improve the regulation of the network, say up to 5% of E_S, without jeopardizing the level of stability. The application engineer can take a more judicious decision, knowing the condition of the network to be compensated.

2 The voltage variation with the series compensation, although high, at about 8.2%, is still manageable by adjusting the tappings on the transmitting-end transformer, for which a transformer with higher tappings may be selected or a transformer with a higher secondary voltage may be chosen, say, at 36 kV or so. For minor adjustments, the tappings on the receiving-end transformer may be used. With this, the above system can be utilized to its optimum capacity.

3 The phasor displacement between the transmitting and the receiving ends, with the use of series compensation, is reduced and the receiving-end voltage has moved closer to the transmitting-end voltage, which will provide more stability to the system during a line disturbance.

4 Even a higher cross-section of line conductors would be able to improve the above situation by reducing the line resistance and hence the voltage drop.

5 It will be pertinent to note that series compensation on HT lines will be more effective when the line inductive reactance itself is high, as when the line is individually feeding highly inductive loads, such as an induction or an arc furnace or other similar loads. Nevertheless, it can also be effectively applied on overloaded distribution networks similar to the one we have considered above, to raise the line capacity and reduce the voltage dip at the receiving end.

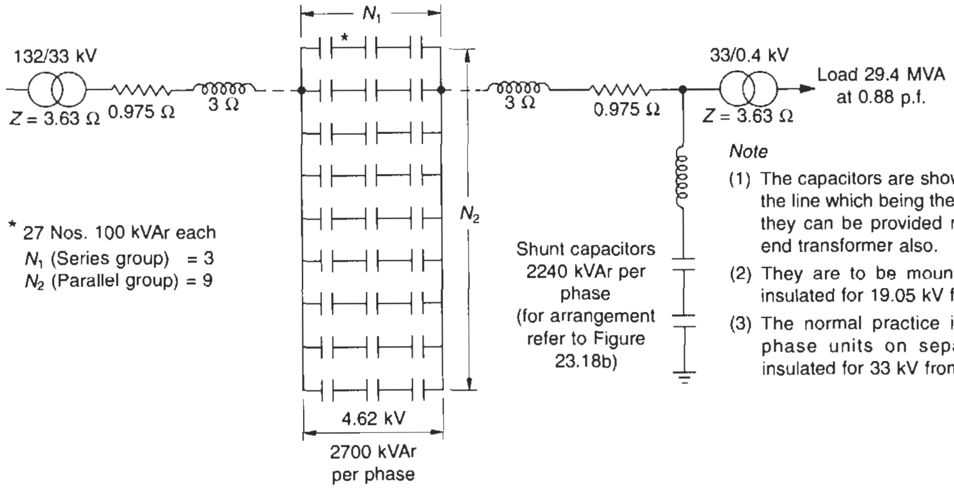

Note

(1) The capacitors are shown in the centre of the line which being the best location. But they can be provided near the receiving end transformer also.

(2) They are to be mounted on platforms, insulated for 19.05 kV from the ground.

(3) The normal practice is to mount each phase units on separate platforms, insulated for 33 kV from each other.

Figure 24.27(a) Application of series compensation on an HT distribution network

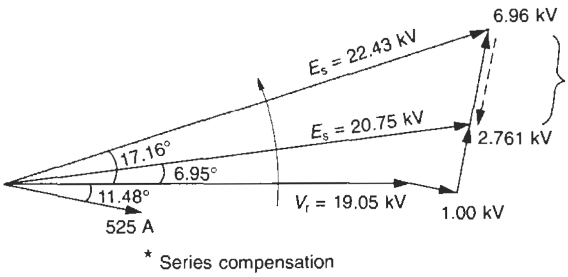

Note

In fact E_s is the fixed phasor and V_r the variable. But for ease of drawing, we have considered V_r as the base phasor.

Figure 24.27(b) Receiving-end voltage after shunt and series compensations

6 For large concentrations of loads, such as for an industrial or a residential area and where addition of more loads in future is likely, forecasts of a realistic loading of lines may fail. Therefore, for growing cities particularly, it is advisable to install initially a slightly larger primary distribution network to cater for the increasing power needs. It is felt that for such load centres, an 11 kV or even 33 kV. distribution is inadequate. The commensurate primary distribution for such locations may be considered at 66 kV, and in residential and industrial areas or public places underground cabling should be adopted to minimize the risk of running such high tension lines in the open and also save the scarce load area. Underground cabling is more expensive than an overhead system, but is more safe in congested areas. The use of an overhead or underground system will depend upon the location, safety and convenience, besides consideration of cost. See Lakervi and Holmes in the further reading for more details.

Note

Countries like the USA and Japan have adopted underground cabling for transmission of power up to 1000 MW at 550 kV.

7 To provide reactive support for any power system or network, suffering from voltage fluctuations or high line losses or when it is felt that the system cannot transfer the required load it is important to carry out a field study first, to identify areas and suitable locations where reactive support would be more appropriate. A procedure along the lines of Example 24.3 to determine the amount and type of reactive support should then be adopted.

Above we have dealt primarily with the technical aspects of reactive controls. For commercial implications, see Lakervi and Holmes.

24.9 Transient stability level

This defines whether a system can restore normal operation following a major disturbance, such as on a

- Transient phase to ground fault
- Phase to phase fault
- The outage or failure of a generating unit
- Failure of the overhead line or a transformer and
- Sudden opening of the line.

The highest level of power it can transmit during such disturbances is its transient stability limit. Dampening the power oscillations on such disturbances and restoring the power system to stable limits are the main objectives of reactive control. From the load curves one can observe that an uncompensated line may have dangerous power swings on small fluctuations of load, which may lead to loss of synchronism between two generators and even cause an outage of the line. To keep this system stable during such disturbances, it must be operated at much below its steady-state stability level.

Consider a typical case during a line disturbance when the line is not adequately compensated. A transmission network is being fed by more than one generator. When any transient fault occurs, the current flow through the fault will be shared more by the machine nearest to the fault and less by the one installed a little away. This will upset the earlier tandem operation of the machines and they will become unequally loaded and may fall out of step. The one near the fault will slow down more than the other. The machine that shares the smaller amount of the load will slow down less and feed more, becoming overstressed. Now it will slow down and the other will pick up. The situation will reverse thus and so the situation will continue creating a hunting effect. The following may result depending upon the transient stability limit of the system.

- The fault is cleared promptly and the normal condition is restored. The setting and the speed of the protective relays should be commensurate with such a situation and isolate the faulty circuit as quickly as possible.
- If not, the machine being loaded most may fall out, which may not necessarily be the one nearer the fault or
- The situation may have a cascading effect until all the machines fall out, resulting in a total blackout.

To achieve a better level of stability it is desirable that the line be loaded a little less than the optimum power it is capable of transmitting to sustain the system disturbances such as load fluctuations, faults and switching of large machines without an outage. The load curves (Figure 24.20) provide a guide to determine the level at which the line should be operated and from this can be assessed the magnitude of disturbances that the line can safely sustain and recover promptly without an outage. Series reactive support will become essential. whenever the line loading is expected to be more than the SIL, P_0 (generally on 132 and 220 kV networks). But series reactive support has been found extremely useful on existing lines even up to 11 kV, which are required to cater for higher power demands than were originally envisaged.

24.10 Switching of large reactive banks

The series capacitors are connected in series with the power lines to provide reactive control to an individual load or to a power distribution or transmission system. They are therefore switched with the power lines and are thus permanently connected devices.

But the shunt capacitors can provide reactive control through unswitched, i.e. permanently connected, banks (fixed VAr) or through switched banks (variable VAr). The unswitched VAr may be used to aid stability against possible overvoltages of the network, during a load rejection or an open circuit while the switched VAr is used to maintain the level of p.f. during load variations. VAr switching can be done in two ways.

1 **Manual control** This is through switching devices by switching in or switching out a few units. In manual switching it will be possible only in steps, and may not provide a smooth compensation and may also cause switching transients (Section 23.5.1). Moreover, conventional switching methods (mechanical switching through contactors and breakers), are sluggish due to the time of closing and interruption, which may be as much as three or four cycles, depending upon the type of interrupter (Section 19.5 and Table 19.1) as well as the minimum time required for the discharge of the capacitors. Human sluggishness may also introduce some delay. They are therefore ill-suited to meet the system's rapidly fluctuating needs.

However, power systems that cater to almost fixed loads at a time and whose variations occur only at specific times of the day may not require a fast response. In such cases, it is possible to provide manual switching methods which will give enough time between two switchings. Manual switching, however, has certain shortcomings, due to the human factor such as its accuracy and diligence, as noted above. The recommended practice is therefore to select fast reactive controls as noted below.

2 **Static VAr compensators (SVCs)** Whenever a large reactive control is required, the SVC is always a preferred method. The static VAr controllers are more expensive, but respond very quickly. They cause no switching transients and limit the magnitude of a disturbance, through extremely fast controls. They can handle large currents and peak inverse voltages, except voltage transients, such as switching surges or lightning strikes, which may have a front time as low as 1–2 μs only (Section 17.3.3) while the switching time of a static device (a thyristor) may be as much as one cycle, as discussed later. But surges can be taken care of by a surge arrester. The use of an SVC or a manual switching will largely depend upon the characteristics of the line, the type of load it is feeding and its importance. For a system having almost the same type of load demand during the day, manual switching may serve the purpose. But for a system with wide fluctuations, an SVC alone will be suitable. The decision will vary from one system to another and the system engineer can make a better choice.

Note

If auto-control is selected through p.f. or voltage control, care must be taken against frequent switchings of the capacitors when the load is of a varying nature which may cause the capacitors also to switch frequently. Fast switchings can be made possible by providing special discharge devices, and by controlling the number of switchings to within permissible limits (Section 26.1.1(2) by carefully arranging the units as discussed in Section 23.15.1.

In SVCs the number of switchings is of no relevance, as they are free from inrush currents. Switching is performed at the instant when the current wave is passing through its natural zero. Static devices in various combinations and feedback control systems, which may be computer-aided, can almost instantaneously (≤ 1 cycle) generate or absorb reactive power, as may be demanded by the system. Correction is quick and matches the fast-changing load parameters of the power network at the receiving end. They are capable of maintaining a near-constant voltage profile at all times at the receiving end. The correction achieved is accurate and smooth, besides being extremely fast and free from surges. They may be installed at strategic locations along the line or at the receiving end. The selection of location is an important aspect to optimize the size of compensator and a more efficient voltage regulation.

A fast VAr control is achieved through thyristor switching, which by itself is capable of a stepless variation. But switching of capacitors, which are switched in banks, is not stepless. The SVCs may be of the following types.

24.10.1 Thyristor-switched capacitor banks (TSC)

Thyristor-switched capacitor banks are normally connected in parallel with several banks of shunt capacitors to control the system voltage. Feedback sensors and controls monitor the voltage level. When the voltage swings to either side of the preset value, a few banks are switched in or switched out. This is illustrated in Figures 24.28(a) and (b). Point *a* indicates the operating point under normal conditions. During a load variation or disturbance the voltage dips and the operating point shifts to *b*. With the use of TSC, the load point is shifted back to *c*. Since the control is in steps, it may be coarse. The steps may be limited to save on the cost of thyristors. This step change in voltage can be smoothed and a stepless reactive control achieved with the use of a TCR (thyristor-controlled reactor) in parallel and operating it with the TSC banks in tandem. Such a scheme can be tailored to suit even the smallest reactive need of a system. The combination can be termed hybrid compensators. One such scheme is illustrated in Figure 24.31 and discussed later, in more detail.

In TSCs the thyristors are used in anti-parallel to switch a capacitor bank ON or OFF but without any phase angle control. A TSC therefore does not by itself generate any harmonics, unlike a TCR.

24.10.2 Thyristor-controlled reactors (TCRs)

These consist of two oppositely poled thyristors, as shown in Figure 24.29 and conduct on alternate half cycles at the fundamental frequency. Reactors may be switched or phase angle controlled. Three-phase SVCs can independently control each phase and the TCR can be used for phase balancing. When a phase angle is controlled, a stepless reactive power control can be achieved, except for generation of harmonics during the control process. The gate control at peak voltage ($\alpha = 90°$) can allow full conduction of the reactor. The conduction can be controlled by varying the gate angle, α. For example, partial conduction is possible with α between 90° and 180°, but α from 0–90° is not used, as then the circuit would produce asymmetrical currents with d.c. components. The effect of increasing the gate angle is to reduce the harmonic components of the current, and hence the power losses in the thyristor controller and the reactor. If the reactors and the thyristors are connected in delta, triple harmonics can be eliminated and filter circuits would be necessary only for the remaining harmonic quantities. Various combinations of thyristor circuits are possible to obtain a desired phase displacement between the voltage and the current (cos ϕ) and hence suppress the various harmonic contents present in the system. (Section 6.13 provides more details on this.) See also the further reading at the end of this chapter.

The number of thyristors in series, each selected for an impulse voltage of a little less than the impulse voltage withstand level of the terminal equipment (Table 11.6) can effectively limit the switching overvoltages within desired safe limits. Then connecting them in anti-parallel will mean that the voltage will be forward for either of

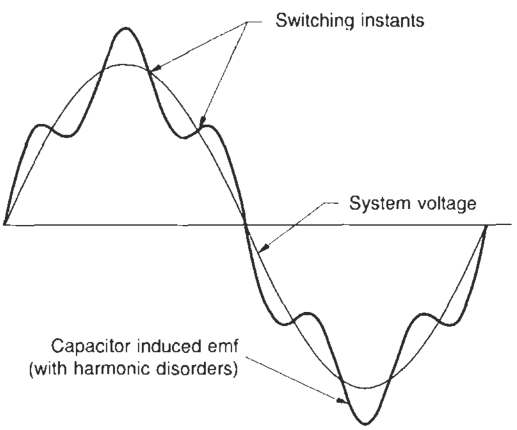

Figure 24.28(a) Switching instants for a TSC

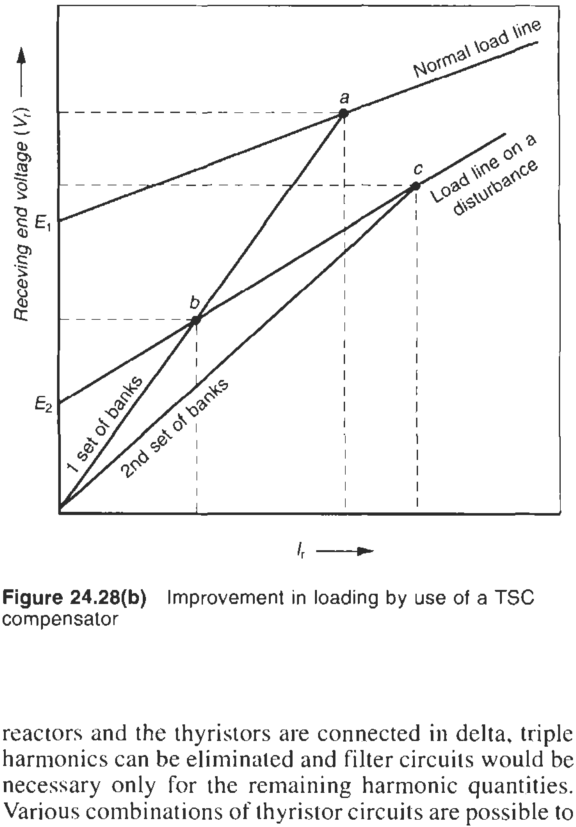

Figure 24.28(b) Improvement in loading by use of a TSC compensator

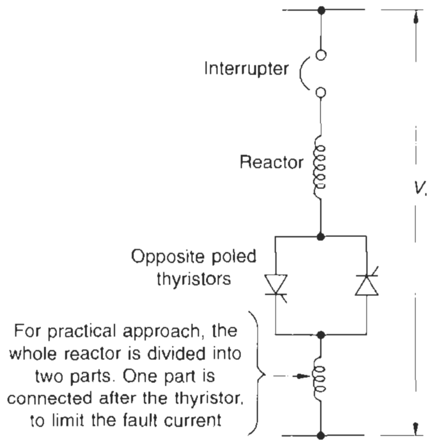

Figure 24.29 Scheme for a thyristor-controlled reactor (TCR)

the opposing thyristors, hence protecting the system against overvoltages in either direction.

24.10.3 Transient-free switching

To switch ON a charged capacitor

In a thyristor circuit if a charged capacitor is left ungated at a current zero there will be no conduction of current while the capacitor will still hold the full d.c. charge, as illustrated in Figure 24.30, equal to positive or negative peak of the system voltage. For a transient-free switching the capacitor is switched when the system voltage and the capacitors' induced e.m.f. have the same polarities and coincide almost in magnitude. This situation may take up to one full cycle (Figure 24.30) and can delay the switching by one cycle when switched immediately after a switch OFF. The system's protective devices may be introduced with an additional time delay of at least one quarter to one half cycle to bypass disturbances of a transitory nature.

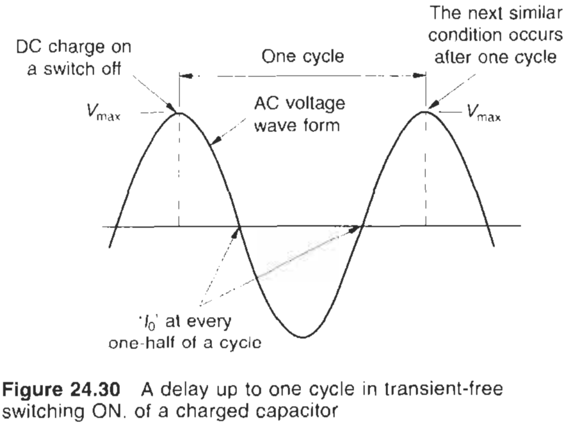

Figure 24.30 A delay up to one cycle in transient-free switching ON, of a charged capacitor

To switch OFF a charged capacitor

This can be achieved at any current zero which occurs every half cycle (Figure 24.30).

Reactor switching

Unlike a capacitor, an energized reactor on a switch-off retains no charge at a current zero and can be switched ON or OFF on a current zero at any point on the voltage wave without causing a transient. Hence there is a delay of, at most one half of a cycle between two consecutive switchings of a reactor. The balance of the two oppositely poled thyristors, however, is monitored through the gate control to avoid even harmonic quantities, although odd harmonics will still be generated when the gating angles are balanced, i.e. are equal for both the thyristors.

24.10.4 Response of SVC on a fault or line disturbance of a transient nature

An SVC offers an extremely low response time, of the order of just one cycle as noted above. But this time is sufficiently high to respond against disturbances of a transient nature. For instance, during a fault condition, as expressed by the current–time oscillogram of Figure 14.5, the SVC will respond during the transient period only and not during the sub-transient period. The sub-transient period may be less than a cycle and not fall within the response range of an SVC. But a reactive correction is also not needed for conditions of such a transient nature, which is taken care of by the surge arresters (Chapter 18). A system is normally suitable to remain stable, without an outage, during disturbances of such a transitory nature. Similarly, the SVC will stay immune to lightning and switching surges.

24.10.5 Combined TSC, TCR and fixed capacitor banks

With the combination of switched capacitors (TSCs and TCRs), also known as a hybrid combination, each phase voltage can be closely monitored to maintain a near-balanced and flattened profile at all times at the receiving end. A typical scheme is illustrated in Figure 24.31 which comprises:

- A few fixed capacitor banks which are normally energized. When they are required to be switched, they cause a switching delay due to the closing or opening of the interrupting device, besides generating the switching surges. To avoid delays and switching surges, they may also be made as TSCs, if cost is of little consideration and faster and more accurate corrections are more important, in view of highly fluctuating and non-linear load demands.
- A few TSCs for finer reactive controls.
- A few TCRs to balance the reactive power supply. They may generate harmonics, which must be suppressed to avoid any resonance. TSCs and TCRs are monitored through a feedback control system.
- A filter circuit to absorb the harmonic currents generated by TCRs and in certain conditions, when TCR is 'OFF',

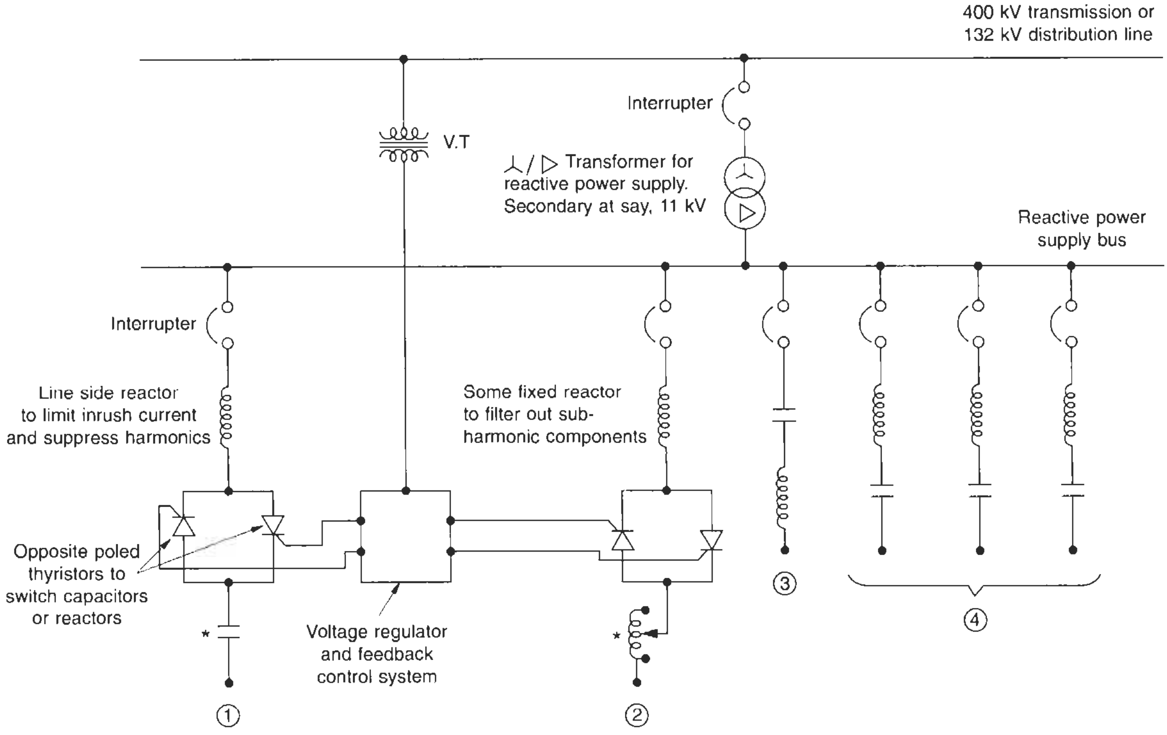

Note: * Capacitors and reactors may be Δ connected to eliminate triple harmonics

① Thyristor switched capacitors

② Thyristor controlled variable reactor (TCR) (it may also be a saturated reactor)

③ Filter circuit to absorb harmonic currents caused by TCR

④ (i) A few fixed capacitor banks that may be normally ON.
(ii) Normally ▷ connected. They are not grounded, when ⅄ connected.

Figure 24.31 Scheme for a reactive power control showing combined TSC_s, TCR_s and fixed capacitors

also generate capacitive reactive power. Refer to Figure 24.33 for more clarity.

Consider a normal load line (1) (Figure 24.32) having the initial operating point at (a). On a disturbance, the load line shifts to (2) and the operating point to (b). The TCR would respond and some inductive reactance (X_L) will be shed to raise the content of X_C. The load line will become less inductive and more capacitive to help the voltage rise to point (c) within one cycle. If the voltage is still below the preset value, some capacitors can be switched ON either electromechanically or through TSCs, depending upon the system adopted. The delay at point (c) will depend upon the method of switching of the capacitor banks. The voltage will now jump to point (d) and final correction is achieved up to point (e). The sequence a–e would complete in less than two cycles if all the components are thyristor switched. The sequences from a-b-c-d-e can be reduced to a-b-e allowing a little over- or undershoots from c to d.

Notes

1 Reactive control is also possible through synchronous condensers. As they rotate, the rotor stores kinetic energy which tends to absorb sudden fluctuations in the supply system, such as sudden loadings. They are, however, sluggish in operation and very expensive compared to thyristor controls. Their rotating masses add inertia, contribute to the transient oscillations and add to the fault level of the system. All these factors render them less suitable for such applications. Their application is therefore gradually disappearing.

2 Reliability of shunt or series power capacitors is of utmost importance for the security of the system on which they are installed. Their failure may disturb the system or result in a system outage.

3 Generally, SVCs are designed for 11 or 33 kV and connected to a higher voltage system through a dedicated transformer through the tertiary of the main transformer. Figure 24.33 illustrates a typical SVC system using a dedicated transformer.

4 Since reactive controls are normally meant for large to very large installations, the practice so far has been to use thyristors only for such applications. With the advent of IGBTs, smaller installations can now be switched through IGBTs.

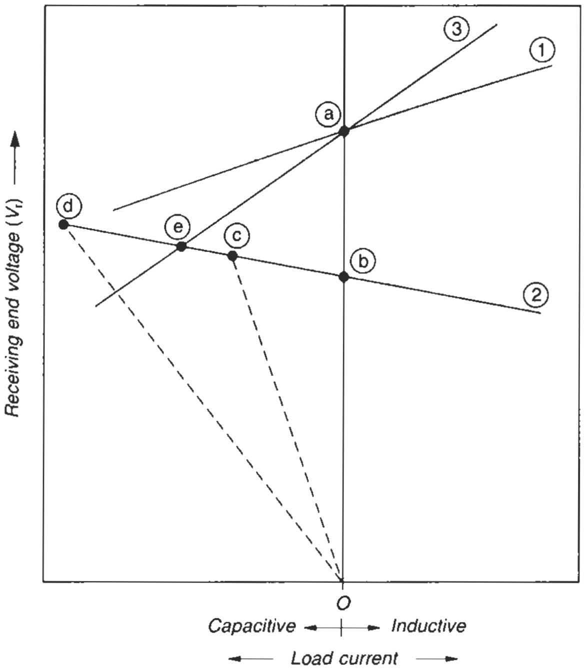

① – Normal load line
② – Load line on a disturbance (overloading)
③ – Corrected load line

Note: Similarly, load lines can be drawn on a load rejection, or the generator or the line outages.

Figure 24.32 Voltage regulation during overloading through reactive management

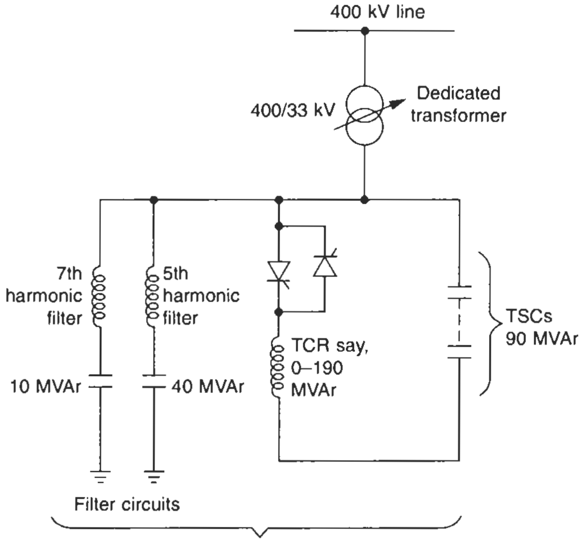

Range of compensation available
Capacitive : 0 to +140 MVAr
Inductive : 0 to −140 MVAr

Illustration:

(a) When the TCR is ON, MVAr support	= −190
Now filter circuits would also be on to suppress harmonics and absorb capacitive MVAr	= +50
∴ Net maximum reactive support available	= −140 MVAr
(b) When the TCR is OFF, TSC would supply capacitive MVAr	= +90
The filter circuits would also supply capacitive MVAr	= +50
∴ Net maximum reactive support available	= +140 MVAr

Figure 24.33 Typical SVC at 400 kV through a dedicated transformer

Relevant Standards

IEC	*Title*	*IS*	*BS*
60358/1990	Coupling capacitors and capacitor dividers	9348/1991	BS 7578/1992
60519-1/1984	Safety in electroheat installations	9080-1 to 4	BS EN 60519-1/1993
60694/1996	Common specifications for high voltage switchgear and controlgear standards	3427/1991	BS EN 60694/1997

Relevant US standards ANSI/NEMA and IEEE

IEEE 824/1994	Standard for series capacitors in power systems
NEMA-CP1/1992	Shunt capacitors, both LT and HT

Notes

1 In the tables of Relevant Standards in this book while the latest editions of the standards are provided, it is possible that revised editions have become available. With the advances of technology and/or its application, the updating of standards is a continuous process by different standards organizations. It is therefore advisable that for more authentic references, readers should consult the relevant organizations for the latest version of a standard.

2 Some of the BS or IS standards mentioned against IEC may not be identical.

3 The year noted against each standard may also refer to the year of its last amendment and not necessarily the year of publication.

List of formulae used

Capacitors for improvement of system regulation

$$\text{Regulation} = \frac{\text{Voltage at no load} - \text{Voltage at full load}}{\text{Voltage at no load}} \qquad (24.1)$$

Rating of series capacitors

$$\text{kVAr} = 3 \cdot I_l^2 \cdot X_C \qquad (24.2)$$

and voltage rating = $I_l \cdot X_C$.

I_l = line current
X_C = capacitive reactance of the series capacitors per phase

Reactive power management

$$P = \frac{E_s \cdot E_r}{Z_O \cdot \sin\theta} \cdot \sin\delta \qquad (24.3)$$

P = power transfer from one end of the line to the receiving end per phase
E_s = phase voltage at the transmitting end
E_r = phase voltage at the receiving end, in radial lines and midpoint voltage, in symmetrical lines
Z_o = surge impedance of the line
$\sin\theta$ = line length effect or Ferranti effect
δ = load angle or transmission angle

$$P = \frac{E_s \cdot E_r}{X_L} \cdot \sin\delta \qquad (24.4)$$

X_L = inductive reactance of the whole line length

Influence of line length

Velocity of propagation of electromagnetic waves

$$U = \frac{1}{\sqrt{L_o C_o}} \qquad (24.5)$$

L_o and C_o are the line parameters per phase per unit length

$$\theta = l\,\frac{2\pi}{\lambda} \qquad (24.6)$$

θ = phase shift between the transmitting and receiving-end voltages in radians or degrees
$\pi = \frac{22}{7}$ or 180° respectively
l = line length in km
λ = wavelength in km

Voltage at the receiving end, when it is open-circuited,

$$E_r = \frac{E_s}{\cos\theta} \qquad (24.7)$$

Line length effect or Ferranti effect

$$\theta = 2\pi f \sqrt{L_o C_o} \cdot l \qquad (24.8)$$

Optimizing the power transfer through reactive control

$$P = \frac{V_o^2}{Z_o} \cdot \frac{\sin\delta}{\sin\theta} \text{ per phase} \qquad (24.9)$$

V_o = nominal phase voltage
Natural loading or surge loading of a line,

$$P_O = \frac{V_O^2}{Z_O} \text{ per phase} \qquad (24.10)$$

$$P = \frac{P_O}{\sin\theta} \cdot \sin\delta \qquad (24.11)$$

Analysis of radial lines

$$E_S = V_r \cos\theta_r + J\, Z_o \cdot I_l \cdot \sin\theta_r \qquad (24.12)$$

E_s = phase voltage at the transmitting end.
V_r = phase voltage at the receiving end
θ_r = line length effect or Ferranti effect at the end of the line, in degrees
I_l = load current
Z_o = surge impedance of the line

Analysis of symmetrical lines

$$E_s = V_m \cdot \cos\theta_m + J\, Z_o \cdot I_l \cdot \sin\theta_m \qquad (24.13)$$

V_m = voltage at the midpoint of the line
θ_m = line length or Ferranti effect up to the midpoint of the line

Further reading

1 Central Board of Power and Irrigation, India (Indian National Committee for Cigre), *Electric Power Transmission at voltages of 1000 kV and Above*, Oct. (1984).
2 Central Board of Irrigation and Power, India, *Static VAr Compensators*, Technical Report No. 41, March (1985).
3 Central Board of Irrigation and Power, India, Workshop on Series Compensation in Power Systems, Nov. (1986).
4 Central Board of Irrigation and Power, India, Workshop on Reactive Power Compensation Planning and Design, Dec. (1993).
5 Westinghouse Electric Corporation, *Electrical Transmission and Distribution*, East Pittsburgh, Pennsylvania, USA.
6 Engbarg, K. and Ivner, S., *Static VAr Systems for Voltage Control During Steady State and Transient Conditions*, May 1981. Reactive Power Compensation Department, Sweden, May (1981).
7 Erinmez, I.A. (ed.), *Static VAr Compensators*, Cigre Working Group 38.01, Task Force No. 2 on SVC (1986).
8 IEEE – Delhi Section, *Advance Level Course on Reactive Power Control in Electrical Power Systems*, December (1984).
9 Kundor, P., *Power System Stability and Control*, McGraw-Hill, New York.
10 Lakervi, E. and Holmes, E.J., *Electricity Distribution Network Design*, Peter Peregrinus, London.
11 Miller, T.J.E., *Reactive Power Control in Electric Systems*, John Wiley, New York (1982).
12 Prasad, J. and Ambarani, V., *Static VAr Compensator for Industries*, BHEL, India, 59th R & D Session, Feb (1994).
13 Research Station, M.P. Electricity Board, Central Board of Irrigation and Power, India, *Series Capacitor Application to Sub-transmission Systems Case Studies*. Technical Report No. 66, Nov. (1988).
14 Weeks, W.L., *Transmission and Distribution of Electrical Energy (Design aspects)*, Harper & Row, New York.

25

Making Capacitor Units and Ratings of Switching Devices

Contents

25.1 Making a capacitor element

A capacitor unit is made up of a number of capacitor elements stacked together in combination of series and parallel configurations to add up to the required voltage rating and VAr size. A capacitor element can be formed with any of the available dielectric materials, as noted below, depending upon the voltage rating of the capacitor unit, the likely voltage variations, harmonic contents in the supply system and switching operations.

25.1.1 Metallized polypropylene (MPP): self-healing type

Each capacitor element is made up of two layers of thin PP dielectric films, 5–10 μm thick. Each film is metallized with an Al, Zn–Al or Ag–Zn–Al alloy on one side (Figure 25.1(a)) by a vacuum deposition process. To ensure accuracy of process in metallizing the film, the process is carried out under highly controlled environmental conditions of temperature, moisture and dust. The thickness of the metal film is extremely thin, in the range of 0.2–5 μm. These two layers are then interleaved and wound on a mandrel (Figure 25.1(c)) to form an element. The size of the element will depend upon the design, voltage rating and size of the capacitor unit to be produced. These elements are the self-healing type and require no internal fuses (Figure 25.2(a)). During an internal fault, only the metallized film is fused, removing a negligible area of the metal film which is not replenished. The PP films remain almost intact, with small localized damage with a few pinholes. Their life may be considered to be around 60 000 operating hours suitable for approximately 5000 switching operations per year. But they are suitable only for linear loads. The elements are stacked together to form the required size of capacitor unit and impregnated with a suitable dielectric, which may be a synthetic oil or epoxy resin.

25.1.2 Double dielectric process

By altering the dielectric mix and its thickness it is possible to change the characteristics of an element to make it suitable for higher voltage variations and non-linear loads. Making use of this, some manufacturers have introduced an improvized version by increasing the thickness of the dielectric coating of individual elements and impregnating the entire capacitor unit so formed with a non-oil dielectric, such as epoxy resin. Epoxy resin is devoid of leakage, while leakage is possible in an oil dielectric. The unit, called a double dielectric unit, is now suitable to sustain higher voltage fluctuations and the presence of system harmonics, as required by fluctuating and non-linear loads. But provision of an inductor coil is now essential in each capacitor unit to suppress the inrush current. The repair of such units is simple and can be carried out at site if spare elements are available.

25.1.3 Mixed Dielectric (MD)

This is the non-healing type, and is normally provided with internal fuses. In this type, two layers of Al foil are used and coated with a mixed dielectric, formed of tissue or kraft paper and polypropylene (Figure 25.1(b)). Elements so formed are not self-healing and are normally provided with internal fuses for their individual protection (Figure 25.2(b)). Their life, of approximately 90 000 operating hours is better than an MPP element, and can withstand around 20 000 switching operations per year. The elements are suitable for sustaining a higher voltage variation and the presence of harmonics, as required by fluctuating and non-linear loads.

The elements thus formed are then inserted into a sheet steel container, vacuum dried and impregnated, with suitable non-PCB dielectric, which may be an oil dielectric or epoxy resin. The capacitor shell is then hermetically sealed, in oil dielectrics, to avoid any leakage of dielectric during operation.

Until the 1970s the chemical used as the impregnating and dielectric medium for capacitor units was PCB (polychlorinated biphenyl) liquid. It was found to be toxic and unsafe for humans as well as contamination of the environment. For this reason, it is no longer used. The latest trend is to use a non-PCB, non-toxic, phenyl xylyl ethane (PXE-oil), which is a synthetic dielectric liquid of extremely low loss for insulation and impregnation of the capacitor elements or to use mixed polypropylene or all-polypropylene (PP) liquids as the dielectric. A non-oil dielectric, such as epoxy resin, is also used.

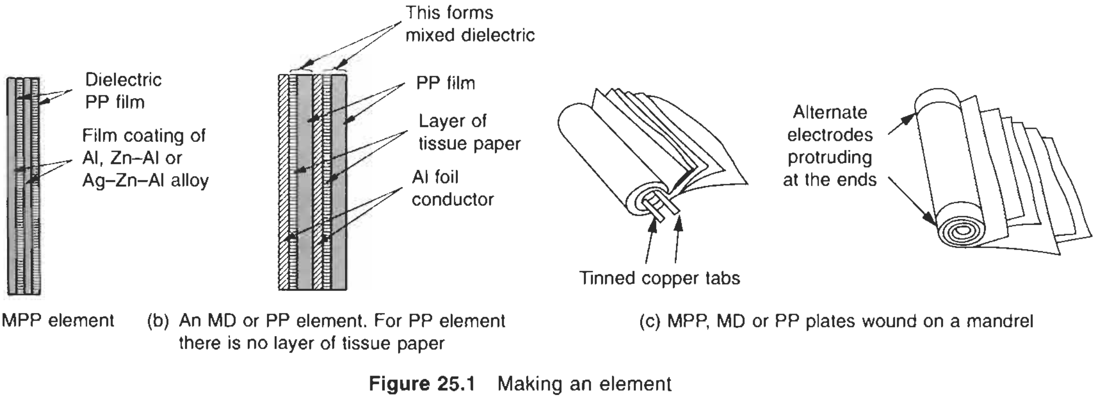

(a) An MPP element (b) An MD or PP element. For PP element there is no layer of tissue paper (c) MPP, MD or PP plates wound on a mandrel

Figure 25.1 Making an element

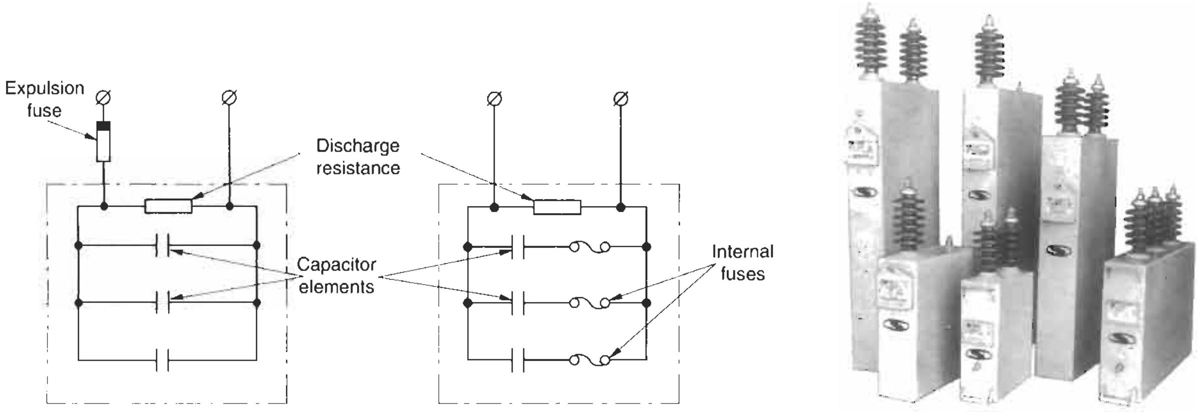

(a) Use of expulsion type external fuses (For self-healing type (MPP) capacitor units

(b) Use of internal fuses (For non-healing type (MO or PP) capacitor units)

(c) Finished capacitor units

Figure 25.2 Arrangement of capacitor elements for making a capacitor unit (Courtesy: Savin Capacitors)

Such capacitor units require careful meticulous checks by measuring the capacitance of the unit every six months or even less, depending upon the duty and the switching operations it is performing. Repair is not possible at site as it requires a re-impregnation under vacuum and hermetic sealing once again which is possible only at the manufacturer's works. Since it may not be possible to exercise close monitoring of the health* of the capacitor unit when it is in operation it is possible that there have occurred progressive isolation of elements after blowing off the internal fuses. This may cause a reduction in the capacity of the unit and hence an undercompensation. The internal fuses cannot be replaced at site, being installed inside a sealed unit.

We provide in Table 25.1 a brief comparison of the different types of dielectrics in use for impregnation and insulation while forming capacitor elements. The table will also help make a proper choice of the dielectric and the type of capacitors for a particular application.

25.2 A critical review of internally protected capacitor units

While it is true that in the absence of external fuses it is not possible to assess the health of a unit, it is equally true that an intact external fuse is also no guarantee of a healthy unit. In fact, internal fuses isolate only small elements and the capacitance of the unit remains almost intact over long periods. Periodic checks, say, once every six months, are important to assess the health of the unit and this is applicable to all types of capacitor units. Generally, external fuses show a fault between the line and the shell only. They stay immune to mild immense faults occurring inside the shell. Minor faults therefore do not show up in externally protected capacitor units, while the capacity of the unit may have deteriorated below acceptable limits over a period of time. It is also possible that failure of a few elements on a minor fault may lead to a cascade failure of the healthy elements connected in parallel, due to an overvoltage across them (Figure 25.3). This is a feature that is almost absent in series-protected units (see also Section 25.4.2). But self-healing types of capacitors have

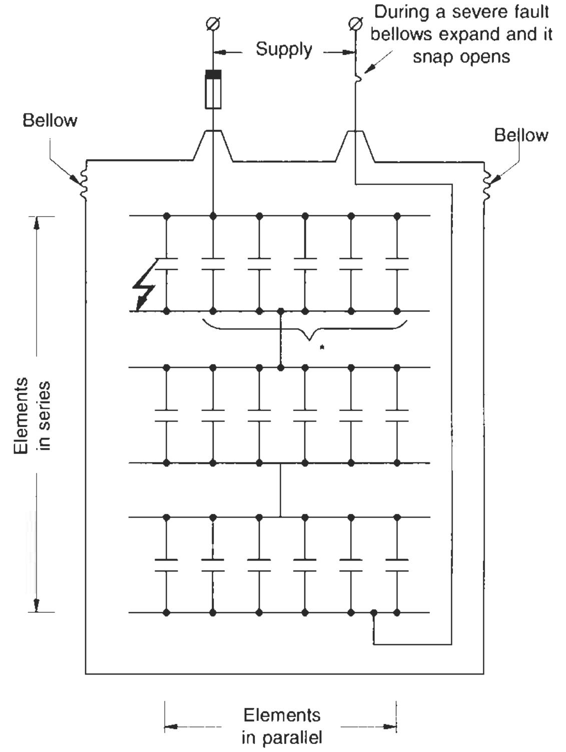

* Failure of one element will cause an overvoltage across the others in parallel and may lead to a cascade failure.

Figure 25.3 Cascade failure of healthy elements in the absence of an internal protection

---

*with the availability of microprocessor-based p.f. correction relays (Section 23.17) which measure the health of a unit while performing switching operations, and indicate this through a display, blinker or alarm, it is now possible to monitor the health of a unit while in operation and to take prompt preventive or corrective measures.

Table 25.1 Application of different types of dielectrics and approximate capacitor losses

Type of dielectric	*Losses (W/kVAr) (Typical)*			*Application*
	Capacitor unit	*Discharge resistance*	*Internal fuses*	
LT capacitors				
(i) (a) Metallized propylene (MPP)	0.8	0.7	Not provided in view of self-healing feature	Suitable for systems where frequent switching is not likely and the system is free from harmonic generating sources. They are the self-healing type and their output may become reduced with time (because of failures of capacitor elements as a result of switching inrush currents and system harmonics). If the system conditions are not conducive, an inductor coil may be provided to limit the harmonic effects (Section 23.9). Some manufacturers, as standard practice, provide an inductor coil inside the shell to contain the inrush current and also dampen the harmonics.
(b) Improvized MPP	0.8	0.7	Not provided in view of self-healing feature	1 The thickness of the dielectric coating on individual elements is nearly double the above 2 For total impregnation of the capacitor unit, a non-oil dielectric such as flexible epoxy is used to eliminate leakage 3 The elements are still the self-healing type 4 They are suitable for moderately fluctuating voltages and moderately non-linear loads 5 Use of an inductor coil in each capacitor unit is still essential, to suppress the inrush currents
(ii) Mixed dielectric (MD) (paper and polypropylene)	1.5	0.7	0.25	1 These are suitable for systems with varying loads and requiring frequent switchings, such as when the capacitor units are connected on an automatic switching mode 2 Where the system is having harmonic generating sources (non-linear loads) and is prone to a large amount of harmonics
(iii) All polypropylene (PP) (film foil)	0.5	0.7	0.25	3 Systems prone to frequent voltage variations 4 Capacitor elements are non-self-healing and are generally provided with internal fuses 5 An inductor coil may not be necessary with such capacitors
HT capacitors				
(i) Paper dielectric	← 2.2 →			Normally not in practice
(ii) Mixed dielectric (MD) [quickly outdated]	← 1.5 →		0.25	These give a reduced probability of the shell rupture due to internal fuses
(iii) All polypropylene (PP) (film foil)	← 0.2 →		0.25*	*When internal fuses are provided. When, however, expulsion type external fuses are provided, this loss would fall outside the capacitor unit. **Advantage:** All polypropylene units, besides having a low loss, provide a reduced probability of shell rupture

the ability to regain their lost capacitance, hence they can perform better over long periods.

The greatest advantage of internal fuses, which act as current limiting devices, may be regarded in the protection of the capacitor shell. Modern practice is to use oils and resins that may be inflammable liquids and are a source of a fire hazard in the event of a shell rupture on a severe fault. Internal faults may cause arcing and ionize the impregnating dielectric liquid and generate gases. Excessive gas pressure on a severe fault may cause the shell to explode. Shell rupture protection is a vital consideration in externally protected capacitor units. Since there is no control over small internal faults until they become major fault, protection can be provided only for the whole unit and the entire unit has to be dismantled after such a fault. In fact, the capacitor bank may have to be shut down completely to replace the lost unit with a new one to avoid an imbalance, besides making up for the lost capacitance.

In units with internal protection the fault is not severe, as the fuses with each element will isolate the element quickly on the smallest fault and prevent the occurrence of a major one. The operation is extremely fast as all the parallel elements, which are fully charged when the unit is in operation, discharge into the faulty element. The operation of the capacitor unit is restored within milliseconds. There is no necessity for shell protection in internally protected capacitor units whereas for externally protected capacitor units, fuses are required to be closely co-ordinated with the shell rupture characteristics, as discussed in Section 26.1.1(6). However, internally protected capacitors have some disadvantages too. For example, when they are used on a power distribution network and mounted on poles they are exposed to external direct lightning strikes. Similarly, line-switched capacitors are subject to internal switching surges and inrush currents. It is possible that all these surges will fuse many, if not all, the internal fuses in tandem of such capacitors because the fuses are of very small ratings and have a low transient withstand capability (I^2t). Such a fusing may render the whole unit unusable while the dielectric properties may be unaffected. It is also not easy to replace or closely monitor the health of the capacitors mounted on poles. With external fuses this disadvantage is overcome automatically as a blown fuse in both events can be easily detected and replaced.

Nevertheless, unbalance is a major occurrence in either case and an unbalanced protection, in addition to short-circuit protection is imperative in all types of capacitor units. Hence it is also possible to design series protected capacitor units in larger sizes and for higher voltages, which are more economical, compared to smaller units.

Whether to use internal or external protection has become a matter of debate due to the different practices adopted by manufacturers. Users must decide on the protection that best meets their requirements.

Important

For loads, such as on motors where the capacitor unit is being switched with the machine, or where close monitoring of the capacitor health is a prerequisite to avoid an eventual outage of the capacitor unit by gradual depletion of its capacitance, internally protected capacitor units may be preferred.

25.3 Self-healing capacitors

The failure of a capacitor element due to a change in the system parameters, such as fluctuations in voltage, switching operations or the presence of harmonic generating sources on the system is quite common. The element may also fail as a result of internal defects in the element itself or its dielectric quality. The dielectric film coating, being extremely thin (5–10 μs), may break down quickly under such unfavourable operating conditions and cause a failure of one or more elements. At excessive fault currents, however, it may cause a blow up of the external fuses, rendering the whole unit unserviceable and causing an extra voltage across the healthy units connected in the same parallel group of capacitor banks. Such an occurrence is rare but it may generate excessive pressure due to heating of the dielectric within the shell and endanger safety. To avoid explosion of the shell it is common practice to provide pressure relief bellows in the unit. These will expand under such conditions to relieve excessive inside pressure, on the one hand, and isolate the supply to the unit, on the other, by snap-breaking the capacitor's internal connecting wire between the capacitor terminals and its elements, as shown in Figure 25.3.

The metallized film capacitors have the characteristic of self-healing. On a small dielectric failure the capacitor element is not rendered completely unserviceable. After clearing the fault, the affected capacitor element returns to the circuit and the capacitor unit functions normally. Only the punctured area is eliminated from the element and causes a negligibly small reduction in its capacitance value. Such a characteristic is termed 'self-healing' and such capacitors are known as the self-healing type.

The capacitor element in this case is made up of extremely thin metallic films. When a dielectric failure occurs in any of the elements, the current passes through the film. The film, being too thin to sustain the current, fuses only at the point of dielectric puncture clearing the fault quickly. The external fuses remain intact, and so remains the affected element in service. Some manufacturers claim that 10 000 such failures and healings may reduce the rating of the element or the unit made up of such elements by barely 1%.

25.4 Making a capacitor unit from elements

For low-voltage applications these elements may be made up to 1 kVAr or so each and designed up to 440 V, depending upon the system requirement, while for high-voltage applications, they may be designed up to 2–3 kV, each rated for 20–100 kVAr. These values are only indicative and may vary from one manufacturer to another depending upon the dielectric used, the process adopted and the site requirements.

When larger units are required, a number of such elements with appropriate voltage and kVAr ratings, may be connected in parallel, the size of which will depend upon the requirement and the economic size of the container. For an LT system, each unit may be made up to 50 kVAr, while a more realistic size is found up to 25 kVAr in steps of 1, 2, 3, 4, 5, 10, 15, 20 and 25 kVAr. For HT capacitors, they may be made in larger units, such as 50, 56, 84, 100, 150 and 166.7 kVAr. For higher voltages, the elements may be connected in series groups say, three or four series groups, to make them suitable for a 6.6 kV system and four to six elements up to a 15 kV system. For yet higher voltages, the capacitor units may be connected in series to achieve almost any operating voltage. These series elements may be connected in parallel to achieve larger ratings as may be required. Figures 25.4(a) and (b) illustrate some arrangements.

25.4.1 Restriction in series-parallel combinations of capacitor elements

While making a capacitor unit, the same precautions would be mandatory as discussed in Section 25.5.1 for making a bank from a number of capacitor units. This is to ensure that failure of a few elements during operation does not cause an overvoltage that is more than permissible (Table 26.1) across the healthy elements and an unbalance in the three phases.

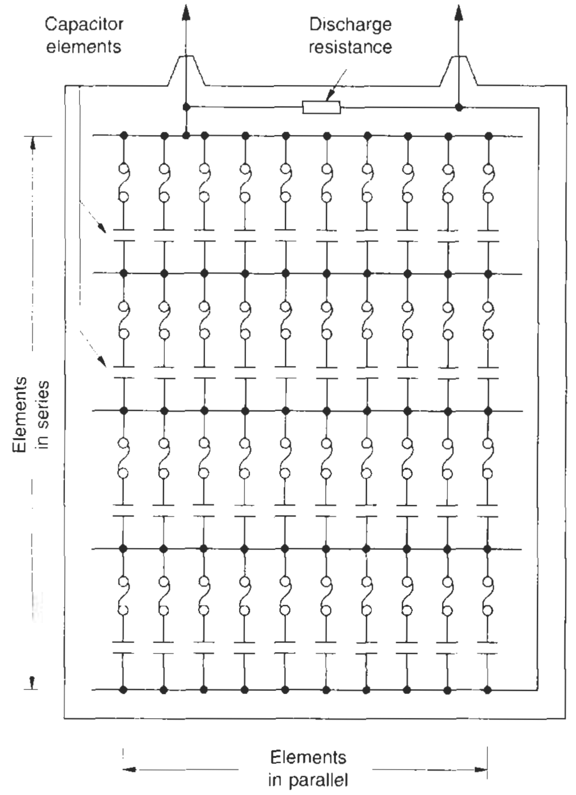

(a) Use of internal fuses

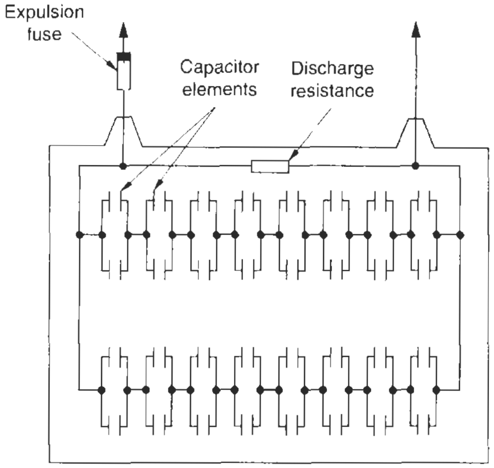

(b) Use of expulsion type external fuses

Figure 25.4 Arrangement of capacitor elements for making a capacitor unit

25.4.2 Protection of capacitor elements

The elements must be protected against dielectric failures. This may be done in two ways – through internal or external fuses – as discussed above. When the fuses are internal they are provided with each element as illustrated in Figure 25.4(a). The purpose is to isolate any element that has developed a fault, rather than rendering the whole unit unserviceable. If external fuses are provided, as illustrated in Figure 25.4(b), they will isolate the whole unit on a fault. Regular monitoring of health of a capacitor unit is essential to ensure that its kVAr rating is not reduced more than is permissible (Section 26.3.1(1)). A reduced rating, besides undercompensating the reactive requirement, will also cause a voltage unbalance in the system, leading to voltage fluctuations and magnifying the harmonic contents.

It may, however, be noted that the dielectric failure of an element during operation is not an unwarranted feature, so long as it does not cause the rating of the defective unit to fall below the permissible limits over long periods of operation. The size of each element is too small to cause a significant variation in the rating of the unit. However carefully the process and quality controls are monitored, during the impregnation and forming of coils small voids are still possible that may yield during operation. Close monitoring of the rating and unbalance is, however, essential to ensure a permissible rating and voltage unbalance on a large installation, as noted in Section 26.1.

25.5 Making capacitor banks from capacitor units

For higher system voltages, it is common practice to use more than one lower voltage rating, identical capacitor units in series, to obtain the required voltage. With the use of a number of such series connected units in parallel, one can make any size and voltage capacitor banks. The following are a few more common practices:

(a) Single star:
    As illustrated in Figure 25.5(a)
(b) Double star:
    As illustrated in Figure 25.5(b)

Example 25.1

To make 76 kV, 14 400 kVAr capacitor banks, use 75 kVAr capacitor units suitable for 11 kV each.

$$\therefore \text{ Total no. of units required } = \frac{14\,400}{75} = 192$$

System voltage = 76 kV

$$\therefore \text{ Voltage phase to neutral } = \frac{76}{\sqrt{3}} = 43.88 \text{ kV}$$

∴ Number of 11 kV capacitor units, required in series per

$$\text{phase } = \frac{43.88}{11} = 4$$

With adjustment in the voltage rating of the 11 kV capacitor units, the bank may be made suitable for the required system

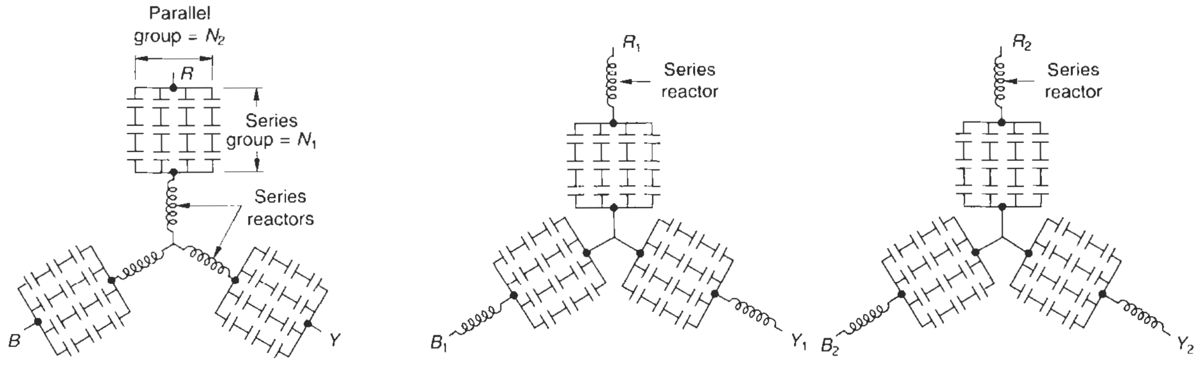

(a) Single star series/parallel capacitor banks with neutral side series reactors

(b) Double star series/parallel capacitor banks with line side series reactors

Figure 25.5

voltage. Small voltage adjustments by the manufacturer may also be essential when series reactors are being used.

No. of single phase units required per phase $= \frac{192}{3} = 64$

We may therefore consider a double star system, each having a configuration for each phase of 4 × 8 units, that is, four units in series group to make up the required phase voltage and eight in parallel group to make up the required kVAr (Figure 25.6).

25.5.1 Precautions against overvoltages on the failure of some units

For large capacitor banks using a number of small identical units per phase the configuration of the units must be such that a fault or a failure in one unit of a phase should not result in an overvoltage of more than 10% across the remaining healthy units in that phase. This requirement becomes more specific when the capacitor units are used with external fuses and a fault would mean the fallout of all units. A unit with internal fuses, however, may not pose such an eventuality, as the fault would result in the failure of just one or two elements of that unit and may not cause an overvoltage. Similarly, metallized, self-healing type capacitor units may have fewer problems of this nature, as discussed in Section 25.3. We give below the formulae provided by leading capacitor manufacturers to calculate the magnitude of overvoltage in the event of a failure of one or more units in a group of series/parallel combination of capacitor units. It will help in rearranging and balancing the capacitor units to contain the overvoltage within 10%. To achieve this, there must be a minimum number of capacitor units in parallel:

(i) **Single-phase units connected in parallel** The voltage rise across the healthy units on the failure of a unit of the many connected in parallel can be expressed by;

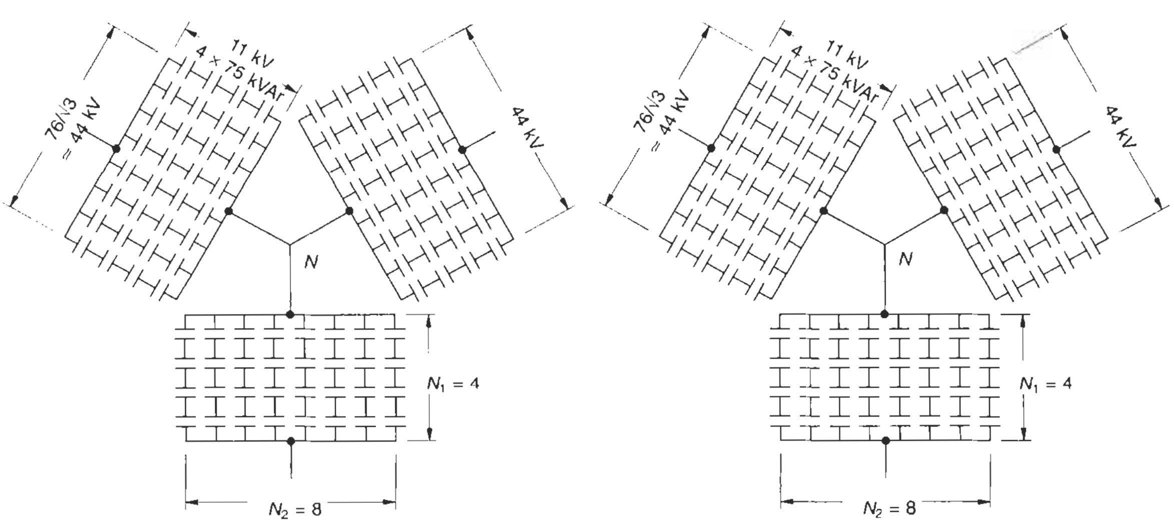

Figure 25.6 Configuration of a double-star capacitor bank making 14 400 kVAr

$$V_1 = \sqrt{\frac{N_2}{N_2 - 1}} \cdot V \qquad (25.1)$$

where

V_1 = enhanced voltage across the units on the failure of a unit

N_2 = number of units in parallel.

It may be observed that when the number of units in parallel are fewer than six, the voltage across the healthy units will rise by more than 10%, even on a failure of only one unit. The units in parallel therefore must be a certain minimum number to ensure that in no case will the voltage across the healthy units in the event of a failure of a few units exceed 10%.

(ii) **Single-star capacitor banks** (Figure 25.5(a))

(a) % overvoltage

$$= \frac{3 \cdot N \cdot N_1 - 2N}{3N_2 \cdot N_1 - 3N \cdot N_1 + 2N} \times 100 \qquad (25.2)$$

where N = number of units failed

N_1 = number of units in series per group per phase

N_2 = number of units in parallel per group per phase

(b) Fault current: The fault current on failure of one unit may be expressed by

$$I_f = \frac{3 \cdot N_1 \cdot N_2}{(3N_1 - 2)} \cdot I_c \qquad (25.3)$$

where I_c is the rated current of one unit.

(iii) **Double-star capacitor banks** (Figure 25.5(b))

(a) % over-voltage $= \dfrac{6 \cdot N \cdot N_1 - 5N}{6N_2 \cdot N_1 - 6N \cdot N_1 + 5N} \times 100 \qquad (25.4)$

(b) Fault current: The phase current in a double star is the summation of phase currents of each star (Figure 25.5(b)), i.e.

$$I_y = I_{y1} + I_{y2}$$

The fault current on a double star can therefore be calculated on the same basis as for a single-star capacitor bank.

Example 25.2

Consider Example 25.1 for 7200 kVAr units arranged in a single star and 14 400 kVAr units arranged in a double star. The computation of overvoltages and fault currents in the event of failure of a single unit in the two configurations is in a tabulated form as follows:

Parameters		*Single star*	*Double star*
Total	kVAr	7200	14 400
Rating of each capacitor unit	kVAr	75	75
Line voltage	kV	76	76
V_{ph}	kV	44	44
Voltage rating of each unit	kV	11	11
No. of series units per phase per group	N_1	4	4
No. of parallel units per phase per group	N_2	8	8
(a) Overvoltage (OV) % (on failure of one unit $N = 1$)		$\frac{3 \cdot N \cdot N_1 - 2N}{3N_2 \cdot N_1 - 3 \cdot N \cdot N_1 + 2N} \times 100$ $= \frac{3 \times 1 \times 4 - 2 \times 1}{3 \times 8 \times 4 - 3 \times 1 \times 4 + 2 \times 1} \times 100$ = 11.6 which exceeds the desirable limit of 10%	$\frac{6 \cdot N \cdot N_1 - 5N}{6N_2 \cdot N_1 - 6N \cdot N_1 + 5N} \times 100$ $\frac{6 \times 1 \times 4 - 5 \times 1}{6 \times 8 \times 4 - 6 \times 1 \times 4 + 5 \times 1} \times 100$ = 10.98 which exceeds the desirable limit of 10%
		In such cases, the overvoltage protection may still be set for 10% and even less, to contain the fault. It is a recommended practice to provide OV protection on the failure of only one half of a unit, to limit the damage to a very low extent.	
OV in the event of damage to only one half of a unit		$\frac{3 \times \frac{1}{2} \times 4 - 2 \times \frac{1}{2}}{3 \times 8 \times 4 - 3 \times \frac{1}{2} \times 4 + 2 \times \frac{1}{2}} \times 100$ $\simeq$ 5.5%	$\frac{6 \times \frac{1}{2} \times 4 - 5 \times \frac{1}{2}}{6 \times 8 \times 4 - 6 \times \frac{1}{2} \times 4 + 5 \times \frac{1}{2}} \times 100$ $\simeq$ 5.2%
(b) Load current of each unit		$I_C = \frac{75}{11} = 6.82$ A	

Phase current under healthy conditions	$\frac{7200}{\sqrt{3} \times 76}$ $= 54.7$ A	$2 \times \frac{7200}{\sqrt{3} \times 76}$ $= 2 \times 54.7$ $= 109.4$ A
∴ Fault current, I_f	$= \frac{3 \cdot N_1 \cdot N_2}{(3N_1 - 2)} \cdot I_C$ $= \frac{3 \times 4 \times 8}{(3 \times 4 - 2)} \times 6.82$ $= 65.47$ A	$= \frac{3 \cdot N_1 \cdot N_2}{(3N_1 - 2)} \cdot I_C$ (for the phase with the faulted unit) $= 65.47$ A
∴ Overloading	$= \frac{65.47}{54.7}$ $\simeq 19.7\%$	$= \frac{65.47 + 54.7}{109.4}$ $\simeq 9.84\%$

25.5.2 Special-purpose capacitor units

Like a special-purpose electric motor (Chapter 7) a capacitor unit can also be required to perform under special operating conditions, such as:

- Frequent switchings
- Varying loads
- Varying supply frequency
- High harmonic quantities (as for electric arc and resistance welders and electric arc and induction furnaces)
- High humidity
- High ambient temperature (such as near a furnace)
- Saline, corrosive or dust-laden surroundings
- Chemically aggressive or

- Hazardous installations, contaminated with inflammable gases, vapour or volatile liquids (such as for marine (aboard a ship) or mining applications)

Such types of loads may require special design of capacitor elements and their dielectric impregnation, cooling arrangement, size of shell or surface treatment. For all these applications therefore it is important to know the actual operating conditions, behaviour and characteristic of the load and its duty cycle before selecting the capacitors.

25.6 Rating and selection of components for capacitor duty

25.6.1 Current rating

The factors discussed in Section 23.5.2 give rise directly to the current drawn by the capacitor unit and indirectly add to its rating. The relevant Standards on this device recommend a continuous overload capacity of 30% to account for all such factors. A capacitor can have a tolerance of up to +15% in its capacitance value (Section 26.3.1(1)). All current-carrying components such as breakers, contactors, switches, fuses, cables and busbar systems associated with a capacitor unit or its banks, must therefore be rated for at least $1.3 \times 1.15 I_c$, i.e. $1.5 I_c$. For circuits where higher amplitudes of harmonics are envisaged, for reasons of frequent load variations or more electronics circuits, it is advisable to consider a more liberal factor, say, up to 200% I_c. See the footnote in Section 26.1.1(3).

Example 25.3

For a capacitor bank of 500 kVAr in 10 units of 50 kVAr each, for an automatic power factor correction the rating of components would be

$$I_c = \frac{500}{\sqrt{3} \times 0.415} \quad \text{(for a 415 V supply system)}$$

$$= 695.6 \text{ A}$$

∴ Incoming equipment should be suitable for

695.6×1.5 A

or 1043.4 A, say, 1000 A

and for individual units 104.3 A, say, 100 A

We have summarized in Table 25.2 the basic parameters to select the correct type of components for capacitor duty.

Note

As a rule of thumb consider the rating of switching and protective devices in amperes, the minimum being twice the kVAr rating of the capacitor units in LT. For a more economical selection, however, the manufacturers of switching devices and control equipment may be referred to for their recommended size of equipment, as some sizes may have a built-in reserve capacity not requiring a higher component rating.

25.6.2 Precautionary measures for circuits having large capacitor banks

A capacitor draws excessive charging currents and generates switching surges during a switching operation. It also magnifies harmonics when harmonics are present in the system. All these are undesirable and may become hazardous when the banks are large, the more so when the system is HT. The following are some remedial measures that can be taken to safeguard the connected equipment from the adverse effects of such parameters:

1 **Electrodynamic and thermal stresses** These are due to excessive charging currents. All the current-carrying components used in the circuit such as the

interrupter and the bus system must be suitable to withstand such stresses.

2 **Switching surges** The switching device must be capable of making and breaking the circuit successfully and generate the least possible voltage surges. All other equipment and interconnecting cables used in that circuit must be suitable to withstand the severities surges thus generated.

3 **Voltage harmonics** When used in a transformer circuit capacitors may generate harmonics. At light loads, the capacitors must be switched off or their value reduced to avoid oversaturation and consequent damage to the transformer. Otherwise they may cause resonance, between their capacitances and the inductance of the transformer, giving rise to overvoltages, on the one hand and voltage harmonics, on the other (Section 20.2.1(2)). In rectifier and arc furnace applications, however, inductive reactances of such equipment will rise due to high harmonic frequencies and offset to some extent the effect of the higher voltages produced by the third harmonic.

4 **Residual voltages** (for all ratings) Having energized once, the capacitor takes time to discharge. There is thus a residual voltage across the capacitor terminals, even after the power supply has been switched off. This residual voltage is detrimental to the connected equipment as well as to the operator. It is therefore mandatory that this residual voltage is dampened from its peak value at $\sqrt{2}\ V_l$ to a maximum of 50 V within 1 minute in LT and 10 minutes in HT shunt capacitors and 5 minutes in HT series capacitors after a switch-off. (See also the footnote in Section 26.3.1.)

When a capacitor switch is reclosed after an interruption on a capacitor which is not fully discharged the trapped charge of the capacitor will be superimposed on the applied voltage and lead to overvoltages. Suitable resistance units are fitted across the capacitor terminals as standard features by the capacitor manufacturers to dampen the residual voltage from its crest value to the desired level or less, within the stipulated time, as noted above. When faster reclosing becomes essential, as in an automatic p.f. correction scheme or for such load applications that change quickly with little discharge time between two successive reclosings as noted above then either the discharge device, as discussed in Section 25.7 or the switching scheme should be designed so that the residual voltage across the capacitor terminals decays to at least 10% of the system voltage by the next reclosing.

The following are examples where the capacitors should either be isolated from the circuit with the switching device so that its induced e.m.f. does not impinge on the connected equipment or it is reduced to a safe level by the next switching.

Protection from excitation voltages

Star/delta or auto-transformer switching of a motor
For motors compensated individually and having a star/delta or auto-transformer switching, the changeover from star to delta windings or from one step of the auto-transformer to the other is a case of rapid reclosing. This may result in an overvoltage across the motor windings due to two residual voltages, one of the motor's own induced e.m.f. at the reduced voltage of $\curlyvee$ or of tapping of the A/T and the other of the capacitor charge, if the capacitor is connected across the motor windings (terminals a_1, b_1, c_1), irrespective of the time of discharge. In such cases, the capacitor should be open-circuited while the motor is in star or auto-transformer position through a special starter. A typical power and control scheme is illustrated in Figure 25.7.

Hoist and crane applications
Descending loads may overspeed the motor and overexcite the capacitor when connected across the motor due to motor generator action above the synchronous speed (Section 6.21). Such a situation may damage the motor as well as the capacitor and must be avoided.

Electrodynamic braking
When a motor is statically controlled and employs dynamic braking (Figure 6.32) and has a capacitor also connected in the circuit it is possible that on an instant braking the capacitor may discharge itself into the static circuit and damage the electronic components used in the rectifier or the inverter units. This situation must also be avoided by suitably designing the capacitor switching circuit.

Stability of a power network
In this case the next switching may almost be instant to retain the stability of the system and save it from an outage. A static switching (Section 24.10) alone may be the correct solution for such applications.

25.7 Fast discharge devices

To accelerate discharge, one of the following methods may be adopted. This is a special requirement and the manufacturer must be informed.

- Use of extra resistance across the capacitor terminals (Figure 25.8).
- Use of high series reactor, with or without resistance across the capacitor terminals. Open-delta VT (Section 15.4.3) is one such device, which is a combination of an inductance and a resistance and is to discharge an HT capacitor unit quickly.
- Use of a switch which, in the open position, can short-circuit the capacitor with small resistance.

Notes

1 Capacitors connected directly (without a switching device) across a motor or a transformer are automatically discharged through their windings, being inductive, and need no additional resistance or inductance for a faster discharge.

2 A capacitor being switched through a $\curlyvee/\triangleright$ switching of a motor, however, poses a different kind of a problem as discussed above and requires a different type of switching scheme, as illustrated in Figure 25.7. This is because a charged capacitor

Table 25.2 Rating and selection of components for capacitor duty

Sr. no.	*Type of component*	*Reference Standard*	*voltage class*	*Insulation level*	*Current rating*	*Fault level (kA and time)*	*Any other requirement*
	1	2	3	4	5	6	7
1	Isolator	LT – IEC 60947-3 HT – IEC 60129	As per the voltage rating of the capacitor banks (Section 23.12.1) (average voltage)	As in Tables 13.2 and 14.3 for Series I or Table 14.1 for Series II voltages	Minimum 150% of the rating of the capacitor banks. For systems prone to generating excessive harmonics, and when the size of the reactor, if used, is not sufficient to suppress these, ratings up to 200% are recommended.	As for the main system.	For LT isolators minimum duty AC23. (Table 12.5)
2	HRC fuses	LT – IEC 60269 HT – IEC 60282–1, 60549 and 60644	,,	,,		,,	—
3	Circuit interrupter	LT – IEC 60947-4-1 (for contactors) HT – IEC 60056 (for circuit breakers)	,, ,,			,,	1 For LT systems, it may be a switch and a contactor, ACB or MCCB. When a contactor, they would be minimum AC3 or AC6b duty. (Table 12.5). 2 For HT systems, refer to Table 19.1, for the selection of interrupters for capacitor duty. The breaker should be chosen restrike free, as far as possible.
4	Cables and conductors	Refer to Table A16.1 in Chapter 16	,,	,,		,,	—
5	Series reactor	IEC 60289	,,	Refer to column 5	1 For smaller units, they are used to limit only the inrush currents during a parallel operation and may be rated for 0.2% of the capacitors' kVAr rating. They must be connected on the neutral side of a star-connected capacitor bank. Also refer to the notes below step 4 of Example 23.4. The series reactor may not be suitable to withstand the system fault level, nor add significantly, to the circuit impedance to diminish its fault level.	Refer to column 5	1 For limiting inrush currents: Generally, it is not required for the LT systems. For larger banks, however, say, 500 kVAr and above, when they are installed close to the supply source, so that the line reactance up to the bank is too small to limit the switching currents, the use of reactor would be advisable. 2 For suppressing harmonics: since on an LT system, the capacitor banks are normally small, there is generally no need to provide a reactance to suppress the harmonics. It is, however, advisable to provide this for larger banks above 500 kVAr to contain the overvoltages on account of this, to save the other devices also operating on the same system. For the likely magnitudes of harmonics on an LT system, refer to Table 23.1.

1	2	3	4	5	6	7
					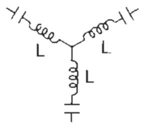		3 The size of reactor will depend upon whether it is required to only limit the switching inrush currents or to also suppress the harmonics
				2 For larger units they may be rated for 6% or so for the suppression of harmonics. Now they would be able to significantly add to the impedance of the circuit and diminish the fault level of the system, which they can withstand. They may now be connected on the line side, as shown below: 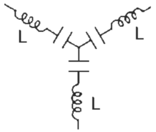	Less than the main system (refer to column 5)	4 For the protection of series reactors, when used on large installations, and are oil cooled, a Buchholz relay may be provided for oil temperature indication once any other protection deemed necessary Note: Use of series reactors is generally in H.T. systems.
6	Metering CTs	IEC 60044-1	,,	,,	As for the main components	As for the main system	Refer to Section 15.10.2. for testing
7	Protection CTs	IEC 60044-6	,,	,,	,,	,,	,,
8	Neutral CT (NCT)	IEC 60044-6	,,	,,	It will depend upon the likely unbalance current (Example 26.3) through neutral	,,	,,
9	RVT	IEC 60044-2	,,	,,	—	—	Refer to Section 15.10.1 for testing
10	Lightning arrester	IEC 60099-4	,,	It is defined by its protective level which should be less than the impulse withstand level of the weakest device in the circuit. Refer to Table 18.2 for typical values of different system voltages	Nominal discharge current as in Table 18.7	—	—

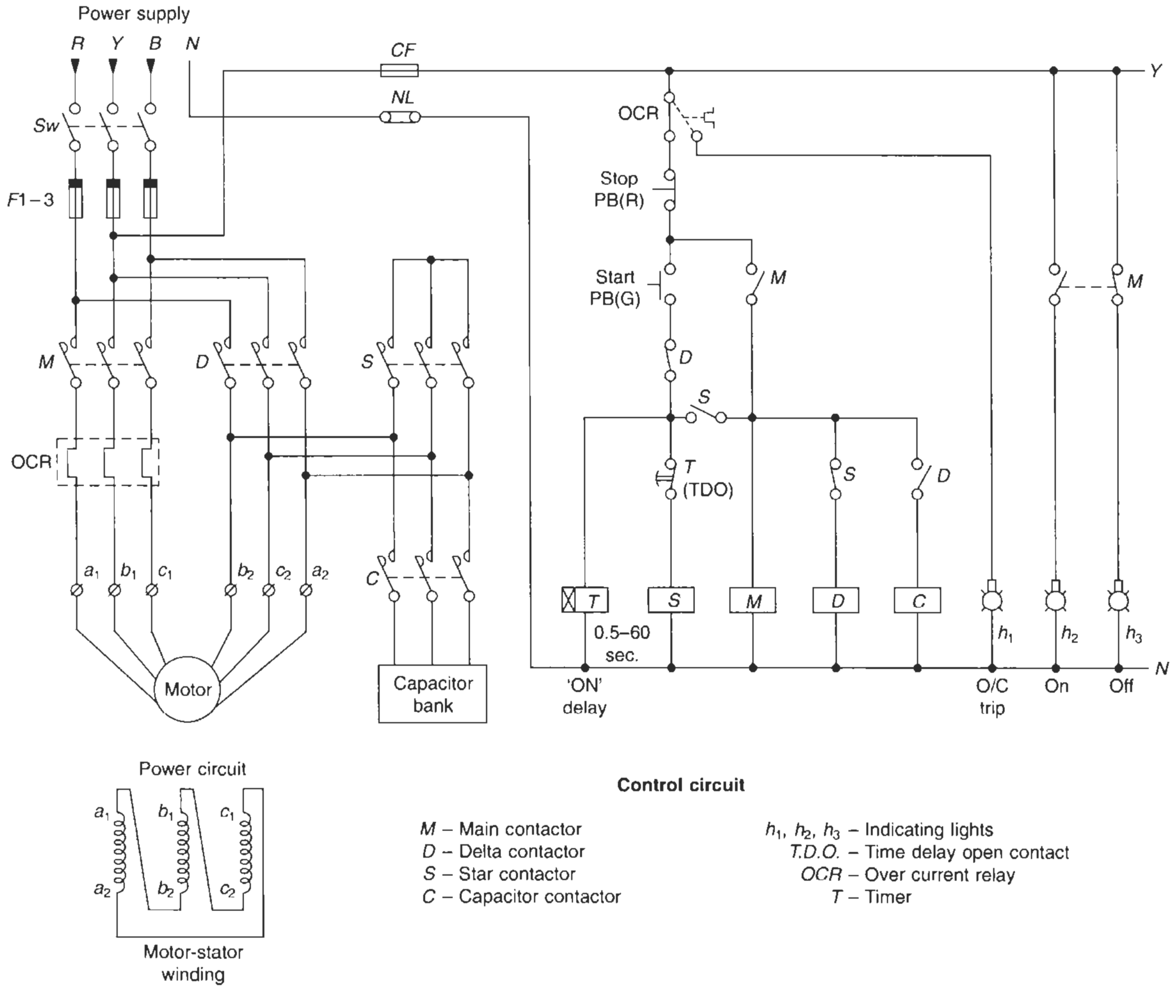

Figure 25.7 Typical power and control scheme for ⅄/▷ starting of a motor with capacitor bank, illustrating capacitor shorting during ⅄

(by $1/\sqrt{3}\ V_1$) is now switched onto a motor winding which, besides the applied voltage, is also carrying an induced e.m.f. equal to the reduced applied voltage ($1/\sqrt{3}\ V_1$).

25.7.1 The value of discharge resistance

The discharge resistance as in IEC 60252 can be determined by

$$R_d = \frac{\tau}{C} \tag{25.5}$$

where R_d = discharge resistance in Ω.

If it is very high, so that its power loss V_l^2/R_d is low then it may be left permanently in the circuit. Otherwise it should be introduced into the circuit only during interruption through the switching device) (wired across the NO contact of the switching contactor). This will provide the resistance across the capacitor banks when being interrupted and short-circuit it when closed.

C = capacitance in farad

τ = time constant in seconds. It is the time by when the exponentially varying voltage V_l, will diminish to 0.6321 V_l. In the most stringent switching operation, it can be expressed as

$$\tau = \frac{t}{k \cdot \log_e \dfrac{\sqrt{2} \cdot V_l}{v}} \tag{25.6}$$

where

t = changeover time or required discharge time in seconds. For normal applications not requiring frequent changeovers it is less than 1 minute for LT and 10 minutes for HT systems (or according to the practice of a particular country)

V_l = system voltage in volts

v = residual voltage, say, 50 V (or 75 V, depending upon the practice of a country) or a maximum up to 10% of the rated voltage for a quick reclosing

k = a constant that will depend upon the configuration of the capacitor unit and its discharge resistance, as noted in Figure 25.8.

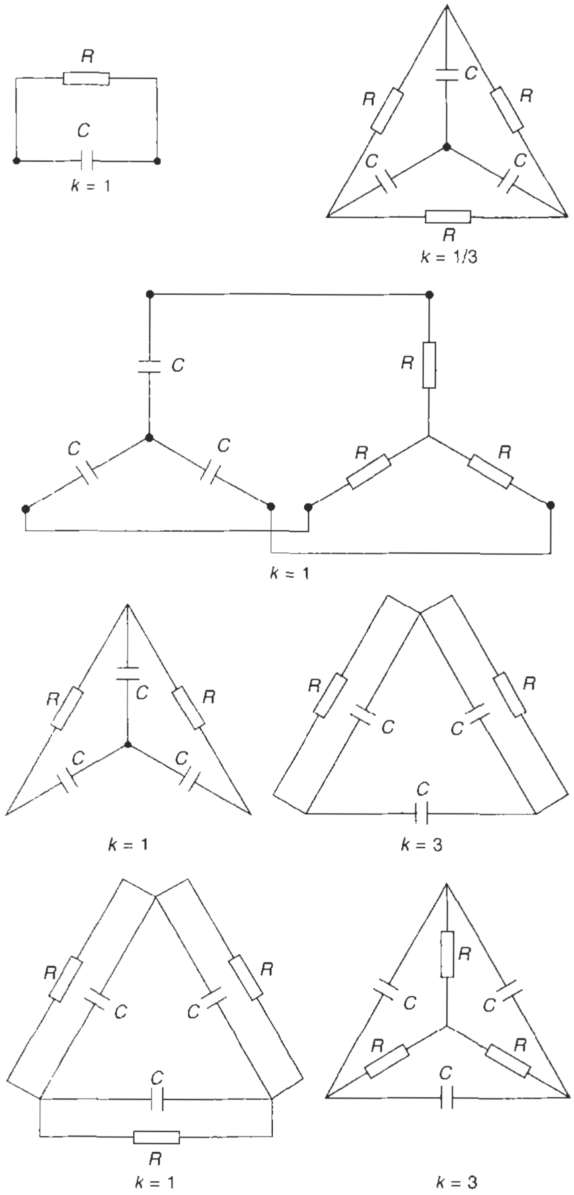

Figure 25.8 Possible arrangements to provide the discharge resistances across the capacitor terminals and values of k

Example 25.4

Consider the scheme of Example 23.4 having an automatic parallel switching. If we assume the closing sequence cycle to be 30 seconds, the recommended value of discharge resistance for each 20 kVAr capacitor bank having a capacitance of 120 μF can be determined as follows:

t = 30 seconds
V_1 = 415 volts
υ = 40 volts (10% of V_1)
k = 1 for ▷ configuration

$$\therefore \quad \tau = \frac{30}{1 \times \log_e \frac{\sqrt{2} \cdot 415}{40}}$$

$$= \frac{30}{\log_e 14.67}$$

$$= \frac{30}{2.686} \quad \text{or} \quad 11.17 \text{ seconds}$$

and discharge resistance

$$R_d = \frac{11.17}{120 \times 10^{-6}} \; \Omega = 93 \text{ k}\,\Omega, \text{ say, } 100 \text{ k}\Omega$$

If the closing period is only 15 seconds, the required discharge resistance will become 50 kΩ. The resistance loss in 100 kΩ, discharge resistance

$$= \frac{V_1^2}{R_d} \quad \text{i.e.} \quad \frac{415^2}{100 \times 10^3} \quad \text{or} \quad 1.72 \text{ watts}$$

and 3.44 watts in a 50 kΩ discharge resistance. Since the loss is negligible the resistance may be left in the circuit permanently.

25.7.2 The value of a series inductor

In an L and R dampening circuit the capacitor will discharge according to the following:

$$\upsilon = V_p \cdot \left(-\frac{R}{e^{2L}} \cdot t \right) \text{ volts} \qquad (25.7)$$

$$\text{or} \qquad \frac{R}{e^{2L}} \cdot t = \frac{V_p}{\upsilon}$$

$$\text{i.e.} \qquad t = 2 \times \frac{L}{R} \cdot \log_e \frac{V_p}{\upsilon} \text{ seconds} \qquad (25.8)$$

where

t = changeover time or required discharge time in seconds
L = series inductance in the circuit in henry
R = series resistance in the circuit in Ω.

$$V_p = \frac{\sqrt{2}}{\sqrt{3}} \cdot V_l = 1 \text{ p.u.}$$

υ = residual voltage, say, 50 V or 75 V as noted earlier, a maximum up to 10% of the rated voltage for a quick reclosing.

Example 25.5

Determine the discharge device for the discharge of a three-phase 6.6 kV, 50 Hz, 1000 kVAr, Y-connected capacitor bank, connected in units of 10 × 100 kVAr each, through an automatic p.f. correction relay, having a closing cycle of 10 seconds. Data available from the capacitor manufacturer,
C = 30 μF (for each 100 kVAr bank)

Alternative 1

Consider an open delta transformer for this purpose, having the following data:
L = 120 henry
R = 90 Ω
υ = 75 V
The time of discharge with these data

$$t = 2 \times \frac{L}{R} \times \log_e \frac{V_p}{\upsilon} \text{ seconds}$$

$$= 2 \times \frac{120}{90} \log_e \frac{6600 \times \frac{\sqrt{2}}{\sqrt{3}}}{75} \text{ seconds}$$

$$= 2 \times \frac{120}{90} \log_e 71.84$$

$$= 2 \times \frac{120}{90} \times 4.274 = 11.4 \text{ seconds}$$

The transformer should be able to meet the switching requirements in view of the following:

- That the line impedances have been ignored, which would further dampen the capacitor charge on every switch-off.
- For a fast changeover, a terminal voltage of more than 75 V is permissible, which in the above case after 10 seconds will not exceed

$$\varpi = \frac{\sqrt{2} \times 6600}{\sqrt{3}} e^{\left(-\frac{90}{2 \times 120} \times 10\right)} \text{ (ignoring the line impedance)}$$

$$= \frac{5388}{e^{3.75}} = \frac{5388}{42.52}$$

= 126.7 V which is quite low compared to 10% of 6.6 kV and will not damage the equipment.

Note

Use of additional resistance or inductance or both in series with the VT must be avoided, particularly when the VT is also being used for the purpose of measurement. Any introduction of *L* or *R* into the VT circuit would affect its accuracy.

Alternative 2

The above discharge is also possible through only an extra resistance in each capacitor switching circuit. Using equations (25.5) and (25.6),

$$R_d = \frac{t}{k \cdot C} \times \frac{1}{\log_e \frac{\sqrt{2} V_1}{\varpi}}$$

Considering the capacitors to be connected in $\curlyvee$, then $k = 1$, and

$$R_d = \frac{10}{1 \times 30 \times 10^{-6}} \times \frac{1}{\log_e \frac{\sqrt{2} \times 6600}{75}}$$

$$= \frac{10 \times 10^6}{30} \times \frac{1}{\log_e{}^{124.43}}$$

$$= \frac{10 \times 10^6}{30} \times \frac{1}{4.82}$$

$$= 69 \text{ k}\,\Omega$$

$$\text{and resistance loss} = \frac{(6600)^2}{69 \times 10^3} = 631 \text{ W}$$

This is a significant loss. The resistance therefore should be connected during an interruption only, through a switch (or the no contact of the interrupting device which can easily carry this short time burden) and should not be left permanently in the capacitor circuit.

For a normal discharge in 10 minutes a resistance of $\frac{R_d \cdot t_2}{t_1}$

i.e. $\frac{69 \times 10^3 \times 10 \times 60}{10}$

= 4.14 MΩ (say, 4 MΩ) would be necessary

This resistance would normally be fitted across the capacitor terminals by their manufacturers and will cause a permanent loss of

$$= \frac{V_1^2}{R} \text{ watts}$$

$$\text{or } \frac{6600 \times 6600}{4 \times 10^6} = 10.89 \text{ W}$$

which is reasonably low and the resistance can be left permanently in the capacitor circuit.

Relevant Standards

IEC	*Title*	*IS*	*BS*
60044-3/1980	Instrument transformers – combined transformers	—	BS 7628/1993
60056/1987	High voltage alternating current circuit breakers	13118/1991	BS 5311/1996
60099-4/1998	Surge arresters – Metal oxide surge arresters without gaps for a.c. systems	3070-3/1993	BS EN 60099–4/1993
60129/1984	A.C. disconnectors and earthing switches	9921 (1 to 5)	BS EN 60129/1994
60044-1/1996	Specification for current transformers General requirements Measuring current transformers	2705 part-1/1992 part-2/1992	BS 7626/1993
60044-6/1992	Protective current transformer for special purpose applications	part-3/1992 part-4/1992	
60044-2/1997	Application guide for voltage transformers Specification for voltage transformers General requirements	4201/1991, 4146/1991 3156-1/1992 3156-2/1992	BS 7625/1993 BS 7729/1995
60186/1995	Capacitive voltage transformers. For measurement and protection. General requirements	3156-3/1992 3156-4/1992	
60252/1993	A.C motor capacitors	2993/1998	BS EN 60252/1994
60269-1/1998	Low voltage fuses – General requirements	13703-1/1993	BS EN 60269-1/1994
60282-1/1994	High voltage fuses – *Current limiting* fuses	9385-1 to 5	BS EN 60282-1/1996
60289/1988	Reactors	5553 (1 to 8)	BS EN 60289/1995

60549/1976	High-voltage fuses for shunt power capacitors	9402/1992	BS 5564/1992
60644/1979	Specification for high-voltage fuse-links for motor circuit applications	—	BS EN 60644/1993
60947-3/1998	Specification for LV switchgear and controlgear Switches, disconnectors, switch-disconnectors and fuse combination units	13947-3/1993	BS EN 60947-3/1992
60947-4-1/1990	Low voltage switchgear and controlgear Electromechanical contactors and motor starters	13947-4-1/1993	BS EN 60947-4-1/1992

Relevant US Standards ANSI/NEMA and IEEE

ANSI/IEEE C.37.99/1994	Guide for protection of shunt capacitor banks
NEMA/ICS-2/1993	Industrial control and systems, controllers, contactors and overload relays, rated not more than 2000 V a.c. or 750 V d.c.
NEMA/CP-9/1992	External fuses for shunt capacitors
NEMA FU-1/1986	Low voltage cartridge fuses
NEMA SG-2/1993	High voltage fuses.

Notes

1 In the tables of Relevant Standards in this book while the latest editions of the standards are provided, it is possible that revised editions have become available. With the advances of technology and/or its application, the updating of Standards is a continuous process by different standards organizations. It is therefore advisable that for more authentic references, readers should consult the relevant organizations for the latest version of a standard.

2 Some of the BS or IS standards mentioned against IEC may not be identical.

3 The year noted against each Standard may also refer to the year of its last amendment and not necessarily the year of publication.

List of formulae used

Precautions against overvoltages on the failure of some units

(i) Single-phase units connected in parallel

$$V_1 = \sqrt{\frac{N_2}{N_2 - 1}} \cdot V \qquad (25.1)$$

V_1 = enhanced voltage across the healthy units on the failure of one unit
N_2 = no. of units in parallel

(ii) Single-star capacitor banks

$$\text{(a) \% overvoltage} = \frac{3 \cdot N \cdot N_1 - 2N}{3N_2 \cdot N_1 - 3N \cdot N_1 + 2N} \times 100 \qquad (25.2)$$

N = number of units failed
N_1 = number of units in series per group per phase
N_2 = number of units in parallel per group per phase

(b) Fault current

$$I_f = \frac{3 \cdot N_1 \cdot N_2}{(3N_1 - 2)} \cdot I_c \qquad (25.3)$$

I_f = fault current on failure of one unit
I_c = rated current of one unit

(iii) Double-star capacitor banks

$$\text{\% over voltage} = \frac{6 \cdot N \cdot N_1 - 5N}{6N_2 \cdot N_1 - 6N \cdot N_1 + 5N} \times 100 (25.4)$$

Discharge devices

(i) The value of discharge resistance

$$R_d = \frac{\tau}{C} \qquad (25.5)$$

R_d = discharge resistance in Ω.
C = capacitance in farad
τ = time constant in seconds

$$\tau = \frac{t}{k \cdot \log_e \frac{\sqrt{2} \cdot V_1}{v}} \qquad (25.6)$$

t = changeover time or required discharge time in seconds
V_1 = system voltage in volts
v = residual voltage
k = a constant that will depend upon the configuration of the capacitor unit and its discharge resistance

(ii) The value of a series inductor

$$v = V_p \cdot \left(e^{-\frac{R}{2L} \cdot t} \right) \text{ volts} \qquad (25.7)$$

$$t = 2 \times \frac{L}{R} \cdot \log_e \frac{V_p}{v} \text{ seconds} \tag{25.8}$$

t = discharge time in seconds
L = series inductance in the circuit in henry
R = series resistance in the circuit in Ω

$$V_p = \frac{\sqrt{2}}{\sqrt{3}} \cdot V_l = 1 \text{ p.u.}$$

v = residual voltage

Further reading

AIEE Committee, *Report of a Survey on the Connection of Shunt Capacitor Banks*, Vol. 77, pp. 1452–58, Feb. (1959).

Central Board of Irrigation and Power, India, *Manual on Shunt Power Capacitors – Operation and Maintenance*, Technical Report No. 33, Jan. (1984).

Longland, T., Hunt, T.W. and Brecknell, W.A., *Power Capacitor Handbook*, Butterworth, London (1984).

26

Protection, Maintenance and Testing of Capacitor Units

Contents

26.1 Protection and safety requirements

As discussed in the previous chapters, a capacitor may have to encounter many unfavourable service conditions when in operation. Most of them may lead to its direct overloading. Summing up all such conditions, a capacitor would need protection against the following:

26.1.1 Protection of shunt capacitors

1 *Overvoltage (Section 23.5.1)*

Capacitors become overloaded with overvoltages and long duration of overvoltages may reduce their life. The permissible over-voltages and their safe duration as in IEC 60831-1 for LT and IEC 60871-1 for HT capacitor units are indicated in Table 26.1. An overvoltage factor of up to 10% can be considered on account of this. In installations having wide voltage fluctua-tions and when series capacitors are used on such systems for improving their regulation then the capacitors must be protected against abnormal overvoltages. Overvoltage protection may be provided through an overvoltage relay with inverse time characteristics. For closer monitoring, it is better to have the relay in small steps of 1%.

2 *Number of switching operations*

In LT capacitors controlled through automatic p.f. correction relay it is recommended that the capacitors are not switched more than 1000 times during a year or, say, three or four switchings per day. More switchings will mean more frequent overvoltages and inrush currents which may reduce the life of a capacitor. In HT capacitor banks, however, such a situation may not be relevant as HT capacitors may be switched only once or twice a day.

3 *Overcurrent*

Due to harmonic effects the capacitors are designed for a continuous overloading of up to 30% (Section 23.5.2) and are accordingly rated for $1.3I_c$. Since the permissible capacitive tolerance may enhance the capacitance rating of a capacitor by 1.05–1.15* times its designed rating (Section 26.3.1(1)) the maximum permissible current may be considered up to $1.3 \times 1.15 = 1.5$ times its rated current. A capacitor generally is a fixed current device, its rating is greatly influenced by the circuit parameters, particularly the presence of harmonics and fluctuations in system voltage. Since a capacitor unit is designed for 150% of its nominal rating an overload protection cannot be over-emphasized under normal operating conditions, particularly for an LT installation. For large HT installations, however, experiencing wide voltage fluctuations (which may be rare) and the presence of a large degree of harmonics, it may be mandatory to provide overcurrent protection, even if series reactors are used to suppress the harmonic currents. An IDMT (inverse definite minimum time) relay may be provided with overload and short-circuit protections and a time delay to by-pass the momentary transient and switching inrush currents. Protection against a short-circuit is essential for both LT and HT capacitor units. On LT systems it may be provided through the HRC fuses or the in-built short-circuit releases of a circuit breaker when a circuit breaker is used to switch the capacitor banks. On HT systems short-circuit protection is also provided through HRC fuses or short-circuit releases of the breaker.

4 *Switching currents*

The switching currents must be limited to as low a value as possible. However, in general, capacitors are designed for switching currents up to $100I_C$ (r.m.s.) for milliseconds. If necessary, a series resistance or inductance can be introduced into the switching circuit to limit them to a desired level (Section 23.11).

5 *Short-circuit and ground fault currents*

These will depend upon the grounding system adopted. The level of fault current would generally be as follows:

- For grounded star capacitor units: In this case when a capacitor unit develops a short-circuit it will establish a line-to-ground fault with a high fault current. Use of current limiting HRC fuses will be easy because, for heavy fault currents, the fuses can be selected of a slightly higher rating to avoid an interruption due to switching surges and transient inrush currents without affecting operation of the fuses on an actual fault. However, a fuse free system (Section 12.11) is advisable by using an MCCB.
- For ungrounded star capacitor units: In this case when it causes a line to neutral fault the impedance of the other two phases will limit the fault current to almost three times the rated current. It is still easy to choose HRC fuses so that they would remain inoperative

Table 26.1 Likely overvoltages in service and their permissible durations

	Maximum duration	
Overvoltage factor	*For capacitor units up to 1000 V*	*For capacitor units above 1000 V*
1.00	Continuous	Continuous
1.10	8 h per 24 h	12 h per 24 h
1.15	← 30 min per 24 h →	
1.20[a]	← 5 min →	
1.30[a]	← 1 min →	

[a] Not to occur more than 200 times during the total life span of the capacitor unit.

---

*We have considered the maximum overcurrent factor for illustration. It corresponds to the maximum permissible upper variation in the capacitance value of a capacitor or a bank. One can, however, consider a lower factor depending upon the maximum permissible upper variation for a particular type (voltage and VAr rating) of capacitor unit or bank. A factor of 1.15 is, however, recommended for capacitor duties. See also Section 25.6.

up to 150% of the rated current continuously and operate for a few seconds at 300%. Refer to Figure 21.4 for typical current–time curves of HRC fuses. Use of an IDMT relay with an appropriate setting will also be good practice in such cases.

- For-delta connected capacitor units: In this case, it will establish a line-to-line fault with a heavy fault current. Protection by HRC fuses would be more appropriate than for a grounded star or using an MCCB.
- For series-parallel connected units: This is applicable in HT capacitor banks comprising a number of small units arranged in series and parallel combinations. The fault current in such cases for an isolated neutral can be expressed by

$$I_f = \frac{3N_1 \cdot N_2}{3N_1 - 2} \cdot I_c \qquad \text{(from equation (25.3))}$$

Now also an IDMT relay would provide the most appropriate protective scheme.

To summarize, HRC fuses or fuse-free MCCBs for LT and a breaker and IDMT relay arranged for 2 O/C and 1 G/F, with a short-circuit unit for HT capacitor banks, will provide a reliable protective scheme for short-circuit and ground fault protections.

6 *Shell protection*

This is applicable to both LT and HT capacitors. But it is more important in HT banks, which are relatively much larger and are built of a number of single units connected in series-parallel. These may encounter much higher fault currents in the event of a severe internal fault, even in one unit and are thus rendered more vulnerable to such ruptures. This phenomenon is more applicable to units that are externally protected where the intensity of fault may be more severe, than internally protected units.

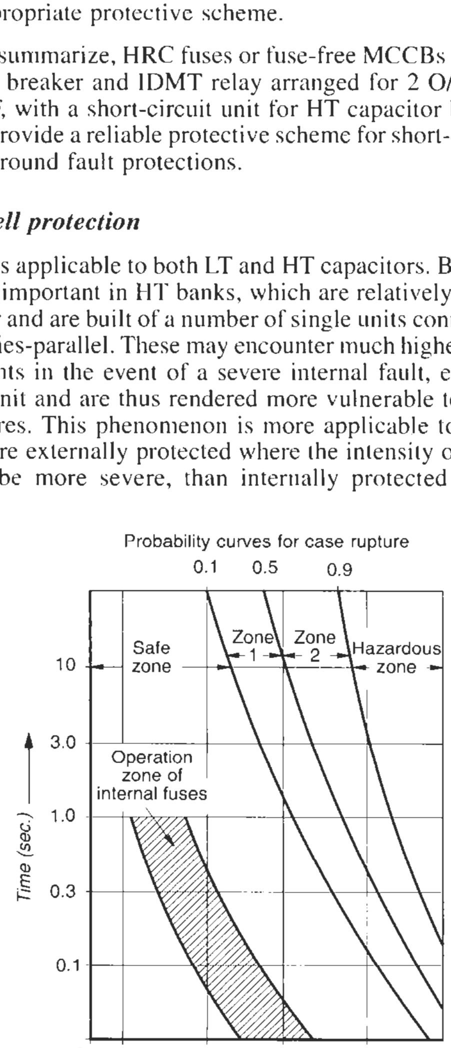

Figure 26.1 NEMA's case rupture curve

Protection with internal fuses is easier, as fuses are provided for each element which can contain the severity of the fault well within the safe zone in all probability. Some users even recommend capacitor units 250/300 kVAr and above with internal fuses only. Figure 26.1 shows a typical operating band of the internal fuses for an internally protected unit. It demonstrates a sufficient margin between the operation of the fuses and the shell's safe zone. The fuse characteristics are almost the same for all manufacturers.

Since such explosions are dangerous and may cause a fire hazard through the dielectric liquid which may be inflammable, it is imperative that such faults are cleared before they may result in bursting of the shell. They will require short-circuit protection. Leading manufacturers producing units suitable for external protection provide a pressure-sensitive disconnector which operates and releases the pressure during a fault when the inside pressure builds up to a preset level. This may be in the form of expandable bellows, which expand on such excessive pressures inside and snap open the power connections. Safety through expansion bellows is usually a feature in LT, MPP capacitors. In HT this technology is not used. NEMA has also provided probability curves for the case rupture in the form of I^2 versus t. The curves are defined in Figure 26.1, which can be used to select the appropriate protection to isolate the unit on a fault before a possible rupture. The severity of fault is expressed in terms of the magnitude of explosion. The protection must be commensurate with the location and the criticality of the installation and is categorized in four zones, depending upon the severity of the fault:

1. Safe zone: There is only a slight swelling of the shell and no severe damage.
2. Zone I: There may be a slight rupture and fluid may leak. Safe for areas where the leakage will pose no hazard.
3. Zone II: There may be a violent rupture of the shell.
4. Hazardous zone: There may be a violent rupture with a blast, which may damage the adjacent units.

Note

The practice adopted by manufacturers, for all voltages and kVAr ratings in the making of the shell, particularly for its size, material and thickness, assume almost the same I^2 versus t characteristics, as provided by the NEMA curves (Figure 26.1).

For a more accurate selection of a protective scheme it is essential that the manufacturers provide the probability curves of their shell design for each voltage and rating.

Generally, the fault must be cleared well within Zone 1 and for which the protective scheme must be chosen. As discussed in Section 25.4.2, protection of capacitor units with external fuses is not easy. It is not practical to contain a mild internal fault as isolation of the units is not possible on mild internal faults until the fault current rises to the level of the fuse's operating range (Figure 26.2 illustrates this). By then enough time will have elapsed to cause severe damage to the unit.

The only solution is to choose fuses of a lower rating as far as possible, with fast operating characteristics (low I^2t) or provide IDMT protection. But the risk of a shell

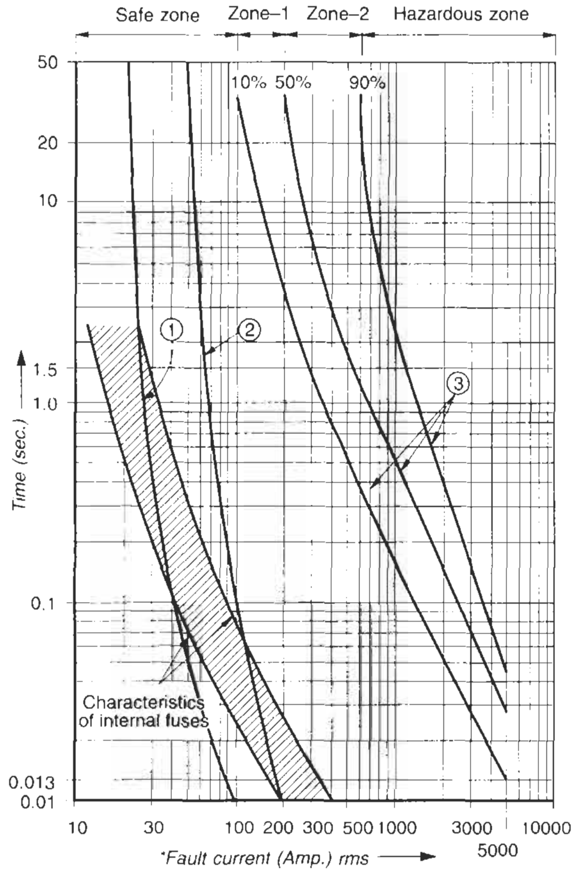

① – Characteristic of a 10A external fuse from Figure 26.3

② – Characteristic of a 16A external fuse from Figure 26.3

③ – Probability curves for case rapture.

* Use asymmetrical rms values for transient faults.

Figure 26.2 NEMA probability curves for a case rupture and selection of internal and external fuses

rupture is not eliminated. An unbalance protection is a better choice in such cases, which may isolate the faulty unit much faster than the fuses. When it is so, the units remain intact. At this stage visual checks can be made to find all such units that may be excessively hot or have bulged out. The capacitance of the units can also be measured to identify the faulty unit(s) or the extent of damage to individual units and take corrective steps before reswitching the units. Example 26.1 illustrates a simple procedure to select external HRC fuses. The fuses are provided separately for each unit.

Example 26.1
Consider the same units as those in Example 25.2 where

V_{ph} of each unit = 11 kV
kVAr = 75
$N_1 = 4$
$N_2 = 8$
$I_c = 6.82$ A
and $I_f = 65.47$ A

Minimum rating of fuses = 200% of I_C

i.e. 2 × 6.82 A or 13.64 A

Select from the manufacturer's catalogue 16 A fuses for each unit, according to the characteristics in Figure 26.2 reproduced in Figure 26.3. The fuse characteristics fall well within the safe zone and provide adequate protection to the units. If series reactors are provided to control the inrush current, a fuse corresponding to 150% of I_C, i.e. of 10 A, would be better to protect the unit more closely. We can see from Figure 26.2 that in an internally protected unit the characteristics of the internal fuses will fall well below that of an external fuse and provide a more exacting protection on a mild fault.

7 *Voltage transients*

These may be caused by internal switchings or external lightning strikes. HT capacitor units, particularly, may be protected through surge arresters against such voltage transients (Chapter 18). The voltage rating of the surge arrester may be chosen on the following basis:

- For ungrounded systems = V_r
- For grounded systems = 0.8 V_r

See also Table 18.2.

8 *Voltage unbalance*

An unbalance in the supply system causes an overvoltage

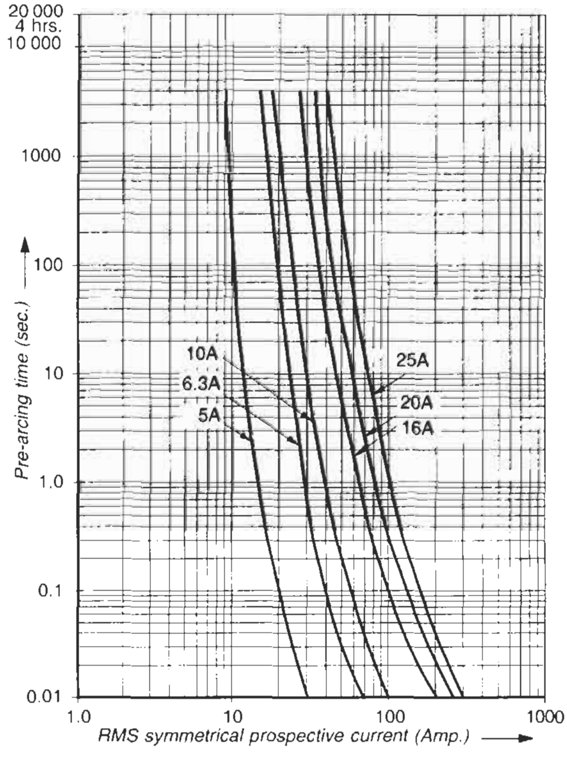

Figure 26.3 Time/current characteristics for 11 kV HRC fuses (Courtesy: GEC Alsthom)

across the capacitor units in phases that have a higher voltage. A partial or total failure of a capacitor unit in a large capacitor bank will also cause an unbalance and an overvoltage across the healthy units connected in parallel. Such a situation is not desirable, and unless detected promptly, may result in a cascade failure of more units. It can be detected by the following methods for an alarm, indication or trip of the entire bank:

(i) Voltage unbalance

This method is applicable to single-star or delta-connected capacitor banks. Unbalance can be detected through the use of an RVT (residual voltage transformer) (Section 15.4.3). See Figure 26.4. The theory of operation is that any unbalance, of the system or the capacitor bank, will shift the neutral and reflect as the residual voltage across the open delta and can be used for the protective scheme. The unbalance voltage across the open delta in the event of failure of a unit in any series group can be expressed by

$$V_u = \frac{N \cdot V_{ph}}{3N_2 \cdot N_1 - 3N \cdot N_1 + 2N} \qquad (26.1)$$

(established by the capacitor manufacturers)

where

V_u = unbalance voltage across the open delta. This is for grounded systems. For isolated systems it will be three times this (Section 15.4.3).

$V_{ph} = \frac{V_1}{\sqrt{3}}$

N = number of units failed

N_1 = number of units in series per group per phase

N_2 = number of units in parallel per group per phase.

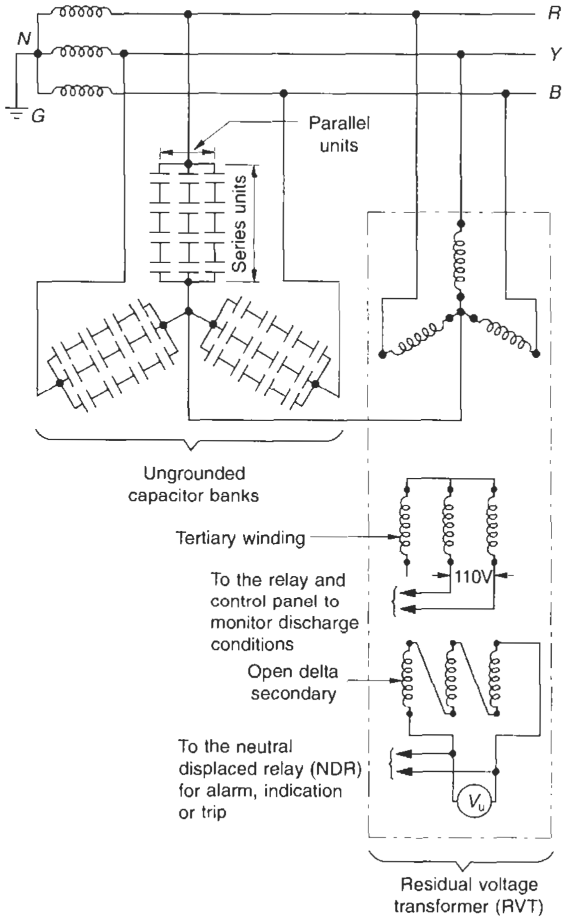

Figure 26.4 Detecting an unbalance in a capacitor bank through a voltage unbalance method

A neutral displacement relay (NDR) with a suitable setting may be used across the open delta for unbalance protection.

Example 26.2

Referring to Example 25.2,

V_{ph} = 44 kV
N_1 = 4
N_2 = 8

Then the unbalance voltage for a grounded system, on a failure of any one unit (assuming the capacitor units to have external type fuses), according to equation (26.1)

$$V_u = \frac{1 \times 44 \times 1000}{3 \times 4 \times 8 - 3 \times 1 \times 4 + 2 \times 1}$$

$$= \frac{44\,000}{86}$$

$$= 511.6 \text{ V}$$

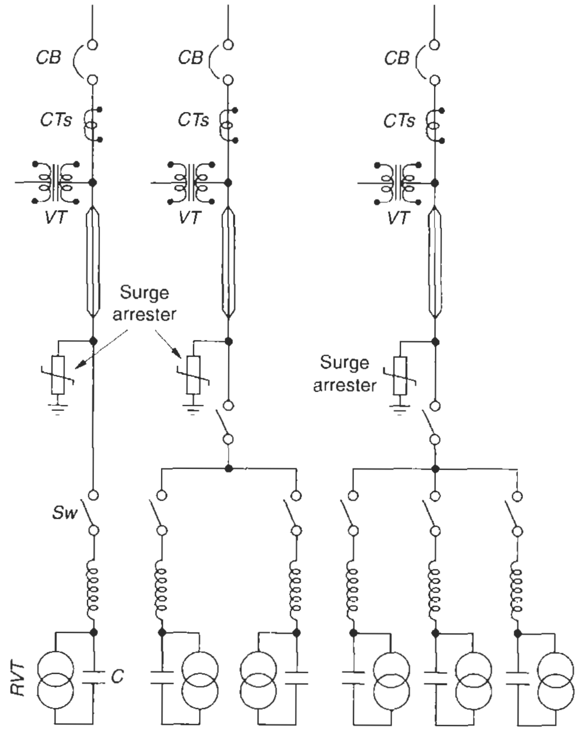

(a) One bank (b) Two banks (c) Three banks

Figure 26.5 The use of RVTs with large capacitor banks and for an ungrounded system

$V_u = 3 \times 511.6 \approx 1535$ V

If the ratio of VT is 44 kV/110 V, then the voltage across the open delta

$$= \frac{1535 \times 110}{44000}$$

$= 3.84$ V

and suitable NDR may be selected for this voltage.

For more than one capacitor bank one RVT for each bank will be necessary for the correct discharge of each bank, (Figure 26.5). An RVT, if provided with an additional star-connected tertiary winding rated for 110 V line to line, can also check the discharge condition and its duration and if it meets the design requirements. This can even be monitored remotely through a relay and control panel.

Note

When an RVT is being used for the purpose of discharge, also no protective fuses are recommended to ensure a positive discharge. On a trip, the RVT is programmed to be connected automatically to the capacitor units to discharge them.

(ii) Current unbalance method

This method is applicable to double-star-connected capacitor banks (Figure 26.6). In this method the neutrals of the two identical star-connected banks are interconnected and a protection Neutral CT (NCT) is inserted through it. In a balanced state, there will be no current through the neutral. On a partial or a total failure of a unit in either of the banks it will disturb the balance and cause a current through the interconnected neutral. A ground fault relay will be most suitable for such a requirement. To avoid momentary transient trippings, a time delay of a few seconds can be introduced into the trip circuit. Sensitivity and the setting of the relay will depend upon the size of the banks and the sensitivity of the system, i.e. whether an alarm or indicator will be sufficient initially while repairs are undertaken during off-peak periods, or whether a trip will be needed. The amount of unbalance current can be determined by the following formula:

$$I_u = \frac{3N \cdot N_2}{6N_2 \cdot N_1 - 6N \cdot N_1 + 5N} \times I_c \qquad (26.2)$$

(established by the capacitor manufacturers)

where I_u = imbalance current through the interconnected neutral, and

I_c = current per capacitor unit.

Note

Current-sensing protection is found to be more accurate than a voltage sensing. It is therefore recommended that the units are arranged in double star as far as possible.

(iii) Ampere meter method

To monitor the health of a capacitor unit it is advisable to provide an ammeter in each phase. When it is found, that there is an unbalance not caused by voltage unbalance then further investigations may be conducted to replace the defective unit(s) before a major fault occurs.

Example 26.3

Considering the earlier Example 25.2 with 14 400 kVAr banks, connected in double star where

$N_1 = 4$

$N_2 = 8$

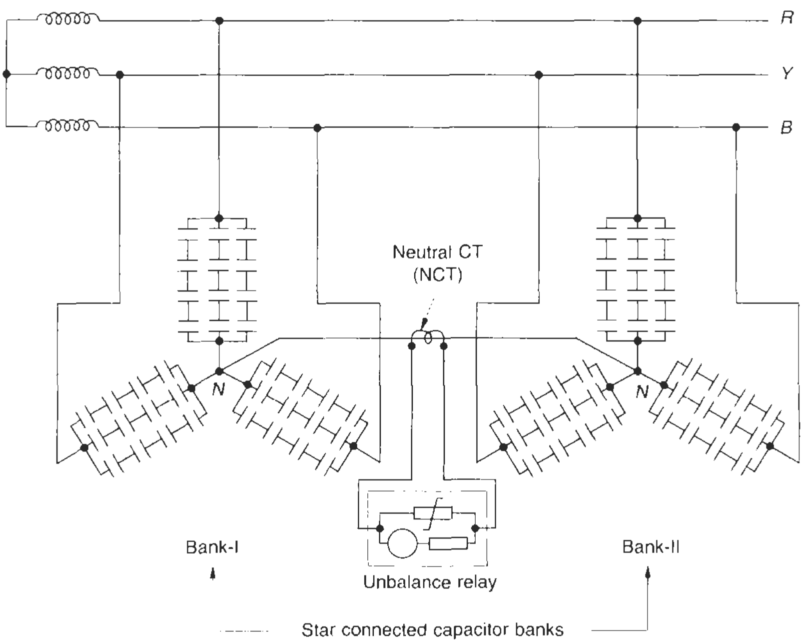

Figure 26.6 Detecting an unbalance in double-star identical capacitor banks through a current unbalance method

Then the overvoltage developed in the event of a failure of any one unit (assuming the capacitor units to have external type of fuses) as determined in the said example

= 10.98%

This overvoltage is higher than permissible. The fault condition must be removed before one full unit fails. Say, we permit only one half of a unit to fail for an alarm and maximum three quarters for a trip. Then overvoltage when one half of the unit has failed from Example 25.2.

= 5.2%

and overvoltage when three quarters of the unit has failed

$$\frac{6 \times \frac{3}{4} \times 4 - 5 \times \frac{3}{4}}{6 \times 8 \times 4 - 6 \times \frac{3}{4} \times 4 + 5 \times \frac{3}{4}} \times 100 = 8\%$$

which is well within the limits for a trip
and I_u for an alarm from equation (26.2)

$$= \frac{3 \times \frac{1}{2} \times 8}{6 \times 8 \times 4 - 6 \times \frac{1}{2} \times 4 + 5 \times \frac{1}{2}} \times 6.82 \simeq 0.45 \text{ A}$$

and I_u for a trip

$$= \frac{3 \times \frac{3}{4} \times 8}{6 \times 8 \times 4 - 6 \times \frac{3}{4} \times 4 + 5 \times \frac{3}{4}} \times 6.82 = 0.69 \text{ A}$$

One can use a 5/1 A CT and provide the desired setting in a 1 A relay for alarm and trip.

9 *Frequency variation and voltage variation*

When capacitors are used to improve the p.f. of a varying frequency load, such as for an inductive heating or varying voltage loads for improving the regulation of a power system, they would be subjected to excessive overloading due to frequency variation in the first case, since kVAr $\propto$ f (equation (23.4)), and voltage fluctuations in the latter. Capacitors performing such duties must therefore be protected, against overloads by an IDMT overload protection scheme.

10 *No-volt protection*

On supply failure capacitors must drop out and should not switch on automatically on resumption of the supply to avoid an overvoltage as a result of the trapped charge. Even sudden voltage dips may cause the charged capacitors discharge into the terminal equipment and damage them. On LT, to achieve the required protection, the capacitors may be switched through contactors which have a no-volt coil and drop out on failure of the supply. On HT an instantaneous undervoltage relay, with a low drop-off value (say, 30–60%) may be used with the interrupting device, which may be a breaker or a vacuum contactor. Reclosing may be through a lockout relay with a time delay, for at least the safe discharge time or less, if the control is by a p.f. correction relay, whose time setting is low and the capacitors are provided with suitable discharge devices.

Figures 26.7 and 26.8 illustrate general layouts respectively for an 11 kV and 33 kV p.f. improvement system with switching and protective devices. Figure 26.9 illustrates a typical layout of a switching and protection scheme for an HT capacitor system, suggesting the recommended switching and protective devices. Based on this, an application engineer can plan a more stronger protective scheme for a particular system.

26.1.2 Protection of series capacitors

Series capacitors are subject to higher voltage variations as a result of generally fluctuating line current. During a fault in the line, such as a short-circuit, the voltage variation across the capacitors may be so high that it may cause an instantaneous failure of the capacitors unless the capacitors are selected for a higher insulation level. IEC 60143-1 for series capacitors suggests that the short-time maximum overvoltage across the capacitors should not exceed 2.15 times the capacitors' voltage rating for 10 seconds. Since an overloading results in an overvoltage, overvoltage protection becomes even more essential. IEC 60143-1 permits a temporary overloading as in Table 26.2 based on which overvoltage protection is provided.

The following are a few common methods for the protection of series capacitors.

1 *Protection against overloads*

For overloading during normal operation, which may be due to load fluctuations or failure of a few capacitor elements, normal overload protection will suffice, as discussed for shunt capacitors (Section 26.1.1(3)). This protection may be provided in conjunction with the line fault protection scheme, discussed below.

2 *Protection against line faults*

There may be a number of ways by which the series capacitors can be protected against line faults. Commonly used methods are briefly discussed below.

(i) Using a dampening circuit
The theory of protection is based on a rapid voltage rise across the series capacitors during a line fault. This voltage rise is used to achieve the required high-impedance requirement of the system during a fault, i.e. restoring the near-natural impedance of the line as if it were without series capacitors. A simple R-L dampening-cum-discharge circuit is illustrated in Figure 26.10. This consists of a resistor and reactor combination, which helps to limit the discharge current and hence the overvoltage across the capacitors during a fault by almost offsetting the capacitor fault current, I_C (fault), with the Inductive current, I_L, through the dampening circuit, i.e. by achieving

$$I_L \simeq I_C \text{ (fault)}$$

This realizes a near-zero or very small fault current through the capacitors and protects them besides restoring the fault level of the system to its original level.

(ii) Connecting a spark gap across the capacitor banks
If a breaker alone is used to bypass the capacitors during a line fault it may fail to discharge its required duty due

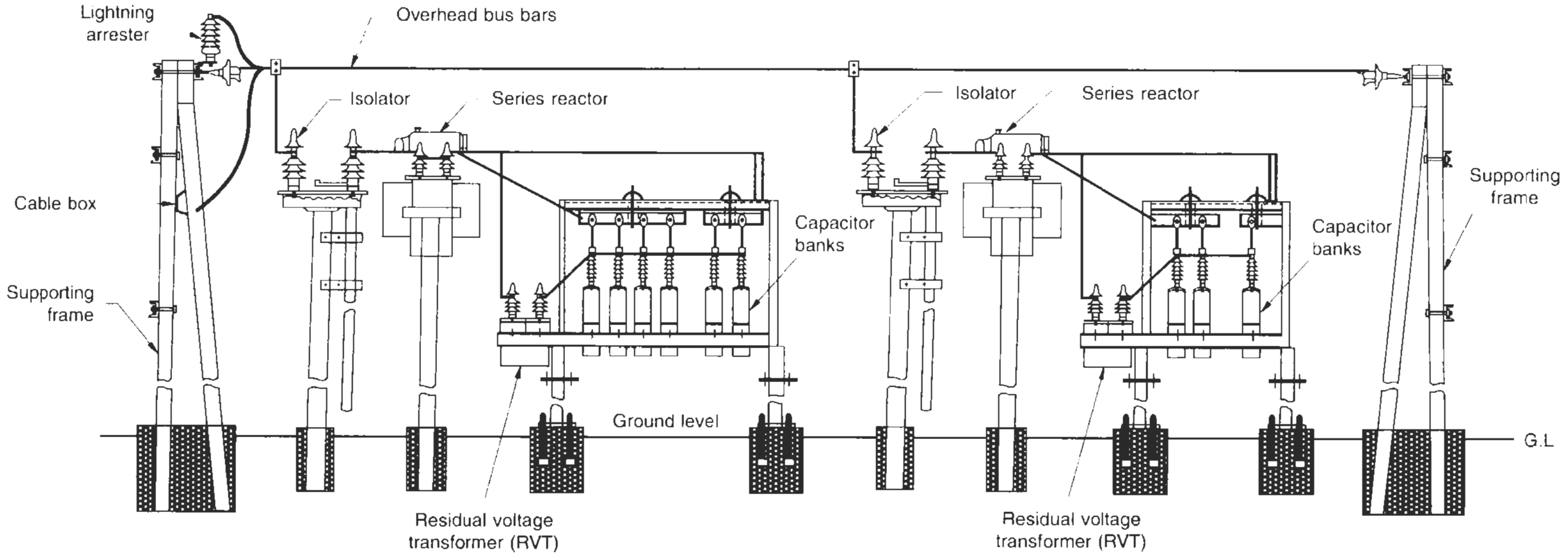

Figure 26.7 Installation of 11 kV capacitor banks and their protective equipment

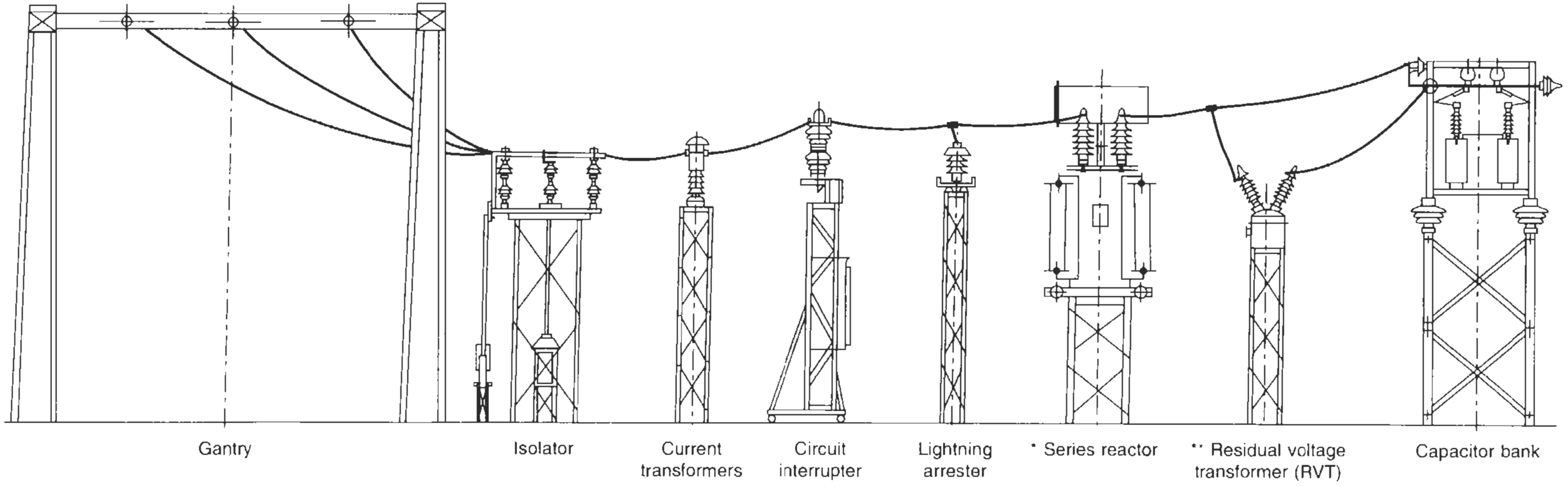

* To limit the inrush and harmonic currents through the capacitor banks.
** For unbalance protection and also for capacitor discharge and measurement if required.

Figure 26.8 Typical layout of 33 kV power factor improvement system with switching and protective equipment

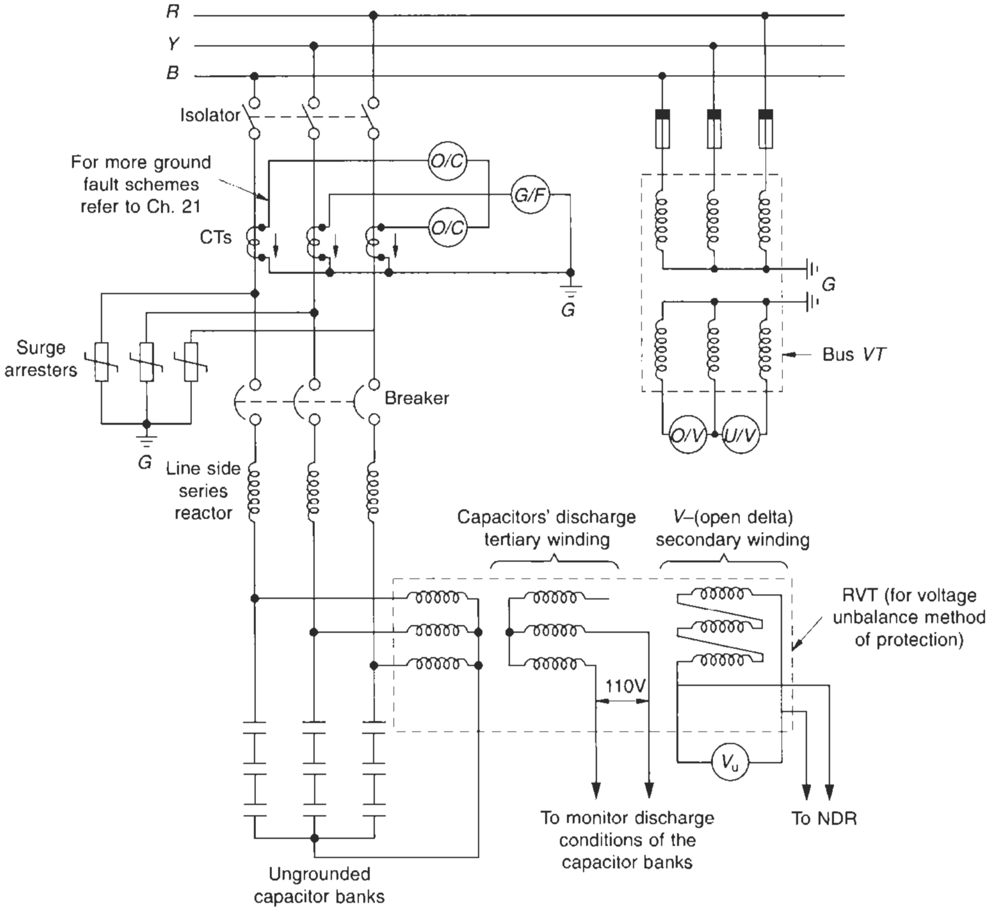

Figure 26.9 Switching and protection scheme for an HT capacitor system

Table 26.2 Permissible momentary overloadings for series capacitors

Times the rated capacitor current	*Duration*
1.10	For 8 h during a 12 h operation
1.35	For 30 min during a 6 h operation
1.50	For 10 min during a 2 h operation

Note: Provided that the average output in a 24 h operation does not exceed the rated output.

to its definite minimum time of closing (Table 19.1). This inherent time delay may be too long to protect the capacitors during a fault. To overcome this, a spark gap is additionally provided across the capacitors, which will spark-over instantaneously at the preset value and limit the fault current to the required level during a fault condition and bypass the capacitors as illustrated in Figure 26.11. Extinction of the arc is achieved by the bypass breaker, which closes soon after (3 to 5 cycles from initiation of the fault).

The excessive line current results in a high voltage drop across the capacitors ($I_{SC} \cdot X_C$), which sparks over the gap generally set at about 2.5 to 3 times the nominal voltage of the capacitors. This high voltage for an extremely short duration will economize on the cost of capacitors. The arc will be sustained only until the fault clears or the line de-energizes or the bypass breaker closes, whichever occurs first. The arc will extinguish at every current zero and attempt to insert the capacitors back into the line. The arc will reappear until the overvoltage attenuates to less than the spark-over voltage, or the line de-energizes or the bypass breaker closes. The capacitors must therefore be suitable to withstand repeated transient voltages developed during each arcing.

A CT is provided in series with the spark gap to sense its operation during a line fault. As soon as there is arcing, it provides an instantaneous command to a short-circuit relay. The relay, in turn, closes the bypass breaker, within 3 to 5 cycles, leaving only the natural line impedance in the faulty circuit. Now $X_C = 0$, which limits the fault current to the natural level of the system, as if the capacitors were not connected. The shorting device is restored to its original status as soon as the fault condition is cleared. The device must be capable of interrupting the line fault

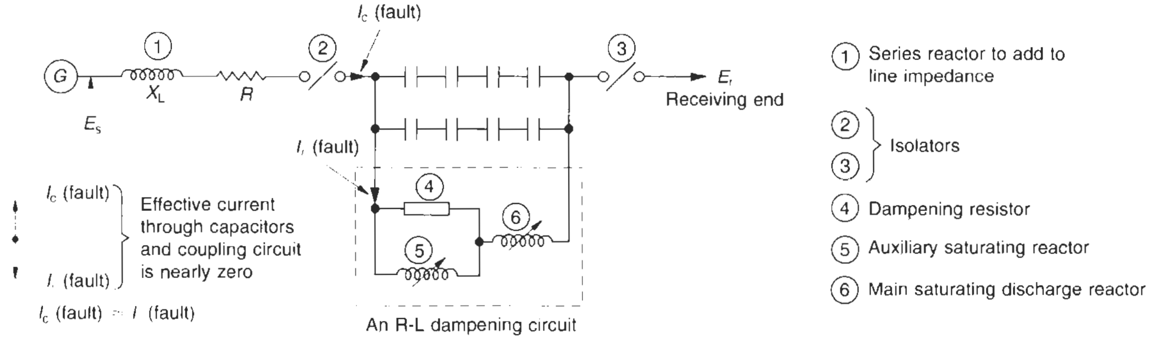

Figure 26.10 Dampening circuit across the series capacitors to limit the fault level

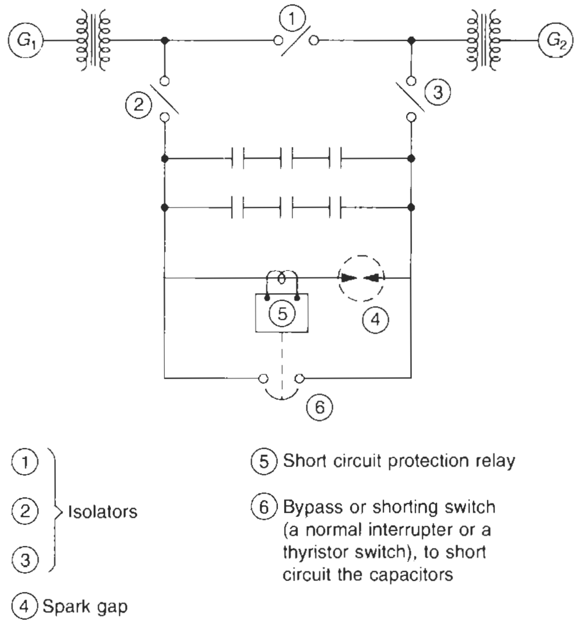

Figure 26.11 Overvoltage protection with the help of a spark gap and a shorting switch

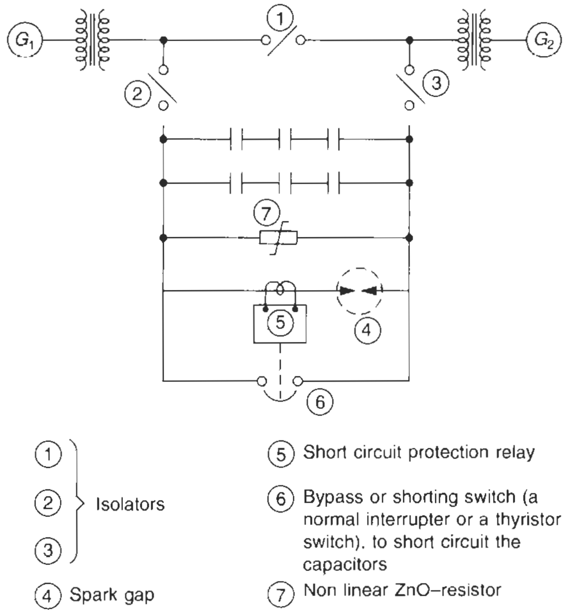

Figure 26.12 Overvoltage protection with the help of a ZnO resistor, spark gap and a shorting switch

current without a restrike. The scheme serves a dual purpose by providing necessary protection to the capacitors, on the one hand, and restoring the line natural impedance (i.e. the original fault level) by short-circuiting the capacitors, on the other.

Rapid reinsertion of the capacitors as soon as the fault conditions are removed is an important requirement to retain the stability of the system. This can be achieved with the use of an additional ZnO, non-linear resistance (ZnO being the latest in this field compared to SiC, which was used earlier), across the capacitor banks (Figure 26.12). Generally, the ZnO resistor will be adequate to dampen the fault current without initiating the spark gap, and will limit the overvoltage across the capacitors. It will also permit automatic reinsertion of the capacitors as soon as the fault conditions are removed without causing a delay. The spark gap will serve as a backup to the ZnO resistor in the event of very severe faults.

The above bypass facility can also be achieved with the use of a thyristor switch, which may be made current sensing or voltage sensing.

26.2 Installation and maintenance of capacitor units

The following are suggestions for the successful operation of the capacitor units installed on an LT or an HT system:

1 Overheating shortens the life of a capacitor. Adequate ventilation and cooling facilities, through convection and radiation, must be made available at the place of installation. When housed inside a cubicle, as in a capacitor control panel and in a tier formation, sufficient space must be provided between each unit. Adequate

ventilation facilities should also be provided, either louvres, exhaust fans or by providing an expanded metal enclosure, for the capacitors to ensure a free air circulation around each capacitor unit (Figure 23.32).

2 Concentration of capacitor banks at one point in a system may cause amplification of harmonics, self-excitation of machines, overvoltages due to switching and unsatisfactory working of audiofrequency remote-control apparatus. To overcome this, a concentration of capacitor banks at one point must be avoided as far as possible. These may be installed at different locations in the system.

3 A loose contact within the circuit, producing sparks, will generate high-frequency oscillations (harmonics). However small these oscillations are, they may raise the system voltage and frequency. High-frequency oscillations will also reduce the impedance of the capacitors $x_{\mathrm{ch}}\ \alpha\ 1/f_{\mathrm{h}}$ and cause high currents, leading to premature failure of the capacitors. Loose contacts must therefore be thoroughly checked. It is recommended that a capacitor circuit particularly be checked periodically for loose connections or sparkings.

4 When the reactive control is not automatic, then during offpeak periods (such as during the night) it is important that some of the banks are dropped manually to avoid an overcompensation and a consequent overvoltage.

5 It is advisable to periodically check the condition (i.e. the capacitance value C) of each capacitor unit to detect failure of one or more of them and the consequent overvoltage across the healthy units. This can be measured by any of the methods discussed in Section 26.3.1(1). The capacitance value of each unit must fall within the permissible limits as indicated in that section. The failed units, if any, must be replaced promptly with units of the same rating and brand to avoid any performance variation. If this is not possible then the banks must be balanced by readjusting the units. When the banks are connected through a series reactor, the value of the reactor must also be readjusted to match changed parameters. Otherwise the reactor may resonate with the fifth or the seventh harmonic, for which it is designed, and cause an overvoltage.

26.2.1 Precautions in handling a capacitor unit with PCB

Although the manufacture of PCB-filled capacitor units has been discontinued, for older installations some may still be used. For the benefit of their users we give below the precautions that they must take when handling these units:

- Do not inhale the vapour of this chemical.
- Avoid its contact with eyes and skin.
- Avoid its contact with birds and animals.
- Avoid its contact with animal feed.
- Do not re-use contaminated paper and cloth.
- In the event of contact with the human body, wash the skin with soap and water and the eyes with clean running water.
- Avoid any spillovers, leakage or vaporization of liquid or disposal of a waste unit. One can use Araldite, solder or any other means to stop a leakage. If this is not possible, collect carefully all the chemical PCB and carefully dispose it of.
- Soaked rags, cloth or papers, must be destroyed in an incineration plant at 1000°C. Disposal at a landfill area is not advisable for during rain they may be carried by storm drains into rivers, canals or ponds.
- Old units should not be sold to a scrap dealer for similar reasons.

26.3 Test requirements

Below we discuss briefly recommended tests on a finished capacitor unit based on various IEC recommendations. For standards refer to the list provided at the end of the chapter.

26.3.1 Routine tests

Routine tests are carried out on each capacitor unit.

(1) Capacitance measurement

This is to be determined at rated voltage and frequency and can be carried out between 0.9 to 1.1 times the rated voltage and 0.8 to 1.2 times the rated frequency. Permissible tolerances in capacitance from the declared values can be as follows:

- **For LT capacitor units up to 1000 V** For both self-healing and non-self-healing types:
  5% to + 10% for units and banks up to 100 kVAr
  5% to + 5% for units and banks above 100 kVAr.
- **For HT capacitors**
  5% to + 15% for capacitor units or banks containing one unit per phase
  5% to + 10% for capacitor banks less than 3 MVAr
  0% to + 10% for capacitor banks from 3 MVAr to 30 MVAr
  0% to + 5% for capacitor banks above 30 MVAr.
- **For series capacitors**
  These are usually HT capacitor units/banks:
  ±7.5% for capacitor units or banks containing one unit per phase
  ± 5% for capacitor banks less than 30 MVAr
  ±3% for capacitor banks 30 MVAr and above.

Methods to determine the capacitance of a capacitor unit
Two common methods to determine this are:

- Voltage method and
- Bridge method.

In the voltage method the normal voltage is applied across the capacitor terminals and line current, I_c, is measured. The value of capacitance, C, can be determined from the equations provided in Section 23.5.2. In the bridge method

Table 26.3 Power frequency test voltages and their duration for voltage tests on a power capacitor unit or bank

Description	*LT capacitors up to 1000 V*				*HT capacitors above 1000 V*			
	Routine test		*Type test*		*Routine test*		*Type test*	
	Test voltage	*Duration*	*Test voltage*	*Duration*	*Test voltage*	*Duration*	*Test voltage*	*Duration*
(i) Voltage test between terminals	2.15 V_r[a]	2 s	2.15 V_r[a]	10 s	2.15 V_r[a]	10 s	–	–
(ii) Voltage test between terminals and container					For lightning impulse withstand voltage refer to Table 26.4			
(a) for rated voltage ≤ 660 V	3 kV	10 s	3 kV	1 min				
(b) for rated voltage > 660 V	6 kV	10 s	6 kV	1 min				

[a] V_r = rated voltage

Notes

1 For a repeat test, only 75% of the test voltage must be applied.

2 The above tests refer to dry power frequency voltage withstand tests for indoor units. Outdoor capacitor units will be subjected to a wet test as in IEC 60060-1.

the capacitance is measured directly through a capacitance meter.

Note

The values thus obtained will be accurate when the system is free from harmonics. If harmonics are present in the system correction will be necessary for both V and f, as in equation (23.5).

(2) Measurement of capacitor loss in terms of tan δ

Tan δ is a measure of dielectric loss in a capacitor unit and is represented by the ratio of equivalent series resistance and capacitive reactance of a capacitor unit at the rated voltage and frequency (Figure 9.7) i.e.

$$\tan\delta = \frac{R}{X_c}$$

where equivalent series resistance, R, is the virtual resistance which, if connected in series with an ideal capacitor unit of capacitive value equal to that of the capacitor under reference, will have a power loss equal to the active power dissipated in that capacitor under specified operating conditions.

The test can be performed at voltages and frequencies, as noted in (1) above. The value of tan δ should not exceed the declared value.

(3) Voltage test between terminals

Every capacitor unit will be subject to an a.c. test at a voltage specified in Table 26.3 at a frequency between 15 and 100 Hz, preferably as close to the rated as possible. During the test no permanent puncture or flashover should occur.

(4) Voltage test between terminals and container

The test procedure and test performance should be the same as noted in (3) above except the test voltages, which will be as specified in Table 26.3.

(5) Test for the internal discharge device

This is required to determine the suitability of the resistance of the discharge device to ensure that it discharges a charged capacitor unit or bank at $\sqrt{2}\ V_r$ to 50 V or less in 1 minute in LT and in 10 minutes in HT shunt capacitor units or banks and in 5 minutes in series capacitors. The arrangements of discharge devices are illustrated in Figure 25.8.*

(6) Scaling test

This is required to check the leakage of the capacitor dielectric during long operations. It is carried out by heating the unit uniformly on all sides, at least 20°C higher than the maximum ambient temperature of the capacitor unit, for at least 2 hours. There should be no leakage.

26.3.2 Type tests

(1) Thermal stability test

This is another name for a heat run test. A voltage sufficient to cause an output of the capacitor unit equal to 1.5 times the rated output is applied at the rated frequency and test conducted for at least 48 hours. During the last six hours of the test the temperature rise and tan δ are measured at least four times. The temperature rise during the last six hours should not exceed 1°C, otherwise the test duration must be extended until the temperature stabilizes to a rise of only 1°C. The final test results

---

*These figures are only indicative, as different countries may specify different discharge voltages and discharge times. For instance, various IEC Standards mentioned at the end of the chapter specify the discharge voltage as 75 V, reached in 3 minutes in LT and 10 minutes in HT shunt as well as series capacitors. When required for fast switching operations, special discharge devices are sometimes employed to achieve a faster discharge, as discussed in Section 23.17.

compared to the measurement taken at the start of the test should not vary by more than the following:

- **For capacitance value**
  For LT units: 2% of its capacitance value
  For HT units: The two test values should be corrected to the same reference of dielectric temperature, say, 20°C or as agreed. The difference between the two test values should be less than an amount corresponding to either breakdown of an element or operation of an internal fuse.
- **For tan δ value**
  For LT units: 2×10^{-4}
  For HT units: 1×10^{-4} or as agreed between the manufacturer and the user.

(2) Measurement of capacitor loss in terms of tan δ

This is the same as for the routine test

(3) Voltage test between terminals

This is similar to the routine test (4) except the duration of the test, which should be as specified in Table 26.4.

(4) Voltage test between terminals and container

This is similar to the routine test (4) except the duration of the test, which would be as specified in Table 26.4.

(5) Lightning impulse voltage test between terminals and container

The test should be conducted generally with a wave of 1.2 to 5/50 μs as illustrated below:

- **For LT units:** Three impulses should be applied of positive polarity followed by three of negative between the terminals joined together and the container.
- **For HT units:** Fifteen impulses should be applied of positive polarity followed by fifteen of negative between the bushings joined together and the container.

The value of the first peak of the test wave is specified in Table 26.4. During the test there should be no rupture or flashover at any part of the unit, which should be verified by a cathode ray oscillograph. An oscillograph should also be used to record the voltage and check the wave shape.

(6) Short-circuit discharge test

The unit should be first charged by d.c. and then discharged through a gap situated nearby. The test voltages should be as follows.

For LT units

- **Star-connected units** Test voltage $4V_r/\sqrt{3}$. The test should be carried out between any two terminals, leaving the third open.
- **Delta-connected units** Test voltage $2V_r$. Any two terminals of the unit should be shorted and the test conducted between the third and the shorted terminal.

For HT units

The test voltage should be 2.5 V_r, irrespective of star- or delta-connected units. The capacitor unit should be charged with the test voltage and discharged five times within 10 minutes. Within 5 minutes after the test the unit may be subjected to voltage test (3) between the terminals. The

Table 26.4 Insulation levels for power capacitor units

Highest voltage for equipment	*Rated lightning impulse withstand voltage*		*Rated power-frequency short-duration withstand voltage for voltage test*		
	List 1	*List 2*		*Duration*	
$kV_{r.m.s.}$	kV_{peak}	kV_{peak}	$kV_{r.m.s.}$	*Routine test*	*Type test*
up to 0.66	—	15	(Refer to Table 26.3)	↑	↑
0.66 to 1.0	—	25			
1.2	—	25	6		
2.4	—	35	8		
3.6	20	40	10		
7.2	40	60	20	10 s	1 min
12	60	75	28		
17.5	75	95	38		
24	95	125	50		
36	145	170	70	↓	↓

Notes

1 For a repeat test only 75% of the test voltage must be applied.
2 The power frequency voltage test refers to indoor units. The outdoor capacitor units must be subjected to a wet test as in IEC 60060-1.
3 The choice between list 1 and list 2 will depend upon the extent of exposure of the units to the internal and external voltage surges and the amount of surge protection, if provided.
4 It will also depend upon the condition of system grounding, i.e. whether effectively grounded, non-effectively grouned or isolated neutral etc. For systems other than effectively grounded, list 2 must be preferred.
5 For higher voltage systems, refer to the relevant Standards noted in the table of Standards provided at the end of the chapter.

capacitance of the test unit may be measured before the discharge test and after the voltage test. The capacitance values thus measured should not be exceeded by more than 2% or breakdown of an element or blowing of an internal fuse.

(7) Partial discharge test (applicable to HT units)

There are invariably voids that will appear in an insulating system as a matter of process, irrespective of the type and procedure of impregnation adopted, as discussed in Section 9.6.1. For all practical purposes, a dielectric system may therefore be considered to be an imperfect capacitor. All such voids may cause internal discharges and lead to erosion and ultimate failure of the dielectric under the effect of the applied voltage. The applied voltage may be fluctuating too, aggravating the situation. This test is conducted to check the condition and suitability of the dielectric used to perform the required duties in service without causing an undue discharge (ionization). It is a means of detecting defects in the insulating system of a capacitor unit and is complementary to a dielectric test.

To perform this test, the rated voltage may be applied long enough for thermal equilibrium to be achieved. Then a test voltage of twice the rated voltage is applied only once for one second. The voltage is then reduced to 1.2 times the rated voltage and maintained for 10 minutes and then it is raised again to 1.5 times the rated voltage for 30 minutes. During the last 10 minutes, the discharge under such conditions should be less than 50 pc (pico-coulombs). The capacitance should be measured both before and after the test. The change in capacitance should not exceed 2%.

One will appreciate that such tests are no guarantee of the minimum life of a capacitor unit. Moreover, it is not expected that such tests can predict the future of the capacitor units. They can, at best, suggest the compliance of the test requirements which should ensure a reasonably prolonged operating life of the capacitors, as envisaged. These tests do provide feedback to the manufacturer on the quality of the dielectric and the process of insulation adopted and if any improvements are required.

(8) Endurance test (process test for HT capacitors)

This is an alternative to the ageing test and is applicable for shunt capacitors of 1000 V and above. It is an in-house process test and is carried out on the capacitor elements before they are assembled into a capacitor unit to ascertain their dielectric stability against repeated over-voltages. For the test procedure refer to IEC 60871-2.

(9) Ageing test (applicable to LT units)

This test is conducted to estimate the working life of a capacitor. Briefly, the test can be conducted in three stages as follows:

(a) The capacitor is energized at 1.25 times the rated voltage for 750 hours.
(b) It is then subjected to 1000 discharges.
(c) After test (b), the test in (a) is repeated.

On conclusion of the test no permanent breakdown or flashover should be observed. The variation in the capacitance value as measured before and at the end of the test should not vary by more than 3%. The capacitor unit should withstand the voltage test between the terminals and the container as stated in test (4) above and the sealing test as in test (6) under routine tests.

(10) Self-healing test

This test is applicable to LT capacitors only, which are the self-healing type. The capacitor is subjected to a voltage of 2.15 V_r, for 10 seconds. If fewer than five breakdowns occur during this time, the voltage may be increased slowly until it reaches 3.5 times its rated value, or five breakdowns, whichever happens first. If five breakdowns have still not occurred, the test is continued until they do. The capacitance measured before and after the test should show no significant change.

(11) Destruction test

This test is also applicable to LT capacitor units only. The basic objective is to establish that the failure of a unit is within a safe zone and is not accompanied by the risk of a violent explosion or fire.

These are only brief descriptions of the recommended tests and their procedures on a completed capacitor unit. For more details refer to the table of Standards provided at the end of the chapter.

26.3.3 Checking field operating conditions

On larger installations, particularly, it is recommended that the actual operating conditions be checked and compared with the assumed conditions for which the capacitor units were designed to ensure that they do not differ by more than the permissible limits. This is because a capacitor is highly susceptible to some operating conditions such as fluctuations in voltage and harmonic contents in the system. An excess of any of these or both V and V_h may shorten the life of the capacitor units and cause frequent failures of individual units. It may also lead to overvoltages across the units and increase harmonic contents. All this may cause failure of the capacitor units, leading to even a cascade failure, increasing the unbalance in voltage and kVAr across each phase and destabilize the entire capacitor network.

The effect of voltage and voltage fluctuations can be checked through the capacitor line current, I_c, which is a measure of the capacitance C of the capacitor units. The capacitor current must correspond to the designed (rated) current plus the permissible variation. A higher current than this would mean a voltage variation or the presence of harmonics in the system or both. While the voltage may be measured through a voltmeter and the current through an ammeter in the three lines, the harmonics content may be checked by an oscilloscope. If the actual operating conditions differ from the designed parameters by more than is permissible, suitable measures will be essential to restore the operating conditions within the permissible limits, say, by providing series reactors or filter circuits in the system as discussed already.

Relevant Standards

IEC	*Title*	*IS*	*BS*
60060-1/1989	High voltage test techniques – General definitions and test requirements	2071-1/1993	BS 923-1/1990
60060-2/1994	High voltage test techniques, measuring systems	2071-2/1991 2071-3/1991	BS EN 60060-2/1997
60071-1/1993	Insulation coordination. Definitions, principles and rules	2165-1/1991	BS EN 60071-1/1996
60143-1/1992	Series capacitors for power systems General performance, testing and rating. Safety requirements. Guide for installation	9835/1991	BS EN 60143-1/1993
60143-2/1994	Series capacitors for power systems Protective equipment for series capacitor banks	—	BS EN 60143-2/1995
60831-1/1996	Shunt power capacitors of the self healing type for a.c. systems having rated voltage up to and including 1000 V General performance, testing and rating. Safety requirements. Guide for installation and operation	13340/1993	BS EN 60831-1/1998
60831-2/1995	Shunt power capacitors of the self healing type for a.c. systems having rated voltage up to and including 1000 V Ageing test, self-heating test and destruction test	13341/1992	BS EN 60831-2/1996
60871-1/1997	Shunt capcitors for a.c. power system having rated voltage above 1000 V (non-self-healing type) } General performance, testing and rating – Special requirements – Guide for installation and operation	13925-1/1998	BS EN 60871-1/1998}
60871-2/1987	Shunt capacitors for a.c. power system rated voltage above 1000 V (non-self-healing type) Endurance testing	13925-2/1994	BS 7264-2/1990
60931-1/1996	Shunt power capacitors of the non-self healing type up to and including 1000 V General, performance, testing and rating. Safety requirements. Guide for installation and operation	13585-1/1994	BS EN 60931-1/1998
60931-2/1995	Shunt power capacitors of non-self healing type up to and including 1000 V Ageing test and destruction test	13585-2/1998	BS EN 60931-2/1996

Relevant US Standards ANSI/NEMA and IEEE

IEEE 4/1995	Standard techniques for HV testing
IEEE 1313.1/1996	Insulation coordination, Definitions, principles and rules
ANSI/IEEE 18/1993	Standard for shunt power capacitors
ANSI/IEEE C.37.90.1/1989	Guide for surge withstand capability tests, for protective relays and relay systems
NEMA-CP1/1992	Shunt capacitors, both LT and HT
NEMA CP-9/1992	External fuses for shunt capacitors
NEMA	Probability curves

Notes

1 In the tables of Relevant Standards in this book while the latest editions of the Standards are provided, it is possible that revised editions have become available. With the advances of technology and/or its application, the updating of Standards is a continuous process by different Standards organizations. It is therefore advisable that for more authentic references, readers should consult the relevant organizations for the latest version of a standard.

2 Some of the BS or IS standards mentioned against IEC may not be identical.

3 The year noted against each standard may also refer to the year of its last amendment and not necessarily the year of publication.

List of formulae used

Voltage unbalance

$$V_u = \frac{N \cdot V_{ph}}{3N_2 \cdot N_1 - 3N \cdot N_1 + 2N} \tag{26.1}$$

V_u = Unbalanced voltage across the open delta. This is for grounded systems. For isolated systems, it will be three times this

$$V_{ph} = \frac{V_1}{\sqrt{3}}$$

N = number of units failed
N_1 = number of units in series per group per phase
N_2 = number of units in parallel per group per phase

Current unbalance

$$I_u = \frac{3N \cdot N_2}{6N_2 \cdot N_1 - 6N \cdot N_1 + 5N} \times I_C \tag{26.2}$$

I_u = Unbalanced current through the interconnected neutral
I_c = current per capacitor unit

Further reading

AIEE Committee, *Report of a Survey on the Connection of Shunt Capacitor Banks*, **Report,** Vol. 77, pp. 1452–58, Feb. (1959).

Central Board of Irrigation and Power, India, *Manual on Shunt Power Capacitors – Operation and Maintenance*, Technical Report No. 33, Jan. (1984).

Longland, T., Hunt, T.W. and Brecknell, W.A. *Power Capacitor Handbook*, Butterworth, London (1984).

27

Power Reactors

Contents

27.1 Introduction

Power reactors are similar to transformers. However, they have only one winding per phase and can be represented as shown in Figure 27.1. They are employed to perform a number of functions, primarily to control and regulate the reactive power of a power system by supplying the inductive and absorbing the capacitive power. Control can be achieved in different ways as noted later. The reactors, depending upon their design and I-ϕ characteristics, can be classified as follows:

1 **Single- or three-phase** Single-phase reactors are used in the neutral circuit either to limit the ground fault currents or as arc-suppression coils (Section 20.5). Similarly, three-phase reactors are used for three-phase applications.
2 **Air-cooled dry type and oil-immersed type** This will depend upon the size of the reactor and the design of the manufacturer. The latest practice is to use air-cooled dry type, which call for lesser maintenance and are free from any fire hazards.
3 **Indoor or outdoor types** These may be designed indoor or outdoor types depending upon the application.

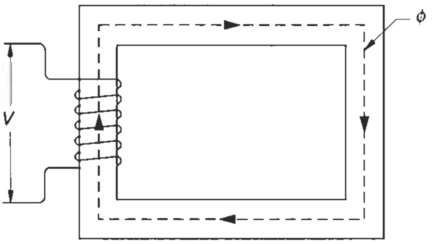

Figure 27.1 General representation of a reactor

4 **Tap-changing facility** Where necessary, the reactance of the coil can be varied by providing an on- or offload tap-changing gear with the reactor, similar to a power transformer.

27.2a Selection of power reactors

When it is required to limit the inrush current a fixed reactance (linear) reactor is more suitable. A variable type reactor will be necessary when it is to be used for voltage regulation or load sharing. In circuits where harmonics may be present, saturated type reactors may be preferred.

The harmonic content may be measured through harmonic analysers and expressed as a percentage of the fundamental component. The current and voltage ratings of the reactors will depend upon their application. A series reactor connected permanently in the circuit, for instance, will be rated continuously and for full system voltage, whereas a reactor used in the ground circuit may be short-time rated and rated for the likely maximum ground fault current.

27.2b Magnetic characteristics

The magnetic characteristics of an inductor coil will vary with the type of its configuration as discussed below. It can have one of the following shapes:

- Linear (Figure 27.2(a))
- Non-linear (Figures 27.2(b1) and (b2))
- Saturated (Figure 27.2(c))

A reactor can be designed to provide any of these characteristics to meet the different reactive power needs.

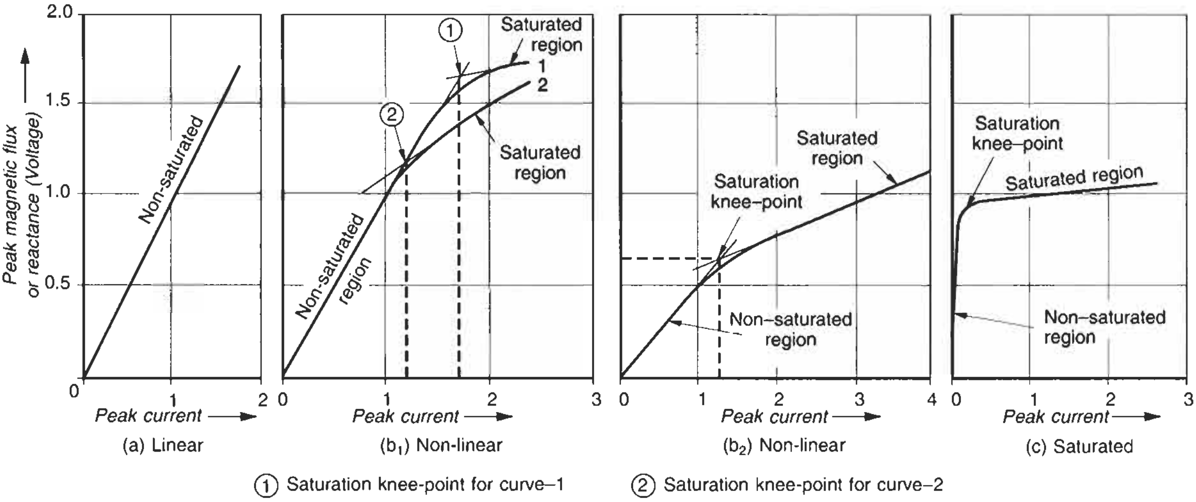

Figure 27.2 Magnetic characteristics of a reactor

27.3 Design criterion and I-ϕ characteristics of different types of reactor

27.3.1 Air-cored or coreless type reactors

These reactors are made of copper winding without any core, similar to an air-cored solenoid, as shown in Figure 27.3. In the absence of an iron core it causes a large amount of leakage flux in the space, which may also infringe with the metallic tank housing the reactor, and affect the reactance of the coil, in addition to heating the tank itself. It is therefore important to provide some kind of shielding between the winding of the reactor and the tank. The shielding can be magnetic or non-magnetic as discussed later. With shielding, the characteristics of an air core reactor can be altered according to its application. Such reactors provide linear I-ϕ characteristics in the operating range, say, up to 150% of the rated current as shown in Figure 27.2(a). In the absence of an iron core, there is no saturation of the core. These reactors are more useful when they are required to be used as current limiting devices. But they reduce the steady-state power transfer capability (V_1^2/Z) of the system, as discussed in Section 24.8.

With magnetic shielding

A magnetic circuit develops a stray magnetic field around it. A reactor, which is a magnetic circuit, at higher currents such as during switching operations or faults will develop high magnitudes of stray fields around it that may link magnetic objects in the vicinity and cause high induced e.m.f.s in them, as in nearby metallic structures and electrical apparatus. All this may result in high circulating currents and consequent heating. In addition, it may also affect the working and performance of the measuring and indicating instruments connected on the system. To reduce such an effect a magnetic frame made of steel laminations and rigidly clamped to suppress vibrations and noise (magnetostriction effect) is provided around the inductor coil, as illustrated in Figure 27.4. This frame will arrest most of the space magnetic field within the close vicinity of the reactor. The field produced by the coil will link the iron frame and would be almost used up in magnetizing it. The steel frame is called the magnetic shield. The self-inductance of the coil, L, is now much less affected. The flux density of the core is designed so that it does not saturate up to 150% of the rated current.

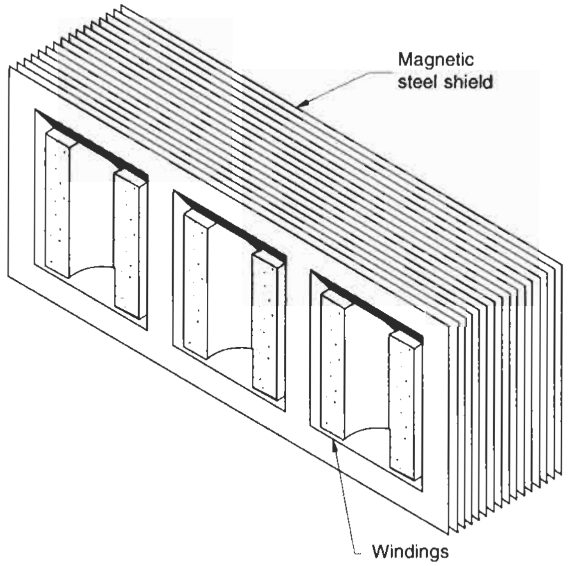

Figure 27.3 Three-phase 'air-cored' magnetically shielded reactor

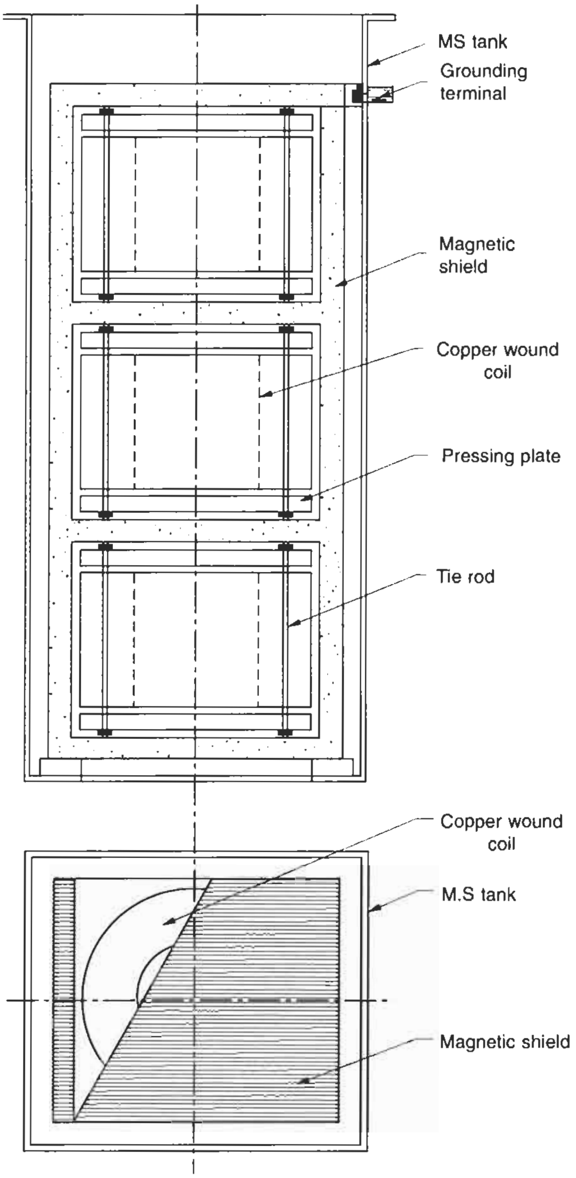

Figure 27.4 Sectional view of a magnetically shielded reactor

Any increase in the fundamental value of the current beyond 150%, or a voltage drop across the coil of more than 150% of the reactor voltage (this may occur in the presence of harmonics) may, however, saturate the core and reduce the reactance of the coil. Magnetically shielded reactors therefore have limitations when the system harmonics are high or when linear *V-I* characteristics are desirable beyond 150% of the rated fundamental current.

The need for a magnetic shielding is greater in high current reactors than in smaller ratings. For more details on magnetic shielding see Section 28.2.2 on segregated phase bus systems.

With non-magnetic shielding

In non-magnetically shielded reactors a cylindrical shield of non-magnetic material, such as aluminium or copper, is provided around the inductor coil instead of a magnetic material (Figure 27.5). Since there is no iron path for the magnetic field, the coil now may not maintain a constant inductive reactance, as in the case of magnetic shielding. Instead, it may become reduced with an increase in the current due to a counterfield generated in the coil by the non-magnetic shielding.

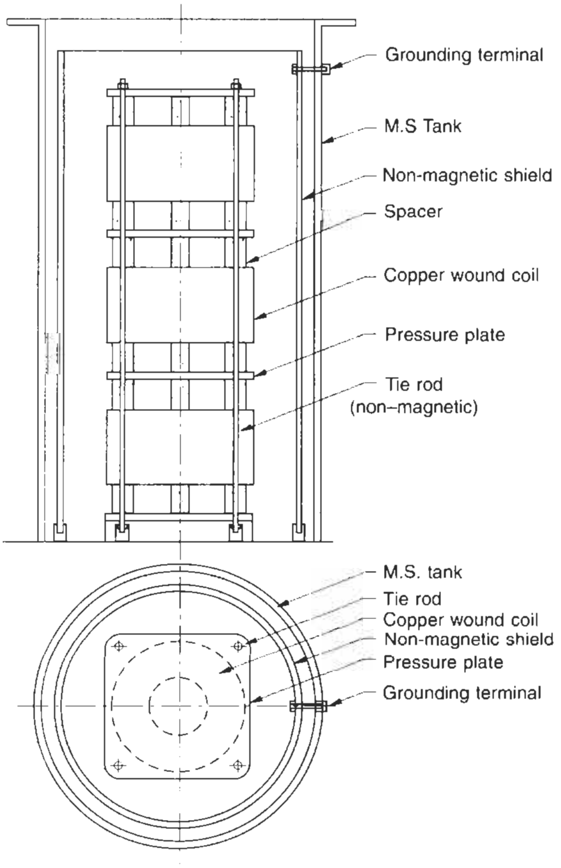

Figure 27.5 Sectional view of non-magnetically shielded reactor

For the theory of neutralization of the magnetic effect on the conductor in a non-magnetic shielding, refer to the continuous enclosures for isolated phase bus systems discussed in Section 31.2.2. As a result of non-magnetic shielding there will be no saturation of the iron core and the *V-I* characteristic of the reactor will remain almost linear.

These types of reactors can now be used as current limiting reactors and also as harmonic suppressors. They are also recommended for capacitor application due to their linear characteristic which will not disturb the tuning of the filter circuit.

27.3.2 Gapped iron core or saturated type reactors

Reactors of this type, as shown in Figure 27.6, tend to saturate at lower currents (Figure 27.2(c)). The current drawn by them is too low, even up to the saturation level, due to high leakage reactance which can increase to 100%. They therefore provide a high inductive impedance initially which becomes stabilized with saturation of the core. After saturation, the *I-ϕ* characteristic becomes almost constant or flat. Such reactors thus have non-linear magnetizing characteristics and the current drawn by them contains many odd harmonics. When the reactor is to be connected on a power system these harmonics must be suppressed as much as possible through filter circuits or by using a multi-limb core arrangement, such as the six- or nine-limb zig-zag arrangement illustrated in Figure 27.7. Beyond the point of saturation, the rise in current is rather fast compared to a small rise in the magnetization or the voltage.

Unlike an air core, the inductor coil now has an iron core that may be provided with air gaps or non-magnetic

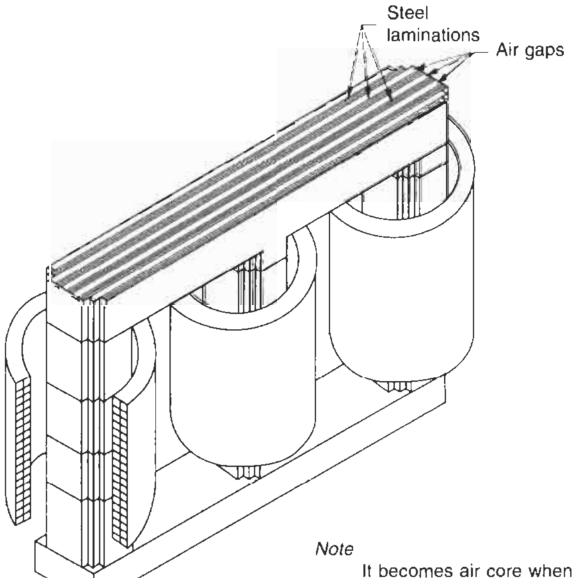

Note
It becomes air core when there is no iron core.

Figure 27.6 A gapped iron three-phase reactor

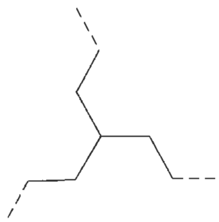

Figure 27.7 Six- or nine-limb zig-zag arrangement of windings to limit the harmonics

separators in between to reduce the iron content and hence the induced magnetic field. The I-ϕ characteristic can thus be varied as required by altering the gap, i.e. the iron content in the core. They are suitable as current limiters, and can also limit the occurrence of overvoltages. Where required, they can be provided with a tap-changing facility to regulate their reactances. Likely applications are:

- Voltage stabilization and control of temporary overvoltages.
- Flicker control in industrial supplies through $V = L\ (di/dt)$ (Section 6.9.4).

27.4 Application

Some of the applications where a power reactor can be used to provide a reactive support or compensation to improve the quality of a power system are noted below.

27.4.1 Shunt reactors or compensating reactors

These are meant for parallel connections to absorb the reactive power (capacitive current) of the system and are generally used on transmission and large distribution networks, as shown in Figure 27.8. They may have a fixed or variable reactance, rated continuously, and any of the magnetic characteristics as illustrated in Figure 27.2. Broadly speaking, they can perform the following functions:

1. Limit the switching surges as discussed in Section 23.5.1. But they may affect the steady-state power transfer capability of the system (V_1^2/Z). Refer to reactive power control (equation (24.10)).
2. Adjust the steady-state voltage control by supplying reactive power and compensating the capacitive content.
3. Suppress the harmonic contents.

Their ratings can be calculated by

$$R = \frac{V^2}{W}$$

$$X_L = \frac{V^2}{VAr}$$

$$VAr = I^2 \cdot X_L (\text{neglecting } R)$$

where

R = reactor resistance – Ω/phase
X_L = reactor reactance – Ω/phase
V = rated voltage of reactor – volts
W = reactor loss – watts/phase
VAr = rated output – VAr/phase
I = rated current of reactor – A

27.4.2 Current limiting or series reactors

These are connected in series in a circuit, as shown in Figure 27.9 and are meant to limit the high inrush current, such as during switching of HT capacitor banks (Section 23.10). They may also be used to limit the currents under fault conditions by adding to the circuit impedance to match with the breaking capacity of the interrupting device when the fault level of the system may exceed this. Some reactor connections are illustrated in Figure 27.10. They are also used for load sharing of two power systems. They are connected in the circuit permanently and may have a fixed or variable reactance, rated continuously and can be made to have linear (fixed reactance) or non-linear magnetic characteristics as required. When they are required to limit the inrush currents, fixed reactance, linear reactors should be preferred. During a fault condition, the reactance of the reactor should not diminish due to the saturation effect. This is an essential requirement to limit the short-time fault currents. Ideally, current

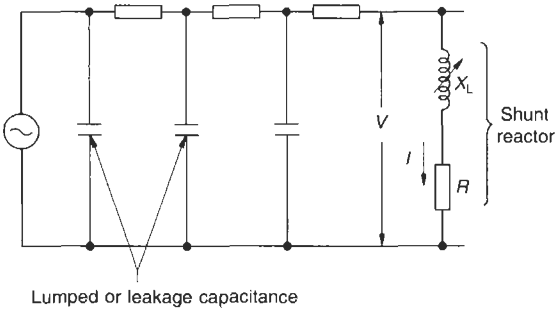

Figure 27.8 Use of a shunt reactor to compensate for the reactive power

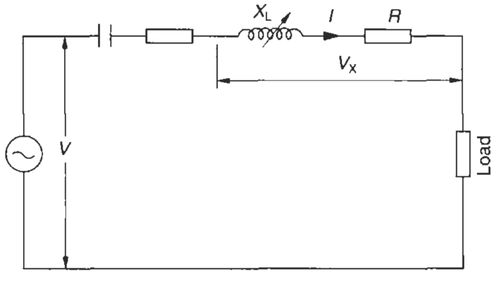

Figure 27.9 Use of current limiting reactor, (1) to limit the fault current, or (2) to limit inrush current during a capacitor switching

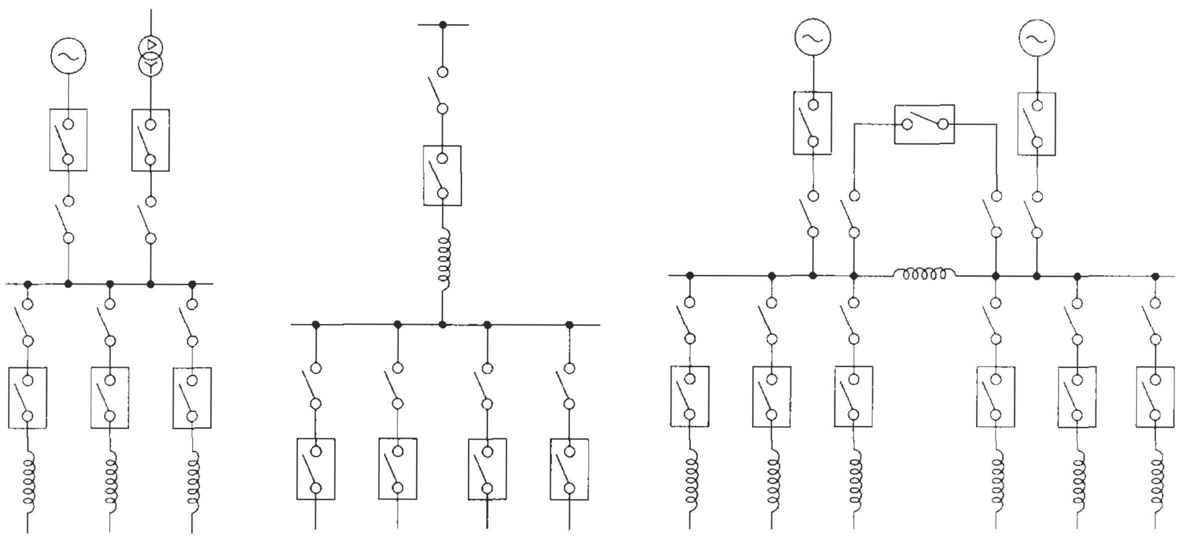
(a) Feeder connections

(b) Tee-off connections

(c) Busbar sectionalizer connections

Figure 27.10 Reactor connections

limiting reactors must have no-iron circuit (air core or coreless type). The iron core type provide non-linear saturating type characteristics, and at overcurrents have a tendency to diminish their reactance due to the saturation effect, while the reactors are required to offer high impedances to limit the fault currents. The coreless type will provide a near-constant reactance at all currents due to the absence of an iron core and hence, their preference over other types for such applications.

Similarly, gapped iron core reactors as shown in Figure 27.4, in which the iron core content is reduced by providing an air gap or non-magnetic material between the core laminations, also raise the saturation level (the core remaining unsaturated, Figure 27.11) to help provide an adequate impedance on fault. They may also be employed as a current limiter, such as shown in Figure 27.9. It must, however, be ensured that the voltage available across the load does not fall below the permissible level as a result of the voltage drop across the reactors. The reactors for such applications should be continuously rated.

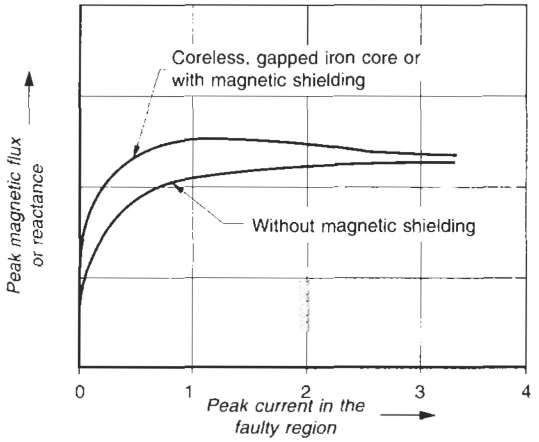

Figure 27.11 Typical characteristics of a current limiting reactor (coreless, gapped iron core or magnetically shielded core type)

For Figure 27.9 the rating of the series reactor can be determined by

$$\text{VAr} = \sqrt{3} \cdot V_x \cdot I$$

$$X_L = \frac{V_x}{\sqrt{3} \cdot I} \ \Omega/\text{phase}$$

where

VAr = rating of the series reactor (Volt. Amp)

V_x = rated voltage drop of the reactor phase to phase in volts

= voltage induced in the reactor when operating at rated current and rated reactance

I = rated current of the reactor (A)

R = resistance of the reactor

$\because$ $R << X_L$ (less than 2–3% of X_L) may be ignored

Example 27.1

Consider a three-phase reactor having the following specifications:

V_r = 33 kV

V_x = 3% of the system voltage (phase to phase)

System current, I_r = 650 A.

To determine the size of the reactor

V_x in absolute terms

$= \frac{3}{100} \times 33$

= 0.99 kV, say 1 kV

Size of a three phase reactor	*Size of a single-phase reactor*
$\text{VAr} = \sqrt{3} \times 1.0 \times 650$ $= 1125$ kVAr	$\text{VAr} = \dfrac{650 \times 1.0}{\sqrt{3}}$ $= 375$ kVAr

$$\text{and } X_\text{L}\text{/phase} = \frac{1 \times 1000}{\sqrt{3} \times 650}$$

$$= 0.89\ \Omega\text{/phase}$$

27.4.3 Dampening reactors

These are meant to limit the inrush currents occurring during a switching operation of a capacitor. They are connected in series with the capacitors and may be short-time rated for the values of the inrush currents and continuously rated for normal line currents. They are almost the same as the series reactors with fixed reactance.

27.4.4 Neutral grounding reactors

These are meant to limit the ground fault current and are used between the neutral of the system and the ground. They are single-phase and may be short-time rated, otherwise they are the same as the current limiting reactors (Figure 27.12). Their ratings can be calculated by

$$X_\text{L} = \frac{V_1}{\sqrt{3}} \cdot \frac{1}{I_\text{g}}$$

where

X_L = reactance – Ω

V_1 = rated voltage of the system

$\left(\dfrac{V_1}{\sqrt{3}} \text{ – rated voltage of the reactor}\right)$

I_g = current through the ground (rated current of the reactor)

X_0 = zero sequence reactance (or impedance) – Ω

$= 3 \cdot X_\text{L}$

27.4.5 Grounding transformer or neutral couplers

These are meant to provide a neutral to an ungrounded system.

When the ground transformer neutral is connected to the ground directly or through a current limiting reactor its neutral current may be considered for a short-time duration only, i.e. until the ground fault exists assuming that the ground fault protective scheme will isolate the faulty circuit promptly.

But when the neutral is grounded through an arc-suppression coil (reactor) the current through the grounded neutral may be of a limited amplitude, say, up to its continuous rating (Section 20.5) and it may exist for longer.

These transformers are three-phase and may be connected for zig-zag or star/delta connections (Section 20.9.1). The delta may also be made open type by inserting a resistor across it to help adjust the zero-sequence impedance, if required.

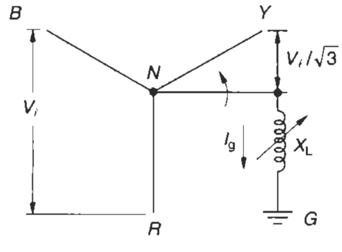

Figure 27.12 Neutral grounding reactor or a Petersen coil

27.4.6 Arc suppression or Petersen coil (reactor)

These are meant to compensate the ground capacitive current on a ground fault in the system, which may be grounded naturally or artificially (Section 20.5). They are connected between the neutral of the system and the ground and are single-phase and may be short-time or continuously rated, depending upon the system requirement. If it is being used as a ground fault neutralizer it may have to be continuously rated. It may be of variable type to help tuning with the system ground capacitance.

27.4.7 Tuning or filter reactors

These are meant to be used with a capacitor to tune a filter circuit, with resonances in the audio frequency range for reducing and filtering the harmonics or communication frequencies. They provide a near short-circuit for the required harmonics to filter them out of circuit. They may be single-phase or three-phase and connected in series or parallel of the capacitor circuit and may have a fixed or variable reactance, rated continuously with saturated magnetic characteristics. They may incur heavy losses.

27.4.8 Smoothing reactors

These are meant to provide high impedance to harmonic currents and block their entry or reduce their amplitudes and are therefore also known as blocking reactors. They may have any of the magnetic characteristics shown in Figure 27.2 and have a fixed reactance, rated continuously.

Example 27.2

Consider a distribution system as illustrated in Figure 27.13(a) being fed by two power sources in tandem:

- A transformer 5000 kVA, 33/11 kV, having a reactance of 7.15% and connected to a power grid.
- A generator 2500 kVA, 11 kV, having a steady-state reactance, *xd* of 25 %.

A three-phase fault somewhere in the bus system, without reactive compensation and ignoring the line impedance, can reach a level of

$$\text{Fault MVA} = \frac{\text{base MVA}}{Z_\text{eq}} \qquad \text{(equation(13.6))}$$

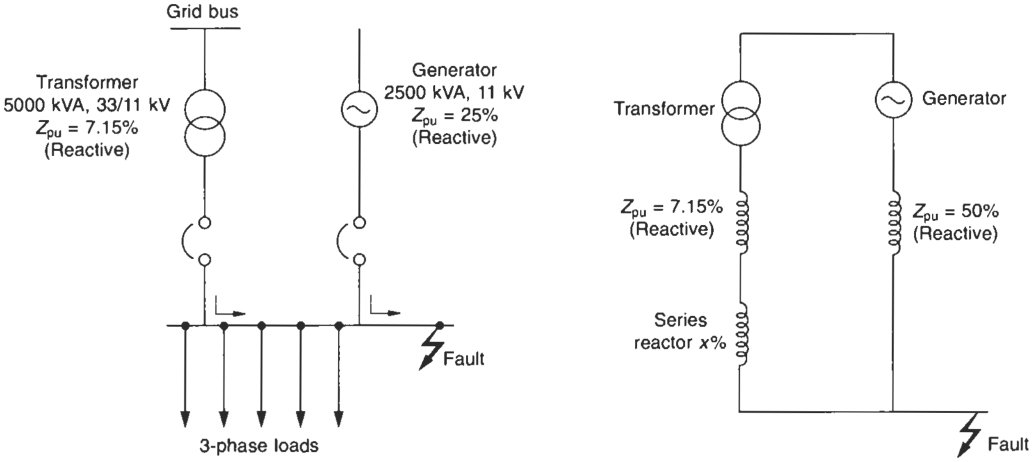

(a) Location of fault

(b) Equivalent circuit

Figure 27.13 Application of a series reactor

where Z_{eq} = equivalent p.u. impedance of the combined power system at the point of fault.

Consider the base level as 5000 kVA, 11 kV

∴ Generator reactance at the new base

$$= 25 \times \frac{5000}{2500} \text{ (equation (13.1))}$$

$$= 50\%$$

and $\frac{1}{Z_{eq}} = \frac{1}{0.0715} + \frac{1}{0.5}$

or $Z_{eq} = 0.0625$

$$\therefore \quad \text{Fault level} = \frac{5000}{0.0625} \qquad \text{(equation (13.6))}$$

$$= 80 \text{ MVA}$$

If the fault level is required to be limited to 50 MVA, a series reactor of reactance, X% may be introduced into the transformer circuit, as illustrated in Figure 27.13(b),

The new $Z_{eq} = \frac{5000}{50 \times 1000}$

$$= 0.1 \text{ p.u.}$$

and the new reactance $\frac{1}{0.1} = \frac{1}{0.0715 + X} + \frac{1}{0.5}$

or $0.1 = \frac{(0.0715 + X)\,(0.5)}{0.5715 + X}$

or $X = 0.0535$ p.u. or 5.35 %

at 5000 kVA base and 11 kV

∴ A series reactor of reactance 5.35% may be used to limit the fault to the required level.

Relevant Standards

IEC	*Title*	*IS*	*BS*
60289/1988	Reactors	5553 (1 to 8)	BS EN 60289/1995
	Relevant US Standards ANSI/NEMA and IEEE		
IEEE 62/1995	Guide for field testing of electric power apparatus insulation. Part I – oil filled reactors		

Notes

1 In the tables of Relevant Standards in this book while the latest editions of the Standards are provided, it is possible that revised editions have become available. With the advances of technology and/or its application, the updating of Standards is a continuous process by different Standards organizations. It is therefore advisable that for more authentic references, readers should consult the relevant organizations for the latest version of a standard.

2 Some of the BS or IS standards mentioned against IEC may not be identical.

3 The year noted against each standard may also refer to the year of its last amendment and not necessarily the year of publication.

PART V

Bus Systems

28

Carrying Power Through Metal-enclosed Bus Systems

Contents

28.1 Introduction

In a power-generating station power is carried from the generator to the power transformer, to the unit auxiliary transformer (UAT) or to the unit auxiliary switchgear as illustrated in Figure 13.21 through solid conductors (HT bus systems). This is due to large capacity of the generators (upto 1000 MW). The transmission of such large amounts of power over long distances is then through overhead lines or underground cables.

Similarly, for a distribution system of 3.3, 6.6 or 11 kV and even higher such as 33 or 66 kV, feeding large commercial or industrial loads, the distribution of power on the LT side (Figure 28.1) may be through cables or solid conductors (LT bus systems), depending upon the size of the transformer. The HT side of the transformer may also be connected through cables or the HT bus system as illustrated.

For moderate ratings, say, up to 600/800 A, cables are preferred, while for higher ratings, (1000 A and above) the practice is to opt for solid conductors (LT bus systems), on the grounds of cost, appearance, safety ease of handling and maintenance. For larger ratings, more cables may become unwieldy and difficult to maintain and may present-problems in locating faults. The conductors used are generally of aluminium, though sometimes the use of copper may be more appropriate in highly corrosive areas.

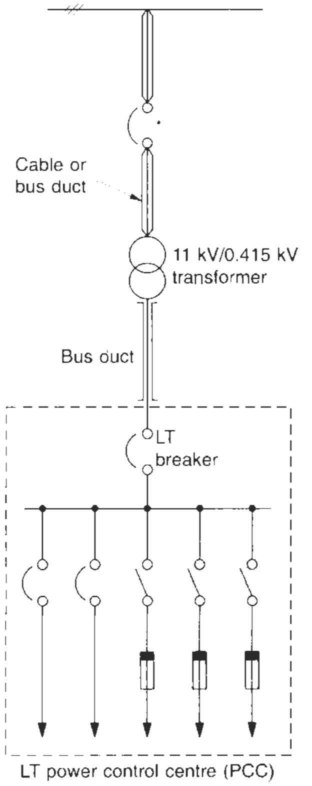

* 11 kV breaker for isolation and protection of transformer and interconnecting cables

Figure 28.1 Application of a bus system

In humid and corrosive conditions, aluminium erodes faster than copper. These solid or hollow conductors connect the supply side to the receiving end and are called bus ducts. They may be of the open type, such as are used to feed a very high current at very low voltage. A smelter unit is one such application. But normally they are housed in a sheet metal enclosure. See Figures 28.2(a) and 28.33(b).

Our main concern here will be dealing with large to very large currents, rather than voltages. Currents are more difficult to handle than voltages due to mutual induction between the conductors and between the conductor and the enclosure. Here we briefly discuss the types of metal-enclosed bus systems and their design parameters, to select the correct size and type of aluminium or copper sections and the bus enclosure for a required current rating and voltage system. More emphasis is given to aluminium conductors rather than copper, as they are more commonly used on grounds of cost.

28.2 Types of metal-enclosed bus systems

A bus system can be one of the following types, depending upon its application:

- Non-segregated
- Segregated
- Isolated phase
- Rising mains (vertical bus systems)
- Overhead bus (horizontal bus system)

28.2.1 A non-segregated phase bus system

In this construction all the bus phases are housed in one metallic enclosure, with adequate spacings between them and the enclosure but without any barriers between the phases (Figure 28.2(a)).

Application

Being simple, it is the most widely used construction for all types of LT systems.

Nominal current ratings

The preferred current ratings may follow series R-10 of IEC 60059 and as discussed in Section 13.4.1(4). They may increase to 6000 A or so, depending upon the application as when required to connect a large LT alternator or the LT side of a large transformer to its switchgear. The preferred short-time ratings may be one of those indicated in Table 13.7.

28.2.2 A segregated phase bus system

In this construction all the phases are housed in one metallic enclosure as earlier, but with a metallic barrier between each phase, as illustrated in Figure 28.2(b). The

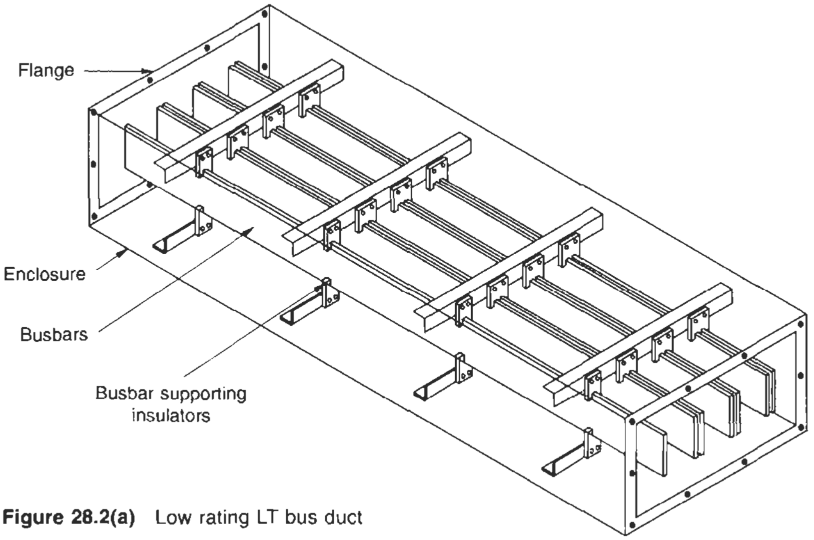

Figure 28.2(a) Low rating LT bus duct

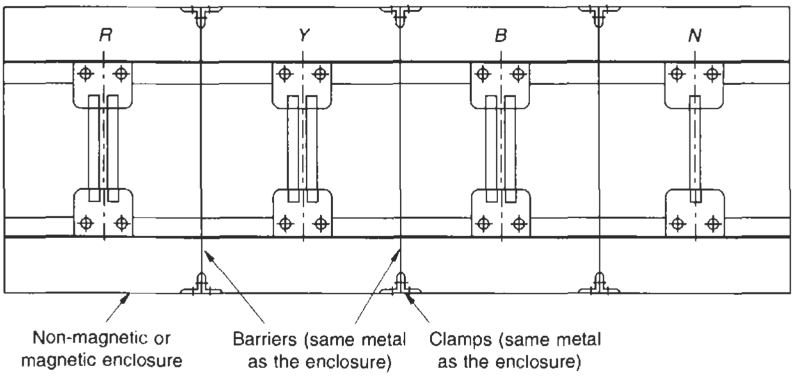

Figure 28.2(b) A segregated phase bus system

metallic barriers provide the required magnetic shielding and isolate the busbars magnetically from each other, rather like an isolated phase bus system (IPB). For more details see Section 31.2. The enclosure can be of MS or aluminium and the barriers can be of the same metal as the enclosure. The purpose of providing a metallic barrier is not only to shroud the phases against short-circuits but also to reduce the effect of proximity of one phase on the other by arresting the electric field produced by the current-carrying conductors within the barrier itself. It now operates like an enclosure with an interleaving arrangement (Section 28.8.4) balancing the fields produced by the conductors to a great extent and also allowing only a moderate field in the space, as in an IPB system (Section 31.2). The enclosure losses with such an arrangement may fall in the range of 60–65% of conductors in case and 30–35% in aluminium enclosures for all voltage systems 3.3–11 kV and current ratings above 3000 A and up to 6000 A or so. Only aluminium enclosures should be preferred to minimize losses and enclosure heating. The effect of proximity is now almost nullified as is an imbalance in the phase reactances. An unbalance in the reactance is otherwise responsible for a voltage unbalance between the three phases as discussed in Section 28.8.2 and enhance the electrodynamic forces that may lead to a phase-to-phase fault at higher rated currents.

Application

They are generally used for higher ratings, 2000 A and above, on all voltage systems. They are, however, preferred on an HT rather than an LT system for reasons of cost, such as between a unit auxiliary transformer (UAT) and its switchgears and a station transformer and its switchgears as in a power-generating station and shown in Figure 13.21.

Note

For such ratings, enclosure of non-magnetic material alone is recommended due to high iron losses in a magnetic material.

Nominal current ratings

These will depend upon the application. The preferred ratings may follow series R-10 of IEC 60059, as described in Section 13.4.1(4). They may increase to 6000 A or so depending upon the application.

28.2.3 An isolated phase bus (IPB) system

The design criteria and construction details of this system are totally different from those of a non-isolated phase bus system. This type of enclosure is therefore dealt separately in Chapter 31.

28.2.4 A rising mains (vertical bus system)

For power distribution in a multi-storey building

This is another form of a bus system and is used in vertical formation to supply individual floors of a high-rise building (Figures 28.3 (a) and (b)). This is much neater arrangement than using cables and running innumerous lengths to each floor which may not only be unwieldy but also more cumbersome to terminate. Such a system is the normal practice to distribute power in a high-riser. It rises from the bottom of the building and runs to the top floor. To save on cost, the ratings may be in a decreasing order after every three or four floors, as after every floor the load for that floor will be reduced.

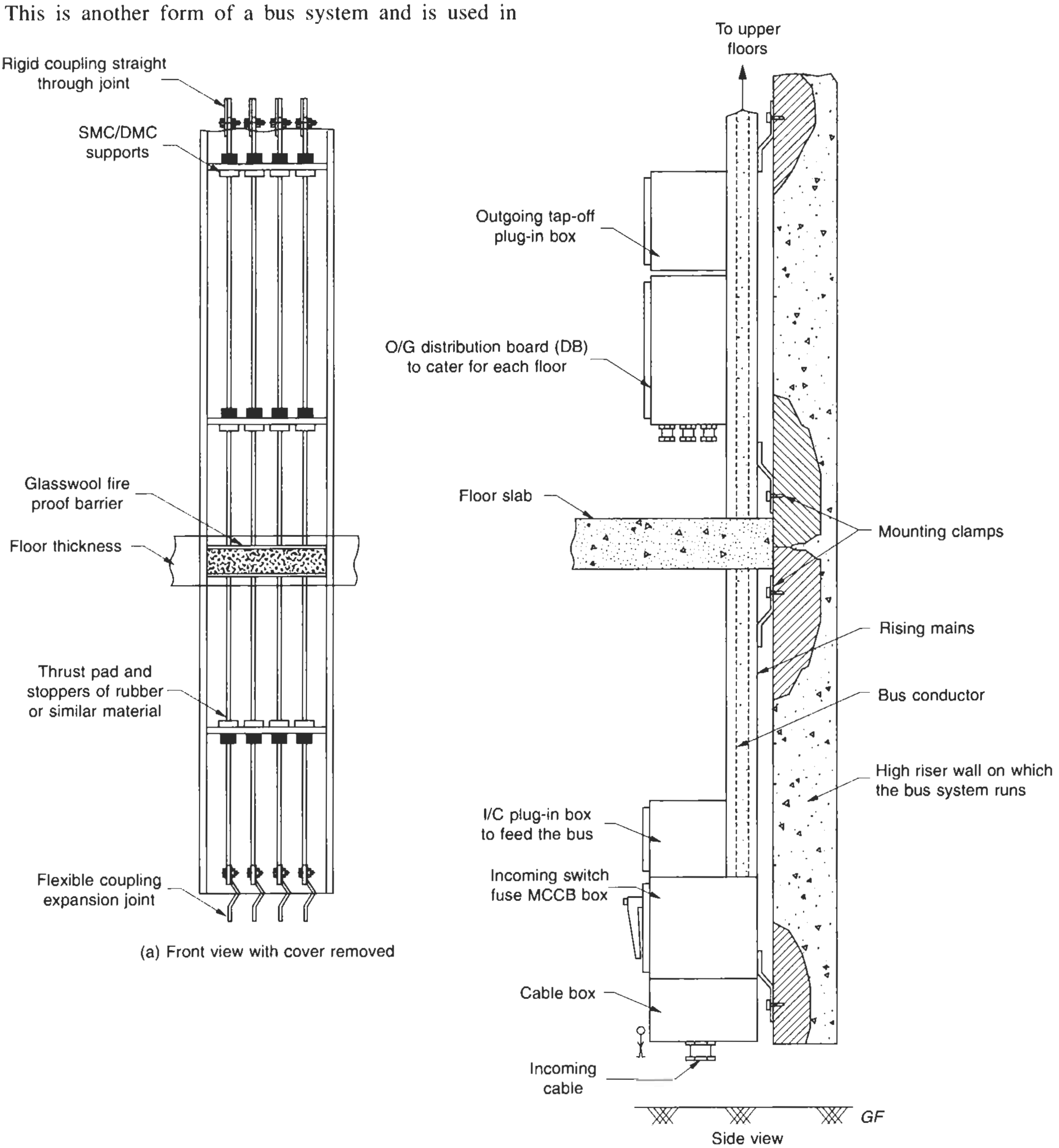

(a) Front view with cover removed

Side view
(b) Rising on wall

Figure 28.3 Rising mains mounting arrangement

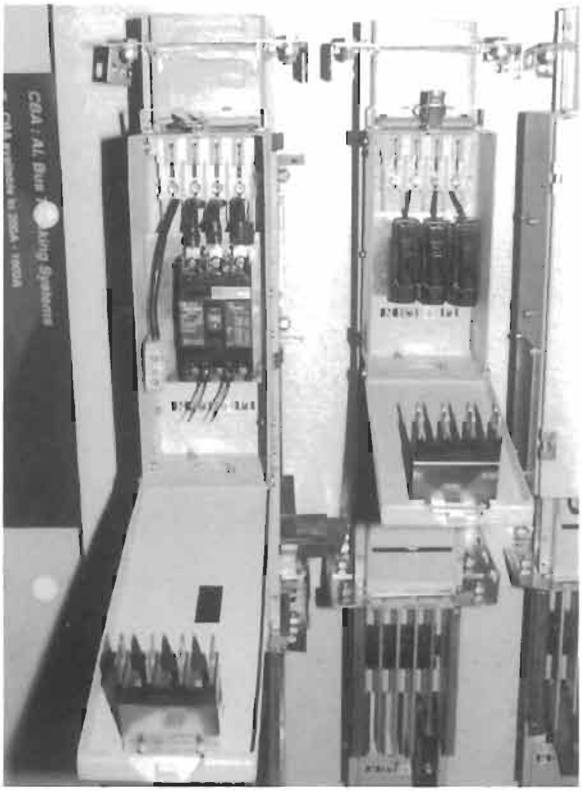
DB with MCCB Typical DB with HCC fuses

Figure 28.3(c)

The rating can be grouped for three or four floors together, depending upon the total load and the number of floors. A smaller rating of, say, 200–400 A need not be further stepped for it may not be of any economic benefit.

Special features of a rising mains

1. They are manufactured in small standard lengths, say, 1.8–2.5 m, and are then joined together at site to fit into the layout.
2. Wherever the rising mains crosses through a floor of the building, fireproof barriers are provided as shown in Figure 28.3(b) to contain the spread of fire to other floors.
3. On each floor an opening is provided in the rising mains to receive a plug-in box (Figure 28.3(b)) to tap-off the outgoing connections and to meet the load requirement of that floor. The plug-in box can normally be plugged in or withdrawn from the live bus without requiring a shutdown.
4. To take up the vertical dynamic load of busbars and to prevent them from sliding down, two sets of thrust pads are generally provided on the busbars in each standard length of the rising mains, as illustrated in Figure 28.3(a).
5. Flexible expansion joints of aluminium or copper are essential after every three or four standard lengths (say, after every 7.5–10 m) to absorb the expansion of busbars on load.

28.2.5 An overhead bus (horizontal bus system)

Unlike a high riser, now the overhead bus system runs horizontally, below the ceiling at a convenient height, as shown in Figure 28.4(c) to distribute power to light and small load points. A large tool room or a machine shop are installations that would otherwise require a distribution system, for short distances, to meet the needs of various load points and make power distribution unwieldy and cumbersome. Moreover, it would also mean running many cables under the floor to feed each load point. In an overhead busbar system, the power can be tapped from any number of points to supply the load points just below it through a plug-in box similar to that used on a rising mains. The floor can now be left free from cables and trenches.

28.3 Design parameters and service conditions for a metal-enclosed bus system

28.3.1 Design parameters

A bus system would be designed to fulfil the following parameters.

Rating

A bus system, like a switchgear assembly, would be assigned the following ratings:

- Rated voltage: the same as that assigned to the associated switchgear (Section 13.4.1(1))
- Rated frequency: the same as that assigned to the associated switchgear (Section 13.4.1(2))
- Rated insulation level
  - (i) Power frequency voltage withstand – see Section 32.3.2
  - (ii) Impulse voltage withstand – for bus systems of 2.4 kV and above see Section 32.3.3
- Continuous maximum rating (CMR) and permissible temperature rise: this is the maximum r.m.s. current that the bus system can carry continuously without exceeding temperature rise limits, as shown in Table 32.3. The preferred current ratings of the bus system would follow series R-10 of IEC 60059, as shown in Section 13.4.1(4).
- Rated short-time current rating: this is the same as for the system to which it is connected, and as assigned to the associated switchgear (Section 13.4.1(5)). The effects of a short-circuit on an electrical system are discussed below.
- Rated momentary peak value of the fault current: the same as assigned to the associated switchgear as in Tables 13.11 or 28.1. See also Section 13.4.1(7).
- Duration of fault: the same as assigned to the associated switchgear (Section 13.4.1(6).

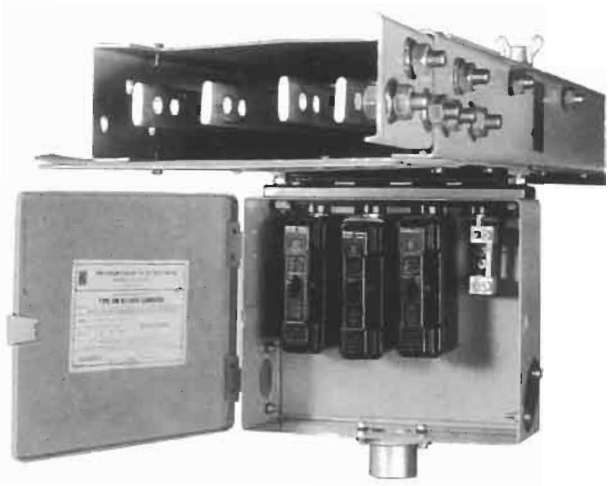

Plugged in position

Withdrawn position

Figure 28.4(a) Plug-in tap-off box

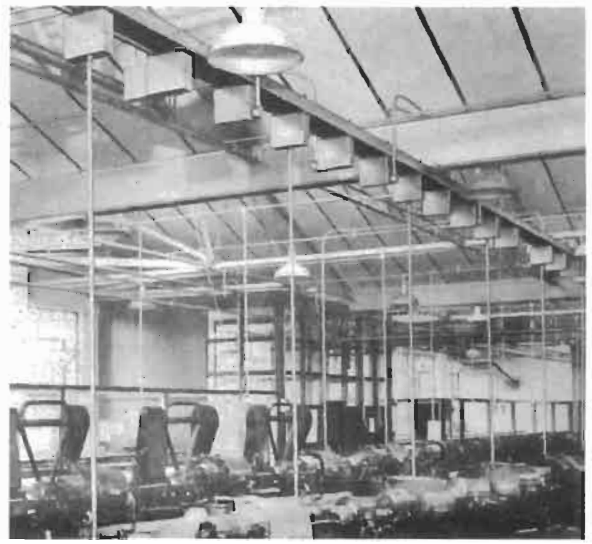

Overhead busbar system in a machine shop

Installation of overhead bus system with tap-off boxes in a large assembly shop

Figure 28.4(c)

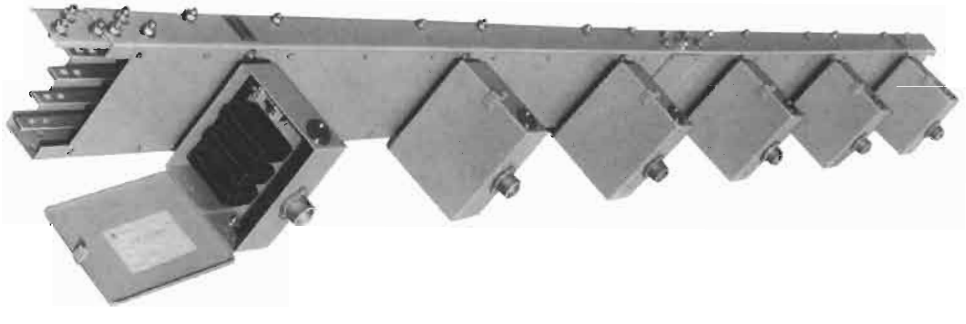

Figure 28.4(b) An overhead bus system shown with tap off boxes (Courtesy: GE Power)

Table 28.1 Momentary peak (maximum r.m.s.) current ratings, asymmetrical, for switchgear and metal-enclosed bus systems, based on ANSI-C-37/20C

Nominal voltage kV(r.m.s.)	*Rated current (I_r) A*[a]	*Non-segregated phase system kA*[b]	*Segregated phase system kA*[b]	*Isolated phase system kA*[b]
0.6	1600	75	–	–
0.6	3000	100	–	–
0.6	4000 to 6000	150	–	–
4.16–13.8	1200 to 3000	19 to 78	–	–
14.4	1200 to 20 000	–	60 to 190	To match with the rating of the connected interrupting device
23–34.5	1200 to 20 000	58	60 to 190	"

[a] (i) These values are based for a system, pertaining to series II and a frequency of 60 Hz.
(ii) For systems pertaining to Series I and a frequency of 50 Hz, values furnished in Section 13.4.1(4), would apply.

[b] The peak value is a function of fault level Section 13.4.1(7), Table 13.11. Which in turn, is a function of size and impedance of the feeding source, such as a transformer or a generator, Section 13.4.1(5), Table 13.7. The values prescribed in the above table are thus based on these parameters.

28.4 Short-circuit effects

(To determine the minimum size of current-carrying conductors and decide on the mounting arrangement).

A short-circuit results in an excessive current due to low impedance of the faulty circuit between the source of supply and the fault. This excessive current causes excessive heat ($\propto I_{sc}^2 \cdot R$) in the current-carrying conductors and generates electromagnetic effects (electric field) and electrodynamic forces of attraction and repulsion between the conductors and their mounting structure. These forces are distributed uniformly over the length of conductors and cause shearing forces due to the cantilever effect as well as compressive and tensile stresses on the mounting structure. The effect of a short-circuit therefore requires these two very vital factors (thermal effects and electrodynamic forces) to be taken into account while designing the size of the current-carrying conductors and their mounting structure. The latter will include mechanical supports, type of insulators and type of hardware, besides the longitudinal distance between the supports and the gap between phase-to-phase conductors.

The electrodynamic forces may exist for only three or four cycles (Section 13.4.1(7)), but the mechanical system must be designed for these forces. On the other hand, the main current-carrying system is designed for the symmetrical fault current, I_{sc} (Table 13.7) for one or three seconds according to the system design. For more details refer to Section 13.5.

The fault level, which is a function of the size of the feeding transformer, is generally considered to last for only one second, as discussed in Section 13.4.1(5), unless the system requirements are more stringent. This duration of one second on fault may cause such a temperature rise (not the electrodynamic forces), that unless adequate care is taken in selecting the size of the current-carrying conductors, they may melt or soften to a vulnerable level before the fault is interrupted by the protective devices.

Note

When the circuit is protected through HRC fuses or built-in short-circuit releases of a current limiting interrupting device the cut-off time may be extremely low, of the order of less than one quarter of a cycle, i.e. < 0.005 second (for a 50 Hz system) (Section 13.5.1) depending upon the size and the characteristics of the fuses or the interrupting device and the intensity of the fault current. Any level of fault for such a system would be of little consequence, as the interrupting device would isolate the circuit long before the fault current reaches its first peak. This is when the fault is downstream of the protective device. Refer to Example 28.1 below.

Example 28.1

Since the heating effect $\propto I_{sc}^2 \cdot t$

therefore heating effect of a 50 kA fault current for 0.005 second $\propto 50^2 \times 0.005$, compared to the heating effect of an equivalent fault current I_{sc} for 1 second, i.e. $\propto I_{sc}^2 \cdot 1$

or $I_{sc}^2 = 50^2 \times 0.005$

i.e $I_{sc} = 50 \times \sqrt{0.005}$

or 3.5 kA only

Thus to design a system protected through HRC fuses or a current limiting device for a higher fault level than necessary will only lead to overprotection and the extra cost of the current-carrying system, switching equipment and power cables. An individual device or component and its connecting links in such cases may therefore be designed for a size commensurate to its current rating. See also Section 13.5.1.

Below we discuss the thermal effects and the electrodynamic forces which may develop during a fault to decide on the correct size of the conductor and its supporting system.

28.4.1 Thermal effects

With normal interrupting devices the fault current would last for only a few cycles (maximum up to one or three seconds, depending upon the system design). This time is too short to allow heat dissipation from the conductor through radiation or convection. The total heat generated on a fault will thus be absorbed by the conductor itself.

The size of the conductor therefore should be such that its temperature rise during a fault will maintain its end temperature below the level where the metal of the conductor will start to soften. Aluminium, the most widely used metal for power cables, overhead transmission and distribution lines or the LT and HT switchgear assembly and bus duct applications, starts softening at a temperature of around 180–200°C. As a rule of thumb, on a fault a safe temperature rise of 100°C above the allowable end temperature of 85°C or 90°C of the conductor during normal service, i.e. up to 185–190°C during a fault condition, is considered safe and taken as the basis to determine the size of the conductor. The welded* portion, such as at the flexible joints, should also be safe up to this temperature. Tin or lead solder starts softening at around this temperature and should not be used for this purpose. It is advisable to use brass soldering where high-injection pressing is not possible. Welding of edges is essential to seal off flexible ends.

To determine the minimum size of conductor for a required fault level, I_{sc}, to account for the thermal effects only one can use the following formula to determine the minimum size of conductor for any fault level:

$$\theta_1 = \frac{k}{100} \cdot \left(\frac{I_{sc}}{A}\right)^2 \cdot (1 + \propto_{20} \theta) \cdot t \qquad (28.1)$$

where

θ_1 = temperature rise (in °C)
I_{sc} = symmetrical fault current r.m.s. (in Amps)
A = cross-sectional area of the conductor (in mm^2)
$\propto_{20}$ = temperature coefficient of resistance at 20°C/°C, which as in Table 30.1 is 0.00403 for pure aluminium and 0.00363 for aluminium alloys and 0.00393 for pure copper
θ = operating temperature of the conductor at which the fault occurs (in °C)
K = 1.166 for aluminium and 0.52 for copper
t = duration of fault (in seconds)

Example 28.2

Determine the minimum conductor size for a fault level of 50 kA for one second for an aluminium conductor.

Assuming the temperature rise to be 100°C and the initial temperature of the conductor at the instant of the fault 85°C then

$$100 = \frac{1.166}{100} \times \left(\frac{50\,000}{A}\right)^2 \times (1 + 0.00403 \times 85) \times 1$$

or $$100 = \frac{1.166}{100} \times \left(\frac{50\,000}{A}\right)^2 \times 1.34255$$

or $$A = \frac{50\,000}{100} \times \sqrt{1.166 \times 1.34255}$$

$$\simeq 625.6 \text{ mm}^2 \text{ for pure aluminium}$$

or $$\simeq 617.6 \text{ mm}^2 \text{ for alloys of aluminium}$$

$$(\text{assuming } \alpha_{20} = 0.00363)$$

The standard size of aluminium flat nearest to this is 50.8 mm × 12.7 mm or (2″ × $^1/_2$″) or any other equivalent flat size (Tables 30.4 or 30.5).

This formula is also drawn in the form of curves as shown in Figure 28.5, $I_{sc}/A \times \sqrt{t}$, (I_{sc} in kA) versus final temperature. From these curves the minimum conductor size can be easily found for any fault level, for both aluminium and copper conductors and for any desired end temperature. As in the above case

$$100 = \frac{1.166}{100} \times \left(\frac{I_{sc}}{A}\right)^2 \times 1.34255 \cdot t$$

or $$\frac{I_{sc}}{A}\sqrt{t} = \sqrt{\frac{10^4}{1.166 \times 1.34255 \times 10^6}}$$

$$= 0.0799 \ (I_{sc} \text{ is in kA})$$

Generalizing,

$$\frac{I_{sc}}{A} \times \sqrt{t} = 0.0799 \text{ for an operating temperature at 85°C and temperature at 185°C} \qquad (28.2)$$

Therefore, for the same parameters as in Example 28.2

$$A = \frac{50}{0.0799} \times \sqrt{1} \simeq 625.8 \text{ mm}^2$$

A small difference, if any, between this and that calculated above may be due to approximation and interpolation only.

This minimum conductor size will take account of the heating effects only during the fault, irrespective of the current rating of the conductor. The required conductor size may be more than this, depending upon the continuous current it has to carry, as discussed later.

Example 28.3

If the conductor is of copper then, assuming the same parameters,

$$100 = \frac{0.52}{100} \times \left(\frac{50\,000}{A}\right)^2 \times (1 + 0.00393 \times 85) \times 1$$

or $$A = 50\,000 \times \sqrt{\left(\frac{0.52}{100} \times \frac{1.33405}{100}\right)}$$

$$= 416 \text{ mm}^2$$

Copper is one two thirds the size of aluminium for the same parameters and the melting point of copper at almost 1083°C (Table 30.1) is approximately 1.5 times that of aluminium at 660°C. These melting points are also located on the nomograms in Figure 28.6. Refer to nomograms (a) and (b) for aluminium and (c) for copper conductors. The same area can also be obtained from the copper curves of Figure 28.5. Assuming the same end temperature at 185°C, then corresponding to the operating curve of 85°C,

$$\frac{I_{sc}}{A}\sqrt{t} = 0.12 \qquad (28.3)$$

and for the same parameters as in Example 28.3,

---

*Welding of flexible joints should preferably be carried out with high-injection pressing (welding by press heating), eliminating the use of welding rods.

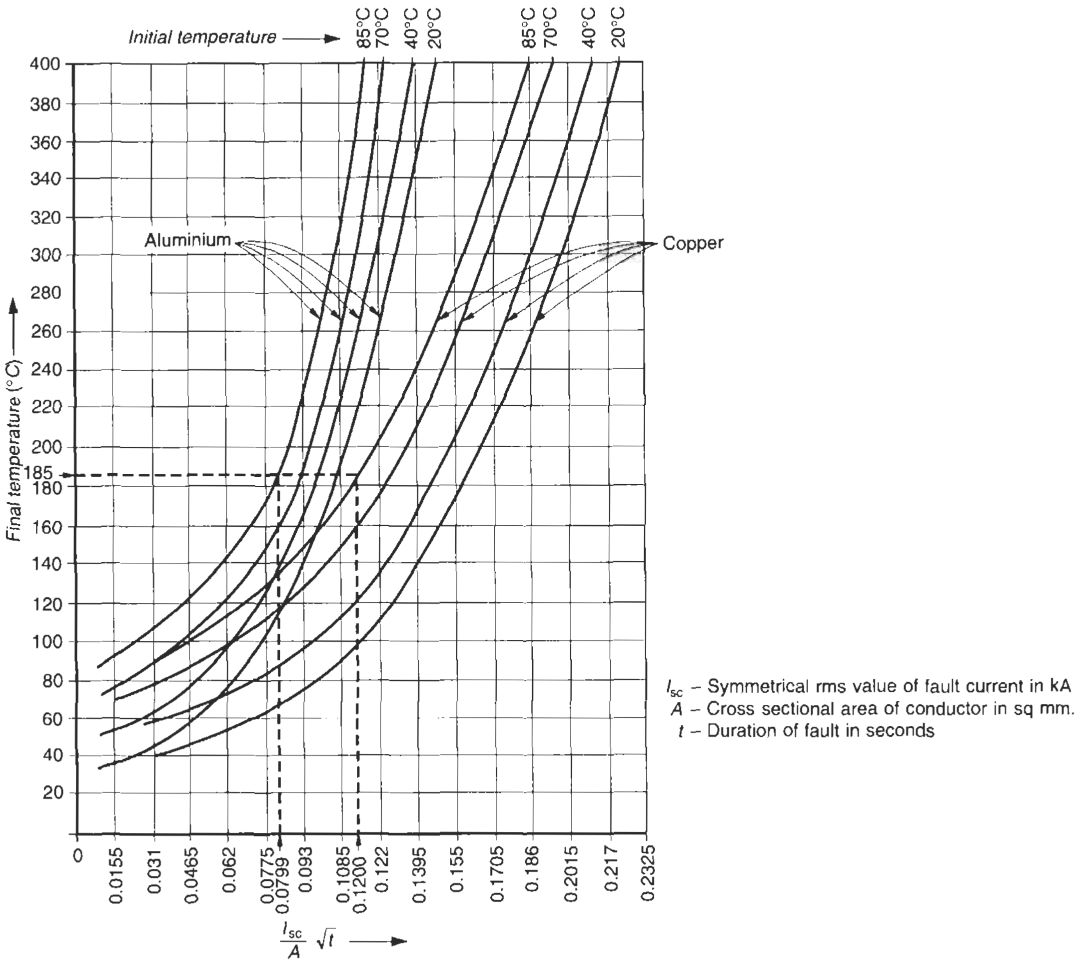

Figure 28.5 Determining the minimum size of conductor for a required fault level

$$\frac{50}{A}\sqrt{1} = 0.12$$

$$\text{or} \quad A \simeq 416.7 \text{ mm}^2$$

Almost the same size is also determined through the use of nomograms drawn on subsidiary nomogram (c) and the main nomogram (d).

Note

In case of copper also, the end temperature is considered at 185°C only. Although this metal can sustain much higher temperature than this, without any adverse change in its mechanical properties, merely as a consideration to Table 32.3, and to safeguard other components, insulations and welded parts etc., used in the same circuit.

Nomograms Figure 28.6(a)–(d) have also been drawn based on equation (28.1). From these nomograms the minimum conductor size can be extrapolated that would be necessary to sustain a given fault level.

The results of these nomograms are also the same as those from the earlier two methods except for the approximation and the interpolation.

Example 28.4
Assume the same parameters as in Example 28.2.

Procedure

- Locate the initial temperature (85°C) and the final temperature (185°C) on the subsidiary nomogram (b).
- Draw a straight line between these points to obtain the heating function H.
- Transfer the value of the heating function H to the H scale on the main nomogram (d).
- Locate time t as one second on the T scale.
- Locate the current to be carried, I_{sc}, as 50 000 A on the I_{sc} scale.
- Draw a straight line through the points on the T and I_{sc} scales to intersect the turning axis X.
- Draw a straight line through the points on the H scale and on the turning axis X. The point where the line intersects on the A scale will determine the conductor area required. In our case it is 1 squre inch or 645 mm^2.

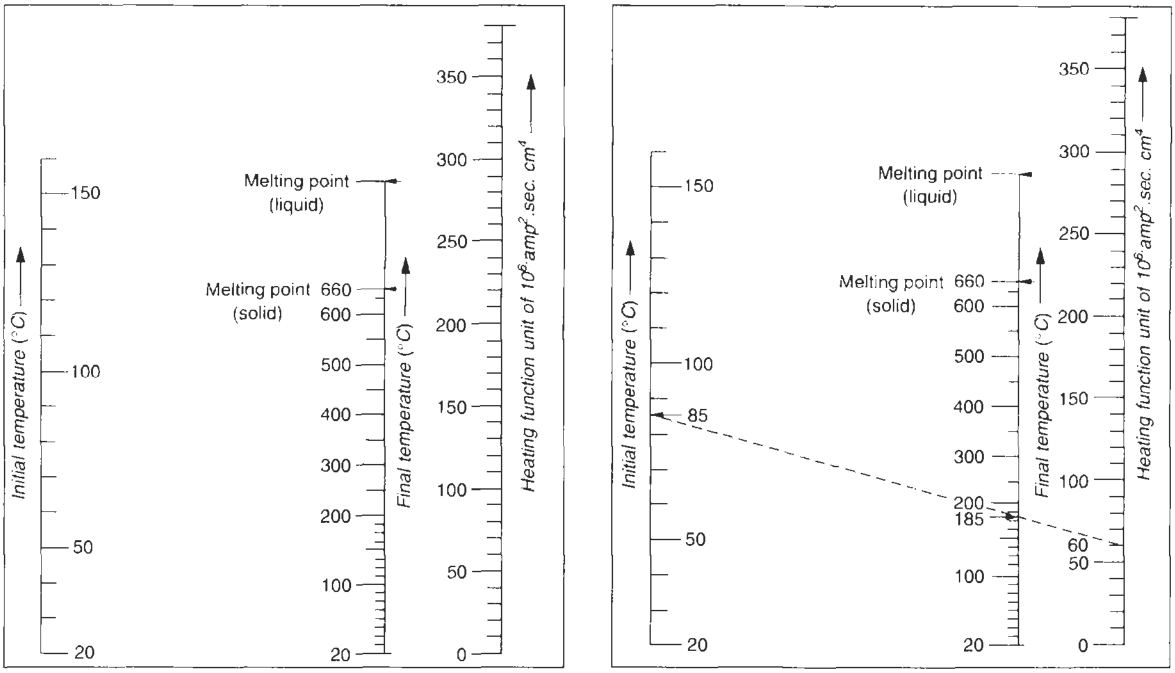

(a) Subsidiary nomogram for electrolytic grade aluminium 'INDAL'–CISM.

(b) Subsidiary nomogram for electrolytic grade aluminium 'INDAL'–D 50S WP.

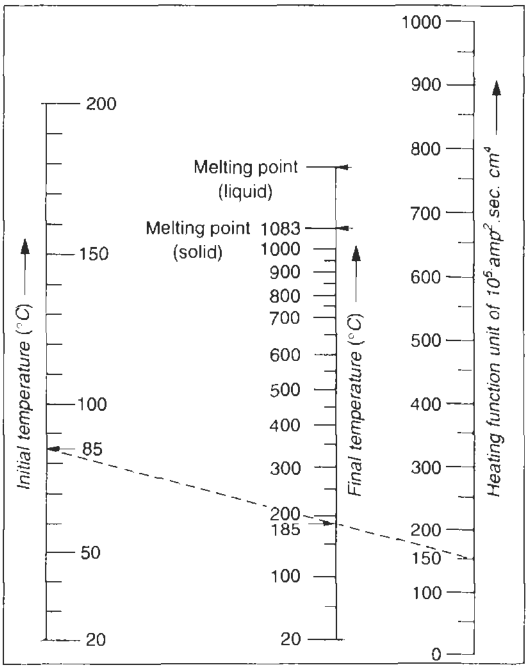

(c) Subsidiary nomogram for 100% IACS copper.

Figure 28.6 Use of nomograms

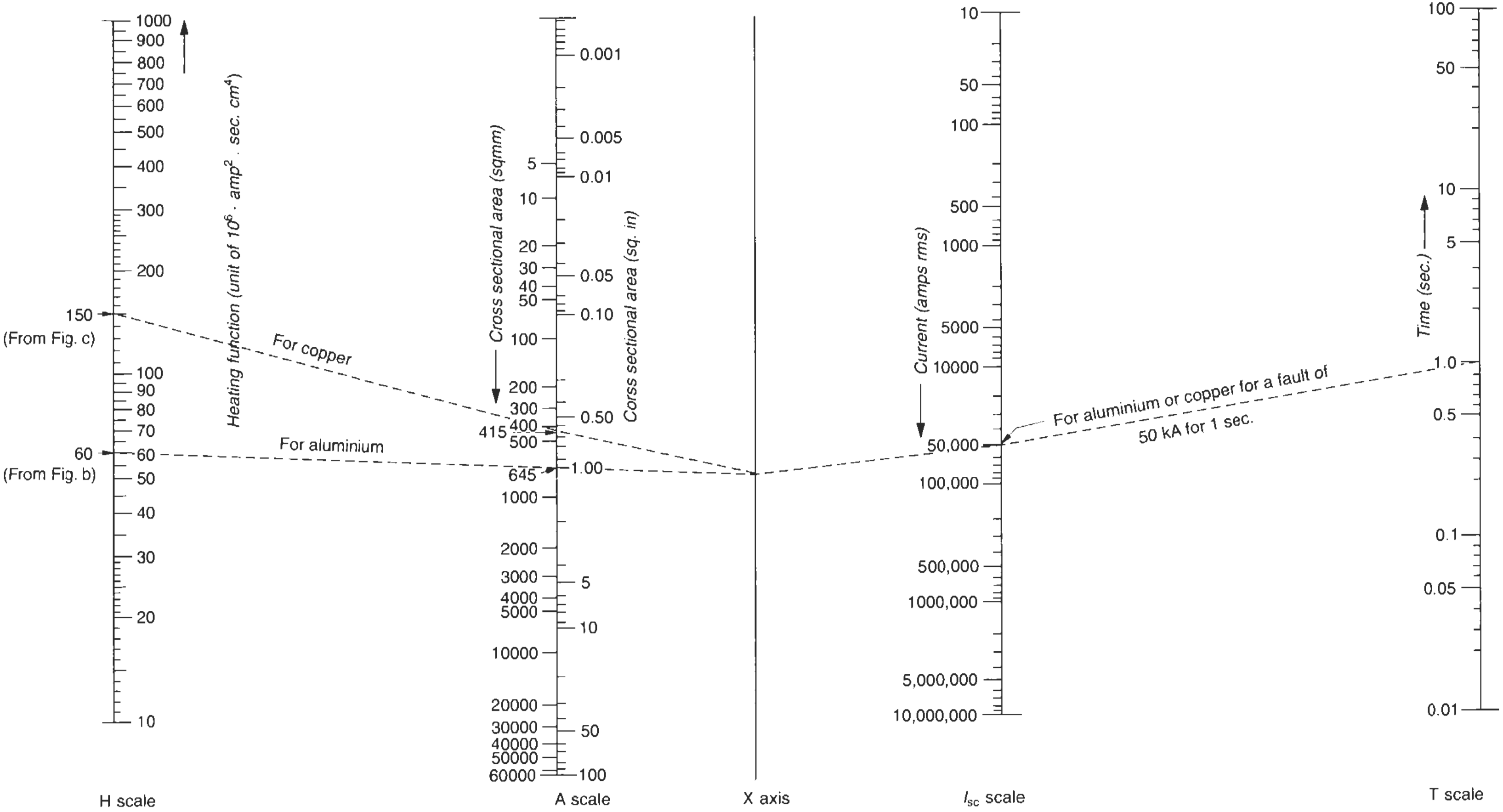

Figure 28.6(d) Main nomogram

28.4.2 Electrodynamic effects

The short-circuit current is generally unsymmetrical and contains a d.c. component, I_{dc}, as discussed in Section 13.4.1(7). The d.c. component, although it lasts for only three or four cycles, creates a sub-transient condition and causes excessive electrodynamic forces between the current-carrying conductors. The mounting structure, busbar supports and the fasteners are subjected to these forces. This force is greatest at the instant of fault initiation and is represented by the first major loop of the fault current, as noted in Table 13.11. Although this force is only momentary, it may cause permanent damage to these components and must be considered when designing the current-carrying system and its mounting structure. The maximum force in flat busbars may be expressed by

$$F_m = k \cdot \frac{16 \cdot I_{sc}^2}{S} \times 10^{-4} \text{ N/m} \qquad (28.4)$$

where

F_m = estimated maximum dynamic force that may develop in a single- or a three-phase system on a fault. This will vary with the number of current-carrying conductors and their configuration but for ease of application and for brevity only the maximum force that will develop in any configuration is considered in the above equation. It will make only a marginal difference to the calculations, but it will be on the safe side. For more details refer to the further reading at the end of the chapter.

I_{sc} = r.m.s. value of the symmetrical fault current in amperes

Factor of asymmetry = as in Table 13.11, representing the momentary peak value of the fault current. This factor is considered in the numerical factor 16 used in the above equation.

k = space factor, which is 1 for circular conductors. For rectangular conductors it can be found from the space factor graph (Figure 28.7) corresponding to

$$\frac{S - a}{a + b} \text{ where}$$

S = centre spacing between two phases in mm (Figure 28.8)

a = space occupied by the conductors of one phase in mm, and

b = width of the conductors in mm.

For application of the above equation, refer to Example 28.12.

28.5 Service conditions

The performance of a bus system can be affected by the following service conditions:

1 Ambient temperature
2 Altitude
3 Atmospheric conditions and
4 Excessive vibrations and seismic effects

28.5.1 Ambient temperature

The ratings as provided in Tables 30.2, 30.4 and 30.5 and others refer to an ambient temperature, with a peak of 40°C and an average of 35°C over a period of 24 hours. The end temperature for aluminium is considered safe at 85–90°C, at which the metal does not deteriorate (oxidize) or change its properties (mechanical strength) over a long period of operation. Figure 28.9 shows the effect of higher operating temperatures on the mechanical strength of aluminium metal. The oxidation and mechanical strength are two vital factors that need be borne in mind when selecting busbar size to ensure its adequacy during long hours of continuous operation. Table 28.2 lists the permissible operating temperatures of the various parts of a bus system.

For higher ambient temperatures, current capacity should be suitably reduced to maintain the same end temperature during continuous operation. Refer to Tables 28.3(a) and (b), recommending the derating factors for a higher ambient temperature or a lower temperature rise for the same end temperature of 85° or 90°C respectively. For intermediate ambient temperatures, see Figure 28.10.

Table 28.2 Operating temperature of a bus system

Maximum operating temperature (hot spot)	*Maximum temperature limit as in IEEE-C-37-20*[a]
• Bus conductor with plain connection joints	70°C
• Bus conductor with silver plated or welded contact surfaces	105°C
Enclosure	
• Accessible part	80°C
• Non-accessible part	110°C
• Termination at cables with plain connections	70°C
• Termination at cables with silver-surfaced or equivalent connections	85°C

[a] Or as specified by the user.

Note
For temperatures above 100°C it is recommended to use epoxy insulators/supports, which can continuously operate up to 125°C. SMC/FRP (fibreglass reinforced plastic) insulators/supports may not withstand 105°C.

Operating temperatures of bus conductors

Aluminium and copper conductors start oxidizing at about 90°C. The oxides of aluminium (Al_2O) and copper (CuO) are poor conductors of electricity. They may adversely affect bus conductors, particularly at joints, and reduce their current-carrying capacity over time, and lead to their overheating, even to an eventual failure. Universal practice therefore is to restrict the operating temperature

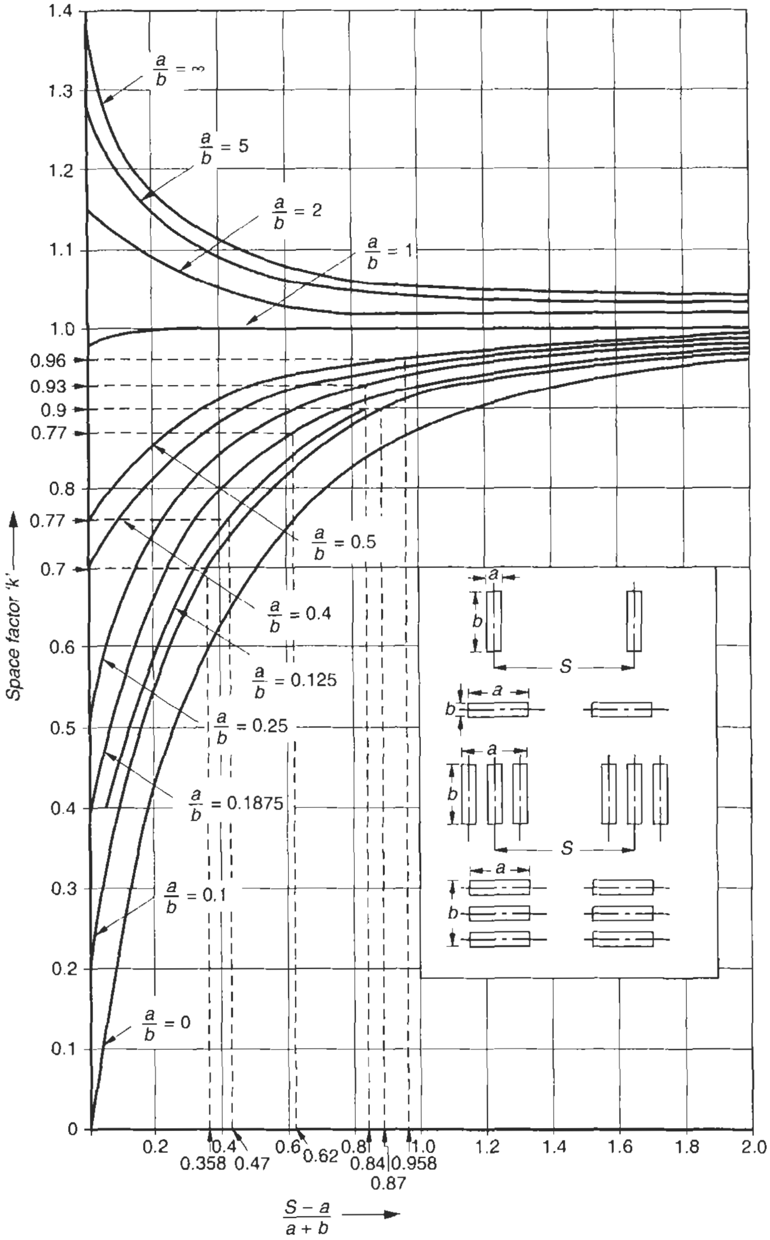

Figure 28.7 Space factor for rectangular conductors (Courtesy: The Copper Development Association)

Table 28.3 Derating factors on account of higher ambient temperature or restricted temperature rise

(a) *Operating temperature 85°C*			(b) *Operating temperature 90°C*		
Ambient temperature °C	*Permissible bar temperature rise °C*	*Derating factor*	*Ambient temperature °C*	*Permissible bar temperature rise °C*	*Derating factor*
30	55	1.05	35	55	1.05
35	50	1.0	40	50	1.0
40	45	0.945	45	45	0.945
45	40	0.88	50	40	0.88
50	35	0.815	55	35	0.815
55	30	0.75	60	30	0.75

Notes

1 These data are drawn in the shape of a graph in Figure 28.10.

2 Intermediate values can be obtained by interpolation.

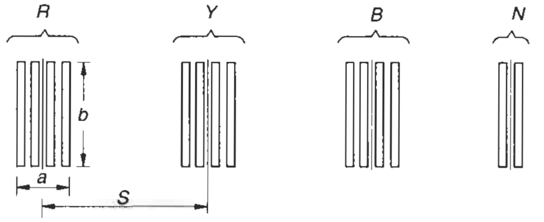

S > 2*a* or 2*b* whichever is more.

Figure 28.8 Placement of busbars to minimize the effect of proximity

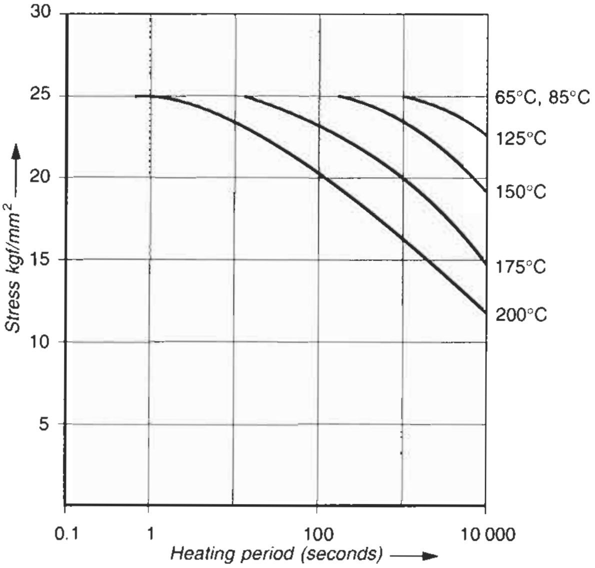

Figure 28.9 Curves showing the tensile strength of Indal D50SWP at higher temperatures

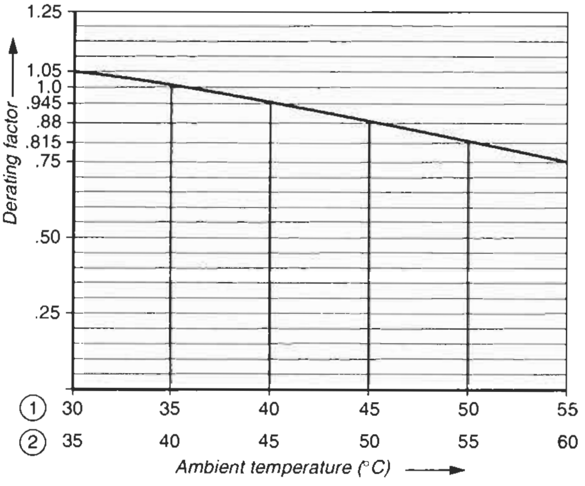

① For maximum operating temperature 85°C

② For maximum operating temperature 90°C

Figure 28.10 Derating factors for different ambient and maximum operating temperatures

of the bus conductors to 85–90°C for all ratings, at least in the medium range, say, up to 3200 A.

Silver oxide (Ag_2O) is a good conductor of electricity and can also be used for welding joints. It can seal the inside surfaces from the atmosphere and can also prevent the contact surfaces from oxidation. If the joints are silver plated or welded, the bus system can be made suitable to operate at higher temperatures. In aluminium conductors, for instance, they can be operated up to an optimum temperature of 125°C, until aluminium begins to lose its mechanical strength (Figure 28.9). Similarly, copper conductors can operate at still higher temperatures. The entire bus system can now be operated at much higher temperatures than given in Table 28.2.

However, operation at such high temperatures may impose many other constraints, such as high temperature in the vicinity which may endanger the operating personnel. It may even become a source of fire hazard. Such a high temperature may also damage components mounted inside the enclosure, which may not be able to sustain such high temperatures. It may also cause limitations on gaskets and other hardware of the bus system to operate at such high temperatures continuously. Accordingly, the maximum operating temperature of a bus system aluminium or copper with silver-plated or welded joints is also permitted up to 105°C only. The enclosure temperature is still restricted to 80°C, or up to 110°C at locations that are safe and inaccessible to a human body (Table 28.2).

28.5.2 Altitude

The standard altitude for a metal enclosed bus system will remain the same as for a switchgear assembly (Section 13.4.2). Higher altitudes would require similar deratings in dielectric strength and the current ratings as for a switchgear assembly (Table 13.12), would apply. To achieve the same level of dielectric strength, the insulation of the bus system may be improved by increasing the clearances and creepage distances to ground and between phases, as noted in Tables 28.4 and 28.5. To achieve the same value of continuous current, the size of the current-carrying conductors may be increased sufficient to take care of the derating.

Note
It is also possible to derive almost the same value of derating by reducing the allowable temperature increase by 1% for every 300 m rise in altitude above the prescribed level.

Clearances and creepage distances

The clearances and creepage distances for open and enclosed indoor-type air-insulated busbars, as suggested by BS 159, are given in Tables 28.4 and 28.5 respectively.

These values are considered for an altitude of up to 2000 m for LT and 1000 m for HT systems. For higher altitudes to achieve the same level of dielectric strength, the values of clearances and creepage distances, as given in Tables 28.4 and 28.5, may be increased by at least 1% for every 100 m rise in altitude.

Table 28.4 Clearances for enclosed, indoor air-insulated busbars

Rated voltage kV (r.m.s.)	*Minimum clearance to ground in air mm*	*Minimum clearance between phases in air mm*
Up to 0.415	16	19
0.6	19	19
3.3	51	51
6.6	64	89
11	76	127
15	102	165
22	140	241
33	222	356

Table 28.5 Creepage distances for enclosed indoor air insulated busbars as in BS 159

Rated voltage kV (r.m.s.)	*Minimum creepage distance to ground in air mm*	*Minimum creepage distance between phases in air*
Up to 0.415	19	Minimum 50% more
0.6	25	
3.3	51	
6.6	89	
11	127	
15	152	
22	203	
33	305	

Notes

1 The above figures are only indicative, and may be considered as a minimum for a bus system that is dry and free from dust or any contamination, which may influence and reduce the effective creepage over time. These creepages may be increased for damp dirty or contaminated locations.

2 For clarification and more details refer to BS 159.

Common to both tables

1 The above clearances and creepage distances are for altitudes of up to 2000 m for LT and 1000 m for HT systems.

2 For higher altitudes than this, these distances should be increased by at least 1%, for every 100 m rise in altitude.

3 Voltages higher than above, are not applicable in case of bus systems.

28.5.3 Atmospheric conditions

The same conditions would apply as for a switchgear assembly (Section 13.4.2). Unlike a controlgear or a switchgear assembly, a bus system may be required to be partly located outdoors. This is true for most installations, as the switchyard is normally located outdoors as is the feeding transformer, while, the switchgears are located indoors, to which the bus system is connected.

In such conditions, it is important that adequate care is taken to construct the bus enclosure to weather the outdoor conditions such as by providing a canopy on the top and special paint treatment on the outdoor part. It is also recommended to seal off the indoor from the outdoor part to prevent the effect of rainwater, dust and temperature and other weather conditions on the indoor part. This can be achieved by providing seal-off bushings, one on each phase and neutral, wherever the bus enclosure passes through a wall. The bushings may be of SMC/DMC/FRP or porcelain for LT and epoxy compound for HT systems. They may be fitted at the crossovers so that the indoor bus is sealed off from the outdoor one. The bus conductors will pass through the bushings. The HT bus conductors may be moulded with the epoxy bushings, as illustrated in Figure 28.11(b), similar to bar primary CTs (Figure 15.14) to make the joint airtight. In LT a simpler method is found by providing glass wool in the part that passes through the wall as illustrated in Figure 28.11(a).

28.5.4 Excessive vibrations and seismic effects

These will require a more robust enclosure, similar to a switchgear assembly. For details refer to Section 13.4.2.

28.6 Other design considerations

- Size of enclosure
- Voltage drop
- Skin and proximity effects

28.6.1 Size of enclosure

The enclosure of the bus system provides the cooling surface for heat dissipation. Its size has an important bearing on the temperature rise of conductors and consequently their current-carrying capacity. The enclosure effect and the ventilating conditions of the surroundings in which the enclosure is installed should thus be considered when designing a bus system. The ratio of the area of the current-carrying conductors to the area of the enclosure will provide the basis to determine the heat dissipation effect. Table 28.6 suggests the approximate dissipation factors that can be considered as likely deratings for a bus system under different conditions. See also Example 28.12.

28.6.2 Voltage drop

The voltage drop across a bus system should be as low as possible and generally within 1–2% of the rated voltage. This criterion will generally be applicable to a high-current LT system. On HT and low LT current-carrying systems, this drop may be quite low. The length of a bus system, in most of applications, may not be long enough to cause a voltage drop, *IZ*, to be taken into consideration. It may be the connection from the incoming transformer to the main receiving switchgear or the busbars of the main switchgear assembly itself. Applications requiring extra-long current-carrying conductors, however, may have large impedance and may cause high voltage drops, of the order of 3–5% and even more. When so, they may affect the stability of the system as well as the performance of the connected load. This is illustrated in Example 28.9. To ascertain the voltage drop in such cases it is essential to determine the actual values of the conductor's own resistance, reactance and the impedance under actual operating conditions. It may be noted that reactance is

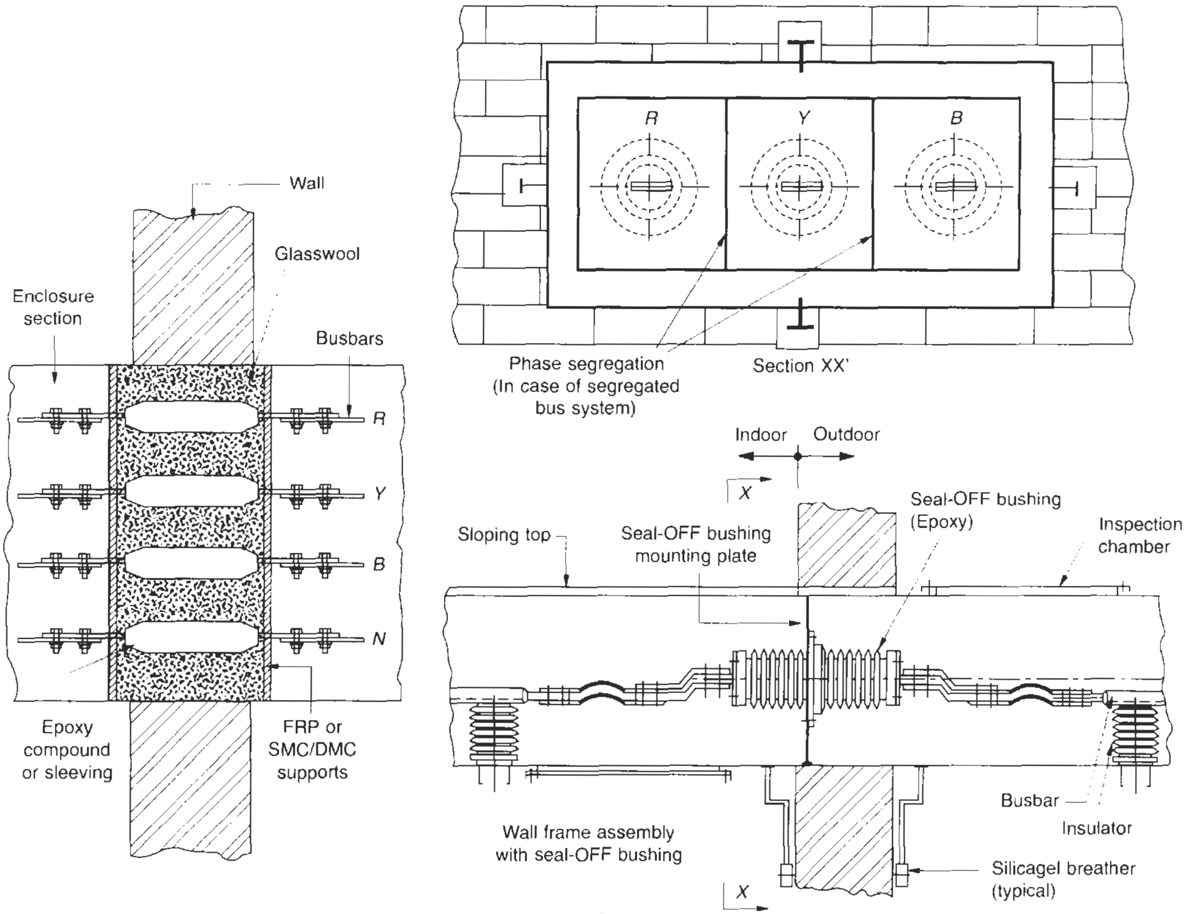

(a) For LT systems

(b) For HT systems

Figure 28.11 Wall frame assembly with seal-OFF bushing

the main cause of a high voltage drop. Skin and proximity effects play a vital role in affecting the resistance and reactance of such systems. We discuss these aspects briefly below.

28.6.3 Skin and proximity effects on a current-carrying conductor

In a d.c. system the current distribution through the cross-section of a current-carrying conductor is uniform as it consists of only the resistance. In an a.c. system the inductive effect caused by the induced-electric field causes skin and proximity effects. These effects play a complex role in determining the current distribution through the cross-section of a conductor. In an a.c. system, the inductance of a conductor varies with the depth of the conductor due to the skin effect. This inductance is further affected by the presence of another current-carrying conductor in the vicinity (the proximity effect). Thus, the impedance and the current distribution (density) through the cross-section of the conductor vary. Both these factors on an a.c. system tend to increase the effective resistance and the impedance of the conductor, and cause a higher $I_{ac}^2 \cdot R_{ac}$ loss, and a higher voltage drop $I_{ac} \cdot Z$, and reduce its current-carrying capacity. An a.c. system is thus more complex than a d.c. system and requires far more care when designing it for a particular requirement. While these phenomena may be of little relevance for a low-current system, they assume significance at higher currents and form an essential parameter to design a high current-carrying system say, 1600 A and above. These phenomena are discussed briefly below.

28.7 Skin effect

A current-carrying conductor produces an electric field around it which induces a back e.m.f. and causes an inductive effect. This e.m.f. is produced in the conductor by its own electric field cutting the conductor. It is more dense at the centre and becomes less at the surface. The conductor thus has a higher inductance at the centre than at the surface, and causes an uneven distribution of current

Table 28.6 Heat dissipation factor

	Enclosure	*Cross-sectional area of busbars ÷ cross-sectional area of enclosure*	*Derating factor*
1	Outdoors	< 1%	0.95
		5%	0.90
		10%	0.85
2	Indoors, where the enclosure is in a well-ventilated room	< 1%	0.85
		5%	0.75
		10%	0.65
3	Indoors, where the enclosure is poorly ventilated and the room temperature is high	< 1%	0.65
		5%	0.60
		10%	0.50

Notes

1. Intermediate values can be obtained by interpolation.
2. These deratings are meant only for non-magnetic enclosures, where the heat generated is only through induced electric currents (I^2R) and hence low. There are no hysteresis or eddy current losses.
3. For MS enclosures, which will have both hysteresis loss ($\propto B^{1.6}$) and eddy current loss ($\propto B^2$), a higher derating factor must be considered. The following text will clarify this aspect.

through its own cross-section. The current tends to concentrate at the outer surface of the conductor, i.e. its 'skin', shares more current than the other parts of the conductor and reduces with depth. It is lowest at the nucleus. For more than one conductor per phase all the conductors together may be considered as forming a large conductor for the purpose of analysing the skin effect. Now the bulk of the current will be shared by the end conductors and only partly by the middle conductors. Figure 28.12 demonstrates an approximate sharing of current and the heat generated in one, two, three and four flat sections per phase, placed in vertical disposition, in an almost isolated plane, where they have no or only a negligible effect of proximity.

Note

These current sharings are only indicative. The actual current sharing will depend upon the thickness, the width and the configuration of the conductors. Refer to Tables 30.2, 30.4 and 30.5.

The phenomenon uneven distribution of current within the same conductor due to the inductive effect is known as the 'skin effect' and results in an increased effective resistance of the conductor. The ratio of a.c. to d.c. resistance, R_{ac}/R_{dc}, is the measure of the 'skin effect' and is known as the 'skin effect ratio'. Figure 28.13(a) illustrates the skin effect for various types and sizes of aluminium in flat sections. For easy reference, the skin effects in isolated round (solid or hollow) and channel conductors (in box form) are also shown in Figures 28.13(b) and (c) respectively.

Tables 30.7, 30.8 and 30.9 for rectangular, tubular and channel sections respectively, give the d.c. resistance and the reactance values between two aluminium conductors of small and medium current ratings of any two adjacent phases, with a centre-to-centre spacing of 305 mm or more, when the proximity effect is considered almost negligible in these ratings.

Since the skin effect results in an increase in the effective resistance of the busbar system it directly influences the heating and the voltage drop of the conductor and indirectly reduces its current-carrying capacity. If R_{ac} is the resistance as a result of this effect then the heat generated

$$= I_{ac}^2 \cdot R_{ac}$$

where I_{ac} is the permissible current-carrying capacity of the conductor on an a.c. system to keep the same heating

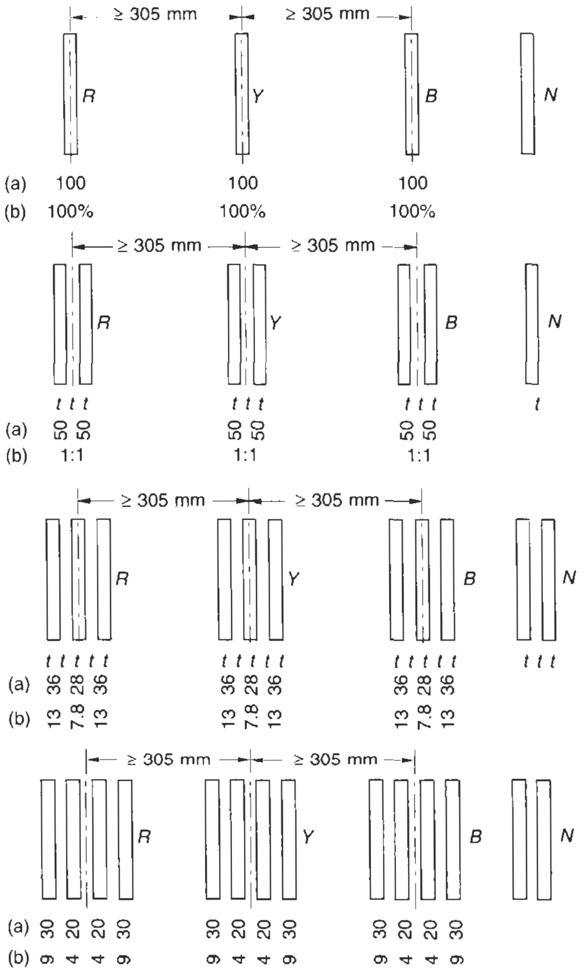

(a) Current sharing %

(b) Heat generated (I^2R) ratio

Note Each phase is considered in isolation not influenced by proximity effect

Figure 28.12 Skin effect in different bus sections of the same phase effect as on a d.c. system then the reduction in the current rating due to the skin effect can be deduced by equating the two heats, i.e.

$$I_{ac}^2 \cdot R_{ac} = I_{dc}^2 \cdot R_{dc}$$

or

$$I_{ac} = I_{dc} \cdot \sqrt{\frac{R_{dc}}{R_{ac}}} \qquad (28.5)$$

The skin effect can be minimized by employing different configurations and arrangement of busbars, as discussed later and illustrated in Figure 28.14. It can also be minimized by selecting hollow round or hollow rectangular (channels in box form) conductors, and thus concentrating the maximum current in the annulus and optimizing metal utilization. For current ratings in round and channel sections, refer to Tables 30.8 and 30.9, respectively.

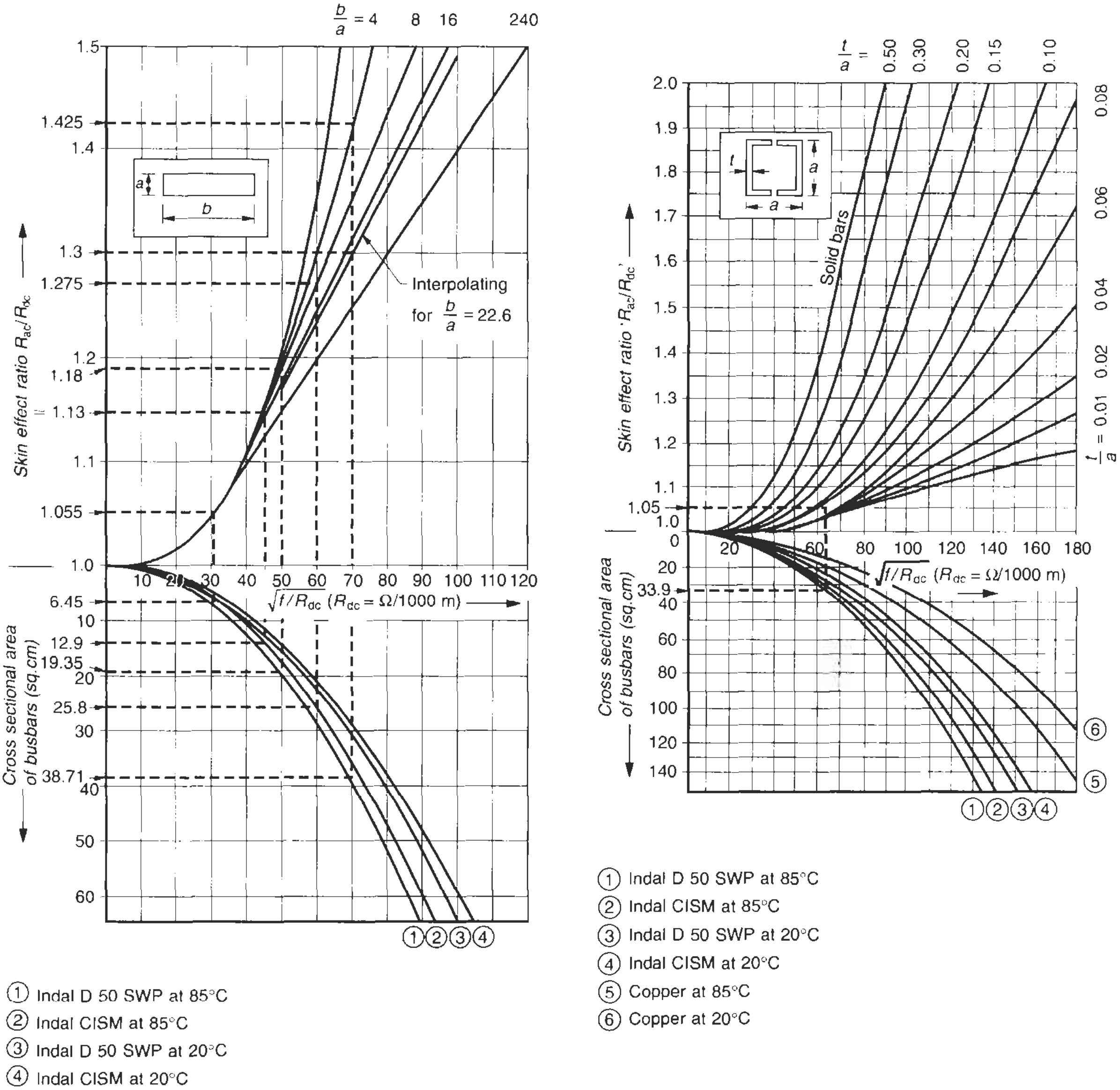

Note
The lower cross sectional area curves relate to f = 50 Hz. For other frequencies $\sqrt{f/R_{dc}}$ must be calculated by multiplying these values by $\sqrt{f/50}$

(a) Flat bus bars

Note
The lower curves apply for f = 50 Hz only. For other frequencies, $\sqrt{f/R_{dc}}$ must be calculated by multiplying these values by $\sqrt{f/50}$

(b) Channels in box form

Figure 28.13(a) Skin effect in isolated rectangular busbars. (neglecting the proximity effect) (Courtesy: I?ndian Aluminium Co. based Alcon of Canada)

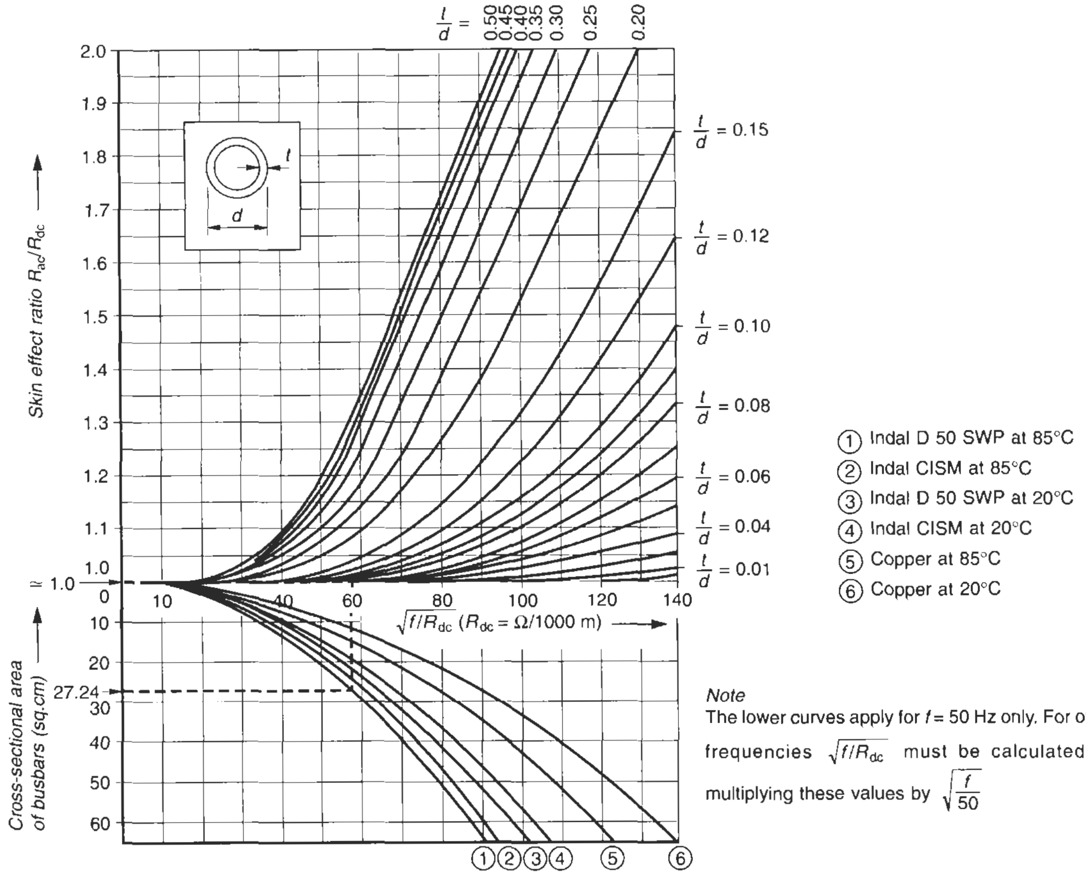

Note
The lower curves apply for $f = 50$ Hz only. For other frequencies $\sqrt{f/R_{dc}}$ must be calculated by multiplying these values by $\sqrt{\frac{f}{50}}$

Figure 28.13(b) Skin effect in isolated tubular conductors

Example 28.5
If there is a rise of 5% in the effective resistance of the busbars due to the skin effect, then the a.c. rating will be

$$= \sqrt{\frac{R_{dc}}{1.05 \cdot R_{dc}}}$$

= 0.976 or 97.6% that of the d.c. rating.

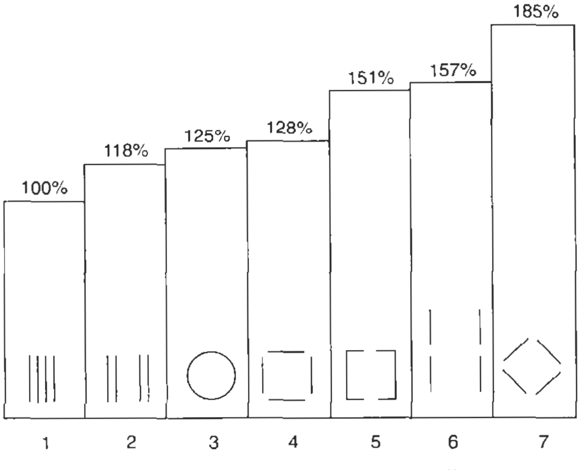

Figure 28.14 Ratio of a.c. current ratings for different configurations of busbars of the same cross-sectional area (Courtesy: The Copper Development Association, U.K.)

28.7.1 Skin effect analysis

When a number of flat bars are used in parallel their effective current-carrying capacity is the result of the cumulative effect of the restricted heat dissipation and the increased content of the skin effect. A stage may arise when further addition of any more bars may not appreciably increase the overall current-carrying capacity of such a system. Referring to Tables 30.2, 30.4 and 30.5, we can observe a wide variation in the current-carrying capacity of a conductor when it is added to an existing system of one, two or three conductors per phase, depending upon the thickness and width of the conductors. Thinner sections of shorter widths provide better metal utilization, compared to a thicker section and larger widths. Use of bars up to four sections per phase is quite common for higher current systems (2500 A–3200 A). For still higher current ratings, use of more than four bars in parallel is not advisable due to an extremely low utilization of metal, particularly in larger sections. While larger sections would be imperative for such large ratings, their own rating would fall to a low of 14–18% of their normal current capacity. (See Table 30.5 for larger sections, providing current ratings up to six bars in parallel.) In such cases it is advisable to arrange the bars in any other convenient configuration than in parallel, as illustrated in Figure 28.14 or to use round or channel sections to achieve better results and a higher level of metal utilization.

28.7.2 Determining the skin effect

As a result of the electric field around the conductors the frequency of the system has a very significant bearing on the skin effect. The various curves as established through experiments and, as reproduced in Figures 28.13 (a), (b) and (c) respectively for rectangular, tubular and channel conductors, are thus drawn on the $\sqrt{f/R_{dc}}$ basis. At 50 Hz, the value of the skin effect, R_{ac}/R_{dc}, can be read directly from these curves, as the curves for different cross-sectional areas and conductivity, at 50 Hz, have also been drawn in the lower part of the figure.

Ratings of up to 3200 A are normally required for distribution purposes such as for interconnecting a distribution transformer to a PCC, or a large PCC to another large PCC in a sub-station. Common practice for making such connections is to use rectangular cross-sections, which are easy to handle, manoeuvre and make joints, compared to a channel or a tubular section. Channel and tubular sections require special tools and skilled workers, particularly when bending or making joints and end terminations. However, suitable fittings and fixtures, some of which are shown in Figure 28.15 (a) and (b), are also provided by leading aluminium section manufacturers as standard practice to facilitate such connections. The welding of such joints will require special welding equipment and adequate in-house testing facilities to check the quality of weld. It is, however, recommended to use such sections, for ratings 3200 A and above, for better utilization of active metal compared to flat sections. We briefly deal with such sections as follows.

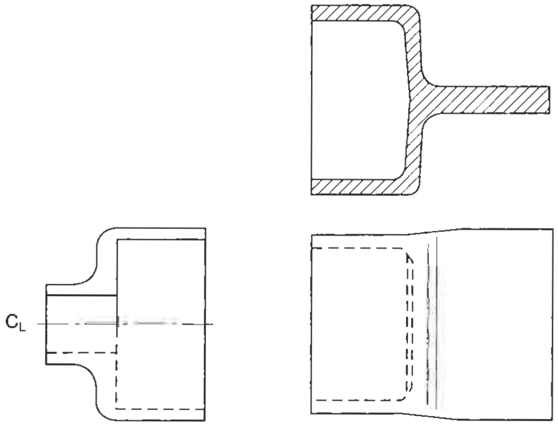

Tube reducer

Tube for flat connection

(a) For a tubular section

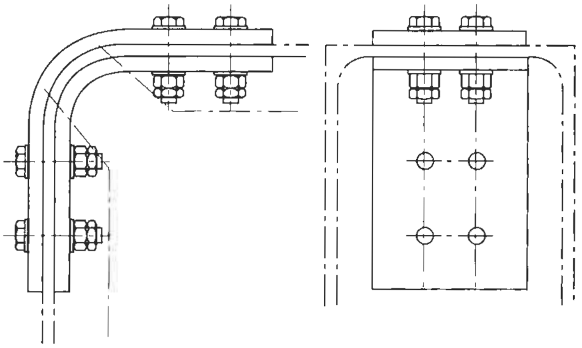

90° Horizontal splice plates. Bolting arrangement will vary with the size of channel

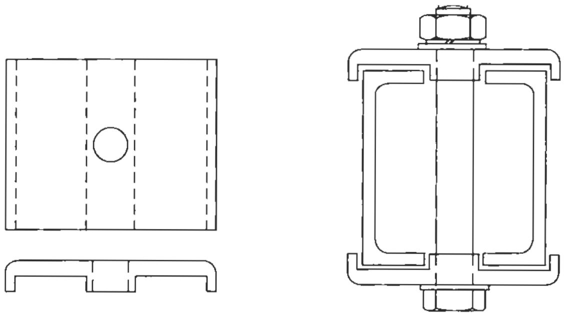

Spacer clamp

(b) For a channel section in box form

Figure 28.15 Typical fittings for different busbar sections

(i) Rectangular sections

Example 28.6
Consider a section of 101.6 mm × 6.35 mm of grade EIE-M as in Figure 28.16. From Table 30.7 for its equivalent grade CIS-M

(i) $R_{dc} = 44.55\ \mu\Omega/\text{m}$ at 20°C

or $44.55 \times 1000 \times 10^{-6}\ \Omega/1000$ m

i.e. $0.0445\ \Omega/1000$ m

Area of cross-section $= 101.6 \times 6.35 \times 10^{-2}\ \text{cm}^2$

$= 6.4516\ \text{cm}^2$

Since the operating temperature should be considered to be 85°C,

$$R_{dc} \text{ at } 85°\text{C} = R_{dc20}\,[1 + \alpha_{20}(\theta_2 - \theta_1)] \qquad (28.6)$$

where

α_{20} = temperature coefficient of resistance for CIS-M grade of aluminium from Table 30.1,

= 0.00403 Per °C at 20°C

R_{dc20} = d.c. resistance at 20°C

θ_2 = Operating temperature = 85°C

θ_1 = Since the value of R_{dc} is available at 20°C therefore, θ_1 = 20°C.

R_{dc} at 85°C = 0.0445 [1 + 0.00403 (85 – 20)]

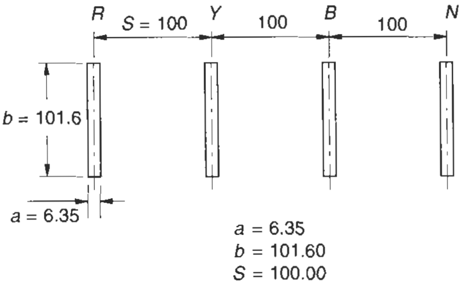

Figure 28.16 Illustration of example 28.6

$$= 0.0445\ (1 + 0.26195)$$

$$= 0.056\ \Omega/1000\ \text{m}$$

Now refer to Figure 28.13(a) to obtain the skin effect ratio R_{ac}/R_{dc}. Consider the cross-sectional curves for EIE-M grade of flat busbars at an operating temperature of 85°C for a cross-sectional area of 6.45 cm^2 and determine the R_{ac}/R_{dc} ratio on the skin effect curve having

$$b/a = 101.6/6.35 = 16.$$

$$\therefore \frac{R_{ac}}{R_{dc}} = 1.055$$

i.e. an increase of almost 5.5%, due to the skin effect alone and

$$R_{ac} = 1.055 \times 0.056$$

$$= 0.059\ \Omega/1000\ \text{m}$$

(ii) Skin effect for more than one conductor per phase

In such cases, the group of busbars in each phase may be considered to be one large conductor and outside dimensions a and b as illustrated in Figure 28.8 measured for all calculations.

Example 28.7
Consider a four-conductor system of section 101.6 mm × 6.35 mm in each phase (Figure 28.17(a)) of grade EIE-M for carrying a current of 2000 A.

R_{dc} : As calculated above for one section of bus

= 0.056 ohm/1000 m per conductor of four bus-sections in parallel

Skin effect ratio R_{ac}/R_{dc} from the graph of Figure 28.13(a), at an operating temperature of 85°C for a cross-sectional area of 25.8 cm^2 (4 × 101.6 × 0.635) for an EIE-M grade of aluminium having

$$\frac{b}{a} = \frac{101.60}{44.45} \simeq 2.29$$

$$R_{ac}/R_{dc} \simeq 1.33$$

$$\therefore\ R_{ac} \text{ for the phase } = \frac{1}{4} \times 1.33 \times 0.056$$

$$= 18.62 \times 10^{-3}\ \Omega/1000\ \text{m}$$

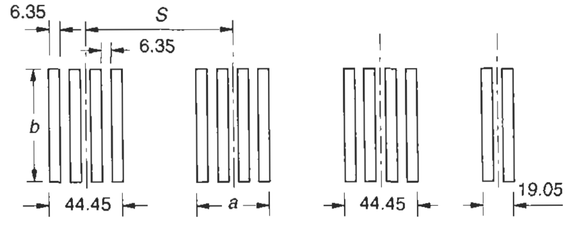

All dimensions in mm.

a = 44.45
b = 101.60
S = 184.45 (It is recommended to be min. 300)

Figure 28.17(a) Illustration of Example 28.7

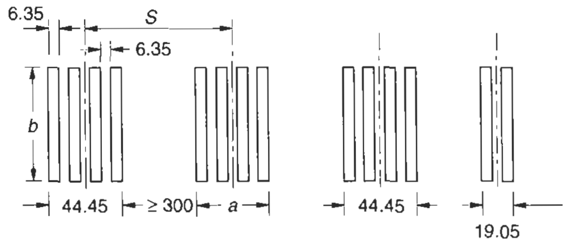

Figure 28.17(b) Minimizing the effect of proximity in thicker sections (Section 28.8.4)

(iii) Busbar configurations

(To improve heat dissipation and minimize the skin effect) The busbars may be arranged in different configurations as shown in Figure 28.14 to improve heat dissipation and reduce the skin effect as well as the proximity effect. The improvement in the ratings is indicative of the cooling and skin effects with different configurations. When a number of bars are used in parallel, each bar shields the adjacent bar and reduces its heat dissipation. Moreover, together they form a large conductor and the current will tend to concentrate at the outer surfaces only, due to the skin effect. It will cause inner surfaces to share smaller and the outer surfaces the larger currents. In configurations other than parallel bars, an attempt is made to improve heat dissipation and reduce the skin effect. It is obvious that most of the conductors are now sufficiently independent of the others and can carry higher currents.

28.8 Proximity effect

If there is more than one current-carrying conductor other than of the same phase, placed adjacent to each other, so that the electric field produced by one can link the other, mutual induction will take place. The magnitude of this will depend upon the amount of current and the spacing between the two. This tends to further distort the self-resistance of the conductor over and above the distortion already caused by the skin effect current distribution through its cross-section. Figure 28.18(a), (b) and (c) illustrate diagrammatically distortion of current flow in a round conductor and also the mechanical forces exerted on the conductors, due to this distorted current distribution. There is always a force between two current-carrying conductors placed adjacent to each other, whether it is a d.c. or an a.c. system. The proximity effect, however, will exist only in an a.c. system due to mutual induction between the two current-carrying conductors. It may be less pronounced in low current systems, say, 1600 A or less, and all HT systems, where the spacings between the phases is considerably more, except their effect on the enclosure, which is discussed in Chapter 31 on isolated phase bus systems. If the second conductor carries current in the same direction, such as in a three-phase system (Figure 28.18(b)) the current will flow in the remote parts of the two conductors. If the current flows in the opposite direction, as in a single-phase system (Figure 28.18(c)) the current will flow in the adjacent parts of the two conductors.

The displacement of current and the forces (equation (28.4)) on the conductors are two different effects. The effect of current displacement is to increase the effective resistance and the impedance of the conductor on one side, as illustrated in Figure 28.18(b) and (c) and cause a distortion in its heating pattern. This will lead the various conductors of a particular phase to operate at different temperatures and add to $I_{ac}^2 \cdot R_{ac}$ losses. The rating of all the conductors of one phase must therefore be determined by the hottest conductor. The distortion of current will also distort the heat produced. The area having high current density will produce higher heat. The proximity effect thus also causes a derating in the current-carrying capacity of a conductor.

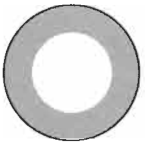

(a) Uniform current distribution in an isolated conductor or a d.c. conductor

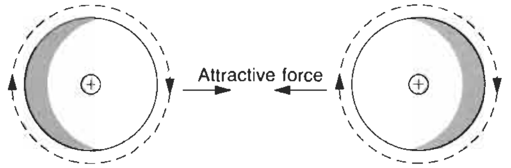

(b) Distortion in current distribution when the currents are in the same direction, like a 3-ϕ system

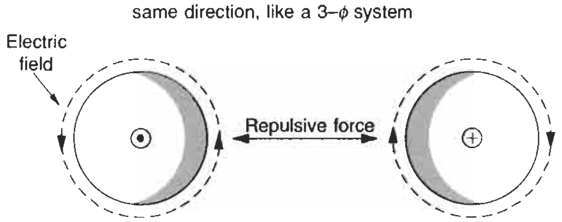

(c) Distortion in current distribution when the currents are in opposite directions, like a 1-ϕ system

Note

1. ⊕ ⊙ – Direction of current in a conductor looking from top.
⊙ – Current coming out
⊕ – Current going in.
2. Direction of electric field by Cork-Screw rule.

Figure 28.18 Current distribution in round conductors, illustrating the effect of proximity

In general, the proximity effect is directly proportional to the magnitude of the current and inversely to the spacing between the two conductors. The smaller the phase spacing, the greater will be the effect of proximity as well as the derating and the greater will be the forces developed between the adjacent conductors (equation (28.4)). But the reactance of the two phases is directly proportional to the spacing. Reactance is the main cause of an excessive voltage drop (IZ). The smaller the spacing, the lower will be the reactance, due to the proximity effect and vice versa. While the requirement of a lower reactance will require less spacing and will mean higher forces, demanding stronger busbar supports and mounting structure, requiring a lower effect on current-carrying capacity would require a larger spacing between the phases, which would result in a higher reactance and consequently a higher voltage drop. But a high reactance would help to reduce the level of fault current, I_{sc} and also forces, F_m, between the conductors.

A compromise is therefore struck to meet both needs and obtain a more balanced system or other methods adopted, as discussed in Section 28.8.4, to reduce the skin and proximity effects.

28.8.1 Proximity effect in terms of busbar reactance

Reactance, X_a, of the conductors plays a significant role in transmitting the power through a bus system from one end to the other. For long bus systems, it must be ascertained at the design stage whether the voltage drop in the total bus length on account of this will fall within the permissible limits, particularly for higher ratings, (2000 A and above) besides the current-carrying capacity. A higher reactance will mean a higher drop. For smaller ratings and shorter lengths, as well as HT systems, this drop would be too low as a percentage of the rated voltage, to be taken into account. For higher ratings, however, it may assume a greater significance and precautionary measures may become necessary to restrict it within permissible limits. To determine X_a, proximity effect curves have been established by conducting tests on the metal and are available for all sections, configurations and spacings of busbars. We have reproduced* them for a 50 Hz system (for a 60 Hz system, $X_{a60} = X_{a50} \cdot 60/50$ or $1.2 X_{a50}$), for rectangular sections as in Figure 28.19(a), tubular sections as in Figure 28.19(b) and channel sections in box form as in Figure 28.19(c). A brief procedure to determine the reactances with the help of these curves is given below.

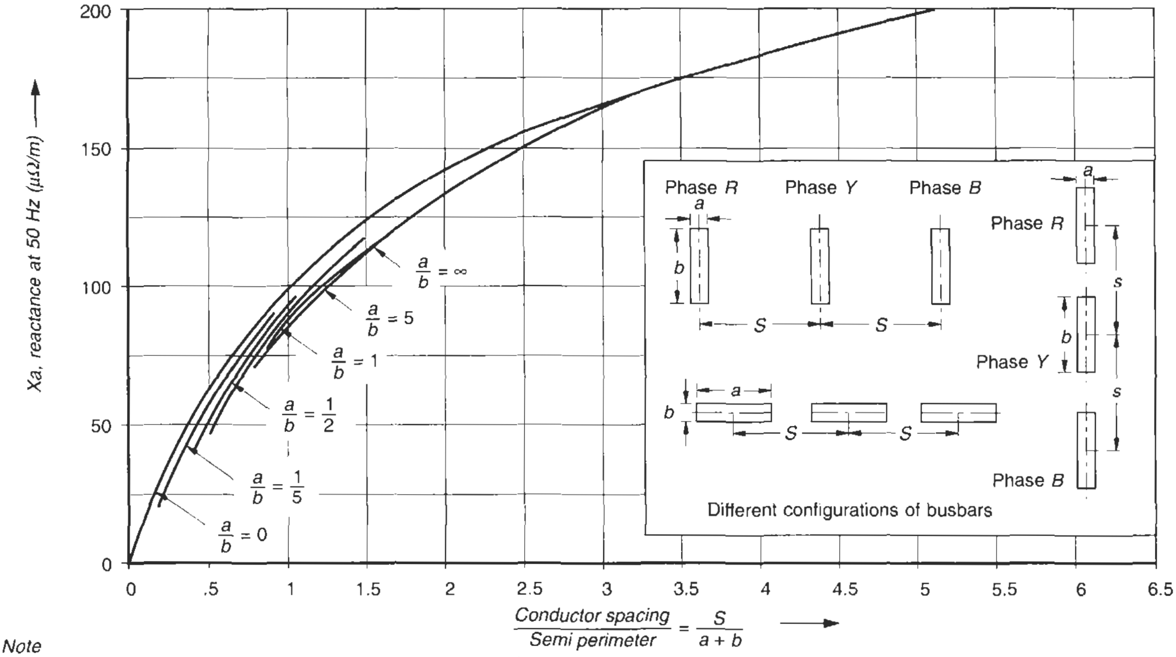

Note

1. For 3–ϕ systems read reactance against → $\left[1.26 \cdot \dfrac{s}{a+b}\right]$
2. The reactance varies with the ratio $\dfrac{\text{'}a\text{'}}{b}$ and therefore there may be a number of possible busbar combinations and the corresponding curves for different $\dfrac{\text{'}a\text{'}}{b}$. However, only a few curves have been drawn for the likely minimum and the maximum values of $\dfrac{\text{'}a\text{'}}{b}$. Since the variation is not large therefore by interpolation the more pertinent value of reactance can be determined from these curves.

Figure 28.19(a) Reactance of rectangular busbars at 50 Hz on account of proximity effect

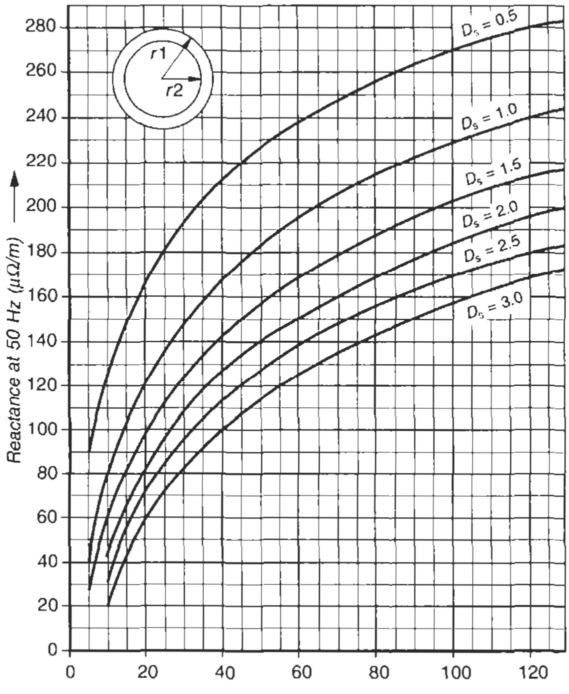

Figure 28.19(b) Reactance of tubular busbars for single-phase or three-phase systems at 50 Hz

Rectangular sections (Figure 28.19(a))

The reactance is drawn as a function of

$$\frac{\text{Centre spacing ('}S\text{')}}{\text{Semi-perimeter }(a+b)}$$

At lower spacings this value will be influenced by the width (b) and the thickness (a) of the conductor. At lower spacings, therefore, proximity curves are different for different ratios of a/b whereas for larger spacings they approach the same curve.

When more than one section is used together, to make larger ratings, all the sections of one phase may be considered to be one large section. The dimensions *a* and *b* of the whole section are now considered as one conductor, as illustrated in Figure 28.8.

The reactance thus obtained can be doubled for single-phase systems. For a three-phase system the configuration of the three phases with respect to each other will play a significant role and the linear centre spacing *S* has to be modified to an effective or geometric mean spacing S_e, where

$$S_e = (S_a \cdot S_b \cdot S_c)^{1/3} \qquad (28.7)$$

For configuration (a) of Figure 28.20

$$S_a = S_b = S$$

$$S_c = 2S$$

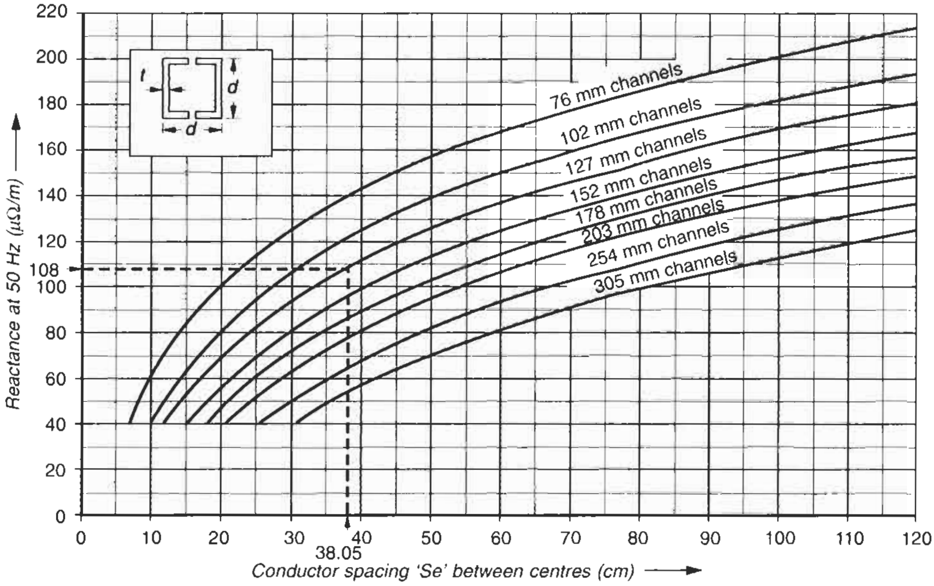

Figure 28.19(c) Reactance of channel busbars, two channels per phase in box form, single-phase or three-phase, at 50 Hz

$$\therefore \quad S_e = S \cdot (2)^{1/3}$$
$$= 1.26\ S$$

and for configuration (b) of Figure 28.20

$$S_a = S_b = S_c = S$$
$$\therefore \quad S_e = S$$

For any configuration, the effective spacing, S_e, may thus be calculated.

Tubular sections (Figure 28.19(b))

For determining S_e in solid or hollow round sections it is essential to first determine the self geometric mean distance, D_S, of the conductors which varies with the thickness t (annulus) of the conductor. D_S approaches its outer radius, r_1, in an infinitely thin conductor and to $0.778 r_1$ in a solid bar. This variation, in the form of D_S/r_1 is drawn in Figure 28.21, as a function of r_2/r_1.

For very thin conductors, when $r_2 \simeq r_1$, $r_2/r_1 = 1$, D_S/r_1 will also approach unity and $D_S \simeq r_1$. For solid conductors, when $r_2 = 0$, $r_2/r_1 = 0$, D_S/r_1 becomes 0.778 and $D_S = 0.778\ r_1$ etc.

After having obtained the value of D_S, value of S_e is determined as discussed above. The reactance of the conductors can then be obtained from the graphs of Figure 28.19(b) drawn for S_e versus X_a, for varying thicknesses of round conductors. Here also the basic graph will represent a single-phase system, having a reactance of $2 \cdot X_a$. Refer to Example 28.8.

Channel sections (Figure 28.19(c))

These should normally be used in a box form for better mounting, uniformity and metal utilization. The method of determining the reactance for single- and three-phase systems is the same as for rectangular sections (Figure 28.20(a)).

From the proximity curves it may be noted that X_a rises with S. While a higher centre spacing would reduce the effect of proximity on the current-carrying conductors and which is so much desired, it will increase X_a, which would mean a lower p.f. for the power being transferred

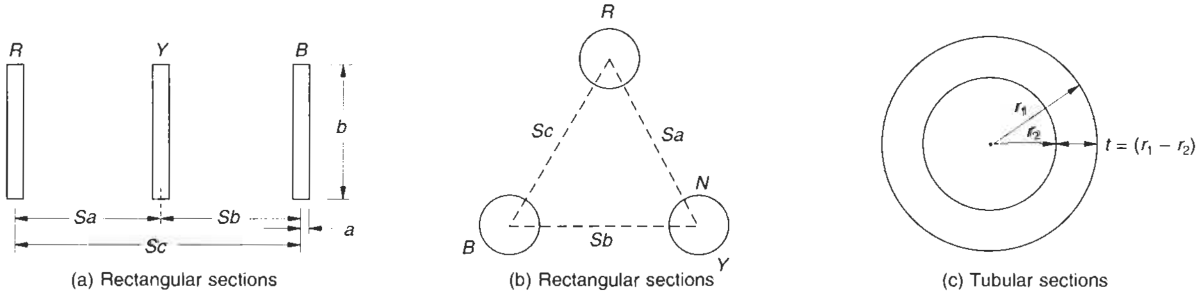

(a) Rectangular sections
(b) Rectangular sections
(c) Tubular sections

Figure 28.20 Influence of conductor configuration on linear spacing S

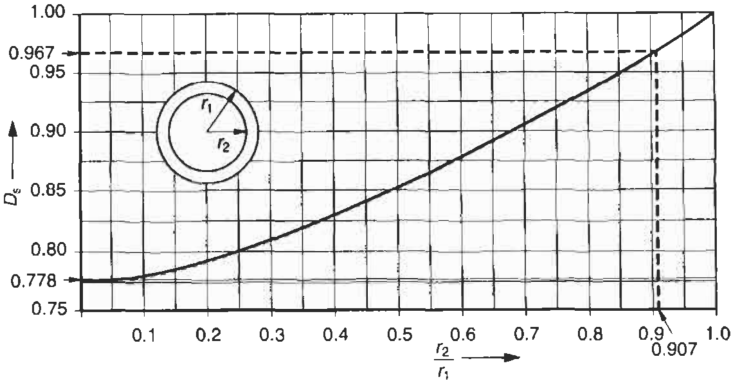

Figure 28.21 Graph to determine D_s of a tubular bus section

(through the busbars) and a higher voltage drop. In LT systems the spacings can be adjusted only marginally to reduce X_a, as a lower spacing would mean a higher electrodynamic force, F_m (equation (28.4)) and greater proximity effects, requiring higher busbar deratings. A compromise may therefore be drawn to economize on both. In HT systems, however, which require a larger spacing, no such compromise would generally be possible and they will normally have a high content of X_a. But in HT systems, voltage drop plays an insignificant role in view of a lower voltage drop as a percentage of the system voltage.

28.8.2 Voltage unbalance as a consequence of the proximity effect

The proximity effect does not end here. It still has some far-reaching consequences in terms of unequal voltage drops in different phases at the same time. This is more so on large LT current-carrying, non-isolated bus systems of 2000 A and above, resulting in an unbalance in the supply voltage, as discussed below.

A three-phase system has three current-carrying conductors in close proximity. While the conductors of phases R and B will have an almost identical impedance, with the same skin and the proximity effects, the conductor of phase Y is under the cumulative effect of electric fields of the other two phases, which would offset their proximity effects (see Figure 28.22). The conductor of phase Y therefore would carry no distortion beyond the distortion already caused by the skin effect (R_{ac}/R_{dc}). The result of this would be that in a balanced three-phase system the three phases will assume different impedances and cause an unbalance in the current distribution. The Y phase having a smaller impedance, would share more current compared to the R and B phases and cause a smaller voltage drop. Such an effect may not be as pronounced in lower ratings and shorter lengths of current-carrying conductors, as on higher currents, depending upon the spacing between the phases and the length of the system.

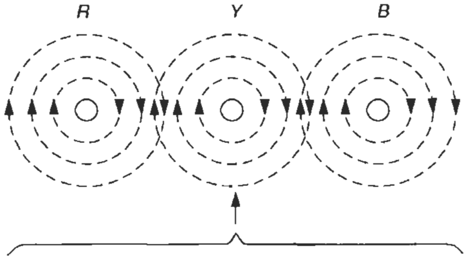

Influence of electric fields of conductors R and B is offset in a 3-ϕ system. The proximity effect in phase Y therefore gets nullified

Figure 28.22 Influence of proximity

Consider a feeding line from a transformer to a power switchgear through a bus duct. The voltage available at the distribution end of this feeding line may be unequal and tend to cause a voltage unbalance. Depending upon the rated current and length of the feeding line, it may even cause a voltage unbalance beyond permissible limits (Section 12.2) and render the system unstable and in some cases even unsuitable for an industrial application.

For larger current systems, 2000 A and above and lengths of over 50 m, a correct analysis for such an effect must be made and corrective measures taken to equalize the voltage and current distribution in all the three phases. Where adequate precautions are not taken at the design stage through phase interleaving or transposition techniques, as discussed later, the problem can still be solved by making up for the lost inductance in the Y phase by introducing an external inductance of an appropriate value in this phase. It is possible to do this by introducing a reactor core into this phase, as illustrated in Figure 28.23. This inductor will compensate for the deficient inductance and equalize the impedances in all three phases, thus making the system balanced and stable. We illustrate briefly later a procedure to determine the size of a saturable reactor core, when required, to meet such a need.

Example 28.8

Consider Example 28.6 to determine the content of proximity;
(i) For reactance X_a on account of the proximity effect, use Figure 28.16 and the graph of Figure 28.24:

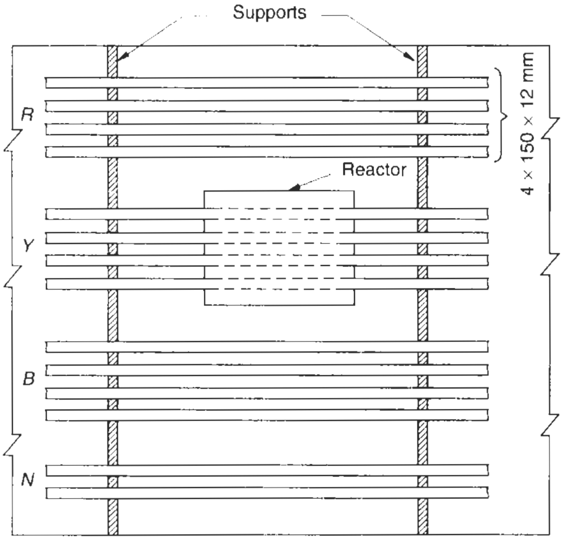

Figure 28.23 Balancing of phase currents in a large three-phase system by introducing a reactor in the middle phase

$$1.26\,\frac{S}{a+b} = 1.26 \times \frac{100}{(101.6 + 6.35)}$$

$$= 1.26 \times \frac{100}{107.95} \simeq 1.167$$

and $$\frac{a}{b} = \frac{6.35}{101.6} = 0.0625$$

then from the graph

$X_a = 106\ \mu\Omega/\text{m}$ or $106 \times 10^{-6} \times 1000\ \Omega/1000\ \text{m}$

i.e. $\quad 0.106\ \Omega/1000\ \text{m}$ and

(ii) $\quad$ Impedance $Z = \sqrt{R_{ac}^2 + X_a^2}$

$$= \sqrt{(0.059^2 + 0.106^2)}\ \Omega/1000\ \text{m}$$

$$= 0.12\ \Omega/1000\ \text{m}$$

(iii) Voltage drop

If we consider the average current-carrying capacity of this section as 1000 A, after normal deratings (without a derating 1235 A from Table 30.4), then the voltage drop during normal running, say, for a 150 m length of this section of busbar

$$= 1000\ \text{A} \times 0.12 \times \frac{150}{1000}\ \text{volts}$$

$$= 18.0\ \text{V}$$

which is around 4.3% of a 415 V system. Such a high voltage drop, although less than 5% and normally permissible, may not be advisable in this case, since in addition to this drop there may be further voltage drops in the connecting cables, resulting in a higher drop than 5% up to the connected load. It is also possible that the voltage at the receiving end itself was already a little less than rated, due to drops in the upper network.

This example is considered only to emphasize the significance of voltage drops in current-carrying conductors, particularly when the system load is high and the end distribution is distant from the receiving end. In normal practice, however, consideration of a voltage drop in a bus system may not be of much significance, due to the generally short lengths of the bus ducts, which may not be more than 30–40 m in most of installations, irrespective of the size of the feeding transformer. However, if such a situation arises, as in

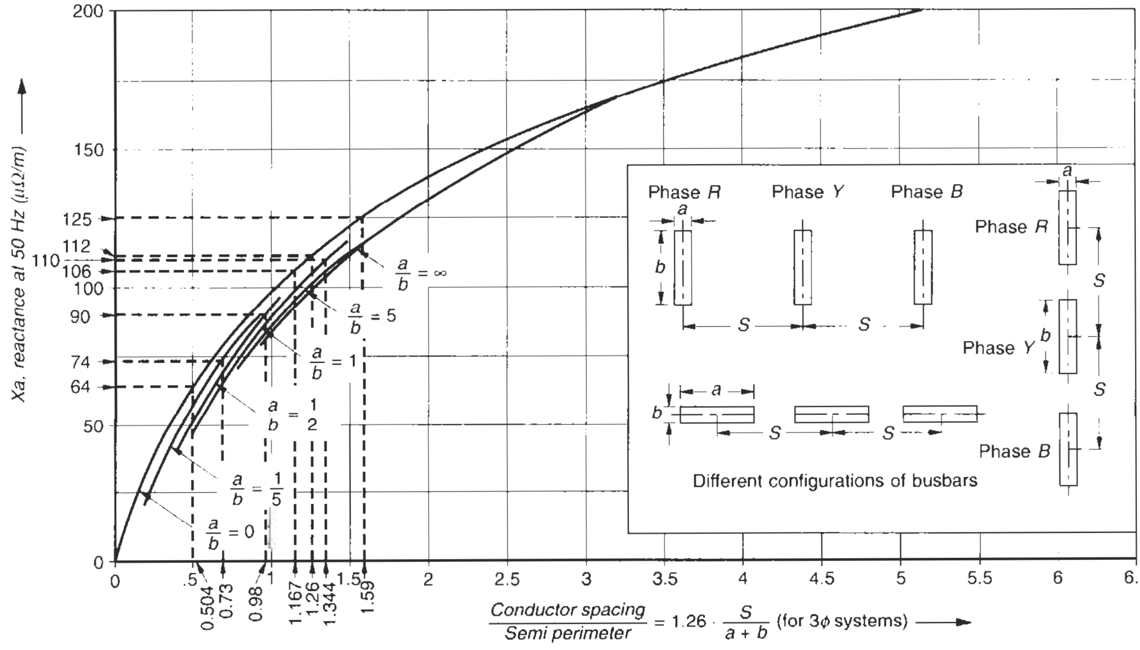

Figure 28.24 Reactance of rectangular busbars at 50 Hz on account of proximity effect

this particular instance, one may reduce the content of X_a by reducing S if permissible, or consider the next higher cross-section of busbars. This size of bus section, in this particular instance, may be considered for a current rating up to 800 A.

Example 28.9

Consider Example 28.7 to determine the effect of proximity:

(i) For the configuration of Figure 28.17(a)

$$\frac{a}{b} = \frac{44.45}{101.60} = 0.4375$$

$$1.26\frac{S}{a+b} = 1.26 \times \frac{184.45}{44.45 + 101.60} \simeq 1.59$$

then X_a, due to the proximity affect from the graph of Figure 28.24,

$= 125\ \mu\Omega/\text{m}$

or $0.125\Omega/1000$ m per phase and

(ii) impedance, $Z = \sqrt{0.0186^2 + 0.125^2}$

$= 0.126\ \Omega/1000$ m per phase and

(iii) voltage drop, considering a length of busbars as 40 m and current rating as 2000 A,

$= 2000 \times 0.126 \times \dfrac{40}{1000}$

$= 10.08$ V which is 2.43% for a 415 V system

The bus system is therefore suitable to carry 2000 A up to a length of 40 m. Beyond this the voltage drop may become higher than permissible and the bus rating may call for a derating.

Note

The rating for this section considered here as 2000 A, is hypothetical and must be checked for the various design parameters as discussed already, in Sections 28.5 and 28.6, and analysed in Example 28.12.

Use of a saturable reactor (choke) to balance a large unbalanced power distribution system

Determining the size of reactor

Consider a three-phase bus system as shown in Figure 28.27. If X_s and X_p are the inductive reactances of each phase on account of skin and proximity effects respectively, then the impedances of each of the three phases can be expressed as

$$\overline{Z_R} = \overline{R} + \overline{X_s} + \overline{X_p} = \overline{Z}$$

$$\overline{Z_Y} = \overline{R} + \overline{X}_s = \overline{Z} - \overline{X}_p$$

(since the Y phase will have no proximity effect)

and $Z_B = \overline{R} + \overline{X}_s + \overline{X}_p = \overline{Z}$

Therefore inductive reactance equal to X_p must be introduced into the Y phase to equalize the reactance distribution and make the system balanced (Figure 28.25).

If I_R, I_Y and I_B are the currents in the three phases and V_{ph} the phase voltage then

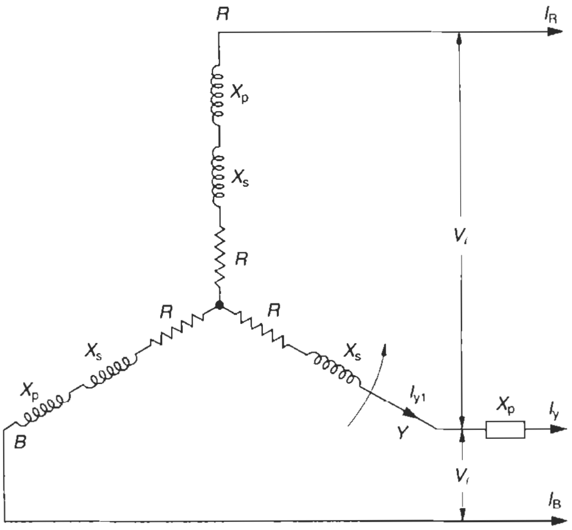

Figure 28.25 Distribution of inductive reactance and impedance of each phase in a three-phase system

$$I_R = I_B = I_r \text{ (say)}$$

and $\quad I_r = \dfrac{V_{ph}}{Z}$ or $Z = \dfrac{V_{ph}}{I_r}$

and $\quad I_y = \dfrac{V_{ph}}{(\overline{Z} - \overline{X}_p)}$

$$= \frac{V_{ph}}{\left(\frac{V_{ph}}{I_r} - X_p\right)}$$

(Basically these are all phasor quantities but for ease of illustration absolute values are considered)

or $\quad I_y = \dfrac{I_r \cdot V_{ph}}{(V_{ph} - I_r \cdot X_p)}$

or $V_{ph} - I_r X_p = \dfrac{I_r \cdot V_{ph}}{I_y}$

$$I_r \cdot X_p = V_{ph} - \frac{I_r \cdot V_{ph}}{I_y}$$

or $\quad X_p = V_{ph}\left(\dfrac{1}{I_r} - \dfrac{1}{I_y}\right) = 2\pi \cdot f \cdot L \qquad (28.8)$

The values of I_r and I_y must be known to determine the value of the reactor, X_p. Otherwise the reactance, X_a, as determined earlier, to account for the proximity effect may be considered as the lost reactance in the Y phase and for which the reactor may be designed for this phase.

Designing a reactor

The self-inductance

$L = \dfrac{\phi \cdot Z_c}{I_r}$ henry

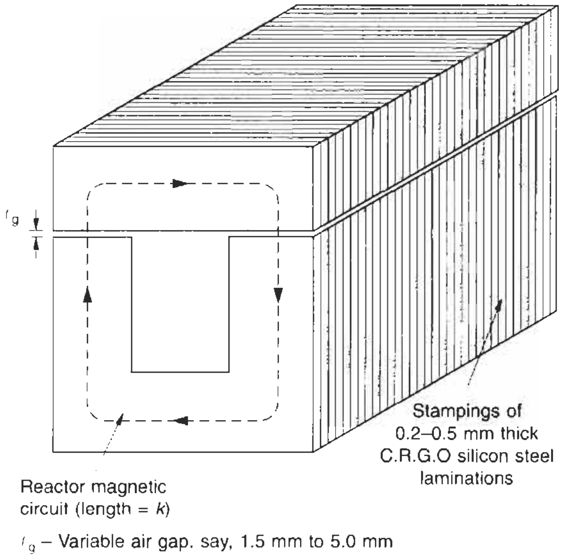

Figure 28.26 A typical reactor core

where

L = self-inductance of the choke in henry (H)
ϕ = flux produced in Weber (wb)
I_r = rated current in Amps
Z_c = number of turns in the choke = 1
(since it will be used like a bar primary, as shown in Figure 28.26)

Total reluctance R_l of the magnetic circuit of the choke

$$= \frac{\text{MMF}}{\phi} = \frac{Z_c \cdot I_r}{\phi}$$

since $\phi = \dfrac{L \cdot I_r}{Z_c}$

$$\therefore \quad R_l = \frac{Z_c \cdot I_r}{L \cdot I_r} \cdot Z_c \text{ or } \frac{Z_c^2}{L}$$

The total reluctance of an iron choke (Figure 28.26) can also be expressed by $R_l = R_{\text{air}} + R_{\text{core}}$

where R_{air} = reluctance of the air gap

$$= \frac{2l_g}{\mu_0 A}$$

and R_{core} = reluctance of the iron path

$$= \frac{k - 2\,l_g}{\mu_o \cdot \mu_r \cdot A}$$

$$\therefore \qquad R_l = \frac{2\,l_g}{\mu_o \cdot A} + \frac{k - 2\,l_g}{\mu_o \cdot \mu_r \cdot A} \tag{28.9}$$

where

l_g = length of the air gap in metres (Figure 28.26)
μ_o = permeability* of air (free space) = $4\pi \cdot 10^{-7}$ H/m
μ_r = relative permeability of the silicon steel used for the laminations in H/m

A = area of cross-section of core in square metres
k = total length of the magnetic circuit in metres

$$\text{or} \qquad R_l - \frac{k}{\mu_o \cdot \mu_r \cdot A} = \frac{2\,l_g}{\mu_o \cdot A}\,[1 - 1/\mu_r\,]$$

$$\text{or} \quad \frac{(R_l \cdot \mu_o \cdot \mu_r \cdot A - k)}{\mu_o \cdot \mu_r \cdot A} = \frac{2\,l_g(\mu_r - 1)}{\mu_o \cdot \mu_r \cdot A}$$

$$\text{or} \qquad l_g = \frac{(R_l \cdot \mu_o \cdot \mu_r \cdot A - k)}{2 \cdot (\mu_r - 1)}$$

where

$$\mu_r = \frac{\mu}{\mu_o}$$

and μ is a design parameter for the silicon steel and $= B/H$.

where
B = flux density in wb/m^2
and H = magnetic field strength in A/m

It may be observed that the value of permeability is a function of the flux density being attained to energize the magnetic circuit. It is therefore not a constant parameter and is measured at a particular flux density.

Example 28.10

Consider a bus duct having a rated current of 4000 A and an unbalanced current in the middle phase of 4400 A. Determine the size of the reactor to achieve a balanced voltage system.

Solution

If the line voltage = 440 V

then $V_{\text{ph}} = 440/\sqrt{3} = 254$ V

$$\therefore\ X_p = 254 \times \left(\frac{1}{4000} - \frac{1}{4400}\right)$$

$$= \frac{254 \times 400}{4000 \times 4400}\,\Omega$$

$= 0.00577 = 2 \times \pi \times 50 \times L$ (for a 50 Hz system)

$$\text{or} \quad L = \frac{0.00577}{2 \times 3.14 \times 50}\ \text{H}$$

$$= 18.38 \times 10^{-6}\ \text{H}$$

$$\therefore \text{ Total flux } \phi = \frac{L \times I_r}{Z_c}$$

$$\text{i.e.} \quad \phi = \frac{18.38 \times 10^{-6} \times 4000}{1}\ \text{wb}$$

$$= 73.52 \times 10^{-3}\ \text{wb}$$

Therefore area of cross-section of the core

$$A = \frac{\phi}{B}$$

$$= \frac{73.52 \times 10^{-3}}{1.1} \ (\text{assuming } B = 1.1\ \text{wb/m}^2)$$

$= 66.84 \times 10^{-3}$ square metres.

If we assume the stacking factor of the core laminates to be 0.9, the gross cross-sectional area of the core

---

*Permeability defines the magnetic property of a material, and is a measure of how easily it can be magnetized. The greater the permeability of a material, the easier it is to magnetize.

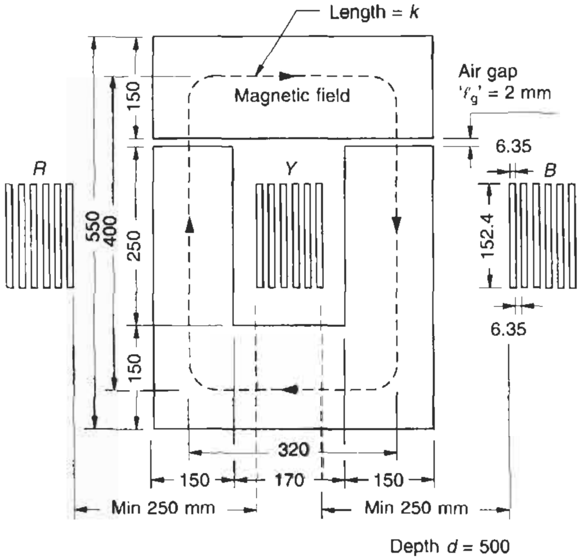

Figure 28.27 Design of a reactor for a power distribution bus system. Illustrating Example 28.10

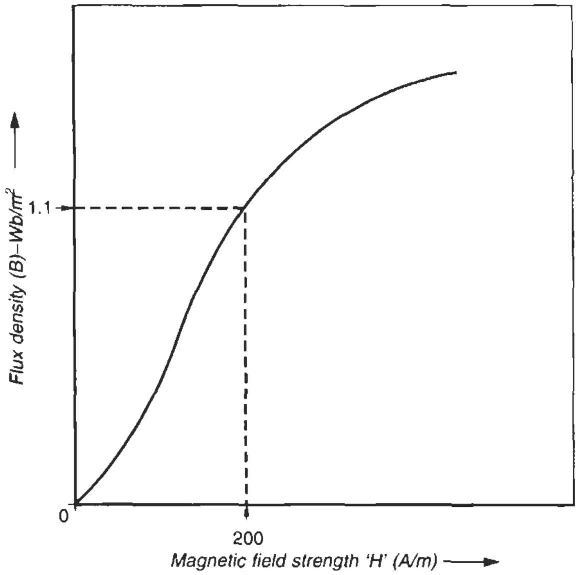

Figure 28.28 A typical magnetic saturation (B–H) curve for CRGO sheets

$$A = \frac{66.84 \times 10^{-3}}{0.9}$$

or 74.27×10^{-3} squre metres

or 74270 mm^2

Assuming the width of the laminates to be 150 mm and the depth of the core as d (Figure 28.27),

$\therefore$ Area of cross-section of the choke = $150 \cdot d = 74270$

$$\text{or } d = \frac{74\,270}{150}$$

$= 495$ (say, 500 mm)

$\therefore\ A = 150 \times 500 = 75\,000$ mm^2 or 0.075 m^2

The size of the opening will depend upon the width and height required by the current-carrying conductors. Say, for six numbers 152.4 mm × 6.35 mm busbars, as shown in Figure 28.27, an opening of 170 mm × 250 mm will be adequate.

To determine the value of μ, the saturation or the B–H curve of the silicon steel being used must be available. Assuming a normal flux density for such a core to be 1.1 wb/m^2 (see also Section 1.9) and making use of a normal B–H curve as shown in Figure 28.28, the corresponding value of H for a value of B as 1.1 wb/m^2 can be read as 200 A/m,

$$\therefore \quad \mu = \frac{B}{H} = \frac{1.1}{200} = 0.0055 \text{ H/m}$$

$$\text{and } \mu_r = \frac{\mu}{\mu_o}$$

$$\therefore \quad \mu_r = \frac{0.0055}{4\pi \times 10^{-7}}$$

$= 4378$ H/m

length of magnetic circuit

$$k = 2(320 + 400) + 2 \cdot l_g$$

$\simeq 2 \times 720$ mm or 1.44 m

$$\text{and } R_1 = \frac{Z_c^2}{L}$$

$$= \frac{1^2}{18.38 \times 10^{-6}} \text{ H}$$

$= 5.44 \times 10^4$ H

$\therefore$ Air gap

$$l_g = \frac{R_1 \cdot \mu_o \cdot \mu_r \cdot A - k}{2(\mu_r - 1)}$$

$$= \frac{5.44 \times 10^4 \times 4\pi \times 10^{-7} \times 4378 \times 0.075 - 1.44}{2(4378 - 1)}$$

$$= \frac{22.44 - 1.44}{2 \times 4377} \text{ M}$$

$\simeq 2.4$ mm.

and weight of the choke

W = Volume × specific gravity

where

Volume = $1440 \times 150 \times 500$ mm^3

Assuming the specific gravity of the laminates to be $\simeq 8.5$ g/cm^3

$$\therefore\ W = \frac{1440 \times 150 \times 500}{1000} \times \frac{8.5}{1000} \text{ kg}$$

$= 918$ kg

28.8.3 Derating due to the proximity effect

We will discuss this aspect in two parts, one for the non-isolated bus systems and the other for the phase-isolated bus systems as in Chapter 31.

Proximity effect on non-isolated bus systems

Drawing inferences from the literature available on the subject (see the further reading at the end of the chapter), based on laboratory tests, practical experience and the field data available, deratings for different configurations are shown in Table 28.7 which should be sufficient to account for the likely proximity effects

Proximity effect on the enclosure

The electric field produced by the current-carrying conductors of each phase also links the metallic bus enclosure, its mounting supports, and structures existing in the vicinity, parallel and around the axis of the current-carrying conductors. It causes induced (parasitic) currents in such structures and leads to the following:

- Resistance losses (I^2R) and
- Magnetic losses.

Magnetic losses will constitute the following:

- Eddy current losses ($\propto B^2$, Section 1.6.2.A-iv) and
- Hysteresis losses ($\propto B^{1.6}$, Section 1.6.2.A-iv)

The electrodynamic forces between the enclosure and the conductors will be small because the enclosure, which is non-continuous, will carry much less current than the main conductors. They therefore need not be considered separately, as the metallic structure will have sufficient strength to bear them.

In a non-magnetic enclosure, such as aluminium or stainless steel, there will be only resistance losses. In a magnetic enclosure, such as mild steel (MS), there will also be hysteresis and eddy current losses in addition to resistance losses. All these losses appear as heat in the enclosure and the metallic structures in the vicinity. At higher currents say, 2000 A and above, this phenomena, particularly with MS enclosures, may assume such large proportions that the enclosure, instead of providing a heat-dissipating surface to the heat generated by the current-carrying conductors inside, may add to their heat. Depending upon the current rating, the configuration of the busbars and the material of the enclosure should be chosen to minimize these effects as far as possible. It is possible to do this by adopting one or more of the following methods. Since the spacing in an HT system is already large, an HT system is generally not affected by the proximity effects. The following discussion therefore relates primarily to an LT system.

Table 28.7 Approximate deratings due to proximity effects for different configurations of bus systems

Current rating	*Centre spacing S*	*Approx. derating*
(1) ***For flat busbar*** 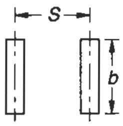		
(I) For LT systems		
1 Smaller ratings up to 1600 A	Normal spacings	5%
2 For 2000–3000 A	(i) $S \geq 4b$ (ii) $S \geq 2b$	5% 15%
3 For larger ratings up to around 6500 A, as required for medium size turbo-alternators, up to 5 MVA used for captive power generation in a process plant, such as a sugar mill, mostly utilizing its own surplus or waste gases/fuel and steam. Also small gas and hydroelectric power-generating stations	$S \geq 4b$	15%
(II) For HT systems 2000–3000 A	Generally $S \geq 4b$	5%
(2) ***For channel sections*** For 2 channels in box form	$S \geq 3a^a$	18%
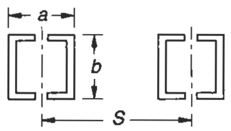	$S \geq 4a^a$	11%
	$S \geq 5a^a$	5%
	$S \geq 6a^a$	1%

[a] In channels in box form $a > b$ as shown in Table 30.9.

28.8.4 Minimizing the proximity effect

1 *Maintaining greater spacing (S) between the phases*

This can be done by providing adequate clearances between the conductors and the inside of the enclosure (say, 300 mm). Table 30.5 and all the other tables in Chapter 30 are based on the fact that the proximity effect is almost negligible at 300 mm from the centre of the Current-carrying conductors. But in thicker sections, or where a number of smaller sections are used together to form a phase, the current will concentrate at the outer surfaces only (skin) rather than the nucleus. Therefore, to achieve an almost zero-proximity effect condition it is desirable to provide a space of 300 mm and more between the extreme outer surfaces, rather than between the centres, as shown in Figure 28.17(b). The condition of $S \geq 4b$ (Table 28.7) will also be almost satisfied by doing so. For still higher currents, this distance must be increased further or a segregated construction adopted (Section 28.2.2). But to keep the phase conductors completely out of the inductive effect of the other phases may require very large enclosures, particularly at higher ratings (above 3200 A or so), which may not be practical.

Below we describe improvised bus systems to limit the reactance and hence the voltage drop and obtain an inductively balanced system to achieve a balanced voltage and equal load sharing by the three phases at the far end. The systems are

- Phase interleaving and
- Phase transposition

2 *Phase interleaving*

This is a highly efficient and more practical method for large ratings and offers a very high metal utilization of the conductors. It provides an almost balanced and a low reactance system. Each phase, consisting of a number of conductors, is split into two or more groups and each group of conductors is then rearranged into three or three and a half phases, according to the system requirement, as illustrated in Figures 28.29(a) and (b). It is, however, suggested, to limit the number of groups to only two for considerations of size and the cost of enclosure. The two groups would meet the design requirements in most cases. Therefore if four or more flats are used per phase it is not always necessary that as many groups be arranged, unless the current rating of the system is too large to effectively reduce the reactance of the entire system. In four conductors, for instance, two groups, each with two conductors per phase, can be arranged as shown in Figure 28.29(b) to achieve a low reactance system as a result of the smaller spacings between the split phases, on the one hand, and two parallel paths, on the other. The two parallel paths will further reduce the total reactance to one half. The field produced by each split phase would now become half ($\phi \propto I$) and fall out of the inductive region of the other. The arrangement would thus provide a system with a low proximity effect.

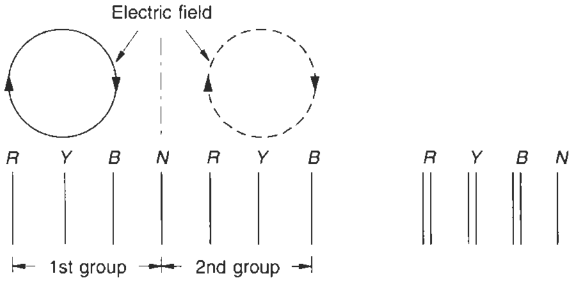

(a) Interleaving of 2 conductors per phase

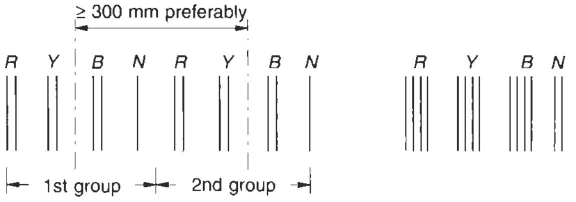

(b) Interleaving of 4 conductors per phase

Figure 28.29 Minimizing the effects of skin and proximity through phase interleaving

Since the conductors in each phase are now arranged as close as dielectrically possible, the electrodynamic forces on each group in the event of a fault on account of the spacing would be high as a result of the smaller spacing between the phase conductors ($F_m \propto 1/S$ equation (28.4)). But the overall forces would become much less compared to the conventional arrangement because of two or more parallel current paths, each carrying a reduced amount of current, depending upon the number of parallel paths so formed. For two parallel paths, for instance, $F_m \propto 2 \cdot (I_{sc}^2/2)$ or $\propto I_{sc}^2/2$. Generalizing, $F_m \propto$, $1/n$ if n is the number of parallel paths. Moreover, the mounting supports will also become stronger than before, because there are as many mounting supports as the number of parallel paths, each sharing the total force equally. The method of interleaving will therefore require no extra reinforcement of the busbar supports or the mounting structures. (See also Example 28.11). As a result of the low reactance obtained the arrangement will provide a somewhat inductively balanced system. The reactance of the conductors can be calculated on an individual group basis and then halved when the conductors are split into two halves, or reduced by the number of parallel paths arranged.

The arrangement will also minimize the skin effect to a very great extent, as the current of each phase is now shared by two or more independent circuits, each of a thinner section than a composite phase. It can be considered an improvised version of arrangement 2 in Figure 28.14. The thinner sections (smaller nucleus) will provide a better and more uniform sharing of current by all the conductors. The current rating may now be determined by multiplying the individual current rating of each split phase by the number of parallel circuits. As the space between the two groups of the same phase will now be large, 300 mm or more, they will have nil or only negligible influence of skin effect among themselves.

For instance, a bus system with 4 × 152.4 × 6.35 mm conductors may be arranged into two groups of two conductors each, according to Figure 28.29(b). Then the improved rating of this system as in Table 30.4 will be

$$= 2 \times 2860$$
$$= 5720 \text{ A}$$

as against

- 4240 A for all conductors put together as in Figure 28.33(a) or
- 1.18 × 4240, i.e. 5003 A when arranged as in arrangement 2 of Figure 28.14.

Thus, in phase interleaving, there will be better utilization of conductor capacity by 5720/5003 or >14% over arrangement 2 in Figure 28.14.

Example 28.11

Consider Example 28.7 again, using four sections of 101.6 × 6.35 mm Al conductors, now interleaved as shown in Figure 28.30. To determine the improved reactance and resistance of this arrangement we can proceed as follows.

Proximity effect:

a = 19.05 mm
S = 94.05 mm

$$\frac{a}{b} = \frac{19.05}{101.6} = 0.1875$$

and space factor, $$1.26 \times \frac{S}{a+b} = \frac{1.26 \times 94.05}{19.05 + 101.6}$$
$$= 0.98$$

X_a from graph of Figure 28.24 = 90 $\mu\Omega$/m

and for two parallel circuits = 90/2

$$= 45\ \mu\Omega/\text{m or } 0.045\ \Omega/1000 \text{ m}$$

as against 125 $\mu\Omega$/m with the conventional arrangement calculated in Example 28.9.

Skin effect

Area of cross-section per split phase = 2 × 101.6 × 6.35

$$= 12.9 \text{ cm}^2$$

$$\frac{b}{a} = \frac{101.6}{19.05} = 5.33.$$

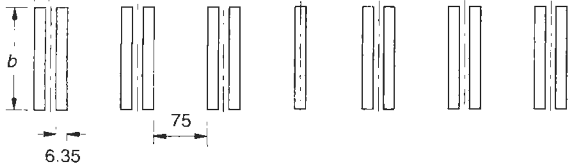

a = 19.05 mm
b = 101.60 mm
S = 94.05 mm
(Depending upon the current rating, it would be advisable to keep it minimum 300 mm, by increasing the gap between the split phases.)

Figure 28.30 Illustrating Example 28.11

$\therefore \frac{R_{ac}}{R_{dc}}$ from the graph in Figure 28.13 (a) by interpolation for an EIE-M grade of aluminium ≃ 1.13

$$R_{dc} = 0.056\ \Omega/1000 \text{ m per conductor}$$
$$= 0.056/4\ \Omega/1000 \text{ m for 4 conductors}$$

$$\therefore R_{ac} = 1.13 \times \frac{0.056}{4}$$
$$= 0.0158\ \Omega/1000 \text{ m}$$

$$\therefore \text{Impedance } Z = \sqrt{0.0158^2 + 0.045^2}$$
$$= 0.0477\ \Omega/1000 \text{ m}$$

Voltage drop

Accordingly the revised voltage drop for 40 m of bus length

$$= 2000 \times 0.0477 \times \frac{40}{1000}$$
$$= 3.82 \text{ V}$$

which is even less than 1% for a 415 V bus system.

Electrodynamic forces

For a system fault level of 50 kA maximum forces on each group,

$$F_m = K \cdot \frac{16 \cdot I_{sc}^2}{S} \times 10^{-4} \text{ N/m}$$

(i) For a conventional arrangement (Figure 28.17(a))

K for a space factor of $\frac{S-a}{a+b} = \frac{184{\cdot}45 - 44.45}{44.45 + 101.6}$ i.e. 0.958

corresponding to $\frac{a}{b}$ or $\frac{44.45}{101.6}$ i.e. 0.4375

from the graph in Figure 28.7 by interpolation K ≃ 0.96

$$\therefore \quad F_m = \frac{0.96 \times 16 \times 50\,000^2}{184.45} \times 10^{-4}$$
$$= 20\,819 \text{ N/m}$$

(ii) For the improvised interleaving arrangement in Figure 28.30:

K for a space factor of $\frac{94.05 - 19.05}{19.05 + 101.6}$ i.e. 0.62 from the graph in Figure 28.7 corresponding to

$\frac{a}{b}$ of $\frac{19.05}{101.6}$ i.e. 0.1875 ≃ 0.87

$\therefore$ F_m on each set of supports

$$= \frac{0.87 \times 16 \times \left(\frac{50\,000}{2}\right)^2}{94.05} \times 10^{-4}$$
$$= 9250.4 \text{ N/m}$$

$$\therefore \quad F_m \text{ on both supports} = 2 \times 9250.4$$
$$= 18\,500.8 \text{ N/m.}$$

This is less than the force developed with the conventional arrangement in Figure 28.17(a).

3 *Phase transposition*

In this arrangement the three-phase conductors are evenly transposed in a length of busbars by interchanging their physical location so that each phase is under an equally inductive effect produced by the other two phases. The arrangement is illustrated in Figure 28.31 This can be performed by arranging a straight length of a bus into three equal sections (or in multiples of three), as shown. If x is the reactance of phases R and B, and y that of phase Y in the first section, then phases B and Y will have reactance x and R a reactance y in the second section. In the third section, phases Y and R will have a reactance of x each and phase B will have a reactance y. Hence, the reactance of each phase, at the end of the three lengths, will be balanced at $(2x + y)$, causing equal load sharing and an equal voltage drop in all three phases. This arrangement would thus make the system almost balanced inductively by each phase having equal exposure to the inductive fields produced by the other two phases. Due to inductive balancing, the transposition equalizes the reactances in each phase and improves the current sharing by all the three phases, besides an equal voltage drop through the length of the bus.

However, there may not be an appreciable improvement in the proximity effect between each section, unless the transpositions are increased infinitely, as in the case of a stranded three-phase cable which has continuously twisted conductors and represents an ideal transposition. In addition, there is no change in the skin effect. This arrangement therefore has the purpose primarily of achieving an inductively balanced system and hence a balanced sharing of load and equal phase voltages at the far end.

It is also cumbersome to arrange a bus system with phase transposition. This technique has therefore not found many applications in a bus system. It is more useful in dealing with inductive interference in communication lines (Section 23.5.2(C)).

4 *Changing the configuration of busbars*

By arranging the busbars into a few more configurations along the lines discussed above it is possible to reduce the proximity effect to a great extent. Some of these configurations are illustrated in Figure 28.14. See also Example 28.12, illustrating the marked improvement in the capacity utilization of the busbars by using different configurations.

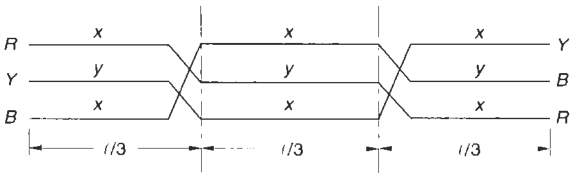

$X_R = 2x + y$
$X_Y = 2x + y$
$X_B = 2x + y$

Where X_R, X_Y and X_B are the reactances of each phase.

Figure 28.31 Balancing of reactances through phase transposition

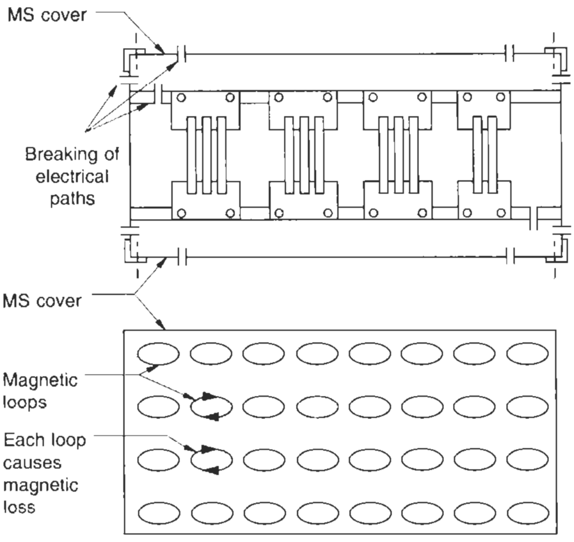

(a) Breaking of electrical paths do not diminish the magnetic field

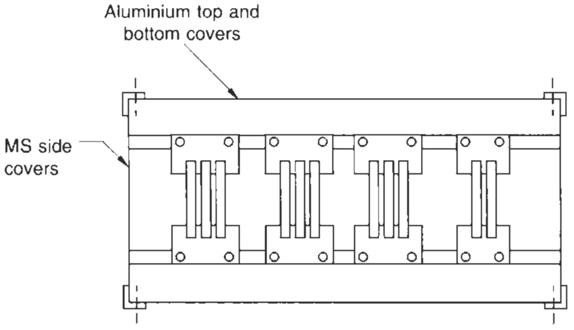

(b) An economical and low loss enclosure

Figure 28.32 Magnetic field in a magnetic material

5 *Busbar enclosure*

- Non-magnetic enclosure. The proximity effect can also be minimized by using a non-magnetic enclosure of aluminium or stainless steel. In magnetic materials the field in the enclosure is produced in the form of small magnetic loops. Its effect cannot be mitigated by breaking the electrical path alone, as illustrated in Figure 28.32. Its effect can be diminished only by replacing a few parts of the magnetic enclosure itself, such as its top or bottom covers or both, with a non-magnetic material. It is possible to achieve an economical and low-loss enclosure by replacing only its top and bottom covers with a non-magnetic material. The covers constitute the larger part of the surface area of the enclosure.
- By providing adequate louvres in the enclosure as shown in Figure 28.33(b) or by using a forced-air draught through the length of the enclosure.

28.9 Sample calculations for designing a 2500 A non-isolated phase aluminium busbar system

Example 28.12
Design parameters

Supply system three-phase four-wire 415 V ± 10%,	50 Hz ± 3%
Fault level	45 kA
Duration of fault	1 second
Continuous current rating	2500 A
Ambient temperature	50°C
Maximum permissible operating temperature	85°C
Permissible final temperature at the end of the fault	185°C

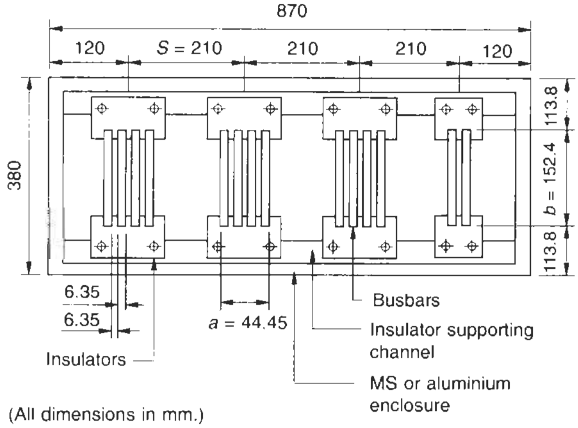

Figure 28.33(a) Busbar arrangement and enclosure size for bus duct of Example 28.12

(A) Rectangular sections

(i) Minimum size of busbars for short-circuit conditions
The minimum size of busbars for an operating temperature of 85°C and a final temperature of 185°C can be ascertained from the curves of Figure 28.5, suggesting

$$\frac{I}{A} \cdot \sqrt{t} = 0.0799$$

or $A = \frac{45}{0.0799} \cdot \sqrt{1}$

$= 563.2$ sq. mm.

Maximum temperature rise of the busbars at the rated current

$= 85 - 50$

$= 35°C$

Assume the temperature of the busbars at the time of fault = 85°C and rectangular flats of electrolytic grade E-91E or its equivalent. Busbars chosen for each phase – four (152.4 mm × 6.35 mm) – which are more than the minimum size required to account for the thermal effects during a short circuit condition

for neutral – two (52.4 mm × 6.35 mm)

Size of busbar enclosure – 870 mm × 380 mm (Figure 28.33(b)).

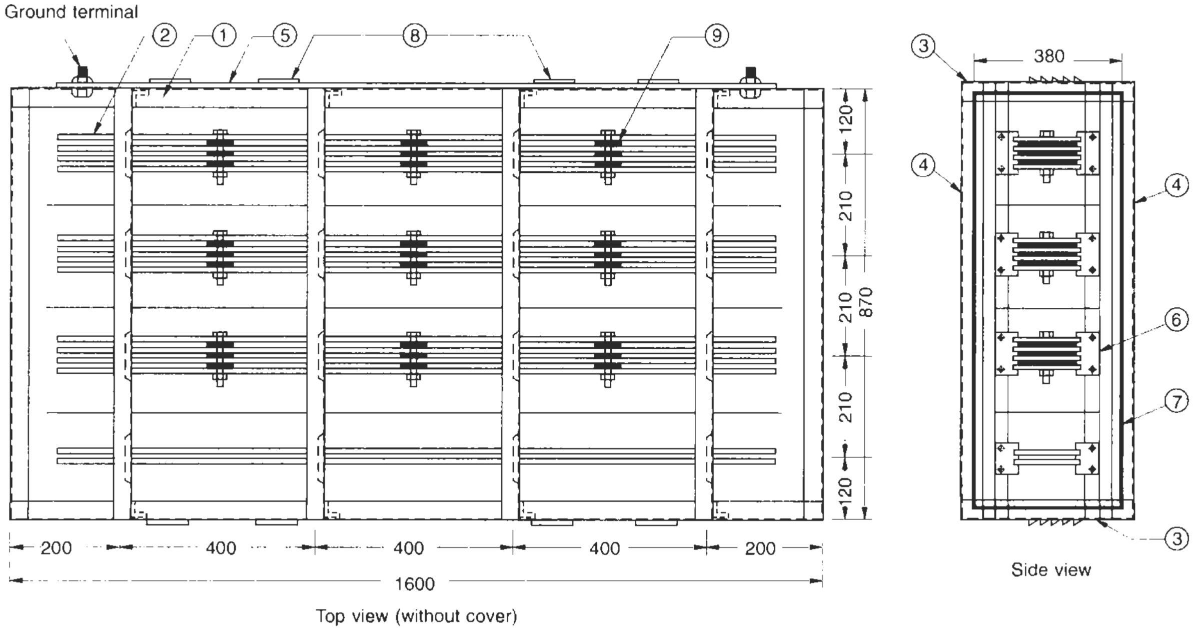

Legend
1. M.S. angle
2. Al. bus 4 × 152.4 × 6.35 mm
3. Side frames 2 mm M.S. or 3 mm Al.
4. Bottom and top covers 2 mm M.S. or 3 mm Al.
5. Ground bus 50 × 6 mm
6. Insulators
7. Gasket
8. Louvres
9. Metallic spacers

Figure 28.33(b) General arrangement of a typical running section of the busduct of Figure 28.33(a)

Material of enclosure – aluminium
Busbar configuration – as Figure 28.33a
Busbar support made of SMC or DMC (Section 13.6.1).
Distance between two busbar supports: 400 mm (Figure 28.33(b))

(ii) Data available
Aluminium busbars, from Tables 30.4 and 30.6
Electrical conductivity = 1
Minimum tensile strength = 2050 kgf/cm^2 (Table 30.1)
Minimum cross-breaking or yield strength = 1650 kgf/cm^2 (Table 30.1)
Busbar supports: from Table 13.14

Mechanical properties	*DMC in kgf/cm^2*	*SMC in kgf/cm^2*
Minimum tensile or shearing strength	250–500	500–900
Minimum compressive strength	1200–1800	1600–2000
Minimum cross-breaking or flexural strength (bending strength)	700–1200	1400–1800

Hardware

Mechanical properties	*High tensile (HT) fasteners as in ISO 4014 and ISO 898, grade 8.8*	*Ordinary MS (mild steel) fasteners as in ISO 4016, grade 4.6*
Minimum tensile strength	8000 kgf/cm^2	4000 kgf/cm^2
Minimum cross-breaking or yield strength	4400 kgf/cm^2	2200 kgf/cm^2

(iii) Deriving the actual current rating
Applicable deratings:

- Due to higher ambient temperature
  For 50°C as in Table 28.3 and Figure 28.10 = 0.815
- Due to altitude
  Nil, since the installation of the equipment is assumed to be within 2000 m above the mean sea level
- Due to grade of busbars
  For E-91E or its equivalent, as in Table 30.6 = 1.0
- Due to size of enclosure and environmental conditions of location
  The Enclosure is of non-magnetic material, therefore it will be devoid of hysteresis and eddy current losses.
  Heat dissipation factor

$$= \frac{\text{Cross-sectional area of active aluminium}}{\text{Area of enclosure}}$$

$$\text{i.e. } \frac{(3 \times 4 \times 152.4 \times 6.35) + (2 \times 152.4 \times 6.35)}{380 \times 870}$$

$$= \frac{14 \times 152.4 \times 6.35}{380 \times 870}$$

$$= 0.041$$

or 4%

As in Table 28.6, by simple interpolation, for condition of location against serial number 2, derating = 0.77

- Due to skin effect
  Nil, as it is already considered in Tables 30.2, 30.4 and 30.5, while establishing the basic ratings of the busbars.
- Due to proximity effect
  Approximately 20%, since $S < 2b$. It is recommended to have the centre spacing S at least 2 × 152.4, i.e. 305 mm. If the width of the enclosure poses a limitation, a more appropriate configuration such as in Figure 28.34 or the technique of interleaving as in Figure 28.35 may be adopted to achieve better utilization of the active metal. In our calculations we have considered all these alternatives.
- Due to voltage variation
  We have already discussed the impact of voltage variation on an industrial drive in Section 1.6.2(A-iii). The impact of this on a bus system may not be the same. A bus may have to supply lighting, heating and other resistive or inductive loads. All such loads except electric motors will perform low at lower voltages and hence draw a lower current. Generally, we can assume that the loading on a bus, as enhanced by the industrial drives, will be almost offset by the decrease of loading by the other loads if we assume industrial drives to be up to 50% of the total connected load. Usually therefore no derating will be necessary for a lower voltage, except for large installations where the drives may constitute the bulk of the load. Consideration of voltage variation will therefore depend upon the type of installation. In our calculations, however, we are ignoring the impact of this.
- Frequency variation
  At higher frequencies up to 3% skin and proximity effects would be slightly higher, but can be ignored as their impact will be only marginal.

Considering all these deratings the total derating for the configuration of Figure 28.33(a) or (b) will be

$$= 0.815 \times 1 \times 1 \times 0.77 \times 0.8$$

$$= 0.50$$

Basic current rating of 4 × 152.4 mm × 6.35 mm aluminium busbars per phase as in Table 30.4

$$= 4240 \text{ A}$$

$\therefore$ Effective rating after considering all possible deratings

$$= 4240 \times 0.5$$

$$= 2120 \text{ A}$$

These sections of busbars are not adequate for the required current rating of 2500 A. The rating of the bus system can, however, be improved by almost 20% and make it suitable for the required rating by providing the busbars and the inside of the enclosure with a non-metallic, matt finish black paint. If voltage variation is also to be considered, then this bus may not be suitable for the required duty even after painting.

(iv) Voltage drop

- R_{dc} for E-91E grade of conductor, from Table 30.7

$$= 32.38 \ \mu\Omega/\text{m per conductor at } 20^\circ\text{C}$$

$\therefore R_{dc}$ at an operating temperature of 85°C

$$= R_{dc20} \, [1 + \alpha_{20} \, (\theta_2 - \theta_1)]$$

$$= 32.38 \, [1 + 0.00363 \, (85 - 20)]$$

$$= 32.38 \, (1 + 0.236)$$

or $R_{dc} = 40.02 \ \mu\Omega/\text{m}$ per conductor and

for the phase $= \frac{40.02}{4}$ or $10.005 \times 10^{-3} \ \Omega/1000 \text{ m}$

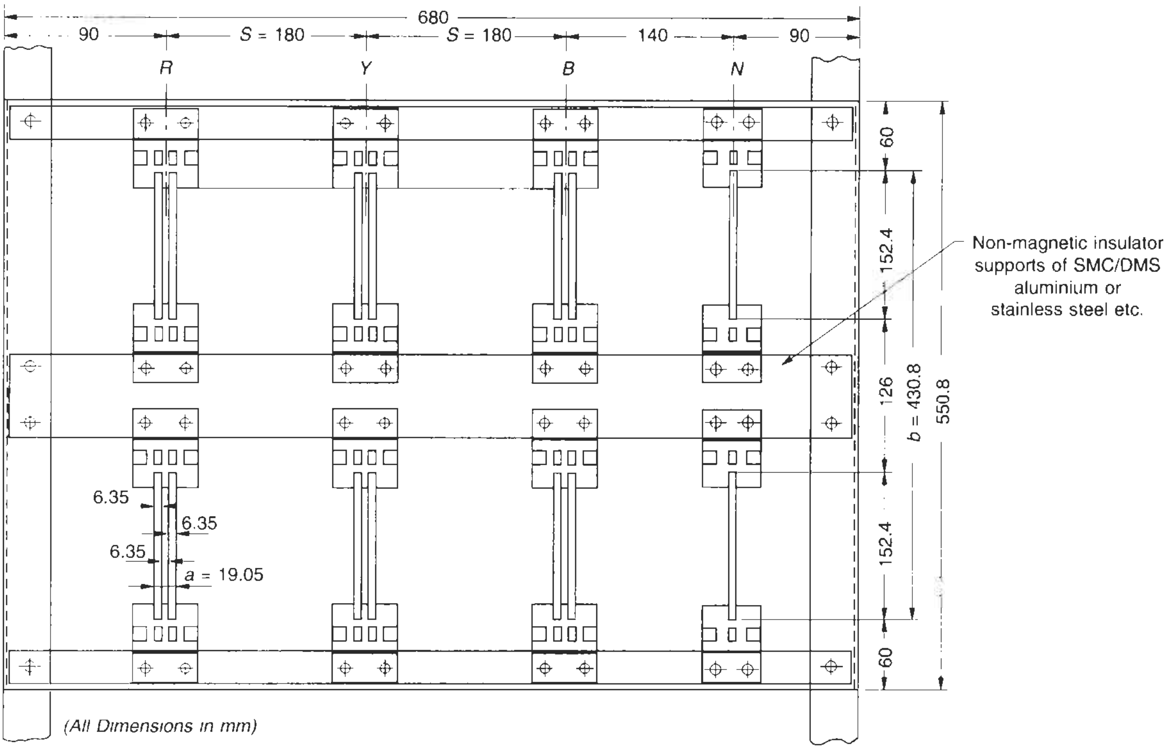

Figure 28.34 Illustration of Example 28.12

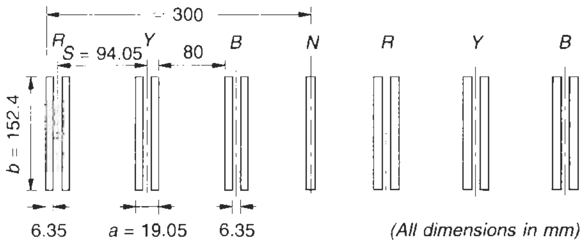

Figure 28.35 For Example 28.12

- Area of cross-section per phase = 4 × 152.4 × 6.35 mm^2
  = 38.71 cm^2

  For this area of cross-section, the skin effect ratio R_{ac}/R_{dc} from Figure 28.13(a) for aluminium grade E-91E at 85°C, having b/a = 152.4/44.45 ≃ 3.43 measures almost 1.425 by approximating the interpolation,

  $\therefore\ R_{ac}/R_{dc} = 1.425$

  i.e. an increase of almost 42.5%, due to the skin effect alone.

  $\therefore\ R_{ac} = 10.005 \times 10^{-3} \times 1.425$

  $= 14.257 \times 10^{-3}\ \Omega/1000$ m per phase

- Proximity effect

  Measure reactance X_a from Figure 28.24 for

  $$1.26 \times \frac{S}{a+b} = 1.26 \times \frac{210}{44.45 + 152.4}$$

  i.e. 1.344, as in the curve, corresponding to a/b, as $\frac{44.45}{152.4}$ i.e. 0.29,

  X_a = 110 $\mu\Omega$/m per phase or 110 × 10^{-3} Ω/1000 m per phase.

- Impedance,

  $$Z = \sqrt{14.257^2 + 110^2} \times 10^{-3}$$

  $= 0.111\ \Omega/1000$ m per phase

- For a 50 m length of bus duct this impedance will cause a voltage drop of

  $$2500 \times 0.111 \times \frac{50}{1000} = 13.9 \text{ V}$$

  which is 3.3% of the rated voltage and is therefore acceptable. For higher bus lengths, however, which may be rare, while the current rating of the system selected will be suitable the voltage drop may exceed the recommended limits. In this case it will be advisable to adopt the alternative configuration of Figure 28.34 or the technique of interleaving (Figure 28.35). A comparison is drawn for these configurations as in Table 28.8, which reveals that both alternatives significantly improve the performance of the same bus section.

(v) Effect of proximity on the centre phase Y

For a length of 50 m the voltage drop in phase Y, due to R_{ac}, and assuming the content of $X_a \simeq 0$

$$= 2500 \times 14.257 \times 10^{-3} \times \frac{50}{1000}$$

= 1.78 V

∴ Receiving side voltage of phases R and B

$$= \frac{415}{\sqrt{3}} - 13.9$$

$$= 225.7 \text{ V}$$

and of phase $Y = \frac{415}{\sqrt{3}} - 1.78$

$$= 237.8 \text{ V}$$

The imbalance for this length and rating of bus system is not substantial, yet if we assume that a balanced supply source is desirable, then we must make up the lost inductance in phase Y by inserting a reactor into this phase, as discussed in Section 28.8.2 of an equal value of X_a, i.e.

$$X_a = 110 \times 10^{-3} \times \frac{50}{1000} = 0.0055\ \Omega$$

(vi) Calculation for short-circuit effects

Electrodynamic forces

These can be determined from equation (28.4),

$$F_m = \frac{16 \cdot I_{sc}^2 \cdot K \cdot 10^{-4}}{S} \text{ N/m}$$

where

I_{sc} = r.m.s. value of fault current in Amperes = 45 000 A

K = space factor for rectangular conductors, determined from the curves of Figure 28.7, corresponding to

$$\frac{S-a}{a+b} \text{ i.e. } \frac{210 - 44.45}{44.45 + 152.4}$$

or 0.84

corresponding to the curve for a/b = 44.45/152.4 or 0.29

Assuming the curve for a/b = 0.25 with little error, K = 0.93

As in Figure 28.33(a)

S = centre spacing between two phases = 210 mm

a = space occupied by the conductors of one phase = 44.45 mm

b = width of the busbars = 152.4 mm

$$\therefore \quad F_m = \frac{16 \times (45\,000)^2 \times 0.93}{210} \times 10^{-4} \text{ N/m}$$

$$\simeq 14\,348.6 \text{ N/m}$$

$$\because \quad 1 \text{ N/m} = \frac{1}{9.807} \text{ kgf/m}$$

$$\therefore \quad F_m \simeq 1463.1 \text{ kgf/m}$$

Since the busbar supports are assumed to be at a distance of 400 mm,

∴ force on each section of busbars, insulators and the mounting fasteners

$$= 1463.1 \times 0.4$$

$$= 585.24 \text{ kg}$$

We have drawn a comparison of these forces for the other busbar configurations in Table 28.8 for more clarity.

Since Figure 28.34 is found to be a better arrangement, we have considered forces as in this arrangement only in all our subsequent calculations.

(vii) Mechanical suitability of busbars and their supporting system

Below we analyse the adequacy and the suitability of busbars, fasteners and the insulators supporting the busbars, to withstand the above forces acting differently at different locations.

Bending stresses on the busbars

$$\text{Bending stress at section } x - x = \frac{F_m \cdot l}{12 \cdot M \cdot N} = \text{kg/cm}^2 \tag{28.10}$$

where

F_m = maximum electrodynamic forces acting on each support, in the event of a fault, as calculated above = 514 kgf

l = centre distance between two busbar supports = 40 cm

M = sectional modulus of each busbar at section $x - x$

$$= \frac{1}{6} a \cdot b^2 \text{ in cm}^3$$

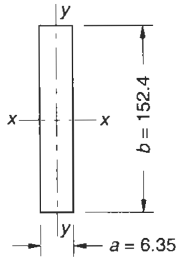

where for a 152.4 mm × 6.35 mm busbar section

a = 6.35 mm

b = 152.4 mm

$$\therefore \quad M = \frac{1}{6} \times \frac{6.35 \times 152.4^2}{1000} \text{ cm}^3$$

$$= 24.58 \text{ cm}^3 \text{ (as indicated in Table 30.7)}$$

N = number of busbars per phase = 4

$$\therefore \text{ Bending stress } = \frac{514 \times 40}{12 \times 24.58 \times 4} \text{ kg/cm}^2$$

$$\simeq 17.43 \text{ kg/cm}^2$$

To calculate the sectional modulus (or moment of resistance) of the four bus sections in parallel we have multiplied the sectional modulus of one bus by 4. This is a simple method when the busbars of each phase are in the same plane and equally spaced as in Figure 28.33(a) with no additional spacers between them to hold them together.

But when other configurations are adopted as shown in Figure 28.34, this concept may not hold true. In other configurations, however, the sectional modulus will only rise and reduce the bending stress on the busbars.

The method adopted to calculate the sectional modulus is therefore simple and on the safe side. However, to calculate the sectional modulus more accurately or to derive it for any other section of the support than considered here reference may be made to a textbook on the strength of materials or a machine handbook.

Note

The sectional modulus, when required, can be increased by providing spacers between the straight lengths of bus sections, as shown in Figure 28.33(b). The spacers, when provided, can make them more rigid and add to their bending strength due to higher sectional modulus. At joints these spacers occur automatically in the form of overlapping of busbars or fishplates (Figures 29.4 and 29.5). The spacers prevent the bus lengths from being deflected towards each other.

Table 28.8 Calculation of electrodynamic forces

Description	*Arrangement as in Figure 28.33(a)*	*Arrangement as in Figure 28.34*	*Interleaving as in Figure 28.35*
Basic current rating without derating	4240 A	4240 × 1.57 = 6657 A	2 × 2860 (2860 A is the rating of one split phase Table 30.4) = 5720 A
Effective current rating considering approximately the same deratings	0.5 × 4240 = 2120 A	0.5 × 6657 = 3328 A[a]	0.5 × 5720 = 2860 A[a]
Proximity effect			**On per split phase basis**
$\frac{a}{b}$	$\frac{44.45}{152.4} = 0.29$	$\frac{19.05}{430.8} = 0.044$	$\frac{19.05}{152.4} = 0.125$
$1.26\,\frac{S}{a+b}$	$\frac{1.26 \times 210}{44.45 + 152.4} = 1.344$	$\frac{1.26 \times 180}{19.05 + 430.8} = 0.504$	$\frac{1.26 \times 99.05}{19.05 + 152.4} = 0.73$
Approx. X_a from Figure 28.24	110 $\mu\Omega$/m	64 $\mu\Omega$/m	74 $\mu\Omega$/m per circuit. Since there are two parallel circuits, ∴ Combined $X_a = 37\ \mu\Omega$/m
Skin effect			
Area of cross-section	4 × 152.4 × 6.35 = 38.71 cm^2	4 × 152.4 × 6.35 = 38.71 cm^2	2 × 152.4 × 6.35 = 19.35 cm^2
$\frac{b}{a}$	$\frac{152.4}{44.45} \simeq 3.43$	$\frac{430.8}{19.05} = 22.6$	$\frac{152.4}{19.05} = 8$
Approx. $\frac{R_{ac}}{R_{dc}}$ from Figure 28.13(a)	1.425	1.3	1.18
R_{dc} as calculated in step iv	40.02 $\mu\Omega$/m per conductor	40.02 $\mu\Omega$/m per conductor	40.02 $\mu\Omega$/m per conductor
∴ R_{ac}	$= \frac{1.425 \times 40.02}{4}$ = 14.257 $\mu\Omega$/m	$= \frac{1.3 \times 40.02}{4}$ = 13.01 $\mu\Omega$/m	$= \frac{1.18 \times 40.02}{4}$ = 11.81 $\mu\Omega$/m
Impedance Z	$\sqrt{110^2 + 14.257^2}$ = 111 $\mu\Omega$/m	$\sqrt{64^2 + 13.01^2}$ = 65.31 $\mu\Omega$/m	$\sqrt{37^2 + 11.81^2}$ = 38.84 $\mu\Omega$/m
Voltage drop	$2500 \times 50 \times 111 \times 10^{-6}$ $= \frac{13.9}{4.5} \times 100$	$2500 \times 50 \times 65.31 \times 10^{-6}$ = 8.16 V	$2500 \times 50 \times 38.84 \times 10^{-6}$ = 4.85 V
as % of system voltage	$\frac{13.9}{4.5} \times 100 \simeq 3.3\%$	$\frac{8.16}{415} \times 100 = < 2\%$	$\frac{4.85}{415} \times 100 \simeq 1.1\%$
Electrodynamic forces			
$\frac{S-a}{a+b}$	$\frac{210 - 44.45}{44.45 + 152.4} = 0.84$	$\frac{180 - 19.05}{19.05 + 430.8} \simeq 0.358$	$\frac{99.05 - 19.05}{19.05 + 152.4} = 0.47$
$\frac{a}{b}$	$\frac{44.45}{152.4} = 0.29$	$\frac{19.05}{430.8} = 0.044$	$\frac{19.05}{152.4} = 0.125$
K from Figure 28.7	0.93	0.7 (considering curve for $a/b = 0.1$)	0.77 (for $a/b = 0.125$ by interpolation)
F_m in N/m	$\frac{16 \times (45\,000)^2 \times 0.93}{210} \times 10^{-4}$ = 14,348.6	$\frac{16 \times {}^{b}(45\,000)^2 \times 0.7}{180} \times 10^{-4}$ = 12 600	$\frac{16 \times 2 \times \left(\frac{45\,000)}{2}\right)^2 \times 0.77}{99.05} \times 10^{-4}$ = 12593.64
In kgf/m	1463.1	1285	1284
Forces on each set of busbar insulators and mounting fasteners, when 400 mm apart	= 1463.1 × 0.4 = 585.24 kgf	= 1282 × 0.4 = 514 kgf	= 1284 × 0.4 = 513.6 kgf

[a] These arrangements of bus systems are suitable for higher load demands also at –10% voltage if it is an industrial installation where most of the loads are industrial drives.

[b] We have considered each phase composed of four bus sections to calculate F_m, to be on the safe side. In fact the current of each phase is split into two circuits in this arrangement similar to the arrangement of interleaving and hence the actual F_m will also be only half that considered above.

Inference

The minimum shearing strength of aluminium is 1650 kg/cm^2 (Table 30.1) which is much larger than the actual force to which the busbars will be subject, in the event of a fault. They are thus more than adequate in cross-section and numbers. Other than bending stress, there is no significant tensile or shearing force acting on the busbars.

Suitability of fasteners

On fasteners also, other than cross-breaking or shearing stress, there is no significant compressive or bending force.

Fasteners for busbar supports

As in Figure 28.34, each phase of four aluminium sections is supported on four two-way insulators. Each insulator is mounted on 2 × M8 size of bolts (diameter of bolt shank, 8 mm).

$\therefore$ Total number of bolts = 4 × 2 = 8 numbers of size M8

But it is possible that the first peak of the force, F_m, may act either downwards or upwards. In which case only four fasteners would be sharing the force at a time. Stress area of four bolts

$$= 4 \times \frac{\pi}{4} \times 8^2 \text{ sq.mm}$$

$$= 2.01 \text{ cm}^2$$

Cross-breaking strength of

(i) Ordinary MS fasteners as in ISO 4016 of grade 4.6,

$$= 2200 \text{ kg/cm}^2 \text{ (minimum)}$$

$\therefore$ Total force they can withstand considering a factor of safety as 100%

$$= \frac{2.01 \times 2200}{2} = 2211 \text{ kg}$$

(ii) High tensile fasteners as in ISO 4014 and ISO 898 of grade 8.8,

$$= 4400 \text{ kg/cm}^2 \text{ (minimum)}$$

$\therefore$ Total force they can withstand

$$\frac{2.01 \times 4400}{2} = 4422 \text{ kg}$$

In this particular instance, due to the large number of fasteners, even an ordinary type of MS fastener will be suitable.

Notes

1 The above situation may not always be true particularly when the current rating is low, say up to 600 A and the system fault level is still high. In this case much less cross-section of aluminium would be used, and the number of supports and fasteners would also be less. Then the fasteners will also be of smaller cross-sections. In such cases the suitability of fasteners will be more relevant.

2 For busbar joints, however, use of high tensile fasteners alone is recommended with a view to ensure adequate contact pressure per unit area, as discussed in Section 29.2 and noted in Table 29.1 which an ordinary fastener may not be able to maintain over long periods.

Fasteners for busbar joints

For busbar joints we have considered 8 Numbers bolts of size M-10 (diameter of bolt shank, 10 mm), as in Figure 29.4. As the size of these fasteners is greater than that of the busbar supports, their suitability is not determined separately.

Suitability of insulators

The busbar support is the most vulnerable component in a current-carrying system. It has to withstand all kinds of stresses developed by the busbars on a fault. From Figure 28.36 we have identified the following likely vulnerable locations in a support that may yield on the occurrence of a fault;

- Finger between the two busbars, section *a–a*, which may shear off from its roots.
- At the bolt mounting holes section *y–y*.
- At the wedges marked with hatching.

But the insulator is more vulnerable at *a–a*, than at the wedges, since the shear area at *a–a* is only 0.6 × 1.5 cm^2 compared to 1.98 × 1.5 cm^2 at the wedges. Hence, for brevity, we analyse possibilities (i) and (ii) only.

In Table 28.9 we have evaluated the cross-breaking, shearing and bending (flexural) stresses, that may act at such locations, to establish the suitability of the supports used.

Note

For more clarity on the subject, in the light of note 1 above we have also worked out the earlier Example 28.6, for short-circuit conditions and then analysed the above details for this arrangement. Assuming

$$I_{sc} = 45 \text{ kA}$$

$$S = 100 \text{ mm (Figure 28.16)}$$

and $K = 0.9$ from graph of Figure 28.7 for

$$\frac{S - a}{a + b} = \frac{100 - 6.35}{6.35 + 101.6}$$

$$\simeq 0.87$$

and $a/b = 6.35/101.6$ i.e. 0.0625

Choosing the curve for $a/b = 0.1$. A slight interpolation in this curve will determine K as 0.9 for a/b as 0.0625

$$\therefore \; F_m = \frac{16 \times (45\,000)^2 \times 0.9}{100} \times 10^{-4} \text{ N/m}$$

$$= 29\,160 \text{ N/m}$$

or 2973.4 kg/m

Assuming the distance between each busbar support of the same phase to be 400 mm then the force on each section of busbars, insulators and the fasteners.

$$= 2973.4 \times 0.4 \text{ kg}$$

$$= 1189.36 \text{ kg}$$

Suitability of busbars; for the given parameters:

$$F_m = 1189.36 \text{ kg}$$

$$\ell = 40 \text{ cm}$$

$$M = \frac{1}{6} \times \frac{6.35 \times 101.6^2}{1000} \text{ cm}^3$$

$$\simeq 10.925 \text{ cm}^3 \text{ and}$$

$$N = 1$$

$$\therefore \text{ Bending stress} = \frac{1189.36 \times 40}{12 \times 10.925 \times 1}$$

$$= 362.89 \text{ kg/cm}^2$$

which is much less than the cross-breaking strength of aluminium.

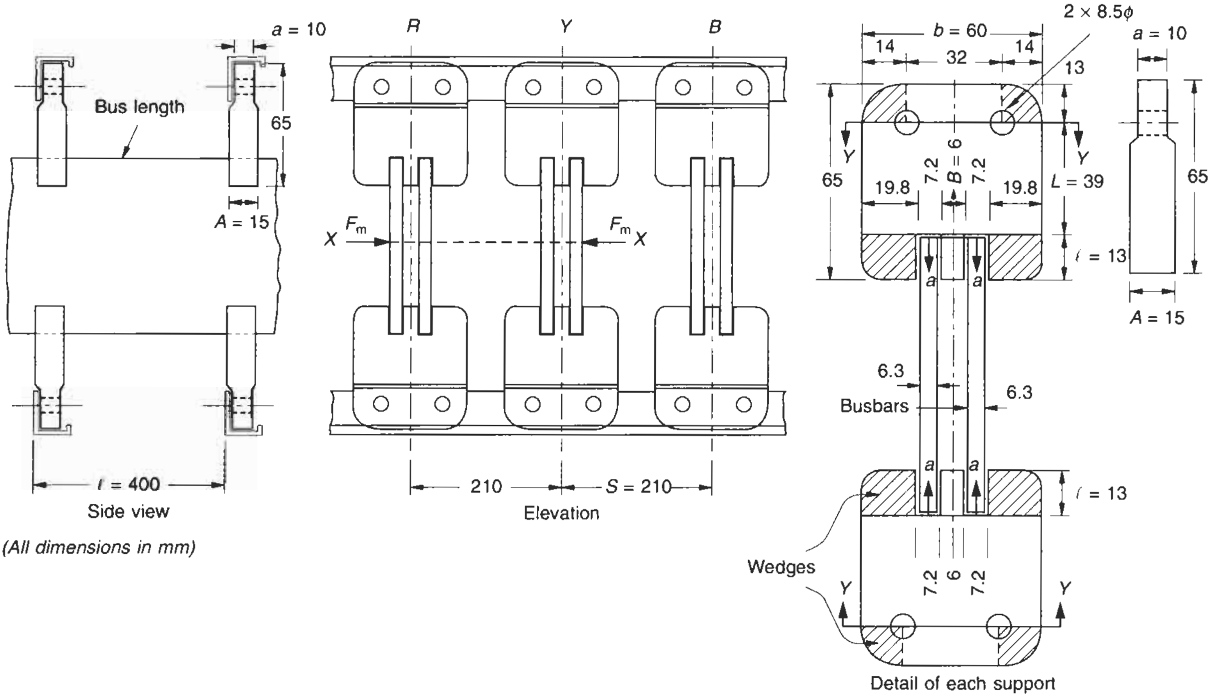

(All dimensions in mm)

Figure 28.36 Mounting arrangement of busbars for Example 28.12

Suitability of fasteners

As in Figure 28.36, although each phase will be supported on two insulators and each insulator mounted on 2 × M8 size of fasteners, it is possible that at the instant of fault, the forces are acting either upwards or downwards. Therefore, assuming forces to be acting only on two fasteners, at the instant of fault and assuming a factor of safety as 100%,

Cross-breaking strength of these fasteners

$$= \frac{1}{2} \times 2 \times \frac{\pi}{4} \times \frac{8^2}{100} \times 2200\,\text{kg (for ordinary MS fasteners)}$$

$$= 1105.28\ \text{kg}$$

which is marginal compared to F_m of 1189.36 kg.
It is advisable to make use of high tensile fasteners only.

Suitability of insulators

We give in Table 28.9 a comparison of different types of forces that the insulators may have to encounter during a fault condition at different locations.

(B) Channel sections

Consider channels in a box form for the same requirements and operating conditions as for rectangular sections.

Choose two channels for the phases and one for the neutral of size 127 mm as in Table 30.9 and let them be arranged as shown in Figure 28.38.

- Electrical conductivity for grade E-91E = 1.0
- Derating for an ambient of 50°C = 0.815

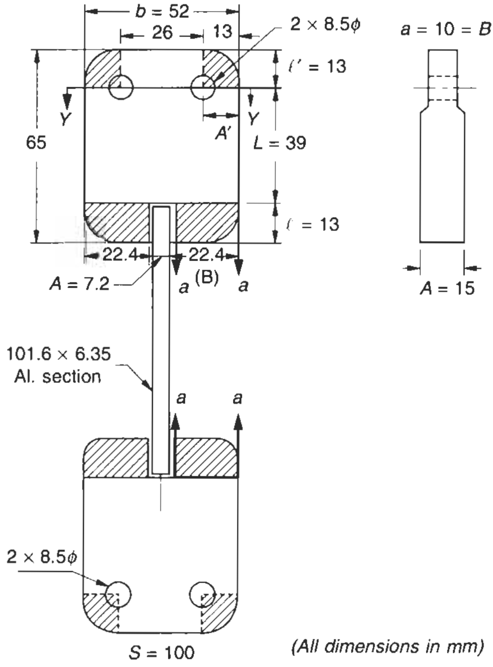

(All dimensions in mm)

Figure 28.37 Mounting arrangement of busbars for Example 28.6

Table 28.9 Checking suitability of insulators

	Example 28.12 *Figures 28.34 and 28.36*	*Example 28.6* *Figures 28.16* and *28.37*
1 Cross-breaking stress X_b at section $a - a$	$F_m = 514$ kgf/cm^2	$F_m = 1189.36$
$X_b = \frac{1.5 F_m \cdot l}{A \cdot B^2}$	$l = 1.3$ cm	$L = 1.3$ cm
	$A = 1.5$ cm	$A = 1.5$ cm
	$B = 0.6$ cm	$B = 2.24$ cm
	$\therefore X_b = \frac{1.5 \times 514 \times 1.3}{1.5 \times 0.6^2}$	$\therefore X_b = \frac{1.5 \times 1189.36 \times 1.3}{1.5 \times 2.24^2}$
	$= 1856$ kgf/cm^2	$= 308$ kgf/cm^2
Shared by	4 fingeres	4 wedges
Factor of safety	100%	100%
$\therefore$ Minimum cross-breaking stress the	$= \frac{1856}{4} \times 2$	$= \frac{308}{4} \times 2$
supports should be able to withstand	$= 928$ kgf/cm^2	$= 154$ kgf/cm^2
Inference	Only SMC supports must be used	DMC supports can be used
Shearing stress S_s at section $a - a$	$A = 0.6 \times 1.5$ cm^2	$A = 2.24 \times 1.5$ cm^2
$S_s = \frac{F_m}{A}$	$\therefore S_s = \frac{514}{0.6 \times 1.5}$	$\therefore S_s = \frac{1189.36}{2.24 \times 1.5}$
(A = cross-sectional area of section $a - a$)	$= 571$ kgf/cm^2	$= 354$ kgf/cm^2
Shared by	4 fingers	4 wedges
Factor of safety	100%	100%
$\therefore$ Min. shearing stress the	$= \frac{571}{4} \times 2$	$= \frac{354}{4} \times 2$
support should be able to withstand	$= 285.5$ kgf/cm^2	$= 177$ kgf/cm^2
Inference	DMC supports may be used but limiting factor is cross-breaking stress hence only SMC supports must be used	DMC supports can be used
3 Bending (cantilever)	$L = 3.9$ cm	$L = 3.9$ cm
or flexural stress, B_s at	$a = 1.0$ cm	$a = 1.0$ cm
Section y–y, $\frac{F_m \cdot L}{M}$	$b = 6 - 2 \times 0.85$	$b = 5.2 - 2 \times 0.85$
	$= 4.3$ cm	$= 3.5$ cm
where		
$M = \frac{1}{6} \cdot a \cdot b^2$	$\therefore M = \frac{1}{6} \times 1.0 \times (4.3)^2$	$\therefore M = \frac{1}{6} \times 1.0 \times 3.5^2$
	$= 3.08$ cm^3	$= 2.04$ cm^3
	and $B_s = \frac{514 \times 3.9}{3.08}$	and $B_s = \frac{1189.36 \times 3.9}{2.04}$
	$= 650.8$ kgf/cm^2	$= 2273.8$ kgf/cm^2
Shared by	4 supports	2 supports
Factor of safety	100%	100%
$\therefore$ Min. bending stress the supports	$= \frac{650.8}{4} \times 2$	$= \frac{2273.8}{2} \times 2$
may have to withstand	$= 325.4$ kgf/cm^2	$= 2273.8$ kgf/cm^2

(Contd.)

Table 28.9 Contd.

	Example 28.12 *Figures 28.34 and 28.36*	*Example 28.6* *Figures 28.16* and *28.37*
Inference	DMC supports may be acceptable but limiting factors is cross-breaking stress, at location *a – a*. Hence only SMC supports must be used	SMC supports alone must be used with a modified design, to withstand a higher bending stress or the design of the bus system itself be modified as mentioned below under note 3.
Conclusion	In this particular instance, section *a – a* at the fingers is more vulnerable. If the supports fail, they may fail from here.	In this case, section *y – y* at the bolt mounting holes is more vulnerable. If the supports fail, they may fail from here.

Notes

1 Factor of safety
It is possible that during the fault only one of the insulators is subject to the transitory first peak of the fault, as there may be slight misalignment between the insulators, asymmetry in the busbars, an imperfect bolt fixing and their fastening, or a combination of such factors. To be on the safe side it is advisable to consider each support and its fasteners to be suitable to withstand the forces by themselves. We have assumed a factor of safety of 100% in all the above calculations to account for this.

2 F_m for all particular fault levels remains the same, irrespective of the current rating of the system (equation (28.4). A low current system employs fewer and smaller busbars and is supported on less and smaller supports and hardware. Such a system therefore may have to withstand much higher stresses than a higher current-carrying system and is more likely to yield to such stresses unless adequate measures are taken while selecting the size of supporting hardware or spacing (ℓ) between the adjacent horizontal supports.

3 When a component supporting the current-carrying system is likely to be subject to severe stresses, and its own stress-bearing capacity may be marginal as in Example 28.6, it is advisable to take a higher size of such a component in its thickness or diameter or a better quality material. It is also possible to mitigate the stresses by reducing the distance between the two mounting supports of the same phase (ℓ to be <400 mm). In the above case we have assumed this as 400 mm. If the centre spacing *S* between the two phases can be raised conveniently, it can also reduce the severity of F_m.

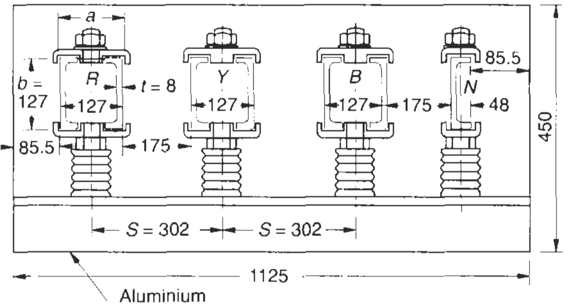

Figure 28.38 Configuration of channels in box form for Example 28.12(b)

- Derating for altitude = 1.0
- Derating for size of enclosure;

Area of each channel = 1695 mm^2 (Table 30.9)

$\therefore$ Total area of active material

$= 7 \times 1695$ mm^2

Area of enclosure = 1125 × 450 mm^2

$$\therefore \text{ enclosure factor } = \frac{7 \times 1695}{1125 \times 450}$$

$$= 2.34\%$$

Derating as in Table 28.6 for item 2 $\simeq$ 0.8

- Derating due to skin effect – included in the basic rating of channels at 5440 A (Table 30.9)
- Derating due to proximity = minimum 0.80

$$\therefore \text{ Total derating } = 1 \times 0.815 \times 1 \times 0.8 \times 1 \times 0.80$$
$$= 0.5216$$

$$\therefore \text{ Actual current rating of channels} = 0.5216 \times 5440$$
$$= 2837.5 \text{ A}$$

which is good for the required rating. The conductors have enough margin for higher load demands which may arise due to a voltage drop of up to –10% of the rated voltage if most of the loads are industrial drives.

Voltage drop

- Skin effect

d.c. resistance for one channel (Table 30.9)

$= 18.41\ \mu\Omega/\text{m}$ at 20°C

R_{dc} at 85°C $= 18.41 \times 1.236^*$ per channel

(refer to step (iv) above)

and for the box $= \dfrac{18.41 \times 1.236}{2}$

$= 11.38 \times 10^{-3}\ \Omega/1000$ m

Active area per phase $= 2 \times 1695$ mm^2

$= 33.9$ cm^2

Skin effect ratio from Figure 28.13(c) for

$$\frac{t}{a} = \frac{8}{127} = 0.06$$

$$\frac{R_{ac}}{R_{dc}} = 1.05$$

$$\therefore R_{ac} = 1.05 \times 11.38 \times 10^{-3}$$
$$= 0.01195\ \Omega/1000 \text{ m}$$

- Proximity effect
  From Figure 28.19(c) conductor effective spacing

$$S_e = \sqrt[3]{S_{AB} \cdot S_{BC} \cdot S_{CA}}$$

$$S_{AB} = S_{BC} = 302 \text{ mm}$$

and $S_{CA} = 2 \cdot S_{AB} = 604$ mm

$$\therefore \; S_e = \sqrt[3]{302 \times 302 \times 604}$$

$$= 380.5 \text{ mm}$$

and X_a from graph of 127 mm channel = 108 $\mu\Omega$/m

= 0.108 Ω/1000 m per phase

- Impedance

$$Z = \sqrt{0.01195^2 + 0.108^2}$$

$$= 0.108 \; \Omega/1000 \text{ m}$$

- Voltage drop for 50 m length in phases *R* and *B*

$$= 2500 \times 0.108 \times \frac{50}{1000}$$

$$= 13.5 \text{ V}$$

which is 3.25% for a system voltage of 415 V. The system chosen is good up to a length of 50 m. Beyond this the voltage drop may exceed the desirable limits and require either larger channels or a reduced centre spacing *S*. Reduced spacing *S* is possible in this instance due to the sufficient margin available in the rating of the channel section chosen.

(viii) Effect of proximity on the centre phase Y
Let us assume a length of 50 m. The voltage drop in phase *Y*, because of R_{ac}, assuming content of $X_a = 0$

$$= 2500 \times 0.01195 \times \frac{50}{1000}$$

$$= 1.49 \text{ V}$$

∴ Supply-side voltages of phases *R* and *B*

$$= \frac{415}{\sqrt{3}} - 13.5 = 226 \text{ V}$$

and of phase $Y = \frac{415}{\sqrt{3}} - 1.49 = 238$ V

which will provide a reasonably balanced system. To make it more balanced a reactor can be inserted into the middle phase along similar lines to those calculated in Example 28.10 for a reactance of

$$X_a = 0.108 \times \frac{50}{1000} = 5.40 \times 10^{-3} \; \Omega$$

For the rest of the calculations for mechanical suitability of the busbar system the procedure for rectangular sections can be followed.

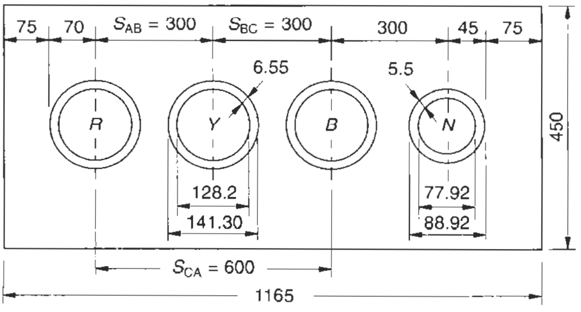

(All dimensions in mm)

Figure 28.39 Illustrating Example 28.12(c), with tubular bus sections

(C) Tubular sections
Now consider a tubular section for the same requirements.
Choose a tube of size 5" (standard pipe) from Table 30.8 having the following dimensions,

For phases

Outside diameter (OD) = 141.30 mm = $2 \cdot r_1$

Inside diameter (ID) = 128.20 mm = $2 \cdot r_2$

A = 2724 mm^2

Nominal current rating = 3550 A

For a neutral choose a tube of size 3", having

OD = 88.90 mm

and ID = 77.92 mm

A = 1439 mm^2

Arrange them as in Figure 28.39.
Likely deratings:

- For grade of busbars, for E-91E = 1.0
- For ambient temperature = 0.815
- For altitude = 1.0
- For enclosure factor

$$= \frac{3 \times 2724 + 1 \times 1439}{450 \times 1165}$$

$$= 1.83\%$$

$$\therefore \text{ derating} \simeq 0.83$$

- For proximity ≃ 0.9 (such sections, because of their shape, would have a low proximity effect as noted later)

$$\therefore \text{ Total derating} = 1 \times 0.815 \times 1 \times 0.83 \times 0.9$$

$$= 0.609$$

$$\therefore \text{ Actual current rating} = 0.609 \times 3550$$

$$= 2162 \text{ A}$$

The busbars and the inside of the enclosure may be painted with matt finish black paint to make this section suitable for

$$= 1.2 \times 2162$$

$$= 2594 \text{ A}$$

If voltage variation is also to be considered, then one may have to choose the next higher size. As in Table 30.8, one can choose an extra-heavy pipe of 5" size.

Voltage drop
For skin effect:

d.c. resistance $R_{dc20} = 11.3 \; \mu\Omega$/m from Table 30.8

∴ $R_{dc85} = 11.3 \times 1.236^*$ (refer to step (iv) above)

$$= 13.97 \; \mu\Omega/\text{m}$$

Active area per phase = 2724 mm^2

∴ skin effect ratio from Figure 28.13(b)

Relevant Standards

IEC	*Title*	*IS*	*BS*	*ISO*
60059/1999	Standard current ratings (Based on Renald series *R*-10 of ISO-3)	–	–	3/1973
60439-1/1992	Low voltage switchgear and controlgear assemblies Specification for type-tested and partially type tested assemblies	8623-1/1993	BS EN 60439-1/1994	
60439-2/1987	Low voltage switchgear and controlgear assemblies Particular requirements for busbar trunking systems	8623-2/1993	BS EN 60439-2/1993	
–	Hexagon head bolts. Product grade C	1363-1/1992	BS EN 24016/1992	4016/1988
–	Hexagon head screws. Product grade C	1363-2/1992	BS EN 24018/1992	4018/1988
–	Hexagon nuts. Product grade C	1363-3/1992	BS EN 24034/1992	4034/1986
–	Hexagon head bolts. Product grades A and B	1364-1/1992	BS EN 24014/1992	4014/1986
–	Hexagon head screws. Product grades A and B	1364-2/1992	BS EN 24017/1992	4017/1988
–	Hexagon nuts, style 1. Product grades A and B	1364-3/1992	BS EN 24032/1992	4032/1986
–	Hexagon thin nuts (chamfered). Product grades A and B	1364-4/1992	BS EN 24035/1992	4035/1986
–	Hexagon thin nuts. Product grade B	1364-5/1992	BS EN 24036/1992	4036/1979
–	Mechanical properties of fasteners	1367-3,6,20	BS EN 20898-1,2,7	898-1,2,7
–	Interconnecting busbars for a.c. voltage above 1kV up to and including 36 kV	8084-1992	BS 159/1992	
–	Criteria for earthquake resistant design of structures	1893/1991	DD ENV 1998 (1 to 5)	
–	Plain washers	2016/1996	–	

Relevant US Standards ANSI/NEMA and IEEE

NEMA L11/1983	Industrial laminated thermosetting products
ANSI/IEEE C37.23/1992	Metal enclosed bus and guide for calculating losses in isolated phase bus

Notes

1 In the tables of Relevant Standards in this book while the latest editions of the Standards are provided, it is possible that revised editions have become available. With the advances of technology and/or its application, the updating of Standards is a continuous process by different Standards organizations. It is therefore advisable that for more authentic references, readers should consult the relevant organizations for the latest version of a Standard.

2 Some of the BS or IS standards mentioned against IEC may not be identical.

3 The year noted against each standard may also refer to the year of its last amendment and not necessarily the year of publication.

$$\frac{t}{d} = \frac{6.55}{141.3} = 0.046 \quad \left[t = \frac{141.3 - 128.2}{2} = 6.55\right]$$

$$\frac{R_{ac}}{R_{dc}} \simeq 1$$

$$\therefore R_{ac85} \simeq R_{dc85} = 13.97\ \mu\Omega/\text{m}$$

$$= 0.01397\ \Omega/1000\ \text{m}$$

For proximity effect:

From Figure 28.21 $\frac{r_2}{r_1} = \frac{128.2}{2} \div \frac{141.3}{2}$

$$= 0.907$$

Corresponding to this $D_s/r_1 = 0.967$

$$\therefore D_s = 0.967 \times \frac{141.3}{2} = 68.3\ \text{mm}$$

and $S_e = \sqrt[3]{S_{AB} \cdot S_{BC} \cdot S_{CA}}$

(refer to Figure 28.39)

$$= \sqrt[3]{300 \times 300 \times 600}$$

$$= 1.26 \times 300$$

$$= 378\ \text{mm}$$

Corresponding to this, the reactance from Figure 28.19(b) can be determined by extrapolation. We have assumed it to be 0.06 Ω/1000 m per phase.

- Impedance $Z = \sqrt{0.01397^2 + 0.06^2}$

$$= 0.0616\Omega/1000\ \text{m}$$

- Voltage drop for 50 m length in phases *R* and *B*

$$= 2500 \times 0.0616 \times \frac{50}{1000}$$

$$= 7.7\ \text{V}$$

which is only 1.86% for a system voltage of 415 V, and is satisfactory.

Effect of proximity on the centre phase Y

The voltage drop in this phase, assuming $X_a = 0$

$$= 2500 \times 0.01397 \times \frac{50}{1000}$$

$$= 1.75 \text{ V}$$

which is only 0.4% of the system voltage. This bus system will thus provide a near-balanced system.

For the rest of the calculations for the mechanical suitability of a busbar system the procedure for rectangular sections can be followed.

List of formulae used

Short-circuit effects

(1) Thermal effects

$$\theta_t = \frac{k}{100} \cdot \left(\frac{I_{sc}}{A}\right)^2 \cdot (1 + \alpha_{20}\theta) \cdot t \qquad (28.1)$$

θ_t = temperature rise in °C

I_{sc} = symmetrical fault current r.m.s. in Amp

A = cross-sectional area of the conductor in mm^2

α_{20} = temperature coefficient of resistance at 20°C/°C

θ = operating temperature of the conductor at which the fault occurs in °C

K = 1.166 for aluminium and 0.52 for copper

t = duration of fault in seconds

or $\frac{I_{sc}}{A} \times \sqrt{t}$ = 0.0799 for aluminium for an operating temperature at 85°C and end temperature at 185°C (28.2)

$\frac{I_{sc}}{A}\sqrt{t}$ = 0.12 for copper for an operating temperature at 85°C and end a temperature at 185°C (28.3)

(2) Electrodynamic effects

$$F_m = k \cdot \frac{16 \cdot I_{sc}^2}{S} \times 10^{-4} \text{ N/m} \qquad (28.4)$$

F_m = maximum dynamic force that may develop on a fault

I_{sc} = r.m.s. value of the symmetrical fault current in Amps

k = space factor

S = centre spacing between two phases in mm

Skin effect

Effect on current-carrying capacity

$$I_{ac} = I_{dc} \cdot \sqrt{\frac{R_{dc}}{R_{ac}}} \qquad (28.5)$$

I_{ac} = permissible current capacity of the system

R_{dc} = d.c. resistance

R_{ac} = a.c. resistance

I_{dc} = d.c. current

Conductor resistance at higher temperature

$$R_{dc} \text{ at } 85°\text{C} = R_{dc20}\,[1 + \alpha_{20}(\theta_2 - \theta_1)] \qquad (28.6)$$

α_{20} = temperature coefficient of resistance at 20°C per °C

R_{dc20} = d.c. resistance at 20°C

θ_2 = operating temperature = 85°C

θ_1 = since the value of R_{dc} is available at 20°C therefore, θ_1 = 20°C

Proximity effect in terms of busbar reactance

$$S_e = (S_a \cdot S_b \cdot S_c)^{1/3} \qquad (28.7)$$

S_e = effective or geometric mean spacing

S_a, S_b, and S_c = spacing between conductors

Use of saturable reactor to balance a large unbalanced power distribution system

To determine size

$$X_p = V_{ph}\left(\frac{1}{I_r} - \frac{1}{I_y}\right) = 2\,\pi \cdot f \cdot L \qquad (28.8)$$

X_p = lost reactance of Y phase

L = inductance of X_p

I_r = current in R or B phase

I_y = current in Y phase

Reluctance of the magnetic path

$$R_l = \frac{2\,l_g}{\mu_o \cdot A} + \frac{k - 2l_g}{\mu_o \cdot \mu_r \cdot A} \qquad (28.9)$$

l_g = length of the air gap in metres

μ_o = permeability of air (free space) = $4\pi \cdot 10^{-7}$ H/m

μ_r = relative permeability of the silicon steel used for the laminates in H/m

A = area of cross-section of core in square metres

k = total length of the magnetic circuit in metres

Calculating stresses on a fault

Bending stress on busbars at section

$$x - x = \frac{F_m \cdot l}{12 \cdot M \cdot N} = \text{kg/cm}^2 \qquad (28.10)$$

F_m = maximum electrodynamic forces acting on each support in the event of a fault

l = centre distance between two busbar supports

M = sectional modulus of each busbar at section $x - x$

$= \frac{1}{6}\,a \cdot b^2$ in cm^3

N = number of busbars per phase

Further reading

1 ERDA, 'Study on feasibility of upgrading the operating temperature of Al busbars without plating'.

2 Golding, E.W., *Electrical Measurements and Measuring Instruments.*

3 Lynthall, R.T., *The J & P Switchgear Book.* Butterworth, London.

4 Thomas, A.G. and Rata, P.J.H., *Aluminium Busbar.* Hutchinson Scientific and Technical for Alcan Industries Ltd.

29

Recommended Practices for Mounting Buses and Making Bus Joints

Contents

29.1 Precautions in mounting insulators and conductors

Often a failure on a fault may be due not to the inadequate size of busbars, fasteners or insulators but to poor alignment of the insulators or to too large a gap between the busbar and the insulator slots. It may be a consequence of an inappropriate mounting or unequal width of the busbars or insulator slots. In such cases, load sharing will be uneven and the weakest section may fail. This can be illustrated as follows:

1 As shown in Figure 29.1(a) as a result of loose fit of busbars with an unequal gap, the insulators (shaded in the figure) may fail for the following reasons:
   - Misalignment of insulators may cause an unequal distribution of forces.
   - A loose fit of busbars inside the slots may cause excessive vibrations on a fault and may lead to loosening of the fasteners and shearing of the wedges and/or the edges and the fingers of the insulators. Even the insulator mounting section $x - x'$ may become vulnerable to failure.
2 When one or all of the busbars are shorter in width as shown in Figure 29.1(b) the upper insulator may fail at the shaded parts through the wedges or the edges, as they will now encounter relatively higher cantilever forces.

Conclusion

1 Loose busbars within the slots give rise to vibrations and a humming noise due to magnetic inductance. This may lead to loosening of fasteners and be detrimental to the performance of the busbar system in the long run. To lessen the effect of this, the busbars should be only marginally loose inside the slot for easy movement during expansion or contraction. This requires accurate size of insulators and correct mounting and alignment as shown in Figure 29.1(c). In this case all the load-bearing members are equally involved in sharing the force and make the system stable and strong.

2 One may consider a factor of safety of 50–100%, depending upon the criticality of the installation in all the forces that may arise on an actual fault to ensure a foolproof system.

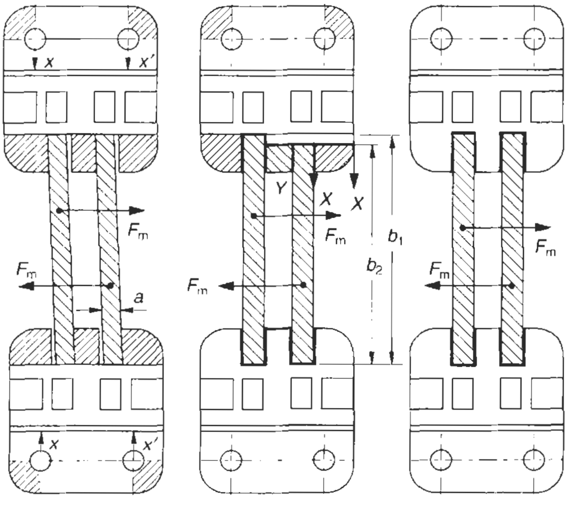

(a) (b) (c)

(a) Smaller thickness of Busbars '*a*'
It may cause vibrations within the insulator slots during a fault and magnify forces acting on the insulators and fasteners
(b) Unequal width of busbars '*b*' (b_1, b_2)
The insulator may shear off at Section $X - X$ or yoke y
(c) Proper mounting

Figure 29.1 Mountings of insulators and busbars

29.2 Making a joint

This requires special precautions for both aluminium and copper, as both metals are highly susceptible to oxidation and corrosion. Oxides of aluminium and copper are poor conductors of heat and electricity and must be avoided, particularly at joints rather than in the straight lengths, to ensure proper transmission of current from one section of the bus to another. Also, aluminium is soft. Making a perfect joint to achieve a longer durability is therefore essential. It involves attaining the least contact resistance by ensuring proper contact pressure to eliminate any localized heat. A slightly faulty joint may yield to faster erosion of the metal and relaxation of the contact pressure. Loose contact pressure will lead to high contact resistance and cause a high localized heat, which may result in ultimate failure of the joint. For instance, if the outer diameter, thickness or the hole of the washer is not commensurate with the diameter of the hole in the busbar then the washer may gradually sag into the hole, in normal service, through pressure by the bolt. Gradually it may loosen its grip at the joint, release the contact pressure and lead to failure of the joint.

The contact resistance can be minimized by increasing the pull of the fasteners. Increasing the area of overlap may not reduce the contact resistance, unless the number of fasteners is also increased. It is mandatory to maintain a certain minimum contact pressure per unit area of the joint overlap. An average contact pressure at around 40–55 kg/cm^2 is considered adequate. For the purpose of easy application, it is expressed in terms of bolt torque, depending upon the area of overlap and the number of fasteners, as specified in Table 29.1.

The following are more precautions that are considered mandatory for making a good joint:

1 Before making the joint, clean the surface and apply the contact grease to avoid oxidation, as discussed in Section 13.6.1(iv).
2 Make the joint immediately after the above process.
3 Make the joint by using the correct size of bolts, nuts and washers. Refer to Table 29.1 for the recommended number and size of fasteners for different widths of bus sections and Table 29.2 for the recommended size of washers for different sizes of bolts. See also

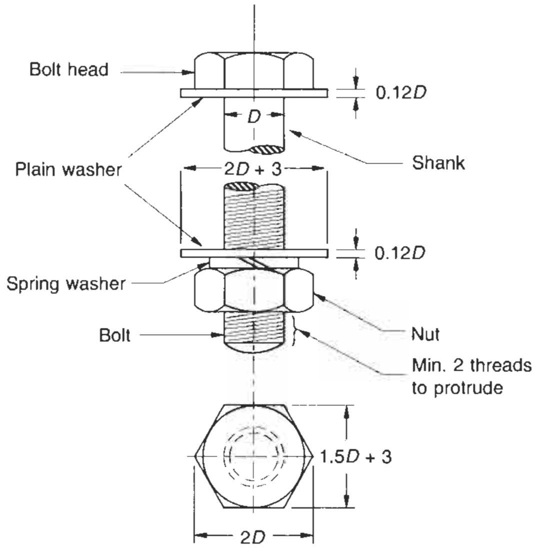

Figure 29.2(a) Correct procedure for using a bolt and nut assembly

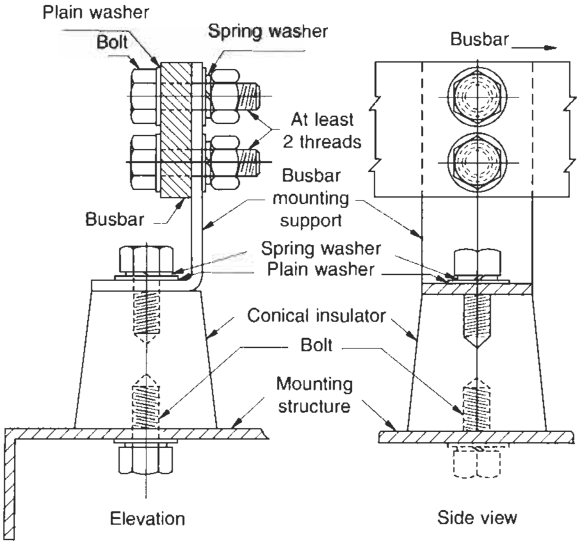

Figure 29.2(b) A typical mounting and fixing arrangement of a conical insulator and a flat busbar

Figures 29.2(a) and (b) for a correct fastening method.

4 For jointing large bus sections it may be advisable to use pressure plates to avoid excessive local pressure.

5 Use a torque wrench to tighten the fasteners to ensure correct surface-to-surface contact of the current-carrying parts (Figure 29.2(c)). The recommended values of bolt torque are given in Table 29.1. A pressure that is too high may cause relaxation of the joint by cold flow and must be avoided.

29.2.1 Straight-through joints

To join two sections of a bus, fishplates are used as illustrated in Figure 29.5. Slotted holes are usually provided in the fishplate to allow for fixing adjustments. They are not meant to absorb the thermal expansion of the busbars on load, for they are supposed to make a rigid joint, hence there is no scope for surface movement. For typical sizes of slots, refer to Table 29.1, and for washers, Table 29.3. Smaller sections and single busbars can also be joined by simple overlapping as shown in Figure 29.6.

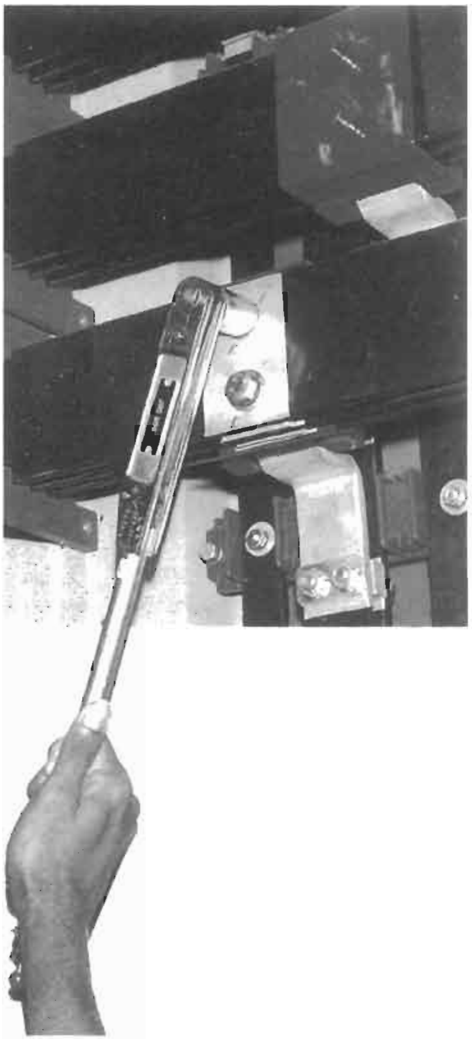

Figure 29.2(c) Use of manual torque wrench to tighten the fasteners (motorised spanners are employed for faster production)

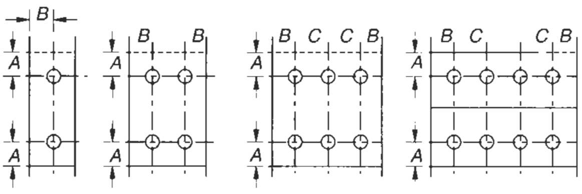

Figure 29.3 Busbar bolting for Table 29.1

Table 29.1 Recommended busbar overlaps for different sizes and torques of fasteners

Bar width	*Length of overlap*	*Bolt arrangement as indicated in Figure 29.3*	*Dimensions (Figure 29.3)*			*Bolt size*	*Hole diameter*	*Minimum recommended bolt torque*	*Typical size of slots for fishplates or straight through joints*
1	*2*	*3*	*4*			*5*	*6*	*7*	*8*
			A	*B*	*C*				
mm	*mm*		*mm*	*mm*	*mm*		*mm*	*kgm*[a]	*mm*
25.4	50[b]	1	12.5	12.5	–	M6/M8	6.6/9	1.5/2.5	–
38.1	76[b]	1	19	19	–	M10	11	3.5	11 × 16
50.8	76[b]	1	25	25	–	M12	14	5.5	14 × 18
76.2	76	2	19	19	–	M10	11	3.5	11 × 16
101.6	102	2	27	27	–	M12	14	5.5	14 × 18
152.4	152	3	32	29	48	M12	14	5.5	14 × 18
203.2	203	4	32	29	48	M12	14	5.5	14 × 18

[a] These torque values will normally require high tensile fasteners.

[b] Overlap for tee joints even up to the width of bar will be adequate. Such as, for a tee joint of 50.8 mm wide bar, with a 101.6 mm straight bar, 50.8 mm overlap will be adequate, refer to Figure 29.7.

Table 29.2 Recommended sizes of punched washers for hexagonal bolts and screws as in IS 2016 to make a good joint

Bolts size	*d* *mm (max)*	*D* *mm (min.)*	*S* *mm (min)*	*Conical Belliville washers* *h*[a] *(max.) mm*
	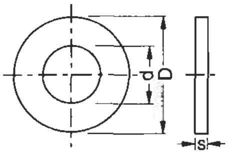			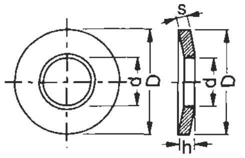
M 6	6.6	12.5	1.6	2.0
M 8	9	17	1.6	2.6
M 10	11	21	2.0	3.2
M 12	14	24	2.5	3.95

[a] Based on DIN 6796 for conical spring washers for bolt/nut assemblies.

Notes

1 The above are the sizes of washers when the hole in the busbar is circular. If the hole is in the shape of a slot, as recommended in Table 29.1, column 8, to facilitate easy jointing of the fishplates or straight-through joints, then the bulk of the washer should span the slot as illustrated in Figure 29.4. A normal size of washer as noted above may lose its efficacy and sag into it (by setting), loosen its grip in the course of time, and lead to failure. In such cases it may be recommended to use either pressure plates or heavy washers. The washers may be chosen corresponding to the larger width of the slot, considering this as its hole size *d*, as noted in Table 29.3, to achieve a good rigidity and stability of washers to maintain the required contact pressure over long periods of service.

2 Where the contact pressure is of utmost importance, it is recommended to use conical washers (some call them Belliville washers) to counteract the loosening of a bolt and nut assembly, caused by setting or indentation. The last column of Table 29.2 indicates the vital dimension *h* for such washers as in DIN–6796.

Table 29.3 Recommended sizes of washers for slots

Slot size	*Recommended size of washer for slot d*	*Sizes of normal washers as in IS 2016*		
		d	*D*	*S*
mm	*mm*	*mm*	*mm*	*mm*
11 × 16	16	11	21	2.5
14 × 18	18	14	24	3.15

Overlapping of joints

Correct-overlapping of joint is an important parameter to make a good joint, as well as to allow no excessive heat at the joints. Based on the recommendations of the leading aluminium section manufacturers, the desired overlaps are shown in Table 29.1, and two such joints are illustrated in Figures 29.4 and 29.6. Laboratory tests and site experience have revealed that a larger overlap is of no additional benefit. For larger sections also, only

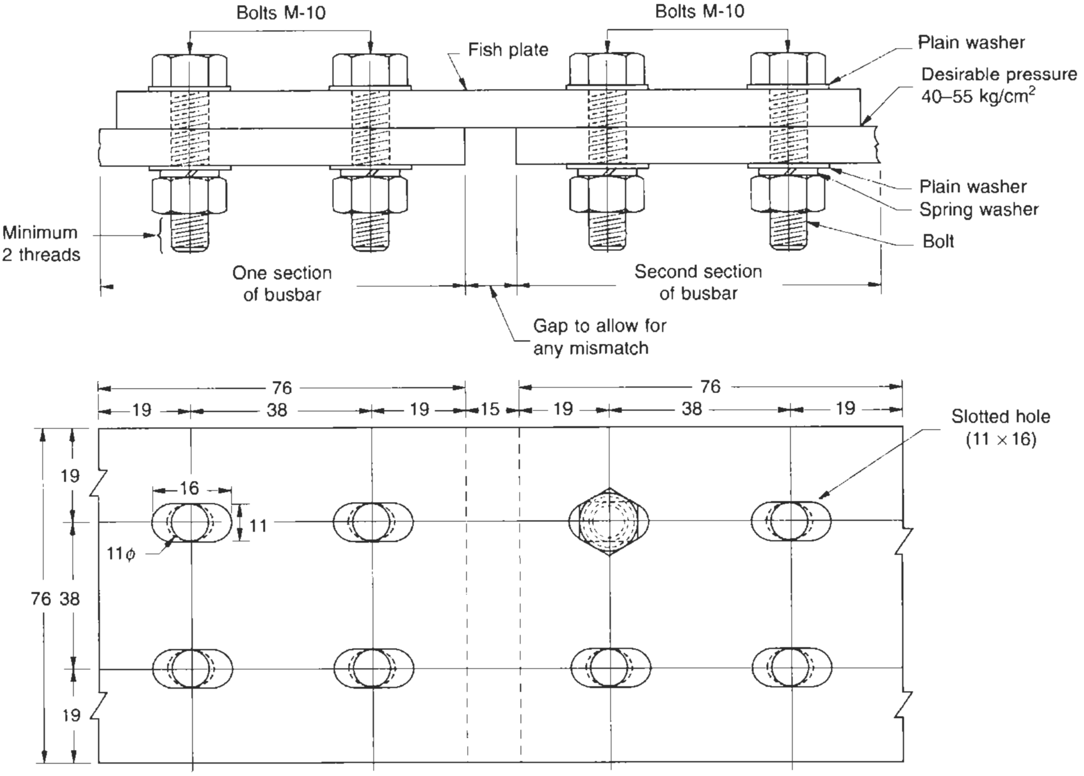

(All dimensions in mm.)

Figure 29.4 A typical arrangement for jointing two sections of a busbar through a fish plate

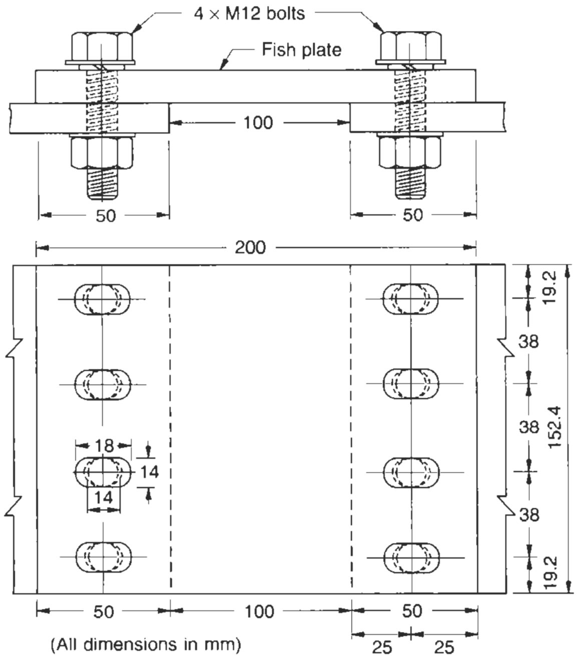

(All dimensions in mm)

Figure 29.5 Another arrangement for jointing two sections of a busbar through a fish plate

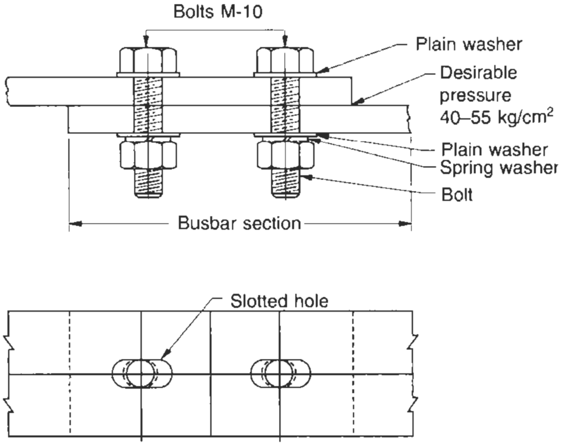

Figure 29.6 Jointing of two single busbar sections

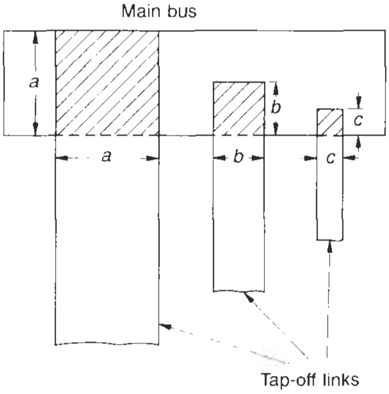

Figure 29.7 Tap-off connections from a large section of busbar showing the overlap as equal to the width of the smaller section tap-off links

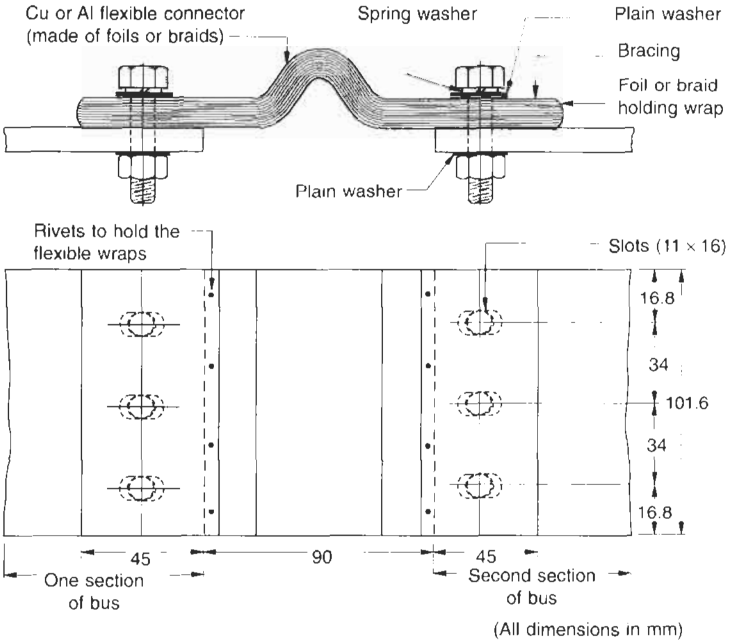

Figure 29.8 A typical flexible expansion joint

one row of fasteners, as illustrated in Figure 29.5, is considered adequate to provide a reasonably good joint, so long as the recommended contact pressure per unit area, of 40–55 kg/cm^2 is maintained, as indicated earlier.

29.2.2 Tee joints

Refer to Figure 29.7 when making a tee joint with a larger section of bus to tap for the outgoing feeders in a PCC or MCC from the main bus. A smaller overlap up to the width of the feeder bus section will be sufficient to provide an adequate contact area and bolting surface.

29.2.3 Expansion joints

During normal operation busbars undergo elongation as a result of heating. When the busbars are short, as in a PCC or MCC, and have free ends, no provision to account for expansion of busbars will be necessary. Expansion of the structure on which the busbars are mounted and the free ends will absorb the small expansion. But for longer lengths and when the end of the bus is to be bolted at a rigid end, as at a transformer, expansion joints must be provided at suitable locations to absorb the linear expansion of the busbars. For the normal grade of aluminium in use, the linear temperature coefficient of expansion can be considered to be 0.000023 mm/°C (Table 30.1). A busbar 25 m long and operating at a temperature of 85°C having a temperature rise of 40°C above an ambient of 45°C will have an expansion of 25 × 1000 × 40 × 0.000023 mm, i.e. 23 mm. In such cases, the busbars must have free longitudinal movement and must be provided with suitable expansion joints at reasonable intervals, say, at every 7.5/10 m. Busbars supported on bolted clamps as shown in Figure 29.2(b) are not recommended as they block the expansion of the busbars, which may deform the busbars and result in damage to the insulators and the supports and cause a fault. Finger-type busbar supports, as shown in Figure 13.31 must be preferred to clamp type supports.

The expansion joints may be of aluminium or thin copper sheets (foils 32 gauge and thinner) or even copper-braided wires to allow easy flexibility on expansion. Figure 29.8 illustrates one such flexible joint. The normal procedure to make a flexible joint is to fold these sheets together and press clamps at the ends, as shown in Figure 29.9, where it is to be bolted with the bus sections. It is riveted at convenient locations to hold the foils in position. To avoid oxidation at the contact area, when it is open to atmospheric conditions, it is recommended to brace them at the edges where they are to make the joint, as shown in Figures 29.8 and 29.9. Fusion welding, inert gas, metal or tungsten arc welding processes are recommended for this purpose.

29.2.4 Flexible joints

- This is a synonym for an expansion joint.
- A flexible-end joint connects a generator or transformer to a bus system or a bus system to a power panel.
- An expansion joint connects two straight, normally aligned sections of the same run of busbars.
- A flexible joint may also have to connect two non-aligned sections of current-carrying conductors, which may also be different in configuration and size (Figure 29.10). They may therefore be longer than an expansion

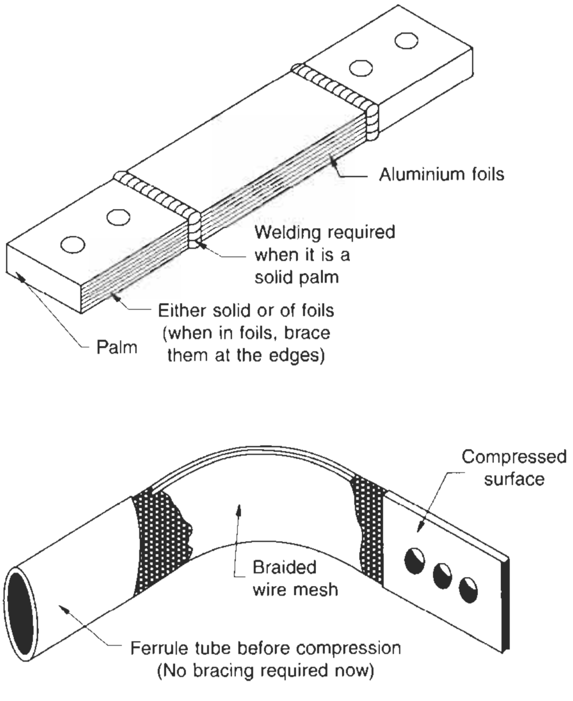

Figure 29.9 Making a flexible connector

joint to suit the site requirement and help to connect the two ends.

The purpose of a flexible joint is thus to make an electrical connection and to absorb the busbar's expansion and vibrations of the generator or the transformer and to prevent transmission of these vibrations to the bus system and mounting structure.

Depending on the rating and length of the bus system, a flexible-end joint may be necessary at the panel end also to absorb expansion of the busbars and also to assist in making the end connections when the configurations of the bus sections in the equipment are different or have a mismatch, although there are no vibrations at the panel end.

It is normal practice to provide a flexible copper joint at the generator or the transformer end as the terminals are also of copper and usually have a smaller spacing between them, where termination of aluminium flexibles may present a problem (although the use of aluminium flexible is not forbidden).

29.2.5 Bimetallic joints

Electric current passing through a metal joint having a moisture content causes electrolysis of water vapour. Copper, being a galvanic metal, forms an electrolytic circuit with other metals and decomposes the joint. Decomposition is corroding and erodes the aluminium metal.

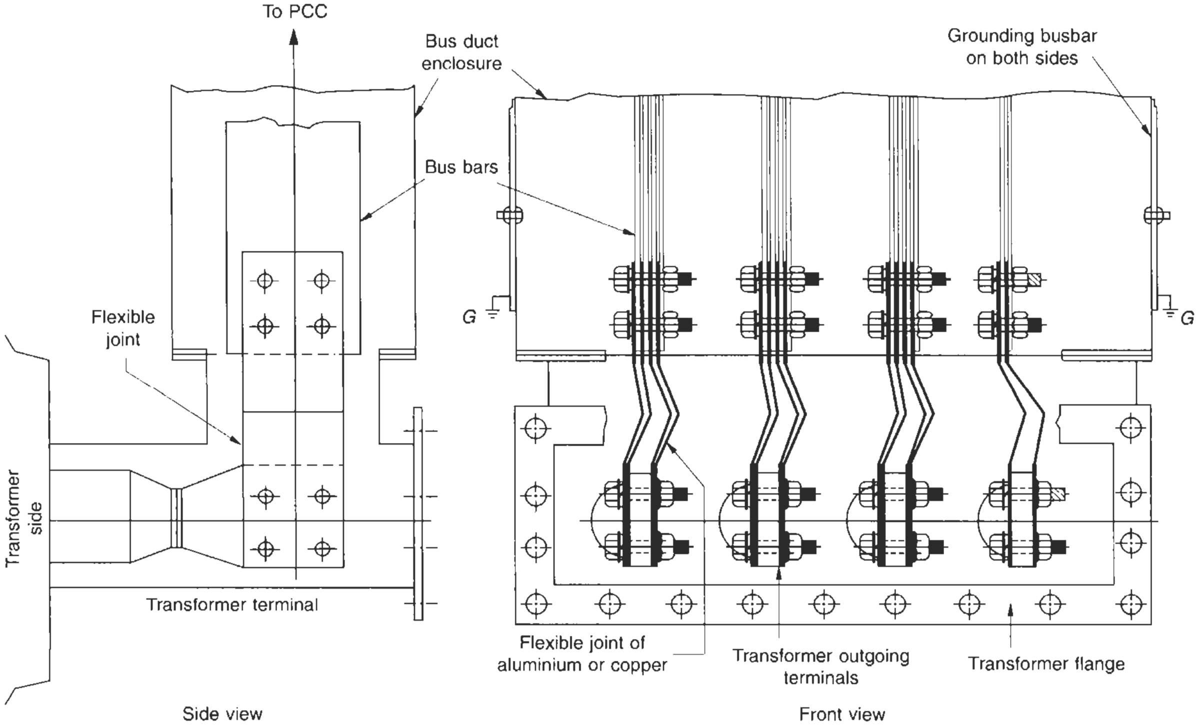

Figure 29.10 Typical arrangement of a flexible connection between a bus duct and a transformer

For making joints between aluminium and copper, care should be taken that both surfaces are properly cleaned and dried and applied with a thin layer of grease, before jointing, to eliminate electrolysis between the two metals in the presence of moisture. It is recommended that such a surface (particularly of copper) be tin or sliver plated to avoid electrolysis, which may take place with the passage of time. Such a situation is predominant when making aluminium connections to the main switchgear devices and components such as breakers, switches, fuses, contactors, relays and all other current-carrying and switching devices. The connecting terminals of all these components are invariably of copper or bronze alloy. As standard practice, these terminals, are either silver plated or tin plated to facilitate a direct jointing or connection with aluminium links. However, use of grease at every joint and precautions, to eliminate the presence of moisture at the joints is mandatory to ensure a good joint.

Some application engineers may, however, prefer a bimetallic joint (e.g. a Cupal joint) for jointing between copper and aluminium. A bimetallic (Cupal) joint has copper foil on one side and aluminium on the other. The basic purpose of such a joint is to eliminate electrolysis during normal operation. It becomes superfluous, when proper care is taken in making the joint as noted above. It is a misconception that such a joint can deal with differential expansions of the two metals.

Checking a joint

It is important to check the fitness of a bus joint made in a factory or at site. This can be done with the aid of a d.c. millivolt drop or measurement of the joint resistance (mΩ) test. Such measurements are taken on a number of similar joints and the results tabulated and compared. Values in the same range may be considered good joints, while those with wide variations will be indicative of a poor joint. Such joints may then be investigated and improved.

29.2.6 Silver plating of joints*

It is sometimes preferred to silver plate aluminium joints to eliminate any possibility of contact oxidation and to ensure an almost uniform current distribution through the contact area without an excessive heating. Such a practice may, however, be of little advantage to smaller ratings in view of cost. It will be worth while only for higher currents, say, 2500 A and above and also for higher operating temperatures. It is seen that the oxidation of aluminium or copper starts at about 85–90°C. It is for this reason that the operating temperature of a bus system is limited in this region, as discussed already (Table 28.3). At higher ratings it is therefore recommended either to weld the edges of the joints (straight-through or flexibles) to seal the openings and prevent any oxidation during operation, or to silver plate the joints. Silver oxide is a good conductor of heat and electricity. With the use of silver joints or welded joints, a higher operating temperature of the busbars and the joints is permissible up to 105°C (Table 28.2) as against 70°C as in Table 28.2 (IEEE-C-37-20) or 85–90°C as in Table14.5 (IEC-60439-2) in ordinary joints. With the use of silver plated joints therefore, the rating of a bus system may be improved and the use of metal optimized. See also Section 28.5.1.

29.3 Bending of busbars

Bending a busbar also requires utmost care. Smaller sections may not matter as much as larger and thicker sections. The metals (particularly aluminium), being brittle, may show up cracks, particularly on the outer surfaces, when bent, as a result of excessive tensile force at this surface. The cracks may reduce the current-carrying capacity of the busbar at this section, besides rendering it mechanically weak, to withstand the electrodynamic forces on a fault. Sharp bends are therefore not recommended. When it becomes necessary to have sharp bends to meet locational requirements, it is recommended that the particular area of the bus section be heated first, to make the metal somewhat soft and then to bend it gently while the metal is still hot. A more appropriate method will be to use a hydraulic bending machine which can exert pressure evenly and more gently to prevent cracks.

---

* Silver and copper do not make a chemical bonding with aluminium through the electrolytic process. Aluminium therefore cannot be silver coated directly. The recommended procedure is to first apply a Zn coating (1–2 microns), then a coating of Cu (1–2 microns) and then a coating of Ag (13–15 microns).

Relevant Standards

IEC	*Title*	*IS*	*BS*	*ISO*
–	Torsional test and minimum torques for bolts and screws with nominal diameters 1 mm to 10 mm	1367-20/1996	BS EN 20898-7/1995	898-7/1992
–	Specification for spring washers for general engineering and automobile purposes. Metric series	3063/1994	BS 4464/1998	–
–	Plain washers	2016/1996		

Relevant German Standards

DIN 6796/1987	For conical spring washers for bolt/nut assemblies

Notes

1 In the tables of Relevant Standards in this book while the latest editions of the Standards are provided, it is possible that revised editions have become available. With the advances of technology and/or its application, the updating of standards is a continuous process by different Standards organizations. It is therefore advisable that for more authentic references, readers should consult the relevant organizations for the latest version of a Standard.

2 Some of the BS or IS Standards mentioned against IEC may not be identical.

3 The year noted against each Standard may also refer to the year of its last amendment and not necessarily the year of publication.

30

Properties and Ratings of Current-carrying Conductors

Contents

30.1 Properties and current ratings for aluminium and copper conductors

In Table 30.1 we provide the general properties of aluminium and copper conductors. The table also makes a general comparison between the two widely used metals for the purpose of carrying current.

30.1.1 Important definitions of properties of a metal

For ease of application of the above table we give below important definitions of the mechanical and electrical properties of a metal.

30.1.2 Physical and mechanical properties

1 **Specific heat** (This is a physical property)
The specific heat of a substance is the ratio of the heat required to raise the temperature of a certain weight by 1°C to that required to raise the temperature of the same weight of water by 1°C.

2 **Stresses**
This is the force per unit area expressed in kgf/mm^2 and is represented in a number of ways, depending upon the type of force applied, e.g.

- **Tensile stress:** the force that will stretch or lengthen the material and act at right angles to the area subjected to such a force.
- **Ultimate tensile strength:** the maximum stress value as obtained on a stress–strain curve (Figure 30.1).
- **Compressive stress:** the force that will compress or shorten the material and act at right angles to the area subjected to such a force.
- **Shearing stress:** the force that will shear the material and act in the plane of the area and at right angles to the tensile or compressive stress.
- **Modulus of elasticity (*E*):** the ratio of the unit stress to the unit strain within the proportional limits of a material in tension or compression. Refer to Figure 30.1.
  - **Proportional limit:** the point on the stress–strain curve at which will commence the deviation in the stress–strain relationship from a straight line to a parabolic curve (Figure 30.1).
- **Elastic limit:** the maximum stress a test specimen may be subjected to and which may return to its original length when the stress is released.
  - **Yield point:** a point on the stress–strain curve that defines the mechanical strength of a material under different stress conditions at which a sudden increase in strain occurs without a corresponding increase in the stress (Figure 30.1).
  - **Yield strength or tensile proof stress:** the maximum stress that can be applied without permanent deformation of the test specimen. For the materials that have an elastic limit (some materials may not have an elastic region) this may be expressed as the value of the stress on the stress–strain curve corresponding to a definite amount of permanent set (elongation) of, say, 0.1% or 0.2% of the test specimen.

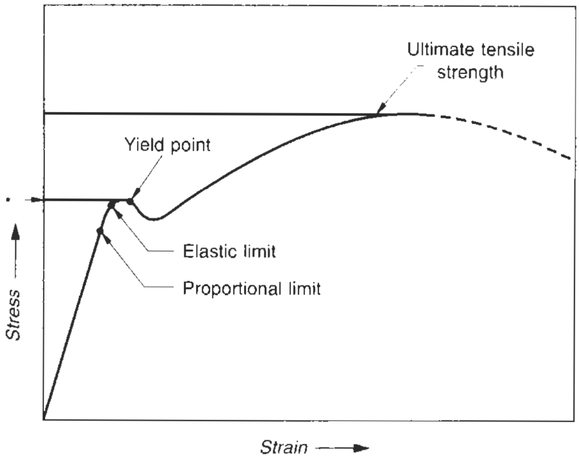

* Tensile proof strength = 0.6 to 0.8

Figure 30.1 Stress–strain curve

30.1.3 Electrical properties

Resistivity of metal of a current-carrying conductor

A metal being used for the purpose of current carrying must be checked for its conductivity. This is proportional to its current-carrying capacity. This will ascertain the correctness of size and grade of the metal chosen for a particular duty. It is necessary to avoid overheating of the conductor during continuous operation beyond the limits in Table 28.2. The electrical conductivity of a metal is reciprocal to its resistivity. The resistivity may be expressed in terms of the following units:

- Volume resistivity or specific resistance: this is the resistance of a conductor of unit length and unit cross-sectional area, i.e.

  $\frac{\Omega \cdot m^2}{m}$ or $\Omega \cdot m$ (or $\mu \cdot \Omega \cdot m$)

  and $1 \mu \cdot \Omega \cdot cm = 10^2 \frac{\Omega \cdot mm^2}{m}$
- Mass resistivity : this is the resistance of a conductor of unit length and unit mass;
  i.e. $\Omega \cdot gm/m^2$
  which is also equal to the volume resistivity multiplied by the density:

  i.e. $(\Omega \cdot m) \times (gm/m^3) = \Omega \cdot gm/m^2$
- Length resistivity: this is the resistance of a conductor per unit length, i.e. Ω/m.
- Conductivity

Therefore, the electrical conductivity with reference to say, volume conductivity, can be expressed by

$$\frac{\text{m}}{\Omega \cdot \text{m}^2}$$

or $\frac{1}{\Omega \cdot \text{m}}$ etc.

The resistivity and conductivity of standard annealed copper and a few recommended aluminium grades being used widely for electrical applications are given in Table 30.1. Their corresponding current-carrying capacities in per cent, with respect to a standard reference (say, 100% IACS) are also provided in the table.

30.1.4 Measuring the conductivity

For this purpose, a simple conductivity meter based on the principle of eddy current may be used for a direct reading of conductivity. The meter operates on the basis of relative variance, in the impedance of the test piece compared to the reference standard piece of aluminium or copper having a conductivity of 100% or 31.9 m/Ωmm^2 for aluminium and 58.0 m/Ωmm^2 for IACS (International Annealed Copper Standard) in terms of conductivity unit. The test probes, that sense the impedance of the test piece, induce an eddy current in the test piece at a fixed frequency. The magnitude of this current is directly proportional to the conductivity of the metal. This eddy current develops an electromagnetic field around the test piece and varies the impedance of the test probe (skin effect). The conductivity is thus determined by measuring the corresponding change in the impedance of the probe. Figure 30.2 shows a simple and portable conductivity meter.

30.2 Current-carrying capacity of copper and aluminium conductors

Earlier practice was to use copper in most applications in view of its rigidity and high conductivity. With the easier availability of aluminium and being more viable economically, aluminium is now preferred wherever possible. It is employed particularly where the metal has to simply carry power such as for the transmission and distribution of power at any voltage and as the main current-carrying conductor in power distribution or control equipment, such as a bus system or a switchgear assembly. Similarly, it is also used to feed high currents to an induction or a smelting furnace, electroplating plant or a rectifier plant. For main current-carrying components, however, as required for switching or interrupting devices (breakers, switches, fuses, contactors and relays) copper and copper alloys are preferred. The alloys are compact in size and are a much harder metal, suitable for making and breaking contacts frequently and yet retaining their shape and size over long years of operation. Copper is also used for low ratings, up to 100 A or so, required for the internal wiring of power and control circuits in a switchgear or a controlgear assembly, where the wires have to bend frequently. Aluminium, being brittle, is unsuitable for such applications. The use of copper is also recommended for areas that are more humid and chemically aggressive which may corrode aluminium quickly. As aluminium is highly oxidizing and a very susceptible metal to such environments it may loosen at the joints. Typical locations are mines, ships, textile mills and chemical and petrochemical processing units. But for such applications also, the latest practice is to instal electrical equipment and switchgears in separate rooms, away from the affected areas, thus making it possible to use aluminium. In the following text more emphasis is laid on the use of aluminium, as it is the preferred current-carrying metal;

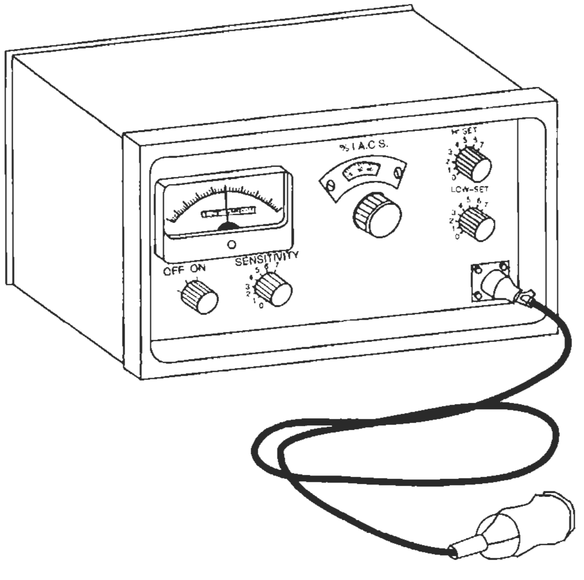

Figure 30.2 Conductivity meter (Courtesy: Technofour)

Below we give the recommended sizes and ratings:

- Copper wires/cables: refer to Table 13.15 for current ratings up to 100 A, as recommended for the internal wiring of a power switchgear or a controlgear assembly.
- Copper solid conductors: Tables 30.2 and 30.3 for general engineering purposes.
- Aluminium solid conductors: Tables 30.4, 30.5, 30.7, 30.8 and 30.9 for general engineering purposes.

The following factors must be taken into account while deciding on the most appropriate and economical sections of the metal conductors for the required current rating;

For the same thickness, a smaller cross-section will have a relatively higher heat-dissipating area compared to a larger cross-section. The latter therefore will have a higher deration compared to a smaller cross-section on account of poorer heat dissipation. This can be illustrated as follows.

Consider a 25.4 × 6.35 mm conductor with a cross-sectional area of 25.4 × 6.35 mm^2 and a surface area of 2 (25.4 + 6.35) × *l* (*l* being the length, in mm) = 63.5*l* mm^2.

A conductor with twice the width (i.e. 50.8 × 6.35 mm) will have a cross-sectional area of 50.8 × 6.35 mm^2, and a surface area of 2 (50.8 + 6.35) × *l* = 114.3*l* mm^2. Thus the larger section having twice the cross-sectional area in the same thickness will have 114.3/(2 × 63.5) or

Table 30.1 Selected properties (average) of copper and aluminium at 20°C

Parameters		*Standard copper* (IACS)^a	*Commercial purity aluminium (for electrical use)*		
			1	2	3
Relevant standards		IEC 60028	←	IEC 60105 ISO 209-1.2	→
Standard grades (a) As in BS (b) As in BS 2898 (ISO 209-1) (c) Equivalent Indal grades		 100% IACS – –	 EIE^c – M^b 1350 CIS – M^b	 HE9^c – WP^b 6063 A 50S – WP^b	 E – 91E^c 6101A D 50S – WP^b
Physical properties (a) Chemical composition					
	Copper (Cu) %		Cu, Si, Fe – Not more than 0.5%	0.1	0.05
	Magnesium (Mg) %			0.6–0.9	0.4–0.9
	Silicon (Si) %	99.9% pure	Mg, Cr, Sn, Zn and Mn ≃ **Nil**	0.3–0.6	0.3–0.7
	Iron (Fe) %			0.15–0.35	0.4
	Cr, T$_i$, Zn and Mn %			0.6	0.1
	Aluminium	–	99.5%	← Rest is all aluminium	→
Specific heat	gm.cal/°C	0.092	←	0.220	→
Density	(gm/cm^3)	8.89	2.71	2.70	2.71
Melting point	(°C)	1083	←	660	→
Mechanical properties					
Ultimate tensile strength	kgf/mm^2	22 to 26	6.5/7.0	15.5/23.5	20.5/25
Ultimate shearing strength	kgf/mm^2	16 to 19	5.5	16.5	15
Modulus of elasticity E	kgf/mm^2	12,000	7000	6700	6700
0.2% tensile-proof strength	kgf/mm^2	60–80% of the tensile strength	–	11/19.5	16.5/22
Electrical properties Volume resistivity or specific resistance (p)					
	(a) in $\mu \cdot \Omega \cdot$ cm.	1.7241	2.873	3.1/3.6	3.133
	(b) in $\frac{\Omega \cdot mm^2}{m}$	1.7241×10^{-2}	2.873×10^{-2}	$3.1 \times 10^{-2}/3.6 \times 10^{-2}$	3.133×10^{-2}

Parameters		*Standard copper* (IACS)[a]	*Commercial purity aluminium (for electrical use)*		
Volume conductivity	m/Ω·mm^2	58	34.80	32.26/27.8	31.90
Conductivity	% IACS*	100	61/60	50/48	55
Temperature coefficient of electrical resistance per °Cα_{20} (applicable over a working range of 100–200°C) α_{20} at a particular conductivity = α_{20} at 100% conductivity × actual conductivity of the metal.		3.93×10^{-3}	$4.03 \times 10^{-3}/3.96 \times 10^{-3}$	$3.3 \times 10^{-3}/3.168 \times 10^{-3}$	3.63×10^{-3}
Coefficient of linear expansion (thermal), (mm/°C) (applicable over a working range of 20–200°C)		1.73×10^{-5}	2.3×10^{-5}	2.3×10^{-5}	2.3×10^{-5}
Mass resistivity = volume resistivity × density (μ·Ω·gm/cm^2)		15.328	7.786	8.37/9.72	8.49

Notes

When using the above metals for the purpose of current carrying, their mechanical suitability must be checked with the data provided above to withstand, without permanent deformation, the electrodynamic forces that may develop during a short-circuit condition (Section 28.4.2).

For important definitions, refer to Section 30.1.1.

These values are based on the mean values of a number of tests carried out on specimens of standard copper and aluminium conductors.

[a] IACS – International Annealed Copper Standard

[b] Suffix M (now F) or WP (now T_6) represent the type of tempering.

[c] EIE, HE9 and E91E are old designations. They have now been replaced by 1350, 6063 A and 6101 A respectively.

Table 30.2 Current ratings for single rectangular copper sections

Conductor size (mm)	*Area of cross-section (mm^2)*	*Approximate rating Amp (a.c.)*
2.5 × 12.5	31.25	159
16.0	40.0	195
20.0	50.0	235
25.0	62.5	287
31.5	78.75	347
40.0	100.0	426
50.0	125.0	516
63.0	157.5	630
4 × 16.0	64	254
20.0	80	305
25.0	100	367
31.5	125	445
40.0	160	542
50.0	200	660
63.0	252	802
80.0	320	900
100.0	400	1185
6.3 × 25.0	157.50	473
31.5	198.45	569
40.0	252.0	693
50.0	315.0	832
63.0	396.9	1010
80.0	504.0	1220
100.0	630.0	1465
125.0	787.5	1755
160.0	1008.0	2145
10 × 50.0	500	1060
63.0	630	1260
80.0	800	1525
100.0	1000	1800
125.0	1250	2150
160.0	1600	2620
200.0	2000	3140
250.0	2500	3710
16 × 100.0	1600	2220
125.0	2000	2640
160.0	2560	3180
200.0	3200	3760
250.0	4000	4500
315.0	5040	5370

Source The Copper Development Association and the *Electrical Review.*

Notes

1 The ratings are based on a 50°C rise over 35°C ambient temperature in still but unconfined air.

2 AC ratings are based on spacings at which the proximity effect is considered almost negligible (≥ 300 mm Section 28.8).

3 These are the basic maximum ratings, that a current-carrying conductor can carry under ideal operating conditions. The rating is influenced by the service conditions and other design considerations, as discussed in Section 28.5. Apply suitable derating factors to arrive at the actual current ratings of these conductors under actual operating conditions.

4 Ratings may be improved by approximately 20% if the busbars are painted black with a non-metallic matt finish paint. This is because heat dissipation through a surface depends upon temperature, type of surface and colour. A rough surface will dissipate heat more readily than a smooth surface and a black body more quickly than a normal surface. Also refer to Section 31.4.4 and Table 31.1.

5 The above ratings are for single bars. When multiple bars are used, apply the multiplying factors, as recommended in Table 30.3. These factors will account for the restricted heat dissipation and additional skin effect due to the larger number of bars.

Table 30.3 Multiplying factors for copper sections

Total area of cross-section (mm^2)	*Multiplying factors*		
	2 bars	*3 bars*	*4 bars*
500	1.78	2.45	3.13
1000	1.72	2.36	3.00
1500	1.65	2.24	2.84
2000	1.60	2.16	2.70
2500	1.55	2.10	2.60
3000	1.52	2.02	2.52
3500	1.48	1.98	2.48
4000	1.44	1.96	2.45

Source The Copper Development Association and the *Electrical Review.*

Note

The space between the bars is considered to be equal to the thickness of the bars.

only 90% surface area compared to the smaller section, and consequently less heat dissipation in the same ratio and will require a higher derating.

Corollary

1 Thinner sections will have a relatively higher surface area to dissipate heat compared to thicker sections. The thinner the section, the better will be metal utilization and vice versa.

2 More bars will reduce the heat dissipation further and will require yet higher deratings.

3 Skin effect – the same theory is usually true for the skin effect. The thinner the surface, the smaller will be the nucleus resulting in a higher concentration of current at the surface and better utilization of metal.

We can derive the same inference from Tables 30.2, 30.4 and 30.5, specifying current ratings for different cross-sections. The current-carrying capacity varies with the cross-section not in a linear but in an inconsistent way depending upon the cross-section and the number of conductors used in parallel. It is not possible to define accurately the current rating of a conductor through a mathematical expression. This can be established only by laboratory tests.

Mechanical and electrical data for important rectangular, circular and channel sections are also provided in Tables 30.7, 30.8 and 30.9 respectively for reference. For more details contact the manufacturer.

Table 30.4 Current ratings for rectangular aluminium sections, grade E91-E (6101 A)

Size mm	*D.C.*	*1 bar 50 Hz A.C.*	*D.C.*	*2 bars 50 Hz A.C.*	*D.C.*	*3 bars 50 Hz A.C.*	*D.C.*	*4 bars 50 Hz A.C.*
	Approximate ratings (A)							
25.4 × 6.35	355	355	710	705	980	970	1120	1100
38.1 × 6.35	520	520	1030	1020	1380	1350	1585	1535
50.8 × 6.35	670	670	1315	1290	1765	1705	2050	1940
63.5 × 6.35	820	810	1550	1510	2100	2000	2430	2260
76.2 × 6.35	970	960	1805	1740	2440	2310	2860	2620
101.6 × 6.35	1260	1235	2260	2140	3060	2800	3640	3200
127.0 × 6.35	1545	1505	2700	2510	3660	3240	4410	3700
152.4 × 6.35	1840	1780	3130	2860	4290	3680	5250	4240
50.8 × 9.53	840	830	1560	1500	2090	1970	2460	2260
76.2 × 9.53	1210	1180	2180	2050	2940	2660	3510	3030
101.6 × 9.53	1550	1495	2710	2480	3660	3150	4400	3560
127.0 × 9.53	1940	1860	3290	2930	4450	3660	5400	4200
152.4 × 9.53	2260	2120	3770	3340	5140	4080	6300	4680
203.2 × 9.53	2940	2750	4800	4150	6500	4900	8060	5740
76.2 × 12.7	1405	1355	2450	2240	3290	2830	4000	3240
101.6 × 12.7	1830	1740	3100	2720	4170	3360	5100	3900
127.0 × 12.7	2230	2080	3720	3120	5040	3900	6170	4550
152.4 × 12.7	2620	2420	4300	3500	5850	4400	7200	5100
203.2 × 12.7	3380	3060	5450	4450	7420	5300	9110	6150
254.0 × 12.7	4080	3640	6500	5000	8860	6000	10900	6850

Source Indalco

Notes

1 The ratings are indicative and based on a 50°C rise over 35°C ambient temperature in still but unconfined air.

2 For a multiple-bar arrangement, the space between the bars is considered to be equal to the thickness of the bar.

3 A.C. ratings are based on spacings, at which the proximity effect is considered almost negligible (≥ 300 mm, Section 28.8).

4 These are the basic maximum ratings that a current-carrying conductor can carry under ideal operating conditions. They are influenced by the service conditions and other design considerations, as discussed in Section 28.5. Apply suitable derating factors to arrive at the actual current ratings of these conductors under actual operating conditions.

5 Ratings may be improved approximately by 20% if the busbars are painted black with a non-metallic matt finish paint. This is because the heat dissipation through a surface depends upon its temperature, type of surface and colour. A rough surface dissipates heat more readily than a smooth surface and a black body more quickly than a normal surface. See also Section 31.4.4 and Table 31.1.

6 Other grades as in BS 1474 and BS 2898, for electrical purposes, and as produced by the leading manufacturers, are provided in Table 30.6.

7 To obtain the current rating for any other grade of busbar, multiply the above figures by the appropriate factor defined in Table 30.6.

Table 30.5 Current ratings for rectangular aluminium sections, Grade EIE-M (1350)

Conductor size (mm)	*Cross-sectional area (mm^2)*	*1 bar*	*2 bars*	*3 bars*	*4 bars*	*5 bars*	*6 bars*
		Approximate ratings (A)					
2.5 × 12	30	118	210	285	360	425	480
16	40	151	275	395	490	580	655
20	50	183	320	450	575	675	770
25	62.5	223	390	540	685	800	910
30	75	263	480	660	840	990	1115
40	100	342	610	860	1080	1260	1425
4 × 12	48	156	290	420	536	620	700
16	64	198	340	470	600	710	815
20	80	238	410	570	720	850	955
25	100	290	530	755	950	1110	1250
30	120	339	600	845	1060	1245	1400
40	160	434	750	1050	1320	1550	1750
50	200	532	905	1260	1575	1825	2035
6 × 12	72	200	350	480	610	720	825
16	96	252	450	640	805	960	1075

Conductor size (mm)	*Cross-sectional area (mm^2)*	*1 bar*	*2 bars*	*3 bars*	*4 bars*	*5 bars*	*6 bars*
		Approximate ratings (A)					
6 × 20	120	301	550	790	1000	1170	1320
25	150	364	640	900	1120	1315	1485
30	180	424	730	1025	1290	1520	1720
40	240	545	935	1310	1630	1900	2130
50	300	660	1130	1580	1950	2255	2505
60	360	782	1350	1870	2200	2630	2885
80	480	995	1700	2310	2745	3070	3330
100	600	1215	2090	2770	3190	3490	3745
120	720	1415	2415	3180	3640	3985	4270
160	960	1830	3100	4050	4600	5025	5340
10 × 40	400	720	1230	1710	2110	2425	2670
50	500	870	1500	2060	2505	2850	3100
60	600	1015	1750	2350	2795	3120	3380
80	800	1250	2215	2940	3355	3675	3950
100	1000	1565	2650	3465	3940	4315	4635
120	1200	1810	3050	4010	4560	4980	5290
160	1600	2310	3940	5170	5870	6300	6620
200	2000	2795	4750	6160	–	–	–
250	2500	3365	5720	–	–	–	–
16 × 100	1600	1950	3260	4250	4890	5340	5660
120	1920	2255	3850	5030	5700	6130	6450
160	2560	2840	4830	6260	–	–	–
200	3200	3395	5780	–	–	–	–
250	4000	4095	6500	–	–	–	–

Source The Aluminium Federation

Notes

1 Current ratings for E-91E (6101 A) bars are about 3% lower than EIE-M (1350); refer to Table 30.6.

2 The ratings are indicative and based on a 50°C rise over 35°C ambient temperature in still but unconfined air.

3 For a multiple-bar arrangement the space between the bars is considered to be equal to the thickness of the bar.

4 AC ratings are based on spacings at which the proximity effect is considered almost negligible (≥ 300 mm, Section 28.8).

5 These are the basic maximum ratings that a current-carrying conductor can carry under ideal operating conditions. They are influenced by the service conditions and other design considerations, as discussed in Section 28.5. Apply suitable derating factors to arrive at the actual current ratings of these conductors under actual operating conditions.

6 Ratings may be improved approximately by 20% if the busbars are painted black with a non-metallic matt finish paint. This is because, the heat dissipation through a surface depends upon its temperature, type of surface and colour. A rough surface dissipates heat more readily than a smooth surface and a black body more quickly than a normal body. See also Section 31.4.4 and Table 31.1.

7 Other grades as BS 1474 and BS 2898, for electrical purposes, and as produced by the leading manufacturers, are provided in Table 30.6.

8 To obtain the current rating for any other grade of busbar, multiply the above figures by the appropriate factor defined in Table 30.6.

Table 30.6 Grades of aluminium alloys for electrical purposes

Grades as the old designation	*Grades as in BS 2898 (ISO 209-1)*	*Equivalent grades of Indian Aluminium (Indal) alloys*	*Multiplying factor to ratings of Table 30.4*
EIE–M	1350	CIS–M	1.03
EIC–M	–	2 S–M	1.02
E–91E	6101 A	D 50 S–WP	1.00
HE–9–WP	6063 A	50 S–WP	0.94

Notes

1 Aluminium conductors for engineering application are produced in commercial grade quality, having an electrical conductivity varying from 70% to 94% (approx.) as well as electrical grade quality having an electrical conductivity of 94% and higher, as noted above, varying slightly from manufacturer to manufacturer. Commercial grade, not below HE–9–WP (6063A), can be used for current carrying, say, up to 1000 A, although electrical grade is preferred. For higher currents, however, electrical grade only should be preferred.

2 When the short-circuit forces are likely to be high, say, 1500 kgf or more, per metre run, such as on a main power circuit the electrolytic grade aluminium of type EIE–M (1350) may not be recommended. It is a soft metal mechanically, as noted in Table 30.1, which will require busbar supports at very close spacing, defeating the economics of the selection. The grade type E-91E (6101 A), which has a better mechanical strength, would be a better choice for all types of power applications. The selection of busbars, shape and grade, is thus governed by mechanical considerations and economics, rather than the purity of the alloy alone.

Table 30.7 Indal cis - M and D 50 S - WP rectangular busbars equivalent to EIE - M (1350) and E - 91E (6101 A) as in BS 1474 and BS 2898 (mechanical and electrical data)

Size	*Cross-sectional area*	*Weight*	*CISM d.c. resistance (max.) at 20°C*	*D 50 SWP d.c. resistance (max.) at 20°C*	*Reactance X_a at 305 mm spacing at 50 Hz*	*Moment of inertia* 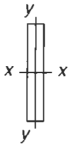		*Section modulus*		*Radius of gyration*	
mm	*mm^2*	*kg/m*	*μΩ/m*	*μΩ/m*	*μΩ/m*		*(cm^4)*	*(cm^3)*	*(cm^3)*	*(cm)*	*(cm)*
						Ix–x	*Iy–y*	*Zx–x*	*Zy–y*	*Kx–x*	*Ky–y*
25.4 × 6.35	161.29	0.435	178.15	194.35	236.22	0.874	0.012	0.688	0.131	0.734	0.183
38.1 × 6.35	241.30	0.652	118.76	129.56	215.22	2.914	0.033	1.540	0.262	1.102	0.183
50.8 × 6.35	322.58	0.871	89.07	97.18	199.14	6.951	0.125	2.737	0.393	1.468	0.183
63.5 × 6.35	403.23	1.089	71.26	77.82	186.35	13.569	0.125	4.261	0.426	1.836	0.183
76.2 × 6.35	483.87	1.306	59.38	64.80	175.85	23.434	0.166	6.145	0.508	2.202	0.183
101.6 × 6.35	645.16	1.742	44.55	48.59	159.45	55.484	0.208	10.930	0.688	2.936	0.183
127.0 × 6.35	806.45	2.177	35.63	38.88	146.00	108.387	0.291	17.075	0.852	3.670	0.183
152.4 × 6.35	967.74	2.613	29.69	32.38	134.51	187.304	0.333	24.581	1.032	4.404	0.183
50.8 × 9.53	484.12	1.307	59.38	64.80	195.86	10.406	0.374	4.097	0.787	1.466	0.274
76.2 × 9.53	726.19	1.961	39.60	43.18	174.21	35.130	0.541	9.226	1.147	2.202	0.274
101.6 × 9.53	968.25	2.614	29.69	32.38	157.48	83.246	0.749	16.387	1.540	2.936	0.274
127.0 × 9.53	1210.31	3.268	23.75	26.21	144.36	162.580	0.916	25.613	1.917	3.670	0.274
152.4 × 9.53	1452.37	3.921	19.82	21.59	134.18	280.956	1.082	36.871	2.311	4.404	0.274
203.2 × 9.53	1936.50	5.228	14.83	16.21	117.45	665.970	1.457	65.548	3.064	5.872	0.274
76.2 × 12.70	967.74	2.613	29.69	32.38	170.93	46.826	1.290	12.290	2.048	2.202	0.368
101.6 × 12.70	1290.32	3.848	22.28	24.28	155.84	111.009	1.748	21.844	2.737	2.936	0.368
127.0 × 12.70	1612.90	4.355	17.81	19.42	143.04	216.773	2.164	34.134	3.409	3.670	0.368
152.4 × 12.70	1935.48	5.226	14.83	16.21	132.54	374.608	2.622	49.161	4.097	4.404	0.368
203.2 × 12.70	2580.64	6.968	11.12	12.14	115.81	887.822	3.455	87.376	5.441	5.872	0.368
254.0 × 12.70	3225.80	8.710	8.89	9.71	96.78	1734.436	4.329	136.570	6.817	7.341	0.368

Source: Indalco

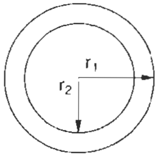

Table 30.8 Indal D50S WP tubular busbars (mechanical and electrical data and current rating)

Pipe nominal size IPS	*Nominal diameter*		*Wall thickness*	*Area*	*Nominal weight*	*Moment of inertia*	*Section modulus*	*Radius of gyration*	*G.M.D. Ds.*	*D.C. resistance (max.) at 20°C*	*Reactance X_a at 300 mm spacing at 50 Hz*	*Current rating at 50 Hz (Amps)*	
	Outside	*Inside*										*Indoors*	*Outdoors*
in.	*mm*	*mm*	*mm*	*mm²*	*kg/m*	*cm⁴*	*cm³*	*cm*	*cm*	*μΩ/m*	*μΩ/m*		
(standard iron pipe sizes)													
1	33.40	26.64	3.38	319	0.861	3.634	0.857	1.068	1.560	98.1	186.7	675	815
$1^1/_4$	42.16	35.04	3.56	432	1.166	8.104	3.844	1.371	1.991	72.7	171.3	845	1010
$1^1/_2$	48.26	40.90	3.68	515	1.392	12.899	5.345	1.581	2.291	60.7	162.7	960	1160
2	60.33	52.51	3.91	693	1.871	27.709	9.186	1.999	2.878	45.1	148.3	1245	1440
$2^1/_2$	73.03	62.71	5.16	1100	2.970	63.683	17.451	2.406	3.475	28.4	136.2	1720	1950
3	88.90	77.92	5.49	1439	3.884	125.606	28.258	2.957	4.267	21.8	123.7	2130	2350
$3^1/_2$	101.60	90.12	5.74	1729	4.667	199.279	39.227	3.396	4.877	17.4	115.2	2510	2750
4	114.30	102.26	6.02	2048	5.529	301.039	52.675	3.835	5.514	15.3	107.6	2800	3050
$4^1/_2$	127.00	114.46	6.27	2379	6.423	434.683	68.454	4.275	6.160	13.2	100.1	3160	3420
5	141.30	128.20	6.55	2724	7.490	631.007	89.326	4.770	6.853	11.3	93.8	3550	3810
(extra-heavy iron pipe sizes)													
1	33.40	24.30	4.55	412	1.113	4.395	2.632	1.033	1.521	76.0	188.3	745	925
$1^1/_4$	42.16	32.46	4.85	568	1.535	10.064	4.774	1.330	1.951	55.1	172.6	975	1170
$1^1/_2$	48.26	38.10	5.08	689	1.861	16.283	6.748	1.537	2.245	45.4	164.0	1125	1335
2	60.33	49.25	5.54	954	2.575	36.125	11.977	1.947	2.835	32.9	149.3	1465	1680
$2^1/_2$	73.03	59.01	7.01	1454	3.926	80.183	21.954	2.347	3.414	21.5	137.1	1955	2230
3	88.90	73.66	7.62	1946	5.254	162.093	36.466	2.885	4.178	16.1	124.7	2470	2700
$3^1/_2$	101.60	85.44	8.08	2374	6.410	261.393	51.455	3.320	4.801	13.2	116.1	2850	3160
4	114.30	97.18	8.56	2844	7.678	399.998	69.989	3.752	5.431	11.0	108.3	3260	3590
$4^1/_2$	127.00	108.96	9.02	3343	9.027	584.938	92.115	4.183	6.045	9.4	100.7	3700	4040
5	141.30	122.24	9.53	3947	10.656	860.350	121.772	4.671	6.746	8.0	94.5	4190	4550

Source: Indalco

Note These data are indicative and provided for typical standard sizes from a manufacturer. Busbars larger than the above are generally not manufactured in tubular sections but in sections and configurations that are convenient by extrusion (Figure 31.15). By welding such sections, one can form any desired size of tubular or any other conductor shape (hexagonal or octagonal). Such large sections are required for isolated phase bus (IPB) systems, discussed in Chapter 31.

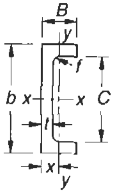

Table 30.9 Channel busbar: mechanical and electrical data and current ratings (Grade E – 91E)

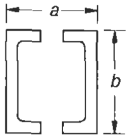

					One channel										Two channels				
Size	*Web and flange thickness*	*Flange width*	*Inner flat surface*	*Fillet radius*	*Section area*	*Weight*	*Moment of inertia*		*Section modulus*		*Radius of gyration*		*Distance to neutral axis x*	*D.C. Resistance (max.) at 20°C*	*Depth*	*Width*	*Reactance at 305 mm spacing at 50 Hz*	*D.C. current rating*	*A.C. current rating at 50 Hz*
mm	*mm*	*mm*	*mm*	*mm*	*mm*^{2}	*kg/m*	*cm*^{4}		*cm*^{3}		*cm*		*mm*	*μΩ/m*	*mm*	*mm*	*μΩ/m*	*Amps*	*Amps*
b	*t*	*B*	*C*	*f*			$Ix - x$	$Iy - y$	$Zx - x$	$Zy - y$	$Kx - x$	$Ky - y$			*b*	*a*	X_a		
76.2	6.35	38.10	45.08	7.62	1013	2.735	77.42	12.07	20.48	4.59	2.84	1.12	11.9	33.07	76.2	100.0	114.83	3380	3340
101.6	6.68	41.83	69.20	9.52	1187	3.205	171.07	17.07	33.76	5.74	3.78	1.19	11.7	26.41	101.6	106.4	106.96	4250	4190
127.0	8.00	48.00	92.00	9.50	1695	4.576	375.44	31.63	59.16	9.18	4.70	1.37	13.2	18.41	127.0	127.0	92.52	5540	5440
152.4	8.10	51.66	113.98	11.11	1993	5.381	629.34	42.04	82.59	10.98	5.61	1.45	13.5	15.72	152.4	152.4	80.38	6500	6340
177.8	9.98	58.40	135.62	11.11	2794	7.544	1179.18	74.09	132.74	17.21	6.50	1.63	15.2	11.23	177.8	177.8	70.54	8200	7800
203.2	11.84	65.00	154.12	12.70	3734	10.082	2033.29	120.29	200.09	25.07	7.39	1.78	17.0	8.40	203.2	203.2	62.99	9850	9150
254.0	13.18	92.07	199.06	14.29	5515	14.89	4924.43	400.41	387.72	56.70	9.45	2.64	24.1	5.68	254.0	254.0	48.56	12800	11450

Source: Indalco

Relevant Standards

IEC	*Title*	*IS*	*BS*	*ISO*
60028/1925	International standard of resistance for copper	–	–	–
60105/1958	Recommendation for commercial purity aluminium busbar material	–	–	–
–	Specification for wrought aluminium and aluminium alloys for engineering purposes: bars, extruded round tubes and sections	733/1991	BS 1474/1987	6362, 209–1, 2
–	Specification for wrought aluminium and aluminium alloys for electrical purposes: bars, extruded round tube and sections	5082/1998	BS 2898/1985	209–1, 2
–	Aluminium and aluminium alloys. Extruded rod/bar, tube and profiles	1285/1991	BS EN 755 8 parts	–
–	Copper for electrical purposes. Rod and bar	4171/1988	BS 1433/1970	–

Notes

1 In the tables of Relevant Standards in this book while the latest editions of the Standards are provided, it is possible that revised editions have become available. With the advances of technology and/or its application, the updating of Standards is a continuous process by different Standards organizations. It is therefore advisable that for more authentic references, readers should consult the relevant organizations for the latest version of a Standard.

2 Some of the BS or IS standards mentioned against IEC may not be identical.

3 The year noted against each standard may also refer to the year of its last amendment and not necessarily the year of publication.

Further reading

1 Alcoa, *Aluminium Bus Conductor Hand Book.*
2 British Aluminium Co. Ltd, *Aluminium Busbars*, Pub. No. L4.
3 British Aluminium Co. Ltd. *Aluminium for busbars, earthing and lightning conductors*, Pub. No. M4.
4 Copper Development Association, *Copper Busbar*, Pub. No. 22.47.
5 Dwight, H.B., *Electrical Coils and Conductors*, McGraw-Hill, New York (1945).
6 Indian Aluminium Co., *Indal Aluminium Busbar* (Collaborators Alcan, Canada).

31

An Isolated Phase Bus System

Contents

31.1 An isolated phase bus (IPB) system

In this construction the conductors of each phase are housed in a separate non-magnetic metallic enclosure to isolate them completely from each other with the following advantages:

1 It eliminates phase-to-phase faults.
2 It eliminates the proximity effect (extra forces and heating) by providing a magnetic shielding to the supporting and metallic structures in the vicinity.
3 It reduces the proximity effects between the main current-carrying conductors of the adjacent phases to almost zero due to magnetic shielding, on the one hand, and large centre spacing, on the other.
4 It provides complete protection for operating personnel from high touch or step voltages (for details on contact voltages, see Section 22.9) across the enclosure and the metallic structures caused by parasitic (electromagnetic) currents.
5 The bus system is are easy to handle, bend and install.

This is used for HT systems of very large ratings. Since it is a more expensive arrangement it is normally preferred only for critical installations such as a power generating station, where it has to carry large to very large currents due to high ratings of the generating units. In a thermal power plant it is used between the generating unit (G) and the generator transformer (GT) and the unit auxiliary transformers (UATs) as well as sometimes between the UAT and the unit HT switchgear as illustrated in Figure 13.21 (redrawn in Figure 31.1 for more clarity). A typical layout of such a bus system in a thermal power plant is illustrated in Figure 31.2(a) and (b). It may comprise the following sections.

31.1.1 Main run and auxiliary feed lines

1 From generator phase terminals to the lower voltage side of the GT. This section may partly be indoors, connecting the generator inside the turbine room and partly outdoors, connecting the GT in the transformer yard.
2 A generator neutral bus to form the generator star point.
3 Tap-offs with tee joints from the main run to the two UATs.
4 Sometimes from UAT secondaries to the unit HT switchgears.
5 If the GT is made of three, single-phase transformers, an interconnecting IPB will be required to form the delta as illustrated in Figure 31.2(b).

31.1.2 Instrumentation and protection connections

Since an IPB forms an important integral part of a power-generating station, with it are associated a number of metering and protective devices such as CTs, VTs and generator grounding system. Below we identifiy interconnections that may be required to connect these CTs and VTs while installing an IPB system.

1 Removable links for easy mounting and maintenance of CTs for metering and protection, typically as follows. For each phase in the main lines between the generator and the GT,
   - 1 CT for metering

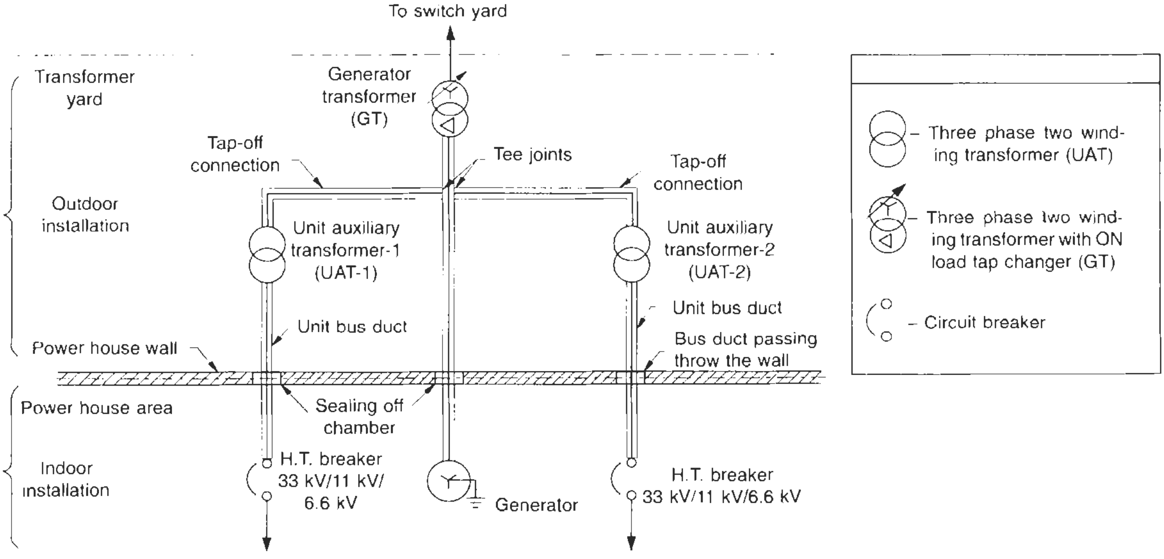

Figure 31.1 Application of an IPB

- 1 CT for protection
- 1 CT for AVR (automatic voltage regulator)
- 1 CT for differential protection

For each phase on the neutral side, 1 CT for differential protection, two sets of three CTs each for metering, in the tap-offs for the two UATs and two sets of three CTs each for protection in the tap-offs for the two UATs.

2 Tap-offs with a neutral CT, from star point of the generator, to the neutral grounding transformer (NGT).

3 VTs and surge protection tap-offs for each phase from the main run, for metering and surge protection.

Any other connections, that may be necessary at site or additional CTs for protection.

31.1.3 Shorting of phase enclosures

For continuous enclosure IPBs, the following ends of the enclosures are shorted to ensure continuous flow of induced currents:

- At the generator end, as near to the generator terminals as possible.
- GT ends, as near to the transformer flanges as possible.
- UAT ends.
- Both sides of the neoprene or EPDM rubber or metallic expansion bellows.
- Near the generator neutral terminal.
- Any other section, where it is felt that it is not properly bonded and the induced currents may not have a continuous path.

The enclosure, however, should be insulated at all such locations, where the IPB terminates with another equipment, such as at the generator, GT, UATs, VTs, and the NGT to avoid longitudinal currents through such equipment. These equipments are grounded separately.

31.2 Constructional features

As discussed later, the enclosure of an IPB may carry induced currents up to 95% of the current through the main conductors. Accordingly, the enclosure is designed to carry longitudinal parasitic currents up to 90–95% of the rated current of the main busbars. The cross-sectional area of the enclosure is therefore maintained almost equal to and even more than the main conductors to account for the dissipation of heat of the main conductors through the enclosure only, unless an additional forced cooling system is also adopted. The outdoors part of the enclosure exposed to atmospheric conditions is also subjected to solar radiation. Provision must be made to dissipate this additional heat, from the enclosure.

The main bus and its enclosure is normally in a tubular form, in view of the advantages of a tubular section, as discussed already (concentration of current in the annulus,

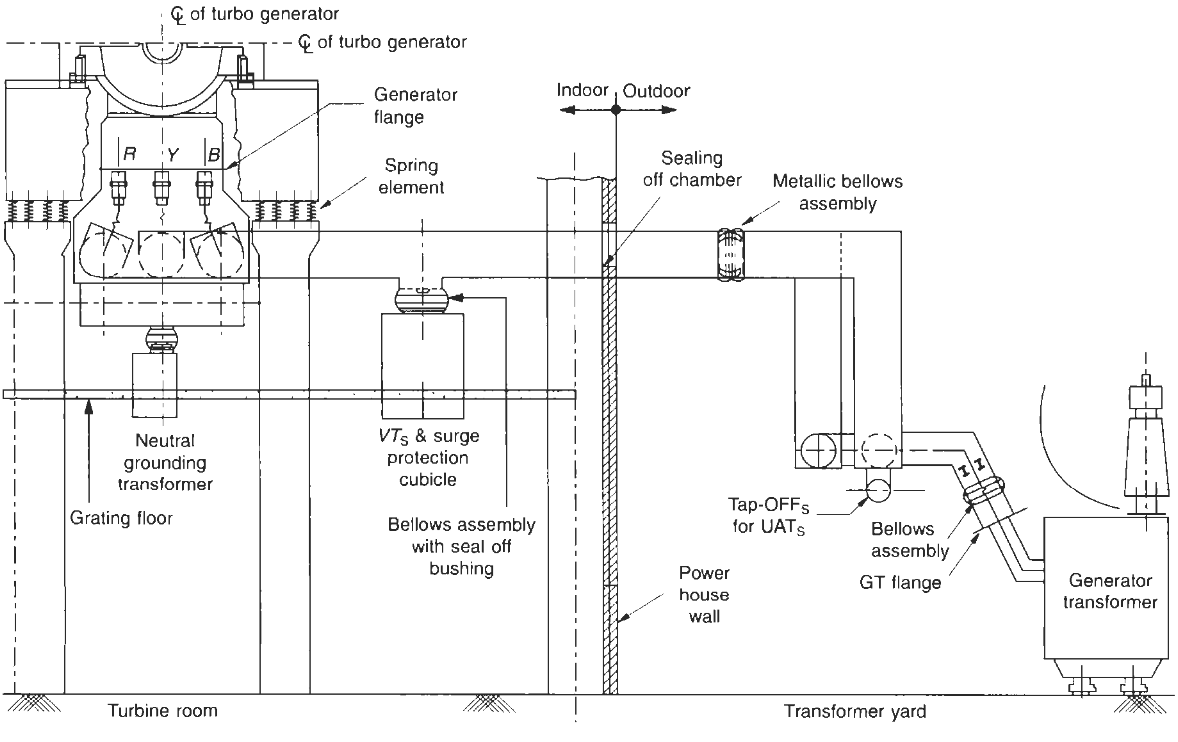

Figure 31.2(a) Layout of 24 kV, 20 kA isolated phase bus duct from generator to generator transformer for NTPC

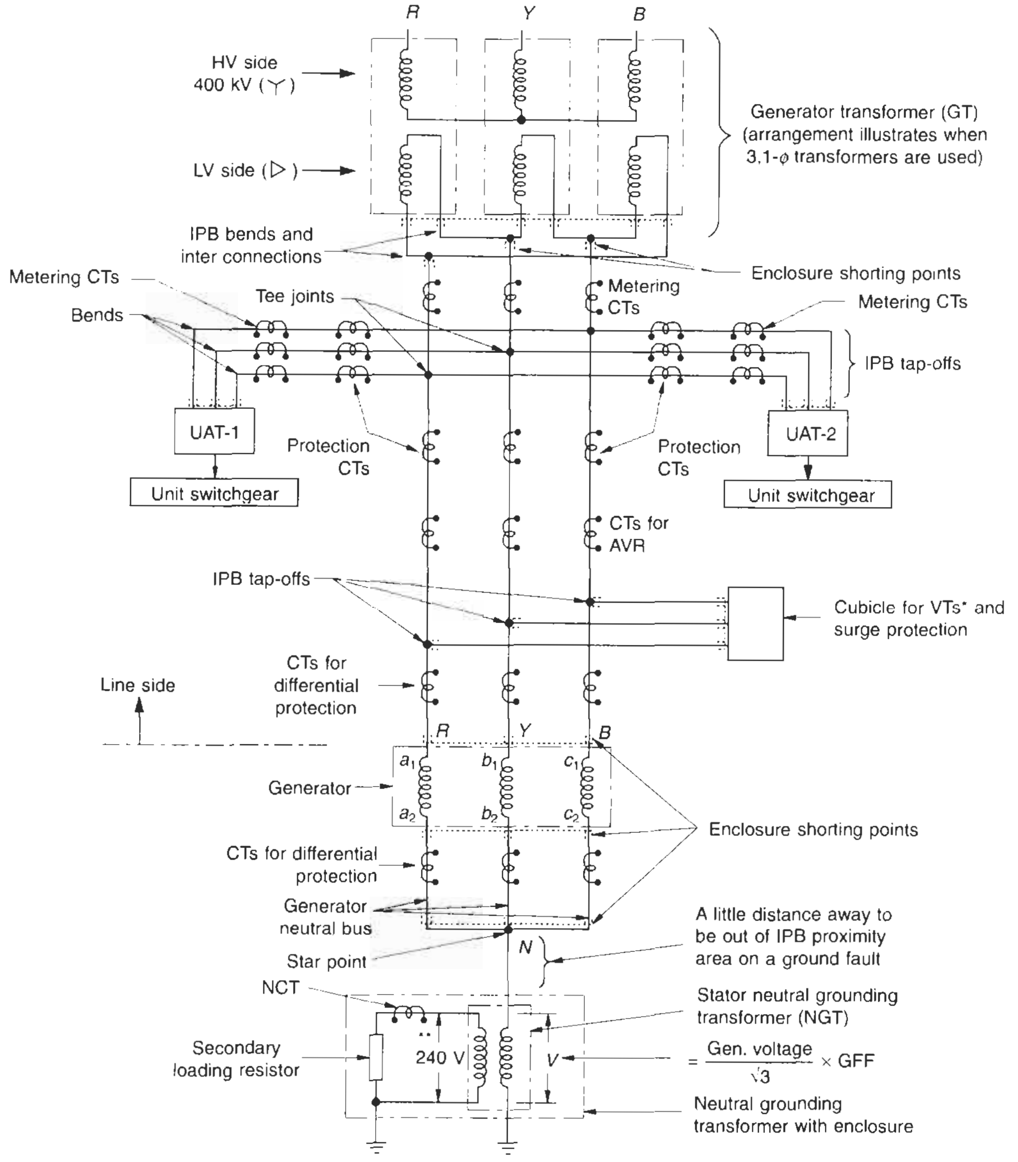

*It may be supplemented with a surge capacitor, to suppress the steepness of a t.r.v. and diminish its r.r.r.v, (Section 17.10.1)
**Typical

Figure 31.2(b) Typical layout of an IPB system in a thermal power station, illustrating enclosure end shortings for continuous enclosures

Section 28.7). One more advantage of a tubular section is that it exerts equal forces at all points of the enclosure and relieves it and the conductor from any undue stresses. Octagonal and hexagonal sections are also used as they also have near-symmetry.

- **Insulating medium:** Dry air or SF_6 gas
- **Insulators:** The conductors are resilient mounted on post insulators, to hold them in the centre (Figure 31.3) and dampen the forces, during normal operation or on fault. The conductors are held in position to have free movement axially but they have almost no movement radially. The thermal effects of the conductors are taken care of by the expansion joints (Figure 31.4(a)) and those of the enclosure by the bellows (Figure 31.4(b) and (c)).
- **Nominal current ratings:** Some typical current ratings for the stator voltages considered in Table 13.8 are 10 000 A for a 250 MVA generator to 40 000 A for a 1000 MVA generator. (See item 3 of the table for the normal current ratings for different MVA ratings and stator voltages of generators.) The preferred ratings may follow series R-10 of IEC 60059 as in Section 13.4.1(4).

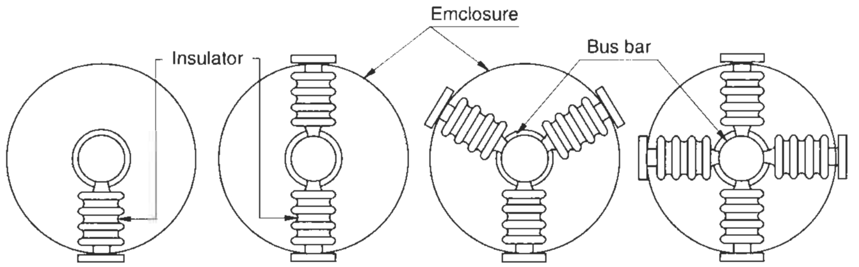

Figure 31.3 Arrangements of insulators to hold the busbars

- Types of enclosures: These may be of two types, i.e.
  Non-continuous, and
  Continuous.

31.2.1 Non-continuous or insulated enclosures

These were used until the early 1960s and have since been discontinued in view of the inherent advantages of a continuous enclosure. In non-continuous enclosures the individual sections that are added together to obtain the required length and configuration of the bus layout are electrically insulated from each other. They are also insulated from their mounting structures by rubber or fibre-glass or similar insulating pads, as illustrated in Figures 31.5(a) and (b). This is to prevent the longitudinal flow of current from one section of the bus system to the other as well as from one phase enclosure to the other. There is no external return path for the induced currents. But local induced currents do flow through each insulated section and may cause nominal step and touch voltages. Each section is grounded at one point (only) to its own separate ground bus which in turn is connected to the station ground bus at one point only to make the induced current flow in one direction only. The ground bus is of the continuous type. Layout of a non-continuous IPB with grounding arrangement is shown in Figure 31.6. This system of insulation and grounding minimizes the step and touch voltages (Section 22.9) across each section of the enclosure. The induced voltage across each section is kept as low as possible, preferably below 2 V, when operating at the rated current. The ground bus which may be of copper or aluminium (only of non-magnetic material and not of GI) for each phase is continuously running and capable of carrying the momentary peak current (Table 28.1) of the main bus system for two seconds as in ANSI C-37/20C.

Such an arrangement, although adequate in some respects, has some disadvantages as noted below:

(a) There are higher losses in the enclosure due to the higher proximity effect as the induced current is not continuous throughout the enclosure.

(b) It provides negative magnetic shielding to the outside metallic structures in the vicinity. Magnetic shielding is an extremely important requirement to minimize the eddy currents ($\propto B^2$) and hysteresis losses ($\propto B^{1.6}$) in all such metallic structures and to reduce the electrodynamic forces developed between them and the main bus conductors.

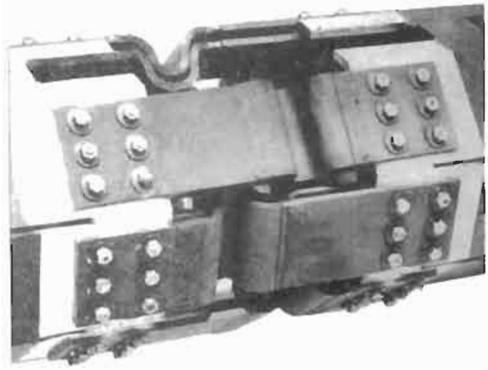

Figure 31.4(a) An expansion joint

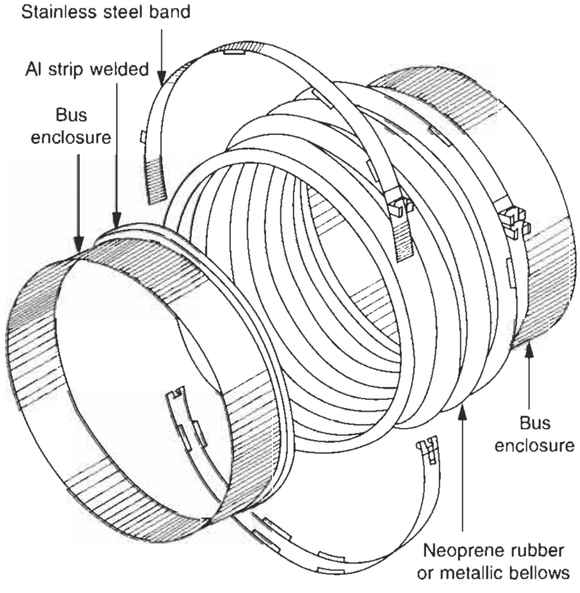

Figure 31.4(b) Rubber or metallic expansion bellows for enclosure jointing and end terminations (Courtesy: Best & Crompton)

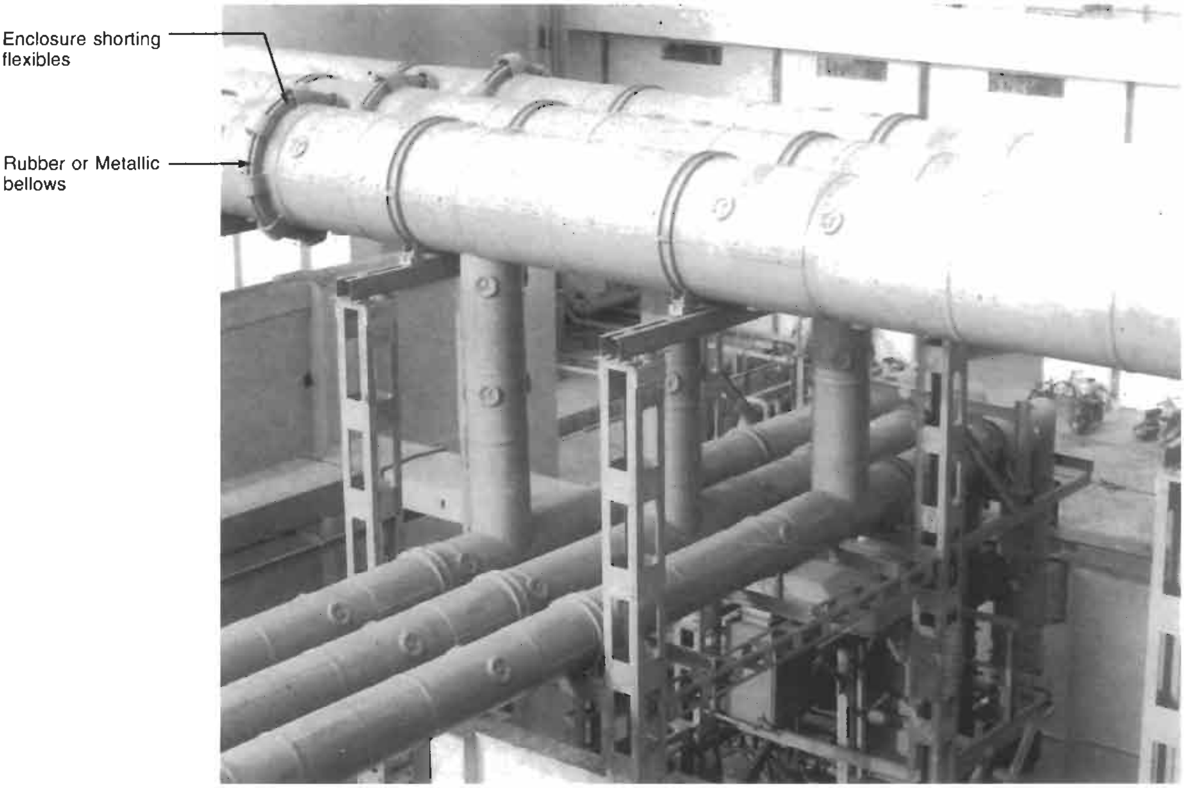

Figure 31.4(c) 24 kV, 20 kA, IPB straight run and tap-offs (Courtesy: Controls and Switchgears)

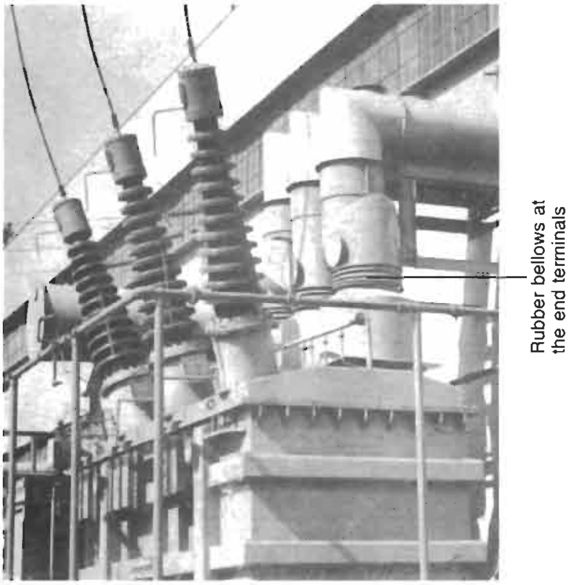

Figure 31.4(d) Termination of an isolated phase bus system at a transformer (Courtesy: Best and Crompton)

31.2.2 Continuous or bonded enclosures

The system is called electrically continuous when the individual sections (enclosures) of the IPB joined together to obtain the required length and configuration of the bus layout are also electrically bonded to each other. Each enclosure is then cross-connected with the enclosure of the other phases at the extreme ends of the installed bus duct. The bonding permits longitudinal flow of induced currents through the length of the enclosure and return through the enclosure of the other phases, as shown in Figure 31.8. This arrangement provides the required magnetic shielding between the phases, as the induced currents flowing through them adjust among themselves and make it an almost balanced current system. The magnitude of such current is almost equal to that of the main conductors while the direction is the opposite.

These balanced enclosure currents also induce electric fields into nearby structures, RCC beams and columns in the same way as the main conductors, and hence nullify most of the space magnetic fields. These space fields (fields outside the enclosure) are otherwise responsible for causing eddy current and hysteresis losses in the metallic (magnetic) structures, RCC beams and columns in the vicinity. The electrical bonding of enclosures thus

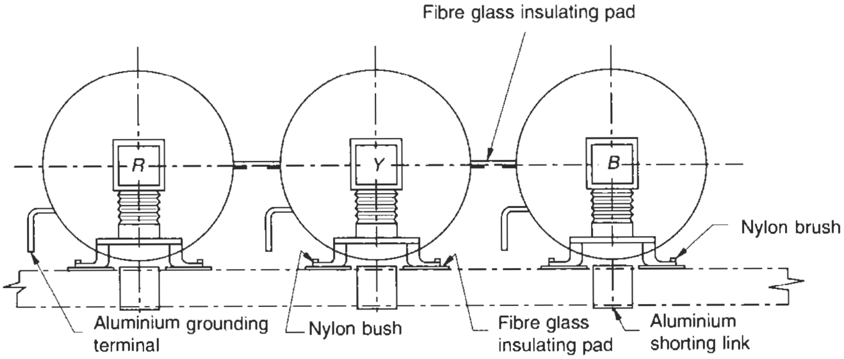

Figure 31.5(a) Typical insulating practice to isolate enclosure of a discontinuous IPB system (Courtesy: Best & Crompton)

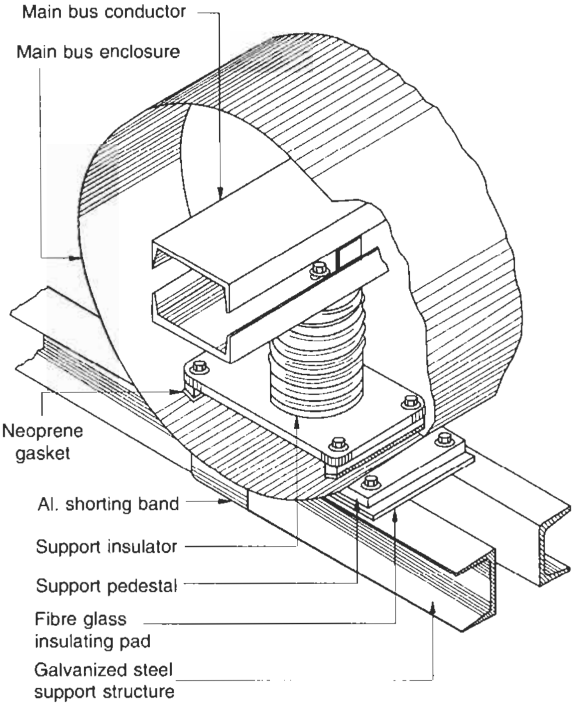

Figure 31.5(b) Cross-sectional view of an IPB with insulated (discontinuous) enclosure illustrating busbar-supporting arrangement (Courtesy: Best & Crompton)

nullifies the proximity effect and helps to reduce the heating of such structures to a very great extent.

The electrodynamic and electromagnetic forces between the conductors and the structures are also reduced to only 10–15% or even less. These two advantages are not available to this extent in a non-continuous enclosure. The induced current causing the magnetic field in the space is now reduced to only,

$$\phi_{\text{space}} \propto (\bar{I}_r - \bar{I}_e) \qquad (31.1)$$

Figures 31.7 and 31.8 illustrate the disposition of the conductor and the enclosure fields in the space and their nullification, where

I_r = conductor current

I_e = enclosure current

I_r and I_e are almost 180° out of phase.

therefore, $\phi_{\text{space}} \propto (I_r - I_e)$

For better shielding it is essential that bonding is carried out at the farthest possible locations where the configuration of the IPB changes such as at the bends and tap-offs or where it passes through a wall. Where bonding is not possible, the supports and the enclosure must be adequately reinforced to sustain electrodynamic forces, especially during a fault. Figure 31.2(b) illustrates the shorting and grounding locations of an IPB system.

To limit the fault level, if it is likely to exceed the designed limits, or the breaking capacity of the interrupting device, or the associated equipment and to limit the induced circulating currents in the enclosure during normal operation, to contain enclosure losses in very large ratings of bus systems, say, 25 000 A and above (above 500 MW), then unsaturable type series reactors (for details refer to Chapter 27) may be provided in the enclosure circuit, as illustrated in Figure 31.8 to limit such high currents especially during a fault. The reactors should not saturate under fault conditions, as they are provided to supplement the enclosure circuit impedance to limit the high currents through the enclosure, especially during faults, and reduce the forces between the main conductors. For a better flow of circulating currents, it is also grounded only at one point. Accordingly, it is supported on non-conducting supports to keep the ground path continuous and completely isolated. The enclosure must also be insulated electrically from the rest of the plant by rubber bellows.

A continuous enclosure provides a high degree of magnetic shielding for metallic objects and structures located in the vicinity and generates only nominal eddy current or hysteresis losses. Magnetic shielding also significantly reduces the electrodynamic stresses caused by short-circuits on the structures and between the enclosures of the other phases. For details on the thickness and size of enclosure to provide magnetic shielding up to a required level, refer to the sample calculations in Example 31.1 and further reading at the end of this chapter.

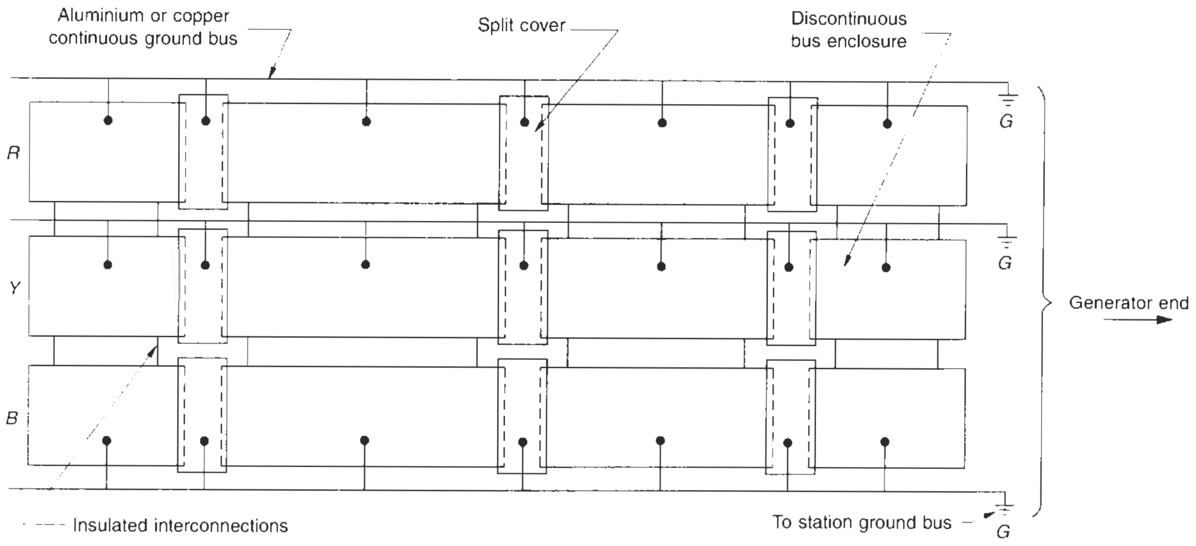

Figure 31.6 Grounding arrangement of a noncontinuous isolated phase bus (IPB) system

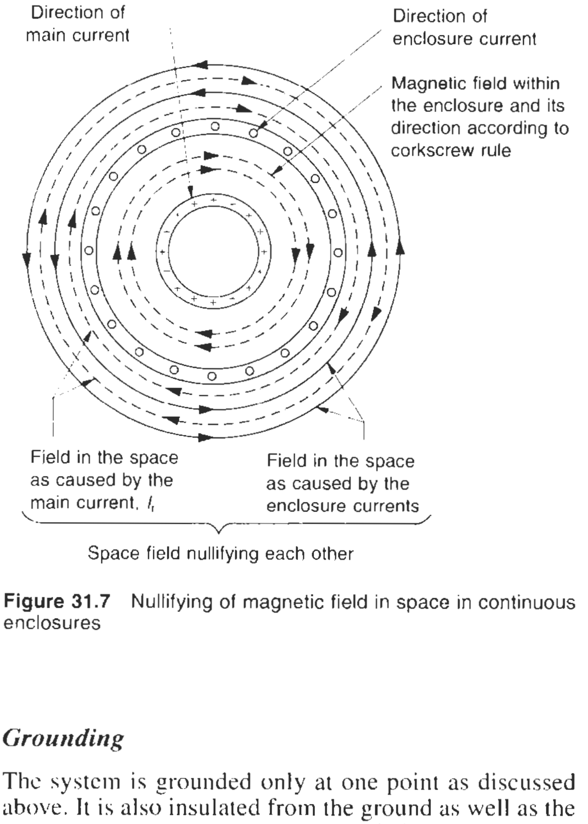

Figure 31.7 Nullifying of magnetic field in space in continuous enclosures

Grounding

The system is grounded only at one point as discussed above. It is also insulated from the ground as well as the rest of the plant along its length by being supported on insulated foot mountings. The minimum clearance of the bus from the ground will depend upon the voltage of the IPB system. The ground bus is not screened through the enclosure but is provided some distance away from it to remain unaffected by the fault currents. Otherwise it may also develop large electric fields and be subjected to excessive forces on a fault.

31.3 Special features of an IPB system

It is almost mandatory for such a bus system to have the following features to make it more reliable and to provide uninterrupted services over long years of strenuars operation:

1. The enclosure is constructed of non-magnetic material, generally aluminium, in view of its low cost and weight as compared to copper. The non-magnetic material eliminates hysteresis and eddy current losses in the enclosure, as a result of mutual induction.
2. To contain the proximity effect, in the metallic structures existing in the vicinity, it is essential that the IPB enclosures be at least 300 mm from all structures existing parallel and 150 mm existing across the enclosures. A distance of 300 mm is sufficient to contain the proximity effect in view of the substantially reduced magnetic field in the space.
3. The enclosure must be airtight and waterproof.
4. Large generators are hydrogen (H_2) cooled. H_2 forms a highly explosive mixture with air and may leak through the generator terminals to the bus enclosure. Suitable sealing-off chambers must therefore be provided between the generator and the IPB enclosure with ventilation to allow gases to be vented to the atmosphere in the event of a leakage.
5. The termination of the conductor at the generator, transformer and the switchgear ends are made through flexible connections (Figure 31.4(a)). Jointing of the enclosure sections is carried out with a rubber or metallic (mostly aluminium thin sheets) expansion bellows assembly, as shown in Figure 31.4(b). Besides absorbing the enclosure expansion, the bellows assembly takes care of minor mismatches between the flanges of the IPB and the generator or the

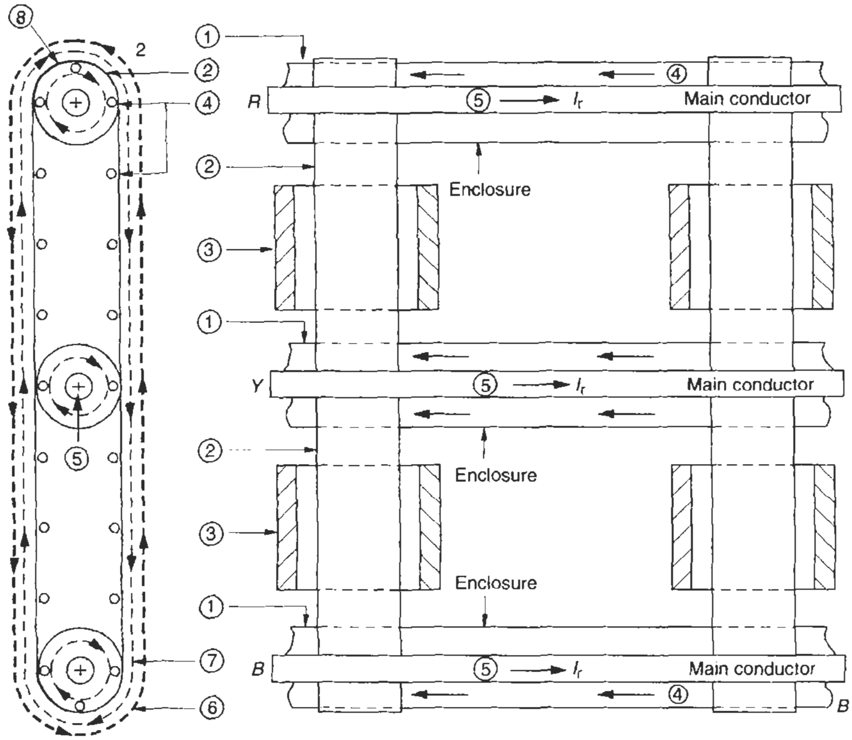

(1) Unbonded portions may experience excessive forces.

(2) Shorting links (bonding) between enclosures. It helps to balance the flow of current through the enclosure.

(3) Saturable reactors to limit the enclosure currents and reduce the fault level and losses caused by it.

(4) Direction of current in the enclosures. Enclosure induced currents can be up to 0.90 to 0.95 I_r.

(5) Direction of current in the main conductors.

(6) Field produced by the enclosure currents nullifying the main field.

(7) Residual field in the space ≈ 10–5% of the total field produced by I_r.

Figure 31.8 A continuous IPB system with phase reactors

transformers and also prevents transmission of generator and transformer vibrations through the enclosure. The expansion bellows, when they are metallic, are insulated with the housing as they are made of thin sheets and are incapable of carrying excessive enclosure currents. They are clamped to the housing with the help of an insulating pad and metallic bands as shown in Figure 31.4(b). To maintain the continuity of enclosure currents, the bellow assemblies are superimposed with enclosure shorting flexibles, sufficient to carry the full enclosure currents (see Figure 31.4(c)).

However, they should remain insulated when terminating with an equipment or a device such as at the ends of generators, GTs, UATs or VTs. It is essential to avoid IPB longitudinal currents through the terminal equipment. Now the bellows necessarily should be of rubber. Figure 31.4(d) shows a rubber bellows but in this small part of the bellows the conductor field will not be nullified and occupy the space affecting the metallic structures, beams and equip-ment/devices in the vicinity. This needs to be taken into account at site and it should be ensured that the nearest structure, beam or equipment is at least 600 mm away from the IPB enclosure.

6 The terminal ends are provided with terminal palms or tap-off palms, as required, to bolt them to the other sections.

7 The structures supporting the IPB, at bends and tee-offs particularly, are adequately reinforced to sustain the excessive forces that may arise on a fault and tend to shear off such joints and structures. Even in a continuous type of enclosure it may not always be possible to fully bond all such parts electrically. Should such a situation arise, current limiting reactors may be provided at the bends and the tee-off joints to contain the excessive enclosure currents at such locations, particularly during faults.

8 The exterior of the conductor and the interior of the enclosure are painted with non-magnetic matt finish black paint to improve the heat transfer due to radiation.

9 (a) Provision of space heaters is made to prevent condensation of vapour during a shutdown.
  (b) Shorting links may also be provided to short-circuit the buses for the purpose of generator drying when required, after a long shutdown, due to a fall in insulation level.

10 Locations having low ambient temperature or high humidity may adversely affect the insulation level of the bus system. In this case an ordinary space heater may not be adequate and a separate anti-condensation arrangement may become imperative to dry the condensate and to maintain a high dielectric strength. This may be achieved by:

- Blowing hot air: A typical arrangement is shown in Figure 31.9. The bus duct enclosure is provided with inlet and outlet valves at suitable locations. Hot air is supplied through the inlet valve until the interior of the enclosure is completely dry. The blowing equipment comprises an axial flow fan, a heater unit, an inlet air filter unit, pressure

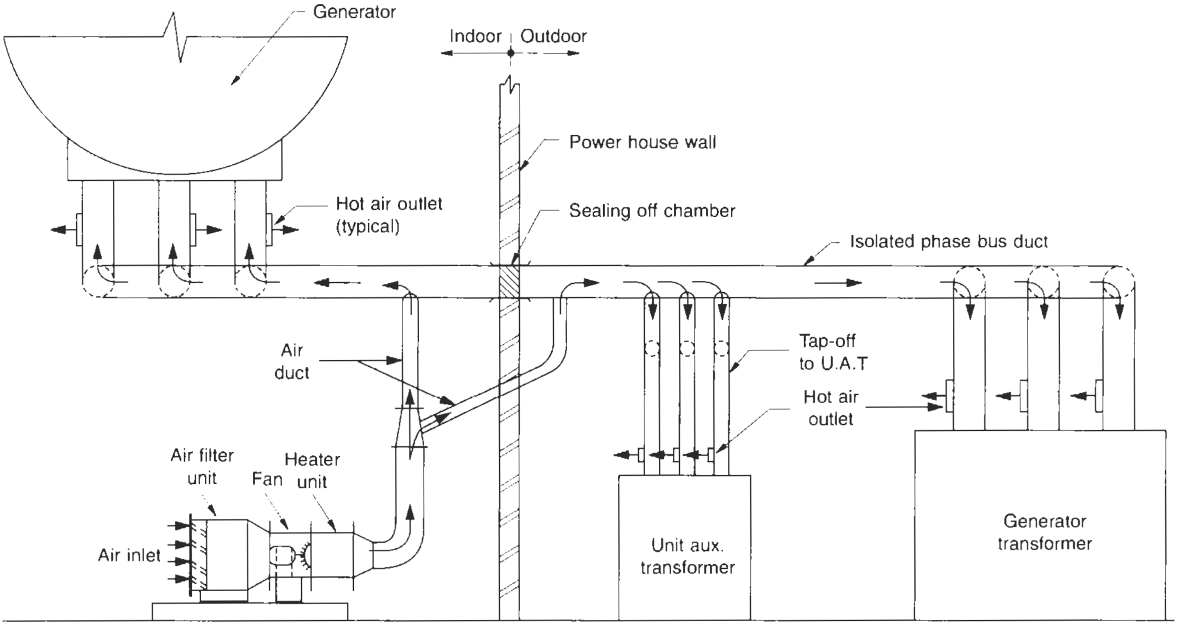

Figure 31.9 A typical arrangement illustrating drying of enclosure through hot air blowing

valves, required controls and interlocks and air ducts.

- Pressurizing the bus enclosure: A typical arrangement is shown in Figure 31.10. In this case the enclosure is maintained at slightly positive pressure by continuously supplying it with dry and clean air or SF_6 to prevent vapour condensation. Compressed air is supplied at a pressure of 5–7 kg/cm^2 and passed through the air dryer and the flow control valve. The leakage, if any, is recommended to be within 5% of the volume of the enclosure per hour. The air dryer removes the moisture present in the compressed air and leaves the air in a bone dry condition having a dew point of –25°C. The dry air is then passed into the enclosure through the control valve and the flow indicator. The controls are set to allow the dry-air flow to the enclosure, until the pressure inside the enclosure reaches the required level.

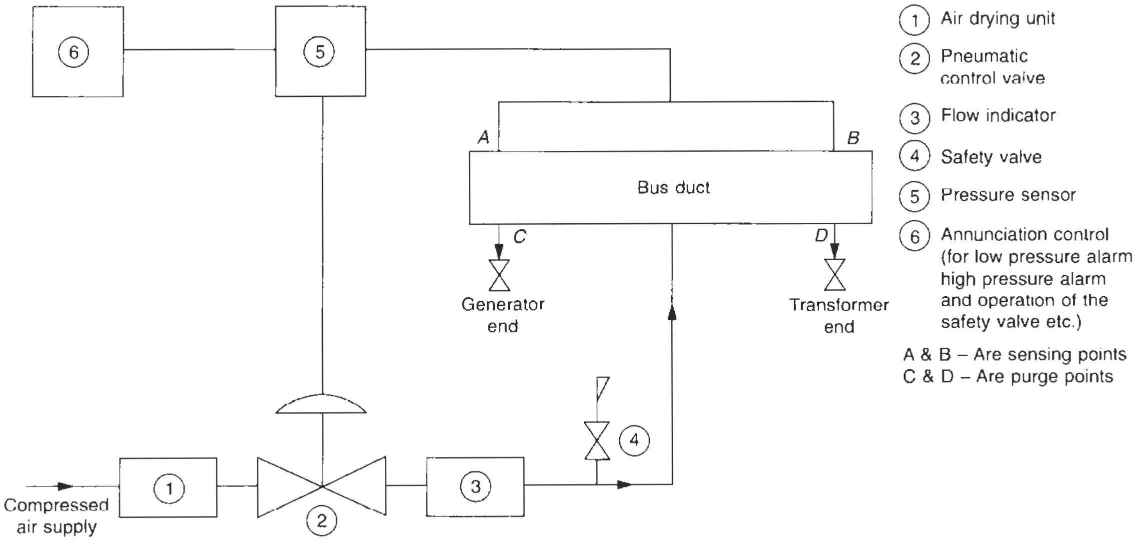

Figure 31.10 Typical layout illustrating pressurization system for an IPB bus system

31.4 Enclosure heating

Heating of enclosures for bus systems in such large ratings is detrimental to their design. In smaller ratings (say, up to 3200 A) it has been easier to do this by increasing the size of enclosure, choosing larger bus sections, changing their configuration or using a non-magnetic enclosure or by adopting more than one of these measures, as discussed in Chapter 28. But this is not the case in large ratings, where heat generated, particularly in the enclosure, is enormous due to carrying almost the same amount of induced currents as the rating of the main conductors. Therefore, dissipating the heat of the conductor and the enclosure is a major task in an IPB system. When designing such a system it is imperative to first check the adequacy of the enclosure to dissipate all the heat generated within permissible limits.

If the heat generated by induced currents (there are no magnetic losses) on load on per phase basis is
In the main conductor, due to $I_r = W_1 = I_r^2 \cdot R_c$,
In the enclosure, due to $I_e = W_2 = I_e^2 \cdot R_e$
In the outdoor portion of the enclosure, due to solar radiation = W_s*
then the total heat generated

$$= W_1 + W_2 + W_s\text{* in watts per unit length} \qquad (31.2)$$

(*only for the outdoor parts)

where
I_r = rated current of the main conductors in Amperes (r.m.s.)
R_c = a.c. resistance of the main conductors per unit length at the operating temperature, in Ω
I_e = Induced current through the enclosure in Amperes (r.m.s.). This will vary with the type of enclosure, the effectiveness of its electrical bonding and the impedance of the bonding links. If current limiting reactors are used in the enclosure circuit this current would be reduced substantially, as discussed above. Without such current limiters, the current may be assumed to be up to 95% of I_r. Experiments have corroborated this assumption in continuous bus systems.
R_e = a.c. resistance of the enclosure, per unit length at the operating temperature in Ω.

To determine R_c and R_e the same procedure may be adopted as discussed in Section 28.7. For a tubular conductor,

$$R_{dc20} = \frac{\rho l}{\pi \cdot d_m \cdot t} \text{ in } \Omega/\text{m or } \mu\Omega/ft \qquad (31.3)$$

(in MKS or FPS units, depending upon the system adopted)
where
ρ = resistivity of metal at 20°C in Ωm or in μΩcm
d_m = mean diameter of the tube in m or cm
t = thickness of the tube in m or cm
l = length of the conductor in m or cm

From similar skin effect curves, as in Figure 28.13(b), corresponding to t/d the ratio R_{ac20}/R_{dc20} can be found. Having determined R_{ac20}, it must be corrected to the operating temperature by using

$$R_{dc\theta} = R_{dc20}\,[1 + \alpha_{20}\,(\theta - 20)] \qquad (31.4)$$

where
$R_{dc\theta}$ = d.c. resistance of the conductor at the operating temperature
α_{20} = temperature resistance coefficient of the metal at 20°C per-°C (Table 30.1)

W_1, W_2 and W_s (W_s, when considering the outdoor part) can thus be determined. The total heat, W_t, so generated can be naturally dissipated through the enclosure by radiation and convection. If natural cooling is not adequate, forced cooling can be adopted through forced air or water. But precautions must be taken to ensure that the system is protected from absorbing dirt, dust or moisture from the atmosphere.

Note
For medium ratings as in a non-isolated bus system of up to 3200 A little significance is attached to such effects because of a comparatively weaker magnetic field produced by the conductors of each phase, and cancellation of a part of it by the fields of the other phases (Figure 28.22 and Section 28.8). The enclosure currents are now a much lower percentage of the current of the main conductors and hence cause a low heating of the enclosure. The residual magnetic field in such cases is also small and is normally ignored. Yet certain installations may require magnetic shielding in such ratings also where these fields may influence the operation of the instruments that are installed in the close vicinity.

31.4.1 Skin effect in a tubular conductor

Tubular conductors provide the most efficient system for current carrying, particularly large currents. As discussed above, the current density is the maximum at the skin (surface) of the conductor and falls rapidly towards the core. Experiments have been conducted to establish the normal pattern of current distribution in such conductors at different depths from the surface (Figure 31.11).

At a certain depth, the current density reduces to $1/\varepsilon$ = 0.368 of the value at the surface. This depth is termed the depth of penetration, δ_p. Of the total heat generated in such conductors, almost 80% occurs within this depth (annulus). In other words, around 90% of the total current heat generated $\propto 0.9^2 \simeq 0.8$ is concentrated in this area alone. This depth can be represented by

$$\delta_p = \frac{1}{2\pi}\sqrt{\frac{\rho}{\mu f}} \qquad (31.5)$$

where
ρ = resistivity of the metal in e.m.u.
= $10^9 \times$ (ρ in Ω cm) as in Table 30.1
f = frequency of the system in Hz
μ = effective permeability of the medium in which the field exists (aluminium in the present case), and will depend upon the electric field induced in the enclosure
= 1 for non-magnetic materials

δ_p will thus vary with the material of the conductor and the enclosure and the operating temperature. For

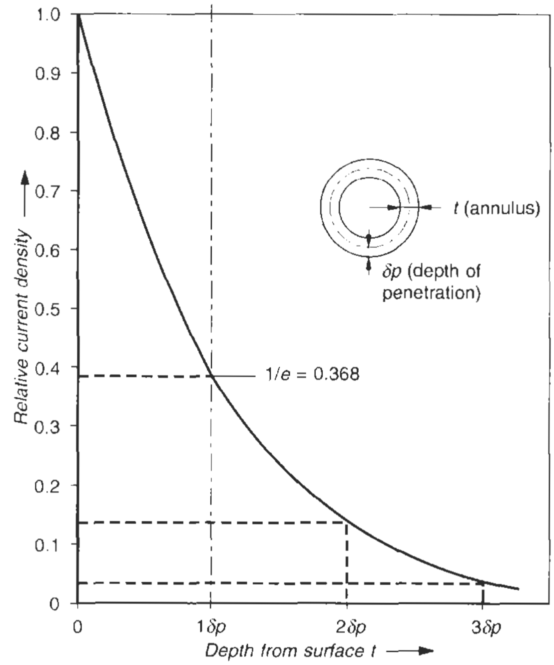

Figure 31.11 Skin effect in tubular isolated conductors in terms of depth of penetration δp

aluminium, grades EIE-M and E-91E, we have worked out the likely values of δ_p at an operating temperature of 85°C as follows:

1 For grade EIE-M

$$\rho_{20} = 2.873 \times 10^{-6}\ \Omega\ \text{cm}$$

$$\alpha_{20} = 4.03 \times 10^{-3}\ \text{per °C}$$

$$\therefore\ \rho_{85} = \rho_{20}\,[1 + 4.03 \times 10^{-3} \times (85-20)]$$

$$= \rho_{20} \times 1.26195\ \Omega\ \text{cm}$$

Therefore depth of penetration at 20°C

$$\delta\rho_{20} = \frac{1}{2\pi}\sqrt{\frac{2.873 \times 10^{-6} \times 10^{9}}{1 \times 50}}$$

$$= 1.207\ \text{cm or } 12.07\ \text{mm}$$

and at 85°C

$$\delta\rho_{85} = 12.07\sqrt{1.26195}$$

$$= 13.56\ \text{mm}$$

(The suffix refers to the temperature.)

2 For grade E-91E

$$\rho_{20} = 3.133 \times 10^{-6}\ \Omega\ \text{cm}$$

$$\alpha_{20} = 3.63 \times 10^{-3}\ \text{per °C}$$

$$\therefore\ \rho_{85} = \rho_{20}\,(1 + 3.63 \times 10^{-3} \times 65)$$

$$= \rho_{20} \times 1.236\ \Omega\ \text{cm}$$

$$\therefore\ \delta\rho_{20} = \frac{1}{2\pi}\sqrt{\frac{3.133 \times 10^{-6} \times 10^{9}}{1 \times 50}}$$

$$= 1.26\ \text{cm or } 12.6\ \text{mm}$$

and $\delta\rho_{85} = 12.6\ \sqrt{1.236}$

$$= 14.01\ \text{mm}$$

Since most of the current will flow through δ_p, a thicker conductor will only add to the bulk and cost of the tube without proportionately raising its current-carrying capacity. A greater thickness does not assist in heat dissipation, as the heat is dissipated more quickly from the outside than the inside surface of a body.

31.4.2 Thickness of enclosure

For a near-total shielding of the field produced by the main conductors (i.e. for $I_r - I_c$ to be very low), it is essential to have the thickness of the enclosure as near to δ_p as possible. But this may prove to be a costly proposition. In addition, a higher induced current in the enclosure will also mean higher losses. This has been established by computing the cost of the enclosure and capitalizing the cost of losses for minimum losses in the enclosure

$$\frac{\text{Thickness of tubular conductor } (t)}{\text{Depth of penetration } (\delta_p)} = \pi/2$$

or

$$t = \frac{\pi}{2}\,\delta_p \qquad (31.6)$$

But this will also prove to be a costly proposition.

A smaller surface area may require forced cooling and an extra cost for the same while a larger enclosure would mean a higher cost for the enclosure itself. Considerations of cost will thus determine a larger enclosure or a forced cooling. Two factors have been considered relevant here:

- **Loss factor:** This is a function of losses (W_t) in the main conductor (W_1) and the enclosure (W_2). A curve as illustrated in Figure 31.12 can be established between the losses versus thickness (t) of the enclosure by experiments.
- **Optimization factor:** This is a function of the cost of enclosure for different thickness, t, the cost of the cooling system (if cooling is considered necessary) and the capitalized cost of the losses at different thickness t. A curve as shown in Figure 31.13, rather similar to that in Figure 31.12, can be established theoretically between the total cost of the IPB system versus t.

The above two curves will help optimize the thickness, t, of the enclosure for a total minimum cost of the system. Enclosure losses may not be lowest at this thickness as shown in Figure 31.12, but they would maintain the temperature rise of the enclosure within limits. The magnetic field in the space, being already very low, would require no other measure. Moreover, a small field in the space may cause only a small amount of heat in nearby structures, which may be

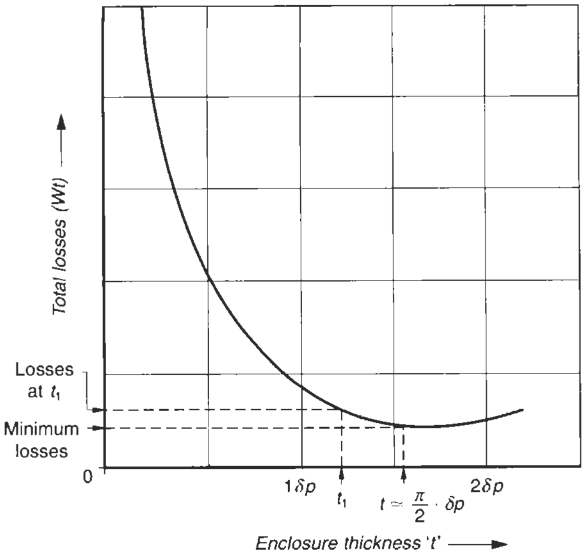

t_1 = Thickness of enclosure for minimum cost of IPB system (Figure 31.13)

Figure 31.12 Variation in losses with thickness of enclosure

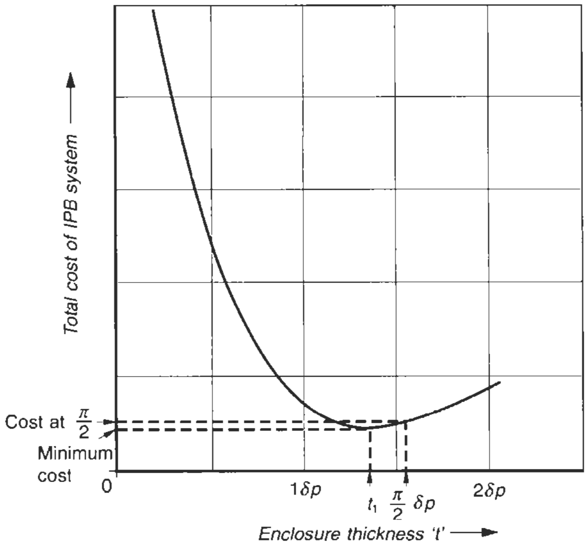

Figure 31.13 Optimization curve between thickness of enclosure and the total cost of the IPB system

acceptable. Therefore, to choose a thinner enclosure is common practice to economize on the total cost, allowing part of the magnetic field to occupy the space.

31.4.3 Proximity effect in an IPB system

The three phases are now completely isolated and adequately spaced. They are thus hardly under any influence of proximity. The forces are now greater between the conductor and the enclosure rather than between two phases due to an almost negligible or only moderate magnetic field in the space (Figures 31.7 and 31.8). The emphasis is now more on the losses in the enclosure and the metallic structures outside the enclosure and their consequent heating, rather than the derating of the current-carrying conductors.

To arrive at the most appropriate and economical design of the enclosure is a complex subject and requires detailed study. For brevity, in our present attempt, we have derived inferences from the established work in this field by engineers and authors (see the further reading) and have underlined briefly the basic approach to design such a system. For smaller ratings, up to 3200 A, the discussions in Chapter 28 will generally suffice to design a good bus system. There we have assumed the content of proximity on the conductors and exercised care while selecting the size and material of the enclosure, spacings between the enclosure and the busbars and between the busbars of two adjacent phases etc. In an IPB system, however, when the space occupied by the electric field is large may cause excessive parasitic currents within the enclosure and in the metallic structures in close proximity outside the enclosure and excessive heating in both. The assumptions made earlier may not suffice for its effect on the enclosure, supports and the structures in the vicinity.

To provide magnetic shielding within the enclosure will require the enclosure to be made of non-magnetic material at the first instance to eliminate magnetic losses and a cross-section sufficient to carry a near full load current on the other. It is also essential to allow a nil or only a moderate field in the space outside the enclosure to limit the parasitic currents in the supporting and other metallic structures so that they do not require any special treatment or insulation and protect the operating personnel from excessive touch or step voltages. The main emphasis to design such a system is therefore to optimize the thickness of the enclosure and its overall size to obtain the required magnetic shielding and a temperature rise within desirable limits.

31.4.4 Solar radiation

The part of the bus enclosure installed outdoors is exposed to solar radiation which is a cause of additional heat gain by the enclosure. ANSI C-37.24 has provided a basis to determine its effect in terms of heat generated as follows:

during winter – 670 W/m^2
during summer – 990 W/m^2
for tropical areas* – 1100–1200 W/m^2

By simulating these effects in a test laboratory it has been established that solar radiation may raise the temperature of the external surfaces by up to 15°C, depending upon the colour and the condition of the surface.

---

*Tropics are the regions of the earth that lie about 2570 km north and 2570 km south and parallel to the equator (Figure 31.14). These regions signify the areas that generally have a warm to hot climate throughout the year, as the sun reaches its greatest altitude.

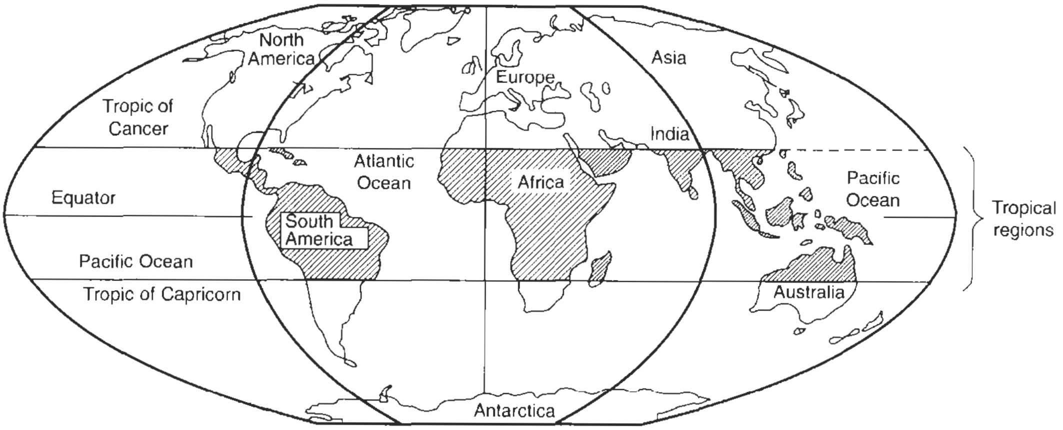

Figure 31.14 World map showing Tropical regions (Courtesy: World Book Encyclopaedia)

Surfaces with light colours absorb less heat than dark surfaces. But light colours may fade with the passage of time. The outer surfaces may also collect soot and dirt and hence lose the benefit of being light-coloured to some extent. The heat generated by solar radiation per foot length can be estimated by

$$W_s = k_a \cdot G \cdot A \text{ W/ft} \qquad (31.7)$$

where

k_a = coefficient of absorption. When a canopy is provided on the outdoor part of the enclosure the coefficient, k_a, may be reduced.

G = global solar radiation
= 1100 W/m^2 (for tropical areas)

A = area of the enclosure that is exposed to the sun. We have assumed about 50% of the surface area falling outdoors which is exposed to direct solar radiation.

During heat dissipation by radiation the colour and condition of the surface plays a similar role. Dark-coloured bodies dissipate more heat than the light-coloured ones. The amount of heat absorption and emission for the same body may therefore be assumed to be almost the same. Accordingly, Table 31.1, for selected colours, may be considered for the coefficients of absorption and emission of heat due to solar radiation and natural radiation respectively.

In our sample calculations (Example 31.1) we have chosen the colour of the outdoors surface as light grey and taking the weathering effect into account, have considered the coefficient of both absorption and emission as 0.65. The manufacturer, depending on the colour and site conditions, may choose a suitable coefficient. It is, however, advisable to be conservative when deciding the temperature rise due to solar radiation to be on the safe side.

The normal practice of all leading manufacturers is to keep the same bus and enclosure sections for the outdoor and indoor parts of the bus system. This is to retain simplicity in design and ease of jointing and interconnections. But this may prove to be a costly arrangement, as now the indoor section of the bus system will have to be designed for outdoor conditions. The practice to economize on conductor and enclosure sizes is to provide a shade or a canopy over the outdoor part of the bus system to protect the enclosure from direct sunlight and hence mitigate the solar effect.

Table 31.1 Coefficients of absorption (of solar radiation) and emission (natural radiation) for a metallic surface located outdoors

Colour of the surface when new	*Coefficient of absorption, K_a and emission e*	*Approximate temperature rise of the surface, °C*
White	0.14	2.2[a]
Light grey	0.50	7.7
Medium grey	0.75	11.6
Dark grey	0.95	14.7
Black	0.97	15

[a] Example: $\frac{0.14}{0.97} \times 15 = 2.2°\text{C}$

31.5 Natural cooling of enclosures

Heat dissipation from a hot body to the surroundings can occur in two ways:

1 **By Radiation (W_r)** This heat loss is related to the difference of the fourth power of the absolute temperatures and the emissivity of the enclosure, and is represented by the Stefan-Boltzmann law expressed by (see Dwight *et al.*, 1940)

$$W_r \simeq \frac{36.9}{10^{12}} \cdot e \cdot A_s [T_1^4 - T_2^4] \text{ W/ft} \qquad (31.8)$$

where

e = coefficient of emissivity, expressed by the condition of the surface of the hot body (Table 31.1)

A_s = effective surface of radiation per foot of enclosure length in square inches

T_1 = absolute temperature of the hot body
= $(\theta_s + 273)$°C (θ_s = enclosure surface temperature in °C)

T_2 = absolute ambient temperature
= $(\theta_a + 273)$°C (θ_a = ambient temperature in °C)

(For conductors, the enclosure temperature will become their ambient temperature)

2 **By convection (W_c)** (from the external surface of the enclosure): For a hot body installed indoors and reasonably ventilated this can be expressed by (Dwight *et al.*, 1940)

$$W_c \simeq 0.0022 \cdot A_s \cdot \frac{P^{0.5} \cdot \theta^{1.25}}{h^{0.25}} \text{ W/ft} \qquad (31.9)$$

where

A_s = effective surface area per foot of enclosure length in square inches

P = air pressure in atmospheres
= 1 at sea level

θ = temperature rise of the enclosure above the ambient temperature in °C

h = width of flat or bar mounted in a vertical plane, or the diameter of a round conductor in inches.

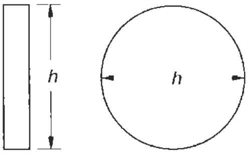

3 **By forced convection** The factors that can influence the temperature of the enclosure, installed outdoors are wind and snow, other than forced cooling. But their effect on actual cooling may be small. Sometimes this happens and sometimes not. It is better to ignore this effect when estimating various thermal effects. Natural convection and radiation will take account of this.

31.6 Continuous rating

The continuous current rating of a bus system can be defined by the current at which a steady-state thermal condition can be reached. It is a balance between the enclosure and the conductor's heat gain and heat loss. If this temperature is more than the permissible steady-state thermal limit it must be reduced to the desired level by increasing the size of the conductor or the enclosure or both, or by adopting forced cooling. Otherwise the rating of the bus system will have to be reduced accordingly.

31.7 Forced cooling

For ratings up to 20 000 A natural cooling is found to be generally adequate to maintain all temperatures within limits. Where this is not possible, as when the size of the enclosure cannot be increased for whatever constraints (generator termination being one), to dissipate the required heat, then forced cooling may be adopted. The general practice is to eliminate forced cooling as far as possible to avoid the piping network and the associated equipment and accessories and their regular maintenance and upkeep. This is one major factor against forced cooling. A breakdown of cooling system will not result in a shutdown of the bus system but will require its deration and lead to an underutilization of the generating unit. Forced cooling (by air, gas or liquid) is more relevant when the total length of the bus system is sufficient to justify initial investment in the external cooling arrangements and their regular upkeep and also when one can economize on the cost of conductor and the enclosure at the cost of forced cooling.

For 25 000 A and above, heat dissipation through natural cooling alone may not be sufficient. It may require a larger enclosure. But this may become too large to terminate at the generator end and be a limiting factor, besides becoming more expensive. In this case one can select forced cooling.

31.8 Influence of a space field on metallic structures

The influence of a induced field on a metallic (magnetic) structure is in the form of closed magnetic loops, which cause hysteresis and eddy current losses. These closed loops cannot be broken by insulating magnetic structures at bends or joints or any other locations. (Refer to Figure 28.32 for more clarity.) There is thus no treatment that can be applied to such structures or bodies in the vicinity of an IPB to protect them from the magnetic effects of the field if present in the space.

The IPB system must therefore be designed so that it allows only a moderate field in the space. The field should be incapable of heating structures in the vicinity beyond a reasonable limit, or cause step and touch voltages. These voltages are undesirable and may become dangerous to a human coming into contact with them.

31.9 Fault level

As discussed in Section 31.2.2, in continuous enclosures there is a near-magnetic shielding between any two phases. The space field between the enclosures is also of the order of 10–15% or even less ($\propto (I_r - I_e)$) than that of the field in the enclosures. As a result, the electrodynamic and electromagnetic forces generated between the enclosures during a fault are also only nominal ($F_m \propto (I_{sc}^2 - I_{sce}^2)$ where I_{sc} is the fault level of the system and I_{sce} the corresponding fault current through the enclosure). One therefore need to deal only the forces between the conductor and the enclosure, which will remain as high as in a non-segregated bus system ($F_m \propto I_{sc}^2$) rather than the forces between the enclosures.

When such large generating units are connected to a power grid the bus system connecting the generator and the generator transformer will be subject to a higher fault level commensurate with the fault level of the power grid limited upto the fault level of GT (Section 13.4.1.5 and Figure 13.21). Similarly, the tap-offs connecting the UATs will be subject to a cumulative fault level, one of the generator and the other of the power grid (limited up to GT). Generally, therefore such large ratings of bus systems are subject to a high fault level. (For a few large ratings of bus systems these levels are shown in Table 13.8).

For ratings of 25000 A and above it is possible that the fault level of the system may exceed the rupturing capacity of the available interrupting devices. To reduce the fault level in such cases, current limiting series reactors can be provided with the bus system, as noted above and illustrated in Figure 31.8.

31.10 Voltage drop

As discussed earlier, this has no relevance in HT systems.

31.11 Forming sections for IPB systems

It is not possible to extrude large sections in full circular, hexagonal or octagonal shapes. These are normally produced in smaller extruded sections as illustrated in Figure 31.15. Circular sections may, however, also be rolled from sheets in two halves to obtain the desired size. Moderate sizes of circular sections are also available in extruded form. For hexagonal and octagonal shapes, the thickness and lengths of such sections will depend upon the practices adopted by the manufacturer of the extruded sections. The desired size of conductor and enclosure can then be shop fabricated out of these sections, choosing the nearest next available size, to form them into the required size of conductor and enclosure.

Enclosures

Small margins are added in enclosures for inspection and maintenance windows and tap-offs, which may affect their current ratings. These sections are welded circumferentially to give them the required shape (circular, hexagonal or octagonal). They are welded longitudinally to shape them into the required length and configuration. Extreme care must be taken when making such joints, to make them airtight and to ensure maximum continuity of current.

Conductor

The conductor may not have any inspection or maintenance windows, but may be provided with surface openings, as illustrated in Figure 31.15 to dissipate its interior heat into the enclosure for onward dissipation by the enclosure's surface to the atmosphere. This facility, however, may not be available in smaller circular conductors if they are extruded as one piece (which is possible in smaller sections).

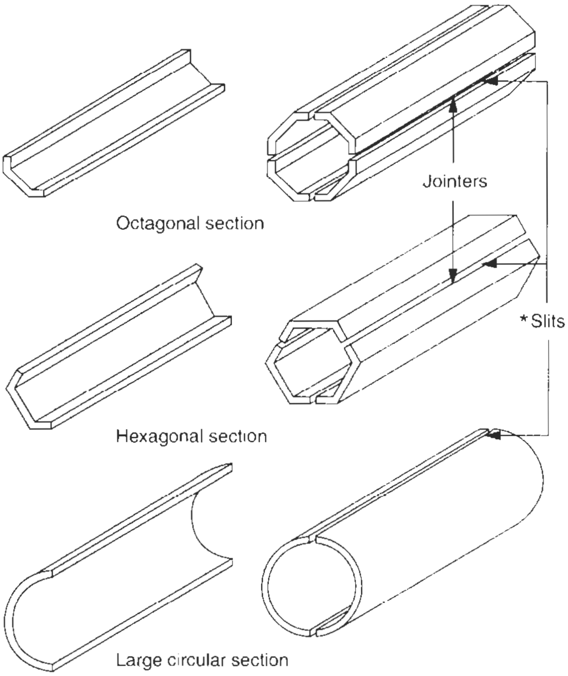

* Slits are left (≈ 50 mm wide) to facilitate heat dissipation from the inside surface of the conductors [enclosures are totally closed]

Note

Number of sections would depend upon the dimensions of the conductor or the enclosure.

Figure 31.15 Forming a conductor or enclosure from the available extruded sections

Since the aluminium sections are formed to individual designs, there are no ready reckoners available from aluminium manufacturers of extruded sections to quickly determine their current ratings. This may be established only by conducting shop tests. It is not recommended to assign the rating on the basis of per unit area in view of a number of factors that may influence the rating, such as the surface area, the thickness of the enclosure or the conductor sections and ambient conditions. The design of a bus section is a matter of experience of the design engineer. As a rough guide, however, to establish the basic parameters, a rating around 350 to 400 A/in.^{2} may be considered which will also take account of all possible deratings. (Refer to the sample calculations in Example 31.1.) The normal practice is to use a computer, which can provide a number of alternative designs.

The cross-sections of the conductor and the enclosure are then checked for their adequacy to dissipate the heat generated. The cross-section is then adjusted suitably by permutations and combinations to arrive at the most appropriate size, keeping in mind the available extruded sections, accounting for all such factors that may affect the rating or the fault level of the enclosure and the conductor, such as tap-offs, which are subjected to a cumulative fault level, openings in the conductor for heat dissipation or the enclosure for inspection windows that can influence their ratings. A calculation in Example 31.1 will clarify the procedure to establish the size of the conductor and the enclosure for an IPB. The final sizes attained can then be laboratory tested to establish their accuracy.

31.12 Determining the section and size of conductor and enclosure

An isolated phase bus is also a tailored system to suit a particular layout. Size and area of cross-section will vary with the manufacturer. The insulators also play an important role in determining the diameter of the enclosure and its thickness as well as the diameter and thickness of the conductor. The manufacturer of an IPB may have the insulators made to specifications (for voltage, height, clearance and creepage distances) or make a choice from what is available in the market and compromise on the enclosure's diameter. To standardize on the size of conductor and enclosure for such systems is not normal practice. A manufacturer, however, can do so for his adopted design practices and standardize on some vital parameters such as the type of section (round, hexagonal or octagonal), depending upon the current rating as well as the availability of the extruded aluminium sections produced by indigenous manufacturers, design of insulators, area of cross-section and the system of cooling, etc. Generally, natural cooling and hollow cylindrical sections are preferred.

In smaller bus systems, say, up to 3200 A, standard data for sizes of busbars and their current ratings have been long established, as noted in Section 30.2 and Tables 30.4 and 30.5 for different sections and cross-sectional areas. These data can be used in the design of a particular bus system. But an IPB has to be specially designed. Below we provide brief guidelines for designing such a system from fundamentals, i.e. by applying the theory of thermal equilibrium between the heat generated by the system (conductor and the enclosure) and that dissipated by the conductor and the enclosure surfaces.

The amount of heat generated will decide the size and shape of the main current-carrying conductor, the rating and size of the enclosure and the provision of external cooling, if necessary. As noted earlier, forced cooling, if it can economize on the cost of the bus system, can be used. The one factor against the forced cooling is the need for piping network, additional equipment and its regular upkeep. Breakdown will not result in a total shutdown but a reduced rating of the bus system and an underutilization of the generating unit. For larger ratings, however, above 25 000 A, forced cooling may become mandatory to dissipate the great heat generated in the enclosure. In such cases the size of the enclosure which is restricted by the size of the generator terminals may prove insufficient to dissipate the heat generated.

We have estimated the likely heat that may be generated by a particular size of conductor and enclosure for a certain current rating and then have counterchecked whether the conductor and the enclosure so chosen can dissipate this heat by radiation and natural convection, and reach a state of thermal stability within permissible limits or we may have to increase the size of the conductor or the enclosure, or both, and/or augment the heat dissipation through forced cooling to meet thermal requirements. The theoretical design is then put to laboratory tests to establish its accuracy.

Current rating varies with the surface area of a conductor and its thickness (annulus). In our sample calculation, to establish the basic parameters of the conductor and the enclosure, we have considered the current density for both as 400 A/inch^2.

The outdoor part of the enclosure has to perform more onerous duties as it has to withstand weather conditions and also absorb solar radiation. It has also to dissipate the heat of the conductor in addition to its own. It is therefore possible that the surface area of enclosure so chosen may have to be increased, and this will be revealed during thermal calculations which are carried out to check its suitability.

With this assumption, the basic cross-section of the conductor and the enclosure can be chosen. It is then counterchecked whether the size so chosen is adequate to reach a thermal stability. When desired, the t can be suitably modified to reach thermal equilibrium. The sizes can be optimized by plotting a few theoretical graphs:

- Losses versus t (Figure 31.12) and
- Cost versus t (Figure 31.13) to optimize t and hence, the cost of the conductor and the enclosure. For this t, the diameter may be modified to arrive at a more economical design. A higher t will mean a lower diameter and vice versa, and may be modified to satisfy the conductor's current-carrying and the enclosure's heat-dissipating requirements. Since the size of a hollow conductor, for large to very large current ratings, is not standardized the cylindrical diameter (d) and the wall thickness (t) can be varied, depending upon the rating, the extruded sections available and the cooling system adopted by the manufacturer. The exact d and t is then established by trial, and optimized as noted above. Figures 31.12 and 31.13 suggest that for a more economical design, the thickness must be less than the depth of penetration (δ_p). In enclosures a more economical design is achieved by keeping t in the vicinity of 50–60% of δ_p. This may mean some field in the space, but its severity is already mitigated by arresting most of it by the enclosure. Leading manufacturers have established their own data and programmed them on computers for routine reference and designing a bus system. These data are then checked for their accuracy by conducting heat run tests on sample lengths (Section 32.3.4). After a few initial designs it is possible to optimize and predefine the vital parameters for a particular rating.

The exercise below is purely theoretical, based on the information and the data available on the subject, with a view to providing the basic guidelines to a practising engineer to design an IPB system.

Since ANSI-C-37.23 is available in the FPS system, we have adopted this for ease of corroboration. Also, since continuous enclosures are more often used for their obvious advantages, we have also considered them in our sample calculations. For details of non-continuous enclosures, reference may be made to the work noted in IEE Committee (1968).

31.13 Sample calculations

Example 31.1
To apply what we have discussed so far we give below a brief outline of a design for an IPB system. The economics of this design would be a matter of further investigation of its performance versus cost. This will require an optimization on the thickness of the enclosure as discussed earlier.

When optimizing the natural cooling of the enclosure its diameter may have to be increased but this would add to the cost of the IPB, on the one hand and make it too large to terminate at the generator end, on the other. The total design is thus a matter of many permutations and combinations. Most manufacturers have optimized their designs, based on experience and test results, through complex computer programming. In this example we will suggest only a basic approach to establish a design. Its optimization would require an elaborate cost analysis as noted earlier although its authenticity can be verified through laboratory tests.

Assume the following parameters of a turbo-alternator (Table 13.8):

Generator size (MW)	500 at 50 Hz
Rated *p.f.*	0.85
Rated MVA	$\frac{500}{0.85} = 588$
Stator nominal voltage (kV)	21
Stator maximum voltage (kV)	24
Stator current (CMR) (A)	16 200
Rated current of IPB (CMR) (A)	18 000
IPB to be designed for (A)	20 000[*]
One-second short-time rating (kA)	122
Type of enclosure for IPB	Continuous

We limit our discussion to the main length of the generator bus. A similar exercise can be carried out to design the neutral shorting star bus, tap-offs to the two UATs, the delta bus to interconnect the GT when it is made of three single-phase units, tap-offs for CTs, VTs and surge protective equipment and all the auxiliary buses described in Section 31.1.1. Some of these tap-offs, such as for UATs, which are low-rating bus sections, can also be made with the construction of segregated phase bus system (Section 28.2.2) to economize on cost.

Requirements
Ambient temperature for enclosure (θ_{ae} in °C) 48

Ambient temperature for conductor (θ_{ac} in°C),

for indoors	80	The same as for the enclosure
for outdoors	95	

Conductor's maximum allowable temperature (θ_c in °C)

for indoors	95	Assuming welded or silver-plated joints
for outdoors	105	

Enclosure's maximum permissible temperature (θ_e in °C)

for indoors	80
for outdoors	95

Assumptions

Conductivity of conductor and enclosure (% IACS)	60 (at 20°C, Table 30.1)
Grade	EIE
Specific resistance (ρ_{20} in $\mu\Omega$ cm)	2.873 (at 20°C, Table 30.1) $= 2.873 \times 10^{-6}\ \Omega$cm
Temperature coefficient of electrical resistance (α_{20} in per °C)	3.96×10^{-3} (at 20°C, Table 30.1)
Effect of solar radiation on the outdoor part of the bus section (°C)	10[†]

Factor of emissivity, for the purpose of heat dissipation for the light grey surface of the enclosure noted above (*e*) 0.65[‡]

Cross-sections of conductor and enclosure are to be the same for indoor and the outdoor parts. This is normal practice of all manufacturers to achieve simplicity in design and ease of interconnections. We have considered a circular conductor (the enclosure is usually circular).

Establishing the size of the conductor

$$\text{Approximate area of cross-section} = \frac{20\,000}{400}$$
$$= 50 \text{ square inches}$$

Let us assume the thickness of the conductor to be close to but less than δ_p, say, around 11 mm, to reduce its diameter and hence increase the gap between the enclosure and the conductor.

$\therefore\ t = 0.43''$

and for the conductor's outer diameter *d*,

$$\left(\text{Area of hollow pipes} = \frac{\pi}{4} d_1^2 - \frac{\pi}{4} d_2^2\right)$$
$$= \frac{\pi}{4}(d_1 + d_2)(d_1 - d_2)$$
$$50 = \frac{\pi}{4}(d_1 + d_2)(d_1 - d_2)$$
$$= \pi(d - 0.43) \times 0.43$$
$$\therefore\ d = \frac{50}{\pi \times 0.43} + 0.43$$
$$= 37.46''$$

and the conductor's outer surface area ($\pi D\ell$) per foot run

$$A_{so} = \pi \times 37.46 \times 12$$
$$= 1411.49 \text{ square inches}$$

(ℓ is the length of conductor in inches)
Conductor's inner surface area per foot run

$$A_{si} = \pi[37.46 - 2 \times 0.43] \times 12$$
$$= 1379.09 \text{ square inches}$$

Establishing the size of the enclosure
As discussed above, that thinner the section, the fewer will

---

[*] This is a normal safety margin ($\simeq$ 10%) for such duties. It accounts for the dip in the grid voltage to which it is connected which may require the generator to operate at a lower voltage but still cope with the full-load (MVA) demand, resulting in a corresponding rise in its current for a short period.

[†] Assuming the approximate absorption coefficient of solar radiation to be 0.65, for a light-grey external surface, having collected soot and dirt over a period of time, as in ANSI-C-37-24 the approximate temperature rise on account of solar radiation

$$= \frac{0.65}{0.97} \times 15 \simeq 10°\text{C}$$

[‡] We have considered the emission of heat, from the surface through natural radiation, nearly the same, as its absorption of heat through solar radiation.

be the losses and the more economical will be the design. But we cannot reduce the thickness and increase the diameter of the enclosure indefinitely. A very large diameter may also become unsuitable to match at the generator end. The generator terminal dimensions, in fact, decide the size of the enclosure. For the generator rating under consideration, we are taking the outside diameter of the enclosure as 1500 mm (it should be considered according to the site requirement and adjusted for the support insulators selected). The terminal spacing of the generator between phases will also determine the centre spacing of the IPB. In our calculations we assume it to be around 68 inches (which may almost be the case in practice).

$$\text{Enclosure's approximate area of cross-section} = \frac{20\,000 \times 0.98}{400}$$

$$= 49 \text{ square inches}$$

(assuming the enclosure's current to be around 98% of the conductor's current

Enclosure's outer diameter = 1500 mm

$$D = 59 \text{ inches}$$

$$\therefore \quad \text{enclosure thickness } t \simeq 0.27 \text{ inch (Figure 31.16)}$$

$$[49 = \pi(D - t) \cdot t = \pi(\simeq 59)t]$$

$$\therefore \text{ exact area of cross-section } = \frac{\pi}{4}(59^2 - (59 - 0.54)^2)$$

$$= 49.79 \text{ square inches}$$

Enclosure surface area per foot run $A_s = \pi \times 59 \times 12$

$$= 2223.12 \text{ square inches}$$

Checking the suitability of the above sections by heat balancing

Heat generated (In the outdoor part)

1 By the conductor

$$W_1 = I_r^2 \cdot R_{ac} \text{ W/ft}$$

$$= I_r^2 \cdot R_{dc} \times \text{skin effect ratio}$$

$$\because \quad R_{dc20} = \frac{\rho_{20} \cdot l}{\pi \cdot d_m \cdot t} \; (l = 1')$$

$$= \frac{(2.873 \times 10^{-6} \; \Omega \text{ cm}) \times (1' \times 12 \times 2.54 \text{ cm})}{\pi \times [(37.46 - 0.43) \times 2.54 \text{ cm}] \; (0.43 \times 2.54 \text{ cm})}$$

$$= 0.271 \times 10^{-6} \; \Omega/\text{ft}$$

and

$$R_{dc105}{}^{*} = R_{dc20} \, [1 + \alpha_{20} \, (105 - 20)]$$

$$= 0.271 \times 10^{-6}[1 + 3.96 \times 10^{-3} \times 85]$$

$$= 0.271 \times 10^{-6} \, [1.3366]$$

$$= 0.3622 \times 10^{-6} \; \Omega/\text{ft}$$

Skin effect ratio, from Figure 31.17 for

$$\sqrt{\frac{f}{R_{dc}}} = \sqrt{\frac{50 \times 10^3}{0.3622}}$$

$$\simeq 371.54$$

$$\text{and } t/d = \frac{0.43}{37.46}$$

$$\simeq 0.011$$

$\therefore$ Skin effect ratio $\simeq$ 1.03

$$\therefore \; W_1 = (20\,000)^2 \times 0.3622 \times 10^{-6} \times 1.03$$

$$= 149.22 \text{ W/ft}$$

2 By the enclosure

(a) By current

$$W_2 = (0.98 \, I_r)^2 \cdot R_{ac}$$

The current through the continuous enclosure is assumed to be at about 98% of that of the main conductor. The actual current may be less than this as a result of low enclosure thickness, which is considered to be less than the depth of penetration δ_p. But it may not cause a high field in the space, leading to heating of steel structures, beams, columns or other equipment installed in the vicinity or step and touch voltages higher than permissible. This is a subject for further investigation and experiments need be conducted to establish that the field in the space is within reasonable limits. Otherwise the enclosure thickness may need to be increased slightly and the diameter reduced accordingly.

$$\text{Now, } R_{dc20} = \frac{(2.873 \times 10^{-6}) \, (1 \times 12 \times 2.54)}{\pi \times (59 - .27) \times 2.54 \times 0.27 \times 2.54}$$

$$= 0.273 \times 10^{-6} \; \Omega/\text{ft}$$

$$\text{and } R_{dc95}{}^{\dagger} = 0.273 \times 10^{-6} \, [1 + 3.96 \times 10^{-3} \times (95 - 20)]$$

$$= 0.273 \times 10^{-6}[1.297]$$

$$= 0.354 \times 10^{-6} \; \Omega/\text{ft}$$

and skin effect ratio from Figure 31.17

$$\text{for} \quad \sqrt{\frac{50 \times 10^3}{0.354}} \text{ or } 375.8$$

$$\text{and} \quad t/d = \frac{0.27}{59} = 0.0046$$

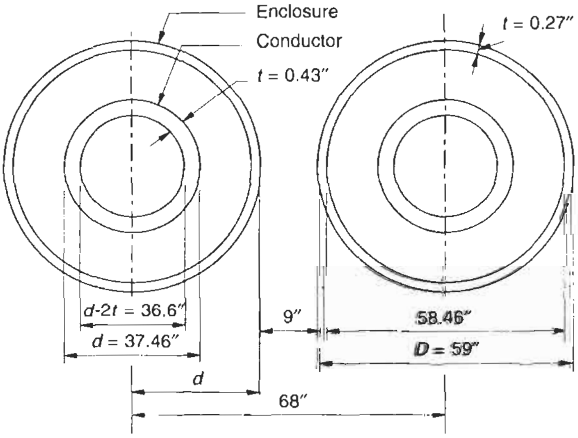

Figure 31.16 IPB conductor and enclosure for Example 31.1

---

[*] We have the conductor to be operating at its maximum permissible temperature, although it may be operating at less than this and generating less heat than assumed.

[†] Here also we have assumed the maximum operating temperature although the enclosure may be operating at less than this.

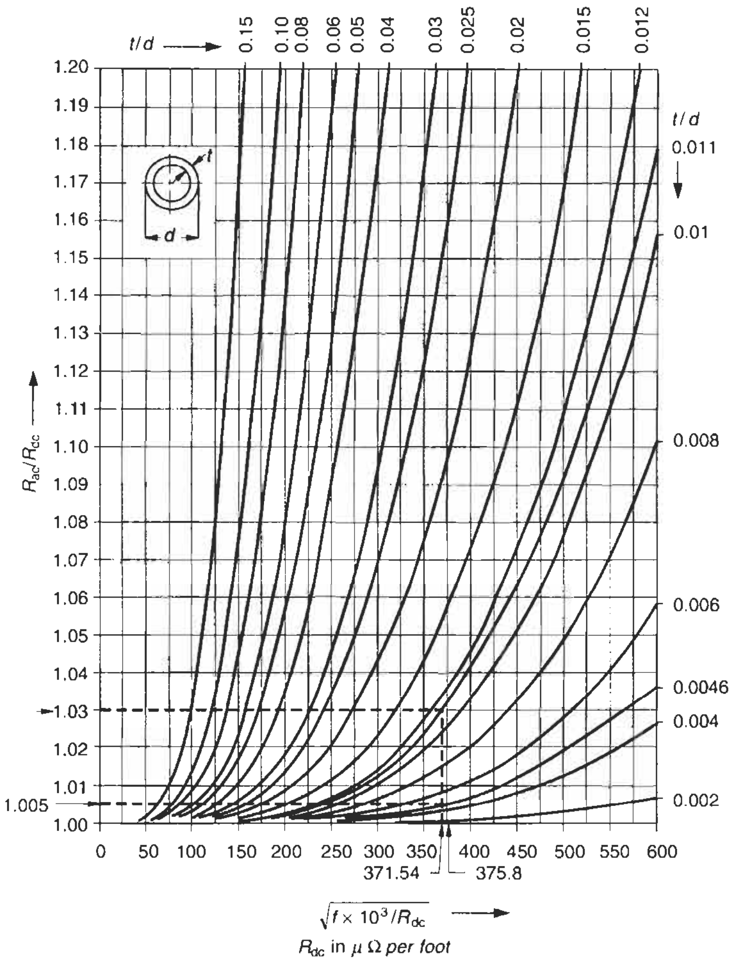

Note Figure 28.13(b) in Ω/1000 m is redrawn in μΩ/ft.

Figure 31.17 Curves for skin effect for isolated tubular conductors

∴ skin effect ratio $\simeq$ 1.005

∴ $W_2 = (0.98 \times 20\,000)^2 \times 0.354 \times 10^{-6} \times 1.005$

$= 136.67$ W/ft

(b) By solar radiation (W_s)

$W_s = k_a \cdot G \cdot A$ W/ft

where

$k_a = 0.65$

$G = 1100$ W/m^2 (for tropical areas)

$= \dfrac{1100}{3.28 \times 3.28}$ W/ft^2

$= 102.24$ W/ft^2

$A = 0.5 \times \dfrac{2223.12}{144}$ ft^2 (assuming only the upper 50% surface to be subjected to direct solar radiation)

$$\therefore \quad W_s = 0.65 \times 102.24 \times \left(\frac{0.5 \times 2223.12}{144}\right)$$

$= 512.98$ W/ft

∴ Total heat generated (within the enclosure)

$= 149.22 + 136.67 + 512.98$

$= 798.87$ W/ft

Suitability of the conductor

Heat dissipation by the conductor

(1) by Radiation

$$W_r = \frac{36.9}{10^{12}} \cdot e \cdot A_s\,[T_1^4 - T_2^4]\ \text{W/ft}$$

where

$e = 0.85$ (conductor is painted matt black with non-magnetic paint)

$A_s = 1411.49$ square inches

$T_1 = 105 + 273$

$= 378$°C

$T_2 = 95 + 273$

$= 368$

$$\therefore \quad W_r = \frac{36.9}{10^{12}} \times 0.85 \times 1411.49\,[378^4 - 368^4]$$

$$= 91.92 \text{ W/ft}$$

2 By convection

(i) From the outer surface

$$W_c = 0.0022\, A_s \frac{p^{0.5} \cdot \theta^{1.25}}{h^{0.25}} \text{ W/ft}$$

A_{so} = 1411.49 square inches

p = 1 (near sea level)

$\theta = 105 - 95 = 10^\circ\text{C}$

h = 37.46 inches

$$\therefore \quad W_c = 0.0022 \times 1411.49 \times \frac{10^{1.25}}{37.46^{0.25}}$$

$$= 22.32 \text{ W/ft}$$

(ii) From the inner surface*

A_{si} = 1379.09 square inches

$h = 37.46 - 2 \times 0.43 = 36.6$ inches

$$W_c = 0.0022 \times 1379.09 \times \frac{10^{1.25}}{36.6^{0.25}}$$

$$= 21.93 \text{ W/ft}$$

∴ Total heat dissipated

$= 91.92 + 22.32 + 21.93$

$= 136.17$ W/ft

as against the total heat generated of 149.22 watt/ft. The conductor chosen appears to be very close to the required size. Its diameter or thickness may be slightly modified to achieve thermal equilibrium and a more appropriate size.

3 By enclosure

(a) By radiation

$$W_r = \frac{36.9}{10^{12}} \cdot e \cdot A_s\,[T_1^4 - T_2^4] \text{ W/ft}$$

where

e = 0.65 (This is on a conservative side. For dull, non-magnetic matt finish painted surfaces, which such enclosures generally are, some manufacturers consider this factor up to 0.85)

A_s = 2223.12 square inches

$T_1 = 95 + 273$

$= 368^\circ$C

$T_2 = 48 + 273$

$= 321^\circ$C

$$\therefore \quad W_r = \frac{36.9}{10^{12}} \times 0.65 \times 2223.12\,[368^4 - 321^4]$$

$$= 411.76 \text{ W/ft}$$

(b) By convection (W_c)

$$W_c = 0.0022\, A_s \frac{p^{0.5} \cdot \theta^{1.25}}{h^{0.25}} \text{ W/ft}$$

where

A_s = 2223.12 square inches

p = 1 (near sea level)

$\theta = 95 - 48$

$= 47^\circ$C

h = 59 inches

$$W_c = 0.0022 \times 2223.12 \times \frac{1 \times 47^{1.25}}{59^{.25}}$$

$$= 217.17 \text{ W/ft}$$

∴ Total heat dissipated

$= 411.76 + 217.17$

$= 628.93$ W/ft

compared to the total heat generated of 798.87 W/ft.

Notes

1. If we assume the emissivity factor to be 0.85 the shortfall in the heat dissipation is nearly made up. However, it would be a matter of laboratory testing to establish the suitability of the enclosure section chosen. Otherwise the thickness of the enclosure may be slightly increased and the calculations repeated.
2. Add a suitable margin in the conductor's cross-section to account for the opening considered to dissipate the inside heat. Similarly, add a suitable margin in the enclosure's cross-section to account for the inspection windows.
3. In fact, it is the solar effect that is causing the maximum heat. The factors considered for the solar effect are also highly conservative. Nevertheless, a canopy over the outdoor part is advisable in the above case. This will ensure the same size of enclosure for the outdoor as well as the indoor parts and also eliminate the requirement for a thicker enclosure or a forced cooling arrangement. Now there will be no direct solar radiation over the bus system and the total solar effect can be eliminated, except for substituting the indoor ambient temperature of 48°C with the maximum outdoor temperature for the outdoor part of the bus system.
4. If we can overcome the solar effect, the size of the conductor and the enclosure can be reduced to economize their costs. Another exercise with reduced dimensions will be necessary for this until the most economical sections are established.
5. Once the required sizes of the conductor and the enclosure are established, one can choose the nearest economical sizes of the extruded sections available in the market, or have them specially manufactured if possible.

A design engineer will be the best judge of the best and the most economical design and extruded sections.

The above example is only for the outdoor part of the bus system. The indoor part, in any case, would be cooler than the outdoor one and will also provide a heat sink to the hotter enclosure and the conductor constructed outdoors. No separate exercise is therefore carried out for the indoor part of the bus system, for the sake of brevity. For a realistic design that would be essential. The above example provides a basic approach to the design of an IPB system. With some permutations and combinations, a more realistic and economical design can be achieved. A computer is necessary for this exercise.

---

*This dissipation of heat will not be applicable when the circular section is made of circular extruded sections which have no surface openings.

Relevant Standards

IEC	*Title*	*IS*	*BS*
60059/1999	Standard current ratings (Based on Renald Series R-10 of ISO-3)		
	Relevant US Standards ANSI/NEMA and IEEE		
ANSI/IEEE-C-37-23/1992	Metal enclosed bus and Guide for calculating losses in isolated phase bus		
ANSI/IEEE-C37.24/1998	Guide for evaluating the effect of solar radiation on outdoor metal enclosed switchgear		

Notes

1 In the tables of Relevant Standards in this book while the latest editions of the Standards are provided, it is possible that revised editions have become available. With the advances of technology and/or its application, the updating of Standards is a continuous process by different Standards organizations. It is therefore advisable that for more authentic references, readers should consult the relevant organizations for the latest version of a Standard.

2 Some of the BS or IS Standards mentioned against IEC may not be identical.

3 The year noted against each Standard may also refer to the year of its last amendment and not necessarily the year of publication.

List of formulae used

Constructional features

Continuous or bonded enclosures

$$\phi_{\text{space}} \propto (\overline{I_r} - \overline{I_e}) \qquad (31.1)$$

ϕ_{space} = magnetic field in space
I_r = conductor current
I_e = enclosure current

Enclosure heating

Total heat generated = $W_1 + W_2 + W_s^*$ (31.2)

in watts per unit length. (*only for the outdoor parts)

W_1 = heat generated in the conductor
W_2 = heat generated in the enclosure
W_s^* = heat generated due to solar radiation

For tubular conductors

$$R_{\text{dc20}} = \frac{\rho l}{\pi \cdot \mathrm{d}_m \cdot t} \text{ in } \Omega/\text{m or } \mu\Omega/\text{ft} \qquad (31.3)$$

(in MKS or FPS units, depending upon the system adopted)

ρ = resistivity of metal at 20°C in Ωm or in μΩ cm
d_m = mean diameter of the tube in m or cm
t = thickness of the tube in m or cm
l = length of the conductor in m or cm

$$R_{\text{dc}\theta} = R_{\text{dc20}}[1 + \alpha_{20}\,(\theta - 20)] \qquad (31.4)$$

$R_{\text{dc}\theta}$ = d.c. resistance of the conductor at the operating temperature
α_{20} = temperature resistance coefficient of the metal at 20°C per °C

Skin effect in a tubular conductor

$$\delta_p = \frac{1}{2\pi}\sqrt{\frac{\rho}{\mu f}} \qquad (31.5)$$

d_p = depth of penetration in mm
ρ = resistivity of the metal in e.m.u.
f = frequency of the system in Hz
μ = effective permeability of the medium, in which the field exists and will depend upon the electric field induced in the enclosure
= 1 for non-magnetic materials

Thickness of enclosure

For minimum losses,

$$\frac{\text{Thickness of tubular conductor } (t)}{\text{Depth of penetration } (\delta_p)} = \pi/2$$

or

$$t = \frac{\pi}{2}\,\delta_p \qquad (31.6)$$

Solar radiation

$$W_s = k_a \cdot G \cdot A \text{ W/ft} \qquad (31.7)$$

k_a = coefficient of absorption
G = global solar radiation
A = area of the enclosure, that is exposed to the sun

Natural cooling of enclosures

By radiation

$$W_r \simeq \frac{36.9}{10^{12}} \cdot e \cdot A_s\,[T_1^4 - T_2^4] \text{ W/ft} \qquad (31.8)$$

e = coefficient of emissivity, expressed by the condition of the surface of the hot body

A_s = effective surface of radiation per foot of enclosure length in square inches

T_1 = absolute temperature of the hot body

= $(\theta_s + 273)$°C (θ_s = enclosure surface temperature in °C)

T_2 = absolute ambient temperature

= $(\theta_a + 273)$°C (θ_a = ambient temperature in °C) (For conductors, the enclosure temperature will become their ambient temperature).

By convection

$$W_c \simeq 0.0022 \cdot A_s \cdot \frac{P^{0.5} \cdot \theta^{1.25}}{h^{0.25}} \text{ W/ft} \qquad (31.9)$$

A_s = effective surface area per foot of enclosure length – in square inches

P = air pressure in atmospheres

= 1 at sea level

θ = temperature rise of the enclosure above the ambient temperature in °C

h = width of flat or bar mounted in a vertical plane, or the diameter of a round conductor in inches

Further reading

1 Albright, R.H., Bates, A.C., Conanagla, A. and Owens, J.B., 'Isolated-phase metal enclosed conductors for large electric generators', *Trans. IEEE*, **81**, February, 1067–72 (1963).

2 Ashdown, K.T. and Swerdlow, N., 'Cantilever-loaded insulators for isolated phase bus', AIEE paper, April (1954).

3 Buchanan, G.E., 'Lab field test experience with high capacity isolated-phase bus', *Trans. IEEE*, **78**, October, 925–931 (1959).

4 Conangla, A.C., 'Heat losses in isolated phase enclosure', *AIEE Trans.* June, 309–313 (1963).

5 Conangla, A. and White, H.E., 'Isolated-phase bus enclosure loss factors', *Trans. IEEE*, **87**, August, 1622–1628 (1968).

6 Dwight, H.B., 'Theory for proximity effects in wires, thin tubes and sheaths', *AIEE Trans.* **42** (1923).

7 Dwight, H.B., 'Some proximity effects formulae for bus enclosures', *Trans. IEEE*, **83**, December 1167–1172 (1964).

8 Dwight, H.B., 'Proximity effect formulae for bus enclosures', *Trans. IEEE*, **87**, August, 1622–1628 (1968).

9 Dwight, H.B., Andrews, G.W. and Tileston Jr H.W., 'Temperature rise of busbars', *General Electric Review*, May (1940).

10 Elgar, E.C., Rehder, R.H. and Sverdlow, N., 'Measured losses in isolated-phase and comparison with calculated values', *Trans. IEEE*, **87**, August, 1724–1730 (1968).

11 Gupta, C.P., and Prakash, R., *Engineering Heat Transfer*, Nemchand Bros, Roorkee, India.

12 IEEE Committee, 'Proposed guide for calculating losses in isolated phase bus', *Trans. IEEE*, **87**, August, 1730–1737 (1968).

13 Jain, M.P., *Proximity Effects of Busbars*, ME thesis, Electrical Engineering Department, University of Roorkee, Roorkee, India (1969).

14 Jain, M.P. and Ray, L.M., 'Field pattern and associated losses in aluminium sheet in presence of strip busbar', *Trans. IEEE*, **89**, September/October, 1525–1539 (1970).

15 Jain, M.P. and Ray, L.M., 'An experimental study of proximity effects of busbars', *Journal of Institution of Engineers (India)*, **51**, No. 12, Part EL–6, August, 341–350 (1971).

16 Mankoff, L.L., Sverdlow, N. and Wilson, W.R., 'An analogue method for determining losses in isolated-phase bus enclosures', *Trans. IEEE*, **82**, August, 532–542 (1963).

17 Niemoller, A.R., 'Isolated-phase bus enclosure currents', *Trans. IEEE*, **87**, August, 1714–1718 (1968).

18 Paulus, C.F. and Bellack, J.H., 'Progress in generator leads: Economical application of forced cooling', *Trans. IEEE*, **88**, February, 175–180 (1969).

19 Poritsky, H. and Jerrard, R.P., 'Eddy current losses' *Trans. AIEE*, Part I, **73**, May, 97–108 (1954).

20 Sebold, G.K., 'Induced current, in supporting steel for 10 000 Ampere generator open bus', *Trans. IEEE*, 642–647 (1960).

21 Skeats, W.F. and Sverdlow, N., 'Minimising the magnetic filed surrounding isolated phase bus by electrically continuous enclosures', *AIEE Trans.* No. 62 (1962).

22 Skeats, W.F. and Sverdlow, N., 'Minimising the magnetic field surrounding isolated phase bus by electrically continuous enclosures', *Trans. IEEE*, **81**, February, 655–657 (1963).

23 Stratton, J.A., *Electromagnetic Theory*, McGraw-Hill, New York (1941).

24 Sverdlow, N. and Buchta, M.A., 'Practical solution of induction heating problems resulting from high current buses', *Trans. IEEE*, **78**, 1736–1742 (1959).

25 Wilson, W.R. and Mankoff, L.L., 'Short circuit forces in isolated phase buses, *AIEE Trans.*, April (1954).

32

Testing a Metal-enclosed Bus System

Contents

Testing a bus system is generally along similar lines to those for a switchgear assembly, discussed in Chapter 14. In this chapter we discuss additional tests that are specifically for a metal-enclosed bus system.

32.1 Philosophy of quality systems

This has been covered in Section 11.1.

32.1.1 Quality assurance

To fulfil the quality requirements, the material inputs going into the making of a bus system must be properly checked as soon as they are received,

- Aluminium or copper sections and sheets (for their cross-sectional areas, thickness of sheet, surface finish, bending properties and conductivity etc.)
- Hardware (for proper size, quality of threads and tensile strength etc.)
- Insulators and supports (for sizes and quality of material)
- Other materials, components or equipment used for making, inter-connections and bondings of such systems
- Cooling systems (in large current rating systems).

All these items must be properly checked and recorded according to the manufacturer's internal quality checks and formats before they are used in the manufacture of a bus system. This will eliminate any inconsistency in a material or component at the initial stage. Similarly, stage inspections are necessary during the course of manufacturing to ensure quality at every stage and to eliminate incorrect construction and assembly or poor workmanship. And thus assure a product of desired specifications and quality.

32.1.2 Purpose of testing

The purpose of testing of a bus system is to ensure its compliance with design parameters, material inputs and manufacturing consistency.

32.2 Recommended tests

The following are the recommended tests that may be carried out on a completed bus duct, as in IEC 60298, ANSI C-37/20C, IEC 60694 and BS 159 for both LT and HT systems.

32.2.1 Type tests

Type tests are conducted on the first assembly (bus system) of each voltage, current rating and fault level to demonstrate compliance with the electrical and constructional design parameters. The tests provide a standard reference for any subsequent assembly with similar ratings and constructional details. The following tests are conducted:

1 Verification of insulation resistance or measurement of the leakage current, both before and after the dielectric test
2 Verification of dielectric properties:
  (i) Power frequency voltage withstand or HV test
  (ii) Impulse voltage withstand test for system voltages 2.4 kV and above
3 Verification of temperature rise limits (for rated continuous current capacity)
4 Verification of short-circuit strength:
  (a) For straight lengths and tap-offs
  (b) For the tap-offs in a power-generating station, connecting a UAT through the main bus section between the generator and the generator transformer.
  (c) For the ground bus in isolated phase bus (IPB) systems
5 Verification of momentary peak or dynamic current
6 Verification of protective circuit
7 Verification of clearance and creepage distances
8 Verification of degree of protection:
  (a) Enclosure test
  (b) Watertightness test – for all outdoor parts of any bus system (but for outdoor as well as indoor parts for isolated phase bus (IPB) systems)
  (c) Air leakage test, for isolated phase bus (IPB) systems
9 Measurement of resistance and reactance
10 Endurance of trunking system with trolley type tap-off facilities
11 Additional test on an IPB enclosure for radio interference as in NEMA-107. The maximum radio influence voltage (RIV) should not exceed 100 μV at 1000 kHz. For test equipment and test procedure refer to the Standard.

32.2.2 Routine tests

Routine tests are conducted on each completed bus system, irrespective of voltage, current, fault level and constructional details and whether or not it has undergone type tests. The following will form routine tests:

1 To check for any human error
2 General inspection of the bus assembly
3 Inspection of electrical wiring if there is any (such as for space heaters, cold or hot air blowing, enclosure pressurizing or any other protective circuit)
4 Verification of insulation resistance or measurement of the leakage current, both before and after the dielectric HV test
5 Verification of dielectric properties – limited to power frequency voltage withstand test or HV test
6 Additional tests for an IPB system are:
  (a) Partial discharge test: On all cast resin components such as instrument transformers, bushings and insulators to ensure that the insulation is free from defects and voids.
  (b) Checking of welded joints: as in GDCD-198, norms for aluminium welding (CEGB, UK)*: All shop-

---

*Central Electricity Generating Board, UK.

welded joints will be subjected to dye penetration examination and 10% of butt-welded joints, including joints on flexibles, enclosures and conductors, will be subjected to radiographic (X-ray) examination.

32.2.3 Seismic disturbances

In Section 14.6 we have provided a brief account of such disturbances as well as the recommended tests and procedures to verify the suitability of critical enclosures and bus systems for locations that are earthquake-prone. For this the user is required to provide the manufacturer with the intensity of seismic effects at site of the installation in the form of response spectra (RS). (See Section 14.6.)

32.2.4 Field tests

These are to be conducted after the installation and before energizing the bus assembly at site:

1 Checking for any human error
2 Visual inspection of the bus assembly
3 Inspection of electrical wiring if there is any (such as for space heaters, cold or hot air blowing or enclosure-pressurizing or any other protective circuit)
4 Verification of insulation resistance or measurement of the leakage current, both before and after the dielectric HV test, if the HV test is to be carried out.
5 Verification of dielectric properties – limited to power frequency voltage withstand or HV test (usually not recommended)
6 Watertightness and air leakage test for isolated phase bus systems.

32.3 Procedure for type tests

Below we briefly outline the procedure for conducting type tests at the manufacturer's works.

32.3.1 Verification of insulation resistance or measurement of the leakage current

The procedure and test requirements will remain the same as that discussed in Section 14.3.2, for metal-enclosed switchgear and controlgear assemblies.

32.3.2 Verification of dielectric properties

Power frequency voltage withstand or HV test

The procedure will be the same as that discussed for switchgear assemblies (Section 14.3.3). The test voltage may be applied for one minute as shown in Tables 32.1(A) or (B) for series I and Table 32.2 for series II voltage systems. Any disruptive discharge or insulation breakdown during the application of high voltage will be considered to be dielectric failure.

The tap-offs in a power-generating station connecting a UAT through the main bus section between the generator and the generator transformer which are under the cumulative influence of two separate power sources, must be subjected to a higher withstand voltage as prescribed by IS 8084 and indicated in column 4, Table 32.1(A).

32.3.3 Impulse voltage withstand test (for system voltages 2.4 kV and above)

The procedure for testing will be the same as that discussed for switchgear assemblies in Section 14.3.4. The impulse test voltage is applied as in Table 32.1(A) for series I and Table 32.2, for series II voltage systems with a full wave standard lightning impulse of 1.2/50 (Section 17.6.1). There should be no disruptive discharge or insulation breakdown.

32.3.4 Verification of temperature rise limits (or rated continuous current capacity)

(Recommended for systems having a current rating of more than 400 A)

This will be carried out under similar parameters of room condition and the type of test voltage wave to those for a switchgear assembly (Section 14.3.5). The current in each phase should be within 2% of the specified test value (rated current).

For LT bus systems: The length of the test piece will be a minimum 6 m as in IEC 60439-2 with at least one joint. The joints must be both in the conductor and in the enclosure in each phase. If the total length of the bus section is less than specified, the entire length of the bus system in the fully assembled form will then be tested.

For HT bus systems: The entire length of the bus system manufactured for a particular installation in the fully assembled form will be tested. Each end of the bus enclosure will be properly sealed to eliminate any heat leakage.

The bus sample is located 600 mm above floor level. The ambient temperature should be within 10–40°C as measured by the average value of at least four thermometers, two placed on each side of the enclosure on the centre line, at least 300 mm from it, and 600 mm from the ends. The bus sample must be a three-phase unit as well as the test equipment for a three-phase system to account for the proximity effect. This effect will not be reflected if a three-phase system is tested on a single-phase one. Similarly, a single-phase unit and single-phase test equipment should be used for a single-phase system (such as from the neutral side of the generator up to the neutral grounding transformer). The test will be conducted at the rated current until a near-stable condition is reached and three successive readings at not less than one-hour intervals for an LT system and 30 minutes for an HT system do not show a maximum variation of more than 1°C. To shorten the test, the current may be increased during the initial period. The test may be conducted at a reduced voltage, as the emphasis is on heating due to current. For a successful test, the hottest spot temperature should not exceed the values in Table 32.3.

Table 32.1(A) For series I voltage systems: Insulation levels, power frequency and impulse withstand voltages for metal-enclosed bus systems

Nominal system voltage	*Rated max. system voltage*	*One-minute power frequency voltage withstand at a frequency between 45 and 65 Hz for LT and 25 and 100 Hz for HT systems*		*Standard lightning impulse, 1.2/50 μs voltage withstand (phase to ground)*
1	*2*	*3*	*4*	*5*
		For a switchgear assembly and a bus system (phase to ground)	For the tap-offs in a power-generating station, connecting a UAT through the main bus section between the generator and the generator transformer (Figure 31.1) (phase to ground)	(a) We consider here only List II, which is more prevalent. For List I, refer to Table 13.2. (b) For impulse voltage withstand across the contact gaps of an interrupting device refer to IEC 60694
kV (r.m.s.)	kV (r.m.s.)	kV (r.m.s.)	kV (r.m.s.)	kV (peak)
0.415	0.44	2.5	–	–
0.6	0.66	2.5	–	–
3.3	3.6	10	21	40
6.6	7.2	20	27	60
11	12	28	35	75
15	17.5	38	–	95
22	24	50	55	125
33	36	70	75	170

Based on IEC 60439-2 LT, IEC 60694 for HT and IS 8084 for tap-offs.

Notes

1 Generally, there is no application of a bus system beyond a maximum system voltage of 36 kV.

2 Field tests (power frequency voltage withstand) after erection at site, if required, may be conducted at 85% of the values indicated above in LT and 80% in HT systems.

Table 32.1(B) For series I voltage systems: Power frequency voltage withstand levels for metal-enclosed bus systems

Nominal system voltage V_r	*Rated maximum system voltage*	*One-minute power frequency withstand voltage at any frequency between 25 and 100 Hz (phase to ground)*	*Field test after erection at site (phase to ground)*	
			A.C. test (for one minute at any frequency between 25 and 100 Hz)	*D.C test*[a]
1	*2*	*3*	*4*	*5*
kV (r.m.s.)	kV (r.m.s.)	kV (r.m.s.)	kV (r.m.s.)	kV
0.415	0.44	2.0	2.0	3.0
0.6	0.66	2.0	2.0	3.0
3.3	3.6	9.5	8.6	5.0
6.6	7.2	17.0	15.2	10.5
11	12	27.0	24.0	18.0
15	17.5	36.0	32.0	25.0
22	24	52.0	46.0	37.5
33	36	76.0	68.0	60.0
			($2V_r + 2$) for HT systems	

Based on BS 159

[a] In the absence of a.c. test voltage at site, a d.c. test can also be conducted, the duration of which will be 15 minutes.

Table 32.2 For series II voltage systems: Insulation levels, power frequency and impulse withstand voltages for metal-enclosed bus systems

Nominal system voltage	*Rated maximum system voltage*	*One-minute power frequency voltage withstand at a frequency not less than the rated, 60 Hz (phase to ground)*		*Standard lightning impulse (1.2/50 μs) voltage withstand (phase to ground)*	*One-minute d.c. voltage withstand (phase to ground)*
1	*2*	*3*		*4*	*5*
kV (r.m.s.)	kV (r.m.s.)	kV (r.m.s.)		kV (peak)	kV
		Dry (1 minute)	Dew (10 seconds)		
0.6	0.635	2.2	–	–	3.1
4.16	4.76	19.0	15.0	60	27.0
13.8	15.00	36.0	24	95	50.0
14.4	15.50	50.0	30	110	70.0
23.0	25.80	60.0	40	125	1
34.5	38.00	80.0	70	150	
69.0	72.50	160.0	140	350	
For application of isolated phase bus to generator, the following voltage ratings will apply.					
14.4 to 24[2]	–	50.0	50.0	110	70

Notes

1 (a) The procedure for a d.c. test is the same as for an a.c. one. Due to variable voltage distribution encountered when conducting d.c. tests, the ANSI Standard recommends that the matter be referred to the manufacturer for system voltages 25.8 kV and above.

(b) For a power frequency voltage withstand test a d.c. test is generally not recommended on a.c. equipment, unless only d.c., test voltage is available at the place of testing. The d.c. test values, as above, are therefore for such eventualities only and are equivalent to power frequency a.c. voltage withstand test values.

2 These ratings are applicable to generators which are directly connected to the transformers without intermediate breakers and where adequate surge protection is provided. The requirements are in line with or in excess of the required withstand values of the generator.

3 Field tests after erection at site, if required, may be conducted at 75% of the values indicated above. Also refer to field tests (Table 14.8).

Table 32.3 Hottest spot temperature rise limits for metal-enclosed bus systems

Component	*Limit of hottest spot temperature rise over an ambient of 40°C* – in °C	
	As in IEEE-C37.20 (Table 28.2)	*As in IEC-60439-2 (Table 14.5)*
1 Bus conductors		
(i) Bolted plain joints	30[a]	50
(ii) Bolted joints silver plated	65[b]	65[b]
(iii) Aluminium welded joints	65[b]	65[b]
2 Enclosure and support structures		
(i) Easily accessible	40	30[c]
(ii) Not accessible	70	50
3 Bus conductors in contact with insulating materials	50[d]	50[d]
	(or higher, as limited by insulation class, Table 14.6[e])	
4 Terminations at generator or transformer end	Same as for bus conductors noted above	
5 Termination at cables with plain connections	30	50[d]
6 Termination at cables with silver surfaced for equivalent connections	45	50[d]

Notes

[a] A very low temperature rise at the main joints is a measure to prevent the joints from overheating due to corrosion.

[b] Unless limited by insulation (e.g. for a class *Y* insulation, Table 14.6) this will be 50.

[c] If the enclosure and covers not to be touched during normal operation the temperature rise limit can be considered to be 40°C.

[d] For the class of insulation, not supposed to exceed a total temperature of 90°C during normal operation.

[e] Subject to the insulation class of the cables.

Effect of solar radiation

The effect of solar radiation must be considered in the outdoor part of a bus enclosure exposed to solar heat. This effect may be observed for all LT and HT bus enclosures, as all are influenced equally by such radiations, particularly IPB enclosures, as discussed in Section 31.4.4.

32.3.5 Verification of short-circuit strength

For straight lengths and tap-offs

The test procedure is generally the same as that discussed for switchgear assemblies (Section 14.3.6). It is carried out on a similar section to that used for the temperature rise test and the power supply can be single-phase or three-phase. If three-phase, the bus conductors are shorted at one end while the other ends are connected to the power source. If a single-phase power is used, the circuit should be so arranged that the current flows through the two adjacent phase conductors. The force due to a three-phase fault would be approximately 86.6% of this. Therefore, for single-phase tests, the current would be $\sqrt{86.6}$ or approximately 93% of that prescribed in Table 13.10. The test results should show no sign of undue deformation. Slight deformation may be acceptable, provided that the clearance and the creepage distances are complied with and the degree of protection is not impaired. The insulation and mounting supports, however, must show no signs of deterioration.

For the tap-offs in a power-generating station, connecting a UAT through the main bus section between the generator and the generator transformer

As discussed in Section 13.4.1(5), these sections are under the cumulative influence of two power sources and may be tested for a higher short-time rating, which would be the algebraic sum of the two fault levels, one of the generator and the other of the generator transformer as noted in Table 13.8. Also refer to Figures 31.1 and 13.18 for more clarity.

For the ground bus

In an isolated phase bus (IPB) system, the ground bus must be capable of carrying the same short-time current as for the main conductors for 2 seconds, for both discontinuous and continuous grounding systems.

32.3.6 Verification of momentary peak or dynamic current

The test method and test results will generally be the same as for a switchgear assembly, discussed in Section 14.3.7.

For the tap-offs, connecting a UAT through the main bus section between the generator and the generator transformer, however, as discussed above, the momentary peak current will depend upon the short-time rating of such tap-offs. The likely ratings are noted in Table 13.8.

32.3.7 Verification of protective circuits

All the protective circuits will be checked for continuity and operational requirements.

32.3.8 Verification of clearance and creepage distances

The clearance will be verified as in Table 28.4 while for creepages Table 28.5 may be followed.

32.3.9 Verification of degree of protection

Enclosure test

The types of protection and their degree are generally the same as those defined for motors in Section 1.15, Tables 1.10 and 1.11. The test requirements and methods of conducting such tests are also almost the same as for those motors, discussed in Section 11.5.3.

Watertightness test

This test is applicable to all outdoor parts of any bus system and on both indoor and outdoor parts of an isolated phase bus (IPB) system. Each enclosure to be tested (such as the enclosure of one phase in an isolated phase bus system) should be complete in all respects with all its fittings and mounts in place. The length of the testpiece must be the same as that considered for the temperature rise test (Section 32.3.4).

As ANSI C-37/20C and IS 8084 water under a head of 11 m through a hose of 25 mm diameter held at 3 m from the enclosure will be impinged at an angle of at least 45° from the horizontal on all sides and the entire length of the enclosure for a period of 5 minutes. No water should enter the enclosure.

Air leakage test

This test is prescribed by ANSI C-37/20C for isolated phase bus systems after they have been assembled at site. The test is conducted by filling the enclosure with air up to a pressure of 15 cm of water (1500 N/m^2). After the air supply is shut off, the pressure must not drop to less than 7.5 cm of water in 15 seconds. All breathers and drain holes must be sealed before the test.

32.3.10 Measurement of resistance and reactance

The mean values of the resistance and reactance per phase are determined on at least two trunking units, including the joints, from a total length of 6 m. If the total length of the bus section is less than this, the values may be determined on the entire length of the bus system.

If Vd_1, Vd_2 and Vd_3 are the voltage drops in the three phases, then the average voltage drop

$$Vd = \frac{Vd_1 + Vd_2 + Vd_3}{3} \text{ volts per phase and}$$

$$\text{average current } I_{ph} = \frac{I_R + I_Y + I_B}{3} \text{ Amps per phase}$$

where I_R, I_Y, I_B are the phase currents in the three phases

$$\therefore \text{ Impedance, } Z = \frac{V_d}{I_{ph} \cdot L} \ \Omega \text{ per phase/m}$$

$$\text{and} \quad R = \frac{P}{3I_{ph}^2 \cdot L} \ \Omega \text{ per phase/m}$$

$$\text{and} \quad X = \sqrt{Z^2 - R^2} \ \Omega \text{ per phase/m}$$

where
P = total power input in watts
L = length of the bus section on which the voltage drop has been measured in metres

32.3.11 Endurance of trunking system with trolley-type tap-off facilities

This test is generally applicable to an LT overhead busbar system or rising mains which have sliding-type plug-in boxes for outgoing terminations (Figures 28.3 and 28.4(a)). The sliding contacts carrying their rated current at rated voltage must be able to operate at least 10 000 times to and fro with the trunking conductors. A successful test should reveal no mechanical or electrical defect such as pitting, burning or welding of contacts.

32.4 Routine tests

The tests against step numbers 1, 2 and 3 are of a general nature and no test procedure is prescribed for these. The remainder have already been covered under type tests. The procedure for tests and the requirements of the test results will remain the same as for the type tests.

32.5 Field tests

These are generally the same as the routine tests. No field test as regards the power frequency voltage withstand or HV test is normally prescribed on a bus system, which has already been tested at the manufacturer's works. Repeated application of high voltage may deteriorate the insulating properties of the insulation system and its life unless modification has been carried out at site or where the insulation of joints between the busbars can be completed only after erection at site. In such cases, if this test becomes essential it can be conducted,

- At 85% of the test values in Table 32.1(A) for LT systems, applied for 1 minute.
- Or at 80% of the test values for HT systems for 1 minute.
- Or a d.c. voltage as in Table 32.1(B) applied for 15 minutes as in IS 8084.
- Or at 75% of the test values in Table 32.2, for series II voltage systems according to ANSI C-37/20C.

Note
If it is not possible to carry out the test at 75%, 80% or 85% of the test values, as prescribed above or for some reasons the test duration may have to be increased by more than one minute, then it is permissible for the test voltage to be further reduced to suit the site and instead, the test duration increased The reduced test voltages for longer test durations are provided in Table 14.8.

Relevant Standards

IEC	*Title*	*IS*	*BS*
60298/1990	A.C. metal enclosed switchgear and controlgear for rated voltages above kV and up to and including 52 kV	3427/1991	BS EN 60298/1996
60439-2/1987	Specification for low voltage switchgear and controlgear assemblies Particular requirements for busbars trunking systems (busways)	8623-2/1993	BS EN 60439-2/1993
60694/1996	Common specifications for high voltage switchgear and controlgear Standards	3427/1991	BS EN 60694/1997
	Specification for high voltage busbars and busbar connections	8084-1992	BS 159/1992

Relevant US Standards ANSI/NEMA and IEEE

NEMA 107/1993	Method of measurement of Radio Influence Voltage (RIV) of HV apparatus
ANSI/IEEE-C-37-23/1992	Metal enclosed bus and Guide for calculating losses in isolated phase bus.
ANSI/IEEE-C37.24/1986	Guide for evaluating the effect of solar radiation on outdoor metal enclosed switchgear

Notes
1 In the tables of Relevant Standards in this book while the latest editions of the Standards are provided, it is possible that revised editions have become available. With the advances of technology and/or its application, the updating of Standards is a continuous process by different Standards organizations. It is therefore advisable that for more authentic references, readers should consult the relevant organizations for the latest version of a Standard.
2 Some of the BS or IS Standards mentioned against IEC may not be identical.
3 The year noted against each Standard may also refer to the year of its last amendment and not necessarily the year of publication.

Index

Industrial Power Engineering and Applications Handbook

K. C. Agrawal

Industrial Power Engineering and Applications Handbook is designed for the electrical power engineer or electrical engineering student who needs a single source reference guide to every subject contained within that discipline. It covers a huge range of topics from electric motors and generators to switchgear and transformers, capacitors, cabling and buses as well as testing and installation requirements. Each subject is covered comprehensively from theory to practice with relevant examples and details on all relevant international standards including ISO, IEEE, ANSI, NEMA, BS-EN, DIN and of course IEC. There are also details of design, use and maintenance techniques that will make the book of vital interest to engineers responsible for plant power generation and supply in any industry.

Never before has so much ground been covered in a single volume reference source. This book is sure to be of great value to students, technicians and practising engineers as well as equipment designers and manufacturers, and should become their one-stop shop for all information needs in this subject area.

Newnes Power Engineering Series
Electronic Control in Electrical Systems Acha, Agelidis, Anaya & Miller 0-7506-5126-1
Industrial Power Engineering and Applications Handbook Agrawal 0-7506-7351-6

Power Engineering titles from Newnes
Electrical Engineer's Reference Book Jones, Laughton & Say 0-7506-1202-9
Newnes Electrical Engineering Handbook Warne 0-7506-4879-1
J&P Transformer Book, 12th ed Heathcote 0-7506-1158-8
Transmission and Distribution Electrical Engineering Bayliss 0-7506-4059-6
Electrical Power Systems Technology Fardo & Patrick 0-7506-9722-9
High Voltage Engineering Fundamentals Kuffel, Zaengl & Kuffel 0-7506-3634-3
Industrial Brushless Servomotors Moreton 0-7506-3931-8
High Voltage Test Techniques Kind & Feser 0-7506-5183-0

Cover image courtesy of Digital Stock.

Newnes
An imprint of Butterworth-Heinemann
http://www.newnespress.com

ISBN 0-7506-7351-6
9 780750 673518