3RD
EDITION

The Wiley Encyclopedia of
PACKAGING TECHNOLOGY

Edited by Kit L. Yam

WILEY

THE WILEY

ENCYCLOPEDIA OF PACKAGING TECHNOLOGY

THIRD EDITION

EDITED BY
KIT L. YAM

WILEY
A John Wiley & Sons, Inc., Publication

THE WILEY

ENCYCLOPEDIA OF PACKAGING TECHNOLOGY

THIRD EDITION

THE WILEY ENCYCLOPEDIA OF PACKAGING

Editor-in-Chief
Kit L. Yam

Editorial Board
George Ardnt
Schreiber Foods Inc.

William Armstrong
Sealed Air Corp.

Vivek Chougule
Printpak

Kay Cooksey
Clemson University

Gilles Doyon
Agriculture and Agri-Food Canada

James Fagan
R&DA for Military Food & Packaging Systems

Bradley Finnigan
Precision Fabrics Group

Edwin Ho
OSI Industries

Howard Leary
Luciano Packaging Technologies

Dong Sun Lee
Kyungnam University
Korea

Doug Lilac
Johnson & Johnson

LinShu Liu
USDA ARS ERRC

Ken Marsh
Kenneth S. Marsh & Associates

Nazir Mir
Perftech

Ben Miyares
Packaging Machinery Manufacturers Institute (PMMI)

Barry A. Morris
DuPont Packaging and Industrial Polymers

Gregory V. Pace
Sun Chemical Corporation

Spyros Papadakis
Technological Educational Institution of Athens,
Greece

Luciano Piergiovanni
University of Milan, Italy

Ron Puvak
Agr*Topwave & Agr International

Gordon L. Robertson
Food · Packaging · Environment
Australia

Diana Twede
Michigan State University

Paul J. Zepf
Zarpac Inc, Canada

Editorial Staff
Vice-President and Director: **Janet Bailey**

Executive Editor: **Arza Seidel**

Managing Editor: **Michalina Bickford**

Editorial Program Coordinator: **Mary Mann**

Production Manager: **Shirley Thomas**

Senior Production Editor: **Kris Parrish**

Illustration Manager: **Dean Gonzalez**

THE WILEY

ENCYCLOPEDIA OF PACKAGING TECHNOLOGY

THIRD EDITION

EDITED BY
KIT L. YAM

WILEY

A John Wiley & Sons, Inc., Publication

Copyright © 2009 by John Wiley & Sons, Inc. All rights reserved.

No part of this publication may be reproduced, stored in a retrieval system, or transmitted in any form or by any means, electronic, mechanical, photocopying, recording, scanning, or otherwise, except as permitted under Section 107 or 108 of the 1976 United States Copyright Act, without either the prior written permission of the Publisher, or authorization through payment of the appropriate per-copy fee to the Copyright Clearance Center, Inc., 222 Rosewood Drive, Danvers, MA 01923, 978-750-8400, fax 978-750-4470, or on the web at www.copyright.com. Requests to the Publisher for permission should be addressed to the Permissions Department, John Wiley & Sons, Inc., 111 River Street, Hoboken, NJ 07030, 201-748-6011, fax 201-748-6008, or online at http://www.wiley.com/go/permission.

Limit of Liability/Disclaimer of Warranty: While the publisher and author have used their best efforts in preparing this book, they make no representations or warranties with respect to the accuracy or completeness of the contents of this book and specifically disclaim any implied warranties of merchantability or fitness for a particular purpose. No warranty may be created or extended by sales representatives or written sales materials. The advice and strategies contained herein may not be suitable for your situation. You should consult with a professional where appropriate, Neither the publisher nor author shall be liable for any loss of profit or any other commercial damages, including but not limited to special, incidental, consequential, or other damages.

For general information on our other products and services or for technical support, please contact our Customer Care Department within the United States at 877-762-2974, outside the United States at 317-572-3993 or fax 317-572-4002.

Wiley also publishes its books in a variety of electronic formats. Some content that appears in print may not be available in electronic formats. For more information about Wiley products, visit our web site at www.wiley.com.

Library of Congress Cataloging-in-Publication Data:

The Wiley encyclopedia of packaging technology/edited by Kit L. Yam. – 3rd ed.
p. cm.
Includes index.
ISBN 978-0-470-08704-6 (cloth)
1. Packaging–Dictionaries. I. Yam, Kit L. II. Title: Encyclopedia of packaging technology. III. Title: Packaging technology.
TS195.A2W55 2009
688.803–dc22 2009021663

Printed in the United States of America

10 9 8 7 6 5 4 3 2 1

CONTRIBUTORS

Timothy Aidlin, *Aidlin Automation,* Air Conveying
Michael G. Alsdorf, *Extrusion Group, Egan Machinery,* Extrusion Coating
Julia Anderson, *National Paperbox and Packaging Association,* Boxes, Rigid, Paperboard
Jim Arch, *Scholle Corporation, Agriculture & Agri-Food Canada, Ministry,* Bag-In-Box, Liquid Product
George W. Arndt Jr., *Schreiber Foods Inc.,* Leak Testing
B. W. Attwood, *St. Annes Paper and Paperboard Developments Ltd.,* Paperboard
Rafael Auras, *School of Packaging, Michigan State University,* Poly (lactic acid)
Robert Bakish, *Bakish Materials Corporation,* Metallizing, Vacuum
R. F. Bardsley, *Bard Associates,* Form/Fill/Seal, Horizontal
Henri Barthel, *GS1 Global Office,* Code, Bar
R. W. Bassemir, *Sun Chemical Corporation,* Inks
Allan M. Baylis, *Amber Associates,* Bags, Multiwall
A. J. Bean, *Sun Chemical Corporation,* Inks
Colin Benjamin, *The University of Missouri-Rolla,* Materials Handling
Laura Bix, *School of Packaging, Michigan State University,* Medical Device Packaging; Packaging Design and Development
Barbara Blakistone, *National Fisheries Institute,* Hazard Analysis and Critical Control Points
T. J. Boedekker, *IWKA,* Tube Filling
Terrie K. Boguski, *Franklin Associates, Ltd.,* Life-Cycle Assessment
John K. Borchardt, *Southhaven Communications,* Recycling
Raymond A. Bourque, *Ocean Spray Cranberries, Inc.,* Hot-Fill Technology
Craig D. Boyd, *Sun Chemical,* Anti-Fog Coating
Jeffrey Brandenburg, *The JSB Group,* Modified Atmosphere Packaging
Richard M. Brasington, *Buckhorn,* Boxes, Rigid, Plastic
D. Ryan Breese, *Eclipse Film Technologies,* Machine Direction Orientation
Thomas B. Brighton, *Tenneco Packaging,* Film, Stretch
Linda L. Butler, *National Business Forms Association,* Tags
Paul Butler, *Smart Packaging Consultant, Packaging Materials & Technologies Ltd,* Smart Packaging
Richard Cabori, *Angelus Sanitary Can Machine Company,* Can Seamers
Stephen J. Carter, *Solvay Polymers, Inc.,* Polyethylene, High-Density
Joe Cascio, *Ex-Chair, US Technical Advisory Group,* Environmental Management System
Dannette Fay Casper, *Ameripak, Inc.,* Specifications and Quality Assurance
Ramón Catalá, *IATA-CSIC, Packaging Laboratory,* Packaging of Food for High Pressure Treatments
J. R. Charters, *Paslode Corporation,* Staples
Yuhuan Chen, *National Fisheries Institute, McLean,* Hazard Analysis and Critical Control Points
S. Y. Cho, *Institute of Life Sciences and Biotechnology, Korea University,* Antimicrobial Packaging
Vivek Chougule, *Printpack, Inc.,* Thermoforming
Donghwa Chung, *Faculty of Marine Bioscience and Technology, Kangnung National University,* Permeation of Aromas and Solvents Through Polymeric Packaging Materials
Dennis A. Cocco, *PolyOne Corporation,* Poly(Vinyl Chloride)
John P. Colletti, *John P. Colletti and Associates,* Marine Environment and Export Packaging
Kay Cooksey, *Packaging Science, Clemson University,* Polymeric Oxygen Scavenging Systems
A. Corning, *A. Corning Consulting, Inc.,* Managing The Packaging Function
Bruce Cuthbertson, *Flexible Intermediate Bulk Container Association,* Flexible Intermediate Bulk Containers
Duncan O. Darby, *DuPont Packaging and Industrial Polymers, Clemson University,* Sealing, Heat; Testing, Packaging Materials
Michael W. Davis, *American Glass Research,* Glass Bottle Design and Performance
Frédéric Debeaufort, *IUT Génie Biologique, Université de Bourgogne,* Aroma Barrier Testing
Robert Demorest, *MOCON,* Testing, Permeation and Leakage
Phil Dodge, *Quantum Chemical Company,* Rotational Molding
Chris Dominic, *STFI-Packforsk AB, Lund University Packaging Logistics,* Supply/Demand Chain Management
Anil G. Doshi, *Bordon, Inc., Resinite Division,* Film, Flexible PVC
Gilles Doyon, *Scholle Corporation, Agriculture & Agri-Food Canada, Ministry,* Bag-In-Box, Dry Product; Product Quality and Information Traceability
Bob Drasner, *Michigan State University School of Packaging,* Bags, Bulk, Flexible Intermediate Bulk Containers
Thomas J. Dunn, *Printpak Inc.,* Multilayer Flexible Packaging
Joseph O. Eastlack, Jr., *Saint Joseph's University,* Consumer Research
Thomas Eie, *Research Scientist, Matforsk AS, Norwegian Food Research Institute,* Light Protection from Packaging
M. B. Eubanks, *MBE Associates,* Cans, Composite
F. B. Fairbanks, *Horix Manufacturing Company,* Filling Machinery, Liquid, Still
Stefano Farris, *Food Science and Microbiology, University of Milan,* Coating Equipment
Neal Ferguson, *I.C.C. Primex Plastics Corporation,* Corrugated Plastic
Robert M. Fiedler, *Adalis Corp.,* Shock
Bradley Finnigan, *Precision Fabrics Group,* Barrier Polymers
V. Firdaus, *Mobil Chemical Company,* Polyethylene, Linear and Very Low-Density
Ed Fisher, *CMS Gilbreth Packaging Systems,* Bands, Shrink
Gene A. Foster, *Middlesex Container Company, Inc.,* Boxes, Corrugated
Ronald H. Foster, *EVAL Americas,* Ethylene–Vinyl Alcohol Copolymers
Steve Fowler, *Fowler Associates Inc., Cryovac/Sealed Air Corporation,* Electrostatic Discharge Protective Packaging
William E. Franklin, *Franklin Associates, Ltd.,* Life-Cycle Assessment
H. Sean Fremon, *Cole Static Control, Inc.,* Static Control
S. J. French, *NASA,* Food Packaging for Space Missions
Paul Fry, *Franklin Associates, Ltd.,* Life-Cycle Assessment
Javier de la Fuente, *School of Packaging, Michigan State University,* Medical Device Packaging; Packaging Design and Development
Rafael Gavara, *IATA-CSIC, Packaging Laboratory,* Packaging of Food for High Pressure Treatments
J. A. Gibbons, *Egan Machinery Company,* Extrusion
G. E. Good, *Kwik Lok Corporation,* Closures, Bread Bag
Michael J. Greely, *Totani America, Inc.,* Standup Flexible pouches
Frank W. Green, *Point O'view,* Export Packaging
A. L. Griff, *Edison Technical Services,* Carbonated Beverage Packaging
Jennifer Griffin, *Polaroid Corp.,* Point of Purchase Packaging
Emma Hanby, *Campden and Chorleywood Food Research Association,* Modified Atmosphere Packaging Market, Europe
J. H. Han, *Frito-Lay Inc.,* Antimicrobial Packaging
Karen Hare, *Nutrition Services, Inc.,* Nutrition Labeling
Thomas J. Hartman, *Rutgers University,* Off-Odors Packaging
D. L. Hartsock, *Phillips 66 Company,* Styrene–Butadiene Copolymers

Eric Hatfield, *James River Corporation,* Coextrusions for Flexible Packaging; Machine Direction Orientation
Marvin Havens, *Fowler Associates Inc., Cryovac/Sealed Air Corporation,* Electrostatic Discharge Protective Packaging
Otto L. Heck, *Angelus Sanitary Can Machine Company,* Can Seamers
Peter Henningsen, *Minnetonka,* Bulk Packaging
John R. Henry, *Changeover.com.*, Changeover of Packaging Lines
Ruben J. Hernandez, *School of Packaging, Michigan State University,* Metrication In Packaging; Polymer Properties
Pilar Hernández-Muñoz, *IATA-CSIC, Packaging Laboratory,* Packaging of Food for High Pressure Treatments
Russell J. Hill, *BOC Coating Technology,* Film, Transparent Glass on Plastic Food-Packaging Materials
Edwin Ho, *OSI Industries,* Form/Fill/Seal, Vertical; Thermoform/Fill/Seal; Wrapping Machinery, Stretch-Film
Larry Horvath, *James River Corporation,* Coextrusions for Flexible Packaging
J. H. Hotchkiss, *Cornell University,* Canning, Food
George J. Huss, *Rubbright Brody, Inc.,* Microwavable Packaging and Dual-Ovenable Materials
Christopher Irwin, *Consultant, Brooklyn,* Blow Molding
Dae Hoon Jeon, *Department of Food Packaging, Korea Food and Drug Administration,* Radiation: Effect on Packaging Materials
Montfort A. Johnsen, *Montfort A. Johnsen & Associates, Ltd.,* Aerosol Containers; Pressure Containers; Propellants, Aerosol
Anne Johnson, *GreenBlue,* Sustainable Packaging
Bert Johnson, *MOCON,* Testing, Permeation and Leakage
Dee Lynn Johnson, *3M Company,* Indicating Devices
Harry Kannry, *Dussek-Campbell,* Waxes and Wax-Coated Folding Cartons
Raivo A. Karmas, *Sandoz Inc.,* Patent Law Primer for the Packaging Industry
Irving Kaye, *National Starch and Chemical Company,* Adhesives
Huston Keith, *Keymark Associates,* Trays, Foam
Joseph P. Kerry, *Department of Food and Nutritional Sciences, University College Cork,* Smart Packaging Technologies for Beverage Products
Allen G. Kirk, *E. I. Du Pont de Nemours, Inc.,* Film, Plastic
David R. Kopsilk, *CMS Gilbreth Packaging Systems,* Bands, Shrink
Joseph Kost, *Eastern Regional Research Center, Agricultural Research Service,* Biobased Materials
Fred J. Kraus, *Crown Cork & Seal Company, Inc.,* Cans, Steel
John M. Krochta, *Food Science and Technology, UC Davis,* Film, Edible
C. R. Kuhr, *Kliklok Corporation,* Cartoning Machinery, Top-Load
J. M. Lagaron, *Novel Materials and Nanotechnology Lab., IATA,* Nanocomposite Packaging Materials
Marco Lagimonière, *Scholle Corporation, Agriculture & Agri-Food Canada, Ministry,* Bag-In-Box, Liquid Product; Product Quality and Information Traceability
Rauno Lampi, *Consultant,* Military Food Packaging
Gary Latto, *Dussek-Campbell,* Waxes and Wax-Coated Folding Cartons
Howard R. Leary, *Howard R. Leary Associates,* Consulting
Dong Sun Lee, *Kyungnam University,* Antimicrobial Packaging; Polyvinylidene Chloride (PVDC); Sous Vide or Cook/Chill Food Products
Brad Leonard, *Cape Systems, Inc.,* Computer Applications: Pallet Patterns
Michael W. Leonard, *Sun Chemical—Functional Coating Research,* Barrier and Overprint Coatings
R. E. Lisiecki, *Ex-Cell-O Corporation,* Cartons, Gabletop
LinShu Liu, *Eastern Regional Research Center, Agricultural Research Service,* Biobased Materials
Hugh Lockhart, *School of Packaging, Michigan State University,* Packaging Design and Development
Jeanne M. Lucciarini, *US Army Natick Soldier Center,* Military Packaging
L. T. Luft, *Menasha Corporation,* Pallets, Plastic
Robert R. Luise, *Hytem Consultants, Inc.,* Liquid-Crystalline Polymers, Thermotropic
Paul R. Lund, *The BP Chemical Company,* Nitrile Polymers
Burton R. Lundquist, *Armour Food Company, Conagra (retired),* Career Development, Packaging
Larry Lynch, *National Paperbox and Packaging Association,* Boxes, Rigid, Paperboard
P. V. Mahajan, *Department of Process and Chemical Engineering, University College Cork,* Packaging Design System for Fresh Produce
Andrea S. Mandel, *Andrea S. Mandel Associates, Packaging Consulting Services,* Bottle Design, Plastic
Norma J. Marashin, *Union Carbide Corporation, Bound Brook,* Polyethylene, Low-Density
Jorge Marcondes, *San Jose State University,* Vibration
Patricia D. Guerra Marcondes, *Clemson University,* Testing, Packaging Materials
Kenneth S. Marsh, *Kenneth S. Marsh and Associates, Ltd.,* Shelf Life
R. W. McKellar, *The Gummed Industries Association,* Tape, Gummed
Joseph P. McCaul, *The BP Chemical Company,* Nitrile Polymers
William McCombie, *Packaging Science Program, Agricultural & Biological Engineering Department,* Radio Frequency Identification (RFID)
Alfred H. McKinlay, *Consultant,* Testing, Shipping Containers; Transport Packaging
R. C. Miller, *Montell USA, Inc.,* Polypropylene
Thomas Miller, *IWKA,* Tube Filling
Andrew Mills, *Department of Pure and Applied Chemistry, University of Strathclyde,* Intelligent Inks in Packaging
Joseph W. Miltz, *Department of Biotechnology & Food Engineering, Technion-Israel Institute of Technology,* Intelligent Packaging: Concepts and Applications
Nazir Mir, *Perftech, Inc.,* Film, Perforated
Barry A. Morris, *DuPont Packaging and Industrial Polymers,* Ionomers; Sealing, Heat
Eldridge M. Mount, *EMMOUNT Technologies,* Cast, Polypropylene; Film, Oriented Polypropylene
J. F. Nairn, *Phoenix Closures, Inc.,* Closures, Bottle and Jar
P. V. Narayanan, *SIES School of Packaging, Packaging Technology Centre,* Packaging in India
Cristina Nerin, *Aragon Institute of Engineering Research (I3A), CPS,* Analytical Methods for Food Packaging and Shelf Life Studies
John Newton, *ICI, Wilmington,* Film, Oriented Polyester
N. F. Nieder, *Ball Corporation, Westminster,* Cans, Aluminum
Micha Noah, Labels and Labeling Machinery
Richard B. Norment, *Steel Shipping Container Institute,* Drums/Pails, Steel
T. M. Norpell, *Phoenix Closures, Inc.,* Closures, Bottle and Jar
R. H. Nurse, *American Hoechst Corporation,* Film, High-Density Polyethylene
Noe Obinata, *Toppan Printing Company,* Film, Ceramic Coated
Paul Obolewicz, *Rand Whitney Packaging,* Cartons, Folding
Jim Ohlinger, *Tipper Tie-Net,* Netting, Plastic
Lorna Opatow, *Opatow Associates,* Testing Consumer Packages for Marketing Effectiveness
Mary Alice Opfer, *Fibre Box Association,* Transportation Codes
Octavio Orta, *Coated Board Systems Group, Riverwood International Corporation,* Carriers, Beverage
Manfred Ossberger, *FABES Forschungs-GmbH,* Migration from Food Contact Materials
T. Oziomek, *NASA,* Food Packaging for Space Missions
Gregory V. Pace, *Sun Chemical Corporation,* Off-Odors Packaging
Hyun Jin Park, *Graduate School of Biotechnology, Korea University,* Radiation: Effect on Packaging Materials
Larry Pascucci, *Negri Bossi Inc.,* Injection Molding for Packaging Applications
M. H. Perchonok, NASA, Food Packaging for Space Missions
Richard Perdue, *Taylor,* Vacuum Packaging
Matt Piercy, *Printpack, Inc.,* Thermoforming

Luciano Piergiovanni, *Department of Food Science & Microbiology, Milan University,* Packaging in the European Union

Bruno Poetz, *Mauser Werke GmBH,* Drums, Plastic

Lynneric Potter, *Campden and Chorleywood Food Research Association,* Modified Atmosphere Packaging Market, Europe

Robert Quinn, *Union Camp Corporation,* Boxes, Solid-Fiber

Richard C. Randall, *International Business Standards Association,* International Standards

Stephen A. Raper, *The University of Missouri-Rolla,* Materials Handling

Michele Raymond, *Raymond Communications, Inc.,* Environmental Regulations, International; Environmental Regulations, North America

Terre Reingardt, *Ball Corporation,* Cans, Aluminum

David Reznik, *Raztek Corporation,* Cans, Corrosion

A. B. Robertson, *Allied Fibers and Plastics,* Film, Fluoropolymer

Gordon L. Robertson, *Food• Packaging• Environment,* Packaging of Food

F. A. Rodrigues, *Department of Process and Chemical Engineering, University College Cork,* Packaging Design System for Fresh Produce

Jack L. Rosette, *Forensic Packaging Concepts, Inc.,* Forensic Packaging; Tamper Evident Packaging

Luigi Rossi, *European Commission; and Strategic Advisor for Keller and Heckman LLP,* European Packaging Legislation

R. G. Ryder, *Klöckner-Pentaplast of America, Inc.,* Film, Rigid PVC

M. D. Sanchez-Garcia, *Novel Materials and Nanotechnology Lab.,* Nanocomposite Packaging Materials

Claire Koelsch Sand, *Ameripak, Inc.,* Specifications and Quality Assurance

M. I. R. M. Santoro, *Department of Pharmacy, Faculty of Pharmaceutical Sciences, University of São Paulo,* Pharmaceutical Packaging

K. M. Schaich, *Department of Food Science, Rutgers University,* Lipid Oxidation: Chemical Stabilization

H. H. Schueneman, *San Jose State University,* Supply Chain Engineering; Testing, Product Fragility

Ronald Schultz, *RBS Technologies, Inc.,* Decorating: In-Mold Labeling

Andrew Scully, *CSIRO Materials Science and Engineering,* Active Packaging

Susan Selke, *School of Packaging, Michigan State University,* Environmental Impact of Packaging; Nanotechnology and Packaging

Anne-Marie Seuvre, *IUT Génie Biologique, Université de Bourgogne,* Aroma Barrier Testing

R. L. Sheehan, *3M Corporation,* Tape, Pressure Sensitive

Shiowshuh Sheen, *Eastern Regional Research Center, Microbial Food Safety Research Unit, USDA,* Applications of Predictive Microbiology to Food Packaging

J. S. Siebenaller, *American Hoechst Corporation,* Film, High-Density Polyethylene

Jean Silbereis, *SLCC Can Consultants La Tour de Peilz,* Metal Cans, Fabrication

Ralph A. Simmons, *Keller and Heckman,* Laws and Regulations, United States

A. K. Singh, *Department of Pharmacy, Faculty of Pharmaceutical Sciences, University of São Paulo,* Pharmaceutical Packaging

R. Paul Singh, *Department of Biological and Agricultural Engineering, University of California,* Time Temperature Indicators

Stanislav E. Solovyov, *Multisorb Technologies, Inc.,* Oxygen Scavengers

Yoon S. Song, *Process Engineering Branch, Office of Food Safety (OFS), United States Food and Drug Administration,* Container Integrity Regulation, USA; High-Voltage Leak Detection (HVLD) Technique for Hermetically Sealed Packages

M. J. Sousa-Gallagher, *Department of Process and Chemical Engineering, University College Cork,* Packaging Design System for Fresh Produce

Burt Spottiswode, *DuPont P&IP,* Skin Packaging

Jean Storlie, *Nutrition Labeling Solutions,* Nutrition Labeling

Andrew W. Streeter, *CPS International Pack-Track,* Japanese Packaging

John Sugden, *The Dow Chemical Company,* Polystyrene

K. W. Suh, *The Dow Chemical Company,* Foam Plastics

J. T. Sullivan, *Rohm and Haas Company,* Acrylic Plastics

Raghav Prashant Sundar, *School of Packaging, Michigan State University,* Packaging Design and Development

Frank J. Sweeney, *Sweeney Cooperage Ltd.,* Barrels

Arthur J. Taggi, *Consultant DuPont Printing and Publishing,* Printing: Gravure and Flexographic

Paul T. W. Takhistov, *Department of Food Science, Rutgers University,* Biofilm Development on Packaging Materials; Biosensor Technology for Food Packaging Applications; Intelligent Packaging: Concepts and Applications

Stephen R. Tanny, *DuPont Polymers,* Adhesives, Extrudable

George J. Tarulis, *Crown Cork & Seal Company, Inc.,* Cans, Steel

P. P. Tong, *Mobil Chemical Company,* Polyethylene, Linear and Very Low-Density

Robert L. Trottier, *U.S. Army Natick Soldier RD&E Center,* Military Packaging

Diana Twede, *School of Packaging, Michigan State University,* Bags, Bulk, Flexible Intermediate Bulk Containers; Economics of Packaging; Logistical/Distribution Packaging

M.H. Tusim, *The Dow Chemical Company,* Foam Plastics

H. J. G. Van Beek, *Klöckner-Pentaplast of America, Inc.,* Film, Rigid PVC

W. D. van Dongen, *TNO Quality of Life, Advanced Food Analysis Group,* Diagnostic Sensors in Packaging and in Shelf-Life Studies

J. J. F. vanVeen, *TNO Quality of Life, Advanced Food Analysis Group,* Diagnostic Sensors in Packaging and in Shelf-Life Studies

Pierre Veilleux, *Research Branch Agriculture and Agri-Food Canada, Ministry,* Product Quality and Information Traceability

Andrée Voilley, *IUT Génie Biologique, Université de Bourgogne,* Aroma Barrier Testing

Dale Voney, *Markem-Imaje Kennesaw,* Date Coding and Marking

J. Robert Wagner, *Philadelphia College of Textiles and Science, Philadelphia,* Nonwovens

Phillip A. Wagner, *The Dow Chemical Company,* Foam, Extruded Polystyrene; Polystyrene

Edwin H. Waldman, *Keyes Fibre Company,* Pulp, Molded

Peter A. Walker, *Consultant, DuPont Printing and Publishing,* Printing: Gravure and Flexographic

Zhi-Wei Wang, *Packaging Engineering Institute, Jinan University,* Packaging in China

Richard Ward, *Perritt Laboratories, Inc.,* Child-Resistant Packaging

Walter Warren, *Salwasser Manufacturing Company, Inc.,* Case Loading

Bruce A. Welt, *Packaging Science Program, University of Florida,* Radio Frequency Identification (RFID)

Steve Werblow, *Logotech, Inc.,* Anti-Counterfeiting Packaging

Christopher White, *The Tube Council of North America,* Tubes, Collapsible

John Wininger, *Eastman Chemical Co.,* Sheet, PETG

George D. Wofford, *Cryovac Division, W. R. Grace & Co.-Conn.,* Film, Shrink

Ernest Wurzer, *Mauser Werke GmBH,* Drums, Plastic

Fritz Yambrach, *Rochester Institute of Technology,* Package-Integrity in Sterile Disposable Healthcare Products

Kit L. Yam, *Department of Food Science, Rutgers University,* Controlled Release Packaging; Estimation of Shelf Lives of Oxygen Sensitive Packaged Products; Food Package Development; Gas Barrier Properties: Effects of Small Leaks; Gas Permeation of Packaging Materials; Intelligent Packaging: Concepts and Applications; Microwaveable Foods Packaging; Molecular Weight of Packaging Polymers; Packaging Functions and Environments; Polyvinylidene Chloride (PVDC); Socioeconomic Driving Forces of Food Packaging; Structure/Property Relationships of Packaging Materials; Sustainable Packaging: Conceptual Framework

Dennis E. Young, *School of Packaging, Michigan State University,* Distribution Hazard Measurement

Gerald A. Young, *Sonoco Products Company, Industrial Container Division,* Drums, Fiber

R. W. Young, *John Dusenberry Co.,* Slitting And Rewinding Machine

Paul J. Zepf, *Zarpac, Inc.—Engineering,* Conveying; Packaging Line Performance

Keith A. Zullow, *Goodwin Procter LLP,* Patent Law Primer for the Packaging Industry

David A. Zumbrunnen, *Laboratory for Advanced Plastic Materials and Technology, Clemson University,* Smart Blending Technology

PREFACE

Welcome to the third edition of the *Wiley Encyclopedia of Packaging Technology*. For over two decades, this has been the most authoritative packaging encyclopedia around the world, providing useful and comprehensive information to serve the packaging community. In this new edition, we have done our best to continue the tradition.

Since the last edition of this encyclopedia published 12 years ago, what have been the major changes in packaging technologies? To answer this question, it is useful to understand that the packaging industry is largely driven by the needs of the consumers, the society, and the manufacturers. The consumers need higher quality products that are more convenient to meet their ever-changing lifestyle. The society needs products that are safer to respond to events such as September 11 and outbreaks of food pathogens, as well as products that are more environmentally friendly to meet the demands of the public and the activists. The manufacturers need better and more cost-effective packaging technologies to satisfy the market and make profits.

During the past decade, several new or improved packaging technologies have emerged to satisfy the needs of the market, specifically those relating to active packaging, sustainable packaging, and intelligent packaging. Active packaging involves advanced technologies that actively change the internal conditions of the package to extend product shelf life; for example, oxygen-scavenging films are an active packaging technology that is used to absorb oxygen inside the package and extend the shelf life of the product. Sustainable packaging involves technologies that are environmentally friendly, socially acceptable, and economically viable; for example, a sustainable package may be made of biobased materials that are biodegradable and inexpensive but yet possessing properties required for the application. Intelligent packaging involves the use of smart package devices (such as RFID tags, time-temperature indicators, and biosensors) to track product, sense the environment inside or outside the package, monitor product quality, and improve efficiency.

In this third edition, new articles are added to provide the reader with a basic understanding of active packaging, sustainable packaging, and intelligent packaging. Other new articles include important packaging topics such as nanotechnology, smart blending technology, packaging for space missions, military packaging, biobased materials, high-voltage leak detection technique, analytical methods for food packaging, application of predictive microbiology, and patent law primer for the packaging industry.

Although the packaging industry will adopt new technologies slowly, its operations continue to rely heavily on traditional technologies. In this edition, a balance is struck to allocate spaces for new and traditional technologies.

The scope of packaging is broad. It encompasses technical activities such as machinery design, graphic design, package development, package manufacture, shelf-life testing, distribution, and marketing. It deals with various types of packages, including metal cans, glass containers, paper cartons, plastic containers, and pouches. It involves the participation of packaging scientists and engineers, packaging material suppliers, packaging converters, manufacturers, retailers, and regulatory agencies. This encyclopedia endeavors to cover all relevant and contemporary aspects of packaging, although inevitably some aspects may be omitted or deemphasized. The A to Z format and the cross-index permit the readers to find everything in the encyclopedia easily.

This third edition is blessed by the dedication and contributions of the authors, the editorial advisory board, and the experts from the packaging industry. The editors of previous editions deserve credit for building a strong foundation for the encyclopedia. As the editor of this new edition, I am grateful to the assistance and hard work of the editorial staff from Wiley, particularly Arza Seidel, Mary Mann, Mickey Bickford, and Kris Parrish, along with the staff at MPS. The encyclopedia is also blessed by the support of the readers who make it the most recognized packaging encyclopedia ever published.

Finally, acknowledgments would not be complete without thanking my wife, Aileen, who as a research enthusiast, has acted as sounding board and support during countless hours of working.

It is my fervent hope that this new edition will continue to serve as a useful reference for the seasoned professionals, novices, students, and casual readers.

Kit L. Yam
New Brunswick, New Jersey

A

ACRYLIC PLASTICS

J. T. Sullivan
Rohm and Haas Company
Updated by Staff

Acrylic plastics is defined as a family of synthetic or man-made plastic materials containing one or more derivatives of acrylic acid. The most commonly used derivative is poly(methyl methacrylate). Polymers based on acrylic monomers are useful in packaging as a basis for printing inks and adhesives and as modifiers for rigid PVC products.

ACRYLIC-BASED INKS

Paste Inks

Acrylic solution resins are used in lithographic inks as dispersing or modifying letdown vehicles (see Inks; Printing). A typical resin (60% in oil) offers excellent dot formation, high color fidelity, exceptional print definition, nonskinning, and good press-open time. Set times are fast (~60–90 s), and a minimal level of starch spray (75% of normal) is effective. Coatings on cartons, fabrication stocks, and paper are glossy and exhibit good dry resistance.

Solvent Inks

Because of their resistance to heat and discoloration, good adhesion, toughness, and rub resistance, acrylics are widely used in flexographic inks on paper, paperboard, metals, and a variety of plastics (1). These inks also give block resistance, resistance to grease, alcohol, and water, and good heat-sealing performance (see Sealing, heat). With some grades, adding nitrocellulose improves heat sealability, heat resistance, and compatibility with laminating adhesives. This family of methacrylate polymers (methyl to isobutyl) has broad latitude in formulating and performance. Solid grades afford low odor, resist sintering, and dissolve rapidly in alcohol–ester mixtures or in esters alone (gravure inks). Solution grades (40–50% solids) are available, as well as nonaqueous dispersions (40% solids) in solvents such as VMP naphtha, which exhibit fast solvent release and promote superior leveling and hiding. They are excellent vehicles for fluorescent inks.

Water-Based Inks

The development of waterborne resins has been a major achievement. Their outstanding performance allows them to replace solvent systems in flexographic and gravure inks and overprint varnishes on corrugated and kraft stocks, cartons, and labels. Approximately 50% of all the flexographic inks used are based on water as their primary solvent. Typical inks are water-based with acrylic emulsion resins as the main binder (1). Press inks are very fluid and of low viscosity. Inks contain a variety of additives for the elimination of foaming dipersion of pigments, rheological modifiers, slip agents, and so on. The paramount advantage of aqueous systems is a substantial decrease in environmental pollution by volatile organics. Aqueous acrylic colloidal dispersions (30% solids) and a series of analogous ammonium salts (46–49% solids) are effective dispersants for carbon blacks, titanium dioxide, and organic pigments. Derived inks give crisp, glossy impressions at high pigment loading, good coverage and hiding, and water resistance. The relatively flat pH–viscosity relationship assures formulation stability on presses despite minor loss of volatiles. Adjusting the alcohol–water ratio controls drying rate, and quick-drying inks can be made for high-speed printing. The resins are compatible with styrene–acrylic or maleic dispersants and acrylic or styrene–acrylic letdown vehicles. Blends of self-curing polymer emulsions are excellent overprint varnishes for labels and exhibit a good balance of gloss, holdout, slip, and wet-rub resistance.

Some aqueous acrylic solutions (37% solids) combine the functions of pigment dispersant and letdown resin and serve as ready-to-use vehicles for inks on porous substrates like kraft and corrugated stocks and cartons. They afford excellent color development, excellent heat-aging resistance in formulations, and fast drying. The flat pH–viscosity relationship gives the same benefit as the dispersants.

ACRYLIC ADHESIVES

Pressure-Sensitive Adhesives

Solution copolymers of alkyl acrylates and minor amounts of acrylic acid, acrylonitrile, or acrylamide adhere well to paper, plastics, metals, and glass and have gained wide use in pressure-sensitive tapes (2). Environmental regulations, however, have raised objections to pollution by solvent vapors and are requiring costly recovery systems. This opportunity has encouraged the development of waterborne substitutes, such as emulsion polymers, which eliminate these difficulties, offer excellent adhesion, show resistance to wet delamination, aging, and yellowing, and, like the solvent inks, need no tackifier. In packaging applications, the emulsion polymers provide high tack, a good balance of peel adhesion and shear resistance, excellent cling to hard-to-bond substrates, and clearance for food packaging applications under FDA Regulations 21 CFR 175.105, 21 CFR 176.170, and 21 CFR 176.180. Their low viscosity makes formulation easy, and the properties of the adhesives can be adjusted by adding surfactants, acrylic thickeners, and defoamers. The main advantages of pressure-sensitive adhesives compared to other tapes is convenience of use. There are no storage problems, and mixing or activation is not necessary. No waiting is involved. Often the bond is reversible. Disadvantages are that the adhesive strengths are low, they are unsuitable for rough surfaces, and they are expensive in terms of cost per bond area (3).

Resins are available that are designed specifically for use on polypropylene carton tapes (4). They are ready-to-use noncorrosive liquids applicable to the corona-treated side of oriented polypropylene film using knife-to-roll, Mayer rod, or reverse-roll coaters (see Coating equipment; Film, oriented polypropylene; Surface modification). A release coating is unnecessary because the adhesive does not stick to the untreated side and parts cleanly from the roll. The tapes are used to seal paperboard cartons with high-speed taping machines or handheld dispensers. Adhesion to the cartons is instantaneous and enduring. The colorless tape is well-suited for label protection. The material adheres well to other plastics and metals.

An acrylate–vinyl acetate copolymer-based tape is generally used in high-quality tapes for their better technical properties. They are paler in color, exhibit much better aging, and, if crosslinked after coating, can give a very good shear strength (3).

Hot-Melt Adhesives

The most recent development in pressure-sensitive tape manufacture is the the hot-melt coating process. These adhesives offer obvious advantages over solvent or water-borne materials if equivalent performance is obtainable. Acrylic prototypes gave better color and oxidative stability than rubber-based products, but exhibit poor adhesion quality. New improved grades are providing an impressive array of adhesive properties and superior cohesive strength at elevated temperatures in addition to stability and low color. The action of the adhesives involves a thermally reversible crosslinking mechanism that gives ready flow at 350°F (177°C), rapid increase in viscosity on cooling, and a stiff crosslinked rubber at ambient temperature. The resins give durable peel adhesion, good shear resistance, resistance to cold flow, and excellent photostability in accelerated weathering. On commercial machinery these resins have displayed excellent coatability on polyester film at high line speeds (see Film, oriented polyester). These adhesives form bonds without supplementary processing and are considered environmentally friendly. A drawback is the possibility of damage to a substrate that cannot withstand application temperatures (3). There is a wide variety of possible applications for these materials, including packaging tapes.

PVC MODIFIERS

Acrylics have played a major role in the emergence of clear rigid PVC films and bottles (5, 6). Acrylic processing aids provide smooth processing behavior in vinyl compounds when passed through calenders, extruders, blow-molding machinery, and thermoforming equipment (see Additives, plastics). One member of this group is a lubricant-processing aid that prevents sticking to hot metal surfaces and permits reduction in the level of other lubricants, thereby improving clarity. Other benefits of acrylics are low tendency to plateout and a homogenizing effect on melts to give sparkling clarity and improved mechanical properties. The usual level in vinyl compounds for packaging is about 1.5–2.5 phr.

In a second group are the impact modifiers, which are graft polymers of methyl methacrylate–styrene–butadiene used in the production of clear films and bottles. The principal function of impact modifiers is to increase toughness at ambient and low temperature. Levels of 10–15 phr, depending on modifier efficiency, are normal.

Many acrylics are cleared for use in food-contact products under FDA Regulations 21 CFR 178.3790 and 21 CFR 175.210 (7). These regulations stipulate limits in the permissible level of modifiers relative to their composition. Processors should seek advice from suppliers on the makeup of formulations. Many modifiers are fine powders that may produce airborne dust if handled carelessly. Above 0.03 oz/ft^3 (0.03 mg/cm^3), dust is a potential explosion hazard and its accumulation on hot surfaces is a fire hazard. The recommended exposure limit to dust over an 8-h period is 2 mg/m^3. Eliminate ignition sources, ground equipment electrically, and provide local exhaust ventilation where dusting may occur (8). Workers may wear suitable MSHA-NIOSH respiratory devices as protection against dust.

BIBLIOGRAPHY

1. R. W. Bassemeir and A. Bean, *Kirk–Othmer Encyclopedia of Chemical Technology*, Vol. 14, John Wiley & Sons, Hoboken, NJ, 2005, pp. 320, 326.
2. D. Satas, ed., *Handbook of Pressure-Sensitive Adhesives*, Satas & Associates, 1999.
3. D. W. Aubrey, in D. E. Packham, ed., *Handbook of Adhesives,* John Wiley & Sons, Chichester, UK, 2005.
4. W. J. Sparks, *Adhes. Age* **26**(2), 38 (1982).
5. *Bulletin MR-112b*, Rohm and Haas Company, Philadelphia, 1983.
6. J. T. Lutz, Jr., in D. L. Dunkelberger, ed., *Impact Modifiers: History and Practice for PVC*, John Wiley & Sons, New York, 1991, p. 34.
7. "Acrylate Ester Copolymer Coating," *21CFR175.210*, U.S. Food and Drug Administration, revised April 2003, accessed January 2008.
8. American Conference of Governmental Hygienists, Cincinnati, *A Manual of Recommended Practice*, 1982; American National Standards Institute, New York, *Fundamentals Governing the Design and Operation of Local Exhaust Systems*, ANSI Z-9.2, 1979.

ACTIVE PACKAGING

ANDREW SCULLY
CSIRO Materials Science and
Engineering, Melbourne,
Victoria 3169, Australia

This is a revised and updated version of the article written by Michael Rooney

Packaging is described as active when it performs some desired role other than to provide an inert barrier between the product and the outside environment, although numerous other definitions also exist (1). Therefore, active packaging differs from conventional passive packaging in that one or more forms of interaction are planned, usually to offset a deficiency in an otherwise suitable package. The active component may be part of the packaging material or may be an insert or attachment to the inside of the pack. Active packaging is largely an innovation dating from the 1980s, although there are examples that have been in use for over a century. The tinplate can, for instance, provides a sacrificial layer of tin that protects the food from accumulation of catalytically active iron salts. Antioxidant release from waxed-paper packs for breakfast cereals has been used, as has been the impregnation of cheese wraps with sorbic acid.

It was in 1987 that the term "active packaging" was introduced by Labuza (2). Prior to that time, terms such as "smart," "freshness preservative," and "functional" were used to describe active-packaging materials. Sachets of iron powder have been described as "deoxidizers," "free oxygen absorbers," and "oxygen scavengers" (see Oxygen scavengers). Active packaging can enable the properties of the package to more adequately meet the requirements of the product. Therefore, the forms and applications of active packaging are diverse, addressing specific situations in the protection and presentation of foods and other products.

PROBLEMS ADDRESSED BY ACTIVE PACKAGING

Active packaging can be used to minimize the deterioration of the packaged product, which can occur through biological or physicochemical reaction mechanisms.

Biological deterioration may result from insect attack as occurs, for instance, in foods, furs, fabrics, and museum specimens. Elevated temperatures and humidities enhance the rate of activity at various stages in the life cycles of insects. Chemical fumigation is possible in some cases but is becoming more tightly controlled with foods such as grains and dried fruits. Accordingly, modified-atmosphere packaging (MAP) is now commonly used in many markets, including Europe and North America. Since low levels of oxygen and/or high carbon dioxide levels are required to suppress growth, packaging systems or adjuncts that assist in achieving such atmospheres can contribute to quality maintenance. Such adjuncts are oxygen scavengers, desiccants, and carbon dioxide emitters.

The other generically common cause of biological deterioration is microbial growth. This is usually enhanced by the same variables, but there is also danger from anaerobic pathogenic bacteria, such as clostridia, that grow at very low oxygen levels or in the absence of oxygen. Hence, the removal of oxygen is not necessarily a solution to all microbial growth problems. Antimicrobial treatments such as the release of carbon dioxide, ethanol, other preservatives, or fungicides can play a role in reducing microbial growth. Similarly, desiccants can assist in providing the "hurdle" of reduced water activity, especially in foods. Where liquid water is formed by condensation on the packages of fresh produce, the use of humidity buffers or condensation control films can be useful. Where tissue fluids from fish or white and red meats is unsightly, the use of drip absorbent pads is commonplace.

Biological deterioration of fresh produce also occurs naturally as part of the process of senescence. Reduction in the rate of senescence can be achieved in many cases by reduction of the respiration rate by reducing equilibrium oxygen concentrations to $\sim 2\%$. Ethylene synthesis that accelerates ripening and senescence can be suppressed by elevated carbon dioxide concentrations. Existing plastic packaging films seldom allow beneficial equilibrium-modified atmospheres to be developed, so some form of active packaging is needed. Transpiration of water by produce leads to condensation when temperatures fluctuate slightly. Furthermore, ethylene release by one or more damaged or ripe fruit can cause rapid ripening of others. This is akin to the "one rotten apple in the barrel" situation. Ethylene removal is therefore a highly desirable property of produce packaging.

Chemical deterioration vectors act on the widest range of packaged products. These include especially foods and beverages (lipid and nutrient loss, off-flavor generation), but also pharmaceuticals. The protection offered by active packaging is, in many cases, essential to achieving a satisfactory shelf life for pharmacologically active compounds, many of which can lose potency through hydrolysis and, therefore, require the use of a desiccant. With the intense search for new drug candidates, attention is now being directed to compounds that are subject to oxidation, in which case protection from oxygen becomes essential to maintaining efficacy. Similarly, active packaging can be useful for optimizing the shelf life of *in vitro* diagnostic preparations, which often include chemically and biochemically active compounds that may be subject to hydrolytic or oxidative degradation. The active protection in this case can either be incorporated within the package or be designed into the device itself. Some diagnostic formulas are enzyme-based, with the enzymes in the dry form or a fully hydrated form. The moisture content of dry enzyme preparations must be controlled at an appropriate low level, with sufficient residual moisture to ensure that the protein does not become denatured, thereby inhibiting its activity. Conversely, the moisture content of hydrated enzyme preparations must be maintained at a level that prevents the localized dilution or leaching of formula components caused by moisture evaporation and recondensation as a result of temperature fluctuations during storage and distribution. In this case, active moisture regulation within the package can be useful for maintaining functionality over the required shelf life.

Industrial chemicals such as amines, and particularly some printing inks, are oxidized on storage. Microelectronic components, some metals, and a variety of unrelated items can be subject to attack by oxygen. Often the rate of loss can be reduced adequately by inert-gas flushing and barrier packaging. However, these treatments are not always effective, convenient, or economical, particularly when oxygen levels below 0.5% are desired (3). Nitrogen flushed packs of dry foods often have residual oxygen levels of 0.5–2%. Chemical forms of in-pack oxygen scavenging have been introduced both to reduce these residual levels further and to deoxygenate air headspaces without the use of inert-gas flushing or evacuation.

Fried snacks are particularly susceptible to oxidation, depending on their moisture content. Although sliced, processed meats are packaged commercially under vacuum, improved presentation using MAP can be achieved when an oxygen scavenger is present. The pink nitrosomyoglobin is damaged by even low quantities of oxygen in the package. The flavor of alcoholic beverages such as beer and white wines is particularly sensitive to oxygen, so the relatively high oxygen permeability of poly(ethylene terephthalate) (PET) bottles makes them unsuitable for packaging most wines and beers. The presence of oxygen in glass bottles is usually offset by addition of sulfur dioxide to the beverage. However, oxidative loss of this antioxidant still limits the shelf life of beer and white wines and limits their packaging options. A similar sulfur dioxide loss occurs in dried apricots. In these cases the presence of an oxygen scavenger that does not react with this acidic gas is required. Porous adsorbents in current oxygen scavengers may also remove some of the sulfur dioxide.

The flavor of some foods changes on storage because of effects other than oxidation. Tainting is a recurrent problem. Moldy taints can result from long voyages in shipping containers. Methods of odor interception without the use of expensive barrier packaging are needed for the transportation of low-valued primary products. Besides interception of external taints, there is also a need for removal of food breakdown products that can be formed during storage. These include amines or thiols formed rapidly in fish or rancid odors in oil-containing foods. Such compounds can be present in trace amounts that are significant organoleptically but may not constitute a health hazard. The bitter principle in some orange juices, limonin, is formed on standing, and a method for its removal from juice has been reported (4).

Two physical properties of a product that can potentially be affected by active packaging are heating and cooling. Thus the microwave heating of packaged multicomponent entrees offers a challenge for uniform heating in spite of varying layer thicknesses and water contents (see Microwave pasteurization and sterilization). Canned drinks, such as sake and coffee, supplied via vending machines in Japan are frequently consumed warm. Other drinks may need to be cooled, and so dispensing from the one machine may necessitate building the temperature-changing capacity into the can itself.

GOALS OF ACTIVE PACKAGING

Active packaging is chosen to enhance the ability of conventional packaging to help deliver the product to the user in a desired state. The decision to use some form of active packaging will often be based on one or more of the following considerations (see also Shelf life).

1. *Extension of Shelf Life*. This extension may exceed the presently accepted limits as with sea shipment of some fresh produce.
2. *Less Expensive Packaging Materials*. Packaging of limited-shelf-life products may require enhancement of only one property for a fixed period. This can include bakery products, metal components shipped by sea, or chilled meats.
3. *Simpler Processing*. Introduction of additional microbiological “hurdles” can allow MAP to be achieved without use of expensive equipment.
4. *Reduction or Removal of Preservatives from Food Formulations*. This is done to meet consumer demands for “fresher” foods containing fewer additives by transferring preservatives from the food to the packaging.
5. *Difficult-to-Handle Products*. Oxygen can be removed from tightly packaged products such as cheeses that are subject to mold growth.
6. *Allowing Particular Types of Packages to be Used*. This could include (a) retortable plastic packages for products with multiyear shelf lives or (b) PET wine bottles.
7. *Presentation*. Heating by microwave susceptors and other adjuncts has allowed packaging innovation for convenience foods.

Other goals are developing as the potential is being realized. Indicators of time–temperature and temperature abuse are presently available. The composition of the package headspace can potentially indicate chemical, physiological, or microbiological state or the potency of the packaged product.

FORMS OF ACTIVE PACKAGING

The active components in packaging can exist either as part of an otherwise unmodified package or as an elaborate adjunct or design modification. The major form in use at present is the insertion of sachets of various scavengers or emitters. These have been followed more recently by plastics blends or compounds and, to a lesser extent, by composite packages of various forms.

Sachets and Other Inserts

Desiccants. Silica gel has been supplied for protection of packaged goods from water for many years. A range of sachets and porous canisters as well as saddles are manufactured in sizes from grams to kilograms by companies such as Multisorb Technologies, Inc. (Buffalo, NY) and Süd-Chemie. Silica gel has a capacity when dried for taking up 40% of its own weight of water vapor. An alternative is lime (calcium oxide), which takes up 28%. Both are used largely in the shipment of goods through humid atmospheres to protect against corrosion (steel, aluminum computers), caking (pharmaceuticals), or mold growth (foods). In Japan these are used with some snacks such as rice crackers to give a high level of crunchiness, as well as a sticky, dehydrating sensation on the tongue. Many variants in form have facilitated new uses for these well-known materials. Sachets are marked

"Do not eat" and are often between the primary and secondary package. Less severe desiccants can be also used for condensation control in the wholesale distribution of produce, particularly where the carton liner bag is heat-sealed to generate a modified atmosphere. A few products such as tomatoes are packed with large microporous sachets of salts, like sodium chloride, which absorb excess water at the high relative humidities experienced in such closed packages. The relative humidity can be lowered from ~95% to 80%. This was a first-generation approach to humidity buffering.

Oxygen Scavengers. Oxygen scavenging sachets were introduced in Japan in 1969 initially containing sodium dithionite and lime. This followed early work by Tallgren in Finland in 1938 using iron and other metals (5). Mitsubishi Gas Chemical Co. introduced Ageless® sachets in 1977 containing reduced iron powder, salt, and trace ingredients. This technology has developed with a wide variety of formulations being provided by Mitsubishi and other companies in Japan. Multisorb Technologies, Inc. manufactures the FreshPax™ series of iron-based oxygen absorbers, which are also marketed in the United Kingdom, and Standa Industrie of Caen manufactures a range of sachets under the name ATCO in France. It was estimated that around 12 billion such sachets were manufactured in Japan in 2001, and it is predicted that sales for 2007 will be on the order of 14.4 billion in Japan, 4.5 billion in the United States, and 5.7 billion in Europe (6). The global value of this market is predicted to grow from $588 million in 2005 to around $924 million in 2010 (7).

The oxygen scavenging materials can also be bonded to the inside of the package, resulting in even less chance of accidental ingestion or incorporation into food preparations. Mitsubishi Gas Chemical Co. introduced a hot-melt adhesive system for sachets, and Multisorb Technologies, Inc. market an adhesive label (FreshMax®), which is sufficiently thin that it can be applied with conventional labeling machinery (see Figure 1). The contents of oxygen-scavenging sachets differ, depending on the relative humidity of the product, usually food. Some are designed to operate at refrigerator or even freezer temperatures. Characteristics of some commonly used sachets are shown in Table 1. The form of triggering is one of the key aspects of oxygen scavengers of any type. It is preferable that the scavenging composition can be activated when required, because premature reaction with atmospheric air leads to loss of scavenging capacity and potential failure in the sealed package.

Figure 1. FreshMax® oxygen-absorbing label attached to the inside of processed meat package. (Courtesy of Multisorb Technologies, Inc.)

Combination sachets are also available from Mitsubishi Gas Chemical Co. and EMCO Packaging Systems (UK). Some of these release carbon dioxide while taking up oxygen. These are normally based on ascorbic acid and sodium bicarbonate. Ageless® E sachets contain lime as well as iron to absorb CO_2 and oxygen and are used in roasted-coffee packs.

Ethanol and Sulfur Dioxide Emitters. Low concentrations of ethanol, 1–2% in bakery products, have been shown to suppress the growth of a range of common molds. Higher levels are necessary to suppress bacteria and yeasts, and the effectiveness is dependent on the water activity of the product. Freund Corp. (Japan) has developed two ethanol-emitting sachets which release ethanol vapor in response to the absorption of water vapor from the food headspace. Antimold-mild® (also known as Ethicap) sachets contain food-grade ethanol (55%) adsorbed in silica powder (35%). The sachets consist of films of varying permeabilities to provide some control of the rate of ethanol release. Sachets are available from Freund in sizes of 0.6–6G containing 0.33–3.3 g of ethanol. The size of the sachet required can be calculated from knowledge of the water activity and weight of the product and the shelf life desired.

Food packages containing ethanol-releasing sachets should have an ethanol vapor permeability of $<2\,\text{g/m}^2$ per day at 30°C (Freund Corp.). Packaging films used with ethanol generators can be as simple as oriented polypropylene/polypropylene, but polyethylenes are too permeable for use. Ethicap has been investigated with pita bread, apple turnovers, strawberry layer cakes, and madeira and cherry cream cake. It is used widely in Japan with semimoist or dry fish products.

The second type of ethanol emitting sachet marketed by Freund Corp., under the name Negamold®, is a combined oxygen scavenger and ethanol emitter. This type of sachet is not widely used. Ethanol-emitting sachets are manufactured by other companies in Japan, including Ohe Chemicals Inc. (Oytech L). Pira International Ltd. estimated that the total global market (predominantly in Japan) in 2005 for these types of sachets was $37 million, and it forecasts growth to $65 million by 2010 (8).

Sulfur-dioxide-releasing pads are available for use in the transportation of cartons of table grapes. Grapes are readily separated from their stalks by the action of fungi in the moist atmosphere of polyethylene-lined cartons. Microporous pads containing sodium metalbisulfite (~7 g) placed on top of the fruit release sulfur dioxide as water vapor is absorbed. If the uptake of water vapor is too rapid, as is often the case, the rapid premature hydrolysis results in excessive levels of sulfur dioxide, resulting

Table 1. Properties of Some Oxygen Scavenging Sachets[a]

Type	Trigger	A_w	Time Days at 25°C (other)	Substrate Base	Additional Effect
FreshPax™					
B	Water	>0.65	0.5–2	Fe	
D	Self	>0.7	0.5–4 (2 → −20)	Fe	
R	Self	All	0.5–1	Fe	
M	Self	>0.65	0.5–2	Fe	+CO_2
Ageless®					
Z	Self	>0.65	1–3	Fe	
S	Self	>0.65	0.5–2	Fe	
SS	Self	>0.85	2–3 (0 → −4)	Fe	
			10 (−25)	Fe	
FX	Water	>0.85	0.5–1	Fe	
G	Self	0.3–0.5	—	Ascorbic acid	+CO_2
E	Self	<0.3	3–8	Fe/lime	−CO_2
Negamold®	Water	>0.85	—	Fe/ethanol	Ethanol

[a] Data from technical information from manufacturers and references 5 and 22.

further in bleaching of the grapes, commencing at the bottom of the berries. Such pads are largely manufactured in Chile by companies such as Productions Quimicos & Alimenticos Osku SA, of Santiago (e.g., OSKU-VID® Grape Guard), and are widely distributed internationally.

Ethylene Absorbers. Ethylene-absorbing sachets, sometimes made of steel mesh, are available and follow from the variety of porous slabs and blankets developed for ethylene removal in cool stores and shipping containers. Several minerals are used to contain potassium permanganate in the form of purple beads or in other shapes. Typical inert substrates include perlite, alumina, silica gel, and vermiculite containing 4–6% potassium permanganate. The manner in which these might be used should be checked because potassium permanganate is toxic. There are many manufacturers such as Ethylene Control, Inc. of Salinas, CA and Purafil Co. of Chalamblee, GA. The efficiency of such absorbers will depend on the product, the surface area of the substrate, and possibly any water condensation.

Ethylene-absorbing sachets based on other principles for destruction of the ethylene, such as the use of carbon activated with a palladium catalyst, have also been reported (8). Nonspecific absorbents have also been marketed in sachet form in Japan for removal of gases such as ethylene, carbon dioxide, and unwanted odors from food packs. A product based on activated carbon is marketed by Mitsubishi Gas Chemical Co. (Ageless® C-P, which includes slaked lime). The capacity of such absorbents for ethylene at physiological concentrations (e.g., <1 ppm, 95% RH) and at the typically low temeprartures used for storage needs to be defined.

Plastic-Based Active Packaging Materials

Moisture Control. Moisture in packages may be in the form of liquid (condensate or drip/weep) or as the vapor. Desiccants remove both forms of water, although they are designed to remove the vapor. The simple form of liquid moisture sorption has been provided by drip-absorbent sheets consisting of two layers of nonwoven polyolefin, divided by heat seals into pouches containing polyacrylate superabsorbent polymers. These sheets are used under chicken or turkey pieces and sometimes under red meats to absorb drip during display. Other uses are to absorb drip from seafood, especially when air-freighted to avoid corrosion of airframes caused by spilling. These sheets are widely available from companies such as Maxwell Chase Inc. (Douglasville, USA) (Fresh-R-Pax™).

Although superabsorbent polymers can absorb up to 500 times their own weight of water, they do not function as such rapid absorbents for water vapor. Condensation can be prevented by use of multilayer plastic sheets containing a humectant or moisture absorbent material between the layers, such as those developed by Showa Denko K.K. (Japan) (9) and CSIRO (Australia) (10). At least one water vapor absorbent sheet has been produced for domestic use, known as Pichit. This consisted of an envelope of polyvinyl alcohol film sandwiching a glycol and carbohydrate in a strong water vapor absorber (see Figure 2). It is manufactured by Shoko Co. Ltd. (a subsidiary of Showa Denko K.K) and sold as a perforated role and as packs of single sheets for wrapping food portions in domestic refrigerators. Süd Chemie produce a desiccant polymer (2AP®) for use in a wide range of package formats including tubes and caps, and have patented approaches for producing such materials by inclusion of microchannels and humectants or desiccants.

Oxygen Scavenging. Oxygen scavenger films have been a goal of packaging industry researchers since the work of the American Can Co. in 1976 with the palladium-catalyzed reaction of oxygen with hydrogen. That package,

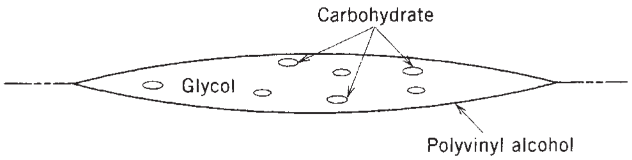

Figure 2. Pichit bilayer sheet for absorbing water from food portions. (Courtesy of Showa Denko K. K.)

marketed by American Can Co. as Maraflex, was not widely used commercially because of its complexity and its requirement for flushing with a nitrogen/hydrogen mixture. Oxygen-scavenging films or other plastic materials offer the opportunity to prevent oxygen ingress to the package by permeation as well as removing that originally present inside the package. They also offer the potential for package fabrication, filling, and sealing without the need for insertion or attachment of a sachet. Despite the substantial international R&D effort over the last two decades (11), only a few oxygen-scavenging film technologies have been commercialized, such as Sealed Air's light-activated Cryovac® OS System, which is based on the transition metal-catalyzed oxidation of rubber-like unsaturated polymeric components.

Oxygen-scavenging closure products are marketed by a number of companies, including Silgan White Cap (Stamford, Connecticut) (Plasti-Twist®), Grace Darex® Packaging Technologies (a business unit of W. R. Grace Company), and Bericap (O2S®). The Grace Darex® compositions, exemplified by Daraform® 6490, include up to 7% sodium sulfite and 4% sodium ascorbate in a polyolefin base (12), and they have been used by Heineken and Anheuser-Busch beer produced under license in the United Kingdom. More recently, Grace Darex® launched Celox™, a closure liner that is claimed by the manufacturer to provide a substantially faster scavenging rate. Toyo Seikan Kaisha Ltd. (Yokohama, Japan) has taken a different approach using a reduced iron base for reaction with oxygen. The crown closure consists of three layers with the middle, reactive layer separated from the beer by a microporous polymer layer. The scavenging reaction involves water vapor from the beer, especially during pasteurization, and premature reaction is presented by keeping the composition dry prior to use. The closure sealant designs can be compared by reference to Figure 3, which represents the Grace approach (top) and the Toyo Seikan Kaisha approach (bottom).

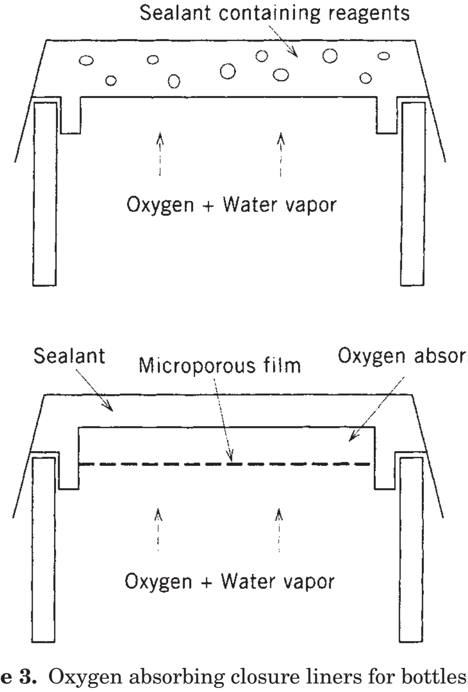

Figure 3. Oxygen absorbing closure liners for bottles. Top: W. R. Grace type. Bottom: Toyo Seikan Kaisha Ltd. type.

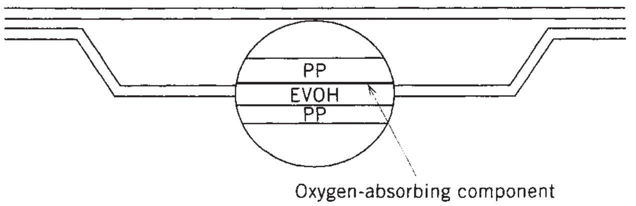

Figure 4. Oxygen-absorbing thermoformed multilayer tray for semiaseptic rice (PP, polypropylene; EVOH, ethylene vinyl alcohol copolymer). (Courtesy of Toyo Seikan Kaisha Ltd.)

The first thermoformable oxygen-scavenging sheet (Oxyguard™) was commercialized in 1994 by Toyo Seikan Kaisha Ltd. for use in retortable plastics trays. The oxygen scavenging layer is between the EVOH (ethylene vinyl alcohol) oxygen-barrier layer and the inner, permeable polypropylene layer. Figure 4 shows this structure diagramatically. The scavenging process involves moisture-activated reaction of oxygen with iron particles embeded in the polypropylene layer. Similar thermoformable oxygen-scavenging polymeric materials are also produced by Ciba Speciality Chemicals (SHELFPLUS® O2).

Active Oxygen Barriers. More recently, oxygen-scavenging has been used to improve the barrier performance of PET containers. The Oxbar™ technology involves the transition-metal-catalyzed oxidation of polymeric materials such as MXD6 Nylon, and it was originally developed by CMB Technologies plc UK for making PET bottles oxygen-impermeable while scavenging oxygen from the packaged beverage. This technology is now the basis of PET bottles manufactured by Constar International Inc. (Philadelphia, Penn.), as well as by other packaging companies, such as Amcor Ltd. (Melbourne, Australia), under license. Other approaches based on the use of transition-metal-catalyzed oxidation to produce PET bottles having enhanced oxygen-barrier properties include those of BP Amoco (Amosorb®), Valspar (ValOR™), and Toyo Seikan Kaisha Ltd. (Oxyblock, also referred to as SIRIUS101). M&G has developed a technology involving incorporation of iron particles into the PET, and it produces actively enhanced oxygen barrier PET bottles (ActiTUF®).

Antimicrobial Films. Antimicrobial agents, fungicides, and natural antagonists are applied to harvested produce in the form of aqueous dips or as waxes or other edible coatings. Their roles and their U.S. regulatory status have been tabulated (13). Besides produce, foods with cut surfaces are subject to largely superficial microbial attack and some cheeses are packaged with wrappings or separating films (sliced cheese) containing sorbic acid. Although many foods are subject to rapid attack at the cut surfaces, potentially useful antimicrobial packaging films are still largely a subject of research (14–16).

Sinanen Zeomic Co. Ltd. in Japan produces a synthetic zeolite, Zeomic, which has silver ions bonded into the

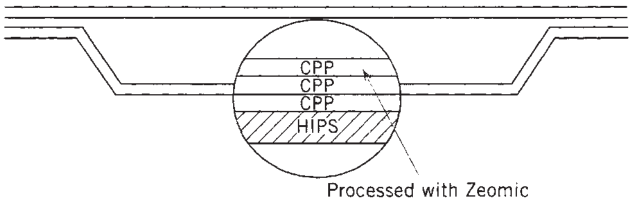

Figure 5. Antimicrobial thermoformed tray containing Zeomic silver zeolite heat-seal layer. (CPP, cast polypropylene; HIPS; high-impact polystyrene). (Courtesy of Sinanen Zeomic Co. Ltd.)

surface layers of the pores. The zeolite is dispersed in, for instance, a polypropylene or polyethylene 3- to 6-μm-thick layer and protrudes into the package from this layer as indicated in Figure 5. Other layers provide package strength and permeation barrier as required. Liquid in the food is meant to have access to the zeolite, and it appears that the mode of action is uptake of silver ion that dissolves in the aqueous phase (17). The zeolite has been found to be highly effective against several vegetative bacteria, especially dispersed in water, saline solution, or oolong tea. The effect of amino acids in food proteins is the subject of research (18). Zeomic is approved as a Food Contact Substance by the U.S. FDA and can be used in any type of food packaging resin product. The Zeomic product is distributed outside Japan and in parts of Southeast Asia by AgION Technologies Ltd. (Wakefield, MA).

Odor Absorption. Since odors can be sensed at very low levels, there is the opportunity to use packaging materials to reduce the concentrations of these components in otherwise acceptable foods (see Aroma barrier testing). The inclusion of molecular sieves and other agents capable of adsorbing odorous volatile compounds has been explored. Packaging technologies capable of removing specific classes of odorous compounds through chemical reaction have also been investigated with several patents in this area relating to elimination of aldehydes having been granted to Dupont and Cellresin Technologies LLC. A different approach has been patented by Minato Sangyo Co. Ltd., based on ascorbic acid and an iron salt dispersed in the plastic, and is aimed at removing amine or sulfur compounds from fish in domestic refrigerators.

Thermal Control. Microwavable packages containing foods with differing reheating requirements can be made to crisp or brown some components by use of susceptors and reduce the heating of other components by use of foil shields. Susceptors normally consist of a vacuum-deposited layer of aluminum, typically with a light transmission of 50–60%, or a 12-μm-thick film of biaxially oriented PET. The film is laminated to paper or paperboard by means of an adhesive. In a microwave field, susceptors have reached a temperature of 316°C in the absence of food, or 223°C in pizza packs (19). These temperatures have caused regulatory authorities to investigate the stability of all components of susceptor films, particularly the adhesives. The microwave field strength can be intensified by specific distributions of foil patches in the dome lids of microwaveable packs.

Beverage cans can be made either "self-heating" or "self-cooling" by means of chemical reactions in compartments separated from the beverage (20). Sake is heated by the exothermic reaction of lime with water in aluminum cans. This process is potentially valuable in the vending machine market. Cooling is achieved by the endothermic dissolution of ammonium nitrate and ammonium chloride with water. Both of these thermal effects are brought about by shaking and thus are unsuitable for use with carbonated beverages.

RESEARCH AND DEVELOPMENT

Active packaging materials have been evolving through a series of innovations dating from the late 1980s, with many hundreds of primary patent applications having been filed for both chemical principles and package designs relating to oxygen scavenging alone. Despite considerable industry interest, so far very few of these innovations have led to commercial products. There is a substantial amount of innovation in progress, especially in the area of active plastic-based packaging incorporating in-polymer chemistry. Methods of activating chemical systems that are stable during thermal processing are particularly interesting. The benefits of using active packaging need to be established clearly, and performance claims for these technologies need to be supported by unambiguous, independent research results demonstrating their effectiveness.

SUMMARY

The emergence of active packaging has required reappraisal of the normal requirement that the package should not interact with the packaged product. For example, the introduction of a new EU Regulation (1934/2004) repealing the earlier relevant EU Directives for food contact materials (89/109/EEC and 80/590/EEC) attempts to reconcile the EU's philosophy that food contact materials should not give rise to chemical reactions that alter the initial composition or organoleptic properties of the food, while recognizing the potential benefits of active packaging technologies to enhance the preservation of packaged food. The introduction of this new EU Regulation paves the way for more rapid uptake of these new packaging materials (21). Active packaging introduced so far represents substantial fine-tuning in the matching of packaging properties to the requirements of the product. Accordingly, it will be seen increasingly in niche markets and in wider applications in which specific problems are inhibiting the marketing of the product. Indeed, the specific examples being introduced are too numerous to describe here, and the reader is referred to the Bibliography and the Further Reading sections.

BIBLIOGRAPHY

1. G. L. Robertson, *Food Packaging: Principles and Practice*, Taylor & Francis, Boca Raton, FL, 2006, pp. 286–289.

2. T. P. Labuza and W. M. Breene, *J. Food Proc. Preservat*. **13,** 1–69 (1989).
3. Y. Abe and Y. Kondoh, "Oxygen Absorbers" in A. L. Brody, ed., *Controlled/Modified Atmosphere/Vacuum Packaging of Foods*, Food and Nutrition Press, Trumbull, CT, 1989, pp. 149–174.
4. B. V. Chandler and R. L. Johnson, *J. Sci. Food Agric.* **30,** 825–832 (1979).
5. Y. Abe, "Active Packaging—A Japanese Perspective" in *Proceedings International Conference Modified on Atmosphere Packaging*, Camden Food and Drink Research Association, Chipping Camden, U.K., 1990, Part 1.
6. Pira International Ltd., *Active & Intelligent Pack News* **2**(11), 5 (2004).
7. Pira International Ltd., *Active & Intelligent Pack News* **3**(25), 5 (2005).
8. N. Takahashi and K. Yoshie, U.S. Patent No. 5015282, 1991.
9. M. Takuno, U.S. Patent No. 5143773, 1992.
10. M. R. Gibberd and P. J. Symons, International Patent Application, WO 05/053955, 2005.
11. M. L. Rooney, "Overview of Active Packaging" in M. L. Rooney, ed., *Active Food Packaging*, Blackie Academic and Professional, Glasgow, UK, 1995, pp. 1–37.
12. F. N. Teumac, The History of Oxygen Scavenger Bottle Closures in M. L. Rooney, ed., *Active Food Packaging*, Blackie Academic and Professional, Glasgow, 1995, pp. 193–202.
13. S. L. Cuppett, "Edible Coatings as Carriers of Food Additives, Fungicides and Natural Antagonists" in J. M. Krochta, E. A. Baldwin, and M. Nisperos-Carriedo, eds., *Edible Coatings and Films to Improve Food Quality*, Technomic Publishing, Lancaster, PA, 1994, pp. 123–124.
14. R. D. Joerger, *Packag. Technol. Sci.* **20**, 231–274 (2007).
15. P. Suppakul, J. Miltz, K. Sonneveld, and S. W. Bigger, *J. Food Sci.* **68**, 408–420 (2003).
16. J. W. Rhim and P. K. Ng, *Crit. Rev. Food Sci. Nutr.* **47**, 411–433 (2007).
17. J. H. Hotchkiss, "Safety Considerations in Active Packaging" in M. L. Rooney, ed., *Active Food Packaging*, Blackie Academic and Professional, Glasgow, 1995, pp. 238–255.
18. T. Ishitani, "Active Packaging for Foods in Japan" in P. Ackermann, M. Jägerstad, and T. Ohlsson, eds., *Food and Packaging Materials—Chemical Interactions*, Royal Society of Chemistry, Cambridge, UK, 1995, pp. 177–188.
19. G. L. Robertson, *Food Packaging: Principles and Practice*, Taylor & Francis, Boca Raton, FL, 2006, pp. 280–282.
20. G. L. Robertson, *Food Packaging: Principles and Practice*, Taylor & Francis, Boca Raton, FL, 2006, pp. 297–298.
21. J. Heckman, *Active and Intelligent Packaging—A European Anomaly*, November 2005. http://www.packaginglaw.com/index_fcn.cfm?id=38&pf=yes(2005) (accessed March 4, 2008).
22. J. P. Smith, H. S. Ramaswamy, and B. K. Simpson, Trends in Food Sci. Technol. 111–118 (Nov. 1990).

Further Reading

G. L. Robertson, "Active and Intelligent Packaging," Chapter 14 in *Food Packaging: Principles and Practice*, Taylor & Francis, Boca Raton, FL, 2006, pp. 286–309.

W. D. van Dongen, A. R. de Jong, and M. A. H. Rijk, "European Standpoint to Active Packaging—Legislation, Authorization and Compliance Testing," Chapter 9 in *Packaging for Nonthermal Processing of Food*, J. H. Han, ed., Blackwell Publishing Professional, Ames, IA, 2007.

A. Scully and M. Horsham, "Emerging Packaging Technologies for Enhanced Food Preservation," *Food Sci. Technol.* **20**, 16–19 (2006).

J. H. Han, ed., *Innovations in Food Packaging*, Elsevier Academic Press, San Diego, CA, 2005.

C. L. Wilson, ed., Intelligent and Active Packaging for Fruits and Vegetables, CRC Press, Boca Raton, FL, 2007.

A. L. Brody, E. R. Strupinsky, and L. R. Kline, *Active Packaging for Food Applications*, Technomic, Lancaster, PA, 2001.

M. L. Rooney, ed., *Active Food Packaging*, Blackie Academic and Professional, Glasgow, 1995.

T. P. Labuza and W. M. Breene, "Applications of Active Packaging for Improvement of Shelf-life and Nutritional Quality of Fresh and Extended Shelf-Life Foods," *J. of Food Process. Preserv.*, **13**, 1–69 (1989).

A. López-Rubio, E. Almena, P. Hernandez-Muñoz, J. M. Lagarón, R. Catalá, and R. Gavara, "Overview of Active Polymer-Based Packaging Technologies for Food Applications," *Food Rev. Int.* **20**(4), 357–387, 2004.

ADHESIVE APPLICATORS

Adhesive applicating equipment used in packaging applications is available in a vast array of configurations to provide a specific means of sealing containers. The type of adhesive equipment chosen is determined by several factors: the class of adhesive (cold waterborne or hot-melt), the adhesive applicating unit and pump style that is most compatible with the adhesive properties, and production line demands. The variables in the packaging operation are matched with the available adhesives and equipment to achieve the desired results.

PACKAGING ADHESIVES

Adhesives used in packaging applications today are primarily cold waterborne or hot-melt adhesives (see the Adhesives article).

Cold waterborne adhesives can be broadly categorized into natural or synthetic. Natural adhesives are derived from protein (animal and casein) and vegetable (starch and flour) sources. Synthetic-based adhesives (primarily resin emulsions) have been gradually replacing natural adhesives in recent years. The liquid "white glue" is generally composed of protective poly(vinyl alcohol) or 2-hydroxyethyl cellulose colloids and compounded with plasticizers, fillers, solvents, or other additives. Also, new copolymers have been developed and used to upgrade performance of cold emulsion adhesives in dispensing characteristics, set time, and stability.

Cold adhesives have good penetration into paper fiber and are energy efficient, especially when no special speed of set is required. Hot-melt adhesives are thermoplastic polymer-based compounds that are solid at room temperature, liquefy when heated, and return to solid form after cooling. They are blended from many synthetic materials to provide specific bonding characteristics. Most hot melts consist of a base polymer resin for strength, a viscosity

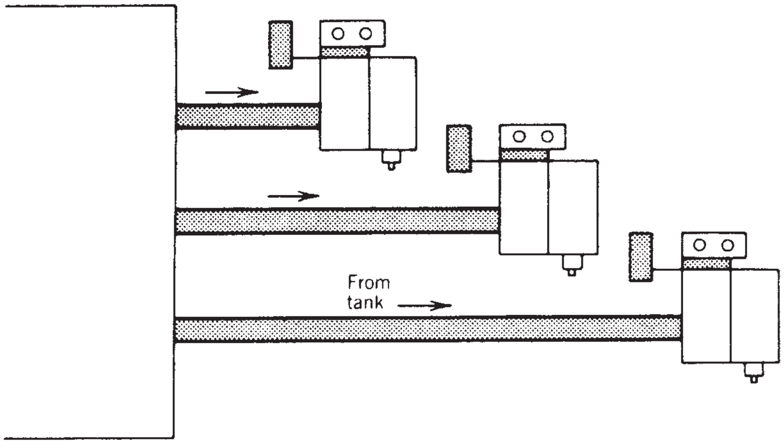

Figure 1. Noncirculating gun installation (parallel) system.

control agent such as paraffin, tackifying resins for greater adhesion, and numerous plasticizers, stabilizers, antioxidants, fillers, dyes, and/or pigments.

Hot melts are 100% solid; they contain no water or solvent carrier. This offers several advantages: rapid bond formation and short set time because heat dissipates faster than water evaporates, shortened compression time, and convenient form for handling and long-term storage. Being a thermoplastic material, hot melts have limited heat resistance and can lose their cohesiveness at elevated temperatures.

ADHESIVE APPLICATING EQUIPMENT CLASSIFICATION

Both cold waterborne and hot-melt adhesive application systems are generally classified as noncirculating or circulating. Noncirculating systems are the most common (see Figure 1). They are identified easily because each gun in the system is supplied by its own hose. The noncirculating system is often referred to as a "dead-end system" because the hose dead ends at the gun. An offshoot of the noncirculating system is the internally circulating hot-melt system (see Figure 2). Circulation occurs between the pump and manifold, but from the manifold to the gun it is the same as a dead-end system.

Circulating systems are used to some extent in applications that require a standby period, as in a random case sealing operation, when some setup time is needed. A circulating system is identified by the series installation of the hoses and guns (see Figure 3). In the typical circulating installation, many automatic extrusion guns are connected in series with the hot-melt hose. Molten material is siphoned out of the applicator tank and pumped into the outlet hose to the first gun in the series. The material then flows from the first gun to the second gun and continues on until it passes through a circulation valve and back into the applicator's tank. The circulation valve permits adjustment of the flow of material.

COLD-GLUE SYSTEMS

Most cold-glue systems consist of applicator heads to apply adhesive either in bead, spray, or droplet patterns; fluid hoses to carry the adhesive to the applicator head from the tank; a pressure tank of lightweight stainless steel that can include a filter, quick-disconnect couplings for air and glue, a pressure relief valve and an air pressure gauge; and a timing device to control the adhesive deposition.

The applicator heads are controlled by either an automatic pneumatic valve or a manually operated hand valve. The bead, ribbon, or spray patterns can be dispensed using multiple-gun configuration systems with resin or dextrin cold adhesives. Cold-adhesive droplet guns dispense cold mastic and plastisols, and they come in a wide variety of configurations for spacing requirements. In bead and ribbon cold glue extrusion, the tips either make contact or close contact with the substrate. Spray valves emit a mistlike pattern without touching the substrate's surface.

HOT-MELT SYSTEMS

Hot-melt application equipment performs three essential functions: melting the adhesive, pumping the fluid to the point of application, and dispensing the adhesive to the substrate in a desired pattern.

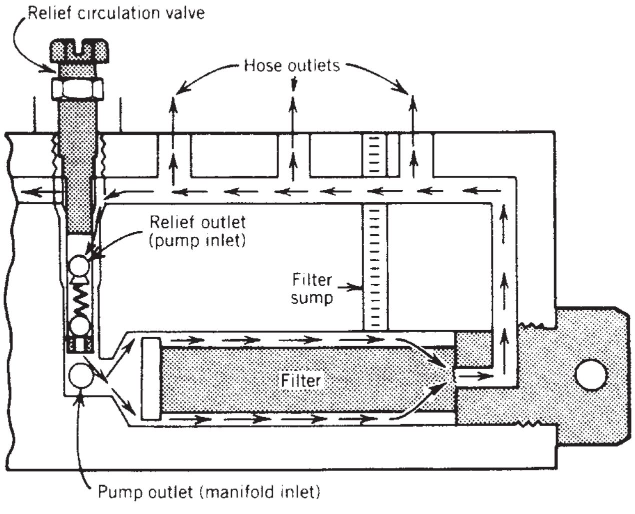

Figure 2. Internally circulating system.

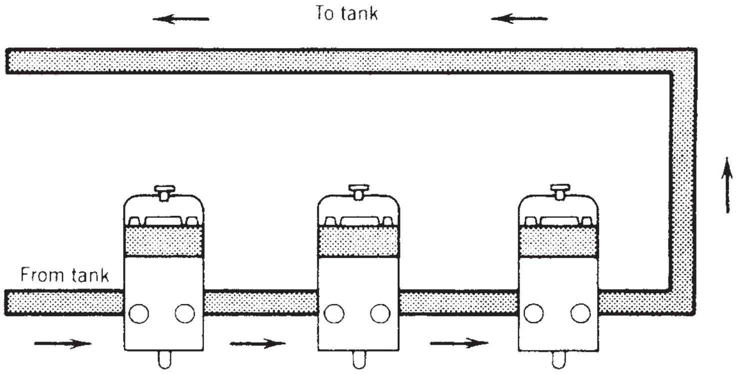

Figure 3. Circulating gun installation (series) system.

Melting Devices. Tank melters are the most commonly used melting unit in packaging applications. Best described as a simple open heated pot with a lid for loading adhesive, a significant feature of tank melters is their ability to accept almost any adhesive form. The tank melter is considered the most versatile device for accepting hot melts with varying physical properties of adhesion and cohesion.

In tank melters, the tank size is determined by melt rate. Once melt rate objectives or specifications are determined, the tank size is fixed. Larger tanks have greater melt rates than smaller tanks. Holding capacities range from 8 lb (3.9 kg) in the smaller units to more than several hundred pounds (>90 kg) in the larger premelting units (see Figure 4).

The tanks are made of highly thermal conductive material, such as aluminum, and they are heated by either a cast-in heating element or a strip or cartridge-type heater. The side walls are usually tapered to provide good heat transfer and to reduce temperature drop.

Adhesive melts first along the wall of the tank as a thin film. Internal circulation currents from the pumping action assist in transferring heat throughout the adhesive held in the tank. Even when the hot melt is entirely liquid, there will be temperature differences within the adhesive. Under operating conditions, adhesive flows along tank surfaces and absorbs heat at a faster rate than it would if allowed to remain in a static condition. Even though adhesive in the center of the tank is cooler, it must flow toward the outer edges and pick up heat as it flows into the pumping mechanism.

Grid melters are designed with dimensional patterns resembling vertical cones, egg crates, honeycomb shapes, and slotted passages arranged in a series of rows. Such an arrangement creates a larger surface area for heat transfer. The grid melter is mounted above a heated reservoir and pump inlet (see Figure 5).

The grid melting process is exactly the same as the tank melting process; however, the film of adhesive flows along with surfaces and flows through ports in the bottom of the grid. In this way, the solid adhesive will rest above the grid and force the molten liquid through the grid. The grid is designed for deliberate drainage of liquid adhesive to maintain a thin film adjacent to the heated surfaces. This thin film provides for a greater temperature difference than normally found in a tank, and a much larger heat flow is attainable. The grid melter also achieves a much greater melt rate for a given size or area of melter. It can heat higher performance adhesives because it provides relatively uniform temperature within the melter

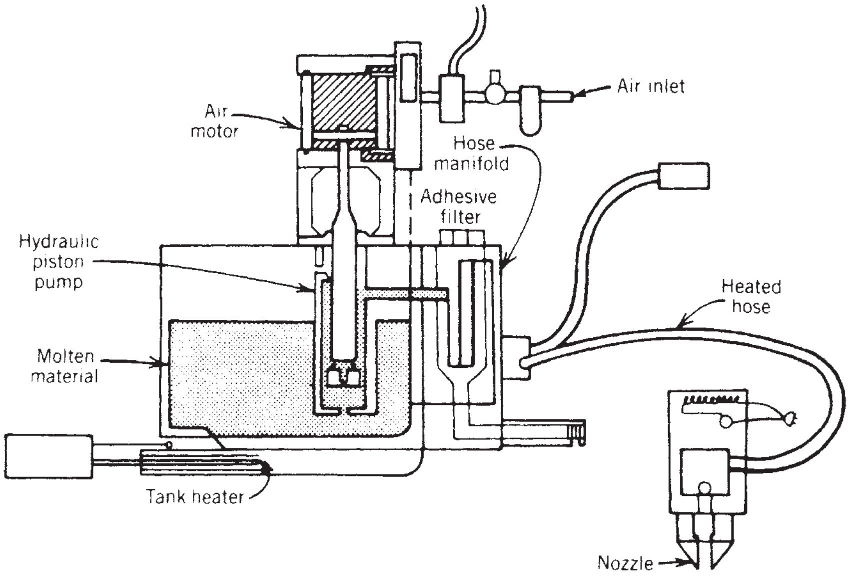

Figure 4. Tank-type hot melt unit.

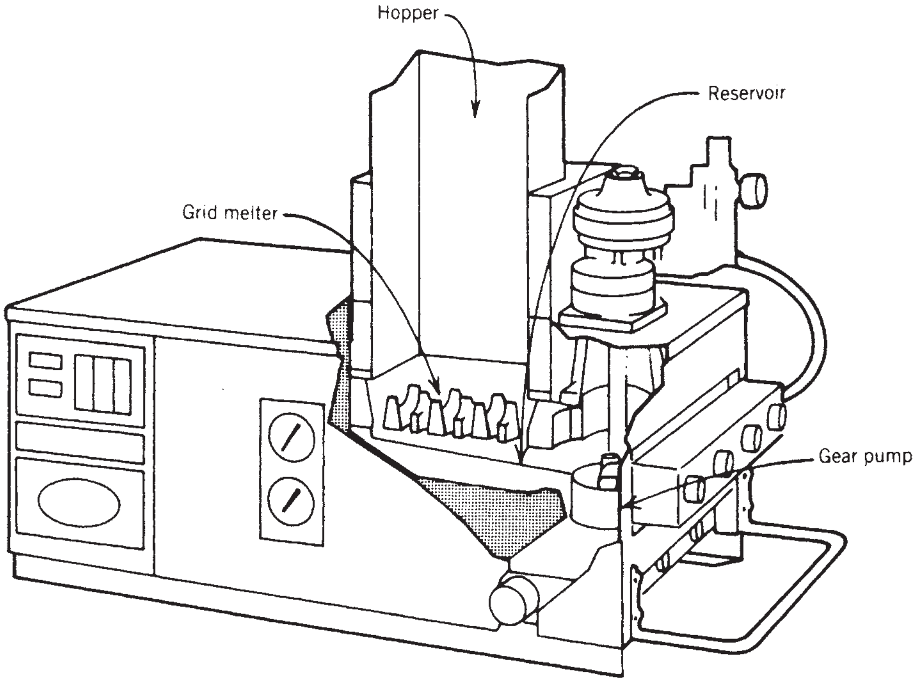

Figure 5. Grid melter hot melt unit.

itself, which also minimizes degradation. These features are achieved with some sacrifice of versatility because the adhesives must normally be furnished as pellets or other more restricted geometries.

Between each row of patterned shapes are passageways that open into a reservoir beneath the melter. The passageways ensure a constant and unobstructed flow of molten material to the reservoir below.

The reservoir has a cast-in heating system similar to that of most tank applicators. The temperature control can be separate from the grid melter. The floor of the reservoir is sloped so that molten material is gravity-fed toward the pump inlet.

Grid melters are available with optional hopper configurations. The major difference, other than capacity, is the ability to keep the material "cool" or "warm" before it reaches the grid. The cool hopper merely supplies adhesive and the material becomes molten at the grid. The molten time of the material is shortened before actual application. The cool hopper works well with hot melts of relatively high softening and melting points.

Warm hoppers are insulated and attached to the grid so that heat is radiated from the hopper through the hopper casting. Materials that are better formulated to melt in a zone-heating process, such as hot melts with medium to low melting points, and pressure-sensitive materials work well with the warm hopper design.

The tank capacities of both tank and grid melting devices can be extended with premelt tanks. They may be equipped with their own pumping devices or act on a demand signal from a level sensor in the applicator tank; however, all perform like tank units to keep hot melt materials molten at controlled temperatures. One of the newer premelting devices is in the bulk melter unit (see Figure 6).

Bulk melting systems are designed to dispense hot-melt adhesives and other highly viscous thermoplastic materials in applications requiring a high volume or rapid delivery of material. Units can be used as direct applicators or as premelters as part of a central feed system.

The material is pumped directly from the drum or pail in which it is shipped. This provides ease of handling and lower material costs of bulk containers. In premelting

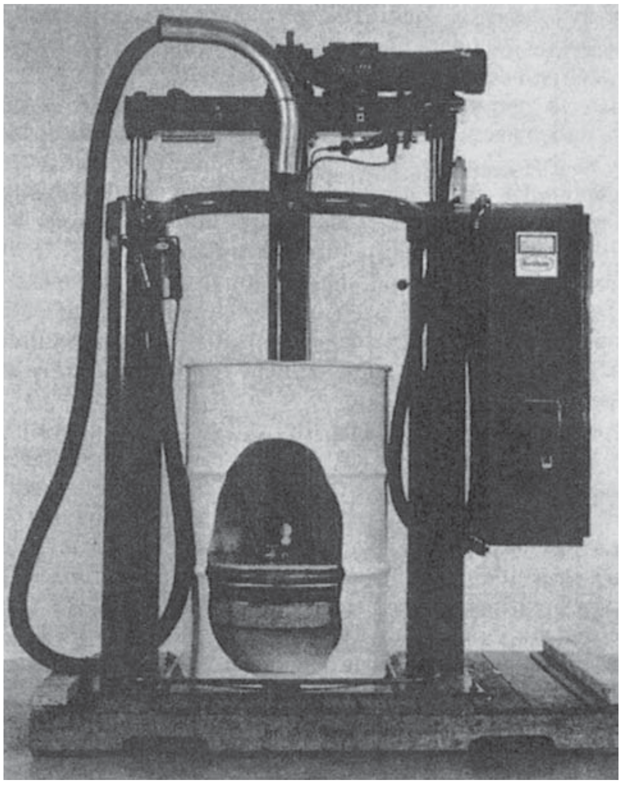

Figure 6. Cutaway of drum showing bulk melter system.

applications, the bulk melter system preheats the material before it is pumped into heated reservoirs. The material is then pumped from the reservoirs to the application head on demand.

The electrically heated platen is supported by vertical pneumatic or hydraulic elevating posts. The platen melts the hot melt material on demand directly from the container and forces it into the pump inlet.

The platen can be a solid one-piece casting, or in the larger units, several grid or fin sections. It is important that the platen size match the inside diameter (ID) of the drum or pail. The platen is protected by one or more seals to help prevent leakage.

Pressurized melters, or screw extruders, are among the earliest designs used in hot-melt applicators. Imitating injection-molding machinery (see the Injection molding article), early screw-extruder and ram-extrusion handgun systems had limited success because they were designed only for continuous extrusion. The closed-system and screw-extrusion design allows for melting and pumping of high-viscosity, highly degradable materials.

Extruder equipment is now adapted to intermittent applications; it consists of a hopper feeder, a high-torque dc-drive system, a heated barrel enclosing a continuous flight screw, and a manifold area (see the Extrusion; Extrusion coating article). Heating and drive control systems can be controlled independently by a microprocessor. Temperatures and pressure are monitored by digital readouts. Adapted for high-temperature, high-viscosity, or degradation-sensitive adhesives, the new technological advances in extruder equipment give greater potential for adhesive applications such as drum-lid gasketing, automotive-interior parts, and self-adhering elastic to diapers (see Figure 7).

Pumping Devices and Transfer Methods. Once the hot-melt material is molten, it must be transferred from the tank or reservoir to the dispensing unit. Pumping mechanisms are of either piston or gear design.

Piston pumps are air driven to deliver a uniform pressure throughout the downstroke of the plunger. Double-acting piston pumps maintain a more consistent hydraulic pressure with their ability to siphon and feed simultaneously. Piston pumps do not provide complete pulsation-free output, but they are well suited for fixed-line speed applications.

Gear pumps are available in several configurations: spur-gear, gerotor, and two-stage gear pump.

Spur-gear pumps have two counterrotating shafts that provide a constant suction and feeding by the meshing action of the gear teeth (see Figure 8). They are becoming more common because of their versatility in handling a variety of high viscosity materials and their efficient performance in high speed packaging.

Gerotor gear pumps have a different arrangement of gears and larger cavities for the transfer of materials. The meshing action, which occurs on rotation, creates a series of expanding and contracting chambers (see Figure 9). This makes the gerotor pump an excellent pumping device for high-viscosity hot-melt materials and sealants.

The latest patented two-stage gear pump introduces an inert gas in a metered amount into the hot melt. When the adhesive is dispensed and exposes the fluid to atmospheric pressure, the gas comes out in solution, which foams the adhesive much like a carbonated beverage (see Figure 10).

All types of gear pumps provide constant pressure because of the continuous rotating elements. They can be driven by air motor, constant speed electric motors, variable-speed drives, or by a direct power takeoff from the parent machine. PTO and SCR drives allow the pump to be keyed to the speed of the parent machine. As the line speed varies, the amount of adhesive extruded onto each segment of substrate remains constant.

Variations and modifications to the pumping devices incorporate improvements to their transfer efficiency and performance. Multiple-pump arrangements are also offered in hot-melt systems to meet specific application requirements.

The transfer action of the pumping device moves the hot-melt material into the manifold area. There, the adhesive is filtered and distributed to the hose or hoses. In the manifold, there is a factory-set, unadjustable relief valve, which protects the system from overpressurization. The adhesive then passes through a filter to remove contaminants and is directed through the circulation valve. The circulation valve controls the hydraulic pressure in the system. The material circulates to the hose outlets and out the hose to the dispensing devices.

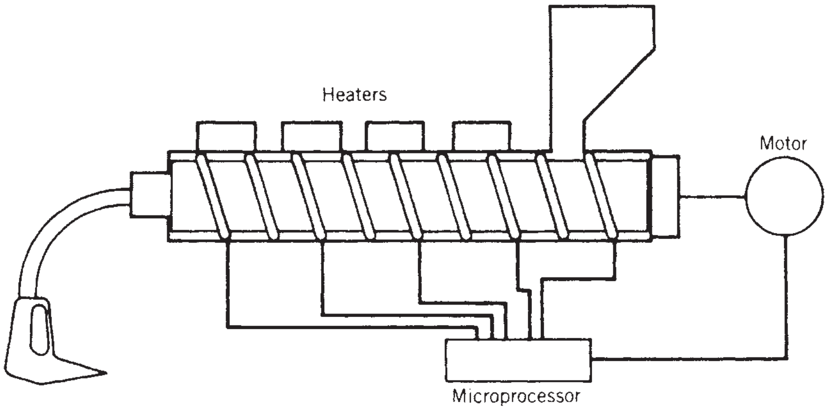

Figure 7. Screw extruder.

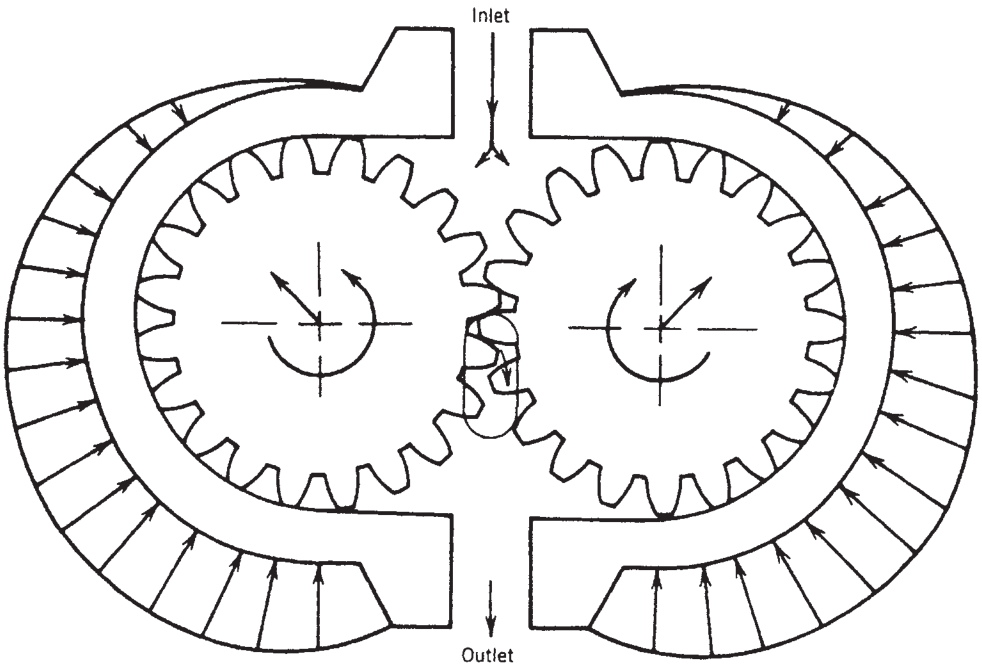

Figure 8. Spur gear pump.

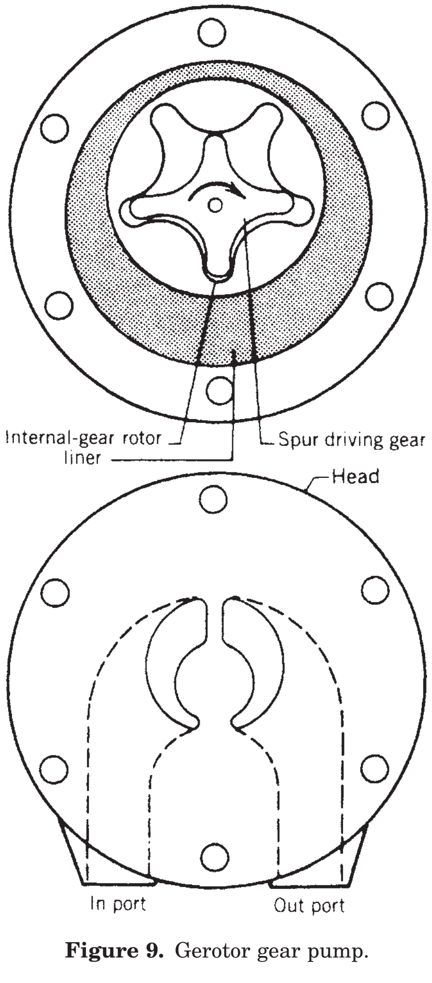

Figure 9. Gerotor gear pump.

For hot-melt systems that require a fluid link between the melting-pump station and the point of application, hot-melt hoses provide a pipeline for transferring the adhesive. Some methods of dispensing (e.g., wheel-type applicators) do not use hoses and will be discussed later.

To withstand operating hydraulic pressures up to 1600 psi (lb/in.^{2}) (11.3 MPa), hot-melt hoses are constructed of aircraft-quality materials. They are flexible, electrically heated, and insulated, and they come in various lengths to accommodate particular installation requirements.

Hot-melt hoses are generally constructed of a Teflon innertube that is surrounded by a stainless steel wire braid for pressure resistance (see Figure 11). Noncirculating hoses maintain temperature with a heating element spirally wrapped around the wire braid throughout the length of the hose. Circulating hoses sometimes use only the wire braid to maintain heat. Wrapped layers of materials such as polyester felt, fiberglass, and vinyl tape provide insulation. For abrasion resistance, the entire hose is covered with a nylon braid.

The hose temperature can be independently controlled and is monitored inside the hose by a sensing bulb, thermistor, or resistance temperature detector.

Dispensing Devices. There are several methods of depositing adhesive onto a substrate once the material is in a molten state. The applicating devices can be categorized as follows:

1. Extrusion guns or heads (automatic and manual).
2. Web-extrusion guns.
3. Wheel and roll dispensers.

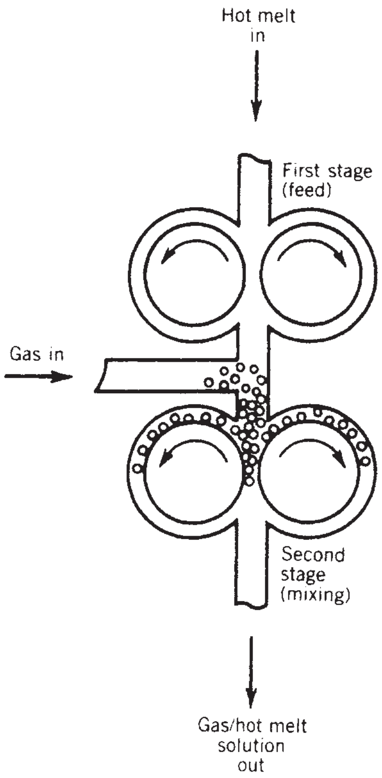

Figure 10. Foaming process of two-stage gear pump.

Extrusion guns are used on most packaging lines. This extrusion method entails applying beads of hot melt from and nozzle. The gun is usually fed from the melting unit through the hose or directly from the unit itself.

Most high-speed applications use automatic guns that are triggered by timing devices or controllers on line with the parent machinery to place the adhesive on a moving substrate.

Automatic guns are actuated by pressure that forces a piston or plunger upward, lifting the attached ball or needle off the matched seat. Molten adhesive can then pass through the nozzle as long as the ball or needle is lifted off its seat by the applied pressure. The entire assembly can be enclosed in a cartridge insert or extrusion module (see Figure 12). Either style, when fitted into or on the gun body, allows for multiple extrusion points from one gun head. Modular automatic guns with up to 48 extrusion modules are possible (see Figure 13).

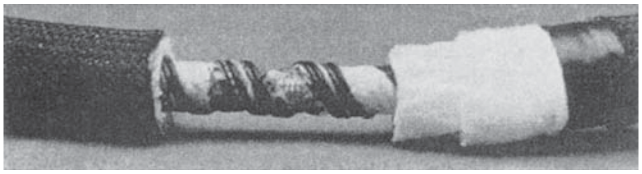

Figure 11. Cutaway of hot-melt hose.

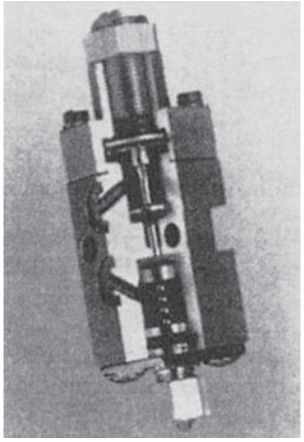

Figure 12. Cutaway of extrusion module.

The pressure to actuate automatic guns is either electropneumatic by means of a solenoid or electromagnetic with a solenoid coil electrically signaled.

Gun temperatures can be controlled thermostatically with cartridge heaters to a maximum of 450°F (230°C). A maximum operating speed of 3500 cycles per minute (58.3 Hz) is possible.

Handgun extrusion is based on the same principles but with manual rather than automatic triggering. A mechanical linkage operated by the gun trigger pulls the packing cartridge ball from its seated position to allow the adhesive to flow through the nozzle.

The extrusion nozzle used on the head or gun is the final control of the adhesive deposited and is used to regulate the bead size. It is designed for varying flow rates that are determined by the nozzle's orifice diameter and length. Classified as low-pressure–large-orifice or high-pressure–small-orifice nozzles, they provide different types of beads. Low-pressure–large-orifice nozzles are specified for continuous bead applications with the large orifice helping to limit nozzle clogging.

High-pressure–small-orifice nozzles are better adapted to applications that require clean cutoff and rapid gun cycling. Drooling and spitting must be controlled for applications such as stitching.

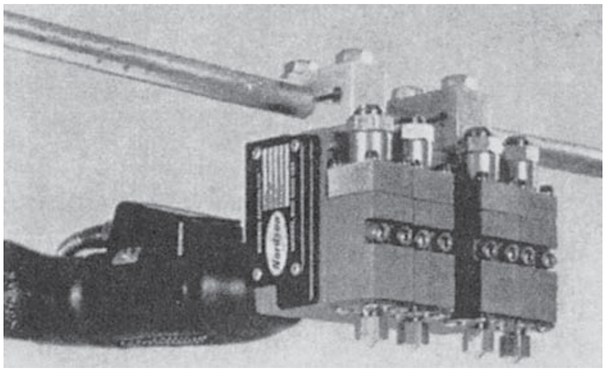

Figure 13. Automatic gun with four modules.

Patterns can be varied even more by selection of multiple-orifice designs, right-angle nozzles for differences in positioning, and spray nozzles for a coated coverage.

Heated in-line filters can be installed between the hose and gun to provide final filtering before adhesive deposition. Independent temperature control helps keep the temperature constant. However, more options are available to provide optimum control by combining a heat exchanger and filter integrally with the gun (see Figure 14). These specialized guns can precisely elevate the temperature of the adhesive material and can hold adhesive temperature within ±2°F (±1.1°C) of the set point. This allows the rest of the system to be run at lower temperatures, which thereby minimizes degradation of the material. The filter assembly incorporated into the service block catches contaminants not trapped by the hot-melt system filter.

Efforts to prevent nozzle clogging and drool have resulted in a zero-cavity gun that replaces the traditional ball-and-set seat assembly with a tapered needle and precision-matched nozzle seat. In traditional guns, the ball-and-seat assembly interrupts adhesive flow some distance from the nozzle, allowing the adhesive left in the nozzle to drool from the tip and char to lodge in the nozzle orifice. With the zero-cavity gun, no separate nozzle is needed. A microadjust feature adjusts the needle for precise flow control. When the needle closes into the nozzle seat, any char is dislodged. In addition, with no nozzle cavity area the cutoff is clean and precise.

Web-extrusion guns have adapted extrusion dispensing technology to deposit a film of hot melt on a moving substrate. Better known as *slot nozzles* or *coating heads*, they are well suited to continuous or intermittent applications. Mounted on an extrusion gun, a heated or non-heated slot nozzle extrudes an adhesive film of varying widths, patterns, and thickness. Pattern blades can be cut to desired patterns. Film thickness is adjustable by using different thickness blades, by stacking of blades in the slot nozzle, or by varying the adhesive supply pressure (see Figure 15).

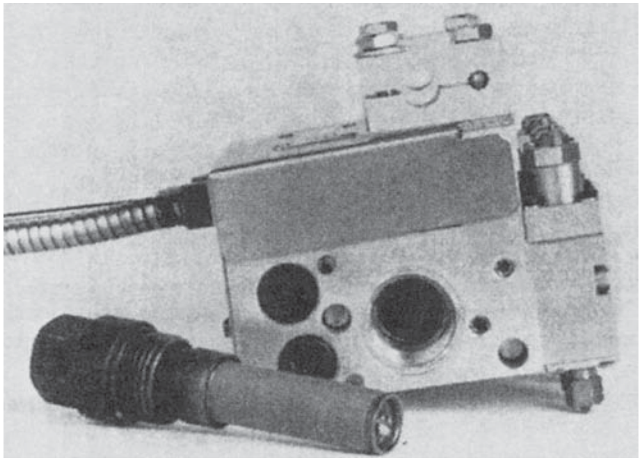

Figure 14. Heat exchanger gun.

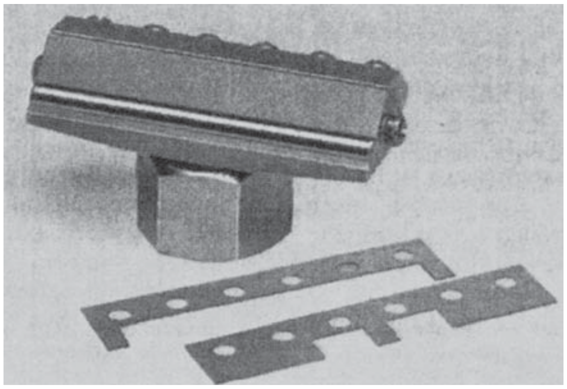

Figure 15. Two-inch slot nozzle with pattern blades.

Web extrusion is well suited to coating applications such as labeling, tape/label, envelopes, business forms, and web lamination as in nonwovens.

For temperature-sensitive adhesives in continuous web extrusion, the slot nozzle is used with a heat-exchanger device to minimize temperature exposure of the material.

Wheel and roll dispensers are the predecessors of present coating extrusion. Wheels or rolls are mounted in a reservoir of molten adhesive. The wheels or rolls are finely machined and may be etched, drilled, or engraved with desired patterns for specific pattern transfer. As the wheel rotates in the reservoir, it picks up the hot melt and transfers it to the moving substrate by direct contact (see Figure 16). The reservoir may be the primary melting unit or fed by an outside melting device.

Roll coaters involve a series of unwinding and rewinding units for paper coating, converting, and laminating, plus wide-web applications for tape and label applications.

Timing and Controlling Devices. Automatic applications require installation of one or more devices to control the placement of adhesives on the moving substrate. Such devices normally include a sensor or trigger to detect the presence of the substrate in the gluing station, and a timer or pattern control to measure the predetermined intervals between beads of adhesive or the substrate and to activate extrusion guns at the proper moments (see Figure 17).

The sensor may be operated mechanically (as with a limit switch activated by the substrate or a cam on the packaging machine) or optically (as with photo eyes or proximity switches).

Timers or pattern controls may be used at constant line speeds to time delay extrusion intervals or produce stitched beads. When the line speed varies, pattern controls equipped with line speed encoder or tachometer must be used to compensate for changes in line speed so that bead lengths remain the same. Such devices are highly reliable but are more complex and correspondingly more expensive than duration controls. They can usually control bead placement accurately at line speeds up to 1000 ft/min (5.1 m/s).

Some pattern controls can also be equipped with devices that electronically vary air pressure to the hot-melt

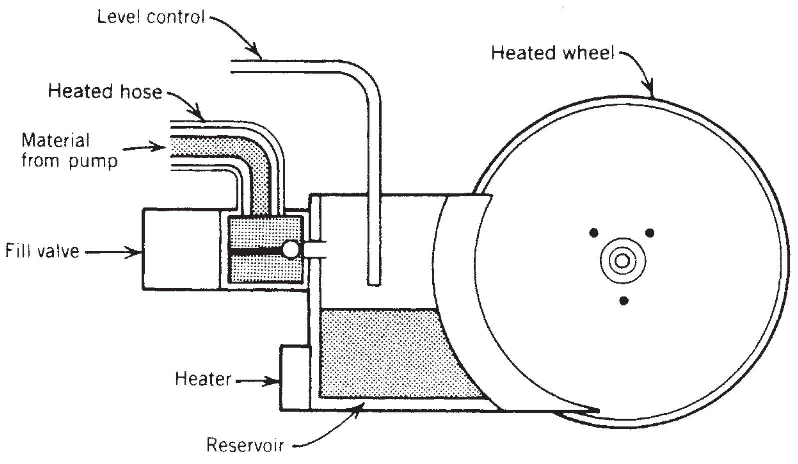

Figure 16. Wheel-type applicator.

applicator to control adhesive output, which maintains constant bead volume as well as placement at varying line speeds. Other accessories can be obtained to count the number of packages that have been glued, check for missing beads, and allow the same device to control guns or different lines. Advanced controls are often modular in construction, user oriented, and include self-diagnostic features.

System Selection. Choosing the correct system to produce the results desired on the packaging line is not difficult once the variables are identified. Some primary variables to consider in specifying equipment for a hot-melt system include rate of consumption, rate of deposition, adhesive registration, and control. Trained factory representatives for adhesive applicating equipment can identify and recommend the best system to fit those variables.

The melting device selected must be capable of handling the pounds-per-hour demand of the packaging operation. The unit must also have sufficient holding capacity to prevent the need for frequent refilling of the adhesive tank or hopper.

Adhesive consumption is affected by line speed, bead size, and pattern. The adhesive consumption rate and maximum instantaneous delivery rate of the pump must be matched to the application requirements (see below).

The pattern to be deposited will determine the dispensing device. Also, the pattern size and registration of the adhesive deposit must be matched with the cycling capabilities of that device.

The system must fit neatly into the entire operation with spacing considerations for mounting unit, gun, and hoses; location to point of application; and accessibility for maintenance.

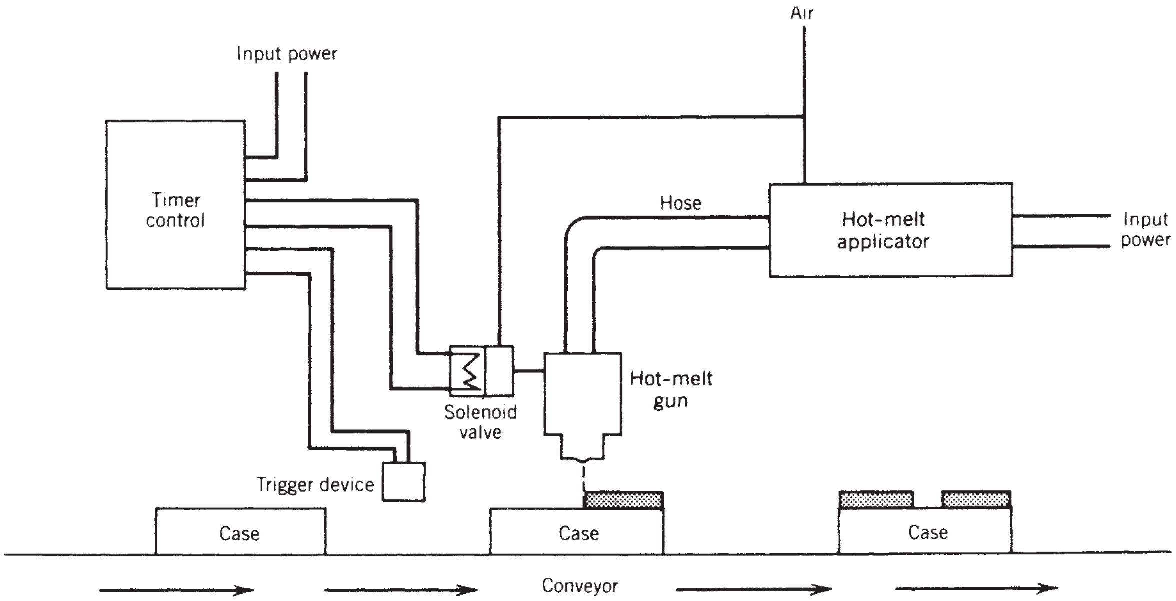

Figure 17. Timer application process. The timer control sequence is activated when the trigger device senses the leading edge of the case. The timing sequence controls preset adjustable delay and duration gun actuations.

CALCULATING MAXIMUM INSTANTANEOUS DELIVERY RATE

The acronym MIDR (maximum instantaneous delivery rate) is used interchangeably with IPDR (instantaneous pump delivery rate). MIDR is the amount of adhesive that a pump would need to supply if its associated guns were fired continuously for a specified period of time. Useful units for measuring MIDR are pounds per hour (lb/h) and grams per minute (g/min).

To calculate the MIDR for a specific application, follow the steps in the example below. Refer to Figure 18 for a visual description of the physical parameters used in the calculation.

Given

1. Four beads per flap, top and bottom sealing, for a total of 16 beads per case.
2. Case length of 16 in. (41 cm).
3. Production rate of 20 cases per min at 100% machine efficiency.
4. Bead length of 4 in. (10 cm), 1 in. (2.5 cm) from case end, with a 6-in. (15-cm) gap between beads.
5. Eight-in. (20-cm) gaps between cases.
6. Adhesive "mileage" of 700 lineal ft · lbf (949 J).

"Mileage" is a function of bead size and the specific gravity of the adhesive. The 700 lineal ft · lbf used above is based on a 3/32-in. (2.4 mm) half-round bead (standard-size packaging bead) and melt density of 0.82 g/cm^3 (melt density of standard packaging adhesive). Adhesives of this type yield approximately 30 in.^{3}/lb (1 cm^3/g).

Calculation

1. Determine the total bead length in in./h (cm/h) and convert to ft/h (m/h).

$$(20\ \text{cases/min}) \times (4\ \text{in./bead}) \times (16\ \text{beads/case})$$

$$\times (60\ \text{min/h}) = 76{,}800\ \text{in./h}\ (195{,}000\ \text{cm/h})$$

$$(76{,}800\ \text{in./h}) \times (1\ \text{ft}/12\ \text{in.}) = 6400\ \text{ft/h}\ (1950\ \text{m/h})$$

2. Determine the adhesive consumption rate at 100% machine efficiency using total bead length per hour and adhesive mileage:

$$(6400\ \text{ft/h}) \times (1\ \text{lb}/700\ \text{ft})(1\ \text{g}/1.54\ \text{m})$$
$$= 9.14\ \text{lb/h}\ (4.15\ \text{kg/h})$$

3. Determine duty cycle using length of bead during machine cycle and machine cycle (length between case leading edges).

$$\frac{\text{8-in. bead length}}{\text{24-in. cycle length}} = 0.333$$

4. Determine the MIDR using the inverse of the duty cycle and the adhesive consumption rate from step 2.

$$\frac{1}{0.333} \times (9.14\ \text{lb/h}) = 27.42\ \text{lb/h}\ (207\ \text{g/min})\ \text{MIDR}$$

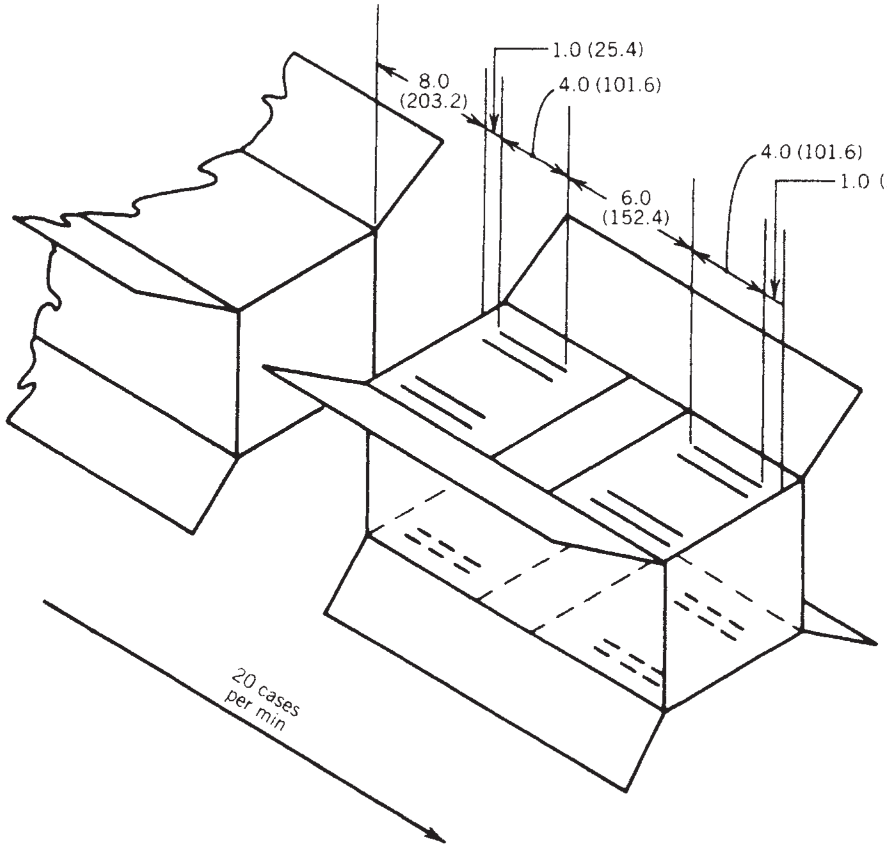

Figure 18. Calculating the MIDR for a specific application. Dimensions are given in inches (millimeters in parentheses).

This example demonstrates the difference between the delivery rate and the adhesive consumption rate. When the guns are firing, the pump is delivering adhesive at a rate of 27.42 lb/h. This is the MIDR. Speed reducers are rated and selected according to the MIDR they can provide. This figure should not be confused with the consumption rate, because the consumption rate is an *average* measure of consumption that includes the time when adhesive demand is zero.

Several equations may prove helpful in some applications:

Bead Length, Line Speed, and Duration

$$\frac{5 \times \text{bead length(in.)(cm)}}{\text{line speed(ft/min)(cm/s)}} = \text{duration(s)}$$

$$\frac{\text{line speed(ft/min)(cm/s)} \times \text{duration(s)}}{5} = \text{bead length(in.)(cm)}$$

$$\frac{\text{bead length(in.)(cm)} \times 5}{\text{duration(s)}} = \text{line speed(ft/min)(cm/s)}$$

BIBLIOGRAPHY

"Adhesive Applicators" in D. H. Shumaker and C. H. Sholl, *The Wiley Encyclopedia of Packaging Technology*, 1st edition, Wiley, New York P&A Division, Nordson Corporation, 1986, pp. 4–14.

General References

G. L. Schneberger, *Adhesives in Manufacturing*, Marcel Dekker, New York, 1983.

"Definitions of Terms Relating to Adhesives and Sealants." *Adhes. Age* (May 31, 1983).

I. Kaye, "Adhesives, Cold, Water-Borne;" T. Quinn, "Adhesives, Hot Melt;" and C. Scholl, "Adhesives Applicating, Hot Melt" in *The Packaging Encyclopedia 1984*, Vol. 29, No. 4, Cahners Publishing, Boston, MA, 1984.

1981 Hot Melt Adhesives and Coatings, Technical Association of the Pulp and Paper Industry, Norcross, GA, 1981 (Short course notes presented at the TAPPI Conference, San Diego, July 1–3, 1981.)

"Calculating Maximum Instantaneous Delivery Rate," *Components Catalog, P&A Division*, Nordson Corporation, Norcross, GA, 1984, p. A2.

ADHESIVES

Irving Kaye
National Starch and Chemical
Company, Murray Hill,
New Jersey

Updated by Staff

INTRODUCTION

The packaging industry represents a significant market for adhesives materials. Some applications include coatings, which act as adhesive layers for bonding to other forms of packaging, such as labels or tapes, or are used in the actual assembly of a carton, or to prepare a laminate.

Adhesives make up more than 80% of the adhesive and sealants market. In 2002, the global market was about 16.7 million tons and was expected to rise about 3–4% per year. In the United States, the market was estimated to be 8.89 million tons in 2004; as a comparison, the market in 1999 was 6.89 million tons (1).

The principal uses of adhesves include: the forming and sealing of corrugated cases and folding cartons; the forming and sealing of bags; the winding of tubes for cores, composite cans, and fiber drums; the labeling of bottles, jars, drums, and cases; the lamination of paper to paper, paperboard, and foil; and the lamination of plastic films for flexible packaging. The markets for packaging materials are diverse, mainly concerned with food, beverage, medical, and heavy-duty industrial applications, each of which can bring stringent performance requirements and impose harsh environments under which the adhesive layer is expected to function.

There is a strong movement to replace solvents and solvent-based adhesives in both the United States and Europe, in order to minimize volatile organic emissions. This has led to a growth in water-based and hot-melt adhesives at the expense of solvented types. Also, there has been a strong interest in recyclable adhesives based on requirements for recycled paper content in the United States and Europe. There is a desire to develop single material packaging to facilitate recycling and minimize sorting. A problem is that adhesive residues left in board can produce difficulties in the subsequent handling of the regenerated material. Under consideration is the use of bioadhesives to assist in the material breakdown (2).

There are many types of packaging adhesives, frequently for the same end-use applications, with the choice dictated by cost, productivity factors, the particular substrates involved, special end-use requirements, and environmental considerations (see also Adhesives, extrudable). To help clarify this complex picture involving many different chemical types, it is useful to classify packaging adhesives into three physical forms: water-based solutions and dispersions, solvent-based systems, and solvent-free 100% solids and hot melts.

WATER-BASED SYSTEMS

This is the oldest—and still, by far, the largest-volume—class of adhesive used in packaging. These adhesives share the general advantages of ease and safety of handling, energy efficiency, low cost, and high strength. Water-based adhesives can be further divided into two categories, natural and synthetic.

Natural Water-Based Adhesives

The earliest packaging adhesives were based on naturally derived materials—indeed, almost all were until the 1940s—and they still constitute a large segment of the market. However, they have seen their gradual replacement in many applications. Starch and dextrin have been replaced by synthetic poly(vinyl acetate) emulsions. However, starch-based adhesives are still being investigated (3).

Starch. The largest class of natural adhesives is based on starch; in the United States, this means corn starch. Some potato starch is used in Europe primarily because of economics, since they are heavily subsidized. Adhesives are produced from raw flour or starch, but more frequently the starch molecule is broken down into smaller chain segments by acid hydrolysis. Depending on the conditions of that reaction, the resulting material can be a fluidity or thin-boiling starch or a dextrin. These can then be further compounded with alkaline tackifiers such as borate salts, sodium silicate, or sodium hydroxide, with added plasticizers or fillers.

A principal use of starch adhesives is in the manufacture of corrugated board for shipping cases. The standard process involves suspending ungelatinized cornstarch in a thin carrier-starch cook as a vehicle. When the bond line is subjected to heat and pressure, the cornstarch gelatinizes almost instantly, forming a bond between the flutes and the linerboard at very high rates of production. Additives are usually used to improve adhesion, lower gel temperature, increase water resistance, and further increase speed of bond formation.

Other important uses of modified starches and dextrins are in the sealing of cases and cartons, winding of spiral or convolute tubes, seaming and forming of bags, and adhering the seams on can labels. Glass bottles are frequently labeled with a special class of alkaline-treated starch adhesive called a “jelly gum.” These have the special tacky, cohesive consistency required on some moderate-speed bottle labeling equipment. Specially modified starches based on genetically bred high-amylose strains are also used as primary ingredients in the remoistening adhesive on gummed tape used for box sealing.

There are many strong points to recommend starch-based adhesives. They are regarded as very easy to handle, clean-machining, easy to clean up, and, above all, inexpensive. Starch has excellent adhesion to paper; and, being nonthermoplastic, it has outstanding heat resistance. Starch also has a green, environmentally friendly image, being “natural” and based on a renewable resource. The negatives are the relatively slow rate of bond formation, the limited adhesion to coatings and plastics, and poor water resistance.

Protein. Another class of natural adhesives is based on animal or plant protein. Proteins are highly susceptible to changes in their structure through changes in pH, the process of denaturation, and breakdown in molecular weight to effect solubilization.

Soybeans. Soybeans are important sources of both proteins and trigylceride oils. Proteins for adhesives are obtained from harvested soybeans by extracting and pressing out the oils and then heating. Soy in combination with blood or casein seems to exhibit the most water resistance. Protein-based adhesives are of interest to the medical industry; however, blood contamination is an issue (1). Considerable work is being done in this area. Stable adhesives from urea-denatured soy flour have been reported (4).

Animal Glue. This is one of the earliest types of adhesive. It is derived from collagen extracted from animal skin and bone by alkaline hydrolysis. When used as a heated colloidal suspension in water, animal glues have an unusual level of hot tack and long, gummy tack range. However, because of fluctuating availability and cost, along with the development of improved synthetics, there are only two significant uses of animal glue in packaging: (*1*) as a preferred ingredient in the remoistening adhesive on reinforced gummed tape use for box sealing and (*2*) as the standard adhesive used in forming rigid setup boxes.

Casein. This is produced by the acidification of skimmed cow’s milk. The precipitated curds thus produced form the basis of casein adhesives. There is a lack of suppliers of casein in the United States. The main sources for casein are Australia, New Zealand, and Poland, but it is also produced in Argentina and the Scandinavian countries.

There are two packaging applications where casein is used in large volume. One is in adhesives for labeling glass bottles, particularly on newer high-speed labelers where they outperform starch-based adhesives. They are especially favored for beer bottles, where casein provides the resistance to cold-water immersion required by brewers, together with removability in alkaline wash when the bottles are returned. The second use is as an ingredient in adhesives used to laminate aluminum foil to paper. Combined with synthetic elastomers such as polychloroprene or styrene-butadiene lattices, casein provides a unique balance of adhesion and heat resistance (5).

Natural Rubber Latex. This is extracted from the rubber tree, *Hevea brasiliensis*, and is available in several variations of concentration and stabilization. One major use in packaging is as a principal ingredient in adhesives for laminating polyethylene film to paper, as in the construction of multiwall bags. Natural rubber latex also finds use in a variety of self-seal applications, since it is the only adhesive system that will form bonds only to itself with pressure. This property is used in self-seal candy wraps (where it is called *cold-seal*) and in press-to-seal cases, as well as on envelopes.

Synthetic Water-Based Adhesives

Synthetic water-based adhesives are the most broadly used class of adhesives in general packaging. Almost all are resin emulsions, specifically poly(vinyl acetate) emulsion, which is a stable suspension of poly(vinyl acetate) particles in water. These systems usually contain water-soluble protective colloids such as poly(vinyl alcohol) or 2-hydroxyethyl cellulose ether and may be further compounded by the addition of plasticizers, fillers, solvents, defoamers, and preservatives.

These emulsions are supplied in liquid form (the ubiquitous “white glue”) in a range of consistencies from thin milky fluids to thick, nonflowing pastes. They are used in a broad range of packaging applications, to form, seal, or label cases, cartons, tubes, bags, and bottles. In most of these uses they have replaced natural adhesives because of their greater versatility. They can be compounded to have a broad range of adhesion not only to paper and glass but also to most plastics and metals. They can be rendered very water-insensitive for immersion resistance, or very water-sensitive to promote ease of cleanup and good machining. They are the fastest-setting class of water-based adhesives, facilitating increased production speeds. They are low in odor, taste, color, and toxicity and have excellent long-term aging stability. They are tough, with an excellent balance of heat and cold resistance. The equipment used to apply them is relatively simple and inexpensive to purchase and to operate. Finally, they are economical and reasonably stable in cost.

The utility of these emulsion systems has broadened in recent years with the greater use of copolymers of vinyl acetate. Copolymerizing vinyl acetate with ethylene or acrylic esters in particular has greatly improved the adhesion capabilities of these emulsions, particularly where adhesion to plastics or high-gloss coatings is required. For example, crosslinking acrylic–vinyl acetate copolymer emulsions have replaced polyurethane solution systems for laminating plastic films for snack packages. The largest areas of use for vinyl emulsions, however, are in case and carton sealing, forming the manufacturers joint on cases and cartons, and the spiral winding of composite cans.

All acrylic emulsion pressure-sensitive adhesives have to a significant degree replaced acrylic or rubber solution products in the manufacture of pressure-sensitive labels. The development of water-based acrylics eliminates a source of solvent vapors. The development of pressure-sensitive adhesives compared to other tapes is convenience of use. There are no storage problems, and no mixing or activation is necessary. No waiting is involved. Often the bond is reversible. Disadvantages are that adhesive strength is low and they are not suitable for rough surfaces.

Polyurethane dispersions have found acceptance in medium-performance flexible packaging applications laminating plastic films together where some chemical resistance is required.

The use of other synthetic water-based systems is quite minor and specialized. Some synthetic rubber dispersions are used in film adhesives and, in conjunction with casein, for the lamination of aluminum foil to paper. There is some use of tackified rubber dispersions as pressure-sensitive masses on tapes and labels replacing solvent-based rubber–resin systems.

Sodium silicate was once widely used in many paper packaging applications, ranging from corrugating to case sealing, but today the primary use of silicate adhesives is in tube winding, especially in the convolute winding of large drums or cores where it produces a high degree of stiffness.

SOLIDS/HOT-MELT ADHESIVES

Hot melts are the fastest-growing important class of adhesives in packaging. Most of their volume goes into high-speed large-volume case and carton sealing. Hot melts can be defined as 100% solids adhesives based on thermoplastic polymers, which are applied heated in the molten state and set to form a bond on cooling and solidification. Their chief attraction is the extremely rapid rate of bond formation, which can translate into high production rates on a packaging line.

The backbone of any hot melt is a thermoplastic polymer. Although almost any thermoplastic can be used, and most have been, the most widely used material by far is the copolymer of ethylene and vinyl acetate (EVA). These copolymers have an excellent balance of molten stability, adhesion, and toughness over a broad temperature range, as well as compatibility with many modifiers. The EVA polymers are further compounded with waxes and tackifying resins to convert them into useful adhesives. The function of the wax is to lower viscosity and control set speed. Paraffin, microcrystalline, and synthetic waxes are used, depending on the required speed, flexibility, and heat resistance. The tackifying resins also function to control viscosity, as well as wetting and adhesion. These are usually low-molecular-weight polymers based on aliphatic or aromatic hydrocarbons, rosins, rosin esters, terpenes, styrene or phenol derivatives, or any of these in combination. The formulations always include stabilizers and antioxidants to prevent premature viscosity change and char or gel formation that could lead to equipment stoppage.

Two variations on traditional EVA hot melts have recently become commercially significant. First, the recent availability of very low-molecular-weight EVA copolymers has made possible EVA hot melt that can be run at much lower temperatures, 250°F (121°C), rather than the traditional 350°F (177°C). This allows for much safer running conditions as well as energy savings. Second, an analog of EVA, ethylene-butyl acrylate, has been introduced as the backbone polymer in some packaging hot melts (6), providing advantages in both adhesion and in heat and cold resistance. Decrease in the application temperature has lessened safety concerns associated with this type of adhesive (1).

Another class of hot melts used in packaging is based on lower-molecular-weight polyethylene, compounded with natural or synthetic polyterpene tackifiers. These lack the broader adhesion capabilities of the EVA-based hot melts as well as their broader temperature resistance capabilities. However, they are economical and are adequate for many paper bonding constructions, and they find application in case sealing and bag seaming and sealing.

A third type of hot melt is based on amorphous-poly α-olefin (APAO) polymers. Originally these were based on amorphous polypropylene, which was widely available as the byproduct of the polymerization of isotactic polypropylene plastics. As a byproduct, it was inexpensive, but it suffered from low strength and was limited to applications such as lamination of paper to paper to produce water-resistant wrapping material on two-ply reinforced shipping tape. Improvements in polypropylene polymerization catalysts have almost eliminated this byproduct, but several producers noted the market and began producing on-purpose APAO polymers, albeit at somewhat higher costs.

Another recent class of hot melt is based on thermoplastic elastomers: block copolymers of styrene and butadiene or isoprene. These find primary application in hot-melt pressure-sensitive adhesives for tapes and labels replacing solvent-borne rubber systems. More recently, their broad adhesion and low temperature and impact resistance are finding use such as (a) the attachment of polyethylene-base cups to polyester soft-drink bottles (7) and (b) the sealing of film laminated frozen-food cartons. Pressure-sensitive adhesives from high-molecular-weight block copolymers having a high diblock copolymer are suitable for PVC film labels and decals (8).

Even more specialized applications use hot melts based on polyamides or polyesters when specific chemical- or heat-resistance requirements have to be met, but their high cost and relatively poor molten stability have precluded their widespread use to date.

The most recent and highest-performance hot-melt technology is moisture curing polyurethane hot melts, but these have been limited to higher-requirement product assembly applications and have found few uses in packaging.

All hot melts share the same basic advantages, based on their mechanism of bond formation by simple cooling and solidification. They are the fastest-setting class of adhesive—indeed, preset before both substrates can be wet is the most frequent cause of poor bonds with hot melts. Because of the wide range of polymers and modifiers used, they can be formulated to adhere to almost any surface. With no solvent or vehicle to remove, they are generally safe and environmentally preferred. They are excellent at gap filling, since a relatively large mass of material can “freeze” in place, thus joining poorly mated surfaces with wide dimensional tolerances.

However, all hot melts share the same weakness, which is the rapid falloff in strength at elevated temperatures. They also have a tendency to damage substrates that cannot withstand their application temperature (1). Properly formulated hot melts can be suitable for almost all packaging applications, but they are not appropriate for very hot-fill or bake-and-serve applications.

SOLVENT-BASED ADHESIVES

Solvent-based adhesives, which are by far the smallest, and most rapidly declining, of the three classes of adhesive used in packaging, find use in specialized applications where water-based or hot-melt systems do not meet the technical requirements.

Rubber–resin solutions are still used as pressure-sensitive adhesives for labels and tapes. However, factors of cost, safety, productivity, and, above all, compliance with clean-air laws have led to a strong movement toward water-based or soilds/hot-melt alternatives. Such alternatives are available to meet most requirements and most knowledgeable observers predict an almost total disappearance of rubber–resin solvent-based pressure sensitives for packaging tapes and labels in the near future.

Solvented polyurethane adhesives are widely used in flexible packaging for the lamination of plastic films. These multilayer film constructions find application in bags, pouches, wraps for snack foods, meat and cheese packs, and boil-in-bag food pouches. They have the ideal properties of adhesion, toughness, flexibility, clarity, and resistance to heat required in this area. However, here, too, alternative systems are being introduced to eliminate the costs, hazards, and regulatory problems associated with solvent-based systems. Crosslinking waterborne acrylic polymers have gained acceptance in the large snack food laminating market for constructions such as potato chip bags. Polyurethane dispersions and (100% solids) “warm melt” systems are starting to find use in some of the more demanding food packaging applications.

Solvent-based ethylene–vinyl acetate systems found use in some heat-seal constructions, such as the thermal strip on form–fill–seal pouches, or on lidding stock for plastic food containers such as creamers or jelly packs.

BIBLIOGRAPHY

I. Kaye, “Adhesives” in *The Wiley Encyclopedia of Packaging,* 2nd edition, John Wiley & Sons, New York, 1997, pp. 23–25.

Cited Publications

1. E. M. Yorkgitis, “Adhesives” in *Kirk–Othmer Encyclopedia of Chemical Technology,* 5th edition, Vol. 1, John Wiley & Sons, Hoboken, NJ, 2004.
2. R. J. Ashley, “Packaging Industry” in D. E. Packham, ed., *Handbook of Adhesion,* 2nd edition, John Wiley & Sons, Chichester, UK, 2005.
3. S. Peltonen and H. Mikkonen, U.S. Patent 7,264,666 (to Valtion tecknillen tutkimuskeskus, Finland), September 4, 2007.
4. J. M. Wescott and M. J. Birkeland, U.S. Patent Application 20080021187, January 24, 2008.
5. W. B. Kinney, U.S. Patent 2,754,240, (to Borden Company), July 10, 1956.
6. F. Brady and T. Kauffman, U.S. Patent 4,816,306 (to National Starch and Chemical Company), March 28, 1989.
7. T. Taylor and P. Puletti, U.S. Patent 4,212,10 (to National Starch and Chemical Company), July 15, 1980.
8. D. J. St. Clair and co-workers, U.S. Patent 7,297,741 (to Kraton Polymrs U.S. LLC), November 20, 2007.

General References

I. Skeist, ed., *Handbook of Adhesives*, 3rd edition, Van Nostrand Reinhold, New York, 1990.

K. Booth, ed., *Industrial Packaging Adhesives*, CRC Press, Boca Raton, FL, 1990.

D. E. Packham, ed., *Handbook of Adhesion*, 2nd edition, John Wiley & Sons, Chichester, UK, 2005.

ADHESIVES, EXTRUDABLE

Stephen R. Tanny
DuPont Polymers,
Wilmington, Delaware

In its broadest definition, extrudable adhesives are polymeric resins that can be processed by standard extrusion processes and are useful for bonding together various substrates. In practice, extrudable adhesives are commonly polyolefin materials useful in processes such as blown and cast film, blow molding, and extrusion coating.

OVERVIEW

The variety of polymeric materials available to both the industrial user and the consumer and are useful as adhesives include several materials almost equal to the number of polymer types themselves (see also Adhesives). Adhesives are developed from such polymers as polyvinyl acetate, polyvinyl alcohol, polyamides, polyesters, and many others. Adhesives can be applied as solvent solutions, aqueous dispersions, pastes, spray coatings, tapes, and thermally activated films. One special subset of adhesives, called *extrudable adhesives*, are different in that, in their application, they are applied in an extrusion process, in which they are melted, conveyed, and inserted between the substrates that are to be bonded together. Although there are many adhesive application methods that require the melting of a polymeric adhesive, extrudable adhesives are distinguished from other adhesive types used in processes such as powder coating, flame spraying, and the thermal lamination of adhesive films and webs. As a second distinction, extrudable adhesives are also distinguished from hot-melt adhesives that generally require a resin viscosity unsuitable for traditional extrusion processes. Thus, extrudable adhesives are those materials specifically designed to function in processes such as coextrusion blown and cast film, monolayer and coextrusion coating and lamination, coextrusion cast sheet, coextrusion blow molding, and coextrusion tubing.

TYPES OF EXTRUDABLE ADHESIVE

Extrudable adhesives are most often polyolefin-based compositions. The most common use of these polyolefin extrudable adhesives is as a specific layer in a multilayer coextrusion. Coextrusion is a technique that allows the creation of a plastic composite, in a single operation, which combines the benefits of a number of different materials. The plastic composite may be, for example, a packaging film that combines the properties of an oxygen-barrier resin with a heat-sealable layer on one side and an abuse-resistant layer on the other side. The purpose of the extrudable adhesive is to bond the diverse plastic materials in the construction that would not, under ordinary circumstances, bond with each other. The polyolefin adhesive is designed to bond with similar polyolefins by a diffusion process. That is, during the extrusion process, the molten extrudable adhesive resin comes in contact with the molten polyolefin. Their molecules diffuse together creating a strong bond between the materials (1). The polyolefin extrudable adhesive is designed to bond with other polymeric materials, such as oxygen-barrier resins like polyamides and ethylene vinyl alcohol, through a chemical reaction between a functional group on the adhesive and a functional group on the barrier resin. Often, the functional group on the extrudable adhesive can be chosen for bonding to specific materials of interest.

Many types of extrudable adhesive exist. Polyethylene can be considered to be an extrudable adhesive. Commonly, polyethylene is used in extrusion lamination of paper to aluminum foil. The polyethylene is extruded at very high temperatures. The melt is oxidized by contact with air creating polar functionality on the surface of the melt. This process provides chemical bonding to the aluminum oxide on the surface of the foil (2). The low viscosity of the melt and its polar nature allows for good wetting on the paper and for encapsulation of the individual fibers. Co-polymers of ethylene and vinyl acetate also are useful extrudable adhesives and capable of bonding polyethylene to polyvinyl chloride. However, the most sophisticated extrudable adhesives are polyolefins with either acid or anhydride functionality. Acids and anhydrides are particularly reactive and can create strong bonds to several different materials in extrusion processes. Examples of acid-modified polyolefins are the copolymers of ethylene with acrylic acid or methacrylic acid. Variations include the partially neutralized acid co-polymers with metal ions referred to as ionomers or terpolymers of ethylene, an acid and an acrylate such as methyl acrylate or isobutyl acrylate. Acid-containing extrudable adhesives are widely used to bond with aluminum foil (3, 4). Examples of anhydride modified polyolefins include terpolymers of ethylene, maleic anhydride, and acrylates such as ethyl acrylate or butyl acrylate and the anhydride grafted polyolefins.

The anhydride grafted polyolefins are created by combining the polyolefin with an anhydride, most commonly maleic anhydride. The anhydride is added to the polyolefin with a free-radical initiator in a solvent or the melt. This addition allows for the attachment of the highly reactive anhydride to polyolefins, such as high-density polyethylene, linear low-density polyethylene, polypropylene, ethylene vinyl acetate copolymers, or ethylene propylene rubbers. Although the polar functionality of the anhydride and the polyolefin backbone are the necessary ingredients for the extrudable adhesive to function, almost all commercially available extrudable adhesives are formulated with other polymers. Formulations of anhydride modified extrudable adhesives will generally contain two or three basic components. Two-component extrudable adhesives will contain the anhydride graft blended into a second, or matrix polyolefin (5). The purpose of the second polyolefin is to lower the overall cost of the adhesive and to control the viscosity, modulus, tensile, thermal, and other properties of the adhesive. The three-component formulation will contain the anhydride graft, the matrix polyolefin, and a modifier (6). The purpose of the modifier is to enhance the peel strength characteristics of the bonded composite. In most cases, the efficiency of the extrudable adhesive is judged by peeling the bonded composite apart in a “T” peel mode. The modifier affects the peel strength characteristics of the adhesive by dissipating the force at the interface where the composite is being peeled apart. The result of this process is the necessity for more work to peel apart the bonded composite (7). These extrudable adhesives also can have other additives, such as antioxidants, slip agents, or resin tackifiers.

Although the formulation of an extrudable adhesive is very important to its utility, many other factors also affect how well an extrudable adhesive will bond different materials together. How the extrudable adhesive is processed, its thickness, and whether the bonded composite is oriented, shaped, or exposed to aggressive environmental conditions can affect the performance of the adhesive (8, 9).

COMMERCIAL OFFERINGS

Many producers of extrudable adhesives around the world exist. Some of these producers will produce only a few types of extrudable adhesive. Others have a broader product line. Some manufacturers market their adhesives internationally; others only market regionally, to specific market areas, or for use in specific applications. Manufacturers of acid copolymers include Dow Chemical Company as Primacor and E. I. DuPont de Nemours as Nucrel. DuPont also manufactures acid terpolymers. Ethylene terpolymers of anhydride with acrylate are produced by Atochem under the name Lotader. DuPont manufactures extrudable adhesives based on anhydride graft technology under the name Bynel. Quantum Chemical Company also makes and sells extrudable adhesives under the name Plexar. Other manufacturers include Mitsui Petrochemical Company with Admer, Morton International with Tymor, Atochem with Orevac, and DSM with Yparex.

EXTRUDABLE ADHESIVE APPLICATIONS

Extrudable adhesives are used primarily in coextrusion processes (see Coextrusion). The major market area is food packaging. Examples include the coextrusion coating of an oxygen-barrier material, extrudable adhesive, and polyolefin onto paperboard to create high-barrier, nonscalping fruit juice cartons. Oxygen barriers, extrudable adhesives, and ionomers are coextruded by either cast-film or blown-film processes to produce packaging films for hot dogs, bacon, and other processed meats. A third example is the coextrusion blow molding of polyolefin, extrudable adhesive, and oxygen barrier to produce high-barrier ketchup bottles. Extrudable adhesives also are used in applications that do not involve the packaging of foods. Extrudable adhesives are used to bond high-density polyethylene to ethylene vinyl alcohol in a coextrusion blow-molding process to produce automotive gas tanks (see Blow molding). Extrudable adhesives also are used to bond cross-linked polyethylene to ethylene vinyl alcohol through a coextrusion crosshead tubing process to make radiant hot-water heating pipes.

The selection of the proper extrudable adhesive for any particular application may be a complex problem. The first consideration is always the materials that need to be bonded together. The adhesive must be able to bond with these materials. When bonding a polyolefin with an oxygen barrier, such as ethylene vinyl alcohol or polyamide, extrudable adhesives with anhydride functionality are usually the adhesive of choice. The type of anhydride modified polyolefin will depend on the polyolefin being co-extruded with the barrier. For example, if polyamide is being co-extruded with polyethylene, an anhydride-modified polyethylene or anhydride modified ethylene vinyl acetate will be the resin best able to perform in the application. If polypropylene is coextruded with polyamide, then an anhydride modified polypropylene will be chosen. Second, the adhesive must be processable in the equipment that the converter intends to use. This may mean choosing a resin with a relatively lower viscosity for coating applications and a relatively higher viscosity for blow-molding applications. If the bonded composite is going to see a specific environment, such as oil or grease, then it should be resistant to that product. If the composite will be exposed to either very high or very low temperatures, then the adhesive must be functional at those temperatures. Finally, some extrudable adhesive resins may have to have a specific regulatory compliance depending on the application for the bonded composite. Most manufacturers of these extrudable adhesives are prepared to help the converter select the best adhesive for their application.

REFERENCES

1. L. Lee, *Fundamentals of Adhesion*, Plenum Press, New York, 1992.
2. A. Stralin and T. Hjertberg, *J. Adhes. Sci. Technol.* **7**, 1211–1229 (1993).
3. M. Finlayson and B. Shah, “The Influence of Surface Acidity and Basicity on Adhesion of (Ethylene-*co*-acrylic acid) to Aluminum” in *Acid–Base Interactions: Relevance to Adhesion Science and Technology*, VSP BV, Utrecht, 1991, pp. 303–311.
4. G. Hoh, S. Sadik, and J. Gates, “1989 Polymers” in *Proc. Laminations and Coatings Conf.*, 1989, Tappi, Atlanta, GA, pp. 361–366.
5. U.S. Patent 4,230,830 (Oct. 28, 1980), S. Tanny and P. Blatz (to DuPont).
6. U.S. Patent 4,198,327 (April 15, 1980), H. Matsumoto and H. Niimi (to Mitsui Petrochemical Industries, Ltd.).
7. S. Wu, *Polymer Interface and Adhesion*, Marcel Dekker, New York, 1982.
8. B. Morris, *Tappi J.* **75**, 107–110 (1992).
9. B. Morris, *Eng. Plast.* **6,** 96–107 (1993).

AEROSOL CONTAINERS

MONTFORT JOHNSEN
Montfort A. Johnsen &
Associates, Ltd., Danville,
Illinois

The first aerosol cans were heavy steel “bombs,” consisting of two shells about 0.090 in. (2.3 mm) thick, brazed together at the lateral centerline. They were known at least since the early work of Eric A. Rotheim (Oslo, Norway,

1931) and gained fame during 1943–1945 as insecticides for U.S. troops fighting in such places as Guadalcanal and other South Pacific areas. After the war, these products were made available to the public, but acceptance was very poor, due to the high initial expense and the aspect of having to return the emptied unit for refilling. It was obvious that a lightweight, disposable can was needed.

In 1946–1947, Harry E. Peterson developed such a can in the laboratories of the Continental Can Corporation in Chicago. It consisted of a 2.68-in.-diameter solder side seamed can body, to which were seamed a pair of concave end sections. The top section, assembled to the body by the canmaker, carried a small valve, soldered at the centerline. The can was designed to be filled upside-down with highly refrigerated (-45°F or -43°C) aerosol concentrates and propellants, after which the end was double-seamed to the body. The final unit stood 4.8 in. tall and had a capacity of about 12.2 fluid oz (361 mL). In an almost concurrent but independent development, Earl Graham of Crown Cork & Seal Company developed a higher-strength modification of the "Crowntainer" beer can. This was a two-piece container. The base was double-seamed onto a drawn steel shell that contained a soldered valve. The early valves were manufactured by Bridgeport Brass Company, Continental Can Corporation, and many other firms. Most were outrageously costly and inefficient. Slightly later, pioneers such as Robert Alplanalp (Precision Valve Corp.) and Edward Green, Sr. (Newman-Green, Inc.) patented more efficient types.

A major innovation occurred about 1951, when Crown Cork & Seal Company engineers developed the "1-in." ("25.4-mm") hole, along with a corresponding valve cup. The cup could carry the valve components within the central pedestal (except for actuator and dip tube), and it could be crimped (swaged) onto the curl or bead that surrounded the "one-inch" ("1-in.") hole. This secondary plug-type closure rather quickly displaced the soldered valve units, the last of which were filled during October 1953. The Continental Can Company developed a can dome—called a "cone" in the United Kingdom—to provide the needed "1-in." hole, while at the same time enlarging their can somewhat and making it taller.

The budding aerosol industry had to make do with these two nominal 12-oz cans until 1953, when the 2.12-in.-diameter can size was developed as a nominal 6-oz container.

At the insistance of a fast-growing industry, the two can companies introduced some additional can heights. They were joined in 1955 by the American Can Company, who entered the market with their "Regency" line of 2.47-in.-diameter cans in four heights. The National Can Corporation followed soon afterward.

The impact extrusion technology for drawing aluminum beer and beverage cans was well developed by the 1950s. The Peerless Tube Company produced aerosol units as early as 1952 and perhaps even earlier. The American Can Company made a unique two-piece aluminum can (Mira-Spray and Mira-Flo) in just two 6-oz sizes. Other very early entrants were Victor Tube, White Metal, and Hunter-Douglas Corporation (see also Cans, aluminum; Cans, fabrication).

Glass aerosols were made, first by the Wheaton Glass Company (Mays Landing, NJ) about 1953 and then by Ball Brothers and several other firms. The valve was incorporated into a ferrule by Risdon Manufacturing Corporation, Emson Research, Inc., and Precision Valve Corporation, and the ferrule was sealed to the glass finish by means of clinching—a method then also used to seal metal caps on beer bottles.

During 1954, Wheaton developed a method for encasing their bottles in a heavy skin of PVC. The plastic envelope helped the bottle withstand minor falls to hard surfaces, but if breakage should occur, it contained the glass shards and kept them from flying outward and possibly injuring persons nearby. Later on, a bonded film was developed and made an unofficial industry standard on glass bottles of >1-oz (30-mL) capacity.

The packaging process also underwent dramatic changes. Several equipment suppliers are now specialized in the manufacture of aerosol filling and packaging equipment. As aerosol volume grew, higher speed lines were needed. Even double-indexing, two-lane-in-line equipment could not produce more than 125 cans/minute. Reengineering resulted in a production rate of 216 cans/minute. This rate was important to contract fillers because it related directly to competitivety and profitability. Today, very complex rotary machines are available with rated capacities of 480 cans/minute.

In recent history, the aerosol industry has had to contend with many obstacles: the ban on the popular CFC propellants, the global warming potential of various propellants, and, in 2007, legislation that curtails the use of volatile organic chemicals (see Propellants, aerosol).

CAN-MAKING TECHNOLOGY

Tinplate

The three-piece tinplate can still command about 82% of the U.S. aerosol market. This translates to 3.65×109 cans in 2006.

Tinplate, in a number of thicknesses of steel and tin, is routinely delivered to the can-making plant in the form of large rolls typically 39.4 in. (1 m) wide and 48 in. (1.22 m) in diameter. A roll may weigh 15,000 lb (6800 kg) and contain about 4.5 mi (7.25 km) of tinplate, depending on the thickness. After sending the roll through a straightener, a slitter cuts it into sheets best suited for making can bodies with a minimum of waste. At the same time, a scroll cutter produces strips from which dome and base section circles can be cut—again with a minimum of waste (see also Cans, steel).

The body sheets are first lined with epoxy–phenolics or other materials, baked in huge ovens, and then lithographed. At this point the individual can bodies are cut apart. A bare metal fringe is allocated for the area to be welded. The WIMA or other type of bodymaker acts to roll up the can body and tackweld it every inch or two to hold it in place with just the right lapover. After this the welding process produces either a "standard" or "full" (tin-free) weld line. Weld nuggets ($\sim 31\,\text{in.}^{-1}$) form the basic structure. While still extremely hot, the overlap thickness is reduced by heavy compression to only ~1.4 times the average plate thickness. The cylindrical can body is then flanged top and bottom for a "standard" or straight-wall can, or is both necked-in and flanged for the "necked-in" containers. The latter have several advantages and are increasingly popular.

Meanwhile, can domes and bases are being formed in multistage presses. They either are used directly or are "sleeved" into long paper tubes for later fabrication. Quite often, one large plant will make sleeve packs of can ends, for shipment to satellite locations where the assembly process is undertaken. The same is true for can bodies, which can be easily shipped in the flat to other facilities.

The final can is assembled using double seamers that typically operate at about 350 cans/minute. As a rule, the finished cans are then tested using a large wheel-like device that pumps a significant air pressure into each one and then checks for pressure leakage, if any. Such cans are automatically shunted aside and scrapped. Finally, the cans are tiered onto pallets of about 40-in. × 44-in. size, strapped, plastic shrink-wrapped, and warehoused for delivery to fillers.

A recent innovation in tinplate can manufacturing is simply known as shaping. It was developed in the 1970s. The process consists of placing a cylindrical can in a metal mold and then pressurizing it with about 1160 psig (80 bars) of nitrogen (or purified compressed air) to create a can with the shape of the mold. This process remained dormant for 20 years, to some extent because the process was expensive. The method has been improved upon and is now commercialized. Today a relatively large number of aerosol cans are shaped, especially those made of aluminum. One reason for shaping relates to the increasing duplication of U.S. product labels by firms in foreign countries. The use of shaped cans has corrected the problem for now since forgien can-makers do not have the technology. As an example, the WD-40 Company has collected 380 cans of foreign-made specialty lubricants, many of which have patterned their labels and product claims on WD-40 aerosols, They have now changed to shaped cans.

Another innovation dating back to the 1970s involves the development of a compartmentalized tinplate aerosol. The initial product consisted of a 52-mm × 149-mm aerosol can into which a fluted collapsible polyethylene bag was inserted before the base section was attached. The tubular chimney of the bag protruded through the nominal 1-in. can opening and then it was gently heated and flared around the can bead. The aeosol filler poured the concentrate into the bag, almost filling it but leaving a little space for the insertion of the valve. After the valve was crimped into place, isobutane was added through the bottom hole and into the space between the can and the bag. With the isobutane exerting a constant squeezing pressure in the bag of the concentrate, the product would be dispensed when the valve was actuated regardless of the can position. In this fashion the dispenser could extrude such products as honey, jellies, ointments, and so on. This process was expensive and languished until S. C. Johnson & Sons, Inc. developed a unique gelled shave cream concentrate that contained 2–3% of a weak propellent blend. When the mixture was dispensed into the hand and touched with the fingertips, the consumers had the pleasing experience of generating their own foam. The company patented their invention and marketed it under the "Edge" brand. By 2006, the compartmentalized shave creams captured over 62% of the market despite their higher price.

Aluminum

Aluminum cans, which constituted about a 18% of the U.S. market in 2006 (and growing), are made quite differently. Pure (99.70%) aluminum slugs or pucks are lubricated with zinc stearate in a tumbler and are then conveyed to an extruder, where they are formed into a "cup." The cup may be drawn and ironed (draw–ironed), in some advanced operations, to obtain a more uniform wall thickness and lighter structure. After trimming and vigorous cleaning, the lining and exterior decoration coatings are applied. The top is then formed in a number of stages (the number increasing with can diameter) and finally convoluted into either an outside or inside curl configuration. The outside curl is more common. Both have different advantages. Curl machining is sometimes done to smooth the curl surface of larger-diameter cans. Finally, they are strapped into typically 96-pack hexagon shapes and loaded onto 40-in. × 44-in. wood pallets. After strapping and shrink-wrapping, they are ready for delivery. Table 1 gives some details on aluminum aerosol cans.

Table 1. General Information on Aluminum Aerosol Cans

- Most common diameters: 22, 25,35, 38, 45,50, 55, 59, and 66 mm.
- Largest size is 66 × 235 mm. Overflow capacity is 709 mL. (Typical use: Saline rinsing solution—sterile.)
- The 22- and 35-mm cans require valves with 20-mm-diameter ferrules.
- Since aluminum cans are nonmagnetic, most production lines have "puckers" and "de-puckers." The pucks must be ordered for each can diameter.
- Aluminum cans of 45- to 66-mm diameters must use valve with "lathe-cut" rubber cup gaskets, generally Buna-N. (With over 10% DME, use butyl or cholorbutyl.)
- The 38 × 97 mm is (more or less) standard for laboratory samples. (Fills can be 2 oz.)
- Tare weights in a lot of aluminum cans are quite constant as compared to tinplate or steel.
- Aluminum can corrosion can create hydrogen, but very rarely. This overpressurizes the can.
- The passivity range for aluminum is about pH = 4.3 to 8.2 (25°C).

Other

Very small numbers of cans are made by other methods. The Sexton Can Company produces one-piece steel cans by an extrusion process. For larger diameters, they extrude a steel shell, and then double-seam a can bottom to it. The company is able to make very strong cans by this process, able to withstand pressures up to 650 psig (lb/in.^{2} gauge) (45 bars). They are used to pack such higher-pressure products as HCFC-22 refrigerant, which generates 302 psig at 130°F (21 bars at 54.4°C). A special permit from the U.S. DOT (Department of Transportation) is required for such high pressures. As part of the development process, Sexton learned how to produce these cans with a bottom indentation, able to open at about 425 psig (30 bars) and thus long before heating could cause bursting. The orifice lets the product come out with a fair degree of control; otherwise, the dispenser might eventually burst with the brissance and concussive effects of a grenade.

TINPLATE OPTIONS

The electrotinplated steel sheet stock from the tin mill is available in a modest variety of plate thicknesses and tin coating weights. The steel for aerosol cans will typically be ~0.007–0.015 in. (0.18–0.38 mm) thick, according to intended use. The thinnest plate is used for bodies of small (45 to 52-mm)-diameter cans. The bodies of larger cans (57–76 mm in diameter) will typically be made from 75 to 85-lb ETP, which is a can-making term for stock of ~0.0083–0.0094 in. (0.21–0.24 mm) thick. Tops and bottoms require still heavier plate, to prevent premature buckling (eversion) and subsequent unwrapping of the top or bottom double seam, leading to a burst event. End sections of the smaller cans typically use 112-lb ETP, or plate that is 0.0123 in. (0.31 mm) thick. The largest-diameter aerosol can is a nominal 3.00-in. (76-mm) size and requires 135-lb ETP, or 0.015-in. (0.38-mm)-thick plate. Valve cups are almost always made of 95-lb ETP [e.g., 0.0105-in. (0.266-mm) plate].

Since aluminum is notably softer and more deformable than steel, these cans are extruded to have thicker metal. The thickness must be increased as diameters are made larger. The thinnest part of a typical 52-mm-diameter aluminum aerosol can will be about 25% up on the body wall, measuring about 0.017 in. (0.43 mm). The base of the largest aluminum can (66 mm) may easily get to 0.080 in. (2.0 mm). Aluminum valve cups average 0.016 in. (0.41 mm) thick.

In the past, tinplate could be ordered with very heavy tin coatings: up to 1.35 lb of total tin weight per basis box area of 31,360 in.^{2} on each side. This is equivalent to a tin coating of 15.1 g/m^2 on each side. But today, with economic considerations forcing lower inventories, plus improvements in the tinplating process, it is rare to see tinplate of greater than 0.50 lb—that is, 5.6 g/m^2 per side. Some tinplates are made with the so-called “kiss of tin” (0.05-lb ETP) having a nominal coating weight of only 0.56 g/m^2 per side. The thickness then averages only 0.00000303 in. (0.077 μm) per side. The dark gray color of the steel and $FeSn_2$ alloy layer can be easily seen through this ultrathin coating.

With electrotinplating methods it has been possible to obtain differentially coated tinplates; that is, plate having coatings of different thickness on each side. For example, D50/25-lb ETP (more accurately noted as D0.50/0.25-lb ETP) will carry 0.25 lb of tin on one face and 0.125 lb of tin on the other (5.6 + 2.8 g/m^2). This type of plate is generally used with the heavier tin-coated area turned toward the aerosol product, to provide corrosion protection.

Linings

Over half of all tinplate aerosol cans and virtually 100% of all aluminum cans have organic linings. Single linings are the most common, but double linings and (for a few tinplate can bodies) even triple linings can be ordered. A variety of lining materials are used. The most common are the epoxyphenolics, used for about 70% of tinplate cans and around 78% of aluminum cans. Other options include the vinyl organosols, polyamideimide (PAM), and now the polyimideimide (PIM). The PAM and PIM coatings are relatively costly and often more difficult to apply, especially on tinplate. They are extremely resistant to permeation. Finally, there are the pigmented epoxyphenolics and the vinyls. The latter do not adhere well to metal substrates, and are used as a second or top coating, when extra performance is needed. They are unaffected by water, but quickly dissolved by methylene chloride, oxygenated solvents, and certain other solvents.

Corrosion inhibitors should be considered whenever aqueous solutions or dispersions are packed in tinplate. Typical inhibitors include sodium nitrite, sodium benzoate, and various amines.

Can decorations are a very valuable sales tool. They must always be the correct color and not affected by body contouring, consumer use or product spillages. The lining is often critical as a means of assuring product purity and dispenser shelf life. Table 2 gives data on the surface coatings (or linings) process for aluminum aerosol cans.

Size

The can-making industry has strived for uniform dimensions of cans, both from different plants of a given supplier and between suppliers. This acts to save fillers from making time-consuming adjustments to crimping and gassing machines when moving from one lot of cans to the next. The CSMA (Aerosol Division) Commercial Standards Committee has now developed about 13 key dimensions and their tolerances for tinplate cans—both standard and necked-in—and about 10 more for aluminum cans (see Figures 1 and 2).

The smallest tinplate can is 112 × 214 (45 × 72 mm) size, holding 101 mL. Aluminum aerosol cans are known in sizes down to 13 × 26 mm and posibly smaller. The 13-mm size is used for such products as metered dose inhalants (MDIs), breath fresheners, and pepper sprays (which attach to key chains). These tiny aerosols require a 13-mm ferrule-type aerosol valve.

The terminolgy used to designate tinplate can sizes is never used for aluminum aerosol cans, which are always described in the metric system. For tinplate, the

Table 2. Surface Coatings (or Linings) for Aluminum Aerosol Cans

Exterior coatings are applied by offset printing.

The Base Coat	• Selected for adherence to the metal, absence of crazing, radia fracturing, and blistering during the oven-curing process. • Appearance aspects: ○ High-opacity white or colored enamel. ○ Clear or clear-tinted lacquer. ○ Pearlized lacquer. ○ Metallic lacquer. • Selected for a relatively low curing temperature.
The Decorative Coat	• May be applied, up to 7 or 8 colors, in a single operation. • Special effects include: ○ Half tones. ○ Color gradation. • Transparent lacquers, often showing brushed metal.
The Exterior Coat	• Hard, protective varnish, usually glossy but sometimes matte.

Interior linings are applied by three-stage spraying of the “cup,” before die-forming the can dome and curl.

- Epon-phenolic are the most common.
- Organosols (as “Microflex”) are preferred for mousse.
- P.A.M. (polyimideamides) are very resistant.

long-established practice of describing cans in English measurements is now more or less unique to North America, but it is well understood in Western Europe. For instance, 112 signifies 1 and 12/16 in. in diameter, while 214 indicates 2 and 14/16 in. for the height from the base of the bottom double seam to the top of the top double seam. For tinplate (or steel) cans not having a top double seam, the height measurement is the total height to the top of the can curl.

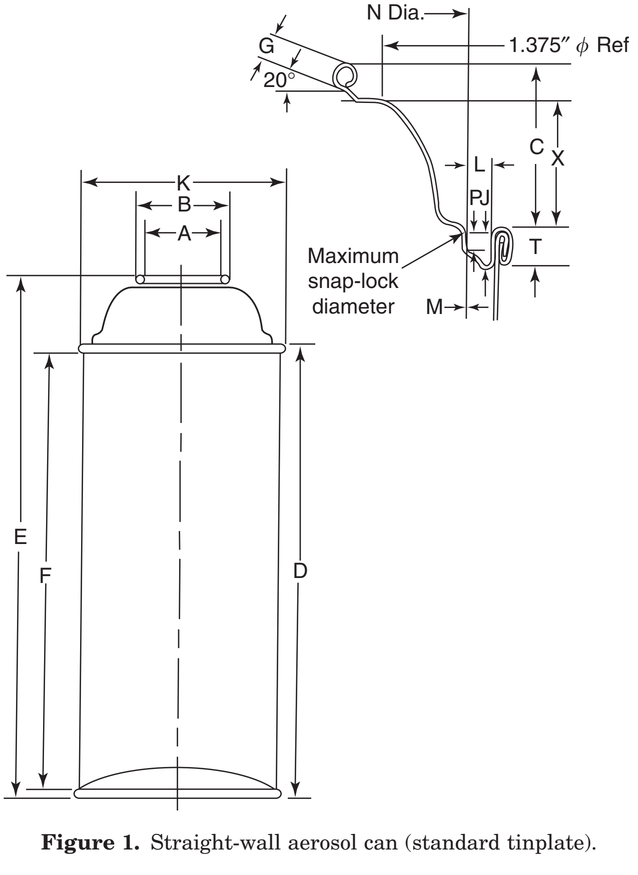

Figure 1. Straight-wall aerosol can (standard tinplate).

Well-known examples of can dimensions are *A*, which is 1.000 ± 0.004 in. (25.4 ± 0.1 mm) for all can sizes and metals, and *B*, which is 1.232 ± 0.010 in. (31.3 ± 0.25 mm) for tinplate cans of all sizes. These particular dimensions are quite critical because the valve cup must fit rather perfectly into the “1-in.” can opening to avoid jamming or scraping and to allow a good hermetic seal when crimped. The outer wall diameter of the valve cup is ~0.992 ± 0.003 in. (25.2 ± 0.08 mm), and this leaves a contingency clearance of only 0.001 in. (0.025 mm) between the largest cup and the smallest hole. This is important not only for fit, but to anticipate traces of out-of-round, metal dimpling and other factors. The *B* dimension is important in making the top rim and shirt of the standard valve cup fit snugly to the can bead, increasing the statistical probability of a good seal. See the article “Pressure containers” for more information.

Seams

The tinplate can has three seams, which can occasionally become matters of concern. Aside from aesthetics, if can leakage occurs, it will often be at the side seam and will more rarely be at the top or bottom double seams. The side seam is also a favored site for can corrosion, due to exposed iron and the relatively poor coverage of side-seam enamel stripes, if applied. The dimensions of the top and bottom double seams are about the same, for a given can diameter. Small-diameter side seamed cans (35, 38, and most importantly 45 mm) have smaller-size double seams than the larger cans. In fact, the 35- and 38-mm

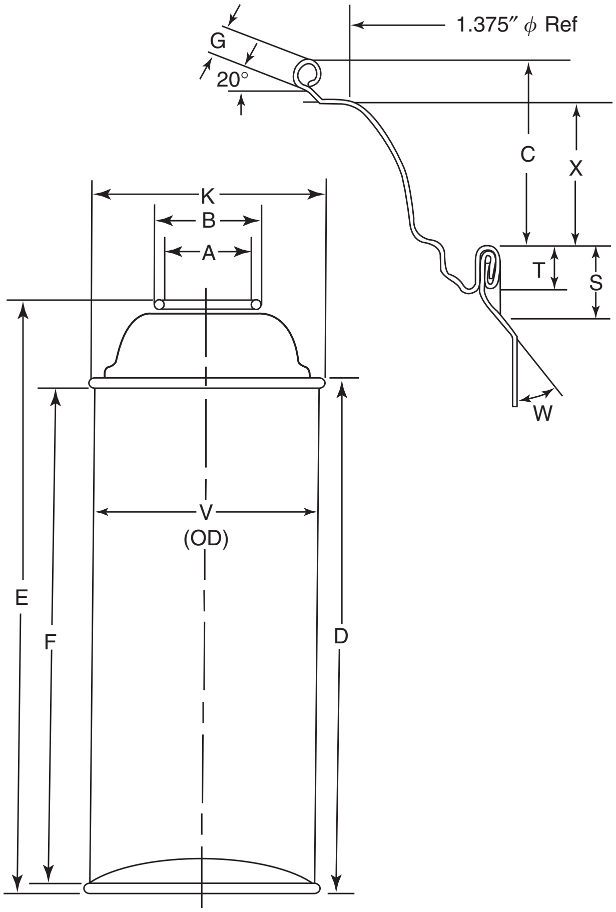

Figure 2. Necked-in aerosol can (tinplate).

cans actually have no top double seam; the metal (side seam and all) is smoothly formed into the "inch–inch" curl. Figure 3 can be used to illustrate the general shape and important elements of a typical side seam. In general, these seams are about 0.125 in. (3.2 mm) high, from sealing wall radius to end hook radius, if the can is 52 mm or larger in diameter.

Description

The United States and Canada use a "sales description" method for indicating can overall dimensions that is based on the English (inch) measurement system. England is changing over to the metric system to conform to the ISO descriptions used in the rest of Europe and generally throughout the rest of the world. Australia and Canada have taken steps in the same direction.

The U.S. "can description" system can be best described by illustrations. The 202 can is one with a body diameter of $2\frac{2}{16}$ in., or 2.125 in. The ISO diameter (actually the inside diameter of the body) would be 52 mm.The U.S. can height is dimension *D* (see Figure 1 or 2), measured as total body height over the two seams. A 612 can would then have a body height of $6\frac{4}{16}$ in., or 6.250 mm. The system extends to such descriptions as 211×1208 and 207.5×605. Seeds of change are being sown in the United States by the United Nations and other international groups, but the system is deeply ingrained and is likely to persist.

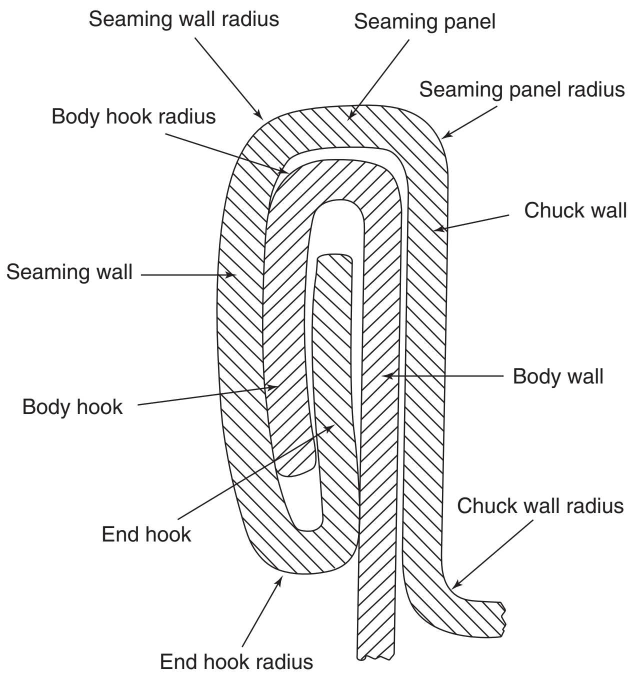

Figure 3. Anatomy of a double seam.

CAN-MAKING TRENDS

The three-piece aerosol can is highly serviceable and is produced by the daily use of heavy equipment valued in the multi-billion-dollar range. There are no massive changes predicted during the next decade. The aerosol dispenser has been accused of having about the same cylindrical shape it had over 40 years ago. Minor improvements—such as necking-in, welding side seams, plastic labeling (to cover the side seam scar), and the "ecogorge" indentation on some aluminum cans, for the attachment of full-diameter caps—have been relatively unnoticed by consumers. To them the aerosol is a cylindrical package, although sometimes with a variously convoluted top portion.

The cylindrical image is an architectural necessity for a pressure-resistant dispenser (see also Pressure containers). Even though glass aerosols had somewhat wider limits, the underlying shape limitations have been a factor in having nearly all the perfume and cologne business transfer to nonpressurized glass pump sprayers and other containers. However, some advances have been offered recently, in the metal can area.

In the United Kingdom the Wantage Research Center of CarnaudMetalBox, plc (a firm now being purchased by Crown Cork & Seal Co.) engineers have developed a process by which a finished (plain or lithographed) three-piece tinplate can is placed momentarily in a heavy steel mold cell and expanded against the contoured sidewalls of the cavity by pressurization with some 1200 psig (83 bars) of filtered dry air. The volume increase is limited to about 12–18%, depending on relative can length. The emerging cans

Table 3. DC Containers: Steel Aerosol Cans

- The sole U.S. supplier is DC Containers, Batavia, IL.
- They currently produce two sizes: 211 × 604 and 211 × 713. DC Containers will make 52-mm cans in 2008. All cans are "DOT-2Q." List prices are about \$0.26 to \$0.29. Cans are "two-piece," with rounded domes and bottoms necked in double seams.
- Using Corus Research technology (from Europe, but perfected in Japan), all inside and outside surfaces of tin-free steel are laminated with:
  - Chrome/chrome oxide (Cr/CrO_x) optimized for PET.
  - Adhesive.
  - Main layer of PET. ''Protact''
  - Top layer of PET. ''Protact''
- The total thickness, on each side, is about 0.020 in. (0.5 mm). WACO testing shows 0-mA conductance—inside to outside. All cans are automatically pressure-tested to 120 psig.
- The main PET layer can be colorized, but printing is done on an eight-color offset machine on the top layer, then baked. The top layer also provides gloss and abrasion resistance.
- For comparison, the lining of tinplate and aluminum cans is typically 0.0004 in. (0.01 mm or 10 μm), or 2% as thick.
- WACO readings on aluminum cans are typically 2–20 mA, while those on lined tinplate cans are typically 300–800 mA.
- Pure dimethyl ether (DME) greatly softens PET, but solution of up to 38% DME (as in some 55% VOC hair sprays) are said to have no effect.

are necked-in and may have pleated, quilted, crestlike, ergonomic finger depressions or other debossings in the body wall. In general, these are never more than ~0.15 in. (3.8 mm) deep. Round-the-can lateral depressions must not be too sharply defined, or the can will increase in height when pressure-tested during later can-making checks or in filler hot tanking. The fact that this is presently an extra cost operation has thus far prevented marketer acceptance, but one is mindful that such innovations as welded seams and necked-in profiles were well-engineered decades before marketers paid them much attention.

The trend toward aluminum cans has been quite noticable. During 2006, the production of these cans grew at about 18%/year, which is much more than the more proseic 2–3% increase/year for the total aerosol market. This is thought to relate to the greater aesthetics of aluminum, more than anything else. Marketers who use tinplate cans are responding by increasing the trend toward necked-in types and by permanently covering at least the unsightly valve cup, and ideally the entire can dome with a spray cap or foam spout. In Europe and Japan, starch and fabric finish products are offered with "pistol-grip handles" that are integral with a full-diameter, nonremovable spray cap. The accoutrement not only provides aesthetics but also reduces hand and finger fatigue.

During 2006, the firm of DS Containers, Inc. began production of two large sizes of 65-mm steel cans using the "Protact" process of double PET lamination developed by Corus RD&T unit, Hoogevans Division of British Steel and refined by the Japanese can-maker, Daiwa Can Company. The plate is delivered in huge rolls of chrome/chrome oxide-coated steel, optimized for adhesion of PET and to which the main layer of PET is attached with a special adhesive, followed by a top layer for gloss, printability, internal lubrication, and scratch resistance. These laminates, the same for both sides of the steel plate, are about 80 times thicker that the typical 9 μm (0.0004-in.) thickness of roller-coated or sprayed-on can linings, so they offer outstanding protection for the metal substrate. A few solvents, such as dimethyl ether (DME), are claimed to soften PET plastics, and DS Containers state that the hydroalcoholic hair sprays containing a much as 37% of DME propellant can be packaged with no adverse effects.

DC Containers has produced containers for at least 50 domestic and international marketers to date. They plan to install can-making equipment to produce various sizes of the popular 52-mm-diameter aerosols during 2008. With their nicely rounded tops and unobtrusive botton double seams, these cans have an appearance almost identical to that of the 66-mm aluminum aerosol cans. There is no information of their ability to be shaped, but this probably will not occur until a few years in the future. Table 3 gives some general data on these cans.

Aerosol formulations weave their effects into the fortunes of the steel and aluminum can-makers. Because of environmental considerations centering on the issue of clean ambient air, along with the reduction of emissions that directly or indirectly produce air pollutants, the U.S. aerosol industry has been obliged to reformulate most of their products toward those that have reduced amounts of volatile organic compounds (VOCs). The state governments of California and New York have been very active in limiting the VOC content of aerosols and other products. As a result, many hair sprays and other products now incorporate significant amounts of water; otherwise they use new propellants, such as (non-VOC) HFC-152a (1,1-difluoroethane). Quite often, these new formulations favor aluminum cans, from both a corrosion resistance and a smaller package standpoint. In some other countries the percentage of aluminum cans is in the area of 40–60% of the total, and it is possible that the United States and Canada may slowly approach this high ground, as time goes by.

BIBLIOGRAPHY

General References

M. A. Johnson, *The Aerosol Handbook,* 2nd edition, Wayne E. Dorland Co., Mendham. NJ, 1982.

The Aerosol Guide, 8th edition, Consumer Speciality Products Assocaition, 1995; a 10th edition as a CD will publish in 2009.

Aerosol Europe, Seeshaupt, Germany, a monthly journal.

Spray Technology and Marketing, Parsippany, NJ, a monthly journal.

AIR CONVEYING

Timothy Aidlin
Aidlin Automation,
Sarasota, Florida

The fast changes within both lightweight packaging and plastics technology during the 1980s brought forth the development of a new technology: the air conveyor. Because of the backpressure created on chain conveyors, the new lightweight packages and bottles were getting crushed and marred—but with the advent of the air conveyor, those problems were no longer of great concern. The air conveyor is faster, easier, cleaner, and safer than its predecessors, the belt, cable, and chain conveyors. For these reasons, the air conveyor has quickly become the conveying method of choice.

AIR CONVEYING

How does it work? All air conveyors share several basic operating principles that are as follows:

- Use of air as the transport medium.
- Containers are moved using a high volume of low-pressure air to transport the product along the conveyor path.

The major differences among the leading air conveyor manufacturers are the following:

- Where the air is directed against the product, container, or bottle
- How the airflow is created (design of motors and fans for maximum efficiency)
- Where the airflow is created: one large blower vs multiple small blowers
- Construction details and "user-friendly" features of the air conveyor

See Figures 1–3 for air conveying operations.

How does the air conveyor solve the problems found with the chain conveyor, and why is it the better method of conveying? It eliminates crushing. The air conveyor moves the packages by a directed flow of air against the containers. The flow of air can be controlled throughout the air conveying system. In this way, crushing of packages is eliminated as follows:

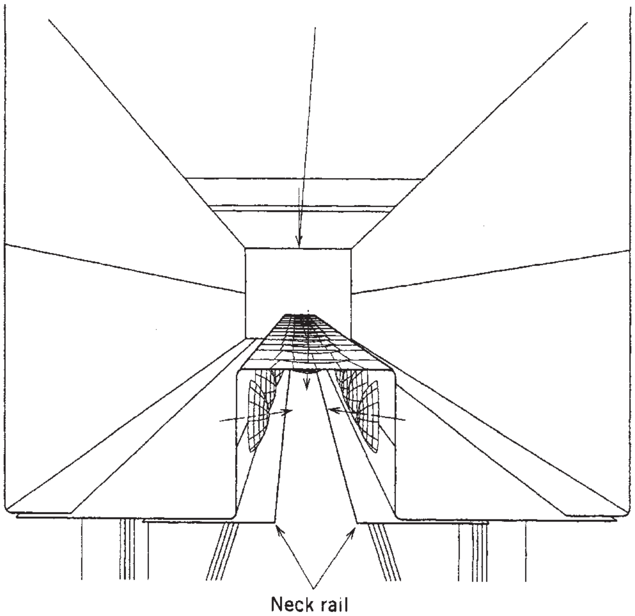

Figure 1. Airflow inside plenum.

- By reducing the backpressure force against the first product in a long line of products in a backfeed condition.
- By controlling the velocity of the product through the use of manual or automatic baffles, one can reduce the impact force of a product arriving from upstream and reduce damage.
- By introducing lift holes in combination with louvers, the product can hover while using the conveyor for accumulation on the flat-top air conveyor—no marking of crushing is evident from the friction caused by the belt or chain.

In beverage applications, the bottles cannot fall, which is detailed as follows:

- The bottles cannot fall when the bottle is transported hanging by the neck support ring.
- Eliminating bottles falling down on the conveyor and getting caught in the starwheels or timing screws.

As a result, users of air conveyors derive the following benefits:

- *Gapless filling*. At the higher production speeds, even small inefficiencies are costly and unacceptable. Air conveyors will virtually eliminate the possibility of a missed cap or container by assuring that a sufficient supply is provided to the infeed of the filler, rinser, capper, or packaging equipment. In the event of a "hiccup" of the upstream equipment, bottles, caps, or other products from upstream will be conveyed quickly, which allows the line to recover.

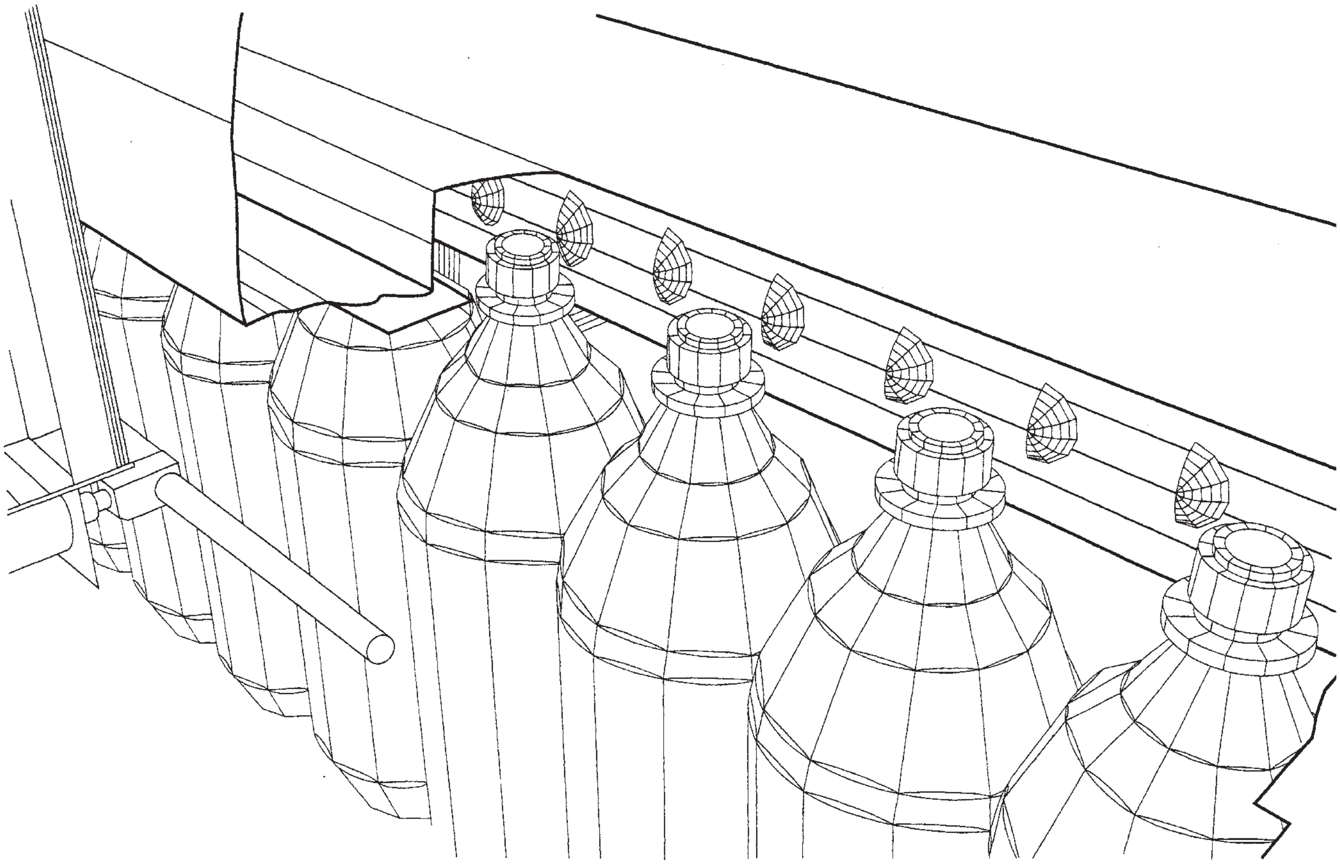

Figure 2. Plenum, cutaway view.

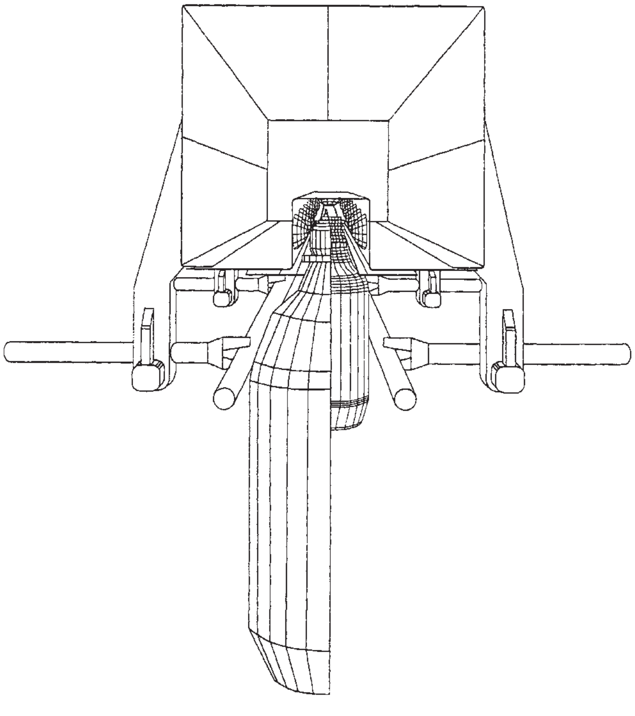

Figure 3. Single-lane air conveyor, adjustable bottle guide.

- *Shorter surge areas*. Faster conveying speeds allows for quicker recovery from the upstream supply of a product to the rinsers, fillers, cappers, or packaging equipment. As a result, users of air conveyors will be able to greatly reduce the lengths of a conveyor to accommodate surges.
- *Reduction in buffer areas* (*BIDI tables*). For the same reasons as described above, bidirectional accumulating tables can be eliminated. There still may be the need for accumulation as, for example, where the labelers need to be changed over. For beverage applications we recommend side lengths of air conveyor where the bottles can be diverted for additional accumulations as the most effective means of accumulating and preventing bottles from falling over.

The net result of these advantages is less overall length of conveyor in the plant. This length reduction also results in both lower cost for the conveyor installation and freeing up of valuable plant space at floor level.

CHARACTERISTICS OF A PROPERLY DESIGNED AIR CONVEYOR

Construction Materials. We recommend and use stainless steel construction for the conveyor; this material will result in lowered maintenance costs and in easier washdown. Most importantly, the use of stainless steel guiderails on neckring a air conveyor avoids the need to replace guiderail wear strips.

Airflow. In cap conveying applications on flat-top air conveyors, center louvers are the most efficient. On heavier parts, the addition of lift holes combined with louvers aids the product flow, especially where accumulation is required. The three methods used most commonly are neck blow, shoulder blow, and sidewall blow in neckring air conveyor applications. In these applications, we feel that neck blow is the preferred method, because most bottles have the same neck dimensions as compared with body diameter dimensions. Using the neck dimension as the criterion, adjustment for different sized containers is reduced.

Flat-Top Air Conveyor Applications. The food industry found a solution in a flat-top air conveyor and, in turn, is a major user of it. Because of the flat-top air conveyor's ability to convey with virtually no damage to the product, the manufacturers of candy, for instance, turned away from conventional tabletop conveyors and turned toward air conveyors. Because of the flat-top air conveyor's ability to lift as well as convey, the air conveyor can be used to accumulate products, eliminating the damage caused by friction from a belt or chain. These features make the air conveyor the product transportation vehicle of choice.

The beverage industry has changed significantly with the growth of the 16- and 20-oz bottles. Use of 28- and 38-mm plastic beverage caps has grown as well. The beverage industry was now looking for a versatile method of conveying them while maintaining orientation to the capper. Their solution was to use an air conveyor coupled with a cap feeder/orientor. In general, the bottlers were now able to convey their caps quickly, efficiently, and 100% oriented to their cappers at speeds to 1800 Hz from remote locations, such as warehouses and production facilities.

BEVERAGE INDUSTRY APPLICATIONS

Faster Filling Speeds. Filling line speeds have and will continue to increase. Our company is now involved with projects where the required line speeds are as follows:

- 2-L container: 800/min
- 20-oz bottle: 1100/min
- 16-oz bottle: 1200/min

Our company's Airtrans Air Conveyor installations have been to provide better control of the containers out of the depalletizers that are running at higher speeds.

One-Piece and Single-Serving Bottles. Because of their higher center of gravity and thin-walled, lighter design, most one-piece bottles are inherently less stable than the base-cupped bottle. Also, in recent years, an increase has occurred in market share for the 16-oz and now the newly introduced 20-oz PET bottles. These containers are less stable on filling lines than the 2-L bottle, and they fall over more easily than the glass bottles they replaced. The higher filling line speeds of the smaller bottles (up to 800 bottles per minute) continually aggravate the problem of the bottles falling over and jamming on the conveyors. The neckring air conveyor virtually eliminates these problems by conveying quickly, cleanly, and with little to no jamming or tipping. Because the bottles are suspended by the neckring, the possibility of tipping is eliminated. Also, because the bottles are conveyed with air, there is much less back pressure exerted on the new, thin-walled bottles, significantly reducing damage. (see also Carbonated beverage packaging)

Marketability. A major trend has been the expansion of blow-molding plant outputs, in terms of both total output and numbers of packaging lines. This growth 6L in output has resulted in an increased need to eliminate cable or chain conveyors and in an increased implementation of air conveyors. Bottlers are splitting the output of their blow molding machined into several streams to downstream packaging equipment and combining the output of multiple blow molders into their packaging equipment. However, as shown in the applications of flat-top air conveyors, the applications of air conveying are not limited to blow molding applications by any means.

Problems of Conventional Tabletop Conveyors Needing Solution. The following problems of cable and chain conveyors are commonly known by the industry:

- Greater nonproductive costs of mechanical conveyors because of higher maintenance of high-speed chain conveyors—mechanical conveyors have moving parts that are subject to wear and mechanical failure.
- The following spare parts are required:
  - Chain
  - Wear strips
  - Gears
  - Sprockets
  - Bearings
- Expense for disposable lubricants and wear parts
- Unsanitary—grease and constant soap on bottles and product
- Higher unplanned downtime of tabletop conveyors—these mechanical components will fail unexpectedly
- Greater crushing of lightweight plastic bottles and delicate packages
- Bottles fall over
- Bottles jam on tabletop conveyors

BENEFITS OF AIR CONVEYORS AND ELIMINATION OF POPULAR MYTHS

Expense. An air conveyor system can actually be more cost-effective than chain, belt, or cable conveyor for the same application. Although initial costs of an air conveying system may be more, the reduced maintenance, amount of spare parts, and downtime make air conveying an overall less expensive method of transport. Basic capital expenditures of the conveyor are only part of the complete cost picture. The true and total cost of the conveying system also includes the following:

- *Spare parts*. The air conveyor needs and uses less. Few moving parts exist on an air conveyor so the initial capital for spare parts and yearly additional parts' costs are less than for mechanical conveyors.
- Maintenance labor costs are less than for mechanical conveyors. Because few moving parts are present, it is less likely to break down and need repair breakdown and need of repair.
- Air conveyors can be more readily located overhead. These savings in floorspace costs may be applied as cost saving.

Flexibility. Air conveyors offer significantly more flexibility than chain conveyors for the following:

- *Revisions to floorplan*. Both flat-top and neckring air conveyor systems are furnished in sections that bolt to each other in a continuous path. The modules typically are combinations of straight sections, horizontal curves, vertical curves, and gates for merging and diverging. Any of these modules can be reconfigured in a different combination and can be added or deleted. Our company reconfigured a system that had been shipped four years previously, and by adding additional sections to the original system as well as by adding other new sections, we provided a totally different conveyor system layout. Few of the old sections were wasted; rather they were reused elsewhere in the new conveyor line. The entire system was reconfigured with less than one week of installation and dismantling.
- *Multiple sizes of containers*. The flat-top air conveyor can generally carry 5 lb/ft^2. Also, our flat-top air conveyor can be designed to accommodate many differently sized products. Whether it be through a dual-lane, multi-lane, or single-lane flat-top air conveyor, from unwrapped candy to boxes to caps, a virtually endless variety of products can be transported using this system.
- *Multiple sizes of beverage containers*. Multiple sizes of containers are accommodated using several different techniques. Different heights of containers are accommodated by adjusting the height of the air conveyor through hand wheel adjustment or automatically. The air conveyor transports bottles hanging by the neck support ring. The Aidlin Airtrans has hinged end sections on the infeed and discharge ends of the air conveyor. Similarly, the height would be adjusted when discharging bottles to the infeed screw of the filler. Infeed and exit plenums are hinged to allow adjustment of bottle height in the air conveyor. Also, bottle heights from the same supplier can have height variations for which the conveyor may need to be adjusted. Fixed height neck rails obviously do not have the necessary adjustability for this condition. Different neck diameters are accommodated by Aidlin's Dual-Lane Airtrans. The Dual-Lane Neck Ring Air Conveyors is a double-lane neck rail. One lane is set up for 16-oz bottles, whereas the other is set for 2-L containers; similarly, one lane could be set for 28-mm neck finishes and the other lane set up for 38-mm neck finishes (as on 3-L containers). A single air plenum is switched over to supply either set of neck rails as required.

Interfacing with Other Equipment. One significant advantage of both flat-top and neckring air conveyors is their ability to interface easily with other packaging equipment (see also, Blow holding; Labels and labeling machinery; Palletizing).

Mechanical interfacing.

- The flat-top air conveyor can transport from and to most equipment: from the orienting orientors to the cappers, liners, or decorators; or to a wrapper, cartoner, or case packer. When needed, the air conveyor can be fit to virtually any line. The transport process is described as follows:
- *Blow molders*. Bottles are received either through a bottle collector conveyor (as on the Cincinnati, Magplas, and Nissei) or directly from the output neck rails (as on the Sidel and Krupp).
- *Palletizers*. An escapement is mounted to the discharge of the air conveyor to stabilize the bottle and match the container's speed to be the same as the infeed conveyor to the palletizer.
- *Depalletizers*. Containers are received off the outfeed conveyor directly to the split neck rails of the air conveyor. The bottles are accelerated and conveyed away from the palletizer at a faster line rate than the depalletization. In this way, no possibility exists of bottles falling down.
- *Labelers*. Containers can be placed directly into the infeed starwheel or timing screw of the labeler.
- *Fillers*. Bottles are placed directly into the infeed timing screw of the filler. By assuring a proper backpressure and constant supply of bottles, maximum filling speed is achieved.

Maintenance. The total maintenance factor of the air conveyor is significantly less than that for mechanical conveyors. For example, the normal maintenance in the Airtrans system consists of replacing, in less than one minute, the 5-μm fan filters as needed. In our flat-top air conveyor, both the top guiderail and the Lexan covers are hinged for easy cleaning.

Less Contamination to Products. Based on R&D done at Aidlin Automation in Bradenton, FL, the air transporting the bottles or products is filtered, in our case, to 5 μm. The net result is that bottles or products, such as food or caps, remain cleaner than in the typical plant where the neck, cap, or product is open to unfiltered ambient air.

Conclusion. As one clearly can see, air conveying provides the alternative to chain, cable, or belt conveyors. Air conveying provides clean, consistent, and predictable performance. The new generation of conveying technology is here and in great demand. To be profitable in this quickly changing industry, one must keep up to date with new technology—and that is the air conveyor.

AMPULS AND VIALS, GLASS

Ampuls and aluminum-seal vials are glass containers used primarily for packaging medication intended for injection. Ampuls are essentially single-dosage containers that are filled and hermetically sealed by flame-sealing the open end. Vials, which contain single or multiple doses, are hermetically sealed by means of a rubber closure held in place with a crimped aluminum ring.

An ampul is opened by breaking it at its smallest diameter, called the *constriction*. A controlled breaking characteristic is introduced by reproducibly scoring the glass in the constriction, or by placing a band of ceramic paint in the constriction. The ceramic paint has a thermal expansion that differs from the glass, thus, forming stress in the glass surface after being fired. This stress allows the glass to break in a controlled fashion at the band location when force is applied. Medication is then withdrawn by means of a syringe.

Medication can be withdrawn from a vial by inserting the cannula of a syringe through the rubber closure. Because the rubber reseals after cannula withdrawal, multiple doses can be withdrawn from a vial.

Both ampuls and vials are fabricated from glass tubing produced under exacting conditions. The glass used for these containers must protect the contained product from contamination before use and, in the case of light-sensitive products, from degradation caused by excessive exposure to light. In addition, the glass must not introduce contamination by interacting with the product.

GLASSES

The most important property of a glass used to contain a parenteral (injectable) drug is chemical durability; that is, the glass must be essentially inert with respect to the product, and contribute negligible amounts of its constituents to the product through long-term contact before use. The family of glasses that best meets chemical durability requirements is the borosilicates. These glasses also require higher temperatures for forming into shapes than other glass types.

When glass-product interactions are far less critical, the soda-lime family of glasses can be used to fabricate vials. These glasses can be formed at lower temperatures than borosilicates but do not nearly have their chemical durability. Typical compositions are shown in Table 1. Borosilicate and soda-lime glasses contain elements that facilitate refining, but borosilicates generally do not contain arsenic or antimony.

Both borosilicate and soda-lime glasses can be given a dark amber color by adding small amounts of coloring agents, which include iron, titanium, and manganese. The amber borosilicate and soda-lime glasses then can be used to package products that are light-sensitive.

The interior surface of containers formed from soda-lime glass is often subjected to a treatment that enhances chemical durability without affecting the desirable lower melting and forming temperatures typical of soda-lime glass. For very critical applications, borosilicate ampuls and vials can be treated to improve their already excellent chemical durability.

For pharmaceutical packaging applications (see Pharmaceutical packaging), the various types of glass have been codified into groups according to their chemical durabilities, as specified by the *United States Pharmacopeia* (USP) (1). The glasses are classified by the amount of titratable alkali extracted into water from a crushed and sized glass sample during steam autoclaving at 250°F (121 °C). Thus, borosilicate glasses are typical of a USP Type I glass, and most soda-lime glasses are typical of a USP Type III glass. Some soda-lime glasses exist that are less chemically durable than Type III glass, and these glasses are classified as USP Type NP.

USP Type III (soda-lime) containers that have had their interior surface treated to improve durability can be classified as USP Type II if they meet the test requirements. The test in these cases is performed on the treated container instead of a crushed sample and uses a similar steam autoclave cycle.

The pharmacopeiae of other nations also have classified glass into groups according to their chemical durability.

Table 1. Compositions of Soda-Lime and Borosilicate Glasses, wt%

Constituent	Soda-lime	Borosilicate
SiO_2	68–72	70–80
B_2O_3	0–2	10–13
Al_2O_3	2–3	2–7
CaO	5	0–1
MgO	4	
Na_2O	15–16	4–6
K_2O	1	0–3
Typical forming temperatures	1796–1895°F (980–1035 °C)	2066–2264°F (1130–1240 °C)

These classifications are generally similar to those specified by USP.

FORMING PROCESSES

Ampuls and vials are formed from glass tubing. The glass tubing is formed by processing in a glass furnace and by a tube-forming operation. The glass furnace operation consists of bulk batch preparation, continuous batch melting, and refining (see Glass-container manufacturing). The tube forming is done to exact specifications in either a Danner process or a downdraw process. The Danner process involves continuous streaming of molten glass onto an angled rotating sleeve that has an internal port for inflation air. The inflation air controls the tubing outside diameter (OD). The downdraw process is an extrusion process through an annular area. The inner core has an inflation air hole. The inflation air serves the same purpose as in the Danner process. In either process the tubing wall weight is controlled by adjusting the rate of glass withdrawal and supply. Typical ampul and vial tubing dimensions and tolerances are shown in Figures 1 and 2.

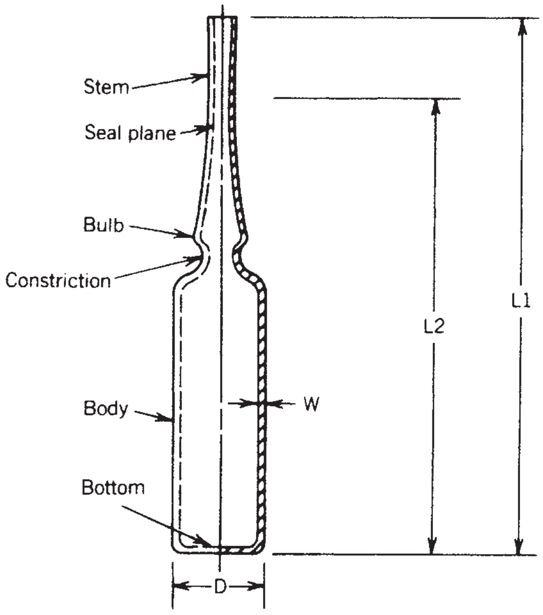

Figure 1. Standard long-stem ampul.

Capacity, mL	Diameter (D) mm	Width (W), mm	Length (L1), mm ± 0.50 mm	Length (L2), mm
1	10.40–10.70	0.56–0.64	67	51
2	11.62–12.00	0.56–0.64	75	59
5	16.10–16.70	0.61–0.69	88	73
10	18.75–19.40	0.66–0.74	107	91
20	22.25–22.95	0.75–0.85	135	120

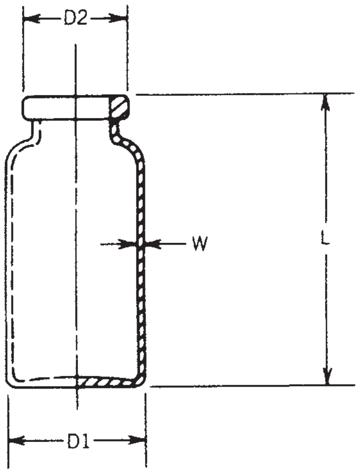

Figure 2. Standard tubular serum vial.

Capacity, mL	Diameter (D1), mm	Width (W), mm	Length (L), mm ± 0.50 mm	Diameter (D2), mm
1	13.50–14.00	0.94–1.06	27	12.95–13.35
2	14.50–15.00	0.94–1.06	32	12.95–13.35
3	16.50–17.00	1.04–1.16	37	12.95–13.35
5	20.50–21.00	1.04–1.16	38	12.95–13.35
10	23.50–24.00	1.13–1.27	50	19.70–20.20
15	26.25–27.00	1.13–1.27	57	19.70–20.20

The tubing is formed in a continuous-line process. Various devices are used to support the tubing during pulling. A device, normally consisting of pulling wheels on belts and a cutting mechanism, is situated downstream to pull and cut the tubing. The tubing is cut to prescribed lengths and used in vertical- or horizontal-type machines for converting the tubing into vials or ampuls.

Many machines are rotary and either index or operate with a continuous action. The tubing is placed in the machines and is handled in a set of chucks. Heat is applied in the space between the chucks, and forming of the ampul or vial occurs throughout the machine rotation cycle.

Ampuls are formed on continuous-motion rotary machines. One sequence is shown in Figure 3. The process consists of sequentially heating and pulling (elongating the glass) to form the constriction, bulb, and stem contours of the ampul. The ampul contours are controlled primarily by proper temperature patterns in the tubing and by pulling rate of the tubing. Mechanical tooling of the glass can be used to assist in constriction contour forming. The forming process accurately controls the seal plane diameter, which controls ampul closing after filling. After the basic ampul is formed on the machine, the ampul blank is separated from the tubing and is transferred to a horizontal afterforming machine. On the afterforming machine the ampul is trimmed to length, glazed, and treated if necessary. Also, the ampul constriction can be either color banded with a ceramic-base paint or scored to control opening properties. The ceramic paint and scoring cause stress concentrations in the constriction, which assist in obtaining desirable opening force and fracture characteristics. Identification bands are applied

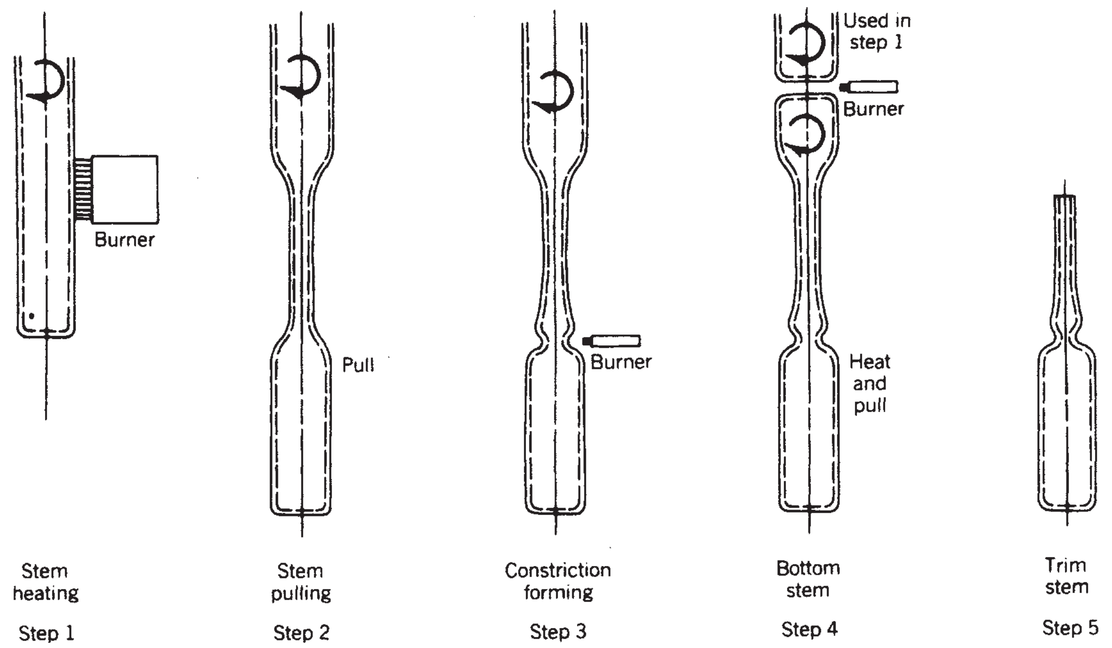

Figure 3. Ampul contour-forming sequence.

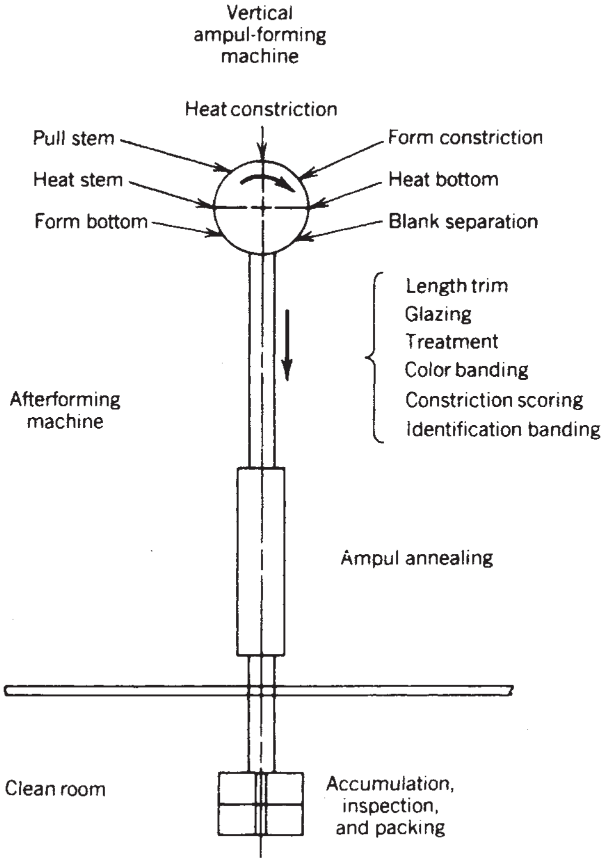

Figure 4. Tube converting for ampul manufacture.

and the ampul is annealed to relieve the strains caused by the thermal forming of the ampul. The completed ampuls are then transferred into a packing area where the ampuls are accumulated, inspected manually or automatically, and packed into clean trays for distribution (see Figure 4).

Vial forming is done on vertical machines that either index or have a continuous motion. A vertical forming sequence (see Figure 5) consists of a parting (separation operation), wherein a narrow band of glass is heated to a soft condition and the vial blank and the tubing are pulled apart. After parting, the finish-forming operations occur. The finish forming consists of heating and mechanically tooling the glass in sequential steps. Normally, multiple heating and tooling operations are necessary to form the closely held tolerances of aluminum-seal finishes. The tooling is done with an inner plug to control the contour and diameter of the finish bore and with outer contoured round dies that control the contour and diameter of the finish outer surface. The vial bottom contours are formed in the lower chucks whereas finish forming occurs for another vial in the upper chucks. After tooling, the vial length is set by a mechanical positioner. The process then continually repeats itself until the whole tubing length is consumed. After fabrication, the vial blank is transferred to a horizontal afterforming machine. The operations that are normally performed on an afterformer are dimensional gauging, vial treatment, and annealing. The vials are then transferred to a packing area where they are accumulated, inspected manually or automatically for cosmetic conditions, and packed in clean containers (see Figure 6).

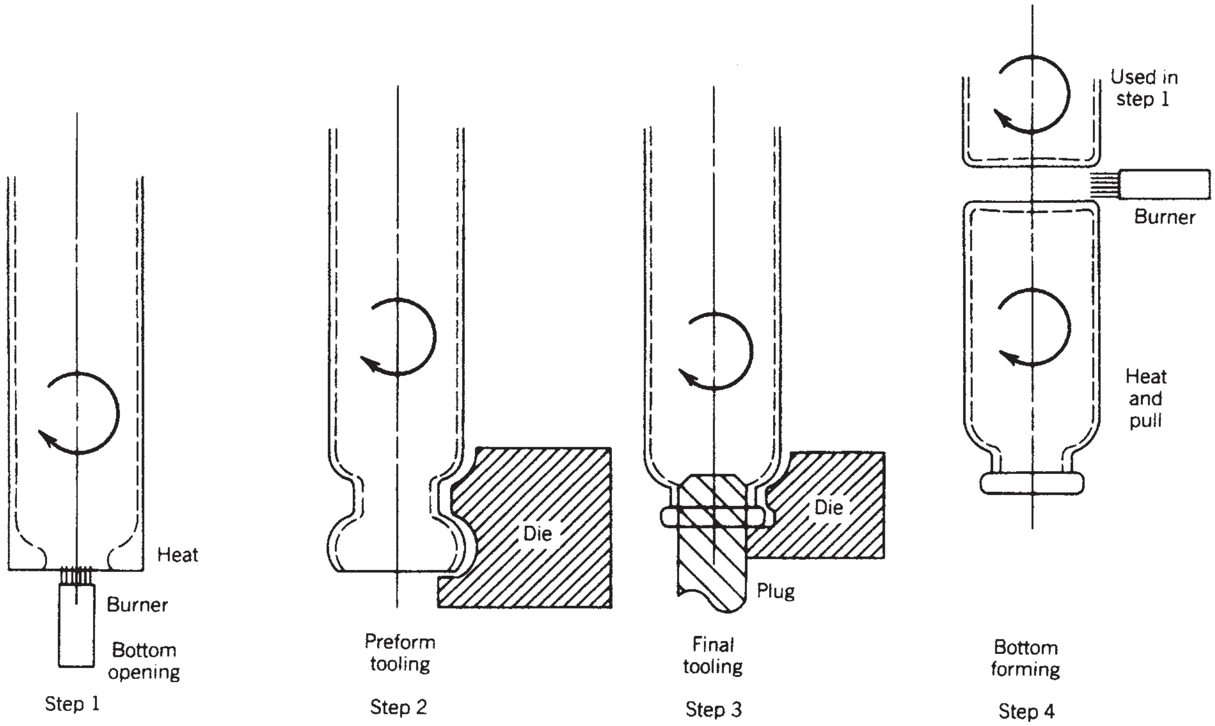

Figure 5. Vial contour-forming sequence.

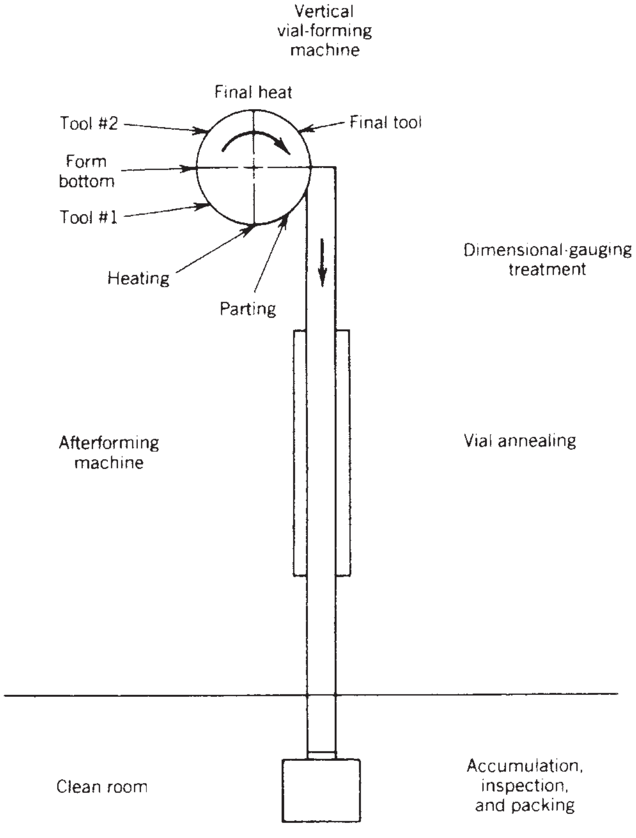

Figure 6. Tube converting for vial manufacture.

BIBLIOGRAPHY

"Ampuls and Vials," R. P. Abendroth and J. E. Lisi, in *The Wiley Encyclopedia of Packaging Technology*, 1st ed., Wiley, New York, Owens-Illinois, Inc, 1986, pp. 16–20.

1. *The United States Pharmacopeia XXII*, and the *National* Formulary, The United States Pharmacopeial Convention, Inc., Rockville, MD, 1990.

ANALYTICAL METHODS FOR FOOD PACKAGING AND SHELF LIFE STUDIES

CRISTINA NERIN
Aragon Institute of Engineering Research (I3A), CPS;
University of Zaragoza, Dept. Analytical Chemistry, Zaragoza, Spain

INTRODUCTION

According to the Encyclopedia of Packaging Technology, shelf life is the time after production and packaging that a product remains acceptable under defined environmental conditions. To establish this period of time is nowadays required for every food product, not only for commercial reasons but also for safety reasons, as all foods deteriorate with time. The main causes for these deteriorative processes are as follows:

1. Oxidation processes during which the color fades and may give way to a brownish appearance, rancid tastes, and odors and the food becomes unacceptable.
2. Microbiological, which is the consequence of the micro-organisms growth, either molds, bacteria or yeasts, some of them pathogens and dangerous for human beings. Often together with the micro-organisms, new compounds appear that are responsible for the bad odors or off flavors.
3. Water losses, which is the consequence of the aging that affect the texture, hardness, appearance, and the taste.

However, although the causes of the limitation of the shelf life were known, the analysis of the macroscopic effects usually is not enough to establish the limits, and more and more other parameters are required to establish the end of the shelf life.

Besides, the evaluation of the deadline cannot be subjective, just as a global measurement, and analytical procedures are needed to standardize the parameters used for establishing the deadline limits.

The 21st century is characterized by globalization. In the food area, this means to have the food packaged, because in these conditions, the transport, storage, logistic, and distribution chain can reach distant markets, and a global commercialization can take place. Foodstuffs themselves cannot stand for long time, and new technologies such as vacuum packaging and modified atmosphere packaging, combined with the use of high barrier materials and active packaging, can extend the shelf life of the food inside the package. Emerging technologies like intelligent packaging are then proposed to show that the packaged food is still good and safe.

But the challenge is how to measure the shelf life of food. When developing the packaging material or the packaging system, there are different materials, parameters, and variables to modify and to measure. Figure 1 shows a scheme in which the material, the food, and the internal atmosphere play an important role in the shelf-life definition and testing. Interactions between them as well as absolute measurements have to be carried out to study the shelf life. According to this process and depending on the type of samples that we have, different parameters and different analytical methods will be used. This chapter deals with the main analytical methods, which can be useful for shelf-life evaluation, taking into account that the main purpose in this task is to have an objective and independent series of methods. Avoiding the subjective and personal skills is the main way to measure the key parameters. There is not an exhaustive list of analytical methods, and only those considered as the most appropriate or most common in this type of studies are referred to.

As Figure 1 shows, the food, internal atmosphere, and packaging material should be tested to establish the shelf life. The food qualities have to remain constant and be as good as possible and the most similar to the fresh food or just-made food. These qualities involve color, taste, hardness, texture, volatile compounds, odor, water content, chemical contaminants, absence of microbiological contamination, and freshness, among others.

The internal atmosphere means the analysis of gases such as oxygen, carbon dioxide, and other permanent gases and vapors, such as water, volatile compounds transferred by the packaging material, or those released by the food.

Finally, the packaging material, which involves the testing of the permeability properties, the analysis of likely contaminants as potential migrants, the migration tests to ensure that the material is safe for being in

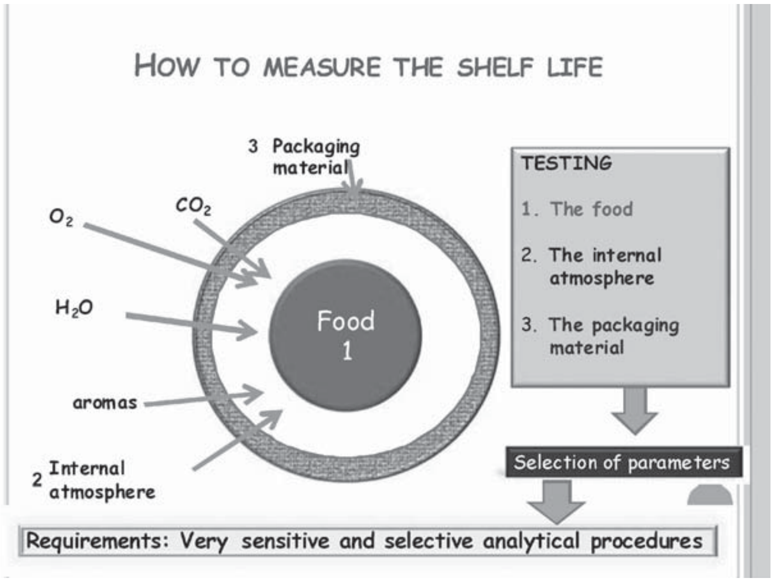
HOW TO MEASURE THE SHELF LIFE

TESTING

1. The food
2. The internal atmosphere
3. The packaging material

Selection of parameters

Requirements: Very sensitive and selective analytical procedures

Figure 1. Scheme of the food packaging to measure the shelf life.

contact with the food, and the sorption properties of the material to guarantee that the material does not affect the quality of food, by scalping aromas or by trapping the compounds responsible for the color, flavor, or other food attributes.

In all cases, the first key point is the selection of the parameters to be measured in a quantitative manner for the shelf-life studies, and the second point is the selection of the analytical technique and the procedure to measure the changes, if any, in the whole system.

THE ANALYTICAL PROCESS

Figure 2 shows a scheme of the analytical process. Three main steps can be distinguished: the “sampling,” the “sample treatment,” and the “final analysis.” A short comment of the main procedures involved in each step will be described below.

THE SAMPLING STEP

Usually, this is the first step, as the sample has to be taken for analysis. Some critical requirements should be followed to be sure that the final analysis represents a real diagnostic of the sample. The three points mentioned in the Figure 2 have to be decided by the analyst, and such a decision should be based on scientific parameters. The first step, the sample size, seems to be obvious, as if low concentrations are expected for the analytes, higher amount of sample should be taken. However, the sample size will condition the second step of the analytical procedure, which is the sample treatment, and it will affect the handling, time, and price of the analysis. However, if the sample size is small the representativeness of the sample is in danger. Then, to decide about this parameter, it is recommended to think about the detection limit of the final analytical technique in which the variable under study will be measured as well as the expected concentration of the analyte after the test. Sometimes, only differences between the concentration before and after the shelf-life studies are going to be measured instead of absolute values. In this case, the sensitivity is higher, as the absolute value measured is higher than the difference itself. When absolute values have to be measured, for example, the concentration of an analyte formed during the shelf life study, the expected value can be extremely low, and thus higher amount of sample is needed.

Representativeness

This point is critical and affects any kind of analysis. It is close-related with the homogeneity of the sample. With food samples, the lack of homogeneity can let us take discriminant portions of food for the analysis, and obviously in this case the diagnostic is wrong. To avoid this problem, a previous homogenization is recommended. Sample size is also conditioned here, as with small sample size there is a high risk of discrimination, which ruins the analysis. All parts of the food should be taken and mixed together to reproduce the real situation as much as possible. Interactions between the different components in the food sample is also very important, what requires that all the components were represented in the sample taken for analysis.

Homogeneity

The problem of homogeneity is more common in food analysis, where the samples can be macroscopically homogeneous but nonhomogeneous at microscopic level. Different devices are nowadays available to homogenize the samples. Mills, blenders, mixers, and similar machines

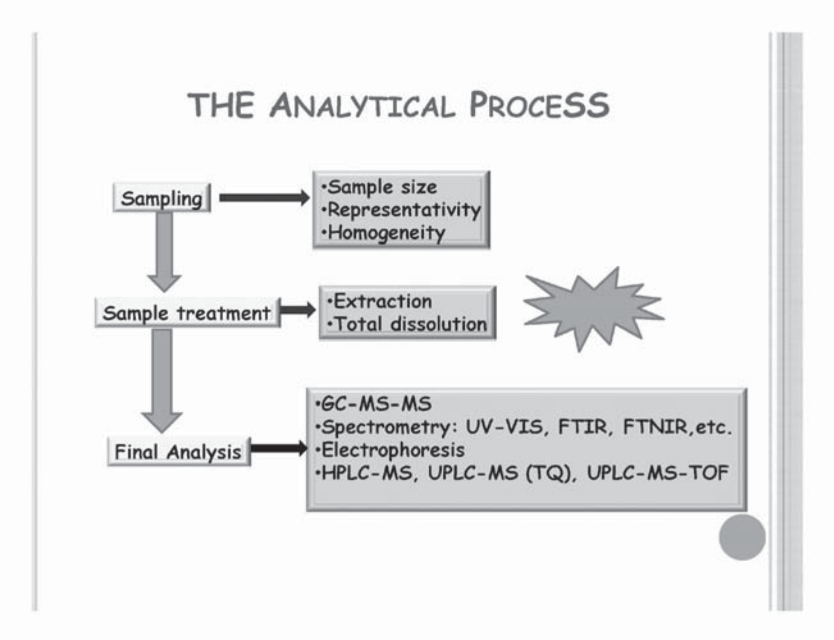

THE ANALYTICAL PROCESS

Sampling
- Sample size
- Representativity
- Homogeneity

Sample treatment
- Extraction
- Total dissolution

Final Analysis
- GC-MS-MS
- Spectrometry: UV-VIS, FTIR, FTNIR,etc.
- Electrophoresis
- HPLC-MS, UPLC-MS (TQ), UPLC-MS-TOF

Figure 2. The analytical process.

are common in any laboratory. Liquid and solid portions are mixed together if they are present in the food sample. Then, an homogeneous sample is produced, usually smashed and fluid enough to be sure that any portion of it has the same composition.

SAMPLE TREATMENT

The sample treatment involves the sample dry, the extraction and the clean-up steps. To dry the sample is not always required before the analysis, although the values should be always referred to the dry sample for comparison. Sometimes, an aqueous extraction is going to be applied to the sample, and then there is no point to remove the water. Anyway, it is important to measure the water content in a different aliquot from that used for the sample analysis.

However, the extraction and the clean up steps are usually the bottleneck of the analytical process (1). It is in fact the area in which more analytical development has taken place in the last decade, and there are several reasons for that. Let us go to explain more in detail the newest extraction techniques that can be applied for shelf-life studies.

It is true that the shelf-life studies require sensitive analytical methods for measuring low concentrations of compounds that are formed either during the shelf life of a foodstuff or disappear as long as the time goes on. Alternatively, the packaging has to be measured, and then low concentrations of compounds are also analyzed either in the packaging material or in the atmosphere inside the packaging. In any case, the analytes have to be isolated from the matrix, the interferences have to be removed as efficiently as possible, and simultaneously the concentration of the analyte in the final solution that will be analyzed has to be as high as possible. This way, the detection and quantification limits will be surpassed, and no limitations concerning the sensitivity will be present.

The classic extraction procedures involve the *liquid–liquid extraction*, in which the liquid sample to be extracted is shaken with a small volume of a nonmiscible liquid-extracting phase, nonsoluble with the sample, in which the analytes will be efficiently dissolved and then extracted from the matrix. It is obvious that for an aqueous matrix, the extracting agent will be an organic, and vice versa. To gain sensitivity using this extraction procedure, the volume of extracting agent can be reduced as much as possible, but in any case, handling low volumes of liquids and putting them in intimate contact with a much higher volume of the liquid sample is difficult, and the risk of losing efficiency in the process is high. Another disadvantage of this classic extraction is the use of high volumes of organic solvents, which are toxic, dangerous, and not environmental friendly.

Also included in the classic extraction panorama are the *solid–liquid extraction* techniques or better known as "leakage," which are usually from a solid matrix that can be either a foodstuff or a packaging material. Among them, Soxhlet extraction is the most common. Its high efficiency is based on the fact that it is a continuous extraction in which new solvent is continuously put in contact with the sample while maintaining the total volume of solvent. As the partition constant is reached each time, the efficiency can be high without increasing the total volume of solvent but increasing the total mass of the analyte extracted. Although it is a good and well-recognized method, it takes time, usually from 6 to 20 h, and it requires a high amount of solvent.

An improvement of the classic extraction is the accelerated solvent extraction (ASE), which consists of carrying out the extraction at high temperature and high pressure. The increase of temperature increases the extraction coefficient and then the extraction efficiency, but when increasing the temperature, the solvents used as extracting agents are evaporated and they would be in vapor phase. To avoid the evaporation and maintain the solvent in liquid phase, a high pressure is applied, and thus the extraction is accelerated both in time and in efficiency.

When the analytes are dissolved in a liquid solvent either in aqueous solution or organic solvent, the solid-phase extraction (SPE) is the most common technique to isolate and concentrate the analytes and to remove the interferences from the matrix. SPE is also useful in the cleanup step, which is usually applied to the sample after any extraction to remove the interferences. The solid phase usually is inside a cartridge, ready to use, and commercially available, and the nature of this solid phase can vary from the current stationary phases based on polymeric sorbents to modified silica such as C18, pure adsorbents such as alumina or active charcoal to ionic exchange, which are both cationic and anionic phases. Its versatility and ease of use make SPE one of the most common techniques in any analytical procedure in which the isolation of analytes or concentration steps and cleanup are required.

But without a doubt, the trends in extraction systems drive us to the microextraction techniques in which a few drops of solvent, if any, are employed as extracting agents while maintaining the efficiency and having short periods of extraction.

For these reasons, new microextraction techniques have been developed to avoid the mentioned problems. The most important ones will be described in this chapter.

Solid-Phase Microextraction (SPME)

SPME was proposed for the first time by Arthur and Pawliszyn in early 1990s (2), and it has been used more and more widely in sample preparation. SPME is based on the partitioning of analytes between a coated fiber and a sample. The coated fiber consists of a small fused silica rod covered with a thin layer of a sorbing material, which acts as stationary phase. When exposed to the vapor phase above a solution (head space sampling) or by direct immersion in the solution, this fiber enters a mass-transfer process driven by the second law of thermodynamics, according to which the chemical potential of each compound should be equal throughout the system. The chemical species will cross the interface until their concentrations are such that their corresponding partial molar free energies are the same in all parts of the system formed by the fiber and the sample. After the coated fiber is exposed to the sample for a given period, it is inserted into the injection port of a chromatograph to release the analyte. In gas chromatography (GC), it is carried out by thermal desorption, whereas in high-performance liquid chromatography (HPLC) it is accomplished by dissolution and injection with the elution solvent (3, 4). In both approaches, all the substances eventually reach the analytical instrument detector to produce a trace in which there is no large solvent peak. Although a small amount of analyte is transferred, it is sufficient to produce a significant analytical signal in modern detectors. The SPME uses a capillary fiber on which the stationary phase is coated or chemically bonded; therefore, it is a solventless technique. Usually, only the analytes and related molecules are trapped on the fiber, and for this reason most of the interferences remain in the matrix and do not affect the final analysis (5). This technique is useful in both modes, headspace, and total immersion, and its high sensitivity, based on the high concentration rates that the analytes have on the capillary fiber are without a doubt their main advantages. There is no limitation for either of the nature of samples, as both packaging materials and foodstuffs can be analyzed (6–16).

Liquid Microextraction Techniques

Using liquid phases for extraction from liquid matrices, several microextraction techniques have been recently developed and applied to food packaging and shelf-life studies. Among them we can point out the single drop microextraction (SDME), the liquid–liquid–phase microextraction (LLPME), and the hollow fiber liquid phase microextraction (HFLPME).

SDME. SDME was first introduced by Liu and Dasgupta (17), but it is felt that the works by Jeannot and Cantwell (18, 19), who studied its kinetics and mass transfer model, and by He and Lee (20), who gave the technique for much of today's aspect, provided the basics needed to consider it as an independent technique. Many applications have been introduced since then (21) and are summarized in many devoted reviews (22–25). It consists of the partition of the analytes between two nonmiscible solvents, but in this case only one drop of the extracting solvent hanging from the tip of a syringe is used. Once the extraction is finished, the drop is withdrawn into the syringe and directly injected into the gas chromatograph for the final analysis. It can be considered as solventless technique as well, as the amount of solvent is negligible. Also, most of the matrix interferences are avoided in both exposure modes, as only the compounds soluble in the drop of solvent, either in headspace mode or in total immersion in the sample solution are extracted. There is no doubt that this technique is useful in many applications and allows the analysis at high sensitivity level. The drawback of this technique is the fall of the single drop during the sampling, which requires the procedure to start again with a new sample, as the presence of the lost drop of solvent in the same vial affect the extraction greatly. In such a case, the analytes are simultaneously extracted in both drops, although only one is analyzed, which is why a new sampling in a different vial is required.

Liquid–Liquid Microextraction. Several approaches have been recently proposed to increase the extraction efficiency using only a few drops of organic solvent. Among them, those that employ a few microliters of solvent directly added to the aqueous liquid sample are useful when using liquid samples, and no particulate matter or slurries are involved. The supernatant solvent is recovered after the extraction and analyzed. For quantitative purposes, the use of an internal standard is compulsory to guarantee the quanitative results, as the handling of such a low volumes of solvents is always difficult.

HFLPME. Another improvement of the SDME that eliminates its main disadvantage is the use of polymeric membranes as support of the small volumes of solvent. Few microlitres can be swallowed inside the pores of a semipermeable polypropylene capillary tube, and then this hollow capillary can be used for extraction, which allows high concentration factors (26, 27). When organic compounds in aqueous solution have to be analyzed, HFLPME is the appropriate technique for sampling and extraction, using for instance, an organic solvent as extracting agent inside the hollow fiber, being the sample outside (see Figure 3). This technique has been recently automatized and proposed for migration studies from packaging materials (27).

Several studies have been carried out in the last 3 years dealing with different approaches of this technique, and there are several options in which up to three liquid phases can be involved to extract and concentrate ionic analytes from complex matrices (28–30).

TOTAL DISSOLUTION

When the analyte to be measured cannot be directly extracted, the total dissolution of the sample is required. This problem often happens when dealing with plastic samples, in which the analytes are inside the matrix or even linked to it. For example, if the shelf life of a new

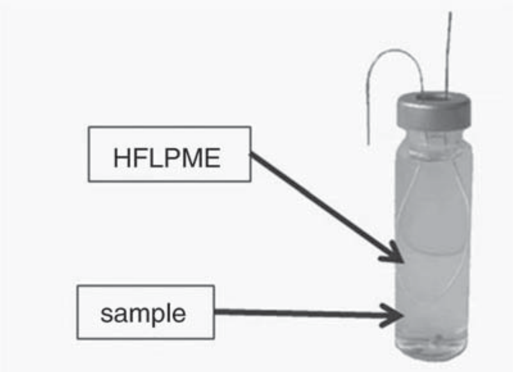

Figure 3. Scheme of the HFLPME extraction from a liquid sample.

active packaging material is under study, then the remaining active agents in the material should be analyzed. If it is a plastic material, then it may be difficult to apply an efficient extraction, as the recoveries are commonly low.

Thus, the total dissolution is preferred. The solvent and conditions used for the total extraction, have to be optimized. If a synthetic polymer is dissolved, the polymer itself has to be removed from the solution, as the compounds of interest are the small molecules, no the large polymeric chains. The addition of methanol, or in general a solvent in which the polymer is insoluble, is usually enough to precipitate the polymer, and another filtration removes the polymer from the solution (31). Obviously, the compounds of interest have to be soluble in the solvents used in the precipitation step and they have to be free from the polymer, which means that no chemical bonds exist between the polymer and the compounds of interest. Large volumes of organic solvents are obtained, and additional concentration and cleanup steps are usually required to cope with the final analysis. Anyway, only a few times the total dissolution is required in shelf-life studies but often is necessary for the packaging analysis.

Final Analysis

The final analysis means the identification and quantification of the compounds of interest. The analytical technique to be used depends on several variables as follows:

- The chemical structure and properties of the analytes
- The concentration level in which the analytes are expected to be in the sample
- The information required

For volatile compounds, the most appropriate technique is GC. Depending on the information required, different detectors can be used, such as follows: (a) flame ionization detector (FID), which is ideal for organic compounds with carbon atoms, as the response is based on the carbon atoms number; (b) the electron capture detector (ECD), which is very sensitive for electronegative atoms such as halogens and oxygen; (c) the nitrogen-phosphorous detector (NPD) with a high sensitivity for the compounds that contain these atoms; and (d) the thermal conductivity detector (TCD), which is only sensitive for those compounds that have a thermal conductivity very different from that of the carrier used as background or reference, usually the hydrogen. That means that this detector is mainly used for permanent gases, such as nitrogen, carbon dioxide, and so on. and it is no sensitive for other compounds. None of the mentioned detectors can be used for identification purposes if the nature of the analyte is unknown, as only using the standards, what means the pure compounds analyzed exactly in the same conditions as the sample, the compounds could be identified. For identification purposes, the mass spectrometry (MS) coupled to GC is the right technique. The molecule is broken by electronic impact that produces positive ions, which are the characteristic mass fragments of each molecule that constitue the mass spectrum. Then, this mass spectrum of each compound is obtained and compared with the mass spectra contained in the MS library. The software of this hyphenated technique (GC-MS) give as the list of compounds with the most similar spectra and is the analyst who decides which one can be present in the sample, according to the matching parameters provided by the software.

Two different systems for MS detectors can be chose: the quadruple and the ion trap. For quantitative purposes, it is generally recommended the quadrupole, whereas for qualitative objectives the ion trap is more appropriate, as it pemits to have the MS^n fragmentation. This means that once the molecule is fragmented and the characteristic masses are known, the analyst can select some of these characteristic masses and apply a new fragmentation. This operation can be repeated several times. Even the isomers or quiral compounds, which are very similar between them, have differences in some of the fragmentation profile; these differences can be used for unequivocal identification. Recent advances on the MS detectors have launched in the market new instruments with novel systems that increase the sensitivity of the MS detectors. Combinations of MS-MS, triple quadrupole (TQ) or time of flight (TOF) techniques are now available. These analytical tools allow the identification of unknowns and permit as well the quantitation of the compounds at low level of concentration. The selection of the right technique depends on the sample, the analyte, and the information required from the sample.

There are also several options for injecting the compounds into the GC. The head space (HS) technique is useful for the analysis of volatile compounds. It consists of injecting the vapor in equilibrium with the sample at a fixed temperature. The sample is thermostatized, and only a fraction of the vapor in equilibrium is taken for the analysis. This technique can be used in either manual or automatic modes, but the reproducibility is much higher in the latter. As only vapor is introduced into the GC, most of the interferences from the matrix remain in the sample, either in liquid or solid state, and the sample treatment is considerably simplified. For this reason, this technique is applied to a wide series of samples and volatile analytes. The scarce handling and time consuming required make it appropriate for the analysis of volatile compounds.

An improvement of this technique is the dynamic HS, also called purge and trap (P&T), which is coupled to the GC. The advantage is that in the dynamic system, the analytes are continuously purged from the sample using an inert gas and trapped on a solid adsorbent, which is thermally desorbed to introduce the analytes directly into the GC. This technique is the most sensitive for volatile compounds, as the total mass of the analytes present in the sample is introduced into the analytical system and arrives at the detector (31, 32). To have an idea of the high sensitivity of P&T-GC-MS, we can compare the real mass of analytes at the detector in this case with that of liquid injection in GC-MS. For example, 10 mL of sample containing 1 ng/mL of a volatile analyte are analyzed by both direct injection into GC-MS and HS-GC-MS. If 1 μL is injected in the former case, 1 pg arrives at the detector. However, in P&T-GC-MS, the total mass of the same volatile compound contained in the 10 mL of sample arrives at the detector, which is 10 ng of analyte. This amount is 10,000 times higher in the detector. To have the equivalent mass at the detector in both cases, the concentration of the analyte in the sample should be 0.1 pg/mL, that is 0.1 ppt. However, the main drawback of this technique is also its high sensitivity, as it is very difficult to have a blank sample, and often interfering compounds appear and overlap the peaks of interest. Another problem is the calibration plot for quantitative purposes, because in this system the equilibrium is not reached, as the volatile compounds that would be in equilibrium in the vapor phase are continuously removed from the vapor and trapped on the solid trap. Then, the calibration plot should be prepared exactly in the same conditions as those used for the sample.

Another interesting approach for injecting the volatile or semivolatile compounds into the GC column, apart from the injection of liquid solutions, is the SPME injection. Nowadays, there are commercially available automatic injectors for SPME, HS, P&T, and of course for liquid injections into the GC.

The analysis of non/volatile compounds is usually carried out by liquid chromatography (LC), in which the compounds present in the sample are separated. Several detectors can be used; the most common ones are ultraviolet-visible spectrometry (UV-VIS), molecular fluorescence spectrometry (Fl), refraction index (RI), and MS. UV-VIS is the most general and common one coupled to HPLC, whereas Fl is more selective as only fluorescent compounds can be detected. RI is usually applied to analyze sugars, wheras MS can be applied to any compound with a molecular mass higher than 50 units of mass and able to be ionized in the ionization step of the LC-MS.

As in GC, the separation takes place in the chromatographic column where the stationary phase exerts an interaction with the compounds. Depending on the nature of this stationary phase, either partition, ionic exchange, or size exclusion can be the main process between the compounds (the analytes) and the column. The analyst has to take an important decision and choose the right LC column, according to the analyte and the sample. Also other conditions such as the size of the column and the mobile phase in each analytical procedure have to be optimized in each case. Recent developments to increase the resolution in LC launched in the market new instruments in which a higher pressure, more narrow LC columns, and lower particle size in the LC columns occurs. This is the case of the new systems of ultrahigh performance, such as ultrahigh performance liquid chromatography (UPLC), which increase the resolution and considerably reduce the time of analysis compared with the normal HPLC. The UPLC-UV analysis is not in real time but it can last only a few minutes to have the whole chromatogram with more than 20 compounds (33).

When using MS as detector, one of the main decisions to take is the ionization step. This is a critical step in which the analytes are transformed into ions, either positive or negative ions, which can be driven to the MS detector in which they are separated according to their mass and then counted (abundance). The ionization step in LC is commonly a soft ionization that mainly produces the molecular ion. The interface between the ionization step and the MS analyzer has been the most difficult part of the development of this hyphenated technique of LC-MS. This is because the ionization step is applied to the liquid sample injected into the LC and the nonvolatile solvent, usually water, methanol-water, or acetonitrile, which has to be removed efficiently to get the high vaccum required for MS, to avoid the saturation of the MS detector, and to remove the interferences associated to the solvents. Two different ionization devices and techniques are the most common in current LC-MS, and they are the Electrospray (EI) and the atmospheric pressure chemical ionization (ApCI), although more and more the EI is gaining importance, as most problems are solved using the EI.

During the last 10 years, new approaches dealing with LC-MS have been launched to the market to increase the sensitivity and reproducibility, and to widen the type of analytes that can be analyzed. Also, the instrumental equipments are nowadays more friendly for the users and easier to handle.

Also, the advanced MS techniques such as the TOF supply new tools for the identification of unknowns, using the exact mass values. Without a doubt the identification of unknown compounds is the most challenging area, and new and more sophisticated techniques are required for this purpose. Artifacts formed during the analysis, degradation compounds caused by the interaction between the components in the packaging materials or in the food, or degradation compounds coming from the additives used in the food or from the packaging materials in contact with the food, which include the presence of compounds non intentionally added, pose new analytical problems and make the analyst face a real challenge in food packaging and shelf-life studies. To help with the identification, MS-MS can be used. As was mentioned above, this consists of identifying the characteristic ion (MS) and then applying the fragmentation to this ion to break this fragment. The breakage of each fragment is specific and is of great help to identify the compounds. Triple quadrupole instruments in which the first fragments (parent ions) obtained in the first quadrupole goes through the second quadrupole in which a gas, usually argon, enters and crash into the fragments, causing the second fragmentation (daughters) of each ion, which are analyzed in the third quadrupole. These systems are also available in LC-MS and are useful for identification purposes, although the sensitivity using the triple quadrupole is lower than that obtained when using only the first quadrupole.

Recently double-dimension chromatography has been developed. This is a new hyphenated technique in which two different chromatographic separations using two columns of different polarity and different size each, connected in series, are applied to the same sample. Usually, the first column is of normal size, for example 30 m in GC, and the second one is short, about 1.5 m. The final detection can be FID or even better the MS or its different MS options. This double dimension can be also used in liquid chromatography. In this case, the use of for example a size exclusion column as the first one to eliminate the polymers, proteins, or in general the macromolecular

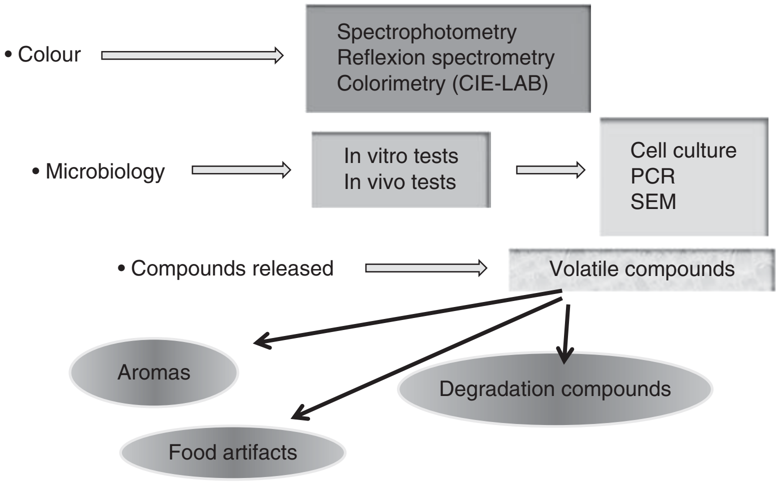

Figure 4. Testing the food.

compounds, and a reverse phase (C18 or similar) as second dimension can be a good alternative for analyzing in one single run the compounds of interest without the interferences from the matrix (34).

A different approach from chromatography is electrophoresis, where the compounds are separated based on the application of an electric field. Then, the ionic compounds move through the liquid solvent according to their mass and their charge. Although gel electrophoresis is old and novery sensitive, the new capillary electrophoresis (CE) has been shown as a good technique for ionic organic molecules, such as drugs, proteins, amino acids, and so on, as these compounds can be easily transformed into ionic ones just controlling the pH. This technique can be also used in shelf-life studies, but its frequency is not as high as the chromatographic techniques. The new hyphenated technique CE-MS can be one alternative in future studies.

OTHER ANALYTICAL PROCEDURES

Figures 4, 5, and 6 summarize the most common techniques for shelf-life studies. Besides the analytical techniques mentioned above, the optical techniques, such as UV-Vis spectrophotometry or infrarred spectrometry (IR) are useful. The former is used to measure the color and color changes (VIS) occurred in the food or in the packaging materials either in absorption or in reflexion modes. The latter (IR) is used to identify the packaging materials or organic components. The most recent advances in near infrared (NIR) allow also to quantify some components in not complex samples, mainly in packaging materials more than in food.

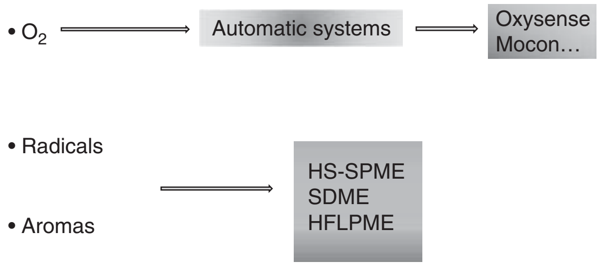

Figure 5. Testing the internal atmosphere.

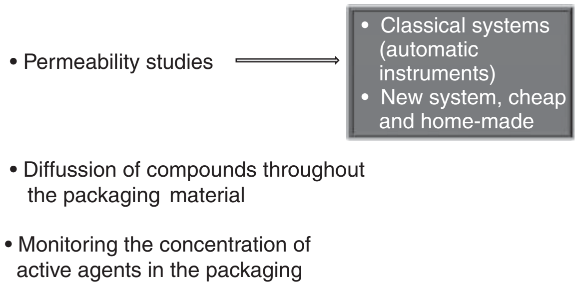

Figure 6. Testing the packaging.

Also, the combination of different techniques provide an useful an important information in the shelf-life studies (35) and can be observed as a powerful tool for having as much information as possible about the state of the packaging material, the food inside the packaging, and the internal atmosphere between them.

BIBLIOGRAPHY

1. C. Nerin, *Analy. Bioanalyt. Chemi.* **388**, 1001 (2007).
2. C. L. Arthur and J. Pawliszyn, *Anayti. Chem.* **62**, 2145 (1990).
3. R. Batlle, C. Sanchez, and C. Nerin, *J. AOAC Int.* **84**, 431 (2001).
4. C. Nerin, M. R. Philo, J. Salafranca, and L. Castle, *J. Chromatogr. A* **963**, 375 (2002).
5. C. Nerín, E. Contín, and E. Asensio, *Analyt. Bioanalyt. Chem.* **387**, 2283–2288, (2007).
6. L. Pillonel, J. O. Bossett, and R. Tabacchi, *Lebens. Wiss. Technol.* **35**, 1 (2002).
7. W. Wardencki, M. Michulec, and J. Curylo, *Int. J. Food Sci. Technol.* **39**, 703 (2004).
8. A. K. Malik, V. Kaur, and N. Verma, *Talanta* **68**, 842 (2006).
9. J. B. Quintana and I. Rodriguez, *Analyt. Bioanalyt. Chem.* **384**, 1447 (2006).
10. F. Pragst, *Analyt. Bioanalyt. Chem.* **388**, 1393 (2007).

11. G. Ouyang and J. Pawliszyn, *Analyt. Bioanalyt. Chem.* **386**, 1059 (2006).
12. J. S. Aulakh, A. K. Malik, V. Kaur, and P. Schmitt-Kopplin, *Crit. Revi. Analyt. Chem.* **35**, 71 (2005).
13. C. Bicchi, C. Cordero, E. Liberto, B. Sgorbini, and P. Rubiolo, *J. Chromatogr. A* **1184**, 220 (2008).
14. H. Kataoka, H. L. Lord, and J. Pawliszyn, *Encyclopedia of Separation Science*, Academic Press, London, UK, 2000.
15. J. Pawliszyn, *Solid Phase Microextraction: Theory and Practice*, Wiley VCH, New York, 1997.
16. J. Pawliszyn, *Applications of Solid Phase Microextraction*, Royal Society of Analytical Chemistry, Cambridge, UK, 1999.
17. H. H. Liu and P. K. Dasgupta, *Analyt. Chem.* **68**, 1817 (1996).
18. M. A. Jeannot and F. F. Cantwell, *Analyt. Chem.* **68**, 2236 (1996).
19. M. A. Jeannot and F. F. Cantwell, *Analyt. Chem.* **69**, 2935 (1997).
20. Y. He H. K. Lee, *Analyt. Chemi.* **69** 4634 (1997).
21. R. Batlle and C. Nerín. *J. Chromatog. A* **1045**, 29–35 (2004).
22. D. A. Lambropoulou and T. A. Albanis, *J. Biochem. Biophys. Met.* **70**, (2007) 195.
23. D. A. Lambropoulou, I. K. Konstantinou, and T. A. Albanis, *J. Chromatog. A* **1152**, 70 (2007).
24. E. Psillakis and N. Kalogerakis, *Trends and Analyt.l Chem.* **21**, 53 (2002).
25. C. Nerín, J. Salafranca, M. Aznar, and R. Batlle, *Analyt. Bioanalyt. Chem.* 2008.
26. J. Romero, P. Lopez, C. R. R. Batlle, and C. Nerin, *J. Chromatog. A* **1166**, 24 (2007).
27. D. Pezo, J. Salafranca, and C. Nerin, *J. Chromatog. A* **1174**, 85 (2007).
28. S. Pedersen-Bjergaard and K. E. Rasmussen, *J. Chromatog. B* **817**, 3 (2005).
29. S. Pedersen-Bjergaard, K. E. Rasmussen, and G. A. Mills, *Trends Analyt. Chem.* **26**, 843 (2007).
30. S. Pedersen-Bjergaard and K. E. Rasmussen, *J. Chromatog. A* **1184**, 132 (2008).
31. C. Nerín, C. Rubio, J. Cacho, and J. Salafranca. *Chromatographia* **41**(3/4), 216–220 (1995).
32. C. Nerín, C. Rubio, J. Cacho, and J. Salafranca. *Food Additives Contami.* **15**(3), 346–354 (1998).
33. K. Bentayeb, R. Batlle, J. Romero, and C. Nerín, *Analyt. Bioanalyt. Chem.* **388**, 1031–1038 (2007).
34. C. Nerín, J. Salafranca, J. Cacho, and C. Rubio, *J. Chromatog. A* **690**, 230–236 (1994).
35. R. Becerril, R. Gómez-Lus, P. Goñi, P. López, and C. Nerín, *Analyt. Bioanalyt. Chem*, **388**, 1003–1011 (2007).

ANTI-COUNTERFEITING PACKAGING

STEVE WERBLOW
Steve Werblow Communications
Ashland, OR

Counterfeiting is a huge business, threatening not only sales revenue, but also the health and safety of consumers who may end up with adulterated food or medicine, unsafe engine parts, or other dangerous fake goods. Liability for those counterfeit products, as well as the negative publicity that can befall a company whose brand has been compromised by piracy, can have devastating impacts on business.

In the United States, the Brand Protection Alliance asserts that counterfeiting and piracy cost the U.S. economy \$200 to \$250 billion per year. The Organization for Economic Co-Operation and Development in Europe calculated that international trade alone in counterfeit goods represented an additional \$200 billion in 2005; the International Chamber of Commerce (ICC) estimates the total counterfeit economy at more than three times that amount. In fact, in the middle of the first decade of the new millenium, ICC figured the counterfeiting industry represented about 10% of world trade, equivalent to the 12th largest economy in the world.

Counterfeit products range from cheap bootleg videos to phony bottles of wine sold for thousands of dollars to fake aircraft parts.

Fortunately, label and packaging technology can help deter or thwart counterfeiters. Printing techniques, materials such as substrates and inks, and high-tech sensors can all play a role in protecting brand integrity.

OVERT AND COVERT

The first decision to make in an effort to protect a brand from counterfeiting is to determine whether the effort should be visible or invisible to the counterfeiter.

A highly visible, or overt, tactic can warn off potential counterfeiters, much as a flashing alarm light does in an expensive car. An adept thief could break into the vehicle and disable the alarm, but is more likely to consider saving the time and hassle by moving on to an unprotected vehicle.

Overt measures can also communicate to consumers. It may put them on guard against counterfeit products. It may reinforce a sales message that says, in essence, “this product is so desirable, people want to counterfeit it.” And it may also reassure customers that the product they are buying is well protected.

By contrast, covert measures tend to be secret and unobtrusive, generally revealed only through close observation or with special readers or detectors. The theory behind covert tactics is often that if counterfeiters do not know what the authentication features are, they are less likely to fake them.

Many anti-counterfeiting efforts rely on a combination of overt and covert methods. It’s like protecting your home with a good lock, a loud dog, and a burglar alarm.

TACTICS AND MATERIALS

The U.S. \$20 bill introduced in 1998 illustrates the use of a variety of anti-counterfeiting features, all of which may be employed in the manufacture of labels and packaging. Rare paper, embedded fibers and strips, watermarks, sophisticated printing, special inks—each feature makes the bill difficult to reproduce and easy to authenticate.

Special Paper

The U.S. currency anti-counterfeiting effort begins with cotton/linen paper manufactured specifically for the U.S. Bureau of Engraving and Printing for the production of currency. A swipe with an iodine pen is an easy authentication measure: Unlike wood-based paper, which contain starches that turn black in the presence of iodine, the linen/cotton blend will not show a dark line where the pen left its mark.

In addition to its unique composition, the banknote paper includes embedded red and blue fibers, so average paper stocks cannot be substituted for the real thing.

Papers with embedded fibers or planchettes—inclusions that look like confetti or tiny dots—are widely available as label stocks. Even the use of expensive or unusual substrates, such as textured stock or parchment, may serve as a mild deterrent to counterfeiters.

Watermarks

Watermarks are a classic anti-counterfeiting feature found in the U.S. notes as well as currency and other important documents around the world. A watermark is created during the manufacture of the paper: While the paper is still wet, it is pressed with a cylinder roll bearing an image in relief. The raised areas on the roll compress fibers in the paper, making the paper thinner in those areas. Thinner paper transmits more light, allowing the watermark to “appear” when light is shined through the note.

Embossing

Embossing a document, label, or package—creating a raised figure or pattern on the surface using a die, heat, or varnish—can be used to deter counterfeiters. Embossing and texture are increasingly important as scanners and printers improve. Though new imaging technologies are better than ever at reproducing color and print quality, they cannot reproduce the texture of an embossed surface.

Reactive Inks

Inks formulated to react to stimuli by changing color challenge counterfeiters and can be relatively easy for consumers to recognize. The $20 bill features an optically variable ink (OVI) that appears to shift from green to black as light hits it from different angles. Thermochromatic inks, which change color in response to changes in temperature, can be activated when a shopper puts her thumb on a label. Other inks may fluoresce in the presence of ultraviolet (UV) light or change colors when exposed to specific chemicals.

Inks with highly specific spectral signatures can be authenticated with photospectrometers, even when they appear no different from counterfeiters’ inks to the naked eye. Inks provide a good illustration of the difference between overt and covert technology. Thermochromatic inks are overt—the authenticating feature can easily be seen by the public. Measuring the photospectral signature of an ink requires a specialized reader and the knowledge that the feature is included in the package, making it a covert technology.

Taggants

Inks may also be impregnated with taggants, microscopic markers that can be detected with various decoders. For instance, a microscope can reveal cell-sized particles that feature a company’s logo. A hand-held reader wand can detect specific reflection, refraction or electromagnetic properties of taggants in ink. One Australian wine producer even blended DNA from a grape vine into its label ink as a very unique taggant.

Printing Techniques

High-quality printing is a classic anti-counterfeiting measure. Microprinting, or the creation of extremely tiny characters such as the words “United States of America” around Andrew Jackson’s portrait on the U.S. $20 bill, cannot be readily achieved by most small printers or replicated on inkjets in a home counterfeiting operation. Similarly, printing elaborate scrollwork and other ultrafine geometric patterns—called guilloche printing—can challenge counterfeiters. Some anti-counterfeiting companies offer sophisticated guilloche patterns that reveal a signal word, such as “VOID,” if a protected document is photocopied. Digital “watermarks” can be embedded in graphics and detected by scanners.

Holograms

A technology that got its start in the 1940s, holograms have long been used to authenticate valuable items such as credit cards, electronic parts, software, and even clothing.

There are two types of holograms. Surface-relief, or rainbow transmission, holograms are the familiar rainbow-colored images that are common in packaging because of their low cost and minimal thickness. Surface-relief holograms are embossed onto thermoplastic film backed with aluminum. Lippmann holograms—created by capturing wave interference patterns on special photographic materials—offer the illusion of greater depth and clarity, are more difficult to produce, and can include multiple frames, microprinting, and extremely fine details that can aid in authentication.

Holograms are interesting and attractive enough to capture the eye of consumers, which offers some overt brand protection, but the relative ease of counterfeiting surface-relief holograms themselves mean that the most effective security features on a good hologram are more covert.

A variant on holograms, latent image technology, uses a polarizer to reveal a very sharp, difficult-to-counterfeit image.

Electronic Tags

Integrated circuit (IC) and radio-frequency identification (RFID) technologies are catapulting anti-counterfeiting efforts to a new level. Tiny printed circuits can be affixed to labels and packages to carry significant amounts of information. Active RFID chips draw power from built-in batteries to send a signal many meters; as battery technology becomes increasingly miniaturized and inexpensive, active RFID will find many new uses in packaging. Passive RFID chips do not require a power source—a radio query from an electronic reader provides enough energy to allow the chip to report its data—so they can be extremely small, thin and inexpensive. Users may write new information to IC tags, adding flexibility.

TAMPER EVIDENT FEATURES

Rather than try to reproduce a package, some counterfeiters use a brand's genuine packaging and refill it or adulterate the ingredients. Any tampering with a package represents a significant threat to both the brand and the consumer, so anti-tampering features can be extremely important elements of a brand protection campaign.

From the days of sealing wax, signet rings and signatures across the folds of an envelope, tamper-evident features have been employed. In many ways, the principles remain the same as they have been for centuries.

Induction Sealing

The familiar foil seals under the lids of products from pain reliever to peanut butter utilize a technology called induction sealing. A laminate consisting of a foil and polymer on a paper backing is placed across the top of a plastic or glass container. Passing the container and lidding material under an electrical induction coil causes the foil layer to heat up in response to the electromagnetic energy supplied by the coil. The foil is released from the backing, and the polymer (heated by the aluminum) fuses with the lip of the container. The result is a tight seal. Any attempt to access the contents of the container is immediately apparent in the form of a torn or missing seal. Many induction seals are designed to leave a residue on the lip of the container, showing that the laminate has been removed.

Tamper-Evident Films

Many polymer materials are employed as heat-sealed wraps or capsules over lids to provide evidence of tampering. The materials are typically quite durable, but are prone to ragged tearing or shattering when someone applies force to them or attempts to slip them off of the package. Many tamper-evident films also include holograms or other anti-counterfeiting features to establish authenticity and to ensure that they are not replaced with a simpler shrink film after the package has been opened.

Tamper-Evident Labels

Some pressure-sensitive labels include a layer that remains firmly adhered to the product, leaving behind adhesive residue or displaying a message such as "void" if the label has been removed. Other labels are constructed with perforations or built-in weak points to prevent their intact removal. (This is often seen with price tags, which are difficult to remove intact and move to a more expensive product. The same benefits apply when preventing the movement of wine or pharmaceutical labels to unauthorized packages.)

RFID Chips

Radio-frequency identification (RFID) chips are playing an increasing role in tamper protection. Active RFID chips, which include a power supply, can sound a radio-frequency distress call, including specific product or package information, if they have been tampered with. Passive RFID chips, which respond to electronic queries from readers, may provide evidence of tampering when they are deployed on destructible labels—tampering destroys the antenna, so the chip's non-performance can serve as a warning that tampering has taken place.

BIBLIOGRAPHY

1. *The Economic Impact of Counterfeiting and Piracy*, Organization for Economic Co-Operation and Development, Paris (2008).
2. B. Jones, "First Line of Defense," *Manufacturing Today Europe* (April–May 2007).
3. M. Noach and E. Feder, The Tadbik Group, personal communication (2008).
4. U.S. Department of the Treasury, "U.S. Treasury and Federal Reserve Issue a New $20 Bill" (May 20, 1998).
5. Web site www.UsingRFID.com.
6. Web site of the BP Council (www.bpcouncil.org).

ANTI-FOG COATING

Craig D. Boyd
Sun Chemical

One of the main purposes of a package is to facilitate consumers to repeatedly purchase the product that it contains. Inks and coatings are continually expected to have a higher contribution to the overall performance and/or aesthetics of the package. There is possibly no coating that offers a more significant effect on the consumers' acceptance of a package than the anti-fog coating.

CONDENSATION PROBLEMS DEFINED

Whenever a sealed high-humidity environment is placed through a temperature gradient, moisture condensation will occur. This condensation will materialize as small beads of water droplets forming on the inside of the package. The droplets will begin to vaporize and then form a fog on the inside of the package and transform a clear package into an opaque one and thus conceal the contents from the consumer. Most manufactures want the consumer to see their product. This is normally achieved either by packaging the product in a clear film or by printing a pictorial of the product on the outside of the package. Therefore, it is obvious that when a manufacturer packages a product in a clear package, they expect that it will remain clear. The produce manufacturer wants the consumers to see the multicolor mixture of the green lettuce, orange carrots, red cabbage, and radishes.

CONVENIENT, HEALTHY EATING

In order to attract more consumers, produce manufactures are marketing the convenience of prewashed produce. These packages are an attractive way of quickly preparing a healthy meal. Today, there are literally dozens of different salad and vegetable blends sold in the produce department in the grocery store. These packages are sealed in a plastic bag and the produce contains a relatively large amount of moisture.

REFRIGERATION UNIT TYPES

There are two different classification of refrigeration units used in the produce section of the grocery store. They are either vertical or horizontal. Because cold air is denser than warm air, the horizontal refrigeration units allow for the entire package to maintain a consistent temperature and therefore will not produce a great amount of condensation. The main drawback of the horizontal unit is that it conceals the packages from consumers as they navigate through the produce section. Because of this, the horizontal unit is not used very often any more. The vertical unit, when positioned properly in the store, can allow consumers to see products from virtually across the produce section of the store. The largest problem with the vertical unit is that it allows the refrigerated package to be in direct contact with the warm ambient air in the store. This configuration is a perfect design to allow the outside of the package, the side facing the consumer, to be exposed to a rather drastic temperature gradient. Thus vertical units create a perfect environment for the generation of a great amount of moisture condensation. In the vertical refrigeration unit, only the most outside package will experience condensation. Therefore, the greater the popularity of the product, the less time any one package will set on the outside of the unit. Ironically, the less popular the product, the more the package will require an anti-fog coating.

PRODUCE PACKAGE TYPES

Produce packages fall into two different categories. First is the “pillow” pouch. These pouches are made from soft, subtle films that will contain loose packaged produce. This is the most popular package for produce. Lettuce and cole slaw blends as well as baby carrots and small pieces of vegetables such as broccoli flowerets are usually packaged in the pillow pouch. These pouches have very little rigidity and thus the package will contain many wrinkles to allow for the water droplets to collect. The second type of produce packages are vertical stand-up packages. These vertical packages are made from very rigid films and will not allow any wrinkles to form. These packages usually contain more rigid produce like romaine lettuce or celery stalks. In order to work properly, these packages will utilize different types of anti-fog coatings. The rigid packages will be printed with an anti-fog that will cause the condensation to bead up and then gravity will draw the water beads to the bottom the pouch where they will do no harm. The pillow pouch will use an anti-fog that will allow the water vapor to easily wet out the wrapper. This way the moisture will not gather and will not create any fogging. This type of anti-fog is required for the pillow pouch because the wrinkles will cause the water beads to gather and will eventually cause fogging. The coatings for rigid pouches are designed to produce a dried coating that will have a very low surface energy, while the coatings for the pillow pouches are designed to have a very high surface energy.

NOT JUST PRODUCE PACKAGING

Anti-fog coatings are used not only in produce packaging, but often also in raw and prepared meat and poultry packaging. For example, meat may be packaged in rigid trays using modified atmosphere packaging (MAP), where the trays are flushed with an optimum composition of O_2/N_2 and then sealed with a shrink film. These packages allow a greatly increased shelf life when compared to the old-fashioned meat wrappers. However, these packages can easily experience condensation and will often need an anti-fog coating on the inside of the shrink film. Preprepared meats have become very popular at grocery stores. Rotisserie chickens are available at most grocery stores. These chickens are placed in an opaque rigid tray and then covered with a clear rigid bubble. The inside of the clear bubble will often contain an anti-fog coating.

NOT ALL REFRIGERATED PACKAGES REQUIRE ANTI-FOG COATINGS

Any package where the film is in direct contact with the product does not require an anti-fog coating no matter how much moisture the package contains. When the film is in direct contact with the product, no matter how the structure of the refrigeration unit, there is no area of air space that will allow the formation of condensation. For example, an unwashed head of lettuce with a film that is tightly wrapped around the lettuce will never experience condensation and therefore will not require the use of an anti-fog coating. Another example of a package that will not contain an anti-fog coatings are meat wrappers that are in direct contact with the meat. For example, the old-fashioned styrofoam meat trays that are tightly wrapped with a flexible film do not require an anti-fog coating.

ANTI-FOG COATING APPLICATIONS AND FORMULATIONS

Since anti-fog coatings are designed to deter condensation formation on the inside of the package, these coatings are always applied to the inside of the wrapper. Therefore, all anti-fogs at a minimum have two things in common. They must be FDA compliant for direct food contact and must be designed to print and adhere to the untreated side of the film. Since the inks are applied to outside of the film, the treated side is always on the outside of the package. These coatings are normally applied with at a very low coating weight, resulting in a very thin film of <1μm. Anti-fog coatings are tested for smudge resistance, block resistance, and offset (transferring to the back side of the film) resistance.

Some anti-fog coatings will affect packaging seal bond strengths, while other will not. The coatings that do interfere with seal bonds must be patterned out of the heat seal areas. Anti-fog coatings can be difficult to reach correct register because they are absolutely clear. Therefore, the coatings that do not interfere with heat seal bonds are more popular. The problem with these coatings is that they are much more prone to offsetting, so achieving the correct film weight is essential with either coating. Excessive coating applications can greatly interfere with heat seals, while a lack of coating will not allow the coating to reach its anti-fog potential.

Anti-fog coatings for flexible films are normally applied using the flexographic process; coatings for rigid dome lids for the precooked poultry are normally spray applied.

CONCLUSION AND REVIEW

Some flexible substrates are manufactured with anti-fog agents added to them. These films will only provide marginal anti-fog properties because the active agents are diffused throughout the entire thickness of the film, while the coatings are concentrated on the surface. Therefore, the use of anti-fog coatings are typically required for high-performance applications.

There is far more to anti-fog coatings than immediately meets the eye. Whether a package receives an anti-fog coating is always the decision of the manufacturer. This decision is based on the type of the product, the type of refrigeration unit, and the turnaround time of the product. The requirements for the correct type of anti-fog are mostly dependent on the type of product and package. The purpose of anti-fog coating is to allow the clear film to remain clear so that the consumer can easily see the colorful and wholesome product that the package contains. The main use of anti-fog coatings is a matter of manufacturers wanting to increase market share and product differentiation.

ANTIMICROBIAL PACKAGING

S. Y. Cho
Institute of Life Sciences and Biotechnology, Korea University, Seoul, Korea
D. S. Lee
Department of Food Science and Biotechnology, Kyungnam University, Masan, Korea
J. H. Han
PepsiCo Fruit and Vegetable Research Center, Frito-Lay Inc., Plano, Texas

INTRODUCTION

In the past, the functions of packaging had been limited to the roles of containment, protection of its content from environmental effects, consumer convenience, and communication of the product information. While the conventional functions of packaging was considered as passive, the new paradigm of packaging—called *active packaging*—has been emerged. The active packaging may be defined as a packaging system in which the product, the packaging, and the environment interact in a positive way to extend shelf-life or to achieve some characteristics that cannot be obtained otherwise (1). Antimicrobial packaging is a form of active packaging that can control the growth of microorganisms on the surfaces of foods and packaging materials and eventually reduce cell counts in the products.

Antimicrobial function of packaging materials can be achieved by providing unfavorable environmental conditions to microorganisms by eliminating growth requirements, rendering direct contact of microorganisms to the immobilized antimicrobials on the packaging material surface, or transferring antimicrobial agents originally incorporated into the packaging materials. With the above actions, antimicrobial packaging extends the shelf life of food and secure consumer safety by controlling spoilage and pathogenic microorganisms in foods.

According to the Flexible Packaging Association (2), the market size of flexible packaging in the United States in 2007 is about $23,500 million, garnering 18% $130,000 million packaging market. The largest market for flexible packaging is food industry (retail and institutional) accounting for over 57% of shipment. Active role of food packaging has been empathized for sustainable development of food packaging industry. Antimicrobial packaging would make the food packaging industry possible to achieve an innovative development with the aid of regulatory requirements such as food product liability and HACCP. Therefore, research and development trends of antimicrobial packaging systems may progress to achieving more effective antimicrobial activity with broader spectrum, utilizing natural extracts and creating new applications.

A BRIEF HISTORY OF ANTIMICROBIAL PACKAGING

Early Works on Antimicrobial Packaging

As an early stage application of antimicrobial packaging, shelf-life extension of perishable product had been achieved by applying modified atmosphere packaging (MAP) technologies that provided adverse environments of microbial growth. MAP eliminates oxygen level and elevates the concentration of carbon dioxide to inhibit the growth of aerobic microorganisms.

The antimicrobial polymeric materials were first introduced to protect biomedical devices from microbial contamination in Japan (1). A considerable progress in antimicrobial packaging technology has been made in 1990s, and various antimicrobial products was developed and commercialized in household goods, textiles, surgical implants, biomedical devices, and food packaging materials. The progress could be attributed to the development of inherently antimicrobial polymers and also to the development of antimicrobial agent that was incorporated into polymer matrix. For example, chitosan-based polymers and copolymerized acrylic with protonated amine co-monomer have been developed as antimicrobial packaging materials (3). Preservatives with antimicrobial activity play an important role in preventing microbial contamination. Many of these agents such as silver substituted zeolite, potassium sorbates, sodium benzoate, propionic acid, and acetic acid have been successfully incorporated directly into packaging materials to control the microbial contamination (4, 5).

Current Works on Antimicrobial Packaging

The use of chemical preservatives as antimicrobial agents caused public concerns on the potential risks of chemical preservatives that might migrate into food products. These agents are categorized as food additives and controlled by legislation.

Although the chemical preservatives in packaging materials had been carefully regulated by domestic authorities, the increased consumer demand for preservative free foods has rendered the development of antimicrobial packaging with natural antimicrobial agents. The natural antimicrobials and GRAS antimicrobials may include bacteriocins, enzymes, plant extracts, and natural essential oils (5, 6). They hold a great potential and represent excellent activities for controlling microbial contamination. With the effort of finding safe antimicrobial agents, considerable studies have been exerted on developing antimicrobial biopolymer matrix as a carrier for natural antimicrobial agents (6).

ANTIMICROBIAL PACKAGING SYSTEM

Antimicrobial packaging is a system that is designed to control the growth of microorganisms by extending the microbial lag phase and by reducing the growth rate, thereby extending the shelf life of perishable products and enhance the safety of packaged products (4). Antimicrobial packaging can be constructed using antimicrobial packaging materials and/or antimicrobial agents.

Antimicrobial packaging systems can be classified into three types according to the mode of antimicrobial agent's action: absorption, release, and immobilization (5). The first type is the packaging materials containing antimicrobial agents that eliminate oxygen and moisture in the packaging system by absorption. This type of packaging controls the growth of microorganisms by providing unfavorable conditions to cell growth. The second is the packaging materials containing antimicrobial agents that migrate to the surface of food materials. The antimicrobial action is achieved by the release of the antimicrobial agents from the packaging material. The third type is those containing antimicrobial agents without migration. This type of packaging needs direct contacts between packaging materials and food product since the antimicrobial agents in the packaging material does not release into foods.

The antimicrobial agents may be coated, incorporated, immobilized, or surface modified onto the packaging materials according to the characteristics of the antimicrobials and to the antimicrobial mechanisms how the agents are working (6). Thermal polymer processing methods such as extrusion and injection molding are used for heat-stable antimicrobial agents like silver substituted zeolites. Meanwhile, solvent compounding methods may be a more suitable method to combine the antimicrobial agents and the packaging materials for heat-sensitive antimicrobials such as enzymes and volatile compounds (7).

Antimicrobial Packaging Containing Oxygen Absorbing Agent

Modified atmosphere packaging (MAP) with the absence of oxygen along with elevated concentration of carbon dioxide has been used for controlling the aerobic microorganisms that are responsible for food spoilage. Generally, oxygen concentrations of 0.1% v/v or less in package headspace are required to inhibit the growth of aerobes (1). However, MAP does not guarantee this anaerobic condition in the packaging system throughout the shelf life since the flexible packaging materials show considerable gas permeabilities. Introduction of oxygen absorbing agent in the packaging system rendered active control of oxygen level in the package headspace suitable for antimicrobial purpose by removing oxygen molecules.

In general, oxygen scavenging technologies are constructed by the oxidation of oxygen absorbing agents: iron powder, ascorbic acid, photosensitive dyes, enzymes (e.g., glucose oxidase and alcohol oxidase), unsaturated fatty acids (e.g., oleic acid or linoleic acid), and immobilized yeast on a solid substrate (8). Iron-based material is known to the most effective oxygen scavenging system among the above substances. It has been reported that 1 g of iron will react with 300 ml of oxygen (8). The oxygen-absorbing antimicrobial packaging has been successfully commercialized in bakery, pasta, and meat products by applying the agents enclosed in sachets or incorporated in polymer matrix. Recently, diversified matrices for oxygen absorbents are available in film, tray, label, and closure liner as well as sachet (8). In spite of the strong antimicrobial activity of the oxygen scavenging system against aerobic microorganisms, this system does not possess the effective activity against anaerobic microorganisms.

Antimicrobial Packaging Containing Antimicrobial Agent that Migrate into Food

The packaging materials may act as a carrier for antimicrobial agents to perform their active role to control microorganisms. Some of the antimicrobial agents may be coated or directly incorporated into the packaging materials and subsequently migrate to the food system. The antimicrobial action is achieved by release of the antimicrobial agents from the packaging material. The released antimicrobial agents control the growth of microorganisms by altering cell membrane properties or by inhibiting essential metabolic pathways of the microorganisms (4–6).

Most spoilage incidents occur primarily at food surface by the contamination of aerobic microorganisms. The concentration of the antimicrobial agents above their minimal inhibitory concentration (MIC) is required to impart antimicrobial function. Without the antimicrobial packaging concept, the excess amount of preservatives such as benzoates and sorbates should be included in foods to control the spoilage microorganisms. Thus, releasing antimicrobial additives to the food surface conveniently increases the additives concentration in the food surface above the MIC while maintains the preservative concentration inside the food at sufficiently low level (4). Considering that the use of preservatives for shelf-life extension has been strictly controlled by food safety authorities, antimicrobial packaging is advantageous in reducing potential risks of consuming excess amount of food preservatives.

An additional advantage of antimicrobial packaging is the sustainable antimicrobial activity. The antimicrobial agents initially included in food ingredients might be inactivated by interacting with other food components. For example, bacteriocins and enzymatic antimicrobial agent applied in the foods or onto the food surface may interact with proteolytic enzymes in food and may cause the loss of antimicrobial activities. On the contrary, incorporation of the above substances in packaging films did not cause the loss of antimicrobial activity, controlled the release of the antimicrobial agents, and maintained antimicrobial activity for fairly long periods.

Nonvolatile Migration. The incorporated antimicrobials are migrated to the food surface in either solute or gas states. The migrating solutes are nonvolatile materials such as organic acids and their salts, enzymes, bacteriocins, fungicides and some of natural extracts, while the gases are volatiles such as alcohols, small phenolics, aldehydes, and others (4–6, 8). They moved from the film matrix to the food surface and diffused or dissolved into the food. Diffusion is a primary mechanism of nonvolatile solute transfer in the film matrix, in which relates to the release rate. The migration kinetics of nonvolatile solute followed the Fick's second law of diffusion, where diffusion coefficient depends on the type of film materials, microstructural voids in film matrix, and environmental temperature (9, 10). The migration of the antimicrobial agents in the film to the food surface requires directly contact. The contact between the film matrix and the food surface throughout the shelf life should be assured for their migration and, consequently, their antimicrobial action. For this, the food should be a continuous matrix without any factors that interfere with the diffusional migration. This food matrix could be a liquid solution, a semisolid paste, or a smooth solid matrix without significant pores, holes, or heterogeneous particles. The antimicrobial agents in the food surface will move into the center of the food by diffusion or dissolution. The solubility and diffusion coefficients of the agent in the food are very important factors that govern the rate of agent removal in the food surface. The antimicrobial concentration in the food surface could be maintained above the MIC for their effectiveness in controlling the microbial growth when the agent transfer in the food and films are balanced (5).

Volatile Migration. The migrating antimicrobials could be gaseous compounds released from a gas emitting material. The gaseous antimicrobials can be migrated into the food surface and its packaging headspace or into the air gap between the package and the solid food (4).

The migrating volatile gases include SO_2, ethanol, essential oils, and a component of natural herb and spice extracts. The advantage of using volatile antimicrobial agents is that the packaging film does not need to contact directly to the food surface. Therefore, food matrix in this system could be highly porous foods, powdered foods, particulate foods, or shredded and irregularly shaped foods. Sometimes, however, the use of volatile antimicrobial is limited by the incompatibility of the agent with the packaging materials, or by the loss of volatile antimicrobials during incorporation into packaging by extrusion or coating (5).

The volatile antimicrobial agent initially incorporated in the packaging film or sachet material is transferred to the film surface and subsequently evaporated to the packaging headspace. The vaporized agent in the headspace is then absorbed to the food surface. Eventually, the agent concentration in the food surface is equilibrated with the volatilized antimicrobials in the headspace (4). For the antimicrobial efficacy of the agent, the agent concentration in the food surface should be maintained above the MIC of target microorganisms. The concentration of migrated agent in the food surface is determined by the release rate of the volatile agent from the packaging material and by the absorption rate of headspace volatile agents into the food. The release rate of the agent from the packaging material to the headspace depends on the volatility of the agent which represents the partitioning behavior between packaging material and headspace. The absorption rate of the agent into food depends on the solubility of the agent into the food ingredient. Therefore, the composition of the food is a very important factor of the agent's solubility to the food materials. In general, the volatile agents are more soluble in lipid foods than in hydrophilic food materials.

The desired antimicrobial concentration of a food surface can be attained by controlling the release rate of antimicrobial agent from the packaging material surface. When we use an appropriately selected film layer that has a specific permeability of the volatile substance, the antimicrobial's release rate could be controlled efficiently. The microencapsulation of the volatile substance with appropriate wall materials may control the release of antimicrobials. This encapsulation method can also provide a solution against the loss of volatile antimicrobials during packaging material fabrication processes.

Antimicrobial Packaging without Antimicrobial Agent Migration

Antimicrobial packaging can also use agents that are not migrated into the food. The nonmigrating antimicrobial packaging system can be achieved using inherently bioactive polymers or developing novel packaging materials where the antimicrobials are attached to the nonactive films by either covalent bond or ionic immobilizations (4). In this antimicrobial packaging system, many antimicrobials are enzymes or chemicals that are directly and indirectly participated in the microbial inactivation function. They participate in the biological reactions that lead to the microbial inactivation or produce biologically active radicals, ions, and reactive singlet oxygen that may induce antimicrobial effects.

Since the biologically active compounds are not mobile, the incorporation of the antimicrobials in the matrix during film fabrication processes is not considered necessary. Although the incorporated antimicrobials uniformly distributed in the film matrix, their activity is limited to the film surface only. Therefore, imparting a biologically active ingredient to the film surface would be sufficient to exhibit the antimicrobial efficacy of the nonmigrating antimicrobial packaging film. Therefore, assigning an antimicrobial activity without migration of antimicrobials can be performed by immobilizing nonmigrating antimicrobials on the polymer film surface, by coating a very thin layer of active matrix on to the packaging film, or by attaching antimicrobial compounds covalently on the film surface with the aid of multifunctional ligands (11).

The active materials in the film surface may catalyze antimicrobial action or provide sufficient energies to form ions and radicals on the food surface which are capable to control microbial growth. Therefore, this type of antimicrobial film is particularly effective for the packaging with liquid food and is advantageous for regulatory compliances. Since antimicrobial agents do not migrate into the food system, the antimicrobial agents that are not permitted as food ingredient and food additives may be used for this purpose as food contact substances.

Inherently Antimicrobial Packaging Materials. Some polymers are inherently antimicrobial, and they have been utilized in many fields currently such as biomedical instruments, filters, membranes, and packaging materials. Cationic polymers such as chitosan, poly L-lysine, lysozyme, and numerous synthetic polymers that have quaternary ammonium, phosphonium, and biguanide compounds have exhibited to be effective antimicrobial polymers.

It has been well known that chitosan (a natural polysaccharide), and its derivatives have an antimicrobial effect due to the presence of a positively charged ammonium group. Besides the natural antimicrobial polymers, antimicrobial synthetic polymers have been produced by polymerizing biologically active monomers. The widely used biologically active materials for synthetic polymers are the cationic compounds including quaternary ammonium compounds (QACs), biguanide groups, quaternary pyridinium compounds, phosphonium compounds, sulfonium compounds, and 2-(4′-thiazolyl) benzimidazol (TBZ) (Table 1). The functional groups are linked to reactive groups of monomers and, in turn, have been polymerized to form synthetic antimicrobial polymers (Figure 1). Therefore, most synthetic antimicrobial polymers can be understood as polymerized biocides, and the polymer backbone has the multiplied activity of the antimicrobial functions of attached biocides. Many of these polymers are amphiphilic and positively charged.

The antimicrobial action of polycationic compound has been considered as the disruption of cytoplasmic membrane of bacterial cell (13). Polycationic antimicrobial polymers are absorbed onto the negatively charged bacterial cell surface at physiological pH by electrostatic interaction. The absorbed polycations are bound to cytoplasmic membrane, and disrupt it. The consequent leakage of potassium ions and other cytoplasmic constituents lead to cell death. In particular, the mode of antimicrobial action of QACs is the damage of cytoplasmic membrane of bacteria through surfactant-like interaction resulting in the loss of permeability properties of the membrane (14). This means that the functional groups of the antimicrobial polymer must diffuse through the microbial cell wall, be water soluble, and have no interaction with the microbial cell wall. For this, spacer molecules that link the biologically active agents to the polymer backbone are required to allow the agent to have sufficient freedom of motion when the polymer backbone does not act as the spacer (11).

Physical modification of polymers often produces biologically active packaging films. Ultraviolet or electron beam irradiation on polyamide films increases positively charged amine concentration on the film's surface, resulting in enhanced cell adhesion potential. However, this type of film has limited microcidal effect, and microbial adsorption on the film surface diminishes antimicrobial activity. Incorporation of antimicrobial agents into this film matrix may overcome these drawbacks successfully (7).

Immobilized Antimicrobial Agents in the Packaging Film Matrix. The immobilized antimicrobial agents are not removed from polymer surfaces. Various immobilization techniques have been developed to overcome the contact problems of antimicrobial residues to food surfaces.

The antimicrobial materials used for immobilization include the hydrolysis product of a quaternary amine-containing organosilicon salt, hexachlorophene, acriflavine, antibiotics such as streptomycins and gentamycins, and antimicrobial enzymes including lactoferrin, sulfhydril oxidase, and bile-salt- stimulated lipase. The changes

Table 1. A List of Synthetic Antimicrobial Polymers with Their Active Compounds (12)

Active Compound	Biologically Active Polymer
Quaternary ammonium compounds (QACs)	Poly[{dimethylalkyl-3-(and -4-)vinylbenzyl}alkylammonium chlorides]
	Polyionenes (in-chain QAC of *p*-xylene spacer, in-chain QAC of hexamethylene spacer)
	Hydroxyterechelic polybutadienes carrying covalently-bonded QAC
	Polysiloxanes with pendant primary alcohol groups
Biguanide group	Poly(hexamethylene biguanide hydrochloride)s
	Polymer of methacrylate containing biguanide units
Quaternary pyridinium salt	4-[2,29-Bis(ethoxycarbonyl)ethyl]-1-alkylpyridinium bromide
	Poly[iminoethyleneimino-2-[(1-butyl)pyridine-4-ylmethyl]malonyliminoethyleneiminoadipoyl bromide]
Phosponium salt	Poly{trialkyl-3-[(and-4-)vinylbenzyl]phosphonium chloride}
	Poly([ethylenebis(diphenylphosphonio)]ethylene dibromide)
	Poly{[4-(2-tributylphosphonioethyl)styrene chloride]-co-4-(2-chloroethyl)styreme}
	Poly{[4-(3-tributylphosphoniopropyl)styrene chloride]-co-4-(3-chloropropyl)styreme}
Sulfonium salt	Poly[*p*-vinylbenzyltetramethlenesulfonium tetrafluoroborate]
2-(4′-Thiazolyl) benzimidazol (TBZ)	Poly[*N*-Acryloyl-2-(4′-thiazolyl)benzimidazol]
	Poly[2,4,4′-trichloro-2′-acryloyloxydiphenyl ether]

in conformation and denaturation of proteins and peptides may result in reduced antimicrobial activities of antimicrobial enzymes. The active site should be protected during the film formation.

INGREDIENT OF ANTIMICROBIAL PACKAGING

Film Matrix

The antimicrobial packaging system is comprised of film matrix and antimicrobial agents. In considering the biologically active role of the antimicrobial agent in the film, the relationships between the film matrix and the antimicrobial agent would be critical, since thermal degradation of the antimicrobial agent during film fabrication and its chemical compatibility with the film material may limit the antimicrobial activity. Synthetic polymeric packaging materials are produced by thermal processing method such as extrusion. Thermally stable antimicrobial agents should be incorporated. In general, synthetic flexible films consist of many layers of different films. Low-density polyethylene (LDPE) has been used for the film layer that is in direct contact with the food. Therefore, LDPE has been most widely used packaging materials among the synthetic polymers for antimicrobial agent carriers. For further modification of the contact film layer, poly(ethylene-co-methacrylic acid) (PEMA) has also been explored as a film matrix (15).

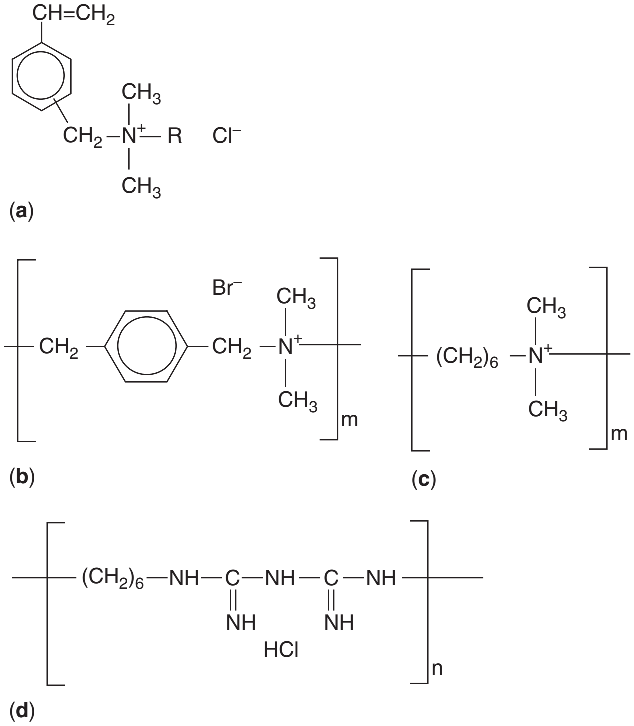

Figure 1. Monomers with antimicrobial activities. (**a**) Dimethylalkyl-3-(and -4-)vinylbenzyl ammonium chlorides, (**b** and **c**) polyionenes, and (**d**) poly(hexamethylene biguinide hydrochloride) (12).

Thermally unstable antimicrobial agents cannot be used with extruded synthetic polymer films, but they can be applied to the biopolymeric film matrix instead. In general, biopolymer films are formed by removing the solvent from the film solution in the cast plate. Therefore, they do not require high temperature for polymer melting. Examples of biopolymers are hydrocolloids including polysaccharide and protein, lipid, and the composite of hydrocolloid and lipid. For antimicrobial purposes, the use of biopolymeric films such as chitosan, soy protein, whey protein, corn zein, methyl cellulose (MC), and hydroxypropyl methyl cellulose (HPMC) films with various antimicrobial agents have been reported (16).

Antimicrobial Agent

The widely used method to inhibit the growth of undesirable microorganisms is the use of chemical agents exhibiting antimicrobial activity. These chemicals may be either synthetic compounds intentionally added to foods or naturally occurring, biologically derived substances. The selection of an antimicrobial agent depends primarily on its activity against the target microorganisms, compatibility with the packaging material, and the heat stability during the thermal process (4–6).

Currently, synthesized chemical preservatives have been widely employed to control the number of microorganisms in the packaged food, but increasing consumer awareness of potential health risk associated with the synthetic agent requires a substituent that is available in the nature. The natural antimicrobial agents such as bacteriocins and spice extract have long been used as constituents of foods and showed negligible toxicity. Therefore, natural antimicrobial agents are on the way of replacing the synthetic antimicrobial agents as food preservatives for direct deposition and also as ingredients of packaging materials for migration into food.

Organic Acid. Sorbic acid, benzoic acid, propionic acid, and their salts have been widely used for preventing microbial deterioration of food. They are on the food additive list in many countries and have been used under the control of regulation for their potential health risk. High polarity of organic acids causes them to be incompatible with the apolar LDPE. Acid anhydrides were thought to be more compatible than free acids and their salts because of their lower polarity. Organic acid antimicrobials could be incorporated into the biopolymeric film for their compatibility.

Inorganic Metallic Ion.

Silver Ion. Silver ions in the microbial cell inhibit metabolic enzymes and have strong antimicrobial activity. Silver ions are generally incorporated into polymer films in the form of silver substituted zeolite, an ionic bonded metallic compound in which the sodium ions present has been substituted with the silver ions. Silver-substituted zeolite is thermo-stable and can be applied to the thermal process of synthetic polymers like polyethylene, polypropylene, and nylon as well as biopolymeric films (11, 17, 18). Silver ions are released from the silver-substituted zeolite incorporated in the film matrix to the food materials for antimicrobial action (18).

Titanium Ion. Titanium dioxide (TiO_2) is nontoxic and has been approved by the U.S. Food and Drug Administration for the use in foods and food contact materials (19). Ultraviolet energy shifts the energy level of TiO_2 to the excited state. On its way back to ground state, TiO_2 releases absorbed energy to the food material (20). The released energy may form very reactive radicals and singlet oxygen which have antimicrobial function. In this system titanium ion is not a migrating agent but trapped in the film structure (20). Currently there is considerable interest in the self-disinfecting property of TiO_2 to satisfy hygienic design requirements in food processing equipment surfaces (21, 22).

Natural Compounds. The naturally occurring antimicrobials are enzymes, peptides, oils, and other materials that have been present self-defense functions against microbial contamination. Typical examples are bacteriocins in lactic acid bacteria, lysozymes in egg white, flavonoids in plant extracts, and essential oils.

Bacteriocins. Bacteriocins are small bacterial peptides that show strong antimicrobial activity against closely related bacteria. Antimicrobial effectiveness of bacteriocins in food is related to specific antimicrobial activity of the bacteriocin, amount of the bacteriocin used, number of microorganisms, process conditions, interaction with food components, and pH and temperature of the product (23).

Nisin is a polypeptide produced by *Lactococcus lactis* spp. It has been approved as a food additive with GRAS status in over 50 countries worldwide. It has a relatively broad spectrum of antimicrobial activity against various lactic acid bacteria and other Gram-positive bacteria (24). It is particularly effective against heat-resistant bacterial spores of *Clostridium botulinum* (25). It is not effective against gram-negative bacteria because it cannot penetrate outer lipid membrane of cell to the cytoplasm (24). Use of nisin in conjunction with ethylenediamine tetraacetic acid (EDTA) may increase the antimicrobial effectiveness against Gram-negative bacteria (26). Nisin has been incorporated into biopolymer films such as soy protein, corn zein, chitosan, and methylcellulose films for antimicrobial edible coating applications (27, 28). The thermal processing in film production may reduce antimicrobial activity of nisin (28).

Lysozyme. Lysozyme, also known as muramidase or *N*-acetylmuramichydrolase, is a relatively small enzyme from hen egg white. Lysozyme is effective against spoilage and pathogenic microorganisms by disintegrating the cell wall structure. Antimicrobial activity of lysozyme is attributed to the function that catalyzes the hydrolysis of the β-1, 4 glycosidic bond between *N*-acetylmuramic acid and 2-cetyl-amino-2-deoxy-D-glucose residues in the bacterial cell wall (29, 30). Lysozyme demonstrates a strong antibacterial potential against Gram-positive bacteria such as *Listeria monocytogenes* (30). Lysozyme has been applied to biopolymer films such as chitosan, whey protein, fish gelatin, corn zein, and sodium alginate films in either purified or unpurified forms alone and in combination with EDTA and other bacteriocins (31, 32). Antimicrobial activity of immobilized lysozyme in polyvinyl alcohol film also has been reported against various spoilage and pathogenic bacteria (33).

Plant Extracts. Antimicrobial activity of phytochemicals in the extracts of spices and herbs has been demonstrated by many researchers (5, 6, 31). In many cases, the concentration of biologically active component in spices and herbs and their essential oils are too low to be effectively used for packaging applications due to their limited sensory acceptance at high concentration level (23). They may be used in junction with other biologically active agents and contribute to total hurdle technology system for microbial control. Many phytochemical compounds in essential oils and extracts responsible for antimicrobial activity are phenolic compounds.

1. *Essential Oils.* Plant extracts of coffee, green tea, spices, and herbs (i.e., cinnamon, cloves, mustard seed, oregano, rosemary, thyme and vanillin) have been evidenced for their antimicrobial activity against a wide spectrum of microorganisms (5, 34). The antimicrobial activities of the spices are

associated with phenolic compounds in their essential oil fraction. The antimicrobial essential oil components of cinnamon and cloves are eugenol and cinnamaldehyde, respectively. Terpenes such as carvacrol, *p*-cymene, and thymol are the major volatile components of oregano and thyme (23). Many essential oils are volatile and can be applied to volatile migration when they are incorporated into the packaging film (31).

2. *Allyl Isothiocyanate (AIT).* Allyl isothiocyanate is a naturally occurring nonphenolic volatile compound responsible for the flavor of horseradish, wasabi, and mustard. Volatilized AIT has an effective antimicrobial activity against variety of pathogens when used at low concentration. AIT causes metabolite leakage by affecting cell membranes (35). Antimicrobial activity of AIT-incorporated gelatin film, nylon 6,6 film, and PVDC/PVC copolymer film has been reported against spoilage and pathogenic microorganisms (36).

COMMERCIAL APPLICATIONS

Commercialized Antimicrobial Packaging

Even though many research works have been conducted all over the world, there are only a few commercialized products of antimicrobial food packaging materials. This is because of strict hygienic regulation on food packaging, high price, and limited consumer perception and acceptance on their effectiveness. The area of food preparation and utensil products has less strict regulation in applying the antimicrobial materials into real practices and has seen a higher number of commercial products—for example, kitchen board and gloves. Table 2 lists some examples of commercial products available in market. The list is not exclusive and covers only those observed in the writers' eye for the last 20 years. Some products available in a country or area may not be allowed for sale in other countries because of the difference in food safety regulation.

In a practical sense, ethanol emitter and plant extracts have acquired wider acceptance, depending on people's attitude and corresponding country's legislation. Some ethanol emitters combine the oxygen-scavenging capacity to inhibit aerobic spoilage organisms. Ag-containing ceramic materials have been applied in plastic films and containers where people generally recognize silver as hygiene-improving and antitoxic material. SO_2 generator may be used in postharvest handling and storage of agricultural products, where agricultural safety practices are applied. A ClO_2-generating plastic tube, Knick'n'clean®, which is activated by bending to mix two fluids in it, is marketed for the use in refrigerators for a limited time period of about 30 days. A ClO_2-emitting film (MicroGarde™) claimed to produce antimicrobial microatmosphere for 10 days keeping freshness of foods and breaking down ethylene gas. Until 2008, ready-to-eat food applications of this system await FDA clearance in the United States. Triclosan is not approved as a food additive and is incorporated into a plastic master batch, which is converted into food-contact household equipments such as cutting board and hand gloves.

Edible coating being a component of food may be applied for antimicrobial function when it contains safe

Table 2. Some Commercialized Antimicrobial Packaging or Food-Contact Materials in Food Storage, Packaging, and Preparation

Active Compound or Releasing Compound	Matrix or Form	Application	Trade Name and/or Producer
Ag-substituted zeolite or zirconium	PVC, LLDPE, PE, rubber	Wrap, film, kitchen board, kitchen glove	Agion® (Agion Technologies, USA), Zeomic™ (Sinanen Zeomic Co., Japan), Cleanaid™ (Gyunghyang Industrial Co., Korea)
Chlorine dioxide	Polyolefin	Film, compartmented stick for refrigerator	MicroGarde™ (BarrierSafe Solutions International Inc., USA), Knick'n'clean® (Helrik Bobke, Germany)
Ethanol	Silicon dioxide	Sachet	Ethicap™ (Freund Corp., Japan), Ageless™ type SE (Mitsubishi Gas Chemical., Japan)
Sulfur dioxide	Laminated plastic sheet with $Na_2S_2O_5$	Sheet or pad for postharvest storage of grape fruits	Uvasy™ (Grapetek, South Africa)
Triclosan	Polymer, rubber, etc.	Food preparation equipment and supplies, kitchen sponge and gloves	Microban® (Microban International Ltd., USA), Ultra-Fresh® (Thomson Research Associates, Canada)
Wasabi (Japanese horseradish) extract	Encapsulation in cyclodextrin	Coated PET film, tablet	Wasapower™ (Sekisui Plastics Co., Japan)

bioactive compounds, organic acids, or edible essential oils of plant or spice origins. Because the coating may be understood as a food component, there would be no barrier of application in the regulations if all active/inactive ingredients are food grade. The potential edible coating matrices include chitosan, hydroxy propyl methyl cellulose, and alginate gels (29).

Effectiveness of Antimicrobial Food Packaging

Many studies showed potential benefits of antimicrobial packaging for fresh fruits and vegetables, milk, beverages, cheese, ham, meat and fish (37, 38). Packaging materials with nisin, chitosan, or acids typically resulted in marginal microbial count reduction of 1.5–2.5 log10 compared to control (37). The reduction or suppression of microbial growth by the antimicrobial packaging is varied too much to conclude that any specific system or condition is universally optimal or better than others. It is generally accepted that the results in microbial media or buffer solutions cannot be directly applied to the real food applications. Conducting test with real food sample is needed for practical or commercial application.

The effectiveness of microbial inhibition by antimicrobial packaging is generally improved when combined with other preservation hurdles such as modified atmosphere, low pH, high-pressure treatment, and low temperature (38–40). Analysis of microbial spoilage kinetics with antimicrobial packaging showed that the microbial growth was suppressed more with lower storage temperature (41). The microbial inhibition of antimicrobial packaging at the low temperature could be represented by low cell concentration, extended lag time, and reduced growth rate.

When the temperature dependence of microbial lag time was analyzed by square root kinetic model [equation (1)], antimicrobial packaging showed higher temperature dependence (increased b value) with increase of hypothetical minimum growth temperature (increased $T_{\min}$) (41):

$$\sqrt{\frac{1}{t_{\text{lag}}}} = b \cdot (T - T_{\min}) \tag{1}$$

where T is the temperature (in °C), b is slope parameter representing temperature effect, and $T_{\min}$ is respective theoretical minimum temperatures for growth estimated by extrapolation of the regression line to the temperature axis (Figure 2).

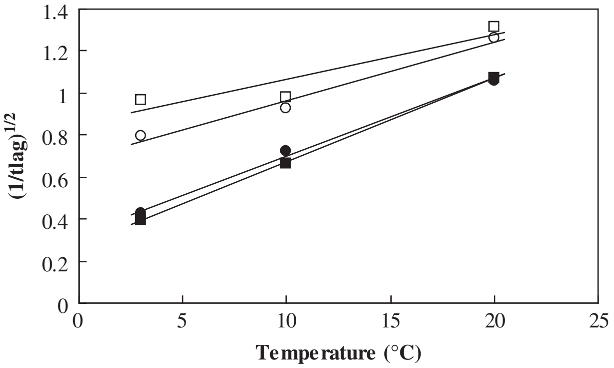

Figure 2. Effect of antimicrobial packaging (incorporated with chitosan and nisin) on temperature dependence of microbial lag time. (□) Yeasts of orange juice in plain package; (■) yeasts of orange juice in the antimicrobial package; (○) aerobic bacteria of milk in plain package; (●) aerobic bacteria of milk in the antimicrobial package. (From data of Ref. (41)).

The effectiveness of antimicrobial packaging may vary with food type, release kinetics of antimicrobial agents, and environmental factors. Many antimicrobial packaging systems that show effective activity with microbial culture media may not work with real foods. Some food components such as fatty acids, amino acids, sulfates, and/or enzymes may diminish the activity of the antimicrobial packaging films (11, 42). Food–package interaction may change the mechanism and effectiveness of microbial inhibition of the antimicrobial packaging system (29). There are possibilities that the incorporation of antimicrobials into the plastic material may change its mechanical, barrier, and optical properties. Sensory properties of food may also be affected by food–package interaction. For example, film with plant extract such wasabi essential oil may alter flavor of the contained food. The antimicrobial packaging may have to be designed, selected, and customized for each food type (43). The packaging system has to be selected after consideration on the primarily concerned target microorganism, spoilage organisms, its activity spectrum, microbial inhibition mode, food properties, release of active agent, and storage conditions.

Regulations

Antimicrobial packaging to be marketed in the United States is subject to the food additive approval process if its components are reasonably expected to migrate to foods for effective microbial inhibition (4). There are two processes of food contact substance approval in FDA: food contact notification process and food additive petition process. Packaging material that has no intended technical effect on the food may be approved by the former process, in which a manufacturer should notify the FDA to market a new product at least 120 days before its introduction and can sell it unless the FDA objects to the notification. However, the material that exerts antimicrobial effect on the food through migration or controlled release needs to be processed through the food additive petition process. Food contact substance notification is specific only to the manufacturer named in the notification, and it does not apply generically to the product category. Due to complicated and strict regulation on approval of antimicrobial food packaging materials, their applications in food packaging is very limited in the United States. Chlorine-dioxide-releasing material seems to reach the commercial stage (42). Some silver incorporated materials are approved for food-contact purpose (6).

Until 2004, plastic packaging regulations in the EU did not allow any specific provisions for antimicrobial packaging and, thus, required that any potential antimicrobial component in the antimicrobial food packaging should be covered by "positive lists," which would have specific migration limit (44). The plastic packaging material should also have met overall migration limit, typically 60 mg per kg food. In 2004, active and intelligent packaging including antimicrobial food packaging has been allowed in the EC Framework Regulation 1935/2004. Further detailed requirements and specification on adopting antimicrobial packaging will soon come out, to include positive lists of authorized substances and/or materials and articles.

General food packaging regulations in Japan made allowances for active packaging emitting ethanol and wasabi extract volatiles to preserve the bakery products and prepared foods. Australia and New Zealand legislation permits silicon dioxide sachets containing ethanol and flavors specifically (45), which may act to inhibit microbial growth.

BIBLIOGRAPHY

1. M. L. Rooney, "Overview of Active Food Packaging" in M. L. Rooney, ed., *Active Food Packaging*, Blackie Academic & Professional, Glasgow, UK, 1995, pp. 1–37.
2. Flexible Packaging Association web information. Industry Facts, Available at http://www.flexpack.org/INDUST/industry_facts_figures.asp. Accessed October 7 2008.
3. S. Pardini, U.S. Patent 4,708,870, Method for imparting Antimicrobial Activity from Acrylics," 1987.
4. J. H. Han, "Antimicrobial Food Packaging," *Food Technol*. **54**, 56–65 (2000).
5. J. H. Han, "Antimicrobial Food Packaging" in R. Ahvenainen, ed., *Novel Food Packaging Techniques*, CRC Press LLC, Boca Raton, FL, 2003, pp. 50–70.
6. P. Suppakul, J. Miltz, K. Sonneveld, and S. W. Bigger, "Active Packaging Technologies with an Emphasis on Antimicrobial Packaging and Its Applications," *J. Food Sci*. **68**, 408–420 (2003).
7. J. Han, M. E. Castell-Perez, and R. G. Moreira, "The Influence of Electron Beam Irradiation of Antimicrobial-Coated LDPE/Polyamide Films on Antimicrobial Activity and Film Properties," *LWT-Food Sci. Technol*. **40**, 1545–1554 (2007).
8. L. Vermeiren, F. Devlieghere, M. van Beest, N. de Kruijf, and J. Debevere, "Developments in the Active Packaging of Foods," *Trends Food Sci. Technol*. **10**, 77–86 (1999).
9. J. H. Han and J. D. Floros, "Simulating Diffusion Model and Determining Diffusivity of Potassium Sorbate through Plastics to Develop Antimicrobial Packaging Films," *J. Food Process Preserv*. **22**, 107–122 (1998).
10. J. H. Choi, W. Y. Choi, D. S. Cha, M. J. Chinnan, H. J. Park, D. S. Lee, and J. M. Park, "Diffusivity of Potassium Sorbate in Kappa-Carrageenan Based Antimicrobial Film," *LWT-Food Sci. Technol*. **38**, 417–423 (2005).
11. P. Appendini and J. H. Hotchkiss, "Review of Antimicrobial Food Packaging," *Innov. Food Sci. Emerg. Technol*. **3**, 113–126 (2002).
12. T. Tashiro, "Antibacterial and Bacterium Adsorbing Macromolecules," *Macromol. Mater. Eng.* **286**, 63–87 (2001).
13. T. J. Franklin and G. A. Snow, *Biochemistry of Antimicrobial Action*, Chapman and Hall, New York, 1989, pp. 55–72.
14. S. P. Denyer and G. S. A. B. Stewart, "Mechanisms of Action of Disinfectants," *Int. Biodeterior. Biodegrad*. **41**, 261–268 (1998).
15. Y. M. Weng, M. J. Chen, and W. Chen, "Antimicrobial Food Packaging Materials from Poly(ethylene-co-methacrylic Acid)," *LWT-Food Sci. Technol.* **32**, 191–195 (1999).
16. S. Min and J. M. Krochta, "Edible Coating Containing Bioactive Antimicrobial Agents" in J. H. Han, ed., *Packaging for Nonthermal Processing of Food*, Blackwell Publishing, Ames, IA, 2007, pp. 29–52.
17. H. Pehlivan, D. Balkose, S. Ulku and F. Tihminlioglu, "Characterization of Pure and Silver Exchanged Natural Zeolite Filled Polypropylene Composite Films," *Compos. Sci. Technol.* **65**, 2049–2058 (2005).
18. A. L. Brody, E. R. Strupinsky, and L. R. Kline, *Active Packaging for Food Applications*, CRC Press, Boca Raton, FL, 2001, pp. 131–194.
19. FDA/CFSAN web information, "Summary of Color Additives Listed for Use in the US," Available at http://www.foodsafety.gov/~dms/opa-col2.html, Accessed October 9, 2008.
20. Y. Kikuchi, K. Sunada, T. Iyoda, K. Hashimoto, and A. Fujishima, "Photocatalytic Bactericidal Effect of TiO_2 Thin Films: Dynamic View of the Active Oxygen Species Responsible for the Effect," *J. Photochem. Photobiol. A-Chem.* **106**, 51–56 (1997).
21. C. Chawengkijwanich and Y. Hayata, "Development of TiO2 Powder-Coated Food Packaging Film and Its Ability to Inactivate *Escherichia coli* in Vitro and in Actual Tests," *Int. J. Food Microbiol.* **123**, 288–292 (2008).
22. M. Cho, Y. Choi, H. Park, K. Kim, G. J. Woo, and J. Park, "Titanium Dioxide/UV Photocatalytic Disinfection in Fresh Carrots," *J. Food Prot.*, **70**, 97–101 (2007).
23. A. S. Naidu, "Overview" in A. S. Naidu, ed., *Natural Food Antimicrobial Systems*, CRC Press, New York, 2000, pp. 1–16.
24. L. V. Thomas, M. R. Clarkson and J. Delves-Broughton, "Nisin" in A.S. Naidu, ed., *Natural Food Antimicrobial Systems*, CRC Press, New York, 2000, pp. 463–525.
25. K. Cooksey, "Antimicrobial food packaging materials," *Additives for Polymers* **2001**, 6–10 (2001).
26. P. Blackburn, J. Polak, S.-A. Gusik, and S. D. Rubino, "U.S. Patent 5,753,614, Nisin compositions for Use as Enhanced, Broad Range Bactericides," 1998.
27. J. L. Grower, K. Cooksey, and K. J. K. Getty, "Development and Characterization of an Antimicrobial Packaging Film Coating Containing Nisin for Inhibition of *Listeria monocytogenes*," *J. Food Prot.*, **67**, 475–479 (2004).
28. T. Padgett, I. Y. Han, and P. L. Dawson, "Incorporation of Food-Grade Antimicrobial Compounds into Biodegradable Packaging Films," *J. Food Prot.* **61**, 1330–1335 (1998).
29. V. Coma, "Bioactive Packaging Technologies for Extended Shelf Life of Meat-Based Products," *Meat Sci.* **78**, 90–103 (2008).
30. J. N. Losso, S. Nakai, and E. A. Charter, "Lysozyme" in A. S. Naidu, ed., *Natural Food Antimicrobial systems*, CRC Press, New York, 2000, pp. 185–210.
31. J. H. Han, "Antimicrobial Packaging Systems" in J. H. Han, ed., *Innovations in Food Packaging*, Elsevier Ltd., Amsterdam, 2005, pp. 80–106.
32. Ç. M. Güçbilmez, A. Yemenicioğlu, and A. Arslanoğlu, "Antimicrobial and Antioxidant Activity of Edible Zein Films Incorporated with Lysozyme, Albumin Proteins and Disodium EDTA," *Food Res. Int.* **40**, 80–91 (2007).
33. A. Conte, G. G. Buonocore, M. Sinigaglia, and M. A. Del Nobile, "Development of Immobilized Lysozyme Based Active Film," *J. Food Eng.* **78**, 741–745 (2007).

34. A. Smith-Palmer, J. Stewart, and L. Fyfe, “Antimicrobial Properties of Plant Essential Oils and Essences Against Five Important Food-Borne Pathogens,” *Lett. Appl. Microbiol.* **26**, 118–122 (1998).
35. C. M. Lin, J. F. Preston and C. I. Wei, Antibacterial Mechanism of Allyl Isothiocyanate, *J. Food Prot.* **63**, 727–734 (2000).
36. L. T. Lim and M.A. Tung, “Vapor Pressure of Allyl Isothiocyanate and Its Transport in PVDC/PVC Copolymer Packaging Film,” *J. Food Sci.* **62**, 1061–1066 (1997).
37. R. D. Joerger, Antimicrobial Films for Food Applications: A Quantitative Analysis of Their Effectiveness,” *Packag. Technol. Sci.* **20**, 231–273 (2007).
38. J. Vartiainen, E. Skytta, J. Enqvist, and R. Ahvenainen, “Properties of Antimicrobial Plastics Containing Traditional Food Preservatives,” *Packag. Technol. Sci.* **16**, 223–229 (2003).
39. K. Cooksey, “Effectiveness of Antimicrobial Food Packaging Materials,” *Food Addit. Contam.* **22**, 980–987 (2005).
40. A. Jofre, T. Aymerich, and M. Garriga, “Assessment of the Effectiveness of Antimicrobial Packaging Combined with High Pressure to Control *Salmonella* sp in Cooked Ham,” *Food Control* **19**, 634–638 (2008).
41. C. H. Lee, H. J. Park, and D. S. Lee, “Influence of Antimicrobial Packaging on Kinetics of Spoilage Microbial Growth in Milk and Orange Juice,” *J. Food Eng.* **65**, 527–531 (2004).
42. L. Vermeiren, F. Devlieghere, and J. Debevere, “Effectiveness of Some Recent Antimicrobial Packaging Concepts,” *Food Addit. Contam.* **19**, 163–171 (2002).
43. S. Quintavalla and L. Vicini, “Antimicrobial Food Packaging in Meat Industry,” *Meat Sci.* **62**, 373–380 (2002).
44. N. D. de Kruijf and R. Rijk, “Legislative Issues Relating to Active and Intelligent Packaging” in R. Ahvenainen, ed., *Novel Food Packaging Techniques*, CRC Press LLC, Boca Raton, FL, 2003, pp. 459–496.
45. N. Waite, *Active Packaging*, Pira International, Surrey, United Kingdom, 2003, pp. 1–110.

APPLICATIONS OF PREDICTIVE MICROBIOLOGY TO FOOD PACKAGING

SHIOWSHUH SHEEN
Eastern Regional Research
Center, Microbial Food Safety
Research Unit, Agricultural
Research Service, U.S.
Department of Agriculture,
Wyndmoor, Pennsylvania

INTRODUCTION

This section is to introduce the currently available predictive microbiology models, such as microbial growth, inactivation, survival, and others, to food applications including packaging. Because packaging may be the last step in food-processing operations, it may inherit the consequences of microbial transfer, growth, inactivation, and survival cascaded down during the food manufacturing. Packaging also functions as a protection barrier to environmental changes and potential abuses, which may cause food spoilage. In general, food-processing operations should have eliminated or reduced the harmful microbial counts to a safety level before the final packaging step, which provides a means to control the food qualities, including foodborne hazards. The microbiological shelf life can be estimated or predicted using mathematical models, if available and properly selected.

Microbial safety is one of the major quality control attributes for packaged food. Pathogen contamination in consumer food products happens every year. The development of effective methods to reduce and eliminate the potential microbial food hazards is the primary goal of food scientists, producers, and government at different levels. Several food pathogens have potentials to cause public foodborne hazards including *Listeria monocytogenes*, *Escherichia coli* O157:H7, *Salmonella spp*. and so on. The Centers for Disease Control and Prevention (CDC) estimated that about 2500 cases of listeriosis occurr each year, which results in 500 deaths in the United States. A survey in eight categories of ready-to-eat foods, collected over 14–23 months, from retail markets in Maryland and northern California FoodNet sites showed that 1.82% samples were positive with *L. monocytogenes* contamination (1). The *E. coli* O157:H7 outbreaks in spinaches and ground beef stress the needs of effective means to monitor and to ensure food safety, even more. The most recent *Salmonella* outbreaks in peanut butter indicated that microbial cross-contamination could occur during food production. Pathogenic public health hazard is always on the top of safety list for food producers and inspection agencies. Predictive microbiology is a useful tool to describe, predict, and assess the potential hazard in processed and packaged consumer food products.

The Food and Drug Administration (FDA) and the United States of Department of Agriculture (USDA) have established food-safety regulations that govern the manufacture and distribution of domestic and imported foods to ensure the safety of food supply chain. These regulations are often difficult to locate and/or complicated to comply even for food companies that have resources to employ food safety experts and to interpret the regulations. To promote food safety and reduce the financial burden, especially for small companies, the Predictive Microbiology and Bioinformatics for Food Safety and Security research group of USDA/Agricultural Research Service (ARS)/Eastern Regional Research Center (ERRC) has implemented a 3-year project to create the Predictive Microbiology Information Portal (PMIP) available on the Internet to help food producers and safety researchers better access food-safety information, regulations, and tools at no cost to the end users. The PMIP provides a wide range of food-safety-related information such as regulations, microbiological models, and microbiological data. The portal has been available to the public since September 2007, and it can be accessed at http://portal.arserrc.gov/. The portal was designed to make food regulations and tens of thousands of microbiological data accessible to the public.

The PMIP has been accessed million times from tens of thousands unique Internet Protocol (IP) addresses worldwide since its launch. The microbial modeling component in the portal, the USDA Pathogen Modeling Program

(PMP), was developed and is maintained and regularly improved by the USDA/ARS/ERRC staff. The PMP is a user-friendly software that contain a set of mathematical models, which predict the behavior of major human pathogens in foods under selected environmental conditions commonly used in the food industry. The PMP is used throughout the world to assist food companies comply with food-safety regulations and to reduce the human illness risk through better food process and product designs. The PMP was downloaded about 5000 times annually and is routinely used by 30% of the food industry. The number of downloads of the PMP has increased 40% to an estimated 7000 times/yr since the PMIP launch, which indicates the portal is reaching out a wider customer base including the food packaging and shelf-life applications.

PREDICTIVE MICROBIOLOGY AND FOOD PACKAGING

The predictive microbiology (microbial predictive models) include growth, inactivation, surface transfer (or cross contamination), and survival models, which play important roles in the microbial food safety while tied in the food packaging design to reduce the microbial hazard. The transfer model may predict the pathogen transferred among process equipment or surfaces. The growth models show the potential growth of a specified pathogen under different conditions, e.g., temperature, pH, water activity, added preservative, and so on. The growth models may take into account of other environmental factors, which include modified atmosphere packaging (MAP) conditions, transportation, distribution, and consumer abuses if those factors are built in. Thermal or nonthermal process to reduce or eliminate microbial counts may be evaluated using the inactivation models. For the entire microbial safety assessment in a packaged product, a microbial transfer model can be applied to estimate the quantity of contamination, followed by the growth and/or inactivation models with designed process conditions to predict the potential pathogenic health hazards. With all information collected and available in the models, the users may select the parameters to match the packaging conditions and to predict the shelf life, for example, the fresh-cut packaged ready-to-eat vegetables. Other packaging-related models may apply to the model construction step, which describes the entire production processes to achieve the microbial shelf-life assessment.

Users also can utilize the models and database in the portal (PMIP) to reduce food-safety challenge studies for their new products. The PMP and Combase, which are accessible through PMIP, may provide the useful tools for microbial-safety-related shelf-life optimization and packaging design.

PREDICTIVE MICROBIOLOGY MODELS

For microbial growth, the sigmoid functions have been the most popular empirical models used to describe the microbial growth; one of such models is the modified Gompertz model, which is shown below (2):

$$\log x(t) = A + C\exp\{-\exp[-B(t-M)]\} \tag{1}$$

where $x(t)$ is the number of cells at time t; A is the asymptotic count as t decreases to zero; C is the difference in value of upper and lower asymptote; B is the relative growth rate at M; and M is the time at which the absolute growth rate is maximum or the inflexion point of the curve. Using the parameters in equation (1), the following terms can be derived to characterize the microbial growth:

$$\text{Lag time} = M - (1/B) + \frac{\log N(0) - A}{BC/2.718} \tag{2}$$

$$\text{Exponential growth time} = BC/2.718 \tag{3}$$

$$\text{Generation time} = \log(2)\cdot 2.718/BC = 0.8183/BC \tag{4}$$

The lag phase is the time for microbial to adjust to a new environment, followed by the exponential phase with a maximum growth rate until the available medium deprived or limited by other factors, then to the stationary phase. Baranyi and coworkers (3–5) introduced a mechanistic model, which includes the lag phase, the exponential growth phase, and the stationary phase. The explicit Baranyi model is expressed as the following:

$$y(t) = y_o + \mu_{\max}A(t) - \frac{1}{m}\ln\left(1 + \frac{\exp(m\mu_{\max}A(t)) - 1}{\exp(m(y_{\max} - y_o))}\right) \tag{5}$$

$$A(t) = t + \frac{1}{v}\ln\left(\frac{\exp(-vt) + q_o}{1 + q_o}\right) \tag{6}$$

where $y(t) = \ln x(t)$, $y_o = \ln(x_o)$, and v is the rate of increase of the limiting substrate, which is generally assumed equal to $\mu_{\max}$. Parameter m is an index of the curvature before the stationary phase. The q_o and x_o represent the initial concentration of limiting substrate and cell number, respectively. $\mu_{\max}$ is the maximum growth rate. Baranyi models are more complicated than the modified Gompertz models and may be applied to the dynamic process conditions, e.g., temperature changes with time.

Other predictive models may include inactivation (thermal and nonthermal), cooling survival, and growth under influence of other factors, added or environmental. The growth models are classified as the primary model. The growth and/or inactivation models with parameters that interact with other factors are considered as the secondary models. Recently, the surface transfer models were developed to describe the cross contamination of food pathogens during slicing of foods, e.g., ready-to-eat deli meats, smoked salmon, and so on.

The transfer models typically only consider the pathogens transferred from one step to another step. The microbial counts may be performed at each individual step or at the end of one series of steps. Because it is a continuous and in a relative short time period, no growth or inactivation factors were built in this kind of modeling. The important factors will be the processing parameters used in the process flow, and therefore, empirical models were considered. Typically, a microbial count as a function of several operation parameters was presented. The surface transfer models shown below were the recently developed by Sheen (6) for *L. monocytogenes* transfer during slicing in two cross-contamination routes.

I: Slicing blade to meat product,

$$Y = 0.461 \cdot Exp(0.255 \cdot n) \cdot Exp\left(\frac{-X}{0.0215 \cdot n\hat{}4.962}\right) \tag{7}$$

II: Meat to blade to meat product,

$$Y = 0.495 \cdot Exp(0.244 \cdot n) \cdot Exp\left[\frac{-X}{23.98 \cdot Exp(0.413 \cdot n)}\right] \tag{8}$$

where Y is the log colony forming unit (CFU) per slice; X is the slice number index; and n is the initial microbial count in log CFU.

The general microbial inactivation model developed following the first-order kinetic chemical reaction described the microbial death reasonably well. However, the microbial inactivation could become complicated because of the microbial itself, environment conditions, and treatment applied to kill the micro-organism, especially for food pathogens. Some important parameters may be temperature dependent. The D and Z values, which are typically used in the thermal process to evaluate the thermal lethality and also can be adopted to other inactivation study. To simulate the inactivation, some studies used the curve-fitting method simply fit the experimental data. A nonlinear approach using the power law function that best represented the inactivation is shown as:

$$\text{Log}\,(N/\text{No}) = -(t^p/D) \tag{9}$$

where p is the power. A concave or convex curve is represented by $p < 1$ or $p > 1$, respectively.

If shoulder or tailing appears in the inactivation curve, then the model will become even more complicated. Researchers have demonstrated that the asymmetric Gompertz function or the mirror image of Baranyi growth model may fit certain nonlinear survival or inactivation curves well.

PMIP AND PMP SAMPLE CASE DEMONSTRATIONS

The homepage of PMIP shown below serves as the gateway to access other components available to the users. It is highly beneficial for the users to navigate the website and become familiar with all options and available data. Two examples are demonstrated.

EXAMPLE 1: THERMAL INACTIVATION OF PATHOGENS IN FOODS

The inactivation on microbial growth due to thermal (temperature) effect can be estimated by using the PMP models,

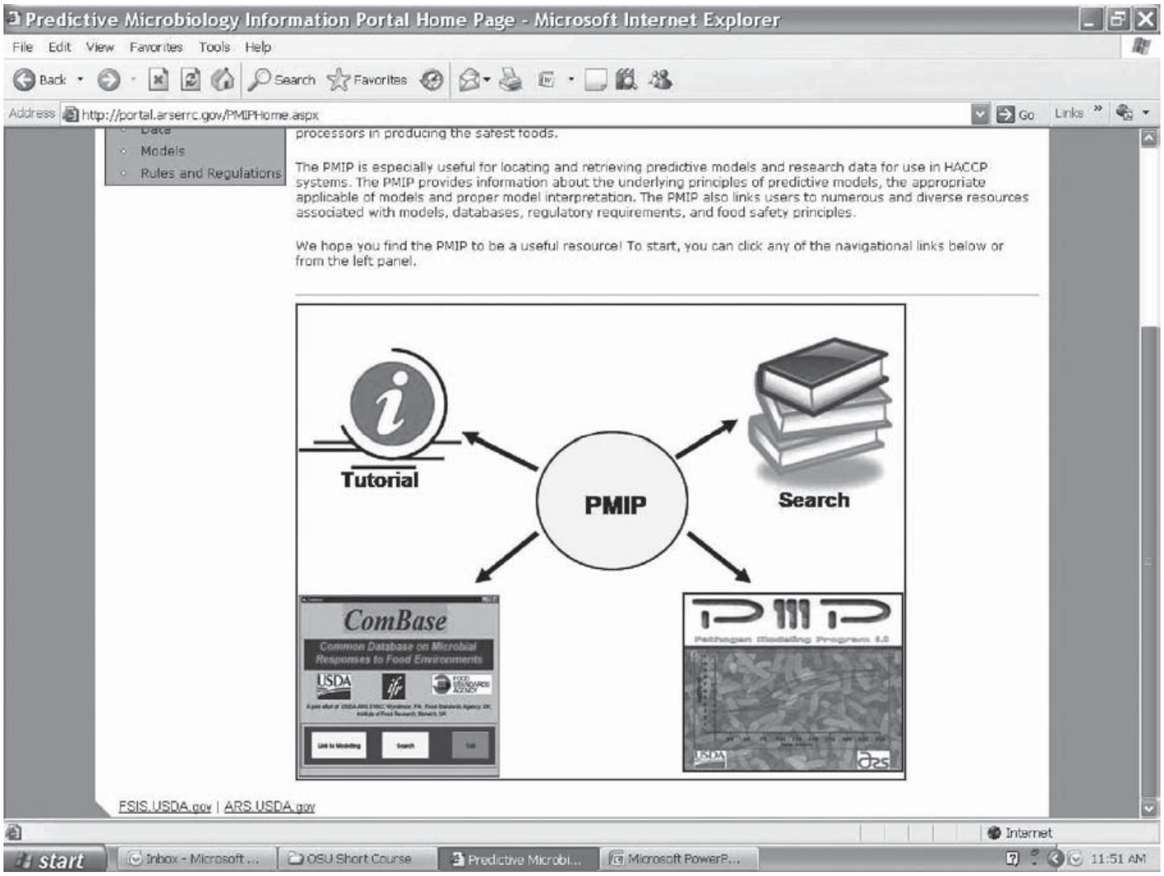

processors in producing the safest foods.

The PMIP is especially useful for locating and retrieving predictive models and research data for use in HACCP systems. The PMIP provides information about the underlying principles of predictive models, the appropriate applicable of models and proper model interpretation. The PMIP also links users to numerous and diverse resources associated with models, databases, regulatory requirements, and food safety principles.

We hope you find the PMIP to be a useful resource! To start, you can click any of the navigational links below or from the left panel.

FSIS.USDA.gov | ARS.USDA.gov

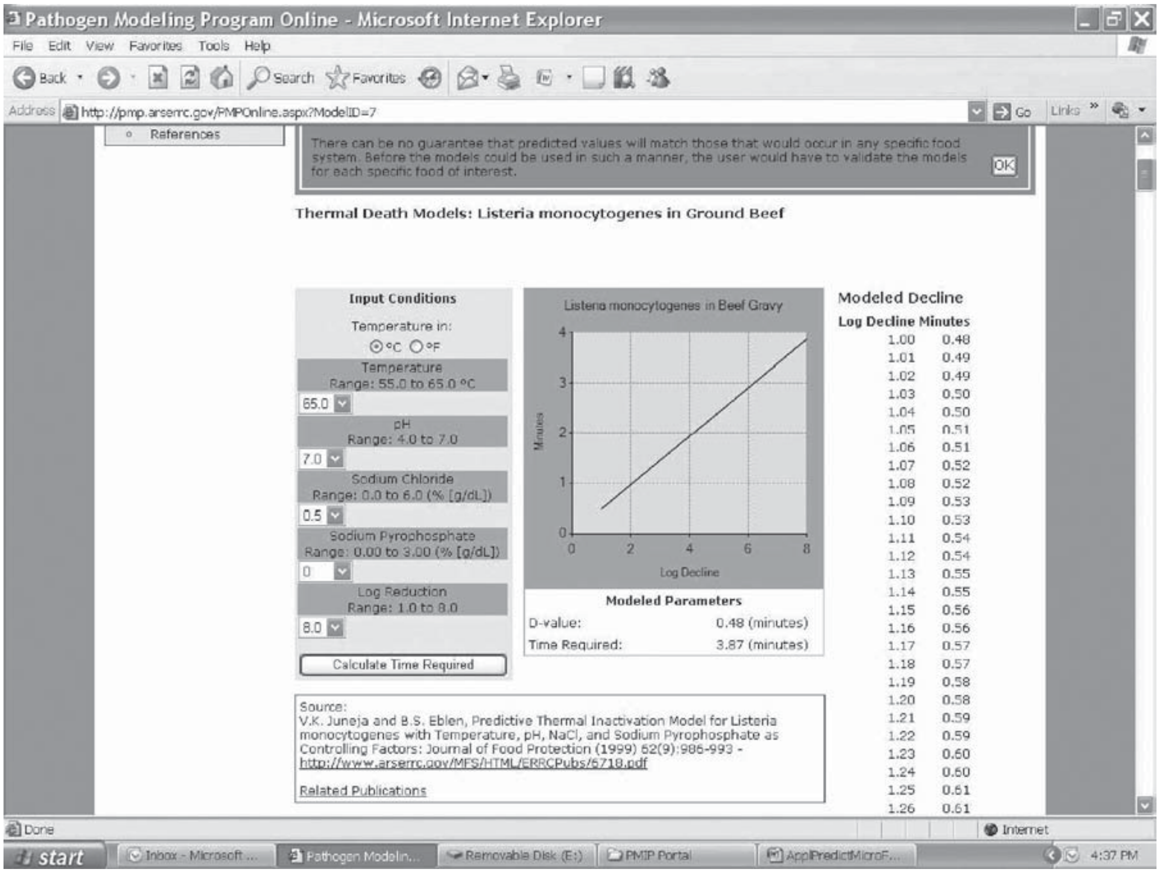

There can be no guarantee that predicted values will match those that would occur in any specific food system. Before the models could be used in such a manner, the user would have to validate the models for each specific food of interest.

Thermal Death Models: Listeria monocytogenes in Ground Beef

Input Conditions

Temperature in: ● °C ○ °F

Temperature Range: 55.0 to 65.0 °C: 65.0

pH Range: 4.0 to 7.0: 7.0

Sodium Chloride Range: 0.0 to 6.0 (% [g/dL]): 0.5

Sodium Pyrophosphate Range: 0.00 to 3.00 (% [g/dL]): 0

Log Reduction Range: 1.0 to 8.0: 8.0

Modeled Parameters

D-value: 0.48 (minutes)

Time Required: 3.87 (minutes)

Modeled Decline

Log Decline	Minutes
1.00	0.48
1.01	0.49
1.02	0.49
1.03	0.50
1.04	0.50
1.05	0.51
1.06	0.51
1.07	0.52
1.08	0.52
1.09	0.53
1.10	0.53
1.11	0.54
1.12	0.54
1.13	0.55
1.14	0.55
1.15	0.56
1.16	0.56
1.17	0.57
1.18	0.57
1.19	0.58
1.20	0.58
1.21	0.59
1.22	0.59
1.23	0.60
1.24	0.60
1.25	0.61
1.26	0.61

Source:
V.K. Juneja and B.S. Eblen, Predictive Thermal Inactivation Model for Listeria monocytogenes with Temperature, pH, NaCl, and Sodium Pyrophosphate as Controlling Factors: Journal of Food Protection (1999) 62(9):986-993 - http://www.arserrc.gov/MFS/HTML/ERRCPubs/6718.pdf

Related Publications

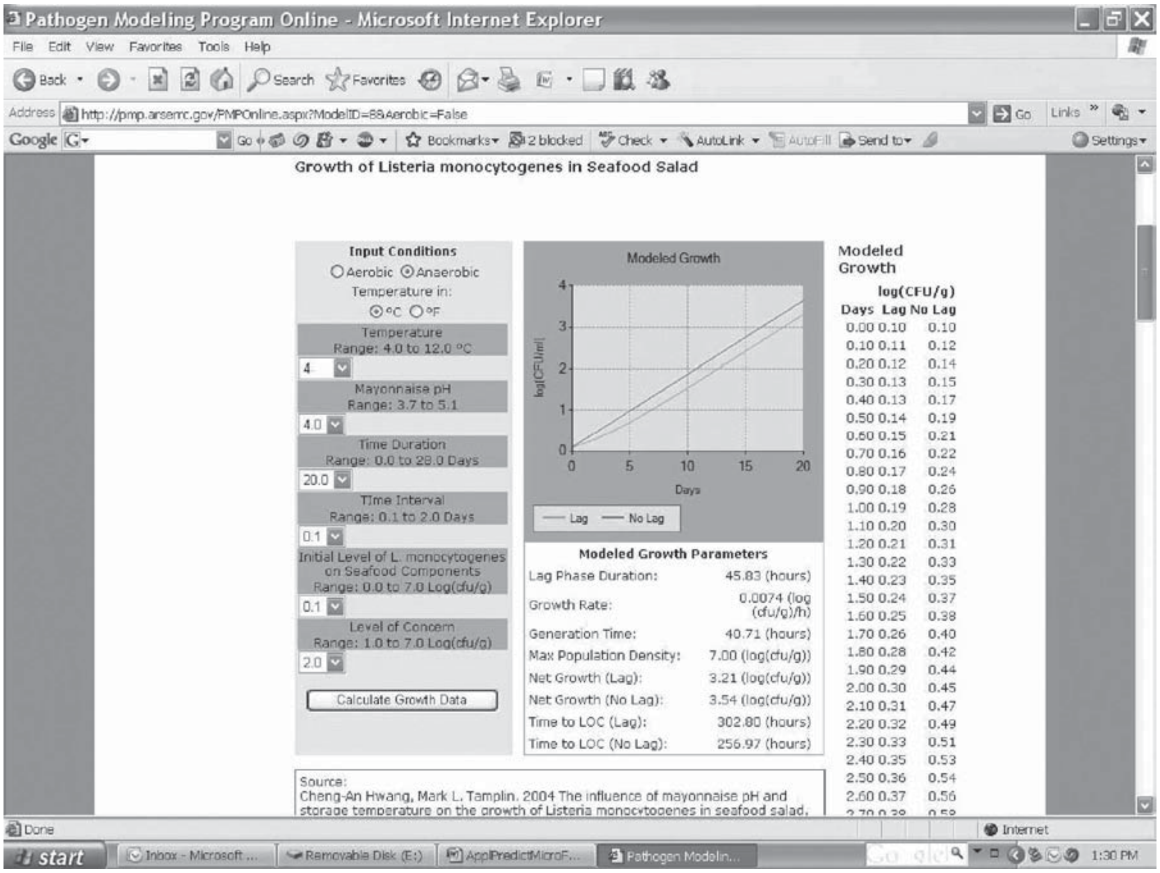

Growth of Listeria monocytogenes in Seafood Salad

Input Conditions

○ Aerobic ● Anaerobic

Temperature in: ● °C ○ °F

Temperature Range: 4.0 to 12.0 °C: 4

Mayonnaise pH Range: 3.7 to 5.1: 4.0

Time Duration Range: 0.0 to 28.0 Days: 20.0

TIme Interval Range: 0.1 to 2.0 Days: 0.1

Initial Level of L. monocytogenes on Seafood Components Range: 0.0 to 7.0 Log(cfu/g): 0.1

Level of Concern Range: 1.0 to 7.0 Log(cfu/g): 2.0

Modeled Growth Parameters

Lag Phase Duration: 45.83 (hours)

Growth Rate: 0.0074 (log (cfu/g)/h)

Generation Time: 40.71 (hours)

Max Population Density: 7.00 (log(cfu/g))

Net Growth (Lag): 3.21 (log(cfu/g))

Net Growth (No Lag): 3.54 (log(cfu/g))

Time to LOC (Lag): 302.80 (hours)

Time to LOC (No Lag): 256.97 (hours)

Modeled Growth

	log(CFU/g)	
Days	Lag	No Lag
0.00	0.10	0.10
0.10	0.11	0.12
0.20	0.12	0.14
0.30	0.13	0.15
0.40	0.13	0.17
0.50	0.14	0.19
0.60	0.15	0.21
0.70	0.16	0.22
0.80	0.17	0.24
0.90	0.18	0.26
1.00	0.19	0.28
1.10	0.20	0.30
1.20	0.21	0.31
1.30	0.22	0.33
1.40	0.23	0.35
1.50	0.24	0.37
1.60	0.25	0.38
1.70	0.26	0.40
1.80	0.28	0.42
1.90	0.29	0.44
2.00	0.30	0.45
2.10	0.31	0.47
2.20	0.32	0.49
2.30	0.33	0.51
2.40	0.35	0.53
2.50	0.36	0.54
2.60	0.37	0.56

Source:
Cheng-An Hwang, Mark L. Tamplin. 2004 The influence of mayonnaise pH and storage temperature on the growth of Listeria monocytogenes in seafood salad.

which are available to certain food items. The user may select the heat inactivation (under the "Models≫Bacterium" headline, online option), then the "food pathogen" to select the microbe, which leads the user to key in other parameters, like pH, salt content, sodium pyrophosphate, and targeted log reduction. The temperature also needs to be specified for the time-required calculation. The following figure shows the heat inactivation of 8 log *L. monocytogenes* reduction in ground beef requires 3.87 min (D-value = 0.48 min at 65°C). If a lower temperature at 55°C is selected with other factors remained the same, the process time becomes 159.93 min (*D*-value = 19.94 min at 55°C). Therefore, to achieve the desired thermal inactivation, the PMP model may provide useful information to select the proper process with parameters fit to the product.

EXAMPLE II: SHELF LIFE STUDY AND PREDICTION

The PMP models can be used to predict the shelf life of packaged foods. The user may find the parameters to match or closely fit the conditions of a food item and make the reasonable shelf-life prediction. For example, to predict the shelf life of vacuum-packaged seafood salad with the targeted pathogen like *L. monocytogenes* <100 CFU/g, the user may apply the following steps: (a) bacteria≫model; (b) *L. monocytogenes*; (c) growth anaerobic (shrimp and imitation crab salad); (d) select temperature, pH, time duration, time interval, initial level of *L monocytogenes* and level of concern; and (e) calculate growth data. Results will appear on the screen as the following, which indicates the shelf life is about 10 days. For comparison, one may increase the temperature to 8°C and pH to 5.0, and the shelf life becomes 5 days.

The table also shows some useful information, us such as growth rate, generation time, lag phase duration, and so on. When the users apply a low level of *L. monocytogenes* (e.g., <0.1 log CFU), it is recommended that the worst-case situation used for food safety. This example is for demonstration only; the user should visit the regulatory component available on the same website and acquire the food regulations in different country and products. The *L monocytogenes* detection level in the United States is zero (negative) per 25 g and other countries may impose different tolerance levels.

BIBLIOGRAPHY

1. D. E. Gombas, Y. Chen, R. S. Clavero, and V. N. Scott, "Survey of *Listeria monocytogenes* in Ready-to-Eat Foods," *J. Food Prot.* **66**, 559–569 (2003).
2. R. C. McKellar and X. Lu, "Primary Models" in R. C. McKellar, and X. Lu, "*Modeling Microbial Responses in Food,*" CRC Series in Contemporary Food Science, CRC Press, New York, 2004.
3. J. Baranyi and T. A. Roberts, "Mathematics of Predictive Food Microbiology," *Int. J. Food Microbiol.*, **26**, 199–218 (1995).
4. J. Baranyi and T. A. Roberts, "A Dynamic Approach to Predicting Bacterial Growth in Food," *Int. J. Food Microbiol.*, **23**, 277–294 (1994).
5. J. Baranyi T. A. Roberts, and P. McClure, "A Non-Autonomous Differential Equation to Model Bacterial Growth," *Food Microbiol.* **10**, 43–59 (1993).
6. S. Sheen "Modeling Surface Transfer of *Listeria monocytogenes* on Salami During Slicing," *J. Food Science* **73**(6), E304–E311 (2008).

General References

C. A. Hwang and M. L. Tamplin, "The Influence of Mayonnaise pH and Storage Temperature on the Growth of Listeria monocytogenes in Seafood Salad," *Int. J. Food Microbiol.* **102**, 277–285 (2004).

P. S. Mead, L. Slutsker, V. Dietz, L. F. McCaig, J. S. Bresee, C. Shapiro, P. M. Griffin, and R. V. Tauxe, "Food-Related Illness and Death in the United States," *Emerg. Infect. Dis.* 5 (1999). Available at: http://www.cdc.gov/ncidod/eid/vol5no5/mead.htm.

USDA, http://pmp.arserrc.gov.

USDA, http://portal.arserrc.gov.

AROMA BARRIER TESTING

Anne-Marie Seuvre
Frédéric Debeaufort
IUT Génie Biologique,
Université de Bourgogne, Dijon
Cedex, France; and ENSBANA,
Laboratoire EMMA, Université
de Bourgogne, Dijon, France

Andrée Voilley
ENSBANA, Laboratoire
EMMA, Université de
Bourgogne, Dijon, France

The aroma of a food product is the whole of the volatile compounds that may be perceived by the olfactory system at extremely low levels, which implies that a reduced loss or sorption (adsorption and/or absorption) will be detected by the consumer (1). Losses of aroma compounds can be selective (affecting one or few components in a complex mixture) and result in changes of the aromatic profile. The food industry has long depended upon reliable, impermeable packaging materials such as glass and metal. Both suppliers and food manufacturers focus research efforts into lighter-weight, flexible and semirigid packages, which are typical qualities of plastics. While parameters such as functionality, recyclability, and cost are critical characteristics, the lack of complete impermeability and inertness in these polymer materials can have important effects. Due to their size (molecular weight $<400\,\mathrm{g}\cdot\mathrm{mol}^{-1}$) and nature (very little polar until apolar and hydrophobic), the aroma compounds will interact with packaging materials often consisting of lipophilic hydrocarbons (2). Aroma compounds are able to interact with the polymer matrix, leading to polymer structural changes (3). Plastic packages are made up of polymers that form a matrix of crystalline and amorphous regions (which contain submicroscopic voids). Aromas permeate through packaging by first being adsorbed onto the package's surfaces, diffusing through the voids (absorption), and, without a barrier material, desorbed to the package's exterior. A sorption–diffusion mechanism is thus applied (4, 5). The mass transfer phenomenon, commonly described by the sorption, the migration, and the permeation can be determined by three parameters: S, the solubility coefficient; D, the diffusion coefficient; and P, the permeability coefficient (6). When diffusion is Fickian and sorption follows Henry's low, the relationship $P = D \cdot S$ can be used. Literature and knowledge on mass transfer of aroma compounds are few and no standard procedure is recommended. Methods developed for aroma compounds permeability measurements are commonly approached by isostatic or quasi-isostatic methods and depend on the physical state (vapor or liquid) of the aroma compounds (6, 7).

The issue is how to obtain results of aroma permeability of packaging films in a reasonable time-frame. Depending on the static or dynamic conditions of permeation measurement, the detection systems and the environmental conditions (temperature, pressure, flows, physical state of the aromas, etc.), numerous apparatus have been designed, to different degrees of success, to obtain this information (4, 7):

Systems can be classified as a function of:

- the vapor or liquid state of the flavored medium in contact with the packaging film;
- the static, quasi-isostatic or dynamic methods;
- or the detection or analysis systems.

The aroma compound in contact with the film can be pure or dilute in a simple solution or in the food, in a vapor state, or in a liquid state at the inner surface of the film. When the flavored medium or pure aroma compound are static (no stirring, no sweeping), the technique is qualified as static and employs an accumulation process. These methods correspond to integral permeation processes (8). In dynamic (or quasi-isostatic) systems, the flavored medium and/or medium collected for analysis are stirred or swept, and the method deals with a differential permeation in which the instantaneous flow rate through the films is measured. When the two sides of the film are exposed to the same total pressure, but with different partial vapor pressures of the aroma, the technique is qualified as isobaric.

AROMA VAPOR PERMEABILITY MEASUREMENT

One primary concern when dealing with aroma barrier testing is generating an accurate test vapor of aroma. Accurate data require precise control of the test permeant concentration in the vapor phase. Since aromas are a complex mixture, the use of an aroma as a test permeant is typically difficult. Aroma generation is usually obtained by bubbling the carrier gas through pure liquid aroma and diluting the aroma saturated carrier gas with another flow of aroma-free carrier gas or with a second flow containing an other aroma compound.

The Isostatic and Isobaric Methods

The gravimetric method is probably the most simple but one of the less accurate. It requires us to work with pure aroma compounds and then at saturated concentration of aroma in the vapor phase in contact with the film. Only a partial vapor pressure differential of the flavor compound is applied between the two faces of the film; that is, the same total pressure is applied on both faces of the film. The method consists in storing pure aroma compound in a permeation cell, usually in glass or metal, sealed by the film to study which is fixed between two Teflon O-rings. The permeation cell is stored in a ventilated room where the air is permanently renewed to maintain the lower concentration of flavor in the outside environment of the cell. The cell is periodically weighted and the cumulative mass of aroma loss as a function of time is plotted. This method is also called the integral permeation method (8). Figure 1 gives an example of the permeation cell and the kinetic obtained. This method, even when coupled with a very sensitive microbalance or a DVS system (Dynamic Vapor Sorption, Surface Measurement Systems Ltd, UK), such as done by Zhou et al. (9), is one of the less accurate (except when coupled with gas chromatography analysis) and permits us to measure permeability to only one pure compound.

The sensory method is sometimes more accurate than the gravimetric ones, and it only needs selected and trained panelists and does not required any specific equipment. First, the concentration level (threshold) at which the panelist perceived the flavor has to be measured and quantified by sensory experiments (or has to be found in the literature). Second, permeation cells having two compartments, one containing the flavor solution or flavored food and the other empty, separated by the tested film were stored in standard conditions [Figure 2 (10)]. The panelists smelt at different times. When the flavor is detected in the empty compartment, permeability could be calculated. The results obtained by this method were comparable to those obtained by the analytical method which used gas chromatography quantification. The advantage of this method is also that it uses either (a) low flavor concentrations and aroma compound mixtures because the nose is very accurate and is able to detect several flavor compounds at concentrations lower than parts per billion or (b) real food products instead of pure aroma compounds. Indeed, the nose is very accurate and is able to detect simultaneously several flavor compounds at

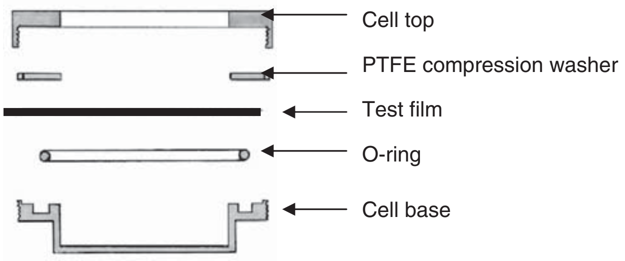

Figure 1. Permeation cell for gravimetric method and cumulative amount of aroma transferred through a film.

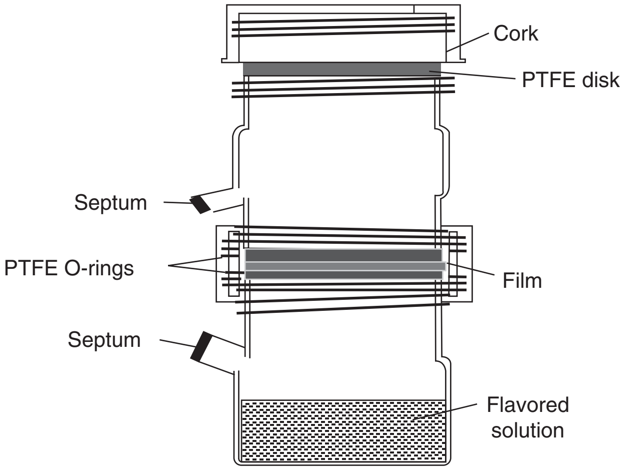

Figure 2. Permeation cell for measuring film permeability from sensory analysis. [From reference (10).]

concentrations lower than the ppb. Numerous studies demonstrate the performances (detection level and identification of aroma) of the panelists and concluded that the technical instrument's (electronic nose) capability for detecting the aroma differences was fairly comparable with the sensory human detector.

The Gas Chromatography method uses the same type of cell that is used for the sensory method. The cell is made either of glass or stainless steel, but the two chambers of the permeation cell are equipped with a sampling port having PTFE septa. The gas phase is periodically collected with a gas-tight syringe in both chambers and injected in gas chromatograph for analysis (11).

Quasi-isostatic and Isobaric Method

In this method, the cell consists of an upper and lower chamber separated by the test packaging film (Figure 3). Complete separation and closure of each chamber were accomplished with Viton or PTFE O-rings between which the film is placed. The cell is accurately maintained at the testing temperature. The pure aroma compound, or a dilute aroma solution or a real flavored product, was placed in a glass dish at the bottom of the lower cell as used by Rubino et al. (12). The RH conditions could also be controlled. A smaller dish filled with a saturated salt solution controlling the water activity was placed in the center of the aroma dish. Aroma vapor that diffused through the film was purged by a stream of carrier gas (nitrogen, helium, or argon) that flowed through the upper cell at a constant rate and that carried the permeated vapor to the gas chromatograph for measurement as displayed in Figure 3.

Isostatic with Dynamic (or Continuous) Flow and Isobaric Methods

The isostatic technique is very similar to that of quasi-isostatic and is the most used technique for measuring aroma vapor permeabilities. The material sample was also mounted in a two-chamber permeability cell, but both chambers of the permeation cell are continuously swept by the flow of gas: on one side the aroma-enriched carrier gas and on the other side the permeated low aroma concentration carrier gas (Figure 4a). As the permeant diffuses across the membrane, headspace samples are automatically collected and quantified using gas chromatography. This principle corresponds to the automatic apparatus sold for aroma permeability measurement, such as the Aromatran® (Mocon, Minneapolis, MN, USA) or the MAS2000® (Mas Technologies Inc., Zumbrota, MN, USA). Instead of FID-equipped gas chromatography analysis or detection, some authors used more specific detectors such as PDS or mass spectrometer coupled with the gas chromatograph, or UV–VIS spectrometer, FTIR or ATR–FTIR spectrometer directly coupled at the vent of the permeation cell (13).

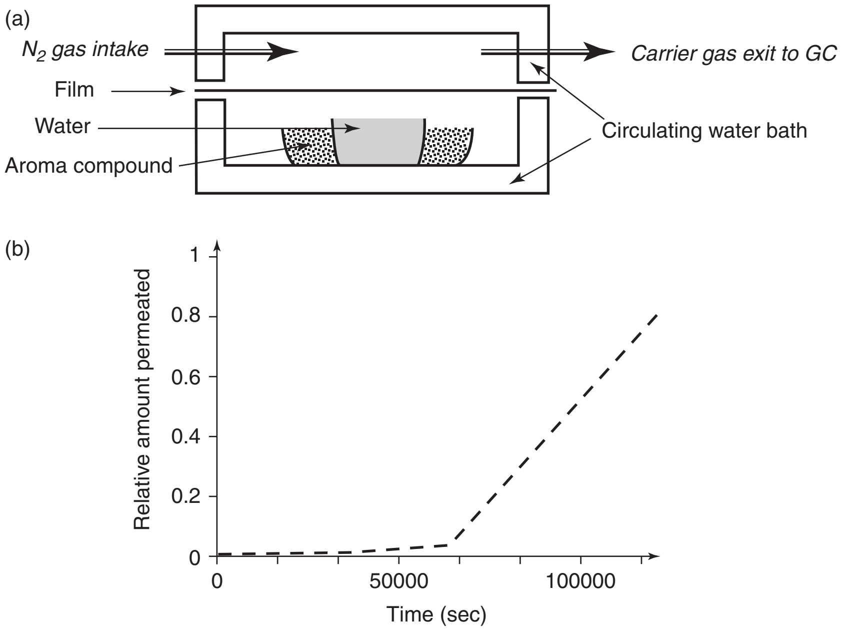

Figure 3. (a) Quasi-isostatic permeation cell (adapted from reference 12) and (b) an example of kinetic of 1-hexanol permeation through polypropylene film. [Adapted from Gavara et al. (6).]

In this method, permeant flow values as a function of time is recorded during the experiment. Initially the permeant flow is zero. After some time, permeant flow starts to increase during the transition state until it reaches a constant value. At this time, the system is in a stationary state and the experiment can be stopped. From the flow F_∞ at the stationary state, the permeability can be calculated according differential permeation equations (6, 8, 14). Figure 4b shows the data obtained for 1-hexanol through a polypropylene film (6).

To improve the sensitivity and accuracy of the isostatic method, a cold trap (liquid nitrogen) or adsorbent trap (tenax, active charcoal, etc.) can be placed at the vent of the cell to concentrate the permeated aroma compounds. After definite times, the trap is desorbed by heating and injected in a gas chromatograph as shown in Figure 5 (15–17). This is necessary for obtaining a suitable method allowing the permeability measurement of high-barrier polymer films at low permeant vapor pressures.

Static and Manometric Methods

Basically, the manometric methods measure the quantity of aroma vapor that has permeated through a test specimen in a given time, as a change in pressure and volume (18). The test specimen forms a barrier between two chambers in a permeation cell. A constant pressure of the aroma vapor is maintained in one chamber and a low pressure, usually vacuum, is initially established in the other chamber. A manometer is coupled to the low-pressure chamber and is used to measure the change in pressure and volume over a specified length of time. In order that the quantity of vapor measured be equal to that entering the polymer film, steady-state conditions must exist. This requires a period of time to lapse so that a constant concentration gradient is obtained across the film.

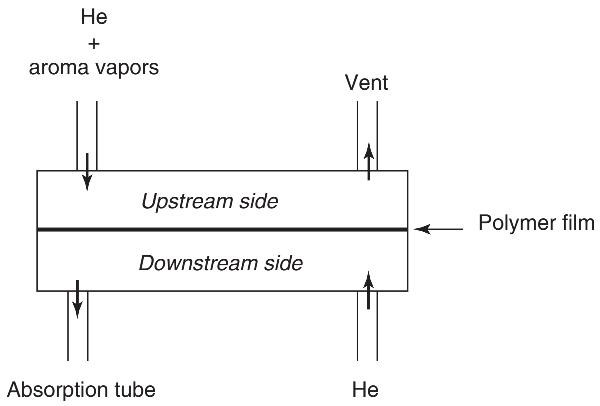

Figure 5. Improved device for the isostatic method using adsorbent trap to concentrate permeated compounds. [Adapted from reference (15).]

In the permeation device developed by Okuno et al. (19) and described in Figure 6, the permeability is determined in static conditions and for a pressure differential lower than 1 atm. This method allows us to strongly improve the sensitivity of the Lomax (18) manometric method previously described. First, the liquid (aroma compound or volatile organic compound) in the vessel was degassed as follows: After closing the valve V_1, the liquid in the liquid vessel was frozen at liquid nitrogen temperature (−196°C). Then the liquid vessel was evacuated by opening the valve V_1, and the frozen liquid was melted at ambient temperature. This procedure was repeated several times. The valves V_1, V_2, V_5, and V_6 were closed, followed by heating the liquid vessel at a certain temperature. The vapor pressure supplied to the membrane was controlled by the liquid temperature in the vessel. The permeation measurement started by opening the valve V_1.

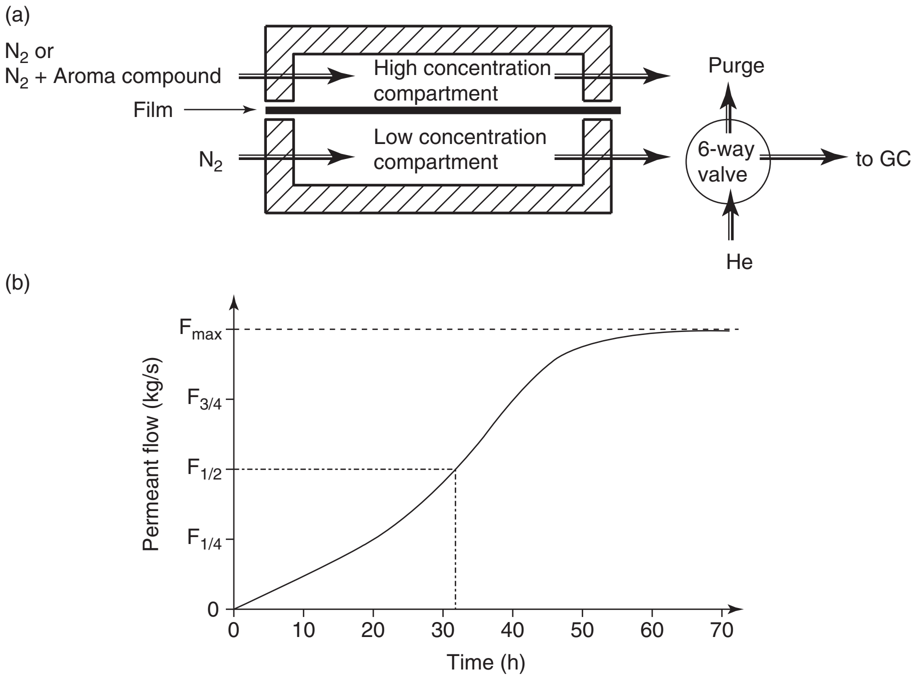

Figure 4. (a) Isostatic permeation device and (b) an example of typical kinetic of aroma permeation through polypropylene film.

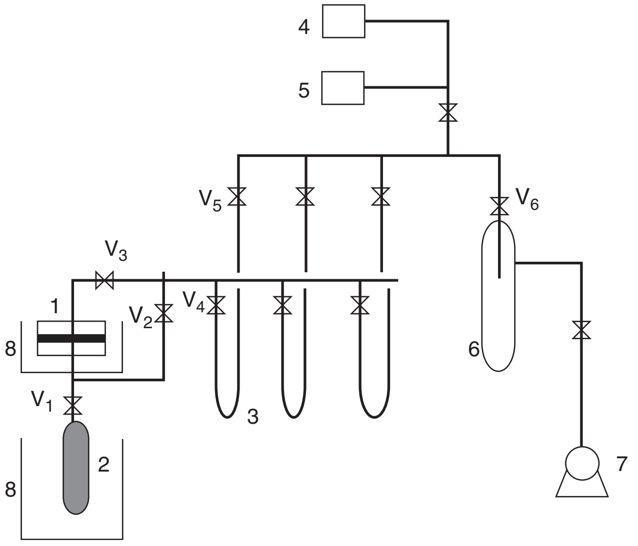

Figure 6. Permeation device for measuring permeability of organic vapors (1, permeation cell; 2, liquid vessel; 3, U-tube; 4, pressure gauge; 5, Pirani low-pressure gauge; 6, cold trap; 7, vacuum pump; 8, thermostat; V, valves). [Adapted from Okuno et al. (9).]

The vapor permeated through the membrane was collected in one the U-tube at liquid nitrogen temperature. The collected permeants were vaporized in the U-tube disconnected from the system by closing the valve V_4. The valve V_5 was opened and then the pressure of the permeated aroma vapor in a known volume is measured by the pressure gauge 5. During the above pressure measurement, another U-tube was used to collect the permeated vapors. The steady state of permeability of the vapor was determined by repeating this procedure. If several compounds and mixed and studied simultaneously, the composition of the permeate has to be analyzed by gas chromatography. The main limit of this method is that the permeability value is strongly dependent of the vapor pressure applied at the inner surface of the membrane, and of the efficiency of the cold trap, as shown in Figure 7 where the permeability of a PVC sheet to ethanol varies twice according the ethanol vapor pressure used.

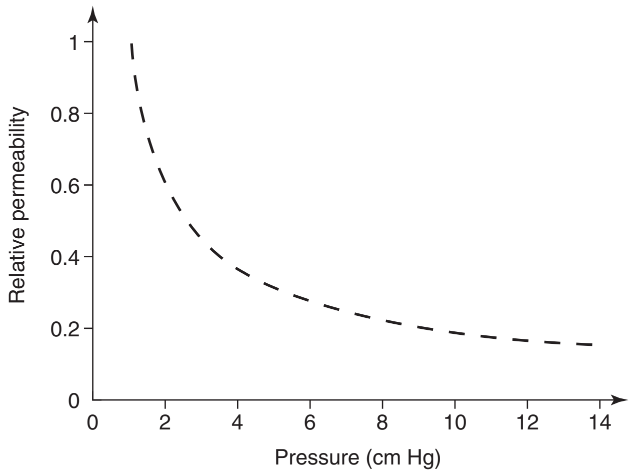

Figure 7. Effect of vapor pressure on permeability of ethanol vapor through a PVC membrane. [Adapted from reference (18).]

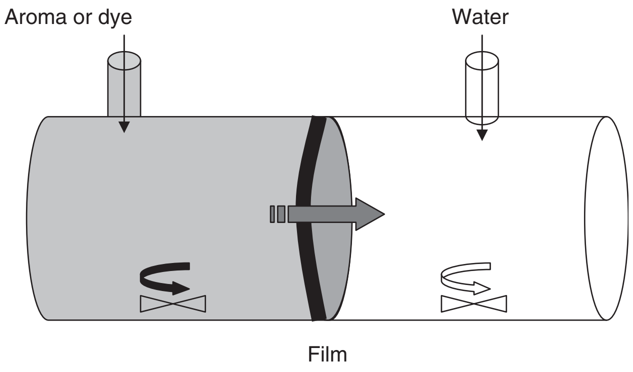

Figure 8. Experimental design for measuring permeability of aroma compounds (or dye compound) in packaging films.

AROMA LIQUID PERMEABILITY MEASUREMENT

Quasi-isostatic Isobaric Method

The permeability of packaging films in liquid medium is simply determined using a two-compartment glass diffusion cell (20). The two compartments were separated by the film and were continuously stirred with a magnetic stirrer to ensure homogeneity of the solutions on both sides of the film. The permeate concentration can be measured by gas chromatography analysis or, in the case of Figure 8, by fluorescence spectrometry.

This method was also adapted for measuring the permeability of a complete package, taking into account the sealing zone, and using a continuous measurement of the permeated aroma concentration by UV–VIS spectrophotometer such as done by Gotz and Weisser (21) and shown in Figure 9.

Static High-Pressure Method

Gotz and and Weisser (21) designed a permeation device for measuring permeation of packaging in liquid submitted

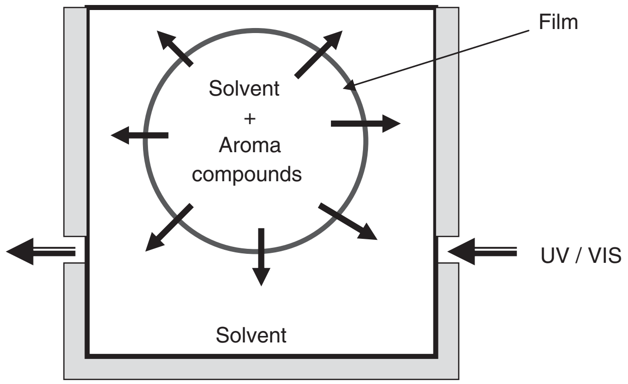

Figure 9. *In situ* permeability measurement of aroma in liquid medium. [From reference (21).]

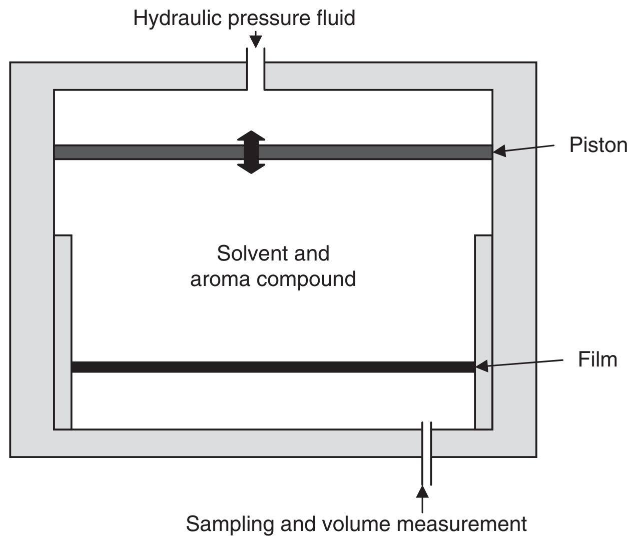

Figure 10. Experimental design of a liquid permeation cell under high pressure. [Adapted from Gotz and Weisser (21).]

to high pressure. A two-compartment permeation cell was integrated in a high-pressure autoclave (Figure 10). The bottom of a compartment of the cell is moving like a piston to apply high pressure on the liquid in contact with the film. The pressure p_0 of the hydraulic fluid (water/glycol) is applied by a piston to the lower region of the autoclave filled with water. Another piston separates the water from the aroma–solvent (water/ethanol) solution. After the pressure is built up, the cell is rinsed again in order to obtained the amount of aroma that permeated at $p_{\max} = p_0$ through the film. The end of the rinsing defines the beginning of the holding time. After the holding time, the cell is rinsed again with the solvent out of the reservoir. The amount permeated and then the liquid permeability is determined by GC analysis of the solvent after holding time.

Dynamic Isobaric Method

The rotating diffusion cell is designed hydrodynamically so that stationary diffusion layers of known thickness are created on each side of the film (Figure 11). The flux of aroma compound from the inner compartment across the film was measured by periodically sampling with a micro syringe from the solution in the outer compartment and analyzed by GC. The rotating diffusion cell method enables us to carry out a study on the mass transfer of solutes from a liquid phase to another liquid. The fundamental theory of the Levich model (22) provides the means of aroma compound transfer from the inner to the outer compartment by the overall permeability of aromas but also the aroma diffusivity within the film packaging and the interfacial resistances.

SORPTION METHODS

There are many works focused on the determination of aroma mass barrier which are based on sorption experiments. The retention or the release of substances is monitored during the experiment. This evolution can be followed by gravimetry (DVS, electrobalances, spring balances), by manometry, by GC or HPLC, and so on. Figure 12 (24) presents aroma compound sorption kinetics. The quantity of aroma compounds adsorbed by the film during transient state of the mass transfer was often obtained using a modified microatmosphere method. Dried films cut into small pieces were exposed to atmospheres saturated with pure or dilute aroma compound. This atmosphere was usually conditioned at 0% relative humidity and continuously swept with a carrier gas (helium) containing a known vapor concentration of aroma compounds. The atmosphere inside the flask containing the film was kept at a constant aroma concentration. The total amount of volatile compound sorbed at a given time until constant Q was determined after solvent extraction such as n-hexane (for which extraction yield is 97%) of a film sample

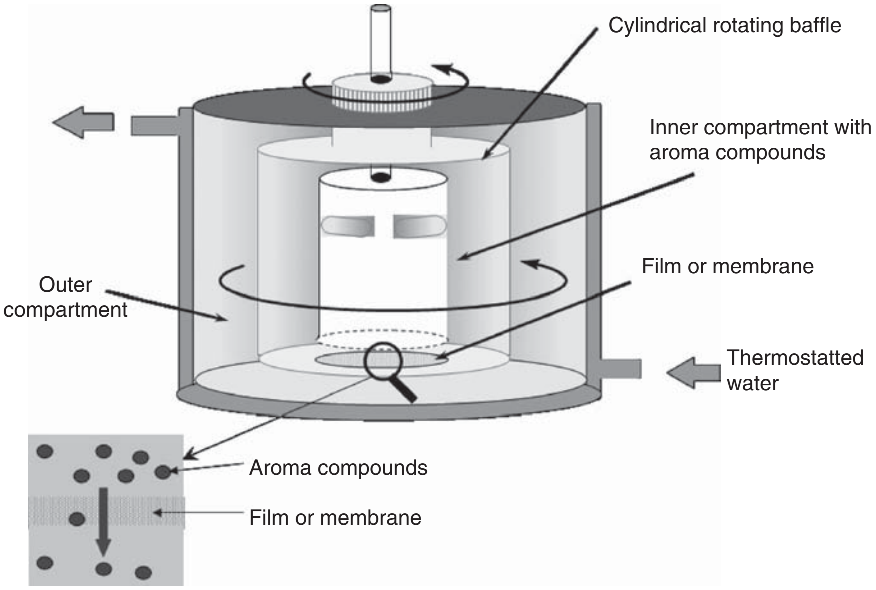

Figure 11. Rotating diffusion cell for measuring permeability of aroma compound between two liquid phases. [Adapted by Debeaufort from works of Rogacheva et al. (23).]

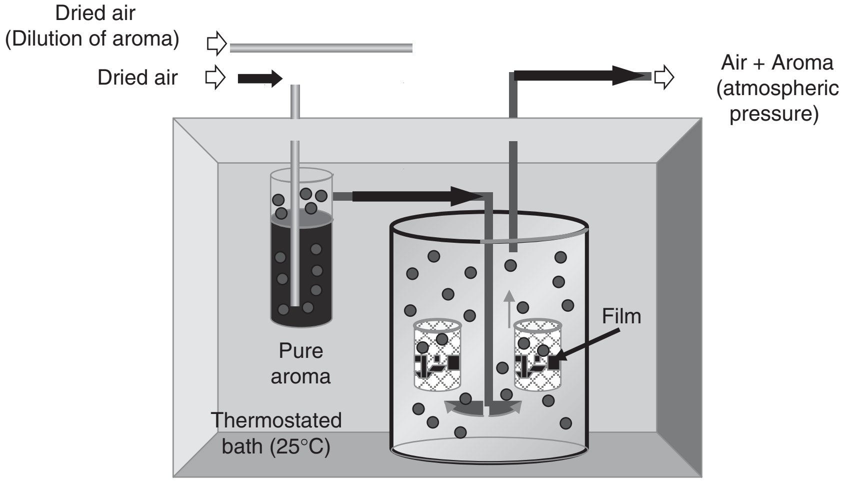

Figure 12. System to determine aroma compound sorption kinetics (micro-climate method).

and by injection of the resulting aroma solution in a gas–liquid chromatograph (GLC). The quantities of aroma compounds adsorbed in the films are expressed as $\mu g \cdot mL^{-1}$ of dry film. The aroma flux was defined as the ratio of the weight of permeated vapors (g) to the product of exposed area (m^2) and time (s). The flux was expressed as $g \cdot m^{-2} \cdot s^{-1}$. In practice, permeability P and solubility coefficients S are calculated from the following equations:

$$P = F/\Delta p \cdot e \quad \text{and} \quad S = Q/\Delta p$$

where F is the transfer rate ($\mu g \cdot m^{-2} \cdot s^{-1}$), Δp is the vapor partial pressure gradient, e is the film thickness (m), and Q is the quantity of volatile compound sorbed in the film ($\mu g \cdot mL^{-1}$).

The diffusion coefficient can be calculated from the half-time method of sorption experiment (Figure 13), designating the time $t_{1/2}$ at which the transfer rate is equal to half of the transfer rate at the steady state obtained by a differential permeation method (5, 8, 25) or from numerical solution of Fick equations. The diffusion coefficient (D) was calculated using the equations

$$D = \frac{e^2}{7.199 t_{1/2}}$$

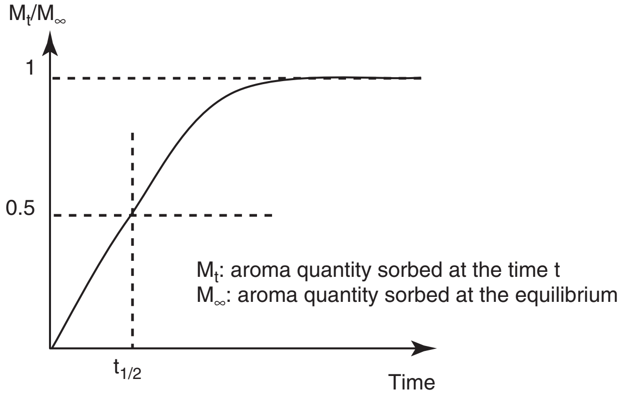

Figure 13. The half-time method of diffusivity determination from sorption kinetics.

and

$$\frac{M_\infty - M_t}{M_\infty - M_0} = \frac{8}{\pi^2}\sum_{n=1}^{\infty}\frac{1}{(2n-1)^2}\exp\left[-\frac{(2n-1)^2\pi^2 Dt}{4e^2}\right]$$

where M_t is the aroma quantity sorbed at the time t, M_∞ is the aroma quantity sorbed at the equilibrium, and M_0 is the initial aroma quantity in the film sample.

The measurements methods of sorption are often used to search the affinity properties of the aroma compounds. These methods can also be used to determine diffusion and then the permeability from the sorption kinetics. But permeability can be only estimated from the sorption method when the Henry and Fick's laws are obeyed. This calculation applies only in the absence of strong interactions between the volatile compound and the polymer– that is for a constant diffusivity and a linear sorption isotherm.

BIBLIOGRAPHY

1. H. Maarse, *Volatile Compounds in Food and Beverages*, Marcel Dekker, New York, 1991.
2. J. Ylvisaker, "The Application of Mass Transport Theory to Flavor and Aroma Barrier Measurement," *Tappi Polymers, Laminations & Coatings Conference Proceedings*, 1995, Book 2, p. 533.
3. P. T. DeLassus, "Permeation of Flavors and Aromas through Glassy Polymers," *Tappi J.*, **77**(1), 109 (1994).
4. W. E. Brown, Plastics in Food Packaging: Properties, Design and Fabrication, Marcel Dekker, New York, 1992.
5. J. Crank, *The Mathematics of Diffusion*, 2nd edition, Oxford University Press, New York, 1975, pp. 32, 52.
6. R. Gavara, R. Catala, P. M. Hernandez-Muñoz and R. J. Hernandez, *Packag. Technol. Sci.* **9**(4), 215–224 (1996).
7. R. M. Felder and G. S. Huvard, *Methods of Experimental Physics*, Vol. 16c, Academic Press, New York, 1980, pp. 324, 344.
8. R. M. Felder, *J. Membr. Sci.*, **3**, 15–27 (1978).
9. Q. Zhou, B. Guthrie, and K. R. Cadwallader, *Packaging Technol. Sci.*, **17**(4), 175–185 (2004).
10. F. Debeaufort and A. Voilley, Second International Symposium on Food Packaging: Ensuring the Safety and Quality of Food, Vienna, Austria, November 2000.

11. M. G. Kontominas, *Sci. Alim.* **5**(2), 321–329 (1985).

12. M. Rubino, M. A. Tung, S. Yada, and I. J. Britt, *J. Agric. Food Chem.* **49**(6), 3041–3045 (2001).

13. D. Cava, R. Catala, R. Gavara, and J. M. Lagaron, *Polym. Testing* **24**, 483–489 (2005).

14. F. Debeaufort and A. Voilley, *J. Agric. Food Chem.*, **42**(12), 2871–2876 (1994).

15. A. Nestorson, A. Leufven, and L. Järnström, *Polym. Testing* **26**, 916–926 (2007).

16. R. Franz, *Packag. Technol. Sci.* **6**, 91–102 (1993).

17. A. G. Wientjes, H. Maarse, and S. A. Van Straten, *Lebensmittel Hunters Hyg.*, **58**(1), 61–70 (1967).

18. M. Lomax, *Polymer Testing* **1**, 105–147 (1980).

19. H. Okuno, K. Renzo, and T. Uragami, *J. Membr. Sci.,* **103** (1–2), 31–38 (1995).

20. I. Bodnar, A. C. Alting, and M. Verschueren, *Food Hydrocoll.* **21**(5–6), 889–895 (2007).

21. J. Gotz and H. Weisser, *Innov. Food Sci. Emerging Technol.* **3**, 25–31 (2002).

22. V. G. Levich, *Physico-chemical Hydrodynamics*, Prentice-Hall, Englewoods Cliffs, NJ, 1962.

23. S. Rogacheva, M. A. Espinosa-Diaz, and A. Voilley, *J. Agric. Food Chem.* **47**(1), 259–263 (1999).

24. J. A. Quezada-Gallo, F. Debeaufort, and A. Voilley, *J. Agric. Food Chem.* **47**(1), 103–108 (1999).

25. R. R. Chao and H. H. Rizvi, in J. H. Hotchkiss, ed., *Oxygen and Water Vapor Transport through Polymeric Films: A Review of Modeling Approach*, Food and Packaging Interactions 365, American Chemical Society: Washington, DC, pp. 216–242, 1988.

B

BAG-IN-BOX, DRY PRODUCT

Gilles Doyon
Agriculture & Agri-Food
Canada, Ministry, Saint-
Hyacinthe, Quebec, Canada

When the bag-in-box concept is applied to dry products, it generally involves a bag inside a folding carton (see Cartons, Folding). In order to appreciate the impact of the bag-in-box (BIB) concept for dry products, one must understand the history of the folding carton. The turn of the century marked the first use of the folding carton as a package when National Biscuit Company introduced the "Uneeda Biscuit" (soda cracker). Instead of opting for the conventional bulk method of selling crackers, Nabisco decided to prepackage in smaller boxes, using a system that would prolong freshness. The paperboard carton shell with creased score line flaps had recently been developed, along with a method for bottom and top gluing on automatic machinery (see Cartoning machinery). Waxed paper (see Paper; Waxes) was to be added manually to the inside of the carton. So was born the "lined carton."

The evolutionary process eventually culminated in two basic methods of producing lined cartons. The first was a machine to automatically open a magazine-fed side-seamed carton and elevate it around vertically indexed mandrels where glue is applied to the bottom flaps and folded up against the end of the mandrel with great pressure. The result is a squarely formed open carton with a very flat bottom surface capable of being conveyed upright to a lining machine that plunges a precut waxed-paper sheet into it by a system of reciprocating vertical mandrels. The lining is overlapped at the edges and sealed together to form an inner barrier to outside environmental factors. It protrudes above the carton top score line by a sufficient amount of paper to be later folded and sealed at a top-closure machine. Straight-line multiple-head filling machines are used to fill premeasured product into the carton. Initial fill levels are often above the carton-top score line and contained within the upper portion of the lining, which eventually settles with vibration before top sealing takes place. This fact has relevance with respect to the bag-in-box concept.

The second method involves the use of a double-package maker (DPM), which combines the carton forming/gluing operation with a lining feed mechanism that wraps the lining paper around a solid mandrel prior to the carton feed station. In this instance the carton blank is flat and is side-seamed on the DPM. The lined carton is then discharged upright onto a conveyor leading to the filler and top closing machine.

These packaging lines are typically run at up to 80 packages per minute (in some special cases 120/min). They are considered to be very complex machines requiring skilled operating personnel and are usually restricted up to a single size.

Although the time reference is rather vague, it would appear that the bag-in-box concept began with the refinement of vertical form/fill/seal (VFFS) machinery in the 1950s (see Form/Fill/Seal, Vertical). Packaging machinery manufacturers and users saw an alternative to the DPM in the horizontal cartoner coupled with VFFS equipment. The idea of automatically end-loading a sealed bag of product into a carton offers the following important advantages compared to lined cartons: simplicity (i.e., fewer and less-complicated motions); flexibility (i.e., size changes more easily and quickly accomplished); higher speed (i.e., up to 200 packages per minute is theoretically possible with multiple VFFS machines in combination with a continuous-motion cartoner); lower packaged cost (i.e., higher speeds and lower-priced machinery); improved package integrity (i.e., bags are hermetically sealed using heat-seal jaws); reduced personnel (i.e., possible for one operator to run line); requires less floorspace (i.e., more compact integrated design); and wider choice of packaging materials (i.e., unsupported as well as supported films can be handled).

Although bags are sometimes inserted manually, the high-speed methodology (see Figure 1) employs multiple VFFS machines stationed at right angles to the cartoner infeed, dropping filled and sealed bags of product onto an inclined conveyor that carries them to a sweep-arm transfer device for placement into a continuously moving bucket conveyor. The VFFS machines are electrically synchronized with the cartoner, and the transfer device is mechanically driven by the bucket conveyor. When the bag reaches the carton-loading area, it is gradually pushed out of the bucket by cammed push rods through guides and into the open mouth of the box which is contained within chain flights traveling at the same speed adjacent to the bucket. A guide plate drops into the bucket from overhead to confine the bag during insertion into the box. Once the bag is in the box, the end flaps are glued and rail closed before entering compression belts for discharge to the case packer.

When difficulties occur in this system, it is usually at the insertion station, caused by misshaped or rounded bags with a girth larger than the carton opening. An attempt is made to condition the bag on the inclined conveyor by redistributing the product within the bag more evenly and, once in the bucket, by vibrating tampers to flatten it. However, if there is too much air entrapment in the bag, or a high product fill level, or an improperly shaped bag, these devices become futile. Increasing the carton size would be a simple solution, but the packager is often not free to do this. Marketing departments are generally reluctant to change the size of a carton that has been running satisfactorily on DPM equipment. The main problem is that the BIB manufacturer must allow more clearance of bag to box than is required on a close-fitting lining. The usual BIB bag-sizing rule of thumb is a

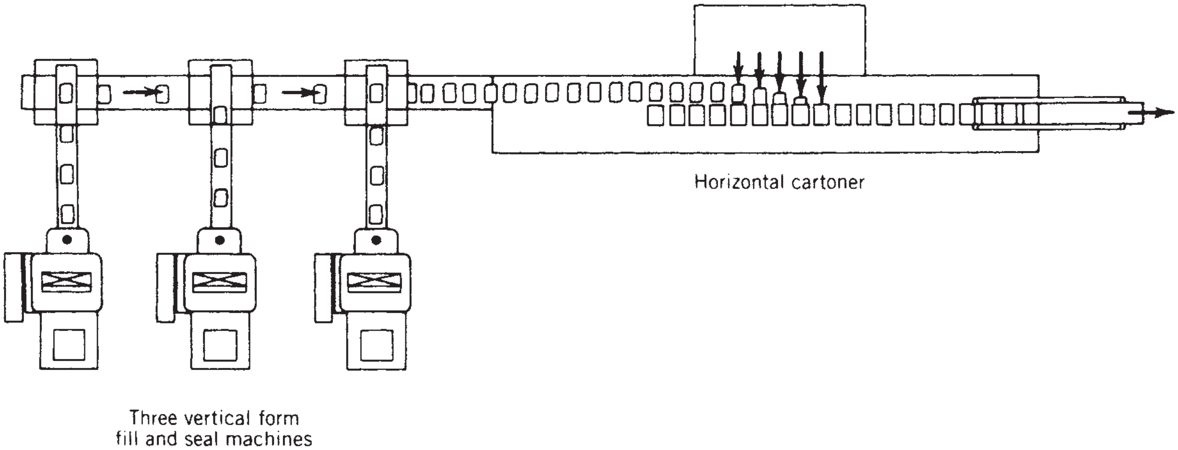

Figure 1. Bag-in-box packaging system with horizontal cartoner.

gusseted bag having a width $\frac{3}{6}$ in. (9.53 mm) less than the carton face panel and $\frac{1}{4}$ in. (6.4 mm) less than carton thickness. This can vary somewhat, but the bag must be small enough to transfer positively into the bucket and subsequently into the box without interference.

One manufacturer has attempted to deal with the problem by wrapping the carton blank around the bucket after the bag has been top-loaded into it (see Figure 2). In wraparound cartoning, flat blanks are used and glue is applied to the manufacturer's joint and side-seamed against the mandrel by rotating-compression bars. The mandrel/bucket is withdrawn, leaving the bag in the box ready for flap gluing and closing. This approach is more forgiving than end-loading, but is still susceptible to bag-sizing problems because additional clearance must be allowed to compensate for the gauge of the three-sided bucket walls. Speeds of ≤ 140 per minute are possible.

The vertical load concept has gone a long way toward overcoming bag insertion problems (see Figure 3). It relies on simple gravity and special bag-shaping techniques to drop the bag directly into the box from a film transport-belt-driven type of VFFS machine. The carton shell is formed from a flat blank and bottom glued on a rotary four-station mandrel carton former. The upright carton is conveyed to a starwheel-timed flighted chain indexing device to position it squarely under the VFFS rectangular forming tube. Two VFFS machines with electronically synchronized motor drives operate independently of the carton former. A prime line of empty cartons initiates the operation of each VFFS machine.

The bag-forming parts consist of a rectangular-forming shoulder and tube that has been manufactured to produce a bag with cross-sectional dimensions $\frac{1}{4}$ in. (6.4 mm) less than carton face panel and $\frac{1}{6}$ in. (3.2 mm) less than the side panel. This very close fit is made possible by a combination of several mechanisms. First a gusseting device creates a true flat-bottom bag using fingers that fold in the film from the sides as contoured cross-seal jaws close on the bag. The bottom of the rectangular forming tube is within $\frac{1}{4}$ in. (6.4 mm) of the seal jaws and acts as a mandrel around which the bag bottom is formed. The bag is thereby given a sharply defined rectangular shape, which is maintained as it is filled with product and lowered through a shape-retaining chamber. This chamber is vibrating so as to present a moving surface to the bag to reduce frictional

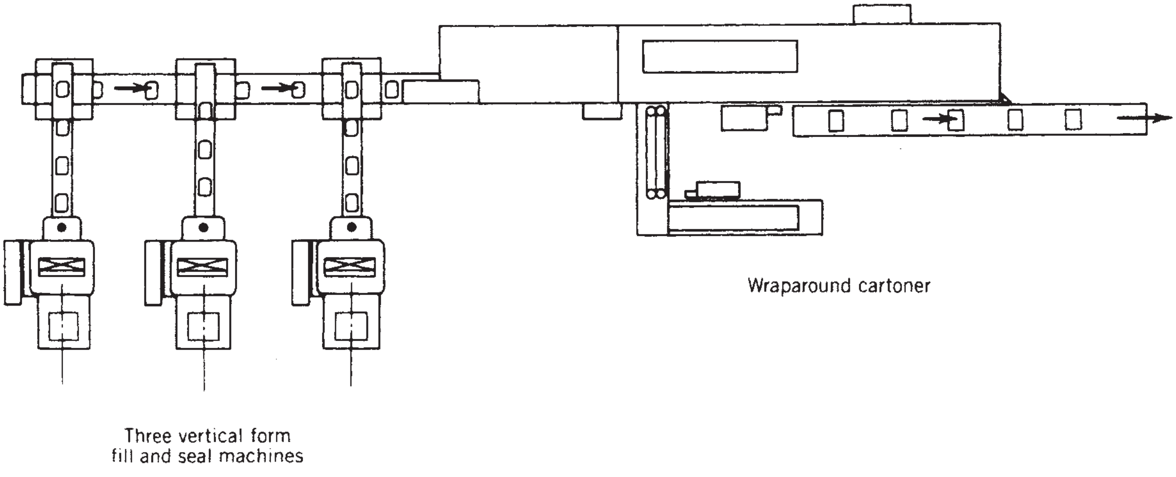

Figure 2. Bag-in-box packaging system with wraparound cartoner.

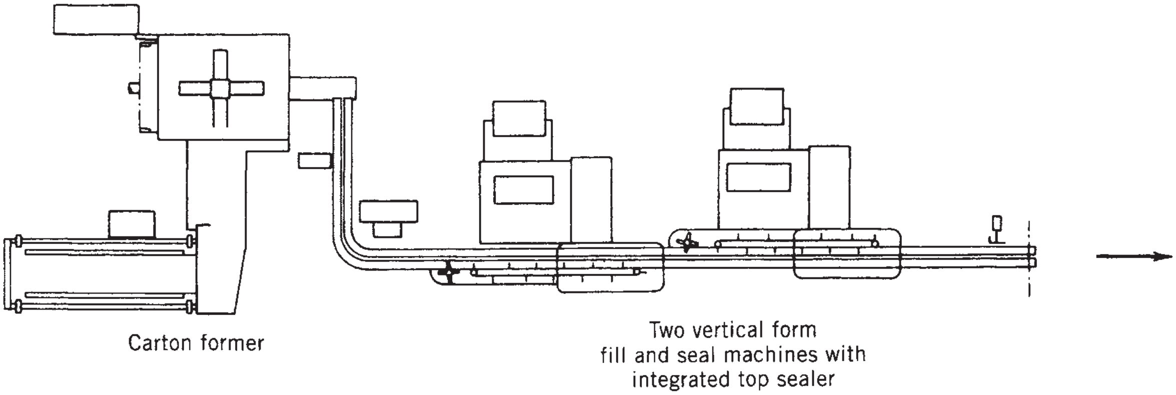

Figure 3. Bag-in-box packaging system with mandrel carton former.

contact and, more important, to settle the product before the top seal is made. Since the bag is confined and not allowed to round out, headspace between product and top seal is kept to a minimum, thereby reducing air entrapment to manageable levels. Flap spreaders ensure that there is unobstructed access into the box.

The shaped filled bag slips freely into the box, allowing the four corners of the bag to settle snugly into the bottom, making maximum use of available volume. The bag cutoff is determined by product fill level and, if necessary, can be made so that the top seal protrudes over the score line by several inches. (centimeters) when fully seated in the box, which is neatly pressed down at the next station. While the carton is contained in the flighted chain, it is indexed through a top sealer where hot-melt glue is applied to the flaps, which are railed over before passing under compression rollers. The top sealer is integrated mechanically and electrically with each VFFS machine, and because the operation is performed immediately after bag insertion, the carton never has a chance to bulge, which is eventually important for efficient case packing.

This packaging system is rated at up to 100 cartons per minute, and two lines can be mirror-imaged for higher speeds. A recent adaptation of the vertical-load system integrates a carton erector for side-seamed blanks with one VFFS and a top-and-bottom gluer into a single compact module rated at up to 50 boxes per minute.

Another BIB system close-couples a carton former (preglued or flat blanks) with a pocket conveyor that indexes the box to a series of bag insertion, filling, sealing, and carton top/bottom gluing stations. The bag is formed using vertical form/fill techniques utilizing a rectangular forming tube. A unique gripping mechanism engages the bottom seal of the bag and pulls it into the box from underneath. The bag top is left open to be filled with product at succeeding stations. This system offers the advantages of multiple-stage filling for optimum accuracy, checkweighing, and settling before the bag top is sealed. This is a very effective way of dealing with the problem of high fill levels. Outputs of 65–80 packages per minute are claimed for this type of machinery.

RELATED CONCEPTS

A field that has grown is institutional bulk packaging of large quantities of product in 10 to 20-lb (4.5 to 9.1-kg) sizes which usually require corrugated-box materials (see Boxes, Corrugated). The VFFS unit is an expanded machine capable of producing large deeply gusseted bags and is usually set up for vertical bag loading. Speeds are in the range of 15–30 cartons per minute. In a related process, not technically "bag-in-box," horizontal pouch (three-side-seal) machines are close-coupled to a cartoner to automatically insert one or multiple pouches into a carton at high speeds.

BIBLIOGRAPHY

N. H. Martin, Jr., "Bag-In-Box, Dry Product" in *The Wiley Encyclopedia of Packaging Technology*, 1st edition, John Wiley & Sons, New York, 1986, pp. 24–26.

General Reference

S. Sacharow, *A Guide to Packaging Machinery*, Books for the Industry and the Glass Industry Magazine, Divisions of Magazines for Industry, NewYork, 1980, 191pp.

BAG-IN-BOX, LIQUID PRODUCT

Jim Arch
Scholle Corporation

Gilles Doyon
Marco Lagimonière
Agriculture & Agri-Food
Canada, Ministry, Saint-
Hyacinthe, Quebec, Canada

Bag-in-box is a form of commercial packaging for food and nonfood, liquid and semiliquid products consisting of three main components: (a) a flexible, collapsible, fully sealed bag made from one or more plies of synthetic films; (b) a closure and a tubular spout through which contents are filled and dispensed; and (c) a rigid outer box or container, usually holding one, but sometimes more than one, bag (see Figure 1).

The bag-in-box concept appeared in the United States in the late 1950s. As early as 1957 (1), the package was introduced into the dairy industry in the form of a disposable, single-ply bag for bulk milk. By 1962, it had gained acceptance as a replacement for the returnable 5-gal (19-L) can used in institutional bulk-milk dispensers (2). One of the first nonfood items to be offered in a bag-in-box package was corrosive sulfuric acid used to activate dry-charge batteries.

During this early period, bags were manufactured from tubular stock film by labor-intensive methods. Initially, the physical properties of monolayer films (chiefly low-density polyethylene homopolymers) limited the applications, and filling equipment was slow and often imprecise. This situation changed significantly with the introduction in the 1960s of ethylene–vinyl acetate (EVA) copolymer films that provided added sealability and resistance to stress and flex cracking. By 1965, faster, dual-head fillers became available featuring semiautomatic capping capabilities. Developments in automated box forming and closing kept pace. Also, by 1965, proprietary bag-manufacturing equipment capable of making bags from single-wound sheeting sealed on all four sides had been developed (see Sealing, heat). In the mid-1970s, filling machines that automatically loaded filled bags into boxes came on-line. This was followed by totally automatic filling equipment that accepted a continuous feed of bags in strips (3), separated, filled, and capped them, then placed them in outer boxes. Meanwhile, barrier films (4) (see Barrier polymers) with improved handling and storage characteristics were being developed. Multilayer films of polyethylene coextruded with polyvinylidene chloride or PVDC to provide an oxygen barrier had become commercially available as Saranex (Dow Chemical Co.) in the early 1970s (see Vinylidene chloride copolymers). The application of this barrier film permitted packaging of oxygen-sensitive wines and highly acidic foods such as pineapple and tomato products. Beginning in 1979, multiple-ply laminates (5) (see Multilayer flexible packaging) combining foil (aluminum) or metallized polyester substrates were introduced and were also in wide use by 1982 (see Film, polyester). Such laminations are thermally or adhesively bonded and in some instances by hot melt extruding the adhesive layer (see Adhesives; Extrusion coating). The most commonly used barrier film in the United States today is a three-ply laminate consisting of 2-mil (51-μm) EVA/48-gauge (325-μm) metallized polyester/2-mil (51-μm) EVA. The barrier properties of metallized polyester are directly proportional to the optical density (OD) of the metal deposit. Multilayer coextruded films combining the barrier properties of ethylene–vinyl alcohol copolymer (EVOH), the strength of nylon, and sealability of linear low-density polyethylene are being successfully used for some bag-in-box applications. It is the sensitivity to moisture by EVOH that is limiting the films' wider use (see Ethylene-vinyl alcohol; Nylon; Polyethylene, low density).

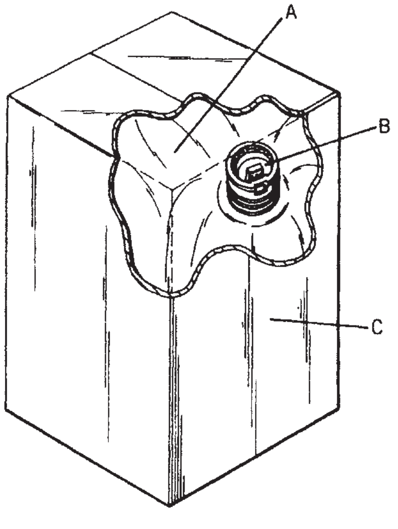

Figure 1. A bag-in-box package for liquid products consists of a bag (A), a closure and tubular spout (B), and a rigid outer container (C).

Fully automatic filling machines with as many as six heads (6) handling up to 40 two-liter ($\sim$2 qt) bags per minute are in operation. Films have been refined and specialized to meet tight packaging specifications for such procedures as hot fill at 200°F (93.3°C) temperatures. Bags are also presterilized by irradiation for filling with a growing number of aseptically processed products for ambient storage without preservatives (see Aseptic packaging). Outer boxes have become not only stronger, but more attractive and appealing as consumer sales units.

MANUFACTURING PROCESS

In general, large producers of bag-in-box packaging design, develop, and manufacture packages to specifications meeting customer requirements. Containers vary in capacity from small, consumer and institutional sizes 1 qt to 5 gal (or 2–20 L), to large, process and transportation packs of 52–312 gal (or 200–1200 L).

A corrugated board box for enclosing a flexible, collapsible bag with a closed spout is described (1997). The box may be used to deliver soft drink syrups, milk, water contained in plastic pouch (7). The next invention (8) relates to post-mix dispensers of the type using peristaltic pump located below a bag-in-box package of concentrate (1997). Novel use of oxygen-scavenging compositions in packaging material that comprise a gas and vapor barrier-forming layer or coating is introduced (1998) and disclosed (9). Applications could be for carton, bag-in-box, thermoformed trays or cups, over-wraps, shrink-wraps, closure liners, and cans. More recently (2000), an improved bag-in-box packaging system for storing, transporting, and dispensing liquid products such as chemicals, soft drink syrup, fruit juices, and food condiments is patented (10). It allows for more complete drainage of the liquids. An improved bag-in-box packaging has a shell surrounding the carton (11) that can be separated to form a stand for the carton (2004) is presented. It facilitates dispensing of the beverage from the bag by allowing glasses and cups to be placed on the table under the tap, eliminating the need to use two hands to fill the glass. A multipurpose four-sided sealed bag with a bag-in-box container system for viscous or powdery (particulate) products as vegetable oils, syrups, salad dressings, peanut butter, or soy sauce is described (12). The method of producing and using the bag are also included (2004). A bridge and adapter system for filling a bag-in-box packaging with liquids, solids, and semisolid products is claimed to provide a quick connection between the supply line and the dispensing part of the packaging (13). The bridge can be made of food grade stainless steel, plastic, or aluminum (2004). A collapsible flexible liner for a bag-in-box container system or flexible intermediate bulk container (FIBC) is detailed (14). The liner is designed to prevent unwanted collapsing of the liner during filling or draining (2005). It is also suitable for shipping various products including powder detergent. A new bag-in-box beverage container and dispenser is patented (15, 16), which incorporates (a) an outer shell preferably fabricated from corrugated paperboard material and (b) an inner liquid-containing bag fabricated from a suitable material (2006). A recessed handle is also provided. Finally, a bag-in-box for containing and dispensing liquids (e.g., beverages) is described (2006). The interior surface of the bottom of the box preferably slopes downwards toward the spout of the bag and/or has terraces, curves, corrugations, fan-like ridges, or beams to help feed the liquid toward the spout (17). The invention may also be used to advantage in other liquid dispensing applications.

Bag

The principal considerations in choosing a film laminate or coextruded for the bag construction are strength and flexibility, with low permeability and heat resistance added critical factors in an increasing number of applications. In the case of laminates, the bond between the layers of dissimilar materials must be maintained at a high level. Minimum requirements of over 1.1 lbf (500 gf) per inch (2.54 cm) (i.e., ~193 N/m) is not uncommon. Films, laminates, and coextruded have to be resistant and must also, of course, be compatible with the product from which they are in direct contact with.

Once the appropriate film compositions have been determined for a specific application, the typical manufacturing procedure is as follows: Referring to Figure 2, two or three pairs of rolls of single-wound sheeting (A) are unwound on a machine where the webs advance intermittently, holes are punched (B), and spouts are sealed (C) into one of the duplex or triplex film sheets at predetermined points depending on finished size, and the bags are formed by sealing the two films together along the sides (D) and then at the ends (E). Therefore, the bags for liquids are of a "flat" nature, not gusseted. Because precise time and temperature must be maintained to generate the seal between the thin films, the uneven thickness resulting from wrinkles or folds must be avoided because the resulting "darts" will not be fully sealed. A removable closure is applied to the spout (F), and after passing by the draw rolls (G) the bags are either cut apart as the final operation or are perforated (H) for subsequent machine separation at time of filling.

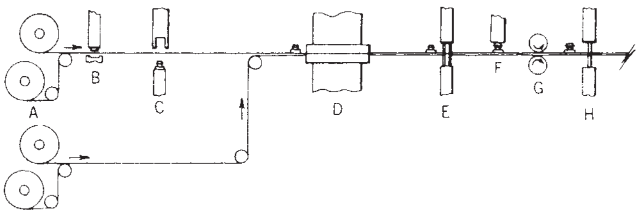

Figure 2. Typical bag-in-box manufacturing procedure.

Bag Size

The box size must be measured first, and then the exact sizing of the inner bag can be determined with respect to capacity or desired volume. The bag must occupy virtually all of the interior space of the box without unfilled corners or potentially damaging excess headspace resulting from an oversize box. The relationship between the effective surface area in contact with atmospheric air from the bag-in-box and the volume capacity is important, as well as, the residual air bubble inside. Referring to Table 1, one can demonstrate by doing some rapid calculations that a better shelf life for larger bag-in-box capacity is anticipated for similar bag structure. Furthermore, variability of the bubble diameter or its out-of-control specification per type of volume capacity is a good visual tool for quality control (QC) procedures and automatic filling machine adjustment.

Spout and closure

The spout is the filling port of the bag. Together with the closure, they are designed to mate with filling heads and must be able to withstand the mechanical shock of the closure being removed and replaced during the filling operation without damage to the spout or closure. Spouts are generally molded of polyethylene with a thin flexible flange to which the bag film is sealed. The spout has handling rings for holding the spout during the filling sequence, and the closure likewise has rings for the same purpose. Figure 3 shows the filling head in the fill position. The closure (A) has been removed and lifted up and away at an angle permitting the filling nozzle (B) to come downward and enter the spout (C) that is being held firmly in position. Because the design of bag-in-box packages provides for the contents always to be in contact with the spout, the spout-closure fit must be leakproof. When high oxygen-barrier property is essential, the spout and closure appear as the weakest area of the global bag + spout/closure structure, even though the valve is now of high barrier material. The oxygen ingress remains important unless the tightness or snugness of the spout/closure is ensured. This is a mechanical fit with tight

Table 1. Bag-in-Box (BIB) Capacity, Effective Surface Area, and Equivalence per Unit of Volume

Capacity (BIB)	2 L (2.10 qt)	3 L (3.15 qt)	4 L (4.20 qt)	10 L (10.5 qt)	20 L (21.0 qt)
Mean surface. cm^2 or [in.^{2}]	1376 [213]	1546 [240]	2140 [332]	3941 [611]	5838 [905]
Surface equivalent cm^2/L or [in.^{2}/qt]	688 [101]	515 [76]	535 [79]	394 [58]	292 [43]

Conversion units used in this paper are
0.001 in. = 1 mil = 25.4 μm (micrometer)
1 cm^2 = 0.155 square inch (in.^{2})
1 Liter (L) = 1.05 US quart (qt)
1 L = 0.26 US gallon (gal)
1 US gal = 3.79 L

specifications. Their behavior with respect to temperature changes is not to be forgotten. Some commercial products are available, but the list is not exhaustive: Presstap, Malpass, Vitop, Flextap, Viniplus, to name a few. The reader is recommended to peruse references 19 and 20 for complementary information. Also of importance is some application of nitrogen gas (N_2) or the liquid- form droplet to flush the headspace of residual air moments prior to final positioning of the valve or spout on the bag-in-box neck.

There are many designs for spouts and closures, depending on function. In packages destined for consumer use, the closure typically is a simple, one-piece, flexible valve that opens and closes as a lever is activated. Such a combination is shown in Figure 4. Two layers (A, B) of film are sealed to the spout sealing flange (C). Around the tubular wall (D) are one or more spout handling rings (E). The closure also has a handling ring (F) that facilitates its removal by the filler capping head. The closure is retained on the spout by a mating groove and head (G), and the liquid seal is achieved by a pluglike fit (H) between the two components. The one-piece closure is molded from a resilient material and becomes a dispensing valve by flexing the toggle (I), creating an opening to an orifice (J) and providing a path for the contents to exit.

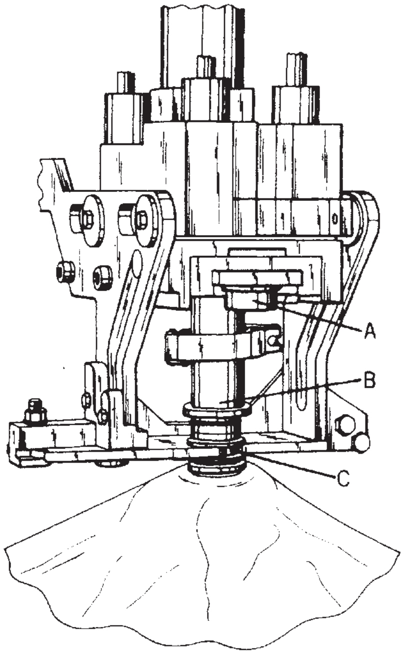

Figure 3. Filling head in fill position. The closure (A) has been removed to permit the filling nozzle (B) to come down and enter the spout (C).

For food-service use, such as in restaurants, the closure may have a dispensing tube attached or be compatible with a quick-connect-disconnect coupler leading to a pump. For other uses, just a cap may need to be removed prior to emptying of contents.

Box

In some dairy applications, the bags are transported in returnable plastic crates. Most typically a wide variety of materials in many forms may be used for the nonreturnable box of bag-in-box packages. For smaller sizes (1–6 gal, or 4–23 L), the outer box is usually made of corrugated board in a conventional cubic configuration. For larger sizes (30–54 gal, or 114–208 L), rigid plastic and metal containers, or even cylindrical drums, may be employed. The required strength must be designed into the box as dictated by the specific application.

Outer boxes may be manufactured with built-in handholds or locked-in-place handles, and some have special wax or plastic coatings for moisture protection. Most boxes are built with punch-out openings for easy access to the spout and closure.

FILLING

Filling bag-in-box packages may be a manual or semi- to fully automatic operation and is adaptable to a wide range

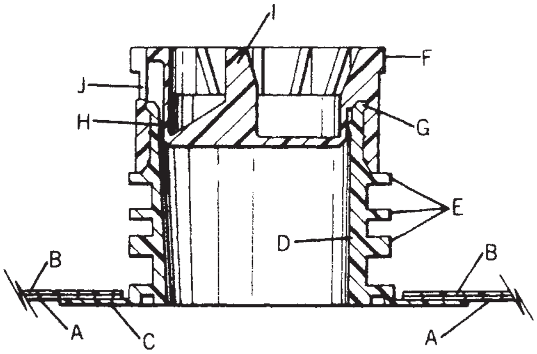

Figure 4. A flexible-valve closure. See text.

of standard industrial processing procedures, including cold, ambient, high-temperature, and aseptic filling. The basic design of a typical filling machine incorporates a flow meter, filling head or heads, an uncap–draw vacuum–fill–recap sequence, and filled bag discharge (see Filling machinery, still liquid). Bags may be manually loaded into the film head or automatically fed in strip form into more sophisticated models. Advanced filling equipment can also be provided with such devices as a cooling tunnel where hot-filled bags are agitated and cooled by jets of chilled water; a specialized valve to allow passage of liquids with large particulates; steam sterilizing and sterile air chambers for aseptic filling; or other modifications as determined by application.

Five-gallon (or 19-L) bags can be filled at speeds that range from four units per minute (1200 gal/h or 76 L/min) to 20 units per minute (6000 gal/h or 380 L/min). Low-speed filling is done on single-head, worker-attended fillers, whereas high-speed is done on filling on multihead equipment, comparing favorably with line speeds of conventional rigid-container operations. Complete systems including box formers, conveyors, automatic bag loading, and top sealers are available to support the automated large-capacity fillers.

SHIPPING AND STORAGE

Bag-in-box packaging offers significant weight- and space-saving economies. Before filling, components are shipped flat; after filling, the basic cubic shape of most bag-in-box outer boxes occupies less space and tare weight than cylindrical metal containers of comparable volume. Limitations include (a) restrictions on palletizing and stacking height, where content weight may exceed outer box ratings, especially those constructed of corrugated board, (b) vulnerability of uncoated boxes to humidity and moisture, (c) possibility of flex cracking of the bag structure is plausible, mainly if we have metallized polyester from the effect of internal handling, (d) short as well as long transportation, and (e) age in distribution (national and international levels). Damages by surrounding materials, leaking units, and vibrations as well as shocks (frequency and intensity) must not be forgotten nor neglected.

DISPENSING

Dispensing may be accomplished in one of three basic ways: uncapping and discharging contents; attaching one or more packages to a pumping system; or activating a small volume, user-demand closure often referred to as a dispensing valve.

In single-bag packages, the spout closure is contained within the outer box for protection and withdrawn prior to use through a perforated keyhold opening in the box. During dispensing, the bag collapses from atmospheric pressure as contents are expelled without the need for air to be admitted. When completely empty, bag-in-box package components, except those outer boxes or containers specifically designed for reuse, are fully disposable. Corrugated board and polyethylene are easily incinerated, and metallized and foil inner bags compact readily to go to landfills.

APPLICATIONS

With advancements constantly being made in bag film capabilities, along with filling and dispensing techniques, practically every commercial product is either being considered for or is now available in bag-in-box packages. Major users include the dairy industry with fluid milk, cream, and soft ice cream mixes. Also of interest are fruit juices and concentrates, edible oil, sauce, and jams, from 5- to 1000-L (1.3- to 260-gal) capacity. Clients are increasing for restaurants, institutions, and fast food markets (21, 22). The wine industry since the 1970s in Australia and South Africa have expended their success of the bag-in-box material and packing technologies worldwide (23); and, finally, most important transportation abuse and shelf-life extension are under close scrutiny (19, 24). From 3–4 L (3.2 qt to 1 gal), soon some 2-L (2.1 qt) containers will be available for retail; also, institutional size (10–20 L, or 2.6l–5.2 gal) and long preservation storage size (1200 L, or 312 gal), respectively, will be available. Purees and ketchup have modest applications too. Some soft drinks are also prepared from fountain syrup pumped from a bag-in-box arrangement (18), which eliminates the need for recycling and accounting for metal transfer containers.

BIBLIOGRAPHY

1. U.S. Patent 2,831,610 (April 28, 1958), H. E. Dennis (to Chase Bag Company).
2. U.S. Patent 3,090,526 (May 21, 1963), R. S. Hamilton and coworkers (to The Corrugated Container Company).
3. U.S. Patent 4,120,134 (October 17, 1978), W. R. Scholle (to Scholle Corporation).
4. “Films, Properties Chart,” in *Packaging Encyclopedia 1984*, Vol. 29, No. 4, Cahners Publication, pp. 90–93.
5. J. P. Butler, “Laminations and Coextrusions,” in *Packaging Encyclopedia 1984*, Vol. 29, No. 4, Cahners Publication, pp. 96–101.
6. U.S. Patent 4,283,901 (August 18, 1981), W. J. Schieser (to Liqui-Box Corporation).
7. U.S. Patent 6,223,981 (May 1, 1997) T. L. Gunder (to The Coca-Cola Company, GA (US)).
8. W.O. Patent 9,747,532 (December 18, 1997) A. A. Schroeder (to The Coca-Cola Company, GA (US)).
9. U.S. Patent 6,601,732 (August 5, 1998) M. L. Rooney and M. A. Horsham (to Commonwealth Scientific and Industrial Research Organisation (CSIRO), Campbell (AU)).
10. U.S. Patent 6,609,636 (August 26, 2000) P. F. Petriekis and W. H. Williams (to Packaging Systems LLC, Romeoville, IL (US)).
11. W.O. Patent 2,005,019,063 (March 3, 2004) A. Kjellberg, R. Olsson, M. Otterstedt, and A. Rydfjall (to all designed states except the US: STORA ENSO AB, Falun (SE). (to the authors and inventors directly, if in the US.

12. U.S. Patent 7,244,064 (October 6, 2004) J. J. Sullivan (to CDF Corporation).
13. W.O. Patent 2,005,007,511 (January 27, 2004) T. J. Williams and W. A. Cataldo (to Tropicana Products, Inc. FL. (US)).
14. U.S. Patent 2,006,023,973 (February 2, 2005) J. Plunkett and R. H. Fougere (to the authors, and inventors, MA (US)).
15. CA Patent 2,521,341 (May 13, 2006) R. J. Crosland, D. C. Dickerson, K. M. Chiera, and O. B. Rochefort (to the authors and inventors, CA (US)).
16. U.S. Patent 7,007,825 (May 11, 2006) W. L. Hill, K. M. Chiera, and R. J. Crosland (to Smurfit-Stone Container Enterprises, Inc.).
17. U.S. Patent 6,827,237 (August 21, 2006) K. L. Yorn and F. L. Provenza (to the authors and inventors, TX (US)).
18. U.S. Patent 4,286,636 (September 1,1981) W. S. Credle (to The Coca-Cola Company, GA (US)).
19. G. Doyon, A. Clement, S. Ribereau, and G. Morin, "Canadian Bag-in-Box under Distribution Channel Abuse: Material Fatigue, Flexing Simulation and Total Closure/Spout Leakage Investigation, *Packag. Technol. Sci.* **18**(2), 97–106 (2005).
20. G. J. Doyon, C. Poulet, L. Chalifoux, and B. Pascat, Measurement of valve oxygen diffusion for bag-in-box applications under three possible ambient conditions. *Packag. Technol. Sci.* **8**(4), 171–193 (1995).
21. E. Bueren, Bag-in-box packaging: economic alternative for the fruit juice industry. *Fruit Process*. **11**(11), 444–445 (2001).
22. Anonymous 1991. Coextruded bag-in-box packaging maintains superior oxygen barriers throughout packaging cycle. *Food Prod. Manage.* **114**(1), 16 (1991).
23. M. Blundell, Tapping. The potential of bag-in-box. *Food Review* **20**(3); 47,48,51,53 (1993).
24. H. A. Sundell, B. Holen, F. Nicolaysen, C. Hilton, and O. Lokkeberg, Bag-in-box packaging for wine: analysis of transport stress in barrier films. *Packag. Technol. Sci.* **5**(6), 321–329 (1992).

Further Reading

J. Kerry and P. Butler *Smart Packaging Technologies fro Fast Moving Consumer Goods*, John Wiley, Chichester, England, 340 pages, 2008.

G. Crossman, *Development in Packaging Machinery for filling*, Pira International, Leatherhead, UK, 98 pages, 2007.

G. L. Robertson, *Food Packaging: Principles and Practice*, 2nd edition, CRC-Taylor-Francis, Boca Raton, FL, 550 pages, 2006.

J. H. Han, Innovation in food packaging. Elsevier Academic Press. Amsterdam, The Netherlands, 517 pages, 2005.

W. Soroka, *Fundamentals of Packaging Technology*, 3rd edition, Institute of Packaging Professionals, Naperville, Ill. USA, 600 pages, 2002.

L. Geoffrey, *Packaging, Policy and the Environment*, Aspen Publishers, Gaithersburg. MD, 412 pages, 2000.

F. Lox, *Packaging and Ecology*, Pira International, Randalls Road, Leatherhead, Surrey, UK, 327 pages, 1992.

R. C. Griffin, S. Saccharow, and A. L. Brody, Principles of Package Development, 2nd edition, AVI Publishing Co., and Westport, CT, 378 pages, 1985.

R. K. Brandenburg and J. J-L. Lee, *Fundamentals of Packaging Dynamics*, 2nd edition, MTS Systems Corporation, Minneapolis, MN, 162 pages, 1985.

J. F. Hanlon, *Handbook of Package Engineering*, 2nd edition, McGraw-Hill, New York, 560 pages, 1984.

Glossary of Packaging Terms

Writing Packaging Machinery Specifications, Institute of Packaging Equipment and Performance Task Force, Institute of Packaging Professionals, Herndon, Virginia, 54 pages, 1996.

Standards Definitions of Trade Terms Commonly Used in Packaging, 6th edition, The Packaging Institute, Stanford, Connecticut, 287 pages, 1988.

BAGMAKING MACHINERY

Heavy-duty bags, i.e., shipping sacks, of multiwall paper or single-wall mono- or coextruded plastic are used to package such dry and free-flowing products as cement, plastic resin, chemicals, fertilizer, garden and lawn-care products, and pet foods. These bags typically range in capacity from 25 to 100 lb (11.3–45.4 kg), although large plastic bulk shipping bags may hold as much as a metric ton (see Bags, paper; Bags, heavy-duty plastic; Intermediate bulk containers).

Although there are dozens of variations in heavy-duty bag constructions, there are only two basic styles: the open-mouth bag and the valve bag. The former is open at one end and requires a field-closing operation after filling. Valve bags are made with both ends closed, and filling is accomplished through an opening called a valve. After filling, the valve is held shut by the pressure of the bag's contents.

MULTIWALL-BAG MACHINERY

Traditionally, multiwall bags are manufactured in two operations on separate equipment lines. Formation of tubes takes place on the *tuber*. Closing of one or both ends of the tubes to make the bags is done on the *bottomer*. Multiwall bags have two to six plies to paper. Typical constructions are three and four plies. Polyethylene (PE) film is often used as an inbetween or innermost ply to provide a moisture barrier.

Tube Forming. The tuber (Figure 1) starts with multiple giant rolls of kraft paper of a width that will finish into the specific bag width. At the cross-pasting station, spots of adhesive are applied between the plies to hold them together. The material is then formed into a tube that is pasted together along the seam. The tube may be formed with or without gussets. During seam-pasting, the edges of the various plies form a shingle pattern. When they are brought together to form a seam, these edges interweave so that each ply glues to itself. This provides optimal seam strength.

Flush-cut tubes are cut to the appropriate sections by a rotating upper and lower knife assembly. With stepped-end tubes, perforating knives are used to cut stepping patterns on both ends of the tube. The tube sections are

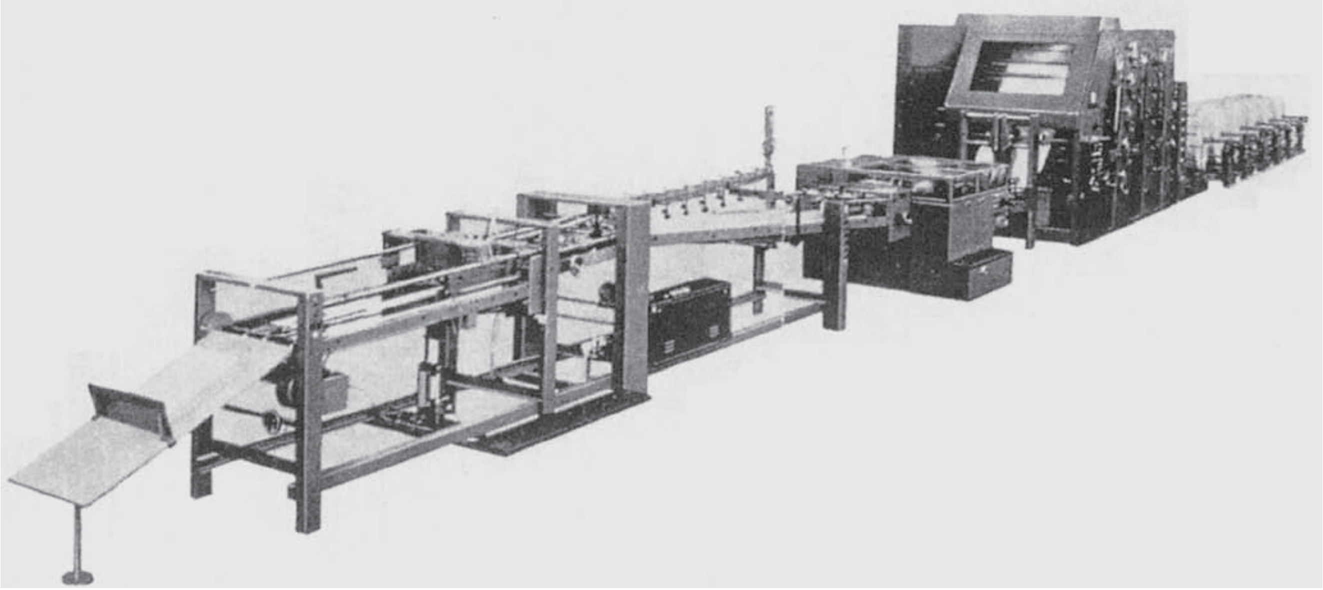

Figure 1. A universal tubing machine. Figure insert shows components: 1, flexoprinter; 2, unwind stations with reel-change arrangements; 3, automatic web brake; 4, web-guider path rollers; 5, web guider; 6, vertical auxiliary draw; 7, perforation; 8, cross pasting; 9, longitudinal register rollers; 10, seam pasting and auxiliary draw; 11, tube forming; 12, cut/register regulator; 13, cutting and tearoff unit; 14, variable-length drive-unit; 15, packet delivery unit; 16, takeoff table.

then snapped apart along perforations that were made prior to crosspasting. This snapping action is accomplished by sending the tubes through two sets of rollers, with the second set moving slightly faster than the first. Once the tubes have been flushcut or separated, they proceed to the delivery section of the line.

About one third of the multiwall-bag market is accounted for by bags with an inner, or intermediate, ply of plastic film. Flat film, used as an inner or intermediate layer, is formed into a tube along with the paper plies and pasted or, if necessary, hot-melt laminated in place. Another possibility is the insertion on the tuber of open-mouth film liners, the open end of which can project beyond the mouth of the paper sack. Stepped-end and flush-cut tubes are usually made on differently equipped tubers, but a universal model also can be adapted to produce either type.

Flush-cut vs. Stepped End. Flush cutting is the most inexpensive tubing method in terms of both original equipment investment and tubing productivity, but these gains are lost in the subsequent bagmaking operations. The bottom of a flush-cut tube is normally sewn, and sewing is also the traditional method of field closure for many products such as seed and animal feeds. There was some use of flush-cut tubes as valve bags, particularly in Europe, but they are not widely used today because a pasted flush-cut bottom is structurally weak. The gluing of the bottom takes place only on one ply. To compensate for this weakness, a patch would normally be added to the bottom of the bag. Sewing is a widely used bottoming method in the United States because there is a great deal of flush-cut tubing and sewing equipment in place, and replacing it in many instances would result in only a marginal return on investment. Unfortunately, sewing has many drawbacks. It is labor-intensive, and because the equipment has a large number of delicate moving parts, maintenance and repair costs are high. Also, the needle holes created by sewing weaken the bag, allow sifting, and make the bag more accessible to rodents and other pests.

The stepped-end tube makes the strongest bag. The ends of the bag have shingle-like stepping patterns that intermesh at the gluing points. In the bottoming process, ply one is glued to ply one, ply two to ply two, and so on. Generally speaking, all bag manufacturers have their own stepping-pattern designs.

Bottoming Equipment. The finished tube sections are converted into bags by closing one or both of the tube ends in any of the following three ways:

1. One end of the tube is shut, forming a sewn open-mouth (SOM) bag. After filling, the top of the bag is closed by means of a portable field sewing unit.
2. A satchel bottom is formed on each end of the tube, with one of the bottoms provided with an opening or valve through which the bag is filled by insertion of the spout of an automatic filling machine or packer. The valve is closed by the pressure of the bags contents. Additional means are available to make the bag more siftproof. In a valve bottomer (Figure 2), tubes advance from a feeder to a tube aligner and a diverting unit for removing incorrectly fed tubes. The tubes pass through a series of creasing stations, and needle holes may be added under

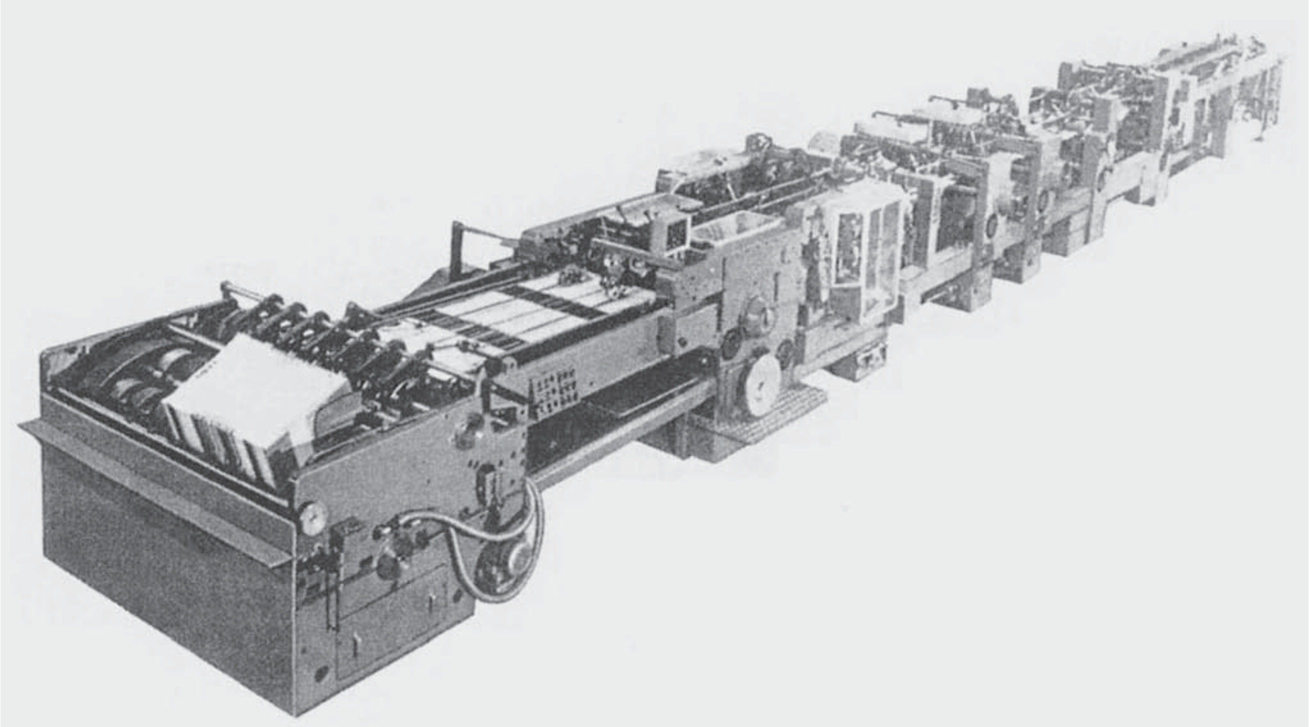

Figure 2. A valve bottomer. Figure insert indicates components: 1, rotary or double feeder; 2, tube aligner; 3, diverter for removing incorrectly fed tubes; 4, diagonal creasing and needle vent hole arrangements; 5, bottom center creasing stations with slitting arrangement for bottom flaps; 6, bottom opening station; 7, bottom creasing station; 8, unwind for valve patch; 9, bottom turning station; 10, valve unit; 11, bottom pasting; 12, bottom closing station; 13, bottom capping unit or intermediate pressing station; 14, flexo printers for bottom caps; 15, unwinds for bottom caps; 16, delivery, optionally with incorporated counting and packeting station.

the valve for proper venting of the bag during filling. At the opening section, the tube is opened and triangular pockets are formed. Valves are inserted at a valving station. Valves are automatically formed by a special machine unit and then inserted into the bottom. They may be inserted and folded simultaneously along with the bottom or performed and automatically inserted. Preformed valves permit the use of a smaller valve size in proportion to the bottom of the bag. In Europe, reinforcing patches are customarily applied to both ends of the bag for added strength. The bags are discharged to a press section where they are conveyed in a continuous shingled stream. Powerful contact pressure of belts (top and bottom) ensures efficient adhesion. In most instances, the final station is an automatic counting and packeting unit.

(3) Stepped-end tubes with gussets and a special step pattern can be converted into pinch-bottom bags on which beads of hot-melt or cold adhesives (see Adhesives) are applied to the steps in the bottom (see Figure 3(a)). These, in turn, are folded over and pressed closed to make an absolutely siftproof bottom (Figure 3(b)). Beads of hot melt applied to the steps at the top of the bag are allowed to cool and solidify. After the bag is filled, a field-closure unit reactivates the hot-melt adhesive, folds over the top of the bag, and presses it closed.

In most instances, bags are collected in packets or bundles palletized for shipment to the end user. However, it is also possible to collect the bags on reels for efficient loading of automatic bag-feeding equipment in the field. The reeled bags form a shingled pattern held in place by the pressure of two plastic bands that are wound continuously around the reel along with the bags.

Other Development. With conventional equipment, it usually takes two bottomers to keep pace with one tuber. This fact has generally discouraged the development of in-line multiwall bagmaking systems in the United States. For example, tubers for cement bags typically operate at speeds from 270 to 320 tubes/min, whereas old-style bottomers run at 120–150 bags/min. Newer bottoming equipment can achieve speeds up to 250 bags/min, enabling one-to-one operation of tuber and bottomer on an in-line system. The tuber operates at less than maximum output, but the in-line system still produces more finished bags because of the increased efficiency resulting from the bottomer being continually fed with fresh tubes. Tubes where the paste has dried become stiff and difficult to handle. As paper is unwound from a roll, it quickly loses its moisture content and becomes less workable. These types of problems are alleviated with in-line bottoming.

In-line tube forming and tube bottoming also lend themselves to significant improvements in manpower utilization. The U-shaped in-line pinch-bottoming system

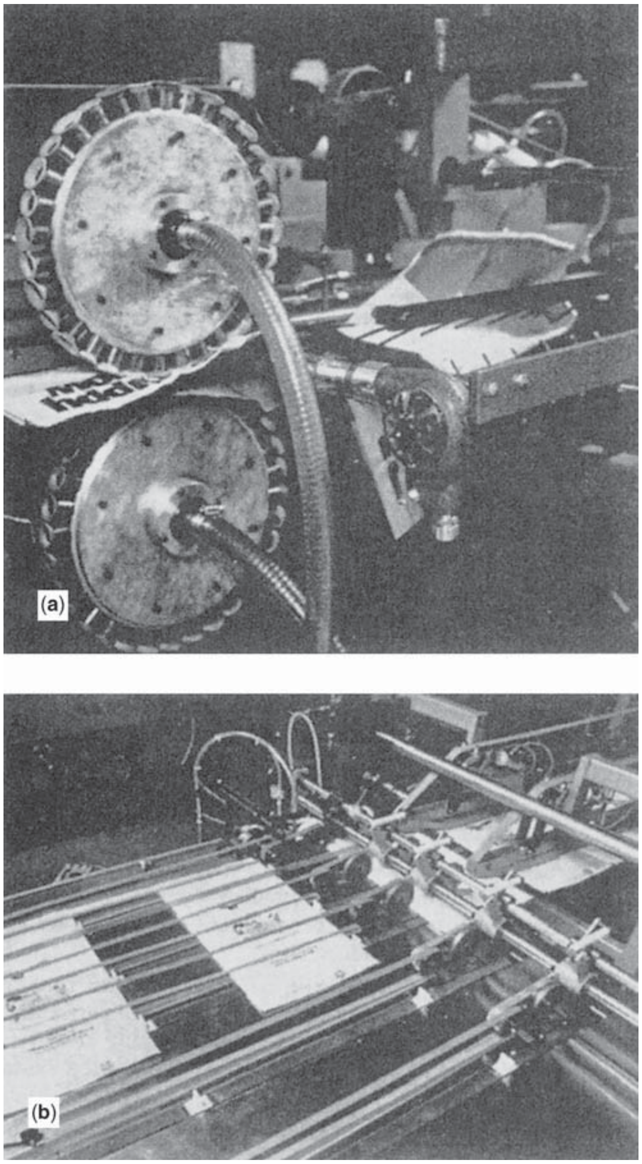

Figure 3. (**a**) adhesives being applied; (**b**) pressing station (bags are folded over and pressed closed).

shown in Figure 4 is capable of reducing the personnel requirements from nine to four. The key to the system is a unique turning station that rotates the axis of the tube by 90° for proper alignment with the bottomer. The "factory end" of the bottomer may be heat-sealed in-line (see Sealing, heat). On the "customer" end of the bag, hot melt or cold glue can be applied, or this end of the bag can be flush-cut for sewing in the field. A sewn top with a pinch bottom offers strength and siftproofness in this bottom style while allowing the customer to retain existing closing equipment. For a consumer product such as pet food, the pinch bottom allows the bag to be stacked horizontally on the shelf, still presenting a large graphics display area for the shopper.

An out-of-line double feeder-equipped pinch bottomer produces pinch-bottom bags for the manufacturers not anticipating having the volume to fully utilize the more productive in-line system. The trend for bag users to reduce inventories and place more small orders is expected to continue indefinitely. For the converter, this has meant decreased productivity because of a disproportionate amount of time being spent in changeovers. New computer numerical control (CNC) bottoming equipment promises to reduce changeover time from an average of about 3 h to about 30 min. All gross adjustments of machinery for a particular setup are stored in the microprocessor and made on the machine by way of stepping motors. Although minor fine-tuning is still required, the starting adjustment point of each operator is the same, and settings are optimized according to a logical sequence designed into the control (see Instrumentation). In addition to faster setups, standardization of tuning procedures should result in more consistent and improved product quality.

PLASTIC BAG MACHINERY

The procedure for making all-plastic, heavy-duty bags is similar to the procedure for multiwall bags; i.e., various bottoming techniques are used to transform a tube into a finished bag, generally either an open-mouth or valve bag, with or without gussets. The three basic differences are described below:

(1) Plastic bagmaking almost always uses a single ply of material, either mono-extruded film, coextruded film, or woven fiber instead of the multiple plies used in paper shipping sacks.
(2) All bagmaking operations are performed on a single converting line. If the bag is made from a flat sheet, the tubing and bottoming operations are integrated into a single bagmaking line. Bags are often made from tubes of blown film or circular woven fibers, and no tubing step is necessary.
(3) The plastic-bagmaking line may incorporate in-line printing, although the outer ply of kraft paper used in a multiwall bag is typically preprinted off-line.

Woven-bag Machinery. Economy of raw materials and toughness are two features that make the woven plastic bag an attractive packaging medium for goods mainly intended for export.

A typical line for converting woven high-density polyethylene (HDPE) or polypropylene (PP) material into heavy-duty shipping sacks includes the following: unwind units for sheet or tubular webs, jumbo or normal size; a flexographic printing machine (see Printing) designed for in-line operation; a wax-application unit (see Waxes) to apply a hot-melt strip across uncoated material at the region of subsequent cutting to prevent fraying; and a flat and gusseted tube-forming unit. The flat sheet of coated or uncoated material is longitudinally folded into tubular form. Some machines have the ability to do this without traditional tube-forming parts. A longitudinal seam is sealed by an extruded bead of plastic. Output of the extruder is matched to the web speed by a tachogenerator.

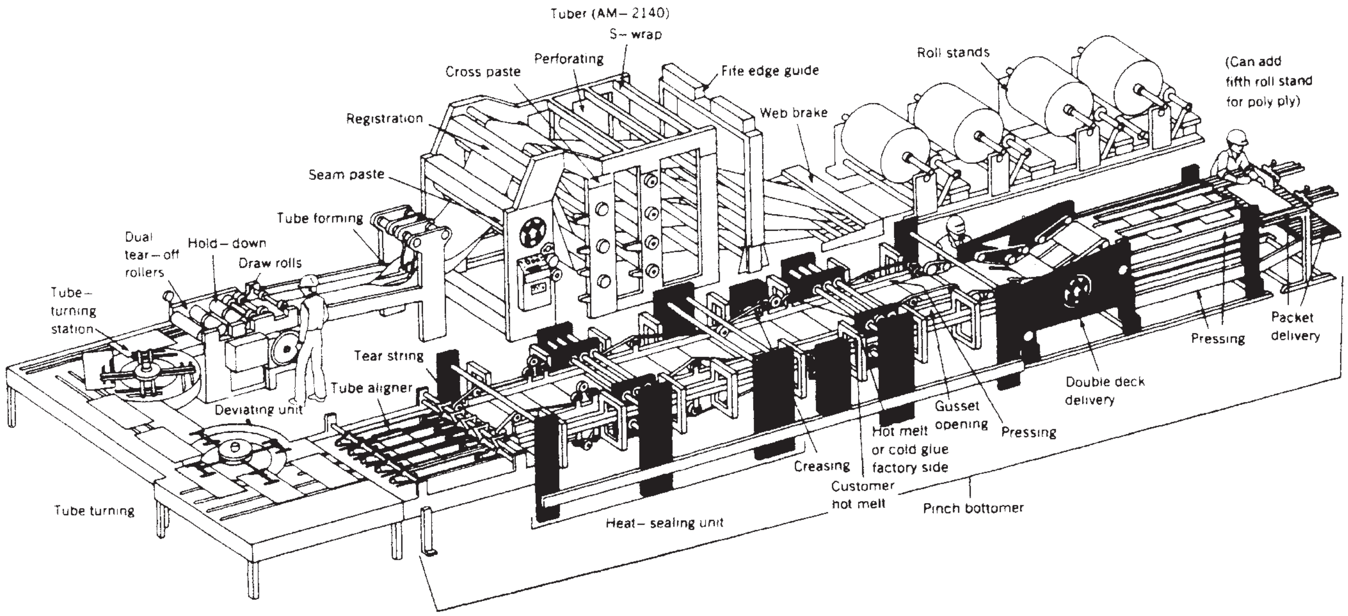

Figure 4. In-line tube forming and pinch bottoming.

A PE liner unit can be arranged above the tube-forming section to apply a PE liner to the flat web automatically. The principal element of this unit is a welding drum with rotating welding segments that provide the reel-fed PE with a bottom weld at the correct intervals. A Z-folding device enables a fold to be made in the crosswise direction for the provision of a liner that is longer than the sack. In addition, a crosscutting unit cuts the outer web and the PE insert, usually by means of heated rotating knives. In the bottoming unit, cut lengths are transferred to the bottoming equipment by conveyor. Bottoming is accomplished either by sewing or the application of a tape strip. Instead of folding the tape over the open end of the sack, the sack end can be folded once or twice and the tape can be applied in flat form over the folds. The delivery unit collects finished sacks into piles for manual or automatic unloading.

Plastic Valve Sack Machinery. Plastic valve bags operate by the same principle as multiwall valve bags. On filling, the pressure of the product closes a valve that has been inserted in either the bottom or the side of the bag. If the material is granular (not pelletized), channels along the bottom of the valve sack would allow some of the product to sift out. These channels can be made siftproof by closing them off with two beads of hot wax during the bottoming operation. Only 5–10% of the plastic valve sacks made in the United States require this feature. Therefore, most plastic valve sacks are produced on high-speed lines that produce sacks at about twice the speed of the siftproof machinery.

A typical system for the production of pasted PE bags from either flat film or blow tubes (Figure 5) consists of the following equipment:

1. An unwind unit for flat film or tubing incorporating automatic tension and edge-guide controls.
2. A tube former in which folding plates form flat film into a tube. A longitudinal seam is bonded by an extruded PE bead.
3. A rotary cross cutter in which the formed tube is separated into individual lengths by the perforated knife of the rotary cross cutter. Fraying of woven materials can be eliminated with a heated knife that bonds the tapes together.
4. A turning unit in which, after the cross cutter, the tubes are turned 90° to bring the cut ends into position for the following processes.
5. A tube aligner and ejector gate in which exact alignment of tubes in longitudinal and cross direction is achieved by means of stops affixed to circulating chains and obliquely arranged accelerating conveyor bands. Photocells monitor the position of the tube lengths. In the event of misalignment, leading to malformed bottoms and, therefore, unusable sacks, the photocell triggers an electropneumatic gate, which, in turn, ejects the tube length from the line.
6. Pasting stations in which each tube end is simultaneously pasted by a pair of paste units using a special adhesive.
7. An enclosed drying system evaporates and draws off solvent from the adhesive.

8–10. Creasing, bottom-opening, and fixing of opened bottom in which a rotating pair of bars hold the tube length ends by suction and the rotary movement pulls the tube ends open sufficiently to enable rotating spreaders to enter and complete the bottom-opening process. The diagonal folds of the pockets are fixed by press rolls to avoid subsequent opening of the pockets.

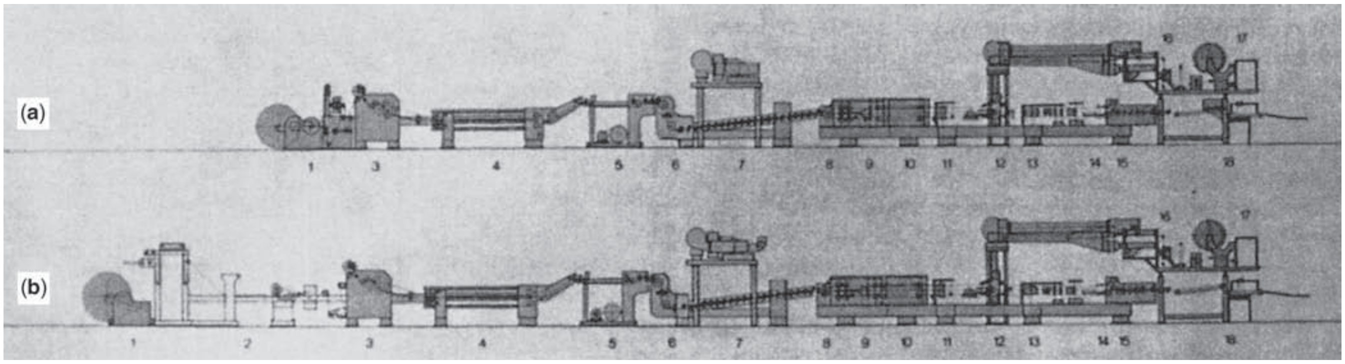

Figure 5. Systems for making all-plastic heavy-duty bags from (**a**) tubular film or (**b**) tubular or flat film. Components are described by number in the text.

11. A valve-patch unit forms the valve from rolls of flat film and places it in the leading or trailing pocket, as required.
12. The bottom-closing station, where, after the valve is positioned, the pasted bottom flaps are folded over, one to the other, and the sack bottom is firmly closed.

13–17. The bottom-patch unit, bottom-turning station, flexo-printing units for bottom patches, pasting stations with drying, and unwind for bottom-patch film, in which patches are formed from two separate rolls of film, flexo-printed (if required), and pasted to both sack bottoms. The bottom geometry is checked by photocells and faulty sacks are ejected through a gate. Just before they reach the delivery section, the bottoms are turned from a vertical to a horizontal processing plane.

18. Delivery with counter and packeting station, in which good adhesion of the cover patch to the sack bottom is assured by applying pressure to the shingled sacks with staggered spring-loaded disks. Having reached a predetermined count, the conveyor accelerates the shingled sacks to the packing station, where the counted sacks are collected into packets and discharged. To accommodate a user's automated filling line, equipment is also available to wind the plastic valve sacks onto reels.

Continuous Bagforming and Bagfilling. Plastic valve bags have been used extensively, especially in Europe, for products such as plastic resin. However, continuous systems for forming, filling, and closing flat and gusseted plastic bags are becoming increasingly popular in the resin market. Such systems typically use prefabricated tubing for high strength. The tubular material is usually preprinted with random printing. Since resin weight varies from day to day, depending on ambient conditions and other factors, random printing allows the bag length to be adjusted according to the prevailing resin volume—weight relationship. In this manner, a tight and graphically appealing package is formed.

An integrated system for forming, filling, and closing of shipping bags would contain the following stations: unwind unit; compensator roller; hot-emboss marking unit; sealing station for bottom seam; bag shingling; separation of bags; introduction of bag-holding tongs; bag filling; supply of the filling product; sealing station for closing seam; bag outfeed conveyor; and control panel. Such a system can produce up to 1350 filled sacks per hour.

One-way Flexible Containers. One-way bulk shipping containers are becoming very popular in Europe. These oversized bags are designed for handling by forklift trucks equipped with one of several specially designed transport devices. Called intermediate bulk containers, they range in capacity from 1100 lb to about a metric ton (0.5–1 t), and are constructed of woven PP or HDPE. Tubes are generally woven on a circular loom because elimination of the longitudinal seam gives the bag exceptional strength. The advantage of this bag is that it represents an exceptionally economical and efficient method of handling bulk quantities. Acceptance of the concept has been relatively slow in the United States because it requires bag producers, product manufacturers, and product customers all to invest in special equipment for bagmaking, product filling, or handling.

ELECTRONIC CONTROLS

Today's bagmaking equipment is following the overall industrial trend toward the use of programmable microprocessor control systems of increasing complexity. Ancillary equipment such as printing presses and extruders already have a high level of control, and other units on the bagmaking line are quickly being adapted to the computer. The first objective in conversion to programmable control is replacement of cumbersome mechanical logic. The next is storage of setup and processing parameters for subsequent reuse. Microprocessors are being used for controlling temperatures, web tension, surface-tension treatment, adhesive application, ink, and registration. The most recent stage of automation has been provision of multiple outputs so that lines may be monitored or controlled by hierarchal computers.

BIBLIOGRAPHY

"Bagmaking Machinery," in Richard H. John, ed., *The Wiley Encyclopedia of Packaging Technology*, 1st ed., Wiley, New York, Wind-moeller & Hoelscher Corporation, 1986, pp. 29–34.

BAGS, BULK, FLEXIBLE INTERMEDIATE BULK CONTAINERS

Diana Twede
Michigan State University
School of Packaging, East
Lansing, Michigan

Bob Drasner
Senior Consultant, Packaging
Equipment Specialists
(Retired), Rockport, Texas

Intermediate bulk containers (IBCs) are *intermediate* between smaller packages, such as shipping sacks and drums, and the larger bulk truck and railcar quantities. IBCs fall into two general categories: Flexible and Rigid. Filled IBCs occupy about the same space as a typical palletized unit load.

Flexible intermediate bulk containers (FIBCs) are very big bags, made from fabric sewn into shape. They are often called *bulk bags* or *SuperSacks* (a registered trademark). Usually they contain about 1 ton of dry bulk product such as grains, powders, and pellets. There are also rigid IBCs, which may be called *Gaylords* (a registered trademark) when made of corrugated board or *Tote Bins* (another registered trademark) when they are made of stainless steel or plastic.

They are usually filled from the top, lifted from the top or bottom, and dispensed through the bottom (see Figure 1). Many are reused.

Flexible intermediate bulk containers (FIBCs), have been popular since woven polypropylene arrived on the scene in about 1963. Prior to that, bulk bags were made from PVC or rubber-coated cloth and were mainly used for shipping carbon black in 1- to 4-ton loads in each "bladder" to rubber manufacturers. They were filled to capacity and then weighed on a truck scale before loading onto a flatbed truck. They were usually lifted by overhead crane, and then discharged into hoppers through narrow inlets to reduce dust. They were reused over and over for many years, and they were shipped back to the carbon black manufacturer for repair, patching, and refilling. These huge "balls of black" needed no protection from the elements and weren't even covered with a tarp. They were just tied down securely, 6–8 to a flatbed truck.

Soon afterwards, FIBCs were adopted in other industries in Japan and Europe as an economical way to ship intermediate quantities in logistical systems where shippers and their industrial customers cannot handle a whole bulk tank truck or bulk railcar of product and prefer not to manually handle multiple shipping sacks or drums. Bulk bags have become increasingly popular for replacing 50- to 100-lb (25- to 50-kg) paper and plastic bags. Growth is expected to continue, especially given (a) the present trends of legislation to reduce the maximum weight that a person may lift and (b) the lower cost (and natural resource conservation) compared to smaller sacks or drums.

The advantages of bulk bags, compared to buying smaller packages, include reduced costs for package purchase (from about $8 per bulk bag), filling, and handling. They offer a customer service in handling savings because of the ease of dispensing the product. Bulk bags can also promote safety when handling hazardous materials, because they can be incorporated into sealed material handling systems where smaller bags that have to be cut open and shaken to be emptied cannot.

Another advantage of FIBCs is that they can be customized for the exact amount needed by their customers for a batch. Unlike other types of shipping containers, they can be made in any size and in heights from 24 in. up to the limiting height of a truck/container door.

TYPICAL USES

Bulk bags are used for a wide variety of dry products, primarily for ingredients intended for further processing. Typical products include chemicals, minerals, dyes, resins, feed, seed, grain, flour, sugar, salt, nuts, detergents, sand,

Figure 1. The most popular style of bulk bag: dispensed from the bottom. (Photo courtesy of Control and Metering Ltd.)

clay, cement, hazardous materials, building materials, pharmaceuticals, fertilizers, and other commodities in powder, pellet, flake, crystal, or granular form. Liquid products need more support than a flexible bag alone can provide, so intermediate quantities (200 gal) of liquids can be packaged in a “composite” IBC, with the bag supported by a metal frame, or in rigid IBCs, such as pallet boxes or small tanks that may be lined with a bag. However, some “flexible tanks” for over 5000 gal of liquid, without rigid supports but with transport restraint attachments, have been introduced in Europe.

The filled bag weight depends on the size of the bag and the density of the product. The heavier the product, the more strength is needed. The standard FIBC holds 1100–2200 lb, and bags from heavier fabric can contain up to 5 metric tons. FIBC manufacturers offer bags with a volume of 10–100 ft^3. Footprint sizes range from 29 in. × 29 in. to 41 in. × 41 in., with heights of $\leq$88-in. empty size. When bags are filled, they have a tendency to settle into a more circular shape. Examples of bulk bag use can be found in many industries. Sugar and flour are shipped to food processing plants in FIBCs. Sandblasters can receive sand in 5500-lb FIBCs. Plastic resin is shipped to converters in 1-ton FIBCs. About 80% of fertilizer in the United Kingdom currently goes into FIBCs. One of the largest markets in the United States is for exported commodities.

MATERIALS

Bulk bags are made of plastic fabric or films with a very high tensile strength. Most are made from densely woven polypropylene (PP) fabric and have sewn seams, but they can also be made from circular-woven fabric (see Film, nonoriented PP; Film, oriented PP). Other materials include high-density polyethylene (HDPE) and polyester. Some European FIBCs are made from fiber-reinforced paper or polyvinyl chloride (PVC) (see Film, rigid PVC). The most heavy-duty FIBCs are usually made from PVC-coated PE fabric. Bulk bags can be printed to identify the contents. Filled bulk bags are usually cube-shaped with a square footprint, but some have a circular footprint. Some designs have antibulging “baffles” as reinforcement features.

Selection of the appropriate materials and structure depends on the properties of the product and the distribution system. Waterproof FIBCs are coated with PVC or latex and have heat-sealed (rather than sewn) seams. If the bags will be stored outside, the fabric is formulated to resist ultraviolet degradation. Some products generate static electricity when they flow, and antistatic (or static conductive/dissipative) fabric or liners are available. If bulk bags are intended to be reused, they are usually stronger than those intended for a single trip.

Many bulk bags have plastic liners. Often the liner is disposable (for sanitation reasons) and the outer bag is reused. The choice of liner material depends on the barrier properties needed or the tendency of the products to dust or leak. Products that attract moisture, or are sensitive to water, require moisture vapor transmission resistance. Polyethylene (2–4 mils) is common, but it is not a complete moisture or gas barrier. Saran and aluminum foil laminate liners are better barriers and can be vacuum-packed. Liners are available in single or multiple plies. The liner construction matches the outer bag construction with respect to dimensions and placement of filling and dispensing ports. Liners come in tube shape or are custom-made to fit, with fill and discharge spouts. The liner can be designed to be manually or mechanically inserted.

There are various lifting and dispensing features available. For example, the most standard European FIBCs are for fertilizer, with single-point lifting and no discharge spout. The most common U.S. FIBCs have four lifting points and a spout. The choice of features depends on the application.

FILLING AND DISPENSING

Bulk bags are usually filled from the top and discharged from the bottom. Most bulk bags have a spout at the top and one on the bottom. The spouts are closed with a tie, clamp, tape, or stitching. Clamps or ties can also be used to tie off a partially discharged bag or to regulate the rate of discharge. Intermittent flow controls are also available. However, some bags have no spouts and are simply filled or emptied through an open “duffle” that is gathered and tied to close. Some single-use FIBCs have no discharge spout, and they are simply slit to empty.

Bulk bags normally require special filling and dispensing fixtures and equipment. Gravity directs the flow. Filling and discharge procedures and efficiency are influenced by the product’s angle of repose and flow characteristics. During filling, the bag needs to be suspended from the top so that the product will completely fill the corners. Some filling systems incorporate a vibrating or settling device, deaeration and dust control measures, or a bag squaring method (although they rarely stay square once they are handled). Most are filled to weight using either a batch weigh hopper above the bag or a load cell to monitor the bag’s weight as it is filled. Bulk bags are quick to fill; a two-operator filling station can fill a 2200-lb-capacity bag in about 30 s with a dense free-flowing product. But a light powdery product, which may require extra handling or vibration to compact, may take up to 30 min to pack.

A typical discharge fixture positions the bulk bag above the awaiting hopper, conveyor, pump, or tank receptacle where the bottom is opened so that the product can flow out. Special discharge equipment has been developed to reduce dust, improve flow, meter, and reclose, and improve sanitation (especially important for food products).

SAFE HANDLING, TRANSPORT, AND STORAGE

Bulk bag handling and transport require special systems to ensure safety and efficiency. FIBCs are very heavy and can be unstable during handling, storage, and transport. This instability can result in danger to materials-handling workers and can cause damage to the bag or its contents.

Bulk bags are lifted from the top or handled on pallets. The most common top-lifting design incorporates four loops at the cube-shaped bag's four top corners. These loops may extend from the top to cradle the bottom like a sling, sewn onto the fabric. There are also center-lift designs that incorporate (a) a single sleeve or loop on the top center and (b) two-sleeve designs with sleeves along two top edges. One-loop bags are more popular in the United Kingdom and France, especially for fertilizer. Some bags have a combination design with center-lift features to aid in discharge and corner lifting to aid in filling. The most heavy-duty FIBCs have steel lifting devices.

The loops or sleeves are lifted by the two forks of a forklift (or a single bar, in the case of the center-lift bags) that may be inverted to shorten the height of the lift. For most bags, it is necessary for one worker to position the loops onto the forks and a second worker to maneuver the forklift. Several can be lifted simultaneously by a ship's tackle and the appropriate stevedore fixtures. It is important for the loops or sleeves to be strong enough to support the weight during handling, including jerks caused by the lift equipment. Correct handling procedures are often printed on the bag or label.

Bulk bags can be transported by flatbed trucks, enclosed trailers, boxcars, flatcars, ship, or barge. Some restraint may be necessary to prevent shifting in transit. Typical restraints are made from straps and fabric, attached to the trailer and boxcar walls. Bulk bags must be strongly restrained if stacked in transit.

Stacks of bulk bags can be unstable. They can be stacked on pallets, but stacks more than 2-high should be supported by retaining walls. Even stacks of 2 should generally be pyramided (the top load spanning two lower ones) to lend stability. Handling a stack of two with a forklift is not recommended. One reason there are stability problems with stacking FIBCs is because they are often not filled with equipment that produces proper settling and material distribution to make the bag form a stable. FIBCs can also be used for temporary storage within a plant, and some can be used for outdoor storage.

DISPOSAL AND REUSE

Empty bulk bags can be discarded in landfills or incinerated if they have no hazardous residue, or they can be recycled (shredded and re-extruded) with compatible materials. But most bulk bags are returned and reused.

FIBCs have excellent return and reuse properties because they are strong when filled, and yet they are lightweight (usually < 10 lb) and can be folded small when empty. The life of a reusable FIBC depends on its construction, the nature of the contents, and the handling and transportation method used, but is typically 5–10 trips. Many shippers reuse the outer bag but discard the liner. Reusable FIBCs are usually stronger than one-way bags. Returnable packages add costs for return shipment, cleaning, tracking, and inspection. Most are reused in a closed-loop system. They require a close relationship with customers to ensure their timely return in order to minimize the packaging investment.

A hidden cost that is often discovered *after* a reuse system is put into place is that the filler of the FIBCs must inspect, clean, and repair the bags. This situation has spawned opportunites for third-party businesses to perform these functions.

In some cases, there is a market for used bulk bags, similar to the market for reconditioned drums. But an FIBC is usually designed for a specific type of product and use, and it is best reused for the same type of product. Buyers and sellers of used shipping containers should certify the identity and compatibility of previous contents and document that the package was cleaned, inspected, and certified as to its safe reuse capacity. For example, lime for steelmaking can be packed in used bags because the residue is burned up and vaporized (along with the whole bag, which is not emptied but is added to the furnace intact).

TESTING AND STANDARDS

Safety and performance standards have always been a concern of the FIBC industry, evidenced by the creation of the industry's self-policing associations such as the Flexible Intermediate Bulk Container Association (FIBCA) and the European Flexible Intermediate Bulk Container Association (EFIBCA). These associations work with other standards groups like the British Standards Organization (BSO), the International Standards Organization (ISO), the American Society for Testing and Materials (ASTM), the American National Standards Institute (ANSI), the United Nations (UN), and the European Technical Committee for Packaging Standardization (CEN/TC261/SC3/WG7 covers IBCs) to better control FIBC safety and quality. Performance standards for FIBCs vary by country and regulatory agency. The first performance standards were developed in the United Kingdom by the EFIBCA and were later incorporated into the British Standard Institute's BS 6382 (BSI/PKM 117). These form the basis for later standards adopted by other countries, including the United States, Australia, Japan, and throughout the European Economic Community (EEC). It is also the basis for the International Standards Organization's ISO TC 122/SC 2 N 238. The EFIBCA has also standardized the information that appears on each bag to include name, date, and address of manufacture, construction identification, standard to which the bag is produced, test certification, class of bag (e.g., single-trip), safe working load, safety factors, handling pictograms, and the contents' identification.

FIBCs used for hazardous materials are the most highly regulated. In 1990/91, the UN Chapter 16 for the carriage of dangerous goods accepted bulk bags for UN Class 4.1 flammable solids, Class 5.1 oxidizing substances, Class 6.1 toxic substances, and Class 8 corrosives, provided that they conform to the particular modal requirement and have passed drop, topple, righting, top-lift, stacking, and tear tests. In the United States, FIBCs have been accepted by the U.S. Department of Transportation (DOT) for Groups II and III hazardous materials, and performance specifications are given in HM 181-E (1). (See also Transportation codes.)

FIBC materials vary, so most standards are based on performance. Weight-bearing performance tests usually specify testing the bag's safe rated capacity with a much heavier weight—6 times more heavy for standard FIBCs, 8 times for more heavy-duty FIBCs, and 5 times for single-use FIBCs—than the expected contents. Filled bag performance should also be judged with respect to tear resistance, stacking, toppling, dropping (2–4 ft), dragging, righting (by one or two loops), and vibration. The most prevalent forms of damage are split side seams, broken loops, torn fabric, abrasion, and sifting. Damage can also be dangerous, if hazardous materials are spilled or if a stack topples onto a worker. In addition to performance tests, there are relevant material tests for the bag fabric and liner, including tensile strength and moisture vapor transmission. Material tests are used primarily for quality control.

CONCLUSION

Flexible intermediate bulk containers (FIBCs) provide a safe and cost-effective system for handling and transporting a wide range of bulk materials. They are "intermediate" between bulk handling and using shipping sacks for dry flowable commodities. FIBCs offer advantages compared to bulk handling and require a low initial investment compared to the special transport and handling equipment used for bulk handling. Some can be stored outdoors without the need for a warehouse or silo. They reduce product waste, and the contents can be easily and accurately metered. An FIBC can perform the function of a mobile hopper. Compared to conventional 50-lb bags, FIBCs are less labor-intensive and do not involve manual handling that can cause back injuries. They are less expensive and require less space to pack. They are quicker to fill, handle, and discharge. And they reduce the risk of product loss, contamination, and pilferage.

BIBLIOGRAPHY

1. United States Government, "Intermediate Bulk Containers for Hazardous Materials, Final Rule, 49 CFR Part 171 (HM 181-E)," *Fed. Reg.*

General References

"As Easy as FIBC," *Hazardous Cargo Bull.*, 62–63 (September 1993).

British Standards Institute, "Flexible Intermediate Bulk Containers: Specification for Flexible Intermediate Bulk Containers Designed to be Lifted from Above by Integral or Detachable Devices," BS 6382, Part 1.

J. Clifton, "FIBC Quality and Safety—Mandatory European Standards Debate Begins," *Internatl. Bulk J.* **11**(3), 36–50 (1991).

Flexible Intermediate Bulk Containers / Big Bags, Loadstar Publications, London, 1988.

A Guide to Selecting Bulk Bags and the Equipment to Utilize Them, Taylor Products, Parsons, KS, 1986.

Flexible Intermediate Bulk Container Association, *Common Sense Handling Guidelines for Flexible Bulk Containers*, www.fibca.com.

"Guidelines for Selecting Bulk Handling Containers," *Modern Materials Handling*, **40**(9), 62–64 (1985).

International Standards Organization, "Packaging. Flexible Intermediate Bulk Containers," ISO/TC 122/SC 2 N 238.

Japanese Industrial Standards, "Flexible Intermediate Bulk Containers," 1988.

United Nations, "United Nations Recommendations on the Transport of Dangerous Goods" in *Intermediate Bulk Containers*.

BAGS, MULTIWALL

ALLAN M. BAYLIS
Amber Associates, Jamesburg, New Jersey
Updated by Staff

INTRODUCTION

Multiwall bags are concentric tubes of 2–6 layers or paper with a choice in the type of end closure. Designs differ mainly with respect to whether the sack is to be filled through an open mouth or valve. This depends on the product or volume to be handled. Valve designs are closed automatically as a consequence of their design and there are various methods, including sewing and tying for the closing of the open mouth paper bag.

Prior to the United States Civil War, two industrious merchants in upstate New York, Arkell and Smiths, had been looking at cotton sacks to ship flour and grains to the larger southern cities; and from this vantage point, they were also investigating the use of paper sacks for marketing flour. Arkell received the first U.S. patent for paper sack making machines in the 1860s; this was just in time to permit paper sacks to replace the difficult-to-obtain cotton bag fabric during the war.

At the same time, salt was being packaged and marketed in cotton bags, until the 1890s, when Adelmer Bates developed a concept wherein a "valve" was incorporated into one corner of the cotton bags. Its advantages provided a faster method of filling cotton bags with salt, and it was patented in 1899. In 1901 John Cornell worked with Bates on the development of a valve sack filling machine, and in 1902 they were awarded a patent on a valve for paper sacks, but almost two decades passed before the paper shipping sack was widely used.

In 1919 R. M. Bates, Adelmer's brother, was visiting in Norway, where he saw a paper sack of a truly different construction. Having five walls made from long strips of kraft paper with each edge of the strip pasted to its adjacent edge, it formed tubes of paper. These were cut to length and were open at both ends. At the place where they were to be filled, one end was gathered together and tied off; when filled, the top end was also tied with twine or wire. These were flat paper tubes.

While Bates was working on his ideas of filling these tubes through the valve corner, his partner Cornell conceived the idea of having valve corners inserted into a gusseted tube, or “in-fold” feature. These were first made in the mid-1920s, and their advantages were promptly recognized. During the first year of production, millions were manufactured and sold, and by 1927 about 130 million were made annually.

While the cotton bags with their paper-filling sleeves had solved the bag-filling problem, the other problem of their return and reuse to reduce bag costs still existed. Into this breach came the multiwall paper sacks (either with or without filling sleeves), and thus the paper shipping sack industry was born.

Portland cement and masonry cement plants, grain products and flour factories, and saltworks were the earlier multiwall sack users, because these new bags solved the dusty conditions that had been so dangerous, healthwise. Now the workers were freed from breathing undesirable dust and airborne mineral deposits, and working conditions were greatly improved.

The terms *multiwall bags* and *paper shipping sacks* are often used synonymously. Other industries followed suit as soon as more producers of multiwall bags were established, and the shipping sack industry prospered accordingly. World War II caused severe shortages in burlap and manila fibers due to the extremely long distance from the primary sources in Southeast Asia; concurrently, cotton fiber for bags was in short supply, due to U.S. military and naval needs (as well as for civilian clothing). These shortages resulted in a large expansion of the use of paper shipping sacks, and the cotton bag never recovered its earlier dominance, just as cotton and burlap had replaced the rigid containers such as wood boxes, crates, and barrels.

During World War II the multiwall bag really came into common useage. With a wide range of special papers to control moisture and insect infestation plus the ability to tailor-make whatever package strength was required to fit the rough military handling, multiwalls came to be the approved specification packages for government purchasing.

From these early beginnings the sack industry has grown into a multi-billion-dollar business with shipments of over three billion sacks annually for over 2000 different products in the United States. Over four billion sacks are used annually in Europe (1). These end-uses fall into four major categories: agricultural products and supplies, food products, chemical products, and rock and mineral products.

The primary advanges of paper shipping sacks are low tare weight, flexibility, ease of filling and handling, low cost, minimum storage space, biodegradability, and good graphics. Other advantages include the basic material, which is a renewable resource; protection of contents from moisture absorption; control of contents from moisture loss; protection of contents from chemical action; control of seepage or penetration of hot-packed products; provision of loss of gas or vapor; prevention of product sifting or contamination; good stacking and utilization of warehouse space; FDA approval for human food products; excellent graphics; and ease of use in merchandising displays.

Multiwall bags exclude single-ply bags and bags of duplex construction, but do include those with three or more plies of paper or other barrier protectors. They are produced by combing several layers of paper (or other substrate) over a metal former that nests the walls into a long continuous tube (flat or gusseted). These walls are bonded together with adhesives so that each tube is independent of the other tubes, and therein lies the bag’s strength. The tubes may be cut straight (all at once) or in stepped-end formation where each wall is first perforated, then simultaneously snapped apart.

Next, in order for the tubes to be filled and used, the tubes are delivered to bottoming machines in the bag plant where they are either sewn closed at one or both ends. Or, the tubes may go to a pasting bottomer to form either pasted open-mouth, stepped-end pasted valve, or pinch-bottom open-mouth sacks (see Figure 1).

TYPES OF MULTIWALL SACKS

There are two basic multiwall types: the open-mouth type and the valve type bags. Multiwalls are custom-made to order according to the customer’s requirements and for adequate strength to ensure the safe arrival of their contents to the destination locations.

Whether the product is packaged with high-speed open-mouth weighing and filling machines with automatic closing and sealing machinery, or with even faster valve packers and automatic bag placers, a proper and successfully designed and printed multiwall bag may be readily developed.

Most multiwall bag suppliers have very well trained sales personnel, as well as experienced factory technical representatives with a wide range of user experience who are well qualified to recommend the best bag for any product requirement.

OPEN-MOUTH BAG TYPE

Sewn Open Mouth (SOM)

This style, with any number of walls, has a factory sewn bottom and open top, and may be either flat or with side gussets. These bags are used primarily to package granular or large-particle products. The product is delivered into the open top, and the top may be closed by sewing or other means. If a polyethylene liner ply is specified, this may also be heat-sealed. These types of packaging lines may be fully automated.

Pasted Open Mouth (POM)

This style has a pasted bottom and open-mouth top, and it is sealed after filling by folding and pasting, or, in some cases, sewing the top. This latter style is not preferred for packaging and shipping free-flowing products because a finlike (nonflat) package is obtained. But it is ideal for containing a number of previously filled and sealed unit bags–for example, 12.5-lb sugar or 5- to 10-lb bags of potatoes. These are called *master container or baler bags*.

Pinch-Bottom Open-mouth (PBOM)

This style has the plies cut in a stepped fashion with the bottom sealed by gluing or heat sealing at the bag factory.

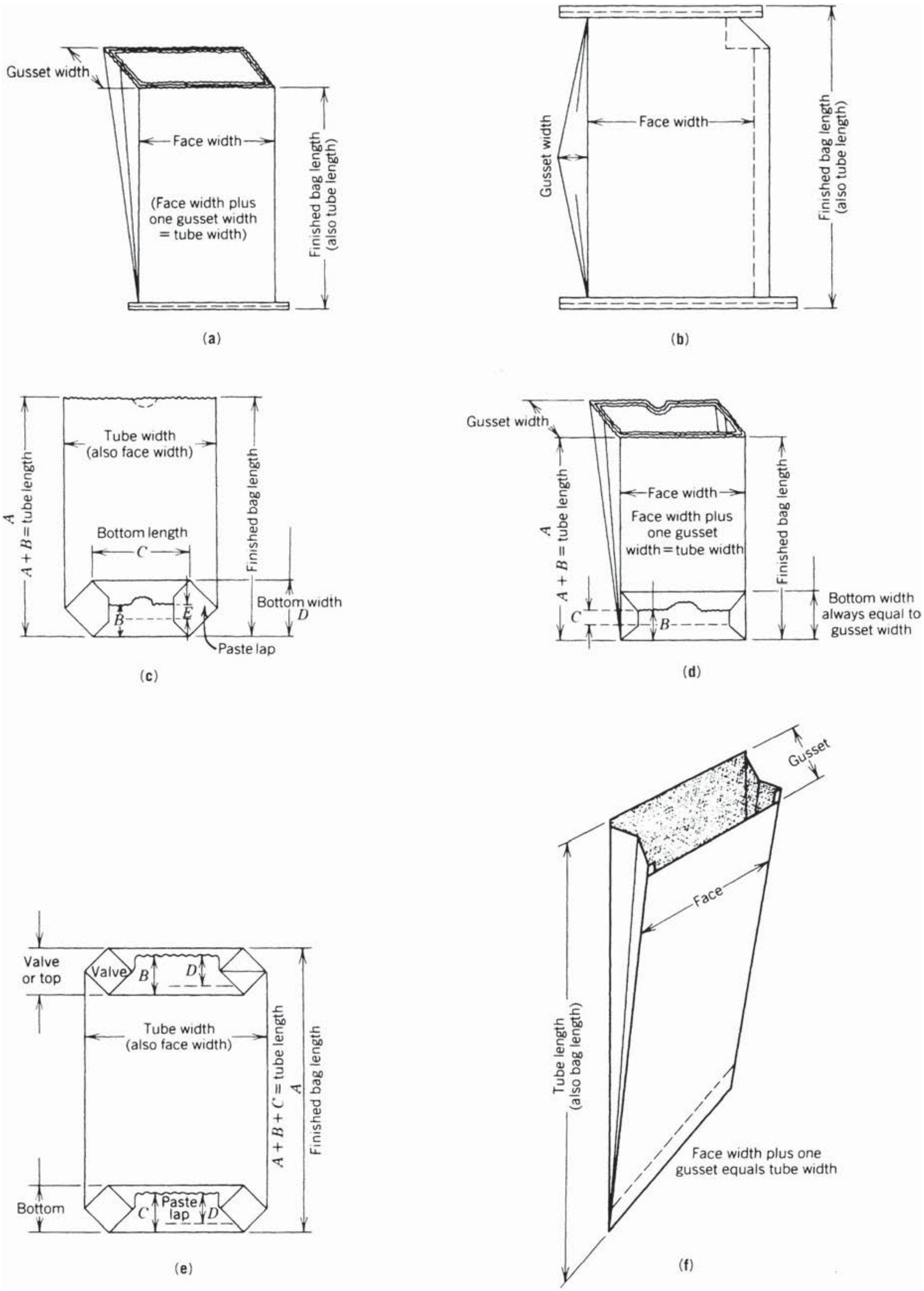

Figure 1. Common bag styles in current use: (**a**) sewn open-mouth; (**b**) sewn valve, (**c**, **d**) pasted open-mouth; (**e**) pasted-valve stepped-end; (**f**) pinch-bottom open-mouth.

After filling at the user's plant, the open mouth top is folded over and sealed by reactivating preapplied hot-melt adhesive. This style of bag provides completely moisture-proof and sift-proof packages. PBOM bags are the fastest-growing segment of the total multiwall bag industry because of the secure and strong closure ends, and full control of sifting or infestation.

VALVE BAG TYPE

Sewn Valve (SV)

These are made with the plies at the top and bottom ends sewn at the bag plant usually with sewn-through crepe paper tape. The bags are filled with a valve packing machine by forcing the product through a built-in valve corner. For small particles and large powders, the contents may be retained without any leakage, by hand-folding in the paper valve extension.

This old style with sewn tape at both ends has fallen out of favor in recent years, and the modern pasted valve style has supplanted it.

Pasted Valve Stepped End (PVSE)

As in the pinch-bottom open-mouth bag, the plies are cut off in a stepped configuration; then the bag factory bottoming machine folds and, with adhesive, seals both top and bottom ends of the tubes. An added valve sleeve is built into a corner, permitting rapid bag placement on a valve packer; and when the filled package falls to a take-away conveyor, the valve automatically is closed by the internal pressure of the product.

PVSE-type bags, introduced in 1956, are the present standard package for most automatic or high-speed operations such as cements, powders, feeds, fertilizers, or other chemical or building products. When stacked or palletized, they provide stable and attractive three-dimensional containers.

Valve bags may also be purchased with paper tuck-in sleeves that, when folded in, will control all possible leakage.

SIZING MULTIWALL BAGS

First, the weight to be packaged and the product density must be determined. This latter may be done by using a box of known dimensions (1 ft × 1 ft × 1 ft) or 1 ft^3 to determine the weight per cubic foot. With the known weight and volume requirements and with the bag type selected (by product characteristics), an educated estimated set of dimensions can be offered. A supplier can fine-tune these numbers by offering several handmade factory samples. When test-filled, these may be adjusted to supply a larger number of machine-made test packages to finalize all specifications such as dimensions, filling, handling and shipping, and palletizing conditions.

CONSTRUCTIONS

The paper most commonly used to fabricate multiwall bags is natural-colored virgin pulp brown kraft. Made primarily in the Southern U.S. states using a modified sulfate pulping process, it affords longer fibers that enhance the paper's cross- and machine-direction strength. Typically brown, it may be lightened through bleaching, or semibleaching sulfate pulping.

Kraft is usually designated in basis weights ranging from 40 to 80 lb per ream of 500 sheets of 24 in. × 36 in. in area. These grades are known as *multiwall kraft* and have higher strength specifications than grocery-bag kraft (NK) used for light-duty brown paper bags.

Other popular grades used in multiwall bags are extensible (XTK) and free-dry (FDK) process papers. These developments during the 1960s and 1980s resulted in improved cross- and machine-direction stretch specifications and greater overall bag strength. Other grades, such as high-finish, rough, calendered, machine-finish, and wet-strength, are available for specific end-use purposes (see Paper).

Subsequent to the mid-1940s with the development of tailor-made plastics, polyethylene (PE) films have been integrated into many bag constructions. Prior to this, asphalt laminated kraft (ALK) provided moisture barrier properties to multiwall bags, but it was difficult to fabricate on the tuber and bottoming equipment, and it is no longer in use.

Multiwall paper bags may be lightly coated with high-shear, low-stress adhesives to overcome bag slippage when stacked on pallets or in storage. This inexpensive treatment is invisible yet very effective.

Heavy-duty single-wall plastic film bags are also available, however, when compared in cost with multiple-ply kraft or a kraft paper ply plus a lightweight poly ply or polyethylene-coated kraft, the single-wall plastic bags are not cost-effective. They also are slippery, and palletized filled bags cause shipping difficulties (see Bags, plastic).

Depending on the physical characteristics of the product being packaged in multiwall bags, they can be custom-designed to provide all the protection that is necessary. Low-or high-density polyethylene, poly(vinyl chloride), poly(vinyl dichloride), nylon, saran, foil, and polypropylene are some of the available substrates.

Most multiwall bag suppliers have well-trained sales personnel and specially trained factory technical representatives who are well qualified to recommend the best construction for any particular requirement.

SPECIFICATIONS

With the complete knowledge of a product's physical and flow characteristics, a bag style may be selected. This is only a minor portion of the information required to design a new multiwall bag that will deliver the product in acceptable condition. The product density and the desired weight to be bagged must be known; from this, the required capacity (in cubic inches) is calculated.

General rules are usually followed to select the total kraft paper basis weight and the number of kraft plies. For instance, 50 lb of product might require three walls of 50-lb natural kraft to total 150 lb, and 80 lb would need three or four walls of combined 40- and 50-lb basis weight multiwall kraft, totaling ~180 lb.

The requirements for product protection must be carefully evaluated. This might include moisture protection and control, gas or odor control, grease or oil control, siftproofness, chemical resistance, mold protection, and toxicity or hazardous chemical protection.

Each of these factors can be controlled by the use of one or more of the following available sheets: low-density PE (LDPE), high-density PE (HDPE), polyethylene-coated kraft paper (PEK), saran, Tyvek, saran-coated polypropylene (SCPP), polyfoil–polykraft laminate (PE-AL-PE-K) biaxially oriented polypropylene (BOPP), or even poly-coated crepe kraft tape, or heat-sealed waxed kraft tape. About 25% of the multiwalls now being produced specify some kind of special liner ply.

Special barrier plies are commonly used in multiwall bags to protect the product from gaining or losing its intended moisture content. This is stated in terms of its water vapor transmission rate (WVTR). A wall of material may be laboratory-tested, to determine its WVTR rating in terms of g/m^2 per 100°F at 95% RH (relative humidity) in 24 h. The more effective barriers usually are the heavy 2.5–4.0-mil HDPE and LDPE, or 0.75-mil BOPP film, while those most frequently needed are the less expensive 0.5-mil HDPE and 0.8–1.0-mil. LDPE films.

Some products have specific needs, such as controlled porosity to permit proper air or moisture transfer, grease or oil penetration, wet-strength protection with urea formaldehyde, or melamine formaldehyde, which enable the paper to retain its original strength when saturated by water. All these and more—toxicity, hazardous nature, odor control, acidity, or alkalinity—can be controlled.

Or, for a really attractive consumer package, the manufacturer might select a supercalendered high-finish full-bleached white sheet with gravure-quality printing.

Multiwall prices are developed by applying cost factors for bag style, bag size (sheet width and tube length), basis-weight factors for kraft, and the plies of other substrates. To these the supplier adds the cost for printing by area and number of colors required. Bags are usually ordered by the carload or trailerload to obtain the lowest unit price.

In cases where a product is highly aerated and moisture protection is only nominal, one or more kraft plies may require allover pinhole perforations (AOPHP) of different diameter and spacing. These allow the internal pressure to be expended during bag filling and they prevent bag breakage.

Discussing the particular needs that are required for your product with a multiwall bag supplier will direct you to the correct and complete bag specifications from the weighing and filling stages to the customer's ultimate place of use.

PACKAGING EQUIPMENT

For each style and size of bag used, there is a wide choice of equipment available for weighing, filling, and closing the packages. There are two main styles of bagging equipment: open-mouth and valve.

Open-Mouth Packers

The older, original method of open-mouth bagging required a scale, a vertical delivery spout, and a closing function. With today's modern high-speed open-mouth equipment, there are automatic and accurate weighing scales, automatic bag placers, and finally, automatic bag closures.

These systems usually run up to 20 or more preweighed charges of up to 100 lb of material per minute with only token supervisory requirements. There are two preferred methods of closing open-mouth multiwall bags: sewn closure or heat sealing.

Most common of the sewn types is the stitching of the bag mouth with cotton or polypropylene sewing thread with an industrial sewing head. With more secure or special product requirements, either sewn-through tape, adhesive, or heat-sealed tape over sewing may be provided.

Valve Bag Packer

With the invention of the valve packer in the mid-1920s, the valve-style bag may be filled by forcing the product through a spout (usually horizontal) into the valve corner and then down into the bag. The product is either preweighed and then forced into the bag, or it is weighed in the package (gross-weighed).

Choices are available when weighing and filling valve bags, and they depend on the product's physical characteristics, price, and production speed requirements.

Most valve packers use either the impeller-wheel method or the belt-feed method. With the former, rotating high-speed paddles force the material into the package. This causes a great amount of aeration to occur, and the PV or PVSE bags must be capable of withstanding great pressure. One operator with a four-spout impeller valve packer may produce up to thirty 94-lb (206-kg) filled bags per minute.

With the belt valve packer, the product is thrust between a moving belt and a rotating grooved pulley and then into the valve opening. This is gentler on the material, but not as fast as the impeller method. Fertilizers and small-pelleted materials are usually packaged on belt-style valve packers.

Three other less popular valve packer styles are available auger, gravity, and airflow. The latter is more modern than the other two and has the advantages of handling non-free-flowing finely powdered materials, without degradation with much better accuracy. The auger packer utilizes a horizontal screw within a hollow tube. These work well for non-free-flowing products, and since the screw's rate of rotation can be adjusted, better weight accuracies are obtained. The last and least popular valve packing method is the vertical-gravity style. But, since it is used for very free-flowing or inexpensive materials, accurate bag weighments are sometimes difficult to obtain.

GRAPHICS

Previously, the fabrics of multiwall paper bags were printed with simple yet effective designs to identify the manufacturer, the product, the net weight, and some methods for using the contents.

Cotton and burlap bags had a second life, since they must either be returned, cleaned, and filled for reshipment or, in the case of the cotton bags, be washed and then sewn into towels or items of apparel at home.

With the conversion from fabric to paper bags came the important advantage of superior printing capabilities. With smooth surfaces and all-around six-sided printing of up to four colors, a company's marketing message could be extolled, thereby differentiating itself from all its competitors.

If brown kraft is not attractive enough, a supplier can readily furnish semibleached (SBW) or full-bleached (FBW) kraft. Smoother or brighter papers and coatings in conjunction with modern printing capabilities provide appealing and forceful advertising that make the bags effective billboards for marketing their contents. Whether they were small-unit consumer bags or large industrial-size bags, they can utilize flexographic printing to carry the intended messages.

If more definition is required, prepress gravure printing using up to six colors will result in photographic quality printing, with the following advantages: excellent product and protection; unlimited supplier capabilities; biodegradable materials; and proven shipping and storage environments

Pet-food and charcoal briquette bags are excellent examples of effectively printed packages found in all supermarket shelves today.

Multiwall bags are readily accepted and desirable as shipping containers in all domestic and export markets, including hundreds of uses for agricultural products, building materials, chemicals, food products, and minerals.

TRANSPORTATION

In the past 40 years the shipment of filled multiwall bags to the market where they are used has swung almost completely from railroad boxcars to over-the-road trailers or straight trucks. Also, pallets have replaced the individual handling of filling bags. Coincidentally, plastic film has in many cases been incorporated into the bag's construction. These changes have resulted in lighter basis-weight requirements and lower costs. Multiwall sacks are covered by the Uniform Freight Classification for Rail Rule 40; National Motor Freight by Truck Item 200; Hazardous Materials Regulations title 49 CFR; and Federal Specifications UUS-48, sacks for government shipment (2).

ENVIRONMENTAL CONSIDERATIONS

At present, the essential element in all paper sacks is virgin fiber. Secondary or recycled fiber is not an option because such material can result in an inconsistent pack that would be weaker and unsuitable for automated filling and in handling systems. The bags would be more costly to produce and in many cases would be unacceptable for direct contact with food. As a result of continuous research, there has been substantial reductions in the average construction weight of a multiwall paper sack. Recovered bags can be recycled. It has been suggested that specifications should be revised to maxmize the content of secondary fber. A levy on virgin fiber has been proposed in Europe.

USES

Some examples of products that are packaged in weights of under 20 lb are additives, animal food, baking products, cat litter, charcoal, chemicals, coffee, cookies, dried foods, grits, insecticides, microwave popcorn, plant food, theater popcorn, salt, and sugar. Industrial products weighing more than 20 lb and packed in multiwall bags are absorbents, abrasives, cement, lawn and garden supplies, and animal feeds (3).

Helpful Hints. The list below is meant to be of use to a packager in selecting an appropriate multiwall paper sack.

1. In the initial planning stage of a new use for multiwall shipping sacks, obtain the guidance of bag suppliers.
2. Develop accurate product physical and chemical properties.
3. Finalize decision on desired package weights.
4. Determine annual production requirements.
5. Select proper bag style and features.
6. Consider styles of packaging equipment available.
7. Decide on the transportation and distribution modes.
8. Determine probable bag sizes and constructions.
9. Plan bag transporting methods to provide minimum individual handlings.

BIBLIOGRAPHY

Allan M. Baylis,"Bags, Multiwal" in *The Wiley Encyclopedia of Packaging,* 2nd edition, by John Wiley & Sons, New York, 1997, pp. 61–66.

Cited Publications

1. The Environmental and Technical Association for the Paper Sack, "Multiwall Paper Sacks" in M. J Kirwan, ed., *Paper and Paperboard Packaging Technology,* Blackwell Publishers, London, 2005.
2. *Transportation Regulations*, Paper Shipping Sack Manufacturer's Association, Inc., Coopersburg, PA, www.pssma.com, accessed June 2008.
3. *End Uses,* Paper Shipping Sack Manufacturers Association, Inc., Coopersburg, PA, www.pssma.com, accessed June 2008.

BAGS, PLASTIC

Plastic bags, available in virtually all shapes, sizes, colors, and configurations, have replaced paper in most light-duty packaging applications. Paper has been more difficult to replace in heavy-duty applications (see Bags, heavy-duty plastic). Light-duty plastic bags are generally described in one of two ways: by the sealing method or by application. This article explains the methods used to produce plastic bags and defines the various types of plastic bags in terms of their intended use. A plastic bag is defined here as a bag manufactured from extensible film (see Films, plastic) by heat-sealing one or more edges and produced in quantity for use in some type of packaging application.

METHODS OF MANUFACTURE

By definition, all plastic bags are produced by sealing one or more edges of the extensible film together. The procedure by which this heat-sealing occurs (see Sealing, heat) is typically used to identify and categorize types of plastic bags. Three basic sealing methods are used today that include the following: sideweld, bottom seal, and twin seal.

Sideweld Seal. A sideweld seal is made with a heated round-edged sealing knife or blade that cuts, severs, and seals two layers of film when the knife is depressed through the film material and into a soft rubber backup roller. The materials are fused by a combination of pressure and heat (see Figure 1).

The sideweld seal is the most common bag-sealing method. Typical high usage bags, e.g., bread bags and sandwich bags, are produced using the sideweld technique. The term “sideweld” is derived from the fact that many of the bags produced in this fashion pass through the bag machine with the length (or depth) of the finished bag perpendicular to the machine floor. The film fed into the machine is either prefolded, i.e., J stock, or folded during the in-feed process (see Figure 2).

Bottom Seal. The bottom-seal technique seals the bag at the bottom only. Tube stock is fed into a bag machine, the single seal is produced at the bottom of the bag, and the bag is cut off with a knife action that is separate from the sealing action. A bottom seal is generally made by a flat, heated sealing bar, which presses the layers of film to be sealed against a Teflon (Du Pont)-covered rubber pad, i.e., seal pad (see Figure 3), or another hot-seal bar (see Figure 4). A separate cut-off knife is used to separate the bag from the feedstock while the seal is made or immediately thereafter. Both bottom-seal mechanism designs produce a bag with only one seal, unless the tube has been manufactured by slit-sealing (see below). The small amount of unusable, wasted film between the edge of the seal and the cutoff point, called the “skirt” of the bag, is an important factor in the total cost of the bag. Any disadvantages caused by the presence of the unwanted skirt are usually offset by greater control of the sealing process. The sideweld method actually melts through the plastic film, and overheating of the film resins can change the physical structure of the plastic molecules when the seal cools. In contrast, the bottom-seal method controls the amount of heat and the dwell time, i.e., the time that the heat is applied to the film, to produce a seal that does not destroy the film or change its physical properties. In addition, the total amount of film sealed together is usually larger, because the seal bar has a fixed width and none of the film material is melted or burned away.

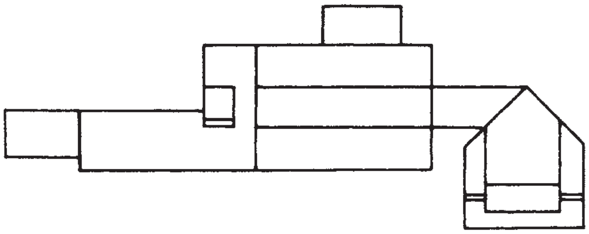

Figure 2. Sideweld process (top view).

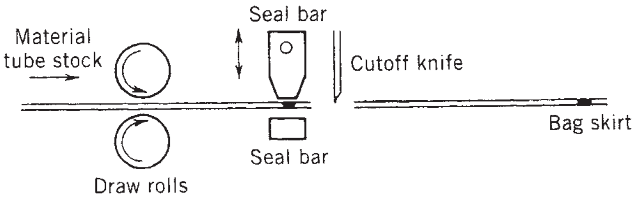

Figure 3. Bottom-seal mechanism (top heat only).

The bottom-seal method is commonly used to produce (HDPE) merchandise bags and (LDPE) industrial liners, trash bags, vegetable and fruit bags, and many other types of bag supplied on a roll. In contrast to the sideweld method, designed primarily for high-speed production of bags made from relatively light-gauge films — i.e., 0.5–2.0 mil (13–51 μm)—bottom-seal methods are often used to produce bags from film from 0.5 to ≥ 6 mil (13–$\geq 152\,\mu$m) at slower production speeds. Bags manufactured by bottom-seal methods are delivered through and out of the bag machine with the length (or depth) of the bag parallel to the machine direction. Because all of the bags

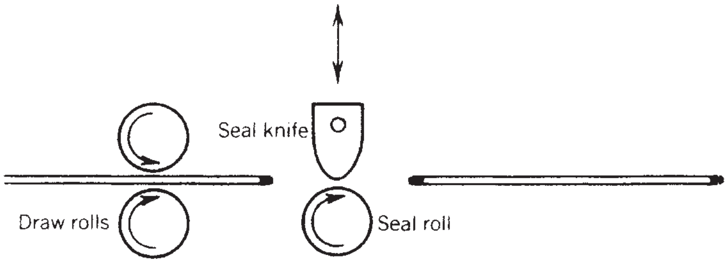

Figure 1. Sideweld-seal mechanism.

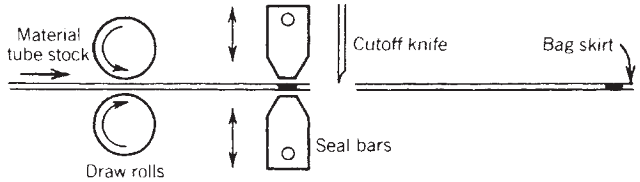

Figure 4. Bottom-seal mechanism (top and bottom heat).

are produced from tube sock, multiple-lane production of bags is limited only by the widths of the machine and the bags and the film-handling capability of the bag machine (see Figure 5).

Twin Seal. The twin-seal method employs a dual bottom-seal mechanism with a heated or unheated cutoff knife located between the two seal heads (see Figure 6). The unique feature of the twin-seal mechanism is that it supplies heat to both the top and bottom of the film material and makes two completely separate and independent seals each time the seal head cycles. Like the bottom-seal method, the twin-seal technique can supply a large amount of controlled heat for a given duration. This ability makes the twin seal useful in sealing heavier-gauge films as well as coextrusions and laminates. Because two seals are made with each machine cycle, the twin-seal method can be used to make bags with the seals on the sides of the finished bag, i.e., like sideweld bags, or on the bottom of the bag in some special applications, such as retail bags with handles. Many special applications call for the use of a twin-seal-type sealing method, but it most often is used in production of the plastic “T-shirt” grocery sack.

Slit Seal. Another type of sealing method, the slit seal, involves sealing two or more layers (usually only two) of film together in the machine direction through the use of a heated knife, hot air, laser beam, or a combination of methods. The slit-seal technique is usually used to convert a single large tube of film into smaller tubes. In the production of grocery sacks, for example, a single extruded 60-in. (152-cm) lay-flat tube of film (see Extrusion) can be run through two slit sealers in line with the bag machine. This process results in three tubes of 20-in. (51-cm) lay-flat material being fed to the bag-making system (see Figure 7).

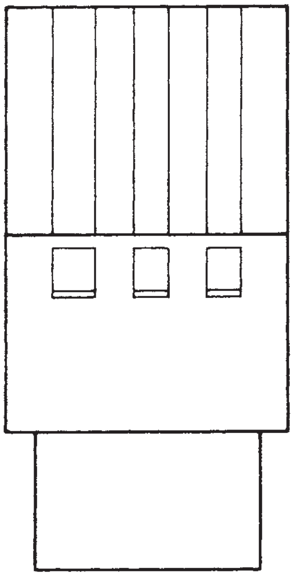

Figure 5. Bottom-deal bag machine, three-level.

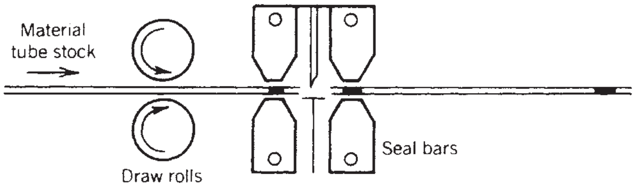

Figure 6. Twin-seal mechanism.

APPLICATIONS

Most plastic bags are characterized in terms of their intended use, e.g., sandwich bags, primal-meat bags, grocery sacks, handle bags, or bread bags. To provide some order to this user-based classification and definition system, it is convenient to separate the bags into commercial bags and consumer bags.

Commercial Bags. A commercial plastic bag is used as a packaging medium for another product, e.g., bread. Typical commercial bags and seal methods are listed in Table 1.

Consumer Bags. Consumer bags are purchased and used by the consumer, e.g., sandwich bags, trash bags. The plastic bag is the product. Typical consumer bags and seal methods are listed in Table 2.

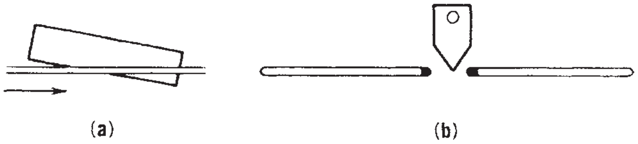

Figure 7. Slit sealer (hot-knife type). (**a**) side view; (**b**) top view.

Table 1. Commercial Plastic Bags

Sealing Method	Types of Bag
Sideweld	Bread bags, shirt and millinery bags, ice bags, potato and apple bags, hardware bags
Bottom seal	Vegetable bags on a roll, dry-cleaning bags, coleslaw bags, merchandise bags
Twin seal	Primal-meat bags, grocery sacks[a]

[a] With dual bottom seal.

Table 2. Consumer Plastic Bags

Typical Sealing Method	Types of Bag
Sideweld	Sandwich bags, storage bags
Sideweld or bottom seal	Trash bags, freezer bags, can liners
Bottom seal	Industrial liners

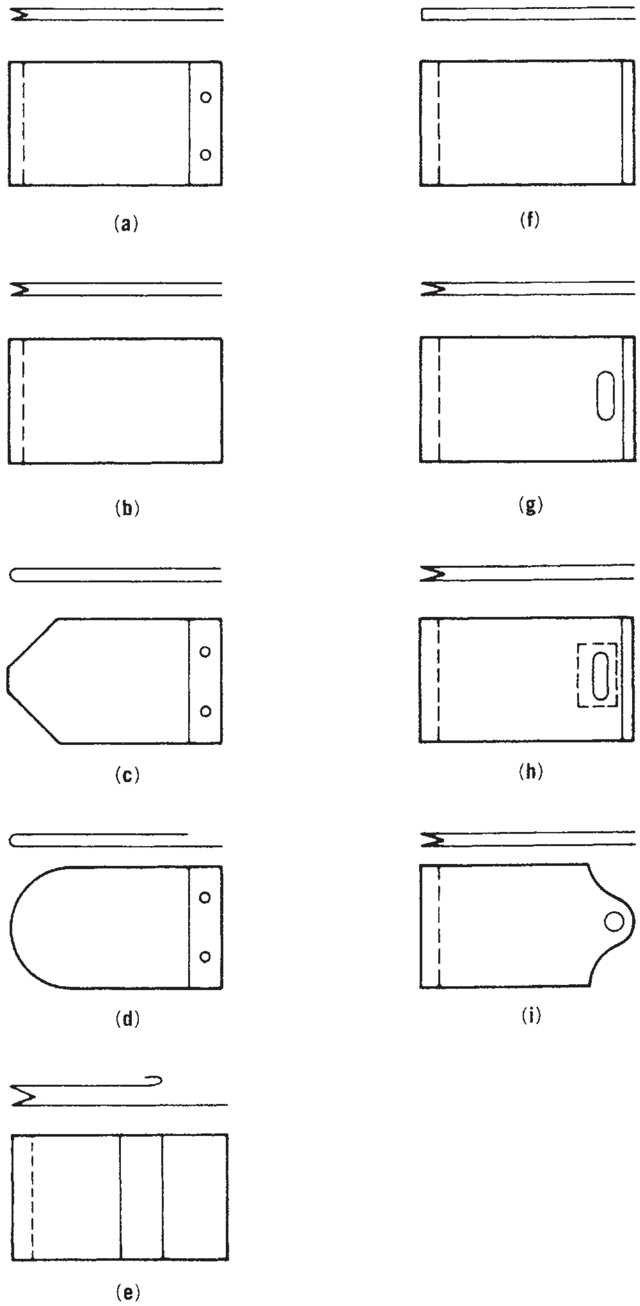

Figure 8. Bags, plastic: (**a**) conventional wicket bag; (**b**) conventional bag; (**c**) square-bottom bag; (**d**) round-bottom bag; (**e**) sandwich bag; (**f**) trash bag; (**g**) handle bag; (**h**) patch-handle bag; and (**i**) sine-wave bag.

In addition to the conventional bags, an enormous variety exists of special bags that have been created by bag producers to meet commercial and consumer needs. These bags are usually described as specialty bags, but they are all variations of the standard bags described above. Specialty bags include rigid-handle shopping bags, sine-wave handle bags, pull-string bags, patch-handle bags, double-rolled bags, square-bottom bags, round-bottom bags, deli bags, etc. Examples of both common and specialty bags are shown in Figure 8.

BIBLIOGRAPHY

"Bags, Plastic," in L. L. Claton, ed. *The Wiley Encyclopedia of Packaging Technology*, 1st ed., Wiley, New York, by FMC Corporation, 1986, pp. 39–42.

General References

"Bag Making: Inline or Off-Line," *Plast. Technol.* **30**(2), 55 (1984).

L. R. Whittington, *Whittington's Directory of Plastics*, 2nd ed., Technomic Publishing, Lancaster, PA, 1978.

Polyethylene Film Extrusion, U.S. Industrial Chemicals Co., New York, 1960.

BANDS, SHRINK

David R. Kopsilk
Ed Fisher
CMS Gilbreth Packaging
Systems, Trevose, Pennsylvania
Updated by Staff

INTRODUCTION

Shrink labels, bands, and sleeves provide today's packaging companies with a unique and versatile method for labeling their products. Developed in Japan during the 1960s, shrink bands became popular in the United States in the early 1980s, mainly as unprinted or one-color tamper-evident neckbands. Today, the shrink band is used as a primary label, as a decoration, for multipack applications, and as a traditional tamper-evident feature. The high-quality printing and gloss inherent in shrink labels ensure packagers that their product will generate tremendous visual shelf appeal.

MANUFACTURING

Shrink bands are generally produced using special poly (vinyl chloride) (PVC) films, although PETG films, oriented polystyrene films, and poly(lactic acid) are also used (1). Film thicknesses generally run from 1.25 to 3.0 mils, with 1.50 and 2.0 mils the most prevalent. Material is available in two varieties: seamed film, and tubing. *Seamed film* is converted by bonding a flat sheet of printed or unprinted material into a sleeve configuration. This is achieved through a process of solvent seaming into the desired dimension or flat width. *Tubing* is extruded into the desired flat width before printing. Seamed film can be reverse printed with 360° graphics and generally provides more consistent dimensions in both flat width and gauge profile. Tubing is generally less expensive, and it is used for unprinted or one-color work.

Important dimensional measurements associated with shrink bands are (a) flat width, which represents the dimension relating to the diameter or circumference of the container, and (b) cut height or impression height, which represents the length of the container or the length of the section of the container to which the shrink band will be applied. These dimensions are usually expressed in millimeters.

The inherent shrink is imparted into the material in a heated stretching process. With tubing, this is achieved during the initial extrusion process. With seamed film, a process known as *tentering* is used. A tenter frame is a modified oven that uses a combination of airflow and temperature zones to orient the material. For example, a 30-in.-wide roll of 5.0-mil material will be converted into a 60-in. roll of 2.0- or 2.5-mil film. Shrink ratios of 50–70% can be achieved by adjusting the process. Various ratios are used, depending on the contour of the container being labeled.

Shrink bands are generally processed using the gravure printing method. Reverse rotogravure allows the image or copy to be printed on the back side of the film, which results in a glossy look to the package as well as protection of the image from scratching or scuffing that may occur in final packaging or distribution. Gravure printing provides excellent color reproduction consistency, high speed, and productivity, and it is an excellent method for printing smooth film surfaces. Flexo printing has made inroads into this market as the technology improves, but gravure is still dominant.

After printing, several other features can be added to the shrink band. Vertical and horizontal perforations, as well as tear tape strips, can be added to make the band removable for the consumer. Some packagers use a horizontal perforation to make part of the label removable, the tamper-evident feature is removed, and the primary label stays on the container. Some examples of this are toothpaste pumps, lip balms, syrups, and salad dressings. Bands can be provided in continuous roll-fed form, or in individual cut pieces for manual application.

APPLICATION

Bands can be applied manually or by automatic machinery. Machinery on the market today is capable of applying bands at speeds of 500 per minute or more, depending on container size, container contour, and label dimensions. For example, a lip-balm label of approximately 27-mm flat width and 60-mm length can be applied faster than a 190-mm-flat width, 40-mm length band for a large dairy container, due to both the label size and the container size. Machinery is dominant in the dairy, packaged-food, and pharmaceutical markets. Most machinery applies shrink bands in a horizontal method, but recent developments have allowed for vertical application of pen barrels, lip balms, and other small cylindrical objects. Most machinery requires material of 2.0 mils or more for processing, and the use of a wedge or other device to open the material before application is common. After application, the container is sent through a heat tunnel, which uses a combination of airflow and heat to shrink the band securely onto the container. A dwell time of 3 s at roughly 300°F is used for most applications, although some products require an elaborate system of varying temperatures and product rotation to achieve the desired effect.

Machinery is available to pack two containers together with one band. This process is used in lieu of an overall bundling method, which then may require the application of another printed label for bar coding or to convey the promotional message. Manual applications are used when product volume is small or in market trial introductions.

Since shrink bands adhere using shrink energy, no glue or glue applicating systems is required to apply shrink bands.

USES

Shrink bands are generally used in three ways: as tamper-evident neck bands, as primary labels and decorations, or for promotional multipacking (see Figure 1 for examples). Food and pharmaceutical packagers have been using neckbands as a tamper-evident feature ever since the Tylenol incident in Chicago in 1982. They are often used in conjunction with vacuum packaging, inner seals, and breakaway closures for product integrity. One advantage for consumers is that neckbands provide evidence of tampering before the consumer brings the product home, as any attempt at removal is evident on the store shelf. In the food-packaging market, yogurt, sour cream, salad dressing, mayonnaise, syrup, mustard, and jelly are just some examples of products that use neckbands (2). In the pharmaceutical and health–beauty arena, use of neckbands is even more prevalent. Eye care, mouthwash, cough syrup, pain relief, and vitamins as well as many ethical medicines are among the products that utilize this tamper-evident feature (see Tamper-Evident Packaging).

In the primary label and decorating market, shrink bands provide a versatile and unique way to package various products. The reverse printing capability allows graphics to stand out on the store shelf as well as provide durability. Batteries have been labeled using shrink film for years, because the fine copy and metallic look required on these products are achievable with shrink labels. Lip-balm labeling combines a primary and tamper-evident label using a horizontal perforation for easy removal of the tamper-evident feature. Since this product is often sold loose at drug and convenience-store checkout counters, the lip-balm package can be easily displayed without any further packaging. In recent years, writing instruments decorated with multicolor graphics have become popular, especially those with designs targeted to the teenage market. One advantage of shrink labels on this product is that the reverse printing protects the image from the oils and dirt that occur naturally on people's

Figure 1. Examples of commercial uses of shrink bands.

hands, which can erode an image directly printed on a writing instrument. Other products using shrink bands as primary labels or decorations are Christmas ornaments, Easter egg decorating kits, children's shampoos and soaps, deodorant sticks, plastic baseball bats, golf clubs, yarn and thread spools, craft paints, and tobacco containers. Seal-it Inc offers holographic labels (3).

Full-body sleeves cover 360° of a product from top to bottom., and they provide the maximum promotional area. Perforations are available that are easily removed, but the label remains on the containers. Up to 10 colors are available (2).

A third use of shrink labels is for multipacking purposes. Two or more products are bundled together using a shrink band. Printing the bands eliminates the need to apply a paper label later in the distribution process. Two products are placed side by side, and the label is applied vertically over the top. It is not uncommon to put two different products together. Examples of this would be 16 oz of shampoo and a trial size of conditioner, or mouthwash and a toothbrush. When three containers are banded, placing the products in a triangle configuration provides for a more secure package, because this prevents the third product from falling out of the middle. Just about any product can be packaged this way; some common uses are for packaging of hair-care products, vitamins, car-care products, lubricants, peanut butter, caulking compounds, and cooking sauces. Three tubs of baby wipes are stacked on top of each other and vertically sleeved using a shrink band. Most multipacks are done manually, and almost any product or container allows for this banding method. Basic uses for multipacks are trial sizes, values, twin packs, buy-one-get-one-free, and seasonal promotions (4).

Shrink bands will continue to provide packaging companies with a unique method of labeling their products. The double benefit of increased tamper evidence and integrity along with attractive graphic impact is beneficial for almost any product. Shrink bands will continue to grow as a labeling method in the beverage, industrial, and toy markets as well as maintaining an important position in the traditional food, health and beauty, and pharmaceutical markets.

BIBLIOGRAPHY

D. R. Kopsilk and E. Fisher, "Bands, Shrink" in A. J. Brody and K. S. Marsh, eds., *The Wiley Encyclopedia of Packaging Technology,* 2nd edition, Wiley, New York, 1997, pp. 69–70.

Cited Publications

1. "Shrink Bands and Sleeves," www.servipak.com, September 2008.
2. J. C. Brennan and B. P. F. Day, in J. G. Brennan, "Packaging" ed., *Food Processing Handbook,* Wiley-VCH, Weinheim, Germany, 2006.
3. "Shrink Bands," www.sealit.com, September 2008.
4. "Multipack Bands," www.mpilabels.com, September 2008.

BARRELS

Frank J. Sweeney
Sweeney Cooperage Ltd.

A barrel, or cask, is a cylindrical vessel of wood that is flat at the bottom and top, with a slightly bulging middle. The three primary parts of a barrel are heads (bottom and top), staves (sides), and hoops (rings that bind the heads and staves together) (see Figure 1). Specifications are contained in the Department of Transportation regulations (1).

In architecture and physics, the arch is probably the stongest possible structure. The more pressure or weight exerted on the top (keystone) of the arch, the stronger the arch becomes.

The wooden barrel is designed according to the double-arch principle of strength. Like an egg shell, it is doubly arched, both in length and girth. The bend in the stave's length is the first arch, and the bilge circumference of the stave's width is the second arch. These arches impart great strength.

There are three basic cooperage operations: logging the timber, milling the logs, and assembling the barrel staves and heading material. Saws reduce the logs to length, produce edge-grained pieces of cylindrically shaped and jointed wood for the staves, and produce flat pieces of wood for the heading. In recent times, staves have been quarter-sawn as opposed to earlier cylindrical-sawn staves. The

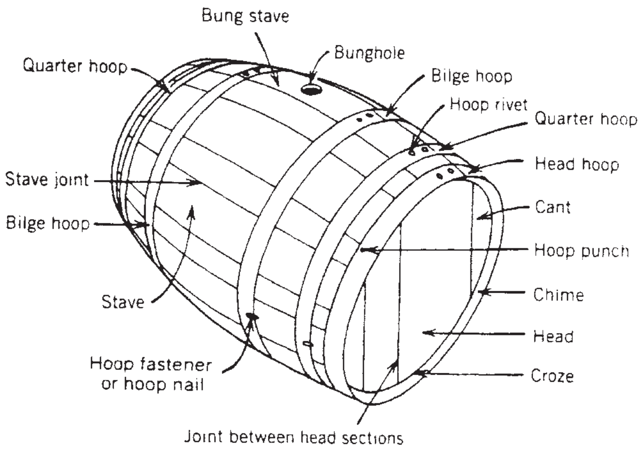

Figure 1. The wooden barrel.

quarter-sawn straight staves are planed interiorly and exteriorly throughout their thickness to achieve a stave of cylindrical width. After the wooden material has been air- and/or kiln-dried to approximately 12% moisture content, the staves and heads are assembled into steel-hoop-bound barrels. Assembly operations include: setting up staves; steaming and winching staves to achieve the belly, bilge, or circumference arch; heating to make wood pliable and give one last drying after being steam bent; tapping out for uniform thickness; trussing to tighten stave joints; crozing interior grooves in each end of the staves where the heads will be inserted; heading up by inserting heads in the croze at each end of the staves; hooping up by driving riveted-steel hoops onto exterior of staves; boring for testing, lining, and future filling; bunging up the bored hole; and rolling the barrel out to the marketplace.

Dozens of species of timber from all over the world have been used to make tight (for liquid) and slack (for non-liquid) cooperage. Hardwood barrels for spirits and wine include oak timber from Limousin and Nevers in France; Alastian and Italian oak; and fork-leafed American white oak, found principally in the slow-growing forest regions of the United States of Missouri, Indiana, Tennessee, Kentucky, and Arkansas. Virtually all of the wooden barrels made in the United States today [1–2 million (10^6)/yr] are 50-gal (189-L)-capacity barrels used by the bourbon whisky trade. Barrels for bourbon are charred interiorly about 1/16 in. (1.6 mm) of their 1 in. (25.4 mm) thickness to bring out the tannin in the wood. Tannin aids in the coloring and flavoring of spirits and wine.

Wooden barrels have had numerous names, depending on their size and use. A small sampling of these names include: pickled-pig's-feet kit; fish pail; one-quarter, one-half, and full-beer ponies; hogshead; salmon tierce; tallow cask; rum puncheon; and port wine pipe. A list of common international cask sizes is presented in Table 1 (2).

Just as the wooden barrel replaced the crude basketry used centuries ago, many other types of container have replaced the wooden barrel: steel and fiber drums, plastic pails, aluminum and steel cans, fiberglass and cement tanks, and so on; aluminum and stainless steel replaced wood for beer barrels (3).

Table 1. Wooden Casks for International Shipments of Alcoholic Beverages

Beverage	Name	Gallons[a]	Liters[a]
	Wine		
Sherry	Butt	137.5/140	500
	Hogshead	67.5/69	250
Port	Pipe	145/147.5	53
	Hogshead	72.5/74	265
Vermouth	Hogshead	67.5/70	250
Burgundy	Hogshead	57.5/60	215
	Spirits		
Rum	Puncheon	137.5/144	520
	Hogshead	67.5/72.5	255
	Barrel	50	180
Brandy	Hogshead	77.5/79	280
	Quarter case	39/40	140
Beer	Butt	135	500
	Hogshead	67.5	245
	Barrel	45	165
	Kilderkin	22.5	82
	Firkin	11	41
	Pin	6	20

[a] Gallon (U.S.) and liter sizes are not equivalent.

To date, no industrial engineer has come up with a blueprint to replace the strength of a wooden barrel. In tests involving high stacking, they can perform better than steel drums.

BIBLIOGRAPHY

F. J. Sweeney, "Barrels" in *The Wiley Encyclopedia of Packaging Technology*, 1st edition, John Wiley & Sons, New York, 1986, pp. 47–48.

Cited Publications

1. *Code of Federal Regulations*, Title 49, Sect. 178.155–178.161.
2. F. A. Paine, *The Packaging Media*, Blackie, Glasgow and London; John Wiley & Sons, New York, 1977.
3. H. M. Broderick, *Beer Packaging*, Master Brewers Association of the Americas, Madison, WI, 1982.

BARRIER AND OVERPRINT COATINGS

Michael W. Leonard
Sun Chemical—Functional
Coating Research, Kent, United
Kingdom

INTRODUCTION

Barrier coatings provide barriers to certain gases, liquids, radiation, or other substances. These may include oxygen, water vapor, aroma, light (including ultraviolet), and, in the case of food packaging applications, products such as oils and fats, and so on. The barrier is usually intended to prevent both penetration and loss from the package, which could otherwise cause advanced spoilage of the packaged product. There is an ongoing industry requirement to improve barrier properties in order to extend shelf life of packaged foods. This section deals only with barrier coatings, applied to flexible plastic packaging films, for the purpose of minimizing oxygen and water vapor transmission. In describing the various coating technologies, comparisons will be drawn with alternative methods of achieving these barriers, in order to provide a balanced view of this important property in relation to food packaging.

The ultimate packaging barriers to oxygen and moisture barrier are tin and glass closely followed by aluminum foils. These materials provide zero gas and vapor transmission and, in the case of glass, also visibility of the product, which is often an important point of sale marketing consideration. While these materials have served the food packaging industry very well for many years and are likely to continue doing so, they have certain drawbacks which leave the door open for new advances in barrier technologies. Glass and tin, while infinitely recyclable, are heavy and therefore expensive to transport, resulting in less environmentally friendly greenhouse gas (CO_2) emission compared to transportation of lightweight plastic packaging. Plastic packaging laminates including aluminum foils, while lighter than tin and glass, render the packaging difficult (if not impossible) to recycle, resulting in the need to dispose of it in landfill or by incineration, both of which are negative options in a world where sustainability is of increasing importance.

The gradual replacement of tin, glass, and more recently aluminum foils by plastic packaging materials has been evolving for several decades. The improvements to polymer film technologies, coupled with inorganic and organic surface treatments and coatings, continue to close the gap with tin and glass in terms of barrier performance, while ensuring that due attention is paid to the environmental impact.

BACKGROUND

There are limited choices for the packaging technologist who seeks the ultimate gas barrier in single or even multilayer plastic package structures. This becomes even more limited when there is a requirement for product visibility, reducing the options to structures that are aluminum foil or (Al) metallized film free. The common polymeric packaging films based upon polyethylene terephthalate (PET), oriented polypropylene (OPP), cellulose in many coated guises (e.g., MXXT/W, MS, etc.), and biaxially oriented nylon (BON/OPA) do not have sufficient oxygen or moisture vapor barrier properties for the many food packaging specifications that call for longer shelf life of foods that spoil if exposed to atmospheres depleted or rich in these gases. It is usual in many packaging situations to replace the atmosphere inside a package with an inert gas substitute. This is known as modified atmosphere packaging (MAP) or sometimes protective atmosphere packaging (PAP). Clearly, it is important that the substitute gas is retained for as long as possible. Typical MAP gases include nitrogen, oxygen, and carbon dioxide which as a rule of thumb permeate through polymeric films in the ratio 1:4:10. Since oxygen is the most reactive of these three, with respect to food degradation, it is seen as the most important, while combinations of nitrogen and carbon dioxide may be selected for reasons of control of microbial growth, ripening, or cost.

Permeability Data of Several Packaging Films

	Nitrogen	Oxygen	Carbon Dioxide	Ratio
Low-Density PE	0.7	2.2	9.5	1:3.1:13.5
PET	0.0108	0.0444	0.227	1:4:21
BON	0.00713	0.0285	0.066	1:4:9

The manufacturers of such polymeric films have over the past 60 years developed coatings for their products which, to varying degrees, improve the gas barrier properties as well as other specific performance properties such as heat-seal threshold, product resistance, gloss, and clarity. Such coatings include organic solvent and aqueous applied polyvinylidene chloride (PVdC), aqueous or extrusion-coated ethylene vinyl alcohol (EVOH), inorganic and organic sol–gels, and in a few instances aqueous polyvinyl alcohol (PVOH). Each of these technologies has certain compromises in performance. Certain polymeric films have an intrinsic barrier to moisture or oxygen, but rarely both. Cellulose, being a reasonable barrier to oxygen but poor moisture barrier, is one example.

Alternatives to aqueous or solvent-based coating applications have been available for some time now. These essentially inorganic layers are deposited either as vapor in a vacuum or by various electron-sputtering or plasma-enhanced chemical vapor deposition (PECVD) processes. The most common vacuum-deposited barrier coating is aluminum, but more recent developments include silicon oxide (SiOx) and aluminum oxide (AlOx) where the proportion of oxygen is nonstoichiometric. These coatings have one distinct advantage of being excellent barriers to both oxygen and water vapor. The oxide coatings are also completely transparent and most commonly used on PET and BON. Although improvements to the gas barrier of OPP are also achieved, this is less common due to the expensive nature of the process resulting in mediocre barrier performance. Since the important substrates are not heat-sealable, they are invariably used in multilayer structures, which also serve to protect the oxide coatings which are particularly susceptible to damage through physical abuse, which may result in a loss of barrier properties. Some oxide-coated films are also in-line coated, with sol–gel technologies, to enhance both barrier and abuse resistance properties. Post application of protective coatings is rare due to the risk of damage to the barrier before coating.

Very recently, there has been a resurgence in the interest shown by converters to apply barrier coatings in-line with the printing process for high-barrier packaging laminates. New organic polymer technologies combined with nano-particulate materials applied from aqueous or solvent-based systems that may not require extended drying conditions are at an early stage of commercialization and demonstrating certain advantages over existing technologies.

BARRIER COATING TECHNOLOGIES

The gas permeation process for any packaging film or coating is specific to the chemical structure and morphology of that material (1). The transmission of gases across a barrier usually involves several processes. After colliding with the barrier surface, the gas molecule must be adsorbed and subsequently dissolved in the voids of the barrier polymer matrix. Diffusion of the gas molecules then takes over and is governed by the kinetic energy of the molecules directly influenced by temperature. Diffusion of the gas generally proceeds through a barrier layer from a more to a less concentrated atmosphere or partial pressure. In all cases, permeation is controlled by the solution and diffusion steps, according to Henry's Law of Solubility and Fick's Law of Diffusion, respectively. This is why metals and the previously mentioned metal oxides exhibit such high barrier properties in exceptionally thin films, to both moisture and oxygen. Crystallinity in organic polymer barriers plays a less important role, although in coatings based upon PVdC copolymers, where the drying temperature is critical to imparting crystallinity, variation in oxygen and water vapor transmission has been reported previously by the author (2). An in-depth consideration of the theories governing gas transmission are dealt with elsewhere in this publication.

PVDC CO POLYMER COATINGS

PVdC was developed by Ralph Wiley and co-workers at the Dow Chemical Company during the period 1932–1939 (3). It was initially commercialized under the trade name of "Saran" in 1939. PVdC is still used today by both packaging film manufacturers and converters. Although it can be applied from solution, it is far more popular to use the aqueous dispersion form which enables much higher solids application at the required viscosities. One reason for the longevity of this technology is its undoubtedly unique properties that distinguish it from all other polymer dispersions, even today. It is fair to say that PVdC coatings are still the only organic polymers capable of providing both moisture and oxygen barrier. The fact that they also provide heat-sealability, high gloss, transparency, and flexibility are further reasons for its continued use. However, its use has gradually declined in various regions of the world as increased importance is placed on environmental factors. Chlorinated polymers are now excluded in many packaging structures due to the problems related to incineration and the difficulties associated with handling the toxic by products including dioxin. Furthermore, as higher barrier requirements have been introduced, partly driven by the need for longer shelf life, the need for alternative polymer technologies and inorganic barrier solutions has resulted in superior barrier technologies, albeit with their own set of compromises.

POLY VINYL ALCOHOL AND ETHYLENE VINYL ALCOHOL-BASED COATINGS

Ethylene vinyl alcohol (EVOH) copolymers are hydrolyzed copolymers of ethylene and vinyl alcohol. Polyvinyl alcohol (PVOH), made by the hydrolysis of polyvinyl acetate (PVAc), provides increasing oxygen barrier with the percentage conversion of PVAc, but this is accompanied by increasing water sensitivity. Consequently, the oxygen barrier of PVOH, while superior to polymers such as PVdC at low relative humidity, is drastically compromised under most ambient conditions that packaging must resist. Occasionally, PVOH coatings are used where the coating is protected by an efficient moisture vapor barrier such as that conferred by polyethylene or polypropylene films in multi-ply laminates. However, it is not suited, even in these structures, for high oxygen barrier specifications where relative humidity is above 50% or the processing of the packaged product involves pasteurization or autoclave steam cooking.

EVOH copolymers became commercially available in 1972 in Japan, although their use was very limited until some 10 years later. By copolymerizing vinyl alcohol with ethylene, the hydrophobic properties of the latter improve the resistance to humidity, while preserving much of the oxygen barrier. Copolymers with the highest oxygen barrier contain in the region of 27–32% ethylene and provide an environmentally acceptable alternative to PVdC under similar conditions of use. Again, the oxygen barrier properties are still sensitive to increasing levels of humidity, which limits this barrier in certain (e.g., tropical) specifications. The solubility of EVOH is troublesome; although some lower ethylene content copolymers are soluble in alcohol/water solutions, they have a tendency to gel upon storage, making them less than convenient to use. In fact, storage of the solutions at elevated temperatures is the only way to avoid gelation. Therefore, the use of EVOH in barrier packaging tends to be more commonly achieved by extrusion coating which is an expensive converting exercise.

INORGANIC COATINGS

Aluminum-metallized substrates such as PET, OPP, and cellulose are manufactured by the vacuum metallization process. These films have been available for around 30 years and provide high levels of barrier to oxygen and moisture vapor and have undergone an evolutionary process that has seen improvements to surface stability, film adhesion, and printing ink adhesion. The presence of aluminum (foil or metallized film) in food packaging is gradually being discriminated as environmentally unacceptable and will ultimately decline. The use of other vacuum metal oxide deposition processes such as plasma-enhanced chemical vapor deposition (PECVD) to lay down ultrathin layers of aluminium oxide or silicon oxide is also well-advanced, producing transparent films with equivalent barrier to the more common aluminum metallization or in some cases even better. The major disadvantage with these ceramic-type layers is their brittleness, which makes them prone to damage either during the converting process or in the final laminate structure during the packaging operation.

NEW BARRIER COATINGS TECHNOLOGY

Over the last five years, there has been considerable worldwide investment in nanotechnology. Some of this investment has been focused on the development of new barrier coating technology. In an effort to take cost out of the process whilst achieving the highest possible barrier properties combined with sustainability (low carbon footprint, compostability or recyclability) coatings applied via the conventional coating processes (gravure, reverse roll, flexo, blade coat, etc) from water or organic solvent are ready for commercialization. These coatings exhibit a balance of properties which makes them suitable for both film manufacturer and converter applied applications. Their performance in packaging will now be discussed with reference to the graphs referenced.

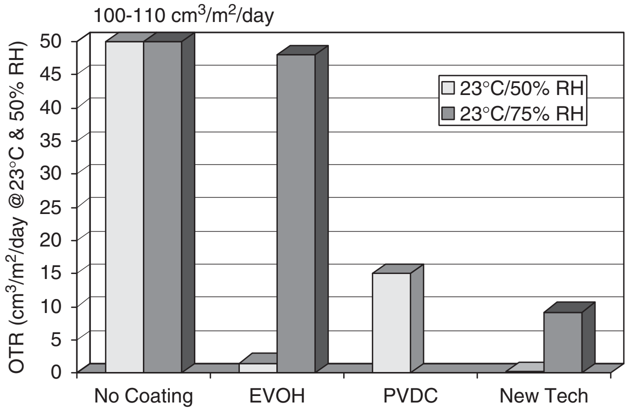

Figure 1. Comparison of new-generation oxygen barrier coating on PET with other barrier polymers.

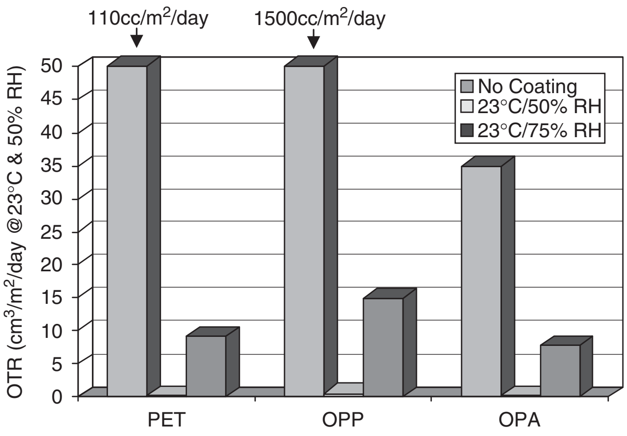

Figure 3. Comparison of new generation oxygen barrier coatings on common flexible packaging substrates.

Oxygen Barrier (see Figure 1). Compared to other well-known organic barrier polymers, this new generation of barrier coatings offers a superior oxygen barrier that is less susceptible to high levels of relative humidity. Compared to inorganic barriers the oxygen barrier is very similar, but inorganics still offer slightly better stability to high relative humidity. Owing to the combination of inert particle technologies and "green" polymer selection, the new-generation coatings are generally more sustainable and provide better abuse resistance as is demonstrated in Figure 2. Indeed the latest coating technology can be used to reinforce the performance of aluminium-metallized and oxide-coated films, achieving barriers of less than 0.1 cm^3/m^2/day as well as improving the flex resistance of these substrates. In Figure 3 it can be seen that significant improvements to the oxygen barrier of common packaging substrates is possible without the need for complex application/vapor deposition processes, opening up the potential for conversion of high barrier packaging at various points along the value chain (e.g., film manufacturer or converter). In many respects these coatings may be seen as a means to produce cheaper laminate high-barrier structures (e.g., using barrier-coated OPP) with equivalent barriers to those currently used (e.g., PET).

Compostable and sustainable substrates such as those derived from cellulose or poly lactic acid (PLA) are being

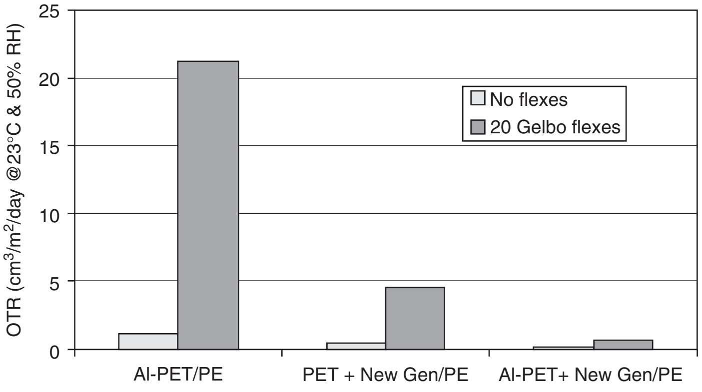

Figure 2. Oxygen transmission versus flex resistance (in Gelbo flexes)-new-generation barrier coatings in laminate structures.

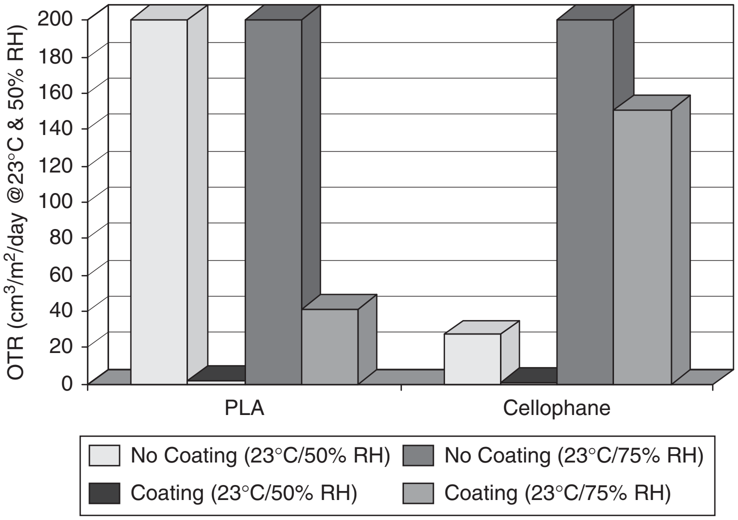

Figure 4. Indication of oxygen barrier improvements with new-generation technology on sustainable substrates.

specified more and more by the large retail outlets. These substrates do not have the appropriate barrier properties required for many perishable food types. Improvements through inorganic and new-generation-type coatings are presently a high priority. In Figure 4 the improvement to oxygen barrier on PLA is very significant. Cellulose, however, which has even higher sensitivity to moisture, shows less improvement.

Moisture Vapor Barrier. Combining oxygen and moisture vapor barrier in organic polymer-based coatings remains a target. Although nano particulate materials are capable of improving both barrier properties it is still necessary to apply separate coatings to achieve the highest barriers. In Figure 5, improvements to moisture vapor barrier on PET, PLA, and paper are compared with a commercial barrier board. With this type of coating technology, it is possible to confer moisture vapor barrier performance on substrates such as polylactic acid (PLA) and cellophane approaching that of polyethylene or OPP.

Present technologies include both water- and solvent-based products permitting applications from gravure, flexographic, and lithographic (tower) coaters.

NEAR FUTURE DEVELOPMENTS

The new-generation barrier coating technologies are set to evolve rapidly in-line with the requirement for a single coating combining both oxygen and moisture barriers, sustainability and high abuse resistance at low applied film weights. Heat-sealability and surface print

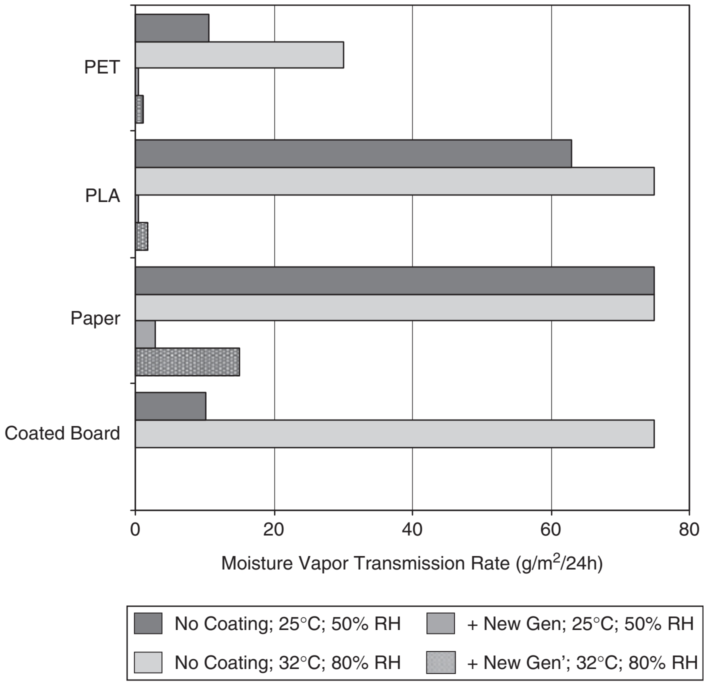

Figure 5. New-generation barrier coatings: moisture vapor transmission on sustainable substrates.

performance will follow. The use of barrier coatings, especially oxygen barrier types, will also allow consideration for simplifying or lightweighting complex laminates, resulting in waste reduction and a lower carbon footprint than is currently the case (4). Furthermore, these highly transparent and flexible coatings will allow new packaging design innovations where product visibility is an advantage. Combining these gas barrier coating technologies with UV light-curing barrier coatings will result in clear plastic packaging with the potential to supplant glass, cans, and conventional laminates in a wider variety of packaged produce.

BIBLIOGRAPHY

1. D. Zagory, in *Encyclopedia of Packaging Technology*, 2nd edition, John Wiley & Sons, New York, 1997.
2. M. W. Leonard, "A Study of the Effects of Increasing Crystallinity in PVdC Coated Polypropylene (Prop c) and Cellulose (MxxT/s)," *J. Oil Colour Chem. Assoc.* **62**(12), 461–469 (1979).
3. D. C. Thompson and A. L. Barney, "Vinylidene Polymers" in *Encyclopedia of Chemical Technology*, 2nd edition, Vol. 21, Interscience, New York, 1970.
4. D. R. Illsley, private communication.

BARRIER POLYMERS

Bradley Finnigan
Precision Fabrics Group,
Newport News, Virginia

Modern synthetic polymers have been used for over 50 years as barriers to mass transport of liquids and gases. Major applications of barrier polymers include food and pharmaceutical packaging. The growth in polymer-based packaging materials at the expense of metal and glass containers has seen the importance of barrier polymers continue to rise. Polymeric packaging offers the advantages of weight reduction, formability into useful and attractive shapes, reduced breakage, transparency, and cost savings. Recently, emphases on longer-term storage and convenience factors such as microwavability have become important. Research remains strong in industry and academia to offer improved polymer properties and fabrication methods and to address environmental issues including recyclability, source reduction, sustainability, and degradability.

Traditionally, the definition of a barrier polymer has been strongly attached to the oxygen permeability. Barrier polymers had oxygen permeabilities less than about 2.0 nmol/m · s · GPa (= 1.0 cc(stp) · mil/100 in.^{2} · day · atm). (See Table 1 for unit conversions.) This definition unnecessarily limits the range of barrier polymers. Some polymers with higher oxygen permeabilities are useful barriers for other molecules.

THE PERMEATION PROCESS

A basic understanding of the permeation process can help clarify the barrier characteristics of polymers. A permeant molecule moves through a barrier in a multistep process. First, the molecule collides with the polymer surface. Then, it must adsorb and dissolve into the polymer mass. In the polymer, the permeant "hops" or diffuses randomly as its own thermal kinetic energy keeps it moving from vacancy to vacancy as the polymer chains move. The random diffusion yields a net movement from the side of the barrier polymer that is in contact with a high concentration or partial pressure of permeant to the side that is in contact with a low concentration of permeant. After crossing the barrier polymer, the permeant moves to the polymer surface, desorbs, and moves away.

In virtually every case, the permeation is controlled by the solution and diffusion steps. The diffusion coefficient, D, is a measure of the speed of molecules moving in the polymer. The solubility coefficient, S, is an indication of the number of permeant molecules that are diffusing. Together, the diffusion coefficient and the solubility coefficient describe the permeability coefficient, commonly called the permeability, P.

$$P = D \times S \tag{1}$$

A low permeability may result from a low diffusion coefficient or a low solubility coefficient or both.

Table 1. Permeability Units[a] with Conversion Factors

Multiply → to obtain ↓	$\frac{\text{nmol}}{\text{m}\cdot\text{s}\cdot\text{GPA}}$	$\frac{\text{cc}\cdot\text{mil}}{100\,\text{in.}^2\cdot\text{d}\cdot\text{atm}}$	$\frac{\text{cc}\cdot\text{mil}}{\text{m}^2\cdot\text{d}\cdot\text{atm}}$	$\frac{\text{cc}\cdot\text{cm}}{\text{cm}^2\cdot\text{s}\cdot\text{atm}}$	$\frac{\text{cc}\cdot\text{cm}}{\text{cm}^2\cdot\text{s}\cdot\text{cm Hg}}$	$\frac{\text{cc}\cdot 20\,\mu m}{\text{m}^2\cdot\text{d}\cdot\text{atm}}$
$\frac{\text{nmol}}{\text{m}\cdot\text{s}\cdot\text{GPa}}$	1	2	0.129	4.390×10^{10}	3.336×10^{12}	0.1016
$\frac{\text{cc}\cdot\text{mil}}{100\,\text{in.}^2\cdot\text{d}\cdot\text{atm}}$	0.50	1	6.452×10^{-2}	2.195×10^{10}	1.668×10^{12}	5.08×10^{-2}
$\frac{\text{cc}\cdot\text{mil}}{\text{m}^2\cdot\text{d}\cdot\text{atm}}$	7.75	15.50	1	3.402×10^{11}	2.585×10^{13}	0.787
$\frac{\text{cc}\cdot\text{cm}}{\text{cm}^2\cdot\text{s}\cdot\text{atm}}$	2.278×10^{-11}	4.557×10^{-11}	2.939×10^{-12}	1	76.00	2.315×10^{-12}
$\frac{\text{cc}\cdot\text{cm}}{\text{cm}^2\cdot\text{s}\cdot\text{cm Hg}}$	2.998×10^{-13}	5.996×10^{-13}	3.860×10^{-14}	1.316×10^{-2}	1	3.046×10^{-14}
$\frac{\text{cc}\cdot 20\,\mu\text{m}}{\text{m}^2\cdot\text{d}\cdot\text{atm}}$	9.84	19.68	1.27	4.32×10^{11}	3.283×10^{13}	1

[a] Throughout the *Encyclopedia*, cm^3 (or mL) is used in preference to cc. However, the advantage of using cc here is an obvious visual aid in the complex units and there are further comments regarding cc versus cm^3 in the text.

The permeability for a given polymer–permeant combination can be used to describe the steady-state transport. Equation (2) is Fick's First Law adapted for packaging:

$$\frac{\Delta M_x}{\Delta t} = \frac{PA\Delta p_x}{L} \tag{2}$$

where $\Delta M_x/\Delta t$ is the steady-state rate of permeation of permeant x through a polymer film with area A and thickness L. P is the permeability, and Δp_x is the difference in pressure of the permeant on the two sides of the film.

Equation (2) shows why reliable tables of permeabilities are important. The packaging engineer has no control over the Δp_x since the conditions of the environment and the contents are fixed. Mechanical, economic, and containment requirements limit the allowable ranges of area and thickness. Only P has a wide range of possibilities.

One caveat must be considered before applying equation (2). The permeation must be at steady state. With small molecules such as oxygen, steady state is usually attained in a few hours or less, depending the polymer and the thickness. However, with larger molecules in barrier polymers, especially glassy polymers, the time to reach steady state can be very long, possibly exceeding the anticipated storage time. The time to reach steady state, t_{ss}, can be estimated with equation (3):

$$t_{ss} \cong L^2/4D \tag{3}$$

Equation (2) should only be used when t_{ss} is small compared to the storage time.

Water-vapor transmission is treated differently. The industry has arrived at a standard condition for reporting and comparing performance, 37.8°C (100°F) and 90% rh difference. Equation (4) shows how the rate of water-vapor transmission can be calculated using the value of the water-vapor transmission rate (WVTR) and the package geometry:

$$\frac{\Delta M_{\mathrm{H_2O}}}{\Delta t} = \frac{WVTR \cdot A}{L} \tag{4}$$

When the actual conditions differ from the standard, the WVTR can be adjusted with great care. Ideally, data have been reported at the actual conditions; otherwise, adjustments for both the relative humidity difference and temperature must be made. If the polymer is known to be insensitive to humidity, such as a polyolefin, the humidity adjustment is merely multiplication by the actual relative humidity difference on the two sides of the film divided by 90% rh. The temperature effect will be discussed later.

UNITS

The units for permeability are complex, and many correct combinations are used in the literature. Lamentably, many incorrect combinations are used too. Table 1 contains conversion factors for several common units for the permeability. Table 2 contains conversion factors for several common units for WVTR. In these units the quantity of permeant is a molar unit, typically a cc(stp). For the permeability of flavors and aromas, a unit using the mass of the permeant is useful. A modified unit, the MZU ($=10^{-20}\,\mathrm{kg\cdot m/m^2\cdot s\cdot Pa}$), can be converted to a molar unit according to equation (5), where MW is the molecular weight of the permeant in daltons (g/mol).

$$P\,\mathrm{in\,MZU} \times (10/\mathrm{MW}) = P\,\mathrm{in\,nmol/m\cdot s\cdot Gpa} \tag{5}$$

Table 2. Water Vapor Transmission Rate Units with Conversion Factors

Multiply → to obtain ↓	$\frac{\mathrm{nmol}}{\mathrm{m\cdot s}}$	$\frac{\mathrm{g\cdot mil}}{100\,\mathrm{in.}^2\cdot\mathrm{d}}$	$\frac{\mathrm{g\cdot cm}}{\mathrm{m^2\cdot d}}$
$\frac{\mathrm{nmol}}{\mathrm{m\cdot s}}$	1	0.253	6.43
$\frac{\mathrm{g\cdot mil}}{100\,\mathrm{in.}^2\cdot\mathrm{d}}$	3.95	1	25.40
$\frac{\mathrm{g\cdot cm}}{\mathrm{m^2\cdot d}}$	0.155	3.94×10^{-2}	1

PERMEABILITY DATA

Table 3 contains oxygen, nitrogen, and carbon dioxide permeability data for several polymers at 20°C and 75% rh. Generally, the permeabilities of N_2, O_2, and CO_2 are in the ratio 1:4:14. The polymers are ranked roughly in order of increasing permeability. This list contains polymers that meet the traditional criterion for barrier polymers and several that do not. The range of permeabilities here is more than four orders of magnitude. Table 4 contains diffusion coefficients and solubility coefficients for oxygen and carbon dioxide in many of the same polymers. Note that these values are useful for comparison with the flavor, aroma, and solvent permeation that is presented later in the chapter.

Barrier polymers are typically used as discrete layers, as coatings, or in blends. Depending on the packaging application, oxygen barrier polymers are frequently selected from the group consisting of ethylene–vinyl alcohol copolymers, polyvinyl alcohol, polyvinylidene chloride, polyacrylonitrile, polyesters, and various types of polyamides. Moisture barrier polymers include polyethylene (particularly high density polyethylene), polypropylene, polyvinylidene chloride, cyclic olefin copolymers, and polychlorotrifluoroethylene. OTR and WVTR data for selected polymers is shown in Table 5. A comprehensive list of permeability properties of polymers can be found in reference 4.

The increased demand for transparent packaging has seen a number of organic, inorganic and ceramic barrier coatings introduced as alternatives to metallized coatings and aluminum foil (3). Examples of commercially available barrier coating materials include polyacrylic acid, polyvinylidene chloride, polyvinyl alcohol, nitrocellulose, epoxy-amine and polyamino ether coatings, and nanocomposites thereof. In addition to high-barrier, transparency, and cost-savings drivers, retort and microwave packaging requirements contributed to the introduction of thin silicon oxide (SiO_x) and aluminum oxide (AlO_x) coatings. These coatings are typically applied to bottles and oriented polyester films via vapor deposition processes.

Table 3. Permeabilities of Selected Polymers[a]

	Gas Permeability (nmol/m · s · GPA)		
Polymer	Oxygen	Nitrogen	Carbon Dioxide
Vinylidene chloride copolymers	0.02–0.30	0.005–0.07	0.1–1.5
Ethylene–vinyl alcohol copolymers, dry	0.014–0.095		
at 100% rh	2.2–1.1		
Nylon-MXD6[b]	0.30		
Nitrile barrier polymers	1.8–2.0		6–8
Nylon-6	4–6		20–24
Amorphous nylon (Selar[c] PA 3426)	5–6		
Polyethylene terephthalate	6–8	1.4–1.9	30–50
Polyvinyl chloride	10–40		40–100
High-density polyethylene	200–400	80–120	1200–1400
Polypropylene	300–500	60–100	1000–1400
Low density polyethylene	500–700	200–400	2000–4000
Polystyrene	500–800	80–120	1400–3000

[a] Reference 1; see Table 1 for unit conversion.
[b] Trademark of Mitsubishi Gas Chemical Co.
[c] Trademark of E. I. du Pont de Nemours & Co., Inc.

While SiO_x and AlO_x coatings are not polymeric, they offer an excellent combination of oxygen and moisture barrier properties to polymer-based packaging.

Multilayer barrier structures are commonly used for both flexible and rigid applications. These structures can be the result of coextrusion, lamination, or coating. Typically, one of the layers provides most of the barrier while other layers provide inexpensive mechanical integrity, printability, opacity, sealability, formability, adhesion, or merely a place to locate reground scrap. The total barrier performance of a multilayer structure can be estimated with equation (6):

$$\frac{L_t}{P_t} = \frac{L_1}{P_1} + \frac{L_2}{P_2} + \frac{L_3}{P_3} + \cdots \tag{6}$$

where L_1, L_2, and L_3 are the thicknesses of layers and P_1, P_2, and P_3 are the respective permeabilities of the layers. L_t is the total thickness, and $\mathrm{P_t}$ is the effective permeability of the multilayer structure. The quantity L_t/P_t is the “permeance.” L_t and P_t may be used in equation (2) to calculate the expected performance. An example of a seven-layer barrier film is shown in Figure 1.

NANOCOMPOSITE APPROACH TO BARRIER PERFORMANCE

Polymer nanocomposites containing nanometer-sized layered silicates (1 nm thick, 100- 500-nm-diameter platelets) have been the focus of considerable research interest in recent years (5). This is because significant improvements in mechanical, thermal, and barrier properties have been reported, particularly in nylon systems.

Improved barrier performance in nanocomposites can result from the high-aspect-ratio platelets providing a tortuous path for the permeant to travel through, or by the filler inclusions altering the diffusivity of the host matrix—for example, by decreasing the free volume of the polymer—or by changing the polymer crystal type/orientation. Improvements in barrier performance upon filler addition do not always occur.

A number of companies currently manufacture polyolefin and nylon nanocomposites for packaging applications. However, the use of these materials for barrier packaging has been limited to niche applications. At present, research is ongoing to overcome the challenges that are preventing widespread commercialization. These

Table 4. Diffusion and Solubility Coefficients for Oxygen and Carbon Dioxide in Selected Polymers at 23°C, Dry[a]

	Oxygen		Carbon Dioxide	
Polymer	D, m^2/s	S, nmol/(m^3 · GPa)[b]	D, m^2/s	S, nmol/(m^3 · GPa)[b]
Vinylidene chloride copolymer	1.2×10^{-14}	1.01×10^{13}	1.3×10^{-14}	3.2×10^{13}
Ethylene–vinyl alcohol copolymer[c]	7.2×10^{-14}	2.4×10^{12}		
Acrylonitrile barrier polymer	1.0×10^{-13}	1.0×10^{13}	9.0×10^{-14}	4.4×10^{13}
Polyethylene terephthalate	2.7×10^{-13}	2.8×10^{13}	6.2×10^{-14}	8.1×10^{14}
Polyvinyl chloride	1.2×10^{-12}	1.2×10^{13}	8.0×10^{-13}	9.7×10^{13}
Polypropylene	2.9×10^{-12}	1.1×10^{14}	3.2×10^{-12}	3.4×10^{14}
High-density polyethylene	1.6×10^{-11}	7.2×10^{12}	1.1×10^{-11}	4.3×10^{13}
Low-density polyethylene	4.5×10^{-11}	2.0×10^{13}	3.2×10^{-11}	1.2×10^{14}

[a] Reference 1.
[b] For unit conversion, see equation (5).
[c] 42 mol% ethylene.

Table 5. Oxygen and Water-Vapor Transmission Rates of Selected Polymers

Polymer	OTR, nmol/(m · s)[a]	WVTR, nmol/(m · s)[b]
Polychlorotrifluoroethylene	36[c]	0.004–0.009[d]
AlOx (Toppan GX-P)[e]	0.04	0.006
Vinylidene chloride copolymers	0.02–0.30	0.005–0.05
High-density polyethylene (HDPE)	200–400	0.095
Cyclic olefin copolymers	360	0.02[f]
Polypropylene	300–500	0.16
Amorphous nylon (EMS G21)	7.7	0.23[f]
Low-density polyethylene (LDPE)	500–700	0.35
Ethylene–vinyl alcohol, 44 mol% ethylene	0.12	0.36[g]
Polyethylene terephthalate (PET)	6–8	0.45
Polyvinyl chloride (PVC)	10–40	0.55
Ethylene–vinyl alcohol, 32 mol% ethylene	0.03	0.96[g]
Nylon-6,6	7	0.95
Polyamino ether (ICI's OxyBLOC)	0.2–1.6	1
Nitrile barrier resins	1.8–2.0	1.5
Polystyrene	500–800	1.8
Nylon-6	4–6	2.7
Polycarbonate	520	2.5
Nylon-12		15.9
Polyacrylic acid (Kureha's Besela)	0.03[h]	
Polyvinyl alcohol	0.12[i]	

[a] At 23°C and 0% rh unless otherwise noted.
[b] At 38°C and 90% rh unless otherwise noted.
[c] Measured at 25°C. Reference (4).
[d] Measured at 38°C and 100% rh. Reference (4).
[e] Aluminium oxide coated 48ga polyester film. Units cm^3 or gm/(100 in^2 · day · atm).
[f] Measured at 23°C and 85% rh. Reference (4).
[g] Measured at 40°C and 90% rh. Reference (4).
[h] PAA-coated 48ga polyester film. Units cm^3/(100 in^2 · day · atm). Measured at 23°C and 80% rh after retort.
[i] Measured at 24°C. Reference (4).

challenges include processing methods and inexpensive surface modifications to ensure excellent particle dispersion and particle alignment, which are required in order to optimize property performance and reproducibility.

FLAVOR/AROMA/SOLVENT BARRIER

In addition to functioning as gas and moisture barriers, polymers are also utilized in packaging applications that require flavor, aroma, or solvent barriers. Table 6 contains data for the transmission of flavor, aroma, and solvent (F/A/S) molecules in a few polymers. These data are for 25°C at 0% rh and very low activity (or partial pressure) of the permeant. This list represents only a small fraction of the virtually limitless combinations of F/A/S compounds and polymer films. Reliable data at low activities, as typically encountered in foods, are difficult to find. However, the data in Table 6 are consistent with some general rules. First, polyolefins are not good barriers for F/A/S compounds. Second, vinylidene chloride copolymers and ethylene–vinyl alcohol copolymers are good barriers. A third rule is not apparent from Table 6. A polymer below its glass-transition temperature (T_g)—that is, glassy polymer—is an excellent barrier for F/A/S compounds. Data are extremely rare; hence, only a few data are given for an ethylene–vinyl alcohol copolymer. The problem is that the diffusion coefficients are so low that the experiments take too long to do with accuracy. The previous author and associates were unsuccessful in many attempts to test polystyrene, PET, and nylons.

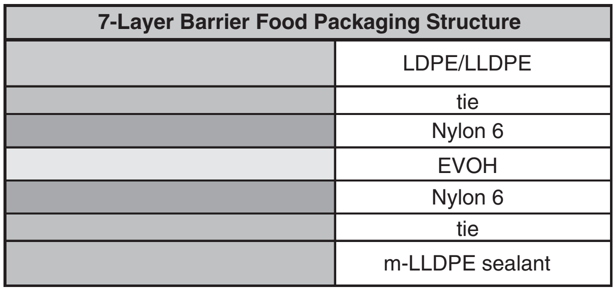

Figure 1. Seven-layer barrier film used in food packaging.

In these tables of data, different polymers occupy the top barrier positions. For oxygen, vinylidene chloride copolymers and ethylene–vinyl alcohol copolymers are the best barriers. For water vapor, vinylidene chloride copolymers and the polyolefins are the best barriers. For F/A/S compounds, vinylidene chloride copolymers remain good. Some glassy polymers that are not given are the best barriers. Yet of all these polymers, only a few meet the traditional definition of a barrier polymer.

FACTORS AFFECTING PERMEABILITY

The permeability increases with increasing temperature for all known cases. A plot of logarithm P versus $1/T$ in

Table 6. Examples of Permeation of Flavor and Aroma Compounds in Selected Polymers at 25°C,[a] Dry[b]

Flavor/Aroma Compound	Permeant Formula	P, MZU[c]	D, m^2/s	S, $kg/(m^3 \cdot Pa)$
Vinylidene Chloride Copolymer				
Ethyl hexanoate	$C_8H_{16}O_2$	570	8.0×10^{-18}	0.71
Ethyl 2-methylbutyrate	$C_7H_{14}O_2$	3.2	1.9×10^{-17}	1.7×10^{-3}
Hexanol	$C_6H_{14}O$	40	5.2×10^{-17}	7.7×10^{-3}
trans-2-Hexenal	$C_6H_{10}O$	240	1.8×10^{-17}	0.14
d-Limonene	$C_{16}H_{16}O$	32	3.3×10^{-17}	9.7×10^{-3}
3-Octanone	$C_8H_{16}O$	52	1.3×10^{-18}	0.40
Propyl butyrate	$C_7H_{14}O_2$	42	4.4×10^{-18}	9.4×10^{-2}
Dipropyl disulfide	$C_6H_{14}S_2$	270	2.6×10^{-18}	1.0
Ethylene–Vinyl Alcohol Copolymer				
Ethyl hexanoate		0.41	3.2×10^{-18}	1.3×10^{-3}
Ethyl 2-methylbutyrate		0.30	6.7×10^{-18}	4.7×10^{-4}
Hexanol		1.2	2.6×10^{-17}	4.6×10^{-4}
trans-2-Hexenal		110	6.4×10^{-17}	1.8×10^{-2}
d-Limonene		0.5	1.1×10^{-17}	4.5×10^{-4}
3-Octanone		0.2	1.0×10^{-18}	2.0×10^{-3}
Propyl butyrate		1.2	2.7×10^{-17}	4.5×10^{-4}
Low-Density Polyethylene				
Ethyl hexanoate		4.1×10^{6}	5.2×10^{-13}	7.8×10^{-2}
Ethyl 2-methylbutyrate		4.9×10^{5}	2.4×10^{-13}	2.3×10^{-2}
Hexanol		9.7×10^{5}	4.6×10^{-13}	2.3×10^{-2}
trans-2-Hexenal		8.1×10^{5}		
d-Limonene		4.3×10^{6}		
3-Octanone		6.8×10^{6}	5.6×10^{-13}	1.2×10^{-1}
Propyl butyrate		1.5×10^{6}	5.0×10^{-13}	3.0×10^{-2}
Dipropyl disulfide		6.8×10^{6}	7.3×10^{-14}	9.3×10^{-1}
High-Density Polyethylene				
d-Limonene		3.5×10^{6}	1.7×10^{-13}	2.5×10^{-1}
Menthone	$C_{10}H_{18}O$	5.2×10^{6}	9.1×10^{-13}	4.7×10^{-1}
Methyl salicylate	$C_8H_8O_3$	1.1×10^{7}	8.7×10^{-14}	1.6
Polypropylene				
2-Butanone	C_4H_8O	8.5×10^{3}	2.1×10^{-15}	4.0×10^{-2}
Ethyl butyrate	$C_6H_{12}O_2$	9.5×10^{3}	1.8×10^{-15}	5.3×10^{-2}
Ethyl hexanoate		8.7×10^{4}	3.1×10^{-15}	2.8×10^{-1}
d-Limonene		1.6×10^{4}	7.4×10^{-16}	2.1×10^{-1}

[a] Values for vinylidene chloride copolymer and ethylene–vinyl alcohol are extrapolated from higher temperatures.

[b] Permeation in the vinylidene chloride copolymer and the polyolefins is not affected by humidity; the permeability and diffusion coefficient in the ethylene–vinyl alcohol copolymer can be as much as 1000 times greater with high humidity (1).

[c] MZU = $(10^{-20}\,kg \cdot m)/m^2 \cdot s \cdot Pa)$; see equation (5) for unit conversions.

kelvin yields a straight line with a slope proportional to the activation energy for permeation. Usually the slope is steeper above T_g than below T_g. Hence, knowledge of the permeability at two temperatures allows calculation of the permeability at a third temperature, provided that T_g is not in the range. For many polymers the oxygen permeability increases about 9% per °C above T_g and about 5% per °C below T_g. The temperature sensitivity is greater for larger-permeant molecules. The temperature sensitivity for the WVTR is theoretically a little more complicated; however, it is about the same as for the oxygen permeability.

Humidity can affect the permeability of some polymers. When a polymer equilibrates with a humid environment, it absorbs water. The water concentration in the polymer might be very low as in polyolefins or it might be several weight percent as in ethylene–vinyl alcohol copolymers. Absorbed water does not affect the permeabilities of some polymers including vinylidene chloride copolymers, acrylonitrile copolymers, and polyolefins. Absorbed water increases the permeabilities in some polymers including ethylene–vinyl alcohol copolymers and most polyamides. A few polymers show a slight decrease in the oxygen permeability with increasing humidity. These include PET and amorphous nylon. Since humidity is inescapable in many packaging situations, this effect cannot be overlooked. The humidity in the environment is often above 50%rh, and the humidity inside a food package can be nearly 100% rh.

Additives are blended into polymers to improve mechanical or chemical properties such as flexibility, cling, and thermal stability. When the additive is a small molecule and it is soluble in the polymer, the polymer is likely to be plasticized. This effect increases the diffusion coefficient for permeant molecules. The solubility coefficient is unaffected. The effect can be small if the additive is included at less than about 1 wt%. However, at larger concentrations the effect can be large. The oxygen permeability of poly (vinyl chloride) increases by about 10 times when enough plasticizer is added to make the resulting film flexible. The phenomenon of antiplasticization is under investigation. The potential exists that, for some small molecule additives, the diffusion coefficient can be decreased.

If the additive is not soluble in the polymer, the result is more complicated. For an inorganic filler, the permeability might increase if the polymer does not wet the filler. The permeability will decrease if the polymer wets the filler. However, the effect is likely to be small unless the loading of filler is greater than about 20 wt%. Loadings this high are avoided since these composites are typically difficult to handle.

Filler in the form of platelets can lower the permeability more than filler with a more compact shape. If the platelets tend to lie in the plane of the film, permeant molecules must make wide detours (tortuous path) while traversing the film. This gives a greatly reduced effective diffusion coefficient.

Crystallinity is an overrated contributor to barrier in polymers. First, if a polymer has crystallinity, the level of crystallinity typically exists within a narrow range with only modest variation allowed from fabrication variables. Hence, crystallinity is not a strong design parameter. Second, the same properties that lead to crystallinity also lead to efficient packing in the amorphous phase. Efficient packing in the amorphous phase gives a low diffusion coefficient. Polyolefins are glaring exceptions because they have considerable crystallinity and high diffusion coefficients.

Orientation is frequently cited as a contributor to barrier in polymer films. If the polymer molecules truly are oriented in the plane of the film, either uniaxially or biaxially, the permeability is probably lower than that in an unoriented film. However, sometimes the word "oriented" merely means that the film has been stretched. If the polymer molecules relax during stretching, little orientation results and little effect is expected. A few cases have been noted where stretching has created microfissures in the polymer and the permeability has increased. Table 7 contains permeability data for elongated films. The results vary. A practitioner is wise to test permeability before concluding that a fabrication involving elongation will lower the permeability. When elongation does lower the permeability, the causes are a combination of better packing among parallel molecules, difficulty in moving perpendicular to the alignment of the polymer molecules, and, when crystallinity is present, the tendency for crystallites to act as platelets aligned in the plane of the film. When performed correctly, orientation is an effective means of improving barrier properties and reducing material requirements.

Table 7. Effect of Orientation on Oxygen Permeability for Certain Polymers[a]

Polymer	Degree of Orientation, %	Oxygen permeability,[b] nmol/m · s · GPa)[c]
Polypropylene	0	300
	300	160
Polystyrene	0	840
	300	600
Polyester	0	20
	500	10
Copolymer of 70% acrylonitrile and 30% styrene	0	2.0
	300	1.8

[a] Reference (2).
[b] At 23°C.
[c] See Table 1 for unit conversions.

POLYMER COMPOSITION

Although a case has been made for a situational definition for barrier polymers, common practice still focuses on a rather small set of polymers. Figure 2 contains schematic chemical structures of polymers with low permeabilities to permanent gases, especially oxygen.

Finding common traits among this diverse group is difficult. However, each has some polarity which leads to chain-to-chain interactions that give good packing in the amorphous phase. Also, frequently, sufficient symmetry exists to allow crystallinity to develop. Again, this can lead to good packing in the amorphous phase.

AVAILABILITY

Barrier polymers are available as resins for extrusion, resins for dissolution and coating, and latices for coating. Each form has its own advantages and disadvantages. Resins for extrusion can be made into monolayers or multilayers with thicknesses to give adequate barrier for demanding applications. However, extrusion can give a severe thermal stress to the polymer which could lead to degradation. For semicrystalline polymers the extrusion temperature must exceed the melting temperature. When more modest total barrier is needed, a coating may be adequate. Typically, coatings more than 3 μm (0.1 mil) are difficult to achieve. However, semicrystalline polymers can be used in solvents well below the melting temperature. Hence, polymers with marginal thermal stability may be used. Solvent recovery and management must be considered. For latices, the particles are too small to allow crystallinity to develop; hence, semicrystalline polymers remain amorphous until after coating and drying. Latices cannot be stored indefinitely and must be used before coagulation occurs.

CONCLUSION

The choice of barrier polymer(s) for any given application is determined by economics, performance requirements, and the package format. A wide variety of barrier

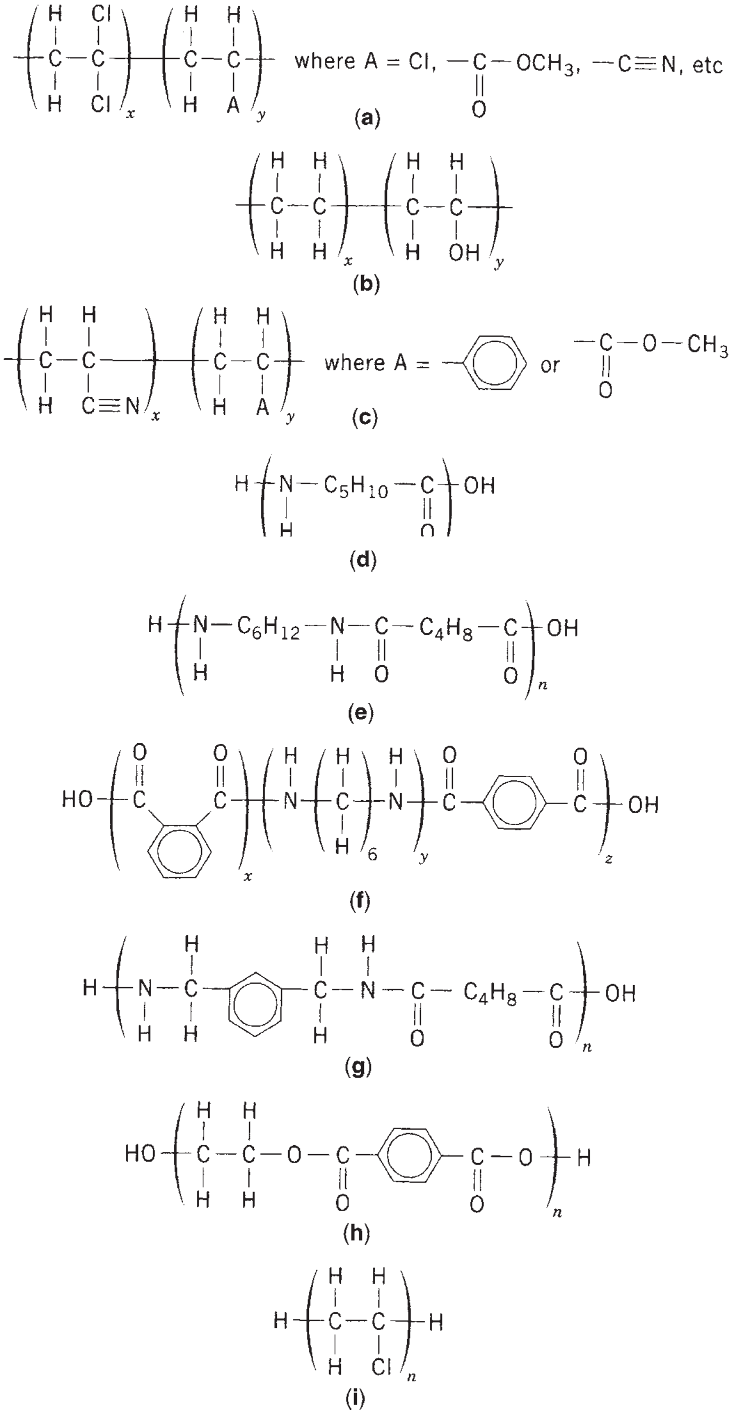

Figure 2. Chemical structures of barrier polymers. (**a**) Vinylidene chloride copolymers; (**b**) hydrolyzed ethylene–vinyl acetate (EVOH); (**c**) acrylonitrile barrier polymers; (**d**) nylon-6; (**e**) nylon-6,6; (**f**) amorphous nylon (Selar PA 3426), $y = x + z$; (**g**) nylon-MXD6; (**h**) poly(ethylene terephthalate); and (**i**) poly(vinyl chloride).

polymers are available for use, and the number of material options will continue to grow. In extreme cases, barrier requirements can be met without the use of foil by combining the correct barrier polymers, with technologies such as gas flushing and active packaging scavengers.

BIBLIOGRAPHY

1. P. T. DeLassus, "Barrier Polymers" in J. I. Kroschwitz, ed., *Kirk–Othmer Encyclopedia of Chemical Technology*, 4th edition Vol. 3, John Wiley & Sons, New York, 1992, pp. 931–962.
2. M. Salame and S. Steingiser, *Polymer-Plastics Technol. Eng.* **8**(2), 155–175 (1977).
3. J. Lange and Y.Wyser, *Packag. Technol. Sci.* **16**, 149–158 (2003).
4. L. Massey, *Permeability Properties of Plastics and Elastomers*, 2nd edition, Plastics Design Library/William Andrew Publishing, 2003.
5. M. Alexandre and P. Dubois, *Mater. Sci. and Eng.* **28**, 1–63 (2000).

BIOBASED MATERIALS

LinShu Liu
Eastern Regional Research
Center, Agricultural Research
Service, U.S. Department of
Agriculture, Wyndmoor,
Pennsylvania

Joseph Kost
Department of Chemical
Engineering, Ben-Gurion
University, Beer-Sheva, Israel

The prefix “bio-” means life in Greek. Biobased materials indicate the substances obtained from living or dead animals or plants. Biobased materials are a large group of loosely related processing (or engineering) materials, which are mainly derived from substances originally existing in nature, such as in living tissues or organisms, but may also be obtained by synthetic methods. Accordingly, biobased materials include common commodities such as leather and wood, as well as those that have undergone more extensive processing such as pectin, oleic acid and carboxymethyl cellulose. In literature, the term “biobased material” is often used synonymously with the words biomass or biomaterial. The three words differ from each other slightly in definition and mostly in habitual uses. Biomass refers to animal or plant matter grown for uses for production of chemicals and fibers, but does not include their products after processing; and more commonly, biomass is frequently used in literature of energy production, emphasizing its status in the carbon cycle as a renewable fuel. The term “biomaterial” has an additional meaning. As a result of its long use for biomedical applications, it refers to materials that can perform biological functions and are biocompatible when in contact with living tissues. The study of biobased materials is now a large sector in material science and agrobusiness, as are (a) the study of biomaterials in biomedical and pharmaceutical sciences and (b) the study of biomass in renewable energy.

Based on their sources and production, biobased materials can be divided into three major categories (1, 2):

- Category 1 includes those removed (extraction, exuding, isolation after milling, etc.) from biomass. Examples are (a) polysaccharides such as starch and cellulose and (b) proteins such as collagen and casein.
- Category 2 includes polymers produced by a chemical method using renewable biobased monomers. Examples are some polyesters such as poly(lactic acid), which is produced from the polymerization of lactic acid, a fermentation product of carbohydrate feedstock. Category 2 biobased materials also include monomers or low-molecular-weight chemicals (so-called “building blocks”) obtained from biobased feedstocks by chemical or biochemical methods, such as rosin, castor oil, and terpene.
- Category 3 includes materials produced by microorganisms or genetically modified bacteria. Examples are bacterial cellulose and polyhydroxyalkonoates such as polyhydroxybutyrate.

Because of their overwhelming presence in the world and the versatility of their chemistry and architecture, biobased materials are the sources of many industrial products, such as medicinal, chemicals, fibers, and paint, as well as plastics, and so on. Although most of them can be used for packaging purpose, the consumption of biobased materials in the packaging industry is only about 1%; a large portion of these products are currently produced from petroleum-derived materials. The limitation of petroleum resources and the awareness of environmental protection have raised a new prospect that biobased materials may be once again the major contributor to the industries. Biobased materials are less dense than metal, and some petroleum-derived thermal plastics, are ideal components for many structural materials. Most biobased polymers perform in a fashion similar to that of conventional polymers. Unlike petroleum-derived materials, most biobased materials are biodegradable. This property enables the end-use products of biobased materials to be disposed of upon completion of their useful life without causing any environmental concerns. This is attractive in the production and applications of packaging materials and has become their main focus. The use of biobased materials also addresses other economic issues: the use of surplus stocks and the production of higher value-added material from agricultural products and by-products. Therefore, the use of biobased materials promotes agrobusiness development.

Scientists and engineers are developing new technologies that will provide competitive cost for products from biobased materials, meet the standards of various applications, and optimize their performance (3–9). Presently, important research areas include: (I) Reproducibility and quality of biobased materials. These not only depend on the methods and processing conditions of separation, purification and fabrication, but also dramatically rely on the sources of raw materials, such as where grown, when harvested, and how and how long they are stored. All these variations make product quality control more complicated and difficult. (II) In composites, water absorption can be considered a disadvantage. Migration of water through the polymer can lead to disturbance of the filler/matrix interface, reducing the overall strength of the composites. Most biopolymers are hydrophilic. It is a challenge to improve the water resistance of biobased materials in order to retain good mechanical properties when the composites are exposed to highly humid conditions. (III) The durability of biobased materials is related to their biodegradability. The degradation of biobased products should be controllable and their properties should be constant during the time of their useful life. (IV) Gas barrier properties have specific significance in packaging materials. In particular, food packaging requires specific atmospheric conditions to sustain food freshness and overall quality during storage. Biobased materials mimic quite well the oxygen permeability of a wide range of the conventional petroleum-derived thermal plastics. As many of the biobased materials are hydrophilic, their gas barrier properties are very dependent on environmental humidity. (V) Thermal stability. Most category 1 biobased materials are not stable at higher temperature, limiting applications and choices of processing methods. (VI) Safety. Biobased materials, particularly those come from biological processes, may support microorganism growth. Concerns have risen over the spread of novel trails in existing populations and the introduction of modified species.

CATEGORY 1 BIOBASED MATERIALS

There are a large amount of polysaccharides and proteins that are directly isolated from agricultural or marine plants and animals, and they can be used in packaging applications. Examples of category 1 biobased materials include starch, cellulose, pectin, alginate, collagen, soybean flour protein, and zein. Most category 1 biobased materials exhibit useful gas barrier properties; but they are hydrophilic and unstable at higher temperature, causing problems in processing.

Starch

Starch is a widely available raw material suitable for a variety of applications, including packaging (10–12). Starch is a storage polysaccharide found in the cytoplasmic granules of plant cells. Starch is a composite consisting mainly of amylose and amylopectin, and it is primarily derived from corn, wheat, potatoes, and rice. Due to its huge availability and low cost in processing, starch is economically competitive with petroleum-derived materials and is therefore a promising candidate for preparing compostable plastics. Starch is nontoxic, biologically absorbable, resistant to passage of oxygen, and semipermeable to carbon dioxide. On the other hand, starch granules are rigid, and starch blends are brittle. Plasticizers, such as glycerol, low-molecular-weight polyhydroxy compounds, polyethers, or ureas, can be included in starch blends to reduce the intermolecular hydrogen bonding and thus increase the flexibility. Because of the hydrophilic nature of starch, the performance of starch blends changes during and after processing as a result of water content changes with the changes in humidity. Side-chain modification to obtain more hydrophobic starch derivatives is a strategy to overcome this challenge.

Cellulose

Cellulose is the most abundant naturally occurring polymer. Cellulose is a high-molecular-weight $1 \rightarrow 4$-beta-linked polymer of D-glucopyranose, which displays a diverse range of conformations and crystalline packing arrangements, as well as fiber structure. Because of its regular linear structure and array of hydroxyl groups, cellulose-based films tend to be tough and flexible and resistant to fat and oil. Cellulose is hydrophilic; it swells, but does not dissolve in water. To produce cellulose films, an aggressive process is required that involves several strong basic, strong acid and toxic solvents. Although, the resultant films possess good mechanical properties, they are hydrophilic and moisture-sensitive (1, 13).

Cellulose derivatives are used for film forming, coating, and encapsulating applications. Cellulose derivatives, such as ethyl cellulose, methyl cellulose, carboxy methyl cellulose, hydroxyethyl or hydroxypropyl cellulose, and cellulose acetate, are commercially available. Cellulose acetate possesses relatively low gas and moisture barrier properties (1, 10, 14–16).

Pectin

Pectin is a cell wall polysaccharide. The majority of the pectin structure consists of homopolymeric partially methylated poly α-$(1 \rightarrow 4)$-D-galacturonic acid residues ("smooth" regions), but there are substantial "hairy" regions of alternating α-$(1 \rightarrow 2)$-L-rhamnosyl-α-$(1 \rightarrow 4)$-D-galacturonosyl sections containing branch-points with mostly neutral side chains (1–20 residues) of mainly L-arabinose and D-galactose (rhamnogalacturonan I). Pectins may also contain rhamnogalacturonan II with side chains containing other residues such as D-xylose, L-fucose, D-glucuronic acid, D-apiose, 3-deoxy-D-*manno*-2-octulosonic acid, and 3-deoxy-D-*lyxo*-2-heptulosonic acid attached to poly α-$(1 \rightarrow 4)$-D-galacturonic acid regions. The types and amounts of substructural entities in pectin preparations depend on their source and extraction methodology. Commercial pectin is mainly derived from citrus peels and apple pomace. It can also come from sugar beet pulp and sunflower heads. Commercial extraction causes extensive degradation of the neutral sugar-containing side chains. The pectin molecule does not adopt a straight conformation in solution, but is extended and curved with a large amount of flexibility. The carboxylate groups tend to expand the structure of pectin. Methylation of these carboxylic acid groups forms their methyl esters, which are much more hydrophobic and have a different effect on the structure of surrounding water. Thus, the properties of pectin depend on the degree of esterification (D.E.). High D.E. pectin ($>40\%$ esterified) tends to gel through the formation of hydrogen-bonding and hydrophobic interactions at low solution pH (pH ~ 3.0) to reduce electrostatic repulsions, or in the presence of sugars ($>70\%$ esterified). Low D.E. pectin ($<40\%$ esterified) gels by calcium divalent cations that bridge adjacent twofold helical chains to form the so-called "egg-box" junction zone structures so long as a minimum of 14–20 residues can cooperate (17).

In addition to its gelling properties, pectin is a well-established film-forming material. In isolated form, pectin readily reassociates or aggregates to form networks, and it interacts with proteins, other polysaccharides, and synthetic hydrocolloids via hydrogen bonding, ionic, or hydrophobic interactions. This character has led to applications of pectin in encapsulation, coating, packaging, and wrapping for food and pharmaceutical products (18–20).

Alginate

Alginates are mainly derived from seaweed. The alginic acid family of linear $1 \rightarrow 4$-linked glycuronans are copolymers composed of beta-D-mannopyranuronic acid (M) residues and alpha-L-gulupyranuronic acid residues (G) that are arranged in homopolymeric blocks (GG and MM) and heteropolymeric (GM) sequences in varying proportions and distribution patterns. Alginates possess good film-forming properties that make them particularly useful in food packaging applications. Divalent cations, such as calcium, magnesium, manganese, and aluminum, are used as gelling reagents in alginate film formation. Calcium ion appears to be more effective in gelling alginate than other divalent ions; calcium propionate provides acceptable flavor. Desirable properties of alginate films include the improved product texture, juiciness, color, odor, and appearance, along with moisture retention and shrinkage reduction. Sodium alginate is water soluble. Sodium alginate coatings are used to extend the shelf life of foods and fruits (21, 22).

Chitin and Chitosan

In its structure, chitin is a cellulose analogue and is comprised of 1→4-beta-linked N-acetyl-D-glucosamine units. Chitin is the second most abundant glycan after cellulose, being present in the exoskelton of invertebrates. Chitin occurs in several crystalline polymorphic forms, of which the alpha-chitin is the most common. Like cellulose, chitin chains adopt a 2_1 screw axis. All of the hydroxyl groups are hydrogen bonded, and the bonding between sheets accounts for the fact that chitin does not swell in water. The fully or partially *N*-deacetylated derivative of chitin, chitosan, has received considerable attention. Some desirable properties of chitosan include its film forming properties, its antimicrobial activity, and the ability to absorb heavy metal ions. Chitosan films exhibit good oxygen and carbon dioxide permeability, as well as good mechanical properties. Chitosan films and coatings show activity against bacterial yeasts and molds, and they inhibit the growth of a number of microorganisms. The cationic nature of chitosan allows for electronic interactions with anionic compounds during processing and can lead to the incorporation of specific properties into products (23–25).

Collagen and Gelatin

Collagen is a major structural protein in vertebrates. Most of the ectodermal and mesodermal tissues are composed of collagen. In this sense, collagen is similar to cellulose and pectin, which serve a somewhat analogues role in plants. Collagen has triple helix architecture, thus collagen is insoluble and difficult to process. Commercially available collagens are extracted from animal skin, bone, and tendons. By taking advantages of biotechnology and genetic engineering, collagen can be obtained not only from animal tissues but also from bacterial cultures and even from genetically modified plants. Collagen films have strong mechanical properties and have been proposed for use in food packaging. Edible collagen films can become an integral part of meat products, and thus they function to reduce shrink loss and to increase juiciness and smoke permeability to the meat products (26–28).

Gelatin is a substantially pure product obtained by either partial acid or alkaline hydrolysis of collagen. The denaturation treatments disrupt the tight, helical structure of collagen and release water-soluble fragments that can form stiff gels and films. Gelatin is a highly processable material and is moisture-sensitive. Gelatin gels or films show thermally reversible behavior and melt below body temperature. Gelatin films and coatings have been used to carry flavors or antioxidants in food packaging applications (29, 30).

Soybean Flour Protein

Soy proteins are commercially available as soy flour (50% protein), soy concentrate (70% protein), and soy isolate (90% protein). Flours are made by grinding and sieving flakes. Concentrates are prepared by extracting and removing the soluble sugars from defatted flakes, by leaching with diluted acid at pH 4.5, or by leaching with aqueous ethanol. Isolate soy proteins are obtained by extracting the soluble proteins with water at pH 8–9, precipitating at pH 4.5, followed by centrifugation and drying. Soy proteins consist of two major protein fractions, 7S (conglycinin, 35%) and 11S (glycinin, 52%). Both fractions are considered as storage proteins and contain cysteine residues leading to disulfide bridge formation. Soy proteins are adhesive- and moisture-sensitive. Soy protein coatings can reduce moisture loss and control lipid oxidation in coated samples. Soy proteins are also used as binders for aqueous inks and as pigmented coatings on paperboard. Furthermore, soy flour proteins are proposed for the use in food coating, encapsulation, and active packaging (18, 19, 31, 32).

Zein

Zein is a class of alcohol-soluble prolamine proteins, obtained from corn gluten meal. Pure zein forms a hard, edible, clear, odorless, tasteless, and water-insoluble material, making it invaluable in processed foods and pharmaceuticals. Zein is now used as a coating for candy, nuts, fruit, pills, and other encapsulated foods and drugs. Zein can be further processed into resins and other bioplastic polymers by extrusion or rolling into a variety of plastic products. Zein-based films can function as water barriers and, thus, have potential use for packaging materials (33, 34).

Casein and Whey

Casein and whey are milk-derived proteins. Both have high nutritional values, excellent mechanical, and emulsion and barrier properties, and they are available in large volume worldwide. They have been used in the manufacture of edible films. Due to its random coil structure, casein is easily processable. By controlling the types of plasticizers, casein films can be made with very different mechanical properties varying from stiff and brittle to flexible and tough materials. Casein and whey films can reduce moisture loss, delay lipid oxidation, and reduce peroxide value of packaged food products (35–37).

CATEGORY 2 BIOBASED MATERIALS

The use of classical chemical methods to produce polymers, monomers, and other chemical “building block” materials from biobased feed stocks have generated a wide spectrum of category 2 products. Theoretically, all the conventional packaging materials currently derived from petroleum can be produced from monomers obtained from biobased materials; however, due to their high cost, the production of those monomers is not economically feasible. Thus, these costs have been an obstacle on the road to broadening the application of biobased monomers. An exception may be poly(lactic acid) (PLA) production. As a result of the increase in both the efficiency of lactic acid fermentation and the market price of raw oil, the cost of making poly(lactic acid) from biobased materials is gradually approaching the price of PLA obtained from fossil fuel.

Poly(Lactic acid)

Poly(lactic acid) or polylactide (PLA) is a thermoplastic, aliphatic polyester derived from fermentation of agricultural products and byproducts such as corn starch and other starch-rich substances like maize, sugar, or wheat. Bacterial fermentation is used to produce lactic acid, which is oligomerized and then catalytically dimerized for ring-opening polymerization. It can be easily produced in a high-molecular-weight form, most commonly using a stannous octoate catalyst. The properties of PLA strongly depend on the ratio of the two mesoforms (L and D) of the lactic acid monomer. Poly L-lactide (PLLA) is the product resulting from polymerization of L-lactide. PLLA has crystallinity around 37%, a glass transition temperature (T_g) of 50–80°C, and a melting temperature (T_m) of 173–178°C. If a mixture of D- and L-PLA is used, a polymer with adjustable T_m and T_g, PDLLA, can be obtained. The physical blends of PDLA and PLLA are useful for producing loose-fill packaging, compost bags, microwavable trays, food packaging and disposable tableware. PLA can also be plasticized by blending it with its monomer or oligomer. The resultant blends possess lower T_m and T_g. PLA resembles conventional petrochemical-based plastics in its characteristics and has good water vapor barrier properties and relatively low gas transmittance. PLA can be processed into fibers, blown films, injected molded objects, and coatings on standard equipment that already exist for the production of conventional thermoplastics. To date, PLA has shown the highest potential for a commercial major-scale production of biobased packaging materials (38–41).

Monomers and Chemical "Building Blocks"

A number of monomers and chemical "building blocks," low-molecular-weight organic compounds or chemical precursors for preparing polymeric materials, can be obtained from biobased materials (1, 2, 42, 43). Examples include castor oil, oleic acid, molasses, furfural, multifunctional alcohols, multifunctional acids, and terpenes.

Castor oil is used for the preparation of polyurethane. The resultant polyurethane is water-resistant and widely used in the electronics industry. Unsaturated fatty acids and oils, such as oleic acid, linoleic acid, and ricinoleic acid, can be recovered from seed crops, castor beans, coconut, flax, and other agricultural origins and have found applications in water-proof coatings and multi-layered packaging materials. Furthermore, oleic acid can be chemically transformed to multi-functional alcohols and acids, amines and esters. The resultant azelaic acid and azelaic diacid are used in polyamide synthesis.

Furfural can be produced from woody biomass and molasses. Furfural can be transformed to furfuryl alcohol and to furan resin and a wide range of furan chemicals. Levulinic acid also can be produced from woody materials. Levulinic acid is a precursor for the synthesis of various lactones, furans, and other functional building blocks, which are used in the production of packaging materials.

Succinic acid and 1,3-propanediol are two examples of chemicals, which are prepared by fermentation of carbohydrate-rich materials using selected microorganisms. Succinic acid and 1,3-propanediol can be used to make polyesters, which, in turn, are used for preparation of packaging materials. Terpene chemicals are isolated from pine trees and have resulted in a number of terpene-based products, which are used to prepare resin materials, or as fragrances incorporated into resin materials for active packaging (1, 42).

At present, biobased monomers and "building blocks" may not be commercially attractive. However, with the progress in biotechnology and genetic engineering, these represent promising alternatives to petroleum-derived materials.

CATEGORY 3 BIOBASED MATERIALS

This group includes polymers produced directly from biomass by natural or modified organisms.

Bacterial Cellulose

Cellulose is an important starting material in many industries. Plants are the main source of cellulose. A harsh chemical treatment is required to isolate plant cellulose from lignin, hemicellulose, and pectins. The treatment severely impairs the chemical and physical characteristics of plain cellulose, such as molecular depolymerization and changes in crystal structure. Bacterial strains of *Acetobacter xylinum* and *A. pasteurianus* are able to produce pure cellulose that originally formed in plants (homo-beta-1,4-glucan) under ambient conditions. Bacterial cellulose is highly crystalline (70% in cellulose I form) and has a molecular weight 15 times higher than that isolated from wood pulp. Although the bacterial cellulose shows outstanding mechanical properties, the production cost of bacterial cellulose is high and hampers its application in current packaging industries (44, 45).

Poly(hydroxyalkanoates)

Poly(hydroxyalkanoates) (PHAs) are a family of polyesters that are produced by a large number of bacteria, in the form of intracellular particles, functioning as energy and carbon reserve. The properties of PHAs are dependent on their monomer composition. The specific monomer composition of PHAs depends on the nature of carbon sources used and the bacterial strains selected, providing a tool to control the properties of the resultant final products. PHAs of medium-chain length are elastomers with low melting point and low crystallinity. Poly(hydroxybutyrate) (PHB) is an important member of PHAs. PHB is a highly crystalline thermoplastic. PHB mimics the mechanical behavior of poly(isopropylene). The incorporation of hydroxyvalerate can remarkably change the mechanical properties of PHB, such as a decrease in stiffness and tensile strength and an increase in toughness. PHAs possess a low water vapor permeability, which is close to LDPE. The functional groups in the side chains of PHAs make it possible to chemically modify the polymers. PHA also can be produced from genetically modified crops, such as switchgrass. All these provide an enormous potential of the polymer for packaging applications (46, 47). A commercially available PHA product, *Mirel*$^{\text{TM}}$, can be obtained from Metabolix (Cambridge, MA, USA).

BIBLIOGRAPHY

1. Report. *Biobased Packaging Materials for the Food Industry.* C. J. Weber, FAIR-CT98-4046, 2000, pp. 13–44.
2. C. J. Weber, V. Haggard, R. Festersen, and G. Bertelsen, *Food Additives Contam.* **19**, 172–177 (2002).
3. J. L. Peter, *J. Sci. Food Agric.* **86**, 1741–1742 (2006).
4. R. Montgomery, *Bioresource Technol.* **91**, 1–29 (2004).
5. A. Bismarck, A. Baltazar-Y-Jimenez, and K. Sarikakis, *Environ. Dev. Sustainability* **8**, 445–463 (2006).
6. Panel Report, *Portfolio1.3: Food and Non-Food Products*, Cooperative State Research, Education, and Extension Service, Office of the Administrator, U.S. Department of Agriculture. 2004, pp. 43–47.
7. Panel Report, Industrial Bioproducts: Today and Tomorrow, Office of Energy Efficiency and Renewable Energy, Office of the Biomass Program, U.S. Department of Energy. 2003, pp. 1–12.
8. K. van de Velde and P. Kiekens, *Polym. Testing* **21**, 433–442 (2002).
9. P. A. Fowler, J. M. Hughes, and R. Elias, *J. Sci. Food Agric.* **86**, 1781–1789 (2006).
10. C. N. Cutter, *Meat Science* **74**, 131–142 (2006).
11. C. N. Cutter and S. S. Summer, in A. Gennadios, ed., *Protein-Based Films and Coatings,* CRC Press, Boca Raton, FL, 2002, pp. 467–484.
12. M. Cannarsi, A. Baiano, R. Marino, M. Sinigaglia, and M. A. Del Nobile, *Meat Sci.* **70**, 259–265 (2005).
13. H. J. Cumba and D. Bellmer, ASAE Annual International Meeting. Tampa, FL, 2005, Paper number: 057032. http://asae.frymulti.com/request.asp?JID=5&AID=19659&-CID=tfl2005&T=2.
14. J. M. Hackney, *Int. J. Biol. Macromol.* **16**(4), 215–218 (1994).
15. N. E. Kotelnikova and E. F. Panarin, *Cellulose Chem. Technol.* 39(5–6), 437–456 (2005).
16. Ø. Ellefsen and N. Norman, *J. Polym. Sci.* **58**(166), 769–779 (2003).
17. H. A. Schols and A. G. J. Voragen, in J. Visser and A. G. J. Vorangen, eds., *Pectin and Pectinase*, Elsevier Science, Amsterdam, Holland, 1996, pp. 3–19.
18. L. S. Liu, C. -K. Liu, M. L. Fishman, and K. B. Hicks, *J. Agric. Food Chem.* **55**, 2349–2355 (2007).
19. L. S. Liu, M. L. Fishman, K. B. Hicks, D. R. Coffin, and M. Tunick, in M. L. Fishman, P. X. Qi, and L. Wicker, eds., *Advances in Biopolymers: Molecules, Clusters, Networks, and Interactions*, ACS series #935, ACS Press, Washington, DC, 2006, pp. 272–284.
20. M. L. Fishman, D. R. Coffin, J. J. Unruh, and T. Ly, *J. Macromol. Sci.* **A33**(5), 639–654 (1996).
21. J. C. N. Shackelford, G. W. Hanlon, and J.-Y. Maillard, *J. Antimicrob. Chemother.* **57**(2), 335–338 (2006).
22. S. K. Williams, J. L. Oblinger, and R. L. West, *J. Food Sci.* **43**(2), 292–296 (1978).
23. P. C. Srinivasa, M. N. Ramesh, K. R. Kumar and R. N. Tharanathan, *J. Food Eng.* **63**(1), 79–85 (2004).
24. O. B. G. Assis and J. H. Hotchkiss, *Packaging Technol. Sci.* **20**(4), 293–297 (2007).
25. N. E. Suyatma, A. Copinet, L. Tighzert, and V. Coma, *J. Polym. Environ.* **12**, 1–6 (2004).
26. H. Dinklage, H. Fink, and H-P. Wolf, U.S. Patent 4,525,418 (1985).
27. A. R. Schoenberg, U.S. Patent 5,083,665 (1992).
28. R. Villegas, T. P. O'Connor, J. P. Kerry, and D. J. Buckley, *Int. J. Food Sci. Technol.* **34**, 385–389 (1999).
29. C. N. Cutter and B. J. Miller, *J. Associ. Food Drug Officials* **68**(4), 64–77 (2004).
30. A. Gennadios, *Protein-Based Films and Coatings*, CRC Press, Boca Raton, FL, 2002.
31. Q. Wu and L. Zhang, *Ind. Eng. Chem. Res.* **40**(8), 1879–1883 (2001).
32. H. Park, S. H. Kim, S. T. Lim, D. H. Shin, S. Y. Choi, and K. T. Hwang, *JAOCS* **77**(3), 269–273 (2006).
33. A. M. Rakotonirainy, Q. Wang, and Q. W. Padua, *J. Food Sci.* **66**(8), 1108–1111 (2001).
34. D. Sessa, A. Mohamed, J. Byars, S. Hamaker, and G. Selling, *J. Appl. Polym. Sci.* **105**, 2877–2883 (2007).
35. J. H. Han, in A. Gennadios, ed., *Protein-Based Films and Coatings*, CRC Press, Boca Raton, FL, 2002, pp. 485–500.
36. A. A. Khwaldia, C. Perez, S. Banon, S. Desobry, and J. Hardy, *Criti. Rev. Food Sci. Nutr.* **44**, 239–251 (2004).
37. B. Cuq, N. Goutard, J-L. Cuq, and S. Guilbert, *Nahrung* **42**, 260–263 (1998).
38. P. Gruber and M. O'Brien, "Polylactides NatureWorks™ PLA" in A. Steinbüchel, ed., *Biopolymers*, Vol. 4. Toronto, Wiley-VCH, 2003, pp. 235–252.
39. K. Krishnamurthy, A. Demirci, V. Puri, and C. N. Cutter, *Transa. Am. Soc. Agric. Eng.* **47**, 1141–1149 (2004).
40. L. S. Liu, V. L. Finkenstadt, C.-K. Liu, T. Jin, M. L. Fishman, and K. B. Hicks, *J. Appl. Polym. Sci.* **106**(2), 801–810 (2007).
41. D. V. Plackett, V. K. Holm, P. Johansen, S. Ndoni, P. V. Nielsen, T. Sipilainen-Malm, A. Södergård, and S. Verstichel, *Packaging Technol. Sci.* **19**(1), 1–24 (2006).
42. Panel Report, Alternative Feedstocks Program, Technical and Economic Assessment: Thermal/Chemical and Bioprocessing Components. Office of Industrial Technologies, the U.S. Department of Energy. 1993.
43. Panel Report, Industrial Uses of Agricultural Materials: Situation and Outlook Report. Economic Research Service, the U.S. Department of Agriculture. 2004.
44. T. Tsuchida and F. Yoshinaga, *Pure Appl. Chem.* **69**(11), 2453–2458 (1997).

45. M. Popa and N. Belc, in A. Mcelhatton and R. J. Marshall, eds., *Food Safety: A Practical and Case Study Approach*, Springer, 2007, pp. 68–87.

46. G. M. Bohlmann, "Polyhydroxyalkanoate Production in Crops" in J. J. Bozell and M. K. Patel, eds., *Feedstocks for the Future: Renewables for the Production of Chemicals and Materials*, ACS Symposium Series number No. 921, ACS Press, Washington DC, (2006), 253–270.

47. C. Kuckertz, S. Jacobsen, and R. Brandt, EP Patent 1,334,160 (2003).

BIOFILM DEVELOPMENT ON PACKAGING MATERIALS

Paul Takhistov
Department of Food Science,
Rutgers University, New
Brunswick, New Jersey

INTRODUCTION

The term "microbial biofilm" or "biofilm" refers to the complex aggregation of microorganisms growing on a solid substrate such as a packaging material, not a film that is made of biopolymer. This article provides an introductory understanding of biofilm and its formation. Since a major function of packaging is to protect the product from microbial contamination and its associated heath risks, an understanding of biofilm is important, particularly for products which require aseptic packaging and retortable packaging.

Bacteria on the surface develop a biofilm-associated community with higher resistance to toxic compounds (1, 2) than their planktonic counterparts in the bulk. In general, biofilms result from physicochemical conditions and interactions in the bacteria/environment complex (3, 4). A biofilm consists of a living microbial biomass surrounded by an exopolysaccharide envelope (EPS), proteins, and nucleic acids, which the biofilm microorganisms produce. These components help bacteria to attach to surfaces, stabilize local environment, and spatially organize communities that need to collaborate to use the substrate effectively (5). The process of the microorganism's attachment to a surface is very complex, and the nature of both the microbial cell surface and the supporting surface (substratum) is critical for successful attachment (6). Surface adherence is an important survival mechanism for microorganisms. Moreover, the adhesion kinetics is the unique characteristic of a specific microorganism, differing even among phenotypes and strains (7). Several major factors affect attachment and consequently biofilm formation: the nature of the cell surface, the chemistry and texture of the attachment surface, the nature of the surrounding medium, and the temporal and spatial distribution of available nutrients (8–10).

A biofilm can be defined as a layer of microorganisms immobilized at a substratum held together in a multi-nature matrix polymer matrix (11). This matrix consists mainly of water (97%), microbial cells (2–5%), polysaccharides (neutral and polyanionic) (1–2%), proteins [including enzymes (1–2%)], and DNA and RNA from lysed cells (1–2%) (12). Usually, a mix consortium of microbes makes up this ecosystem, and they "team up" in order to protect themselves from stress and maximize nutrient uptake. One of the main components of a biofilm is the exopolysaccharide (EPS), which often consists of one or more family of different polysaccharides produced by at least some of the biofilm microorganisms. These components aid the attachment of cells to surfaces, stabilizing the local environment and spatial organization of the microbial communities, which may need to cooperate with each other to effectively use the available substrate (5).

BIOFILM ARCHITECTURE

A biofilm is a multiphase system. It consists of the biofilm itself, the overlying gas and/or liquid layer, and the substratum on which it (the biofilm) is immobilized. This system can be classified in terms of phases and compartments. The phases consist of the solid, liquid, and gas components, whereas the compartments consist of the substratum, the base film, the surface film, the bulk liquid and the gas. Biofilms are heterogeneous by nature, however, having stacks of cells scattered in a glycocalyx network with fluid-filled channels (13). Structurally, a biofilm is approximately two-dimensional, with its thickness ranging from a few micrometers to millimeters (5). This structure allows for the diffusion of nutrients and metabolic substances within the matrix.

Biofilm Organization. The microbes in a biofilm are typically organized into microcolonies embedded in the EPS polymer matrix (5). These microcolonies attain distinct 2-D or 3-D structural patterns. Initially, microcolonies are separated by void spaces, but ultimately they merge into unique structures forming a mature biofilm. This spatial organization is very important to the biological activity of the biofilm.

Extrapolysaccharide (EPS). EPS may vary in chemical and physical properties, but it is primarily composed of polysaccharides (11). Some of these polysaccharides can be neutral or polyanionic. Generally, this polymer can accommodate considerable amount of water into its structure by hydrogen bonding. Overall, the EPS has an important role of holding the biofilm together (14). As the EPS layer thickens, the biofilm microenvironment changes due to the activities of the bacteria. Therefore, a mature biofilm is a heterogeneous matrix. This heterogeneity concept is descriptive for both mixed and pure culture biofilms common on abiotic surfaces, including medical devices (15).

Quorum Sensing. Quorum-sensing gene expression has been proposed as an essential component of biofilm physiology, since biofilm typically contains high concentration of cells (16). Generally, the irreversible attachment of bacteria to a substratum triggers alteration to an array of gene expression and phenotypes of these cells (17). In the quorum-sensing process, cell–cell communication is accomplished through the exchange of extracellular signaling molecules (16). For most gram-negative bacteria, the quorum-sensing regulation involves a freely diffusible auto-inducer, acylhomoserine lactone (AHL) signaling molecule. For instance, the quorum-sensing ability in *P. aeruginosa* is dependent upon two distinct but interrelated systems, *las* and *rhl* (18), which directs formation of the AHL. In gram-positive bacteria, structurally diverse peptides act as quorum sensing regulators (19). The QS system is not necessarily involved in the initial attachment and growth stages of biofilm formation but is very important in the overall biofilm differentiation process (20). During biofilm formation, QS signaling molecule mutants may develop thicker, more acid-resistant (21) or "abnormal" biofilms (22) than do the wild-type strains.

BIOFILM LIFE CYCLE

Once immobilized on a contact surface, microorganisms have the potential to form a biofilm. Attachment to the surface is beneficial to the microbe for a number of reasons. First, the surface represents important microbial habitats because in the microenvironment of a surface, nutrient levels may be much higher than they are in the bulk solution (23). Second, it increases the microbes' resistance to mechanical and chemical stresses. Overall, biofilm formation is a dynamic process, comprised of four main stages (24): migration of cells to the substratum, adsorption of the cells to the substratum, growth and metabolic processes within the biofilm, and detachment of portions of the biofilm (see Figure 1). These steps can be divided into three phases: initial events, exponential accumulation and steady state.

Surface Conditioning Film Formation. The conditioning film is created when organic materials (polysaccharides and proteins) settle on the surface (11). It can be derived from the microbes in the vessel or from the bulk fluid. Adsorption of a conditioning film is relatively quick compared to the other steps. This film has the potential to alter the physicochemical properties of the substratum and thus greatly impacts bacterial attachment.

Cell Migration to the Surface. Migration of microorganism to the substratum is considered the second step in biofilm formation. This process can be mediated by different mechanisms depending on the system under consideration. Thus, transport can be (a) active, facilitated by flagella (25), or (b) passive, facilitated by Brownian diffusion, convection, or sedimentation. In quiescent systems (batch culture), sedimentation rates for bacteria are generally low due to their size and specific gravity (11), and microbes with a diameter of 1–4 μm^3 have small Brownian diffusivity. Therefore, motility may be the limiting factor of transport in such systems. In a laminar flow system, although motility affects transport, diffusion remains the controlling factor. In a turbulent flow system, Brownian diffusion has minute contributions to transport, but forces such as frictional drag force, eddy diffusion, lift force, and turbulent bursts are significant.

Factors that Impact Interactions of Bacteria with a Substrate

Microbial adhesion is mediated by specific interactions between cell surface structures and specific molecular groups on the substratum. Moreover, the adhesion process is determined by physicochemical and molecular interactions. It is believed that primary adhesion between bacteria and abiotic surfaces is generally determined by nonspecific (e.g., hydrophobic) interactions, whereas adhesion to living or devitalized tissue is accomplished through specific molecular (lectin, ligand, or a adhesion) mechanisms (26).

Physicochemical Interactions. Generally, two types of physicochemical interactions are used to describe the adhesion of a microorganism to a planar surface. The DLVO approach relates to the interaction energies (attraction and repulsion)—primarily to electrostatic and van der Waals forces—but chemical forces can operate (27). Typically, attraction between microbe and surface occurs either at a long range (5–8 nm), a secondary minimum, or at a shorter range, the primary minimum. Thus, adhesion can be reversible (at the secondary minimum)

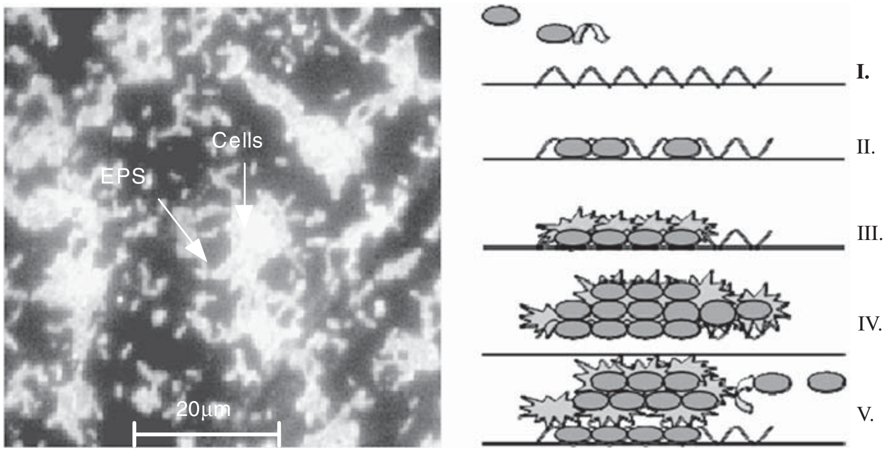

Figure 1. *Listeria* biofilm on the packaging surface and schematic representation of biofilm formation. Step I: Conditioning film formation. Step II: Bacteria migration to the conditioned surface. Step III: The cells start to produce extracellular polysaccharides (EPS), which cause an irreversible attachment. Step IV: Gradually, the biofilm increases through growth of the irreversibly attached cells and new ones from the solution. Step V: Cells near the outer surface can dislodge from the biofilm and escape to colonize new microenvironments.

or irreversible (toward the primary minimum) (11). In the DLVO approach, the ionic charge of the medium, the physicochemistry of both the bacteria and substratum surface, and the physicochemistry of biosurfactant determine the extent of adhesion.

Alternatively, in the thermodynamic approach, adhesion is described as the formation of a new interface between the substratum surface and adhering bacteria at the expense of (a) the interfaces between bacteria and the suspending liquid and (b) the substratum–liquid interface (5). Each interface contains a specific amount of interfacial energy (or surface tension). The extent of adhesion is determined by the surface properties of all three phases, the surface tension of adhering particles, of the substratum and of the medium (28). The more hydrophilic a substrate, the higher is its surface tension.

Molecular Interactions. Bacterial adherence is also mediated by molecular mechanisms. Bacteria are able to adhere to animal cells (29), such as muscle meats through protein–protein interactions on the surface. These proteins sometimes function as ligands to receptors when the bacteria invade target cells and/or have specific affinity for host components (30). The colony-opacity-associated (Opa) outer-membrane proteins or ligands (often called an a adhesion) confer intimate bacterial association with mammalian cells. Two classes of cellular receptors for Opa protein receptors have been identified: a adhesio-sulfate proteoglycan (HSPG) receptors and members of the carcinoembryonic antigen (CEA) or CD66 family (31). *Listeria monocytogenes* surface proteins Internalin A (InlA) and B (InlB) are involved in the attachment of this bacterium to host cells (32).

The magnitude of the cell substratum interaction forces, the chemical heterogeneity and the roughness of the substratum surface greatly affect the extent of microbial adhesion. As food traverses from the farm to the table, it comes in contact with fabricating equipments, utensils, gaskets, conveyor belts, packaging materials, storage containers, and chopping boards. These surfaces are usually metallic, plastic, rubber, or wood. Food processing equipments are often made of stainless steel, transport crates of high-density polyethylene (HPDE), conveyor belts of rubber, chopping boards of wood, and packaging materials of aluminum. Other storage and packaging-type materials include polypropylene, PVC, and Teflon. Sometimes the contact time between foods and surface may be 24–48 hours depending on the processing conditions including design of equipment cleaning and sanitation techniques.

Substratum Surface Hydrophobicity. The hydrophobicity of the substratum has substantial effect on bacterial adhesion. Typically, hydrophilic surfaces such as stainless steel and glass have a high free surface energy and thus allow greater bacteria attachment than do hydrophobic surfaces such as Teflon (25). For instance, a general trend of decreasing colonization density was observed for *Staphylococcus epidermis* and *Pseudomonas aeruginosa* with an increase in substratum hydrophobicity (33). In the above-mentioned study, the packaging materials used were stainless steel, poly(vinyl chloride), polystyrene, and glass. Likewise, biofilm formation by *L. monocytogenes* LO28 was faster on hydrophilic (stainless steel) than on hydrophobic polytetrafluoroethylene (PTFE) (34).

Substratum-Surface Roughness/Topography. Many reports have indicated that metal surfaces with a high degree of roughness serve as a better substrate for bacterial attachment than do smooth ones, since the surface area of the former is greater (33, 35). Arnold and others discovered that resistance to bacteria attachment decreased in the following order: *Electropolished > Sanded > Blasted > Untreated Stainless Steel*. Bower and Daeschel (1) illustrated that surface topography is extremely important in biofilm formation and resistance. Still studies such as that of Barnes et al. (36) claimed that the difference in bacteria attachment due to difference in surface topography is minimal.

Substratum Coverage with Organic Material. The layer of organic substances present on the surface can be favorable or unfavorable to bacteria adhesion. Barnes et al. (36) discovered that proteins that adsorbed to a stainless steel surface inhibited bacterial attachment. The dominating mechanism was suspected to be competitive inhibition, since the proteins were able to interact with the hydrophilic surface. The adhesion process begins, provided that the conditioning film is favorable to bacterial attachment.

Bulk Nutrient Composition. Generally, bulk fluid conditions influence surface hydrophobicity, adhesion expressions, and other factors that affect adhesiveness (37). Microbes are usually exposed to a range of nutrients concentrations from as low as 1 μg/L to 500 g/L, and this range has an effect on biofilm growth (5). At the highest nutrient concentrations, biofilms can appear to be uniform with few or no pores. This is common of biofilms associated with animal and food surfaces. Various reports suggest that the lower the concentration of nutrients, the greater the rate of attachment and biofilm development (38–40). *Escherichia coli* O157:H7 biofilms developed in minimal salts medium (MSM) developed faster and had thicker extracellular matrix, and cells detached much slower compared to those grown in trypticase soy broth (TSB) (38).

Temperature. Temperature effect is particularly important in the food industry, since food will experience differentials in temperature (temperature abuse) from farm to fork. This abuse is a consequence of changes in cell wall and attachment factors (41). Stopforth et al. (42) showed that a greater number of *Listeria monocytogenes* cells adhered to stainless steel templates at 59 °F and 77 °F compared to 41 °F and 95 °F. Moreover, Stepanovic et al. (43) suggested that a microaerophilic environment supports biofilm formation. Presently, there are few conclusive reports that support this claim.

Ionic Strength. The atomic ions present in the medium can indirectly affect attachment of the bacteria to other substratum. These ions may act as chelator, forming bridges between protein molecules on the bacteria surface and adsorbed proteins on the substratum surface. For example, with milk-treated steel, ferrous ions in solution increased *Listeria monocytogenes* attachment (36). Ions in the solution can also act as shields, shielding the surface charge of the substratum and the bacteria (44) and increasing bacteria attachment (45, 46). The ionic composition in the bulk may affect the composition of the metabolic by products of biofilm cells but not necessarily affect the physical property of the biofilm (47).

Hydrodynamics. The flow velocity in close proximity to the substratum and the liquid boundary (hydrodynamics) has marked influence on the cellular interaction and the biofilm structure. Cells behave as particles in a liquid, and the rate of settling and association with a submerged surface depends greatly on the velocity characteristics of the liquid (48). After the bacteria has attached, flow rate or shear force of the liquid affects the biofilm structure and content (25). More compact, stable, and denser biofilms were formed at relatively higher hydrodynamic shear force (49).

Atmosphere. The incubation atmosphere also influences biofilm formation. For instance, a microaerophilic and carbon dioxide-rich environment provided a relatively high rate of biofilm formation, whereas the least amount of biofilm was formed under anaerobic conditions (43). On the other hand, anaerobic growth favors maintenance of mucoid alginate (polysaccharide) production by *Pseudomonas* in cystic fibrosis airways (50).

BIOFILM FORMATION ON THE SURFACE OF THE PACKAGING MATERIALS

All “real-life” surfaces have substantial nonuniformity, with the surface irregularities (patterns) size ranging from nanometers to hundreds of microns. Although a number of studies have investigated the influence of the surface topography on biofilm formation by various microorganisms, including foodborne pathogens (1, 10, 51–53), most published results are devoted to the biofilm development in flow-through systems. It is difficult to separate the effects of surface patterns and those of the liquid flow on bacteria adhesion in such systems.

An ability to adhere to a surface provides an important survival mechanism for microorganisms (9). The process of microorganism’s attachment to the material surface is very complex, and the nature of both the microbial cell surface and the supporting substrate is important (6). For example, an electropolished stainless steel substratum showed significantly lower bacterial cells adhesion rate and delay in biofilm formation, compared with the sandblasted one (54). Planktonic microbial cells are delivered by diffusion and motility from a bulk medium to the surface, where a fraction of those cells adheres to the surface. The dynamics of bacterial adhesion is a unique characteristic of the specific microorganism; there may even be differences among the phenotypes and strains of the same bacterium (7).

Bacterial colonization of surfaces is influenced by two factors: First, a well-developed surface has higher adsorption capacity, and therefore the preconditioning organic film necessary for bacteria attachment is more likely to be formed on such a surface. On the other hand, surface topography influences bacterial attachment and proliferation, limiting the directions of colony growth and limiting nutrient access.

Surface topography was found to greatly affect the behavior and morphology of bacterial cells within colonies during the initial stages of biofilm development. In an effort to maximize their survival rate, bacteria form clusters of unique shapes, ranging from two-dimensional (2-D) single-layer colonies to three-dimensional (3-D) pillar-like structures within grooves. Hence, it is possible to control initial colony shape by varying the characteristics of surface constraints. Coupled with surface topography, starvation may play an important role in the attachment of bacteria to the surface, which is directly supported by our observations of bacterial behavior in the surface confines with limited nutrient access.

In general, surface patterns (i.e., roughness) impact microbial population in several ways: A well-developed (patterned) surface has higher adsorption capacity, whereas the presence of highly inclined regions (constraints) makes cell attachment more difficult. As follows from the obtained data, initial biofilm formation on rough surfaces occurs in two dimensions. If nutrient access is limited by the configuration of surface constraints and/or diffusion transport, bacteria can develop 3-D structures. On the other hand, if the tested surface is plain and smooth, bacteria always spread over it as a single-layer (2-D) colony. Maturing of the biofilm and corresponding total surface coverage lead to the development of three-dimensional structures, which have been previously described in the literature (4, 55, 56) and also observed in our experiments.

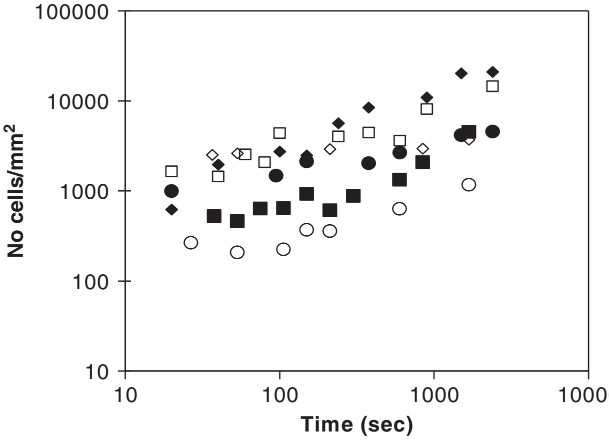

Figure 2. Effect of substratum type on the number of *Listeria monocytogenes* which become attached. The substrata are: ◆ aluminum; ☐ polypropylene; • poly(ethyleneterephthalate); ◇ high-density polyethylene; ■ poly(vinyl chloride); ○ poly(tetrafluorethylene).

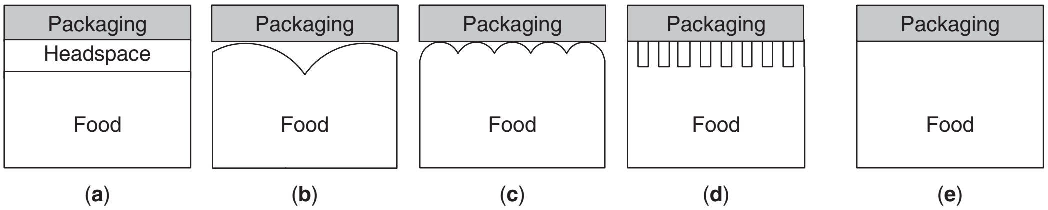

Figure 3. Spatial organization of AP as a function of food surface morphology: direct contact (**a**), partial contact ~1 cm (**b**), ~1 mm (**c**), ~10 μm (**d**), and direct contact (**e**).

Kinetics of bacterial adhesion onto surface of selected packaging materials is depicted in Figure 2. These results support data in the literature that adhesion of *Listeria monocytogenes* is material-dependent (34, 57).

FOODBORNE BIOFILMS AND ACTIVE (CONTROLLED-RELEASE) PACKAGING MATERIALS

The food market has growing demand on fresh and minimally processed foods. However, these foods are highly perishable and more susceptible to microbial spoilage. Thus, there is a strong need to develop new preservation methods to achieve a required level of safety, quality, and nutritional value of food during extended shelf-life period. The use of active packaging (AP) materials is one of the post-processing methods to preserve food products and meet consumers' expectations.

Antimicrobial packaging is designed to control microbial growth in a food product. It consists of an antimicrobial agent (AMA) immobilized onto the internal surface of a package or incorporated into packaging material (58). In the latter case, AMA is released into a food product over time. This permits us to extend shelf life of food products, helping to reduce the amount of AMA in food formulation.

AP materials have many parameters that influence their antimicrobial efficacy, which is thoroughly addressed in a number of studies: polymer processing, polymer morphology (59), polymer swelling (60), and AMA affinity to the packaging material (61). In all these papers the food product was considered as a homogeneous medium in full contact with the packaging. However, surface morphology of the foods is an important parameter that determines mass transfer of an antimicrobial agent through the interface between packaging and food.

Based on the nature of a food product and corresponding morphology of a food surface, one can distinguish five types of food-packaging contacts depicted in Figure 3.

If the surface of a food product is flat, direct contact between the packaging and the food exists. This AP system has maximum efficacy. An irregular food surface will cause only partial contact between the packaging material and the food product, developing noncontinuous headspace. This influences AMA transport from the packaging to the food. Depending on the dominating physical state of a food product, the packaging surface can be in contact with either solid or liquid food products, sometimes both. These contacts can be direct or indirect if headspace exists between the food surface and packaging material (see Figure 4). Depending on the type of the food product, the headspace can be liquid- or gas-filled.

Numerous parameters can influence the efficacy of AP, including the packaging material properties, the antimicrobial transport, the bacterial population response and the food matrix. Most of the published studies investigated antimicrobial activity of the controlled release compound by adding AMA directly to the foods or to the packaging materials. However, these two methods have significant disadvantages:

- When AMA is added directly to the food, obtained data provide important information on the antimicrobial activity of AMA and its interaction with the food matrix. But there is no time-dependent AMA release; therefore these studies are insufficient for the development of AP.
- On the other hand, if AMA is incorporated into the packaging material, there is no control over the antimicrobial release. The effects of packaging material properties on the AMA release rate cannot be distinguished from the effects of the AMA release rate on the bacterial inhibition.

There is a need to understand bacterial response to the AMA release without the influence of material-dependent properties of AP. No standard method has been established

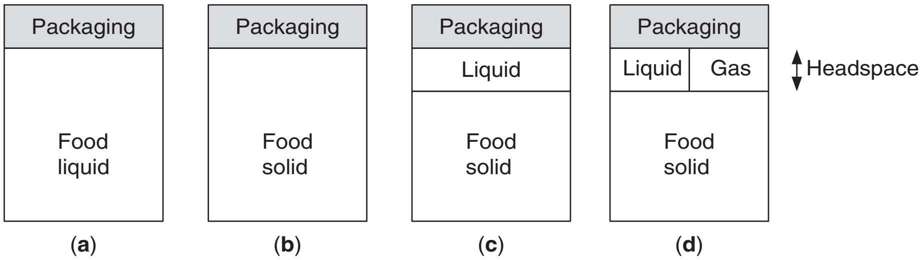

Figure 4. Dependence of a food/packaging interface on a type of food product.

to investigate the effect of antimicrobial agent's time-dependent release on the bacterial response.

BIBLIOGRAPHY

1. C. K. Bower and M. A. Daeschel, "Resistance Responses of Microorganisms in Food Environments," *Int. J. Food Microbiol*. **50**(1–2), 33–44 (1999).
2. T.-F. C. Mah and G. A. O'Toole, "Mechanisms of Biofilm Resistance to Antimicrobial Agents," *Trends Microbiol*. **9**(1), 34–39 (2001).
3. M. V. Loosdrecht, C. Picioreanu, and J. Heijnen, "A More Unifying Hypothesis for Biofilm Structures," *FEMS Microbiol. Ecol*., **24,** 181–183 (1997).
4. J. W. T. Wimpenny and R. Colasanti, "A Unifying Hypothesis for the Structure of Microbial Biofilms Based on Cellular Automaton Models," *FEMS Microbiol. Ecol*., **22**(1), 1–16 (1997).
5. L. V. Evans ed., "*Biofilms: Recent Advances in Their Study and Control*," Harwood Academic Publishers, Amsterdam, 2000, p. 466.
6. R. Blake, W. Nortonb, and G. Howardb, "Adherence and Growth of a Bacillus Species on an Insoluble Polyester Polyurethane," *Int. Biodeterior. Biodegrad*. **42,** 63–73 (1988).
7. M. L. Kalmokoff, et al., "Adsorption, Attachment and Biofilm Formation Among Isolates of *Listeria Monocytogenes* using Model Conditions," *J. Appl. Microbiol*. **91**(4), 725–34 (2001).
8. I. Apilanez, A. Gutierrez, and M. Diaz, "Effect of Surface Materials on Initial Biofilm Development," *Bioresour. Technol*., **66**(3), 225–230 (1998).
9. C. K. Bower, J. McGuire, and M. A. Daeschel, "The Adhesion and Detachment of Bacteria and Spores on Food-Contact Surfaces," *Trends Food Sci. Technol*. **7**(5), 152–157 (1996).
10. T. Scheuerman, A. Camper, and M. Hamilton, "Effects of Substratum Topography on Bacterial Adhesion," *J. Colloid Interface Sci*. **208,** 23–33 (1998).
11. G. William, and K. C. M. Characklis, "*Biofilms*, in R. Mitchell, ed., New York, Wiley Interscience Publication, John Wiley & Sons, 1990.
12. A. J. Sutherland, I. W. Sutherland, "The Biofilm Matrix—An Immobilized but Dynamic Microbial Environment," *J. Org. Chem*. **66**(26), 9033–9037 (2001).
13. L. H. G. Morton, et al., "Consideration of Some Implications of the Resistance of Biofilms to Biocides," *Int. Biodeter. Biodegrad*. **41**(3–4 SU), 247–259 (1998).
14. S. Tsuneda, et al., "Extracellular Polymeric Substances Responsible for Bacterial Adhesion onto Solid Surface," *FEMS Microbiol. Lett*. **223**(2), 287–292 (2003).
15. R. M. Donlan, "*Biofilms: Microbial Life on Surfaces*," *Emerg. Infect. Dise.* **8**(9), 881–890 (2002).
16. R. J. McLean, et al., "Evidence of Autoinducer Activity in Naturally Occurring Biofilms," *FEMS Microbiol. Lett*. **154**(2), 259–263 (1997).
17. I. Nakagawa, S. Hamada, and A. Amano, "Studying Initial Phase of Biofilm Formation: Molecular Interaction of Host Proteins and Bacterial Surface Components," *Methods Enzymol*. **310**, 501–513 (1999).
18. M. E. Shirtliff, J. T. Mader, and A. K. Camper, "Molecular Interactions in Biofilms," *Chemi. Biol*. **9**(8), 859–871 (2002).
19. B. A. Lazazzera, "Quorum Sensing and Starvation: Signals for Entry into Stationary Phase," *Curr. Opini. Microbiol*. **3**(2), 177–182 (2000).
20. J. P. Pearson et al., "*Pseudomonas áeruginosa* Cell-to-Cell Signaling Is Required for Virulence in a Model of Acute Pulmonary Infection," *Infect. Immun*. **68**(7), 4331–4334 (2000).
21. J. Zhu, and J. J. Mekalanos, "*Quorum Sensing-Dependent Biofilms Enhance Colonization in Vibrio cholerae*," *Dev. Cell* **5**(4), 647–656 (2003).
22. M. R. Parsek, et al., "Regulation of the Alginate Biosynthesis Gene algC in *Pseudomonas áeruginosa* during Biofilm Development in Continuous Culture," *Science*, **280**(5361), 295–298 (1998).
23. T. D. Brock, J. M. M. Michael, T. Madigan, and J. Parker, eds., "*Brock Biology of Microorganisms*," 10th edition, Prentice Hall, Upper Saddle River, NJ (2002).
24. R. M. Boom et al., "Quantifying Recontamination through Factory Environments—A Review," *Int. J. Food Microbiol*. **80**(2), 117–130 (2003).
25. R. A. N. Chmielewski, J. F. Frank, "Biofilm Formation and Control in Food Processing Facilities," *Comp. Rev. Food Sci. Safety* **2**, 22–31 (2003).
26. W. M. Dunne, Jr., "*Bacterial Adhesion: Seen Any Good Biofilms Lately*?," *Clin. Microbiol. Rev*. **15**(2), 155–166 (2002).
27. D. C. Ellwood, ed., "*Adhesion of Microorganisms to Surfaces*," Academic Press, London, 216 (1979).
28. W. Zingg, et al., "Surface Thermodynamics of bacterial Adhesion," *Trans. Am. Soc. Artificial Internal Organs* **29**, 146–151 (1983).
29. P. Cossart, J. Pizarro-Cerda, and M. Lecuit, "Invasion of Mammalian Cells by *Listeria monocytogenes*: Functional Mimicry to Subvert Cellular Functions," *Trends Cell Biol*. **13**(1), 23–31 (2003).
30. Y. Shimoji, et al., "Adhesive Surface Proteins of Erysipelothrix rhusiopathiae Bind to Polystyrene, Fibronectin, and Type I and IV Collagens," *J. Bacteriol*. **185**(9), 2739–2748 (2003).
31. M. Koomey, "Implications of Molecular Contacts and Signaling Initiated by Neisseria gonorrhoeae," *Curr. Opin. Microbiol*. **4**(1), 53–57 (2001).
32. A. J. Roberts and M. Wiedmann, "Pathogen, Host and Environmental Factors Contributing to the Pathogenesis of Listeriosis," *Cell. Mol. Life Sci*. **60**(5), 904–918 (2003).
33. P. J. G. H. Eginton, P. S. Handley, P. Gilbert, "The Influence of Substratum Properties on the Attachment of Bacterial Cells," *Colloids Surf. B: Biointerfaces*, **5**, 153–159 (1995).
34. P. Chavant, et al., "*Listeria monocytogenes* LO28: Surface Physicochemical Properties and Ability to Form Biofilms at Different Temperatures and Growth Phases," *Appl. Environ. Microbiol*. **68**(2), 728–737 (2002).
35. J. W. Arnold and G. W. Bailey, "Surface Finishes on Stainless Steel Reduce Bacterial Attachment and Early Biofilm Formation: Scanning Electron and Atomic Force Microscopy Study," *Poultry Sci*. **79**(12), 1839–1845 (2000).
36. L. M. Barnes, et al., "Effect of Milk Proteins on Adhesion of Bacteria to Stainless Steel Surfaces," *Appl. and Environ. Microbiol*. **65**(10), 4543–4548 (1999).
37. G. Reid, "Adhesion of Urogenital Organisms to Polymers and Prosthetic Devices," *Methods in Enzymol*. **253**, 514–519 (1995).
38. A. C. L. W. Ratih Dewanti, "Influence of Culture Conditions on Biofilm Formation by E. coli O157:H7," *Int. J. food Microbiol*. **26**, 147–164 (1995).

39. R. Boe-Hansen, et al., “Bulk Water Phase and Biofilm Growth in Drinking Water at Low Nutrient Conditions,” *Water Res.* **36**(18), 4477–4486 (2002).
40. A. G. Turnbull, et al., “The Role of Motility in the In Vitro Attachment of Pseudomonas putida PaW8 to Wheat Roots,” *FEMS Microbiol. Ecol.* **35**(1), 57–65 (2001).
41. L. Gorski, J. D. Palumbo, and R. E. Mandrell, “*Attachment of Listeria monocytogenes to Radish Tissue is Dependent upon Temperature and Flagellar Motility*,” *Appl. Environ. Microbiol.* **69**(1), 258–266 (2003).
42. J. D. Stopforth, et al., “Biofilm Formation by Acid-Adapted and Nonadapted Listeria monocytogenes in Fresh Beef Decontamination Washings and Its Subsequent Inactivation with Sanitizers,” *J. Food Protection* **65**(11), 1717–1727 (2002).
43. S. Stepanovic, et al., “Influence of the Incubation Temperature, Atmosphere and Dynamic Conditions on Biofilm Formation by Salmonella spp,” *Food Microbiol.* **20**(3 SU), 339–343 (2003).
44. S. Bouttier, et al., “Attachment of Salmonella choleraesuis to Beef Muscle and Adipose Tissues,” *J. Food Protection* **60**(1), 16–22 (1997).
45. M. Mercier-Bonin, et al., “Study of Bioadhesion on a Flat Plate with a Yeast/Glass Model System,” *J. Colloid Interface Sci.* **271**(2), 342–350 (2004).
46. S. B. Sadr Ghayeni, et al., “Adhesion of Waste Water Bacteria to Reverse Osmosis Membranes,” *J. Membrane Sci.* **138**(1), 29–42 (1998).
47. M. Batte, et al., “Biofilm Responses to Ageing and to a High Phosphate Load in a Bench-Scale Drinking Water System,” *Water Res.* **37**(6), 1351–1361 (2003).
48. C. J. Donlan, F. Courchamp, and B. A. Lazazzera, “Quorum Sensing and Starvation: Signals for Entry into Stationary Phase,” *Proc. Nat. Acad. Sci. USA* **99**(2), 791–796 (2002).
49. Y. Liu, J.-H. Tay, “The Essential Role of Hydrodynamic Shear Force in the Formation of Biofilm and Granular Sludge,” *Water Res.* **36**(7), 1653–1665 (2002).
50. D. J. Hassett, et al., “Anaerobic Metabolism and Quorum Sensing by *Pseudomonas áeruginosa Biofilms in Chronically Infected Cystic Fibrosis Airways: Rethinking Antibiotic* Treatment Strategies and Drug Targets,” *Adv. Drug Delivery Rev.* **54**(11), 1425–1443 (2002).
51. A. Silverstein and C. F. Donatucci, “Bacterial Biofilms and Implantable Prosthetic Devices,” *Int. J. Impotence Res.* **15**, S150–S154 (2003).
52. K. M.Weincek and M. Fletcher, “Effects of Substratum Wettability and Molecular Topography on the initial adhesion of Bacteria to Chemically Defined Substrata,” *Biofouling* **11**, 293–311 (1997).
53. K. J. Edwards and A. D. Rutenberg, “Microbial Response to Surface Microtopography: The Role of Metabolism in Localized Mineral Dissolution,” *Chem. Geol.* **180**(1–4), 19–32 (2001).
54. J. Arnold and G. Bailey, “Surface Finishes on Stainless Steel Reduce Bacterial Attachment and Early Biofilm Formation: Scanning Electron and Atomic Force Microscopy Study,” *Poultry Sci.* **79**, 1839–1845 (2000).
55. M. Zaiat, L. Vieira, and E. Foresti, “Intrinsic Kinetic Parameters of Substrate Utilization by Immobilized Anaerobic Sludge,” *Biotechnol. Bioeng.* **53**(2), 220–225 (1997).
56. E. Wentland, et al., “Spatial Variations in Growth Rate within Klebsiella pneumoniae Colonies and Biofilm,” Biotechnol. Progress **12**(3), 316–321 (1996).
57. E. Sinde and J. Carballo, “Attachment of Salmonella spp. and Listeria monocytogenes to Stainless Steel, Rubber and Polytetrafluorethylene: The influence of free energy and the effect of commercial sanitizers,” *Food Microbiol.* **17**(4), 439–447 (2000).
58. J. H. Han and J. D. Floros, “Simulating Diffusion Model and Determining Diffusivity of Potassium Sorbate Through Plastics to Develop Antimicrobial Packaging Films,” *J. Food Processing Preservation*, **22**(2), 107–122 (1998).
59. K. Petersen, et al., “Potential of Biobased Materials for Food Packaging,” *Trends Food Sci. Technol.* **10**(2), 52–68 (1999).
60. G. G. Buonocore, et al., “Controlled Release of Antimicrobial Compounds from Highly Swellable Polymers,”
61. R. C. Soliva-Fortuny and O. Martin-Belloso, “New Advances in Extending the Shelf-Life of Fresh-Cut Fruits: A Review,” *Trends Food Sci. Technol.* **14**(9), 341–353 (2003).

BIOSENSOR TECHNOLOGY FOR FOOD PACKAGING APPLICATIONS

Paul Takhistov
Department of Food Science,
Rutgers, the State University of
New Jersey New Brunswick,
New Jersy

This article provides an introduction to the emerging technology of biosensors and its potential applications to food packaging. This biosensor technology may used to enhance the communication function of the intelligent packaging system (see the Intelligent Packaging article) to enhance the safety and quality of food products.

NEEDS OF FOOD QUALITY/SAFETY CONTROL

Food quality control is essential in the food industry; nowadays, an efficient quality assurance is becoming increasingly important. Consumers expect adequate quality of food product at a fair price, long shelf life, and high product safety, whereas food inspectors require safe manufacturing practices, adequate product labeling, and compliance with the U.S. Food and Drug Administration (FDA) regulations. Further more, food producers are increasingly demanding the efficient control methods, particularly through online or at-line quality sensors to satisfy consumers' and regulatory requirements and to improve the feasibility of automated food processing and quality of sorting. Also, food producers are demanding a reduction in the production time (increase throughput) and the final product cost.

Novel sensing technologies using biomaterials or nanomaterials can be used to detect quality and safety attributes in packaged foods. These sensing technologies range from rapid non destructive and noncontact to highly specialized microsensing and nanobiosensing structures. Micro- and nano-based sensors that use a variety of transduction mechanisms to sense microbial and biochemical changes in food products are being explored. Extensive development of biosensors for food safety and quality control were stimulated by acquiring several new food safety and key quality concepts during the last decade, such as Hazard Analysis Critical Control Points (see the HACCP article), Total Quality Management (TQM), and ISO 9000 Certifications. The wave of terrorist acts and foodborne disease outbreaks have raised the importance of the food traceability and authentication (1, 2). There are specific safety problems (pathogenic micro-organisms, BSE, GMF, pollutants, etc.) that require intensive control, data logging, and data treatments, which can be controlled effectively only with the new generations of biodetection systems (3). All these tasks require rapid responce sensors for new integrated data analysis systems and are an indispensable part of the modern supply chain operation paradigm.

There are several possible sources of undesirable contaminations and/or changes in food products that can be combined in five groups by their localization and occurrence. Three of them are food manufacturing-related as follows: technology (processing and sequence of process operations), industrial hygiene (food safety management at the plant level and HACCP), and formulation (product development, interactions of food additives/ingredients with food matrix, and bioavailability). The sources of food raw materials and their quality are the issue of biosafety/biosecurity in the agricultural processing including postharvesting technologies and logistics. The fifth source of biohazards is the environment in the broadest sense, which includes pollution, climate changes, and anthropogenic environmental factors.

The major types of changes in foods are caused by the sources of undesirable contaminants. They can be instrumentally controlled; hence, they represent the primary targets for biosensors development and design. Indeed, the great challenge is to develop the real-time and online sensors and data systems suitable for surveying processes and products, controlling automated processes and the raw material stream, sensing the final products quality, typing the product labels with nutritional and health information, and much more. Today, the most important quality parameters and concepts in food production control are as follows:

- *Sensory:* appearance, flavor, taste, texture, and stability
- *Nutritional:* including health implications, such as "high in fiber," "low cholesterol," and "GMF free"
- *Composition and labeling*: additives lists as well as quality and ethical claims (e.g., ecological information)
- *Pollutants record*: environmental pollutants, veterinary drugs, agricultural chemicals, BSE-prions, and mycotoxins
- *Detection of foreign bodies*: such as stones, glass or metal fragments
- *Microbial safety*: in particular *Listeria, Salmonella, Campylobacter, Escherichia coli* and *Yersinia*
- *Shelf life*: microbial, sensory, chemical, sterility testing, and F_0-values
- *Production hygiene*: cleaning and decontamination;
- *HACCP*: traceability and authentication
- *Process parameters control*: machine settings, temperature, pressure, flow, aseptic conditions, and many others
- *Packaging*: integrity, pinholes, gas permeability, and migration control

BIOSENSORS: GENERAL FACTS

The potential susceptibility of the food supply chain to natural or intentional contamination could result in compromised safety and quality of foods. Nano-bio sensors and integrated microsystems could play a significant role of detecting deteriorative changes in food packaging. In modern food packaging development, appropriate sensing technologies are required to detect substances in parts per trillion for food safety, quality, and process control. The development of new sensing devices may be achieved by taking advantage of miniaturization of electronics and nano-bio materials. These novel sensing systems can be used to facilitate the online analysis of food stuffs.

Biosensor technology is a powerful alternative to conventional analytical techniques, harnessing the specificity and sensitivity of biological systems in small, low-cost devices. Despite the promising biosensors developed in research laboratories, there are not many reports of real applications in packaging. A sensor is the device that can detect a property or group of properties in a food product and respond to it by a signal, often an electric signal. This signal may provide direct information about the quality factor(s) measured or may have known relation to the quality factor. Usually, sensors are classified according to their mode of use (see Figure 1).

Biosensors usually are small, analytical bioelectronic devices that combine a transducer with a sensing biological component (biologically active substance). The transducer,

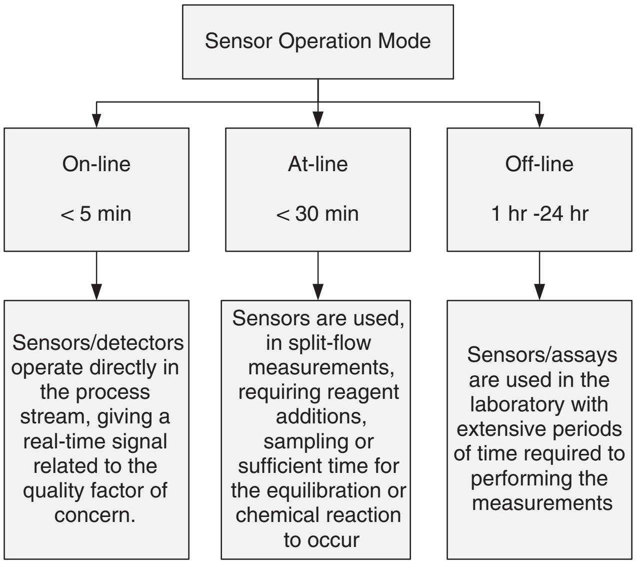

Sensors/detectors operate directly in the process stream, giving a real-time signal related to the quality factor of concern.

Sensors are used, in split-flow measurements, requiring reagent additions, sampling or sufficient time for the equilibration or chemical reaction to occur

Sensors/assays are used in the laboratory with extensive periods of time required to performing the measurements

Figure 1. Sensor operation modes.

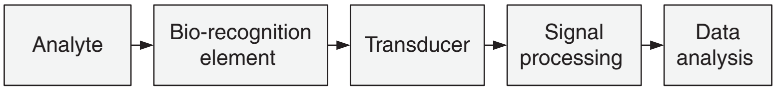

Figure 2. Schematics of biodetection process.

which is in intimate contact with the biologically sensitive material, can the measure weight, electrical charge, potential, current, temperature, or optical activity of the substance. The biologically active species include enzymes, multienzyme systems, antibodies or antigens, receptors, populations of bacterial or eukaryotic cells, or whole slices of mammalian or plant tissue. Substances such as sugars, amino acids, alcohols, lipids, nucleotides, and so on can be specifically identified and their concentration measured by these sensors. A schematic functional representation of a biosensor and the detection principle is depicted in Figure 2. The biosensor consists of a biological sensing element integrated with a signal transducer; together, they produce a reagent-free sensing system specific for the target analyte. The biological component of a biosensor used for the molecular detection is made of highly specialized macromolecules or complex systems with the appropriate selectivity and sensitivity. Biosensors can be classified according to the biocomponents used for the detection.

The biodetection principle can be schematically described as follows. A chemical, biological, or physical sensor produces a signal (e.g., voltage, absorbance rate, heat, or current) in response to a detectable event, such as binding between two molecules. In case of a biological or chemical sensor, this event typically involves a receptor (e.g., macrocyclic ligand, enzyme, or antibody) binding to a specific target molecule in a sample. Physical sensors, on the contrary, measure the inherent physical parameters of a sample, such as current or temperature, which can change because of reactions occurring in it. In any case, the signal is then transduced by passing it to a circuit where it is digitized. The obtained digital information can be stored in a memory, displayed on a monitor, or made accessible via digital communications port.

Because it is essential that the sensor's response be detected, it is necessary that an appropriate transduction mode for electrochemical signals, optical signals using changes in the fluorescence or absorbance rate of a sample, or plasmon resonance be available. With most sensors, transduction is accomplished electrochemically or optically.

The transducer transforms the physicochemical variations occurring in the biosensing element as the result of a positive detection event into an electric signal, which is then amplified by an ad hoc designed electronic circuit and used for the control of external devices. The transducers can be electrochemical (amperometric, potentiometric, and conductometric/impedimetric), optical, piezoelectric, or calorimetric. Often, this classification is used to identify the type of a biosensor (see Figure 3).

The bio-specific elements of the biosensor and transducer can be coupled together in one of the four possible ways (4), that are schematically shown in Figure 4: membrane entrapment, physical adsorption, matrix entrapment/porous encapsulation, and covalent bonding.

In the membrane entrapment scheme, a semipermeable membrane separates the analyte and the bio-element, and the sensor is attached to the bioelement [collagen

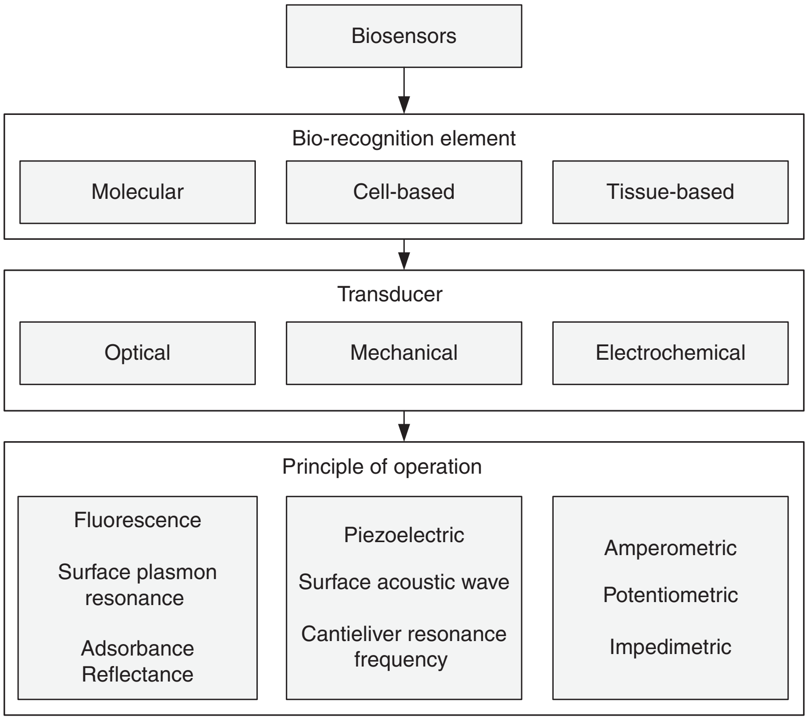

Figure 3. Biosensors classification.

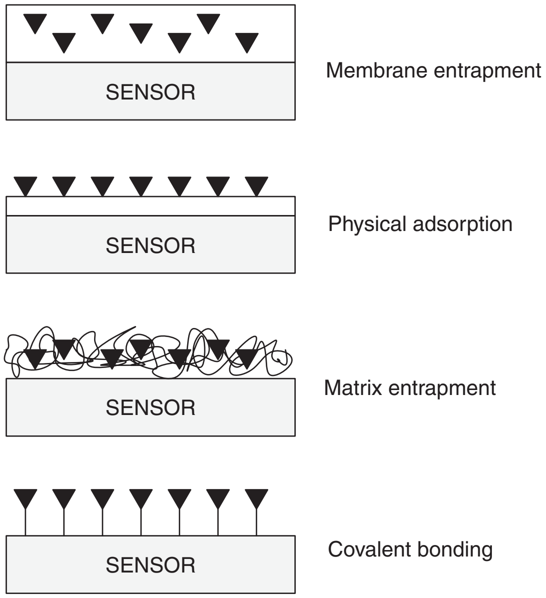

Figure 4. Coupling of biorecognition element (▼) with the transducer on a sensor substrate.

membranes, synthetic pre-activated membranes (5), and cellulose-acetate membranes]. The physical adsorption scheme depends on a combination of van der Waals forces, hydrophobic forces, hydrogen bonds, and ionic forces to attach the biomaterial to the sensor surface (6). The porous entrapment scheme is based on forming a porous encapsulation matrix around the biological material that helps in binding it to the sensor [nylon net (7), carbon paste (8), or graphite composites (9)]. In the case of covalent bonding, the sensor surface is treated as a reactive group to which the biological material can bind (10). One of the bioselective elements most frequently used in biosensors is an enzyme. These large protein molecules act as catalysts in chemical reactions but remain themselves unchanged at the end of reaction.

Mechanical (Resonant) Biosensors. In this type of biosensors, an acoustic wave transducer is coupled with an antibody (biosensitive element). When the analyte molecules (antigens) attach to the membrane (cantilever), the membrane mass changes, resulting in a subsequent change in the resonant frequency of the transducer (11). This frequency change is detected and measured (4).

Sensors Based on Electromagnetic Waves. Electromagnetic sensors may be classified by the wavelength of the electromagnetic waves they use: visible (VIS) (400–700 nm), ultraviolet (10–400 nm), infrared [700–30,000 nm: nearinfrared (NIR (12), FTIR (13), MRI (14)] waves, microwaves (15) (1–10 cm), radiofrequency (16) (1–10 m), and X-rays (17) ($100\,\mathrm{pm}^{-1}$ nm). Each sensor class may be subdivided even more according to the molecular information that can be obtained through the interaction. For instance, infrared sensors may be subdivided into near-infrared (700–2500 nm), mid-infrared (2500–30,000 nm), far-infrared (up to 1,000,000 nm), and thermography (1–15 μm) sensors, which all extract different information from the molecules (sample) interacting with the waves. We may also classify these sensors according to their precise type of interaction: absorbance, transmittance, or reflectance of light.

Sensors based on interactions with electromagnetic radiation waves have been on the market for many years, in particular for laboratory purposes. Online examples of such sensors are also numerous: X-rays used for foreign body detection (18), visible light sensors for color recognition or machine vision inspections (19), near-infrared sensors for quality inspection and temperature measurements (20), or microwave sensors for the detection of water content (21).

Optical Detection Biosensors. Strictly speaking, optical biosensors belong to the larger class of electromagnetic detectors, but because of their importance and broad use, they are usually considered as a separate group of biosensitive devices. The output signal measured in this type of biosensors is a light signal (22). These biosensors can be made based on optical diffraction or electrochemiluminescence (23).

Surface Plasmon Resonance (SPR). SPR is another optical phenomenon used in new sensors, often in those that involve antibodies or enzymes. The optical range used is most often in the visible part of the spectrum, but it may also be in the NIR range. Traditionally, SPR devices detect minute changes in the refractive index of the sensing surface and its immediate vicinity. They may detect these changes by a diffraction grating, with a prism on a glass slide, or through an optical waveguide carrying a thin metal layer (gold). The metal layer carries a sensitizing layer (e.g., immobilized antibodies or other molecules binding the analyte specifically; this layer is in contact with the sample). Inside the device, a collective excitement of electrons in the metal film occurs and leads at a specific wavelength to a total absorption of light at a particular angle of incidence. This angle depends on the refractive indices on either side of the metal film. Specific molecules binding to the sensitizing layer change the refractive index, which changes an angle of total absorption; this angle is measured and correlated to the concentration of the analyte.

The SPR detection technique has been used by Hellnaes (24) for online and at-line detection of veterinary drug residues (hormones and antibiotics) in dairies and slaughterhouses. Clenbuterol and ethinyl-estradiol in bovine urine, sulfamethazine (SMT), and sulfadiazine (SDZ) in porcine bile, as well as SMT, SDZ, and enrofloxacin in milk have been successfully detected by the technique. The developed biosensor operates in real time and can simultaneously detect up to 8 different veterinary drugs with a throughput of up to 600 samples per day. The project participants have established a new company to produce and develop the sensor systems, and several new and elegant designs of SPR sensors are now under study. The SPR sensor principle has also been used by Patel (25). The sensor developed as a result of this research has been applied to the quantification of mycotoxins, *Listeria,* and markers for growth hormones [recombinant bovine somatotrophin (rBST)].

Most current research is focused on the NIR/VIS sensors, SPR sensors and nuclear magnetic resonance (NMR) sensors (pulsed and low resolution); some work has also been done on fluorescence sensors, MIR and Raman sensors, Fourier Transform NIR sensors, thermography-based sensors, and sensors that combine two or more sensor principles.

Electrochemical Biosensors. Electrochemical biosensors are mainly used for the detection of hybridized DNA, DNA-binding drugs, glucose concentration, and so on. The underlying principle of these biosensors is that many chemical reactions produce or consume ions or electrons that in turn cause some changes in the electrical properties of the solution; these changes can be sensed out and measured (26). The electrochemical biosensor can be classified based on the measured electrical parameter as conductimetric, amperometric, or potentiometric (27).

Impedimetric/Conductometric Biosensors. Many biological processes involve changes in the concentrations of ionic species. Such changes can be used by biosensors, which detect changes in electrical conductivity. The measured parameter is the electrical conductance/resistance of the solution. When electrochemical reactions produce ions or electrons, the overall conductivity/resistivity of the solution changes (28). This change is measured and calibrated to a proper scale. Conductance measurements have relatively low sensitivity. The electric field is generated using sinusoidal voltage, which helps in minimizing undesirable effects such as Faradaic process, double-layer charging, and concentration polarization (29).

Impedimetric biosensors use changes in the electrical conductivity in the frequency domain (impedance) of a biological system for sensing and detection (6, 30, 31). Impedance spectroscopy provides a powerful tool for investigating a variety of bioelectric processes for both electrical and nonelectrical applications. In impedance spectroscopy, the current flowing through a sample cell that contains a nano-scale patterned bio-interface and the voltage across this cell are measured as a function of frequency (32–34). The design of impedimetric sensors is similar to conductivity-based sensors (26, 35–39). Enzyme/antibody immobilization on electrode surface makes these sensors highly selective and sensitive (40).

Amperometric Biosensors. This highly sensitive biosensor can detect electro-active species present in biological test samples. Enzyme-catalyzed redox reactions can form the basis of a major class of biosensors if the flux of redox electrons can be determined (41). Normally, a constant voltage is applied between two electrodes, and the current, which is caused by the electrode reaction, is determined. The first and simplest biosensor was based on this principle. It was for the determination of glucose and made use of the Clark oxygen electrode. In the case of amperometric biosensors, the measured parameter is an electric current. Some of the most recent applications of amperometric biosensors include glucose sensor for meat freshness (43); glucose sensor for use in fermentation systems (43); rapid cell number monitor (44); monitor for herbicides in surface waters (45, 46); amperometric enzyme-linked immunosorbent assay (ELISA) method based on the self enzyme amplification system (36); amperometric and novel fluorescent DNA probes (47).

Potentiometric Biosensors. In this type of sensors, the measured parameter is the oxidation/reduction potential of an electrochemical reaction (48). The simplest potentiometric technique is based on the concentration dependence of the potential, E, at reversible redox electrodes according to the Nernst equation (29) $E = E_0 + \frac{RT}{nF} \ln a_s$, where E_o is the standard redox potential, R is the gas constant, T is the absolute temperature, F is the Faraday constant, n is the number of exchanged electrons of the substance S, and a_s is the activity of the substance S. Changes in ionic concentrations are easily determined by use of ion-selective electrodes (48). This forms the basis of potentiometric biosensors (30). Many biocatalyzed reactions involve charged species each of which will absorb or release hydrogen ions according to their $\mathrm{pK_a}$ and the pH of the environment (49). This allows a relatively simple electronic transudction using the most common ion-selective electrode, which is the pH electrode (50).

Field Effect Transistors (FETs) and Ion-Selective Field Effect Transistors (ISFETs). Potentiometric biosensors can be miniaturized by the use of FET. ISFETs are low-cost devices that are in mass production (51). A recent development from ion-selective electrodes is the production of ISFETs and their biosensor use as enzyme-linked field effect transistors (ENFETs). Enzyme membranes are coated on, the ion-selective gates of these electronic devices, the biosensor responding to the electrical potential change via the current output. Thus, these are potentiometric devices, although they directly produce changes in the electric current. Reference shows a diagrammatic cross-section through an npn hydrogen ion responsive ISFET with a biocatalytic membrane. The buildup of positive charge on this surface (the gate) repels the positive holes in the p-type silicon causing a depletion layer and allowing the current to flow. In Abdelmalek et al. (52), Langmuir-Blodgett films that contain butyrylcholinestrase (BuChE) are fabricated to realize an ISFET for the detection of organophosphorus pesticides in water.

Cell-Based Biosensors. Cell-based biosensors have been implemented using micro-organisms, particularly for environmental monitoring of pollutants (53). Biosensors that incorporate mammalian cells have a distinct advantage of responding in a manner that can offer insight into the physiological effect of an analyte (54, 55). Several approaches for the transduction of cellular signals (56) are described in the literature: measures of cell metabolism, impedance (57), intracellular potentials, and extracellular potentials (58). Among these approaches, networks of excitable cells cultured on microelectrode arrays (53, 54, 59–61) are uniquely poised to provide rapid, functional classification of an analyte and ultimately constitute a potentially effective cell-based biosensor technology.

Keese and Giaever (62) have designed a biosensor that can be used to monitor cell morphology in tissue culture environment. The sensing principle used is known as electric cell-substrate impedance sensing (ECIS). In this process, a small gold electrode is immersed into the tissue culture medium. After cells attach and spread over the electrodes, the electric impedance measured across the electrode chamber changes. These changes in impedance can be used for understanding cell behavior in the culture medium. The attachment and spreading of the cells are important factors for successful use of this biosensor. Unfortunately, some types of cells, e.g., cancerous cells, can grow and reproduce freely in a medium without being attached to any substrate/surface, that makes them impossible to detect with these sensors.

Cornell et al. (63) proposed biosensor mimics biological sensory functions and can be used with most types of receptor, including antibodies and nucleotides. The technique is flexible and even in its simplest form it is sensitive to pico-molar concentrations of proteins.

Lab-on-a-Chip Systems and DNA Detection Devices. Significant advances have been made in the development of micro-scale technologies for biomedical and drug discovery applications. The first generation of microfluidics-based analytical devices [Lab-on-a-Chip (64)] have been designed and are already functional. Microfluidic devices offer unique advantages in sample handling (65–67), reagent mixing (68–70), separation (71–73), and detection (74). These devices include, but are not limited to are devices for cell sampling (75), cell trapping and cell sorting devices (59, 76–79), flow cytometers (67, 80, 81), devices for cell treatment: cell lysis, poration/gene transfection, and cell fusion devices (82).

Biosensors used for DNA detection are used to identify small concentrations of DNA (of micro-organisms such as viruses or bacteria) in a large sample. The detection relies on comparing sample DNA with a DNA of known micro-organism (probe DNA) (83). Because the sample solution may contain only a small number of micro-organism molecules, multiple copies of the sample DNA need to be created for proper analysis (84). This is achieved with an aid of the polymerase chain reaction (PCR). PCR starts by splitting the sample's double-helix DNA into two parts by heating it. If the reagents contain proper growth enzymes, then each of these strands would grow the complementary missing part and form the double-helix structure again. This happens after the temperature is lowered. Thus, in one heating/cooling cycle, the amount of sample DNA is doubled (85). In general, PCR is power consuming, so previously it was not possible to fabricate portable biodetectors that can perform PCR. But, using newly developed MEMS devices, such biodectors (also known as lab-on-a-chip systems) have been created. In these MEMS-based devices the amount of reagent used is scaled down (86).

DNA-Based Sensors/Assays. The general principle of DNA probe assay is similar to the immunoassay described in. Indeed, even the applications of DNA probes and monoclonal antibody immunoassay frequently overlap, thus establishing a "competition" between the two possible approaches.

One of the most important applications for DNA probes is the testing for virus infections (87). For probes of infectious disease, it is assumed that all strains can still contain a common DNA sequence region and thus be identified by a single probe. Recognized by the cell as a foreign body, viruses will induce an antigenic reaction causing antibody generation so they can also be detected in an immunoassay (88).

Another type of biosensor developed by the Naval Research Laboratory (85) uses magnetic field instead of optics or fluorescence. This sensor equipped with magnetic sensors and microbeads (89) can detect the presence and concentration of bioagents. The magnetic sensor (group of sensors) is coated with single-stranded DNA probes specific for a given bioagent or sample DNA. Once a single strand of DNA probe and a single strand of sample DNA find each other, they form a double-stranded (double-helix) structure, which in turn binds a single magnetic microbead. When a magnetic bead is present on a sensor surface, its resistance decreases, which can be detected and measured.

BIOSENSORS AND FOOD PACKAGING

Integrated Sensor-Packaging Systems

The basic function of sensors-packaging system is to monitor the package environment, product state/status, and perform data exchange with the external databases, providing information for decision making. Intelligent packaging is the integrated system of a complex structure with discrete/distributed sensor and data carrier elements. Technical realization of such a packaging system includes integration of sensitive elements into the packaging materials and/or labels, and integration of sensors' data into the intelligent packaging information flow, i.e., data layer. Such integration allows to perform online and "on-shelf" control of the internal and/or external package environments. Biosensors can be created by chemical modification and sensibilizing of packaging labels, embedding microdevices ("smart chips"), or depositing micro- and nano-sensitive elements into the label or the package itself. In the future, this system can be used to trigger the controllable release of bioactive components and targeted delivery of protective agents into the food product. One of the most important elements of the Internet Protocol (IP) concept is integration of sensors and detectors into the package itself. Examples of monitoring activities include visual observations/control and measurements of temperature, time, pH, and moisture levels. In the future, this system can be used to trigger the controllable release of bioactive components and the targeted delivery of protective agents into the food product.

Based on the type of the sensor and their location, it is possible to recognize three major types of sensor-packaging systems (see Figure 5):

- Off-package — remote sensing devices without requirements of direct contact with the package

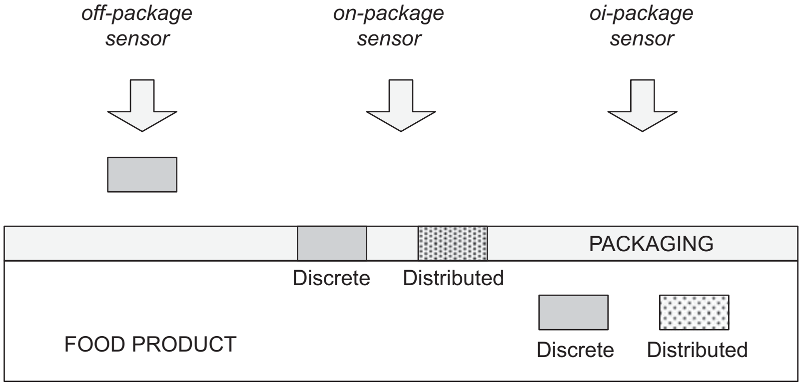

Figure 5. Sensor-packaging systems.

materials of packaging content, i.e., various spectroscopic devices (Raman, IR, NIR, and radiofrequensy).

- On-package — truly integrated devises that located on the packaging itself. RFID devices can be related to this category. Sensing packaging materials, which are sensors with distributed parameters, also belong to this type of sensors.
- In-package — sensing device is placed inside of the package. In some cases sensor can be part of the product formulation.

Integrated Sensor-Packaging Systems May Enhance Food Safety

Existing food distribution network includes producers, logistic operators, and processors. Timely detection of unsafe foods entering this network is the main issue that food safety system should address. The HACCP system, which has become the industrial standard for food safety management is designed to identify health hazards and to establish strategies and procedures to prevent, eliminate, or reduce their occurrence. Each stage of the food products flow is individually controlled, but there is no integrated food safety system that combines material and informational flows into one continuous food safety management process. There is a need to enhance the existing HACCP procedures by integration of material and information flows and to ensure early detection of deliberate food contamination at any point along the production pathway. In general the intelligent packaging framework is perfectly adapted to be used in the HACCP workflow and uses the principle of information system cyclic interactions with the environment (Figure 6).

The intelligent packaging framework enhances the existing HACCP system by incorporating its virtual data layer into the food safety management structure. Intelligent packaging can be integrated into the HACCP system as a data carrier, which delivers proper information about product history, establishes critical limits, and acts as a self-reporting data tag that creates natural link with an external knowledge base. Hence, the Critical Control Points that implement elements of an intelligent packaging will receive new functionality. Combining data of product properties and proper storage regimes with the

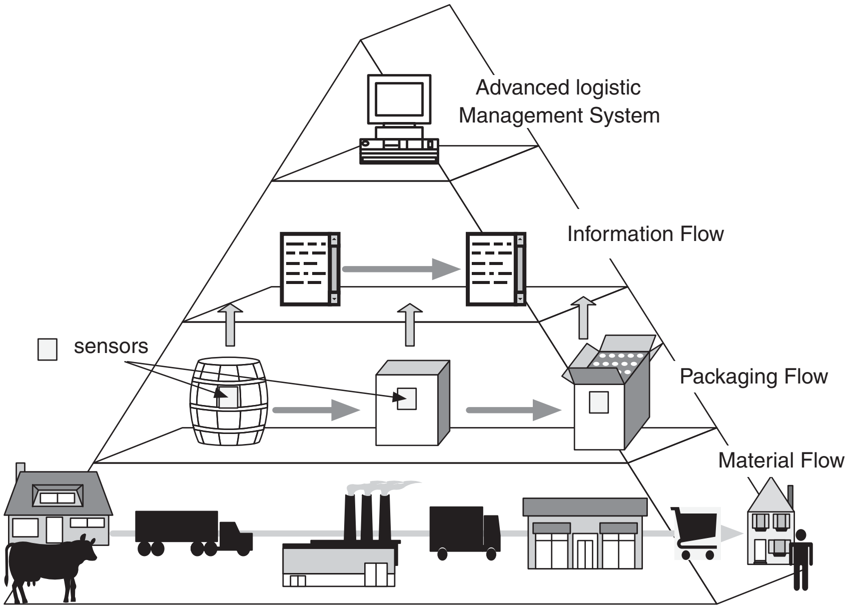

Figure 6. An integration of sensors into information/material flow in distribution network.

data generated by the packaging sensors, the IP system can direct the distribution/transportation network on proper operation sequence of product handling. In-time correction actions, continuous monitoring of product environment/quality, and record keeping are the main functionalities of the HACCP that can be realized within the intelligent packaging conceptual framework. Established critical limits can be stored in product labels. If progressive scan of sensors' data indicates the difference between established critical limits and current food product properties, then corrective actions will be performed. Intelligent packaging will be able to participate in these actions providing timely and sufficient information necessary for decision making.

An advanced food safety management system based on intelligent packaging will be able to correctly (a) identify potential hazards; (b) identify hazards which must be controlled; (c) conduct a biohazard analysis; (d) recommend controls, critical limits, and procedures for monitoring and verification; and (e) recommend appropriate corrective actions when a deviation occurs. This integrated food safety system combines data from multiple sensors (from different packages and/or products) and relates information about food environment and process conditions. Intelligent packaging is a unique entity that creates a dynamic link among the food product, environment, safety management system, and business operations. Its universality is determined by integration of information and data flows in one system.

APPLICATIONS OF BIOSENSORS IN FOOD SCIENCE AND FOOD PACKAGING

The need for fast, online, and accurate sensing, e.g., *in situ* analysis of pollutants in crops and soils, detection and identification of infectious diseases in crops and livestock, online measurements of important food processing parameters (90), monitoring animal fertility, and screening therapeutic drugs in veterinary testing are well described in another work (91).

Sensors for Pathogens Detection

The broad spectrum of foodborne infections keeps changing dramatically over time, as well-known pathogens have been controlled or eliminated, and the new ones have emerged. The burden of foodborne diseases remains substantial: One in four Americans is estimated to have a significant foodborne illness each year. Most of these illnesses are not caused by known pathogens, so more of them remain to be discovered. Among the known foodborne pathogens, the recently identified predominate, suggesting that as more and more is learned about pathogens, they would come under control. In addition to the emergence or recognition of new pathogens, other trends include global pandemics of some foodborne pathogens, the emergence of antimicrobial resistance, the identification of pathogens that are highly opportunistic and affect only the most high-risk subpopulations, and the increasing identification of large and dispersed outbreaks. New pathogens can emerge because of changing ecology or technology that connects potential pathogen with the food chain. They also can emerge by transferring the mobile virulence factors, often through bacteriophage (92).

Over the past decade, many improvements have been observed in both conventional and modern methods of pathogenic bacteria detection in foods (26). Modification and automation of conventional methods in food microbiology involve sample preparation, plating techniques, counting, and identification test kits. Adenosine triphosphate (ATP) bioluminescence techniques are increasingly used for measuring the efficacy of surfaces and utensils cleaning. Cell counting methods, including flow cytometry, and the direct epifluorescent filter technique are suitable for rapid detection of contaminating micro-organisms, especially in fluids. Automated systems based on impedance spectroscopy can screen high numbers of samples and make total bacterial counts within 1 day. Immunoassays in various formats make a rapid detection of as many pathogens as possible. Recently, there have been important developments in the nucleic acid-based assays and their application for the detection and subtyping of foodborne pathogens. The sensitivity of these methods has been significantly increased by employing the polymerase chain reaction and other amplification techniques. Alternative and rapid methods must meet several requirements concerning accuracy, validation, speed, automation, sample matrix, and so on. Both conventional and rapid methods are used in the frame of biohazard analysis critical control point programs. Additional improvements especially in immunoassays and genetic methods can be expected, including applications of biosensors and DNA chip technology (93).

In recent work by Bokken et al. (94), a surface plasmon resonance biosensor was used to detect *Salmonella* pathogen through antibodies reacting with *Salmonella* group A, B, D, and E (Kauffmann-White typing). In the assay designed, anti-*Salmonella* antibodies immobilized onto the biosensor surface were allowed to bind injected bacteria, followed by a pulse with soluble anti-*Salmonella* immunoglobulins to intensify the signal. No significant interference was found for mixtures of 30 non-*Salmonella* serovars at 109 CFU mL^{-1}. A total of 53 *Salmonella* serovars were successfully detected at 107 CFU mL^{-1}, except those from groups C, G, L, and P, as expected.

Another sensor technology recently developed uses a micro-electrophoretic system (mFFE) that separates and concentrates the analyte in question by several electrophoretic methods: preparative zone, interval zone, isotachophoresis, or isoelectric focusing. The mFFE system can be designed as a plain glass substrate 1.5 mm thick, and a cross-linked polydimethyl-siloxane (PDMS) top layer with micromachined sample channels. The central separation chamber ($12 \times 4 \times 0.15$ mm) is connected to 34 inlet channels for sample injection, and 36 outlet channels for sample collection. The detector unit can be based on several principles. In the case of *Listeria*, the detector unit may be a well-known ATP luminescence detector. For other analytes, the SPR detection system may be used with immobilized bio-specific layer, e.g., antibodies (95).

New ion-channel biosensor based on supported bilayer lipid membrane for direct and fast detection of *Campylobacter* species has been reported (96). The sensing element was composed of a stainless-steel working electrode, covered with an artificial bilayer lipid membrane (BLM). Antibodies to bacteria embedded into the BLM are used as channel-forming proteins. The biosensor has a strong signal amplification effect, which is defined as the total number of ions transported across the BLM. The biosensor has demonstrated a good sensitivity and selectivity to *Campylobacter* species.

A novel assay system for the detection of *E. coli* O157:H7 has been recently developed. The detection is based on the immunomagnetic separation of the target pathogen from a sample and absorbance measurements of p-nitrophenol at 400 nm from p-nitrophenyl phosphate hydrolysis by alkaline phosphatase (EC 3.1.3.1) on the "sandwich" structure complexes (antibodies coated onto micromagnetic beads – *E. coli* O157:H7-antibodies conjugated with the enzyme) formed on the microbead surface (97). The selectivity of the system has been examined, and no interference from other pathogens including *Salmonella typhimurium, Campylobacter jejuni*, and *Listeria monocytogenes* was observed. The sensor's working range is from 3.2×102 to 3.2×104 CFU/mL, with the relative standard deviation of 2.5–9.9%. The total detection time is less than 2 h.

An improved antibody-coated sensor system based on quartz crystal microbalance analysis of *Salmonella spp.* has been developed using thiolated antibody immobilization onto the gold electrode of the piezoelectric quartz crystal surface (98). The best results in sensitivity and stability were obtained with the thin layer of a thiol-cleavable, hetero-bifunctional cross-linker. The long bridge of this reagent can function as a spacer, facilitating antibody-*Salmonella* interaction on the gold electrode. The sensor's response was detected for the microbial suspension concentrations that ranged from 10^6 to 1.8×10^8 cfu/mL.

A label-free immunosensor for the detection of pathogenic bacteria using screen-printed gold electrodes (SPGEs) and a potassium hexacyanoferrate (II) redox probe has been reported by Susmel et al. (99). Gold electrodes were produced using screen printing, and the gold surfaces were modified by a thiol-based self-assembled monolayer (SAM) to facilitate antibody immobilization. In the presence of analyte, a change in the apparent diffusion coefficient of the redox probe was observed, that can be attributed to impedance of the diffusion of redox electrons to the electrode surface caused by the formation of the antibody–bacteria immunocomplexes. No change in the diffusion coefficient was observed when a nonspecific antibody [mouse immunoglobuline (IgG)] was immobilized and antigen added. The system has been demonstrated to work with *Listeria monocytogenes* and *Bacillus cereus*.

Sensors to Monitor Food Packaging and Shelf Life

In recent work by Yano et al. (100), a cell-based biosensor has been used to control meat freshness. Samples of fresh meat stored at 5°C were periodically removed from storage and washed with water for periods of up to 2 weeks. The water was then charged into a flow-injection analysis (FIA) system combined to the microbial sensor using yeast (*Trichosporon cutaneum*) as a sensitive element. This sensor has been specifically developed in this work for monitoring the freshness of meat. Relationships among the sensor signals obtained by the FIA system, the amounts of polyamines and amino acids produced from the meat, and the number of bacteria that had been multiplying in the meat during the aging process were investigated. The sensor response has been found to correspond to the increase in amino acid levels and viable counts in the meat during the first stage of aging. This is because amino acids produced initially by enzymes in the meat serve as a nutrition source for septic bacteria, and as a result, the amount of bacterial cells increases with increasing level of amino acids.

Foreign Body Detection. The presence of foreign bodies in processed food is of major concern to the producers. Mechanical separation techniques based on size and weight of different components have been used for many years to help finding foreign bodies in powdered and flowing products. Optical inspection techniques were able to extend the range of detectable foreign objects in free-flowing materials with regard to their shape and color. Metal detectors enabled metallic particles inside the product to be found. With recent achievements in sensor technologies advanced foreign body detection systems are becoming available (101).

The working principle and design of an ultrasonic transducer system with auto-alignment mechanism was first described by Zhao et al. (102). The proposed system has been used for detecting foreign bodies in beverage containers. Variations in reflection amplitude were analyzed as a function of the ultrasound beam incident angle to the beverage container surface. It has been concluded that a quadratic relationship exists between the strength of the reflected signal and the incident angle. Furthermore, a calculation for effective angular increment for searching the normal to a curved surface was introduced. Experiments conducted using the sensor prototype have demonstrated that foreign bodies are detectable in containers of various juices. This sensor design is also applicable to the non destructive inspection of canned food products for the foreign bodies presence.

Biosensors for Food Quality/Additives Control

Existing food packaging and packaging equipment may include microprocessors that are activated by electronic or biological sensors. Recent advances in electronic vision and computer technology have opened the research horizons for greater accuracy in process control, product sorting, and operation. The development of new sensors and instruments in this area is focused on measuring/evaluating the product internal and external quality and flavor (91).

The aim of food additives control and measurement is to develop, extend, and enhance the instrumental methods to improve consumer-perceived macroscopic quality factors. Several types of electronic sensors for quality assessment, grading, and sorting of food products have been investigated and described in literature.

A near infrared sensing technique can rapidly determine the sugar content of intact peaches. This technology has been extended to many other commodities, including testing avocados for oil content, and kiwifruits for starch and sugar content. The NMR method, for example, can be used for nondestructive detection and evaluation of internal product quality factors, such as the existence of bruises, dry regions or worm damage, stage of maturity, oil content, sugar content, tissue breakdown, and the presence of voids, seeds, and pits.

The machine vision for postharvest product sorting and grading is being investigated for several commodities. Recent research has included the development of a high-speed prune defect sorter, color and defect detector for fresh-market stone fruits, raisin grading, and flower grading machines. In this technology, electronic cameras are used for monitoring the product in various packing-line handling situations. Quality features are computed from digitized images, and the control system allows for product grading and sorting. The NIR/VIS region has been used in several different sensors. Thus, Crochon (103) has presented the design of a glove-shaped apparatus equipped with various miniaturized sensors providing information on fruit quality parameters, i.e., sugar content, maturity, mechanical properties (firmness and stiffness), and internal color. The sugar content and internal color were measured by a miniaturized spectrometer (NIR/VIS) coupled with optical fibers. A sound sensor evaluated the mechanical properties, and the size was measured by a potentiometer placed at the hand aperture. These sensors were coupled to a microcomputer that delivered processed information about the fruit overall quality grade, based on previously established variety and quality classes. The weight of the glove prototype was 400 g, and the electronic devices were held in a rucksack weighing 1000 g. The glove may be used before harvest to control the growth and to estimate the harvest date, at harvest to select fruits with specific qualities, or after harvest to control and measure the quality of the crop.

In Baendemaeker (104), chlorophyll fluorescence and reflectance in the NIR/VIS spectrum has been used for the mechanical quality factors assessment of green beans, broccoli, and carrots. Biosensors have been used for evaluation the effects of pasteurization on the vegetables quality by measuring the remaining enzymatic activity. Using MIR spectroscopy, as well as Raman scattering for online quality assessment in bakeries, breweries, dairies, and fruit farms has been reported (105).

Another method working in the NIR/VIS range, called time-resolved diffuse reflectance spectroscopy (TDRS) has been used to measure the internal quality of fruits and vegetables (106). The group has developed statistical models for the analysis of relationships between the TDRS signals and the firmness, sugar, and acid content of kiwifruit, tomato, apple, peach, nectarine, and melon. They have also developed the classification models to sort apples, peaches, kiwifruits and tomatoes into quality classes. Using a pulsed laser diode (70–200 ps/pulse), the single measurement time was about 100 ms. The absorption coefficient was related to the tissue constituents, whereas the scattering coefficient was related to the firmness and fiber content. A real-time sensors in the NIR/VIS range can be also used to measure product quality traits, such as maturity, flavor, or internal diseases and defects in potatoes, apples, and peaches (107).

Among the optical sensor systems developed and demonstrated in industrial environments are machine or artificial vision sensors. The system for olives sorting, using a traditional vision camera and three CCD color sensors for the shape, size, and color evaluation has been described (108). The new algorithm allowed the olives to be sorted into four classes with the speed of 132 olives/sec, and 6 images/sec.

The molecular imprinted polymers (MIP) technology is the new technology used for the development of biosensor substrates (109). The polymers are produced by imprinting the recognition sites of predetermined specificity into cross-linked synthetic polymers. The polymer is consequently able to selectively rebind the imprinted molecule (110). These sensor materials are called “artificial antibodies” (111). The MIP technology has particular strengths for small molecular analytes up to about 400 Dalton; it may be used to bind and detect many chemicals polluting food products, e.g., pesticides and veterinary drugs in meat and dairy products.

This technology has been successfully employed to develop and optimize plug-in detection cartridge supporting the molecularly imprinted polymer assay (112) for detection of different β-lactam antibiotics in milk. The sensor consists of a microfabricated column accommodating an optical detection window. Molecular imprinted polymers in the form of beads were used as packing materials and recognition elements; analyte binding was detected by the fluorescence. The same MIP technology has been used in several other studies, the overall objective of which was to develop novel and robust MIP-based technology that can be used in sensors for real-time measurements of food product contaminants (113–115). The results of the study indicate that MIP can be used to prepare both selective and general recognition matrices for either individual analytes or groups of compounds , with very good detection reproducibility and stability (115). SPR based sensor shows similar results for dairy product quality applications (116). The MIP developed for clenbuterol has been successfully applied in preparing a novel sensor comprising MIP as the selective element and amperometric detector as the transducer (109). The responses from several sensors were determined to have a variability of 10%. The feasibility for an oxacillin MIP-based sensor was also demonstrated.

At-line immunological sensors using amperometric detection of the resulting antibody-antigen complexes were described (117). The target quality factor assessed in this project was the presence of toxic chlorophenolic fungicides and their chloroanisole breakdown products in potable water, wine, and fruit juices. The electrochemical immunosensor uses monoclonal antibody preparations. The investigations of the effects of liquid food matrices on electrochemical transduction processes indicated that horseradish peroxidase is a suitable label for interrogation of the analyte–antibody immune complex, using amperometry and in-house fabricated screen-printed electrodes. The detection of hormonal substances for growth promotion, which is also based on immuno-sensors, has been recently reported by Guilbault (118). The sensor has to be used prior to slaughtering, and it can detect and measure testosterone, methyltestosterone, 19-nortestosterone, stanozolol, and trenbolone levels in biological fluids (blood). Analysis time achieved was about 30 min, compared with 24–36 h for tests used in laboratories today.

Biosensors for Sensory Evaluation of Food Products

“Electronic noses” (119, 120) and “electronic tongues” (121) are the common names of devices responding to the flavor/odor (volatiles) or taste (solubles) of a product using an array of simple and nonspecific sensors and the pattern-recognition software system (122). Historically, the sensors used were advanced mass spectrometers or gas/liquid chromatographs that produce unique fingerprint of the analyte. Nowadays, these sensors have been substituted by arrays of simple electric and/or frequency sensors, or sensors measuring changes in voltage or frequency as a response to the food contact.

Electronic noses and tongues are used in food production and quality control of different products, typically for laboratory tests or at-line control but may be further developed for in-line operation in the future. Testing times are often in the range of a few minutes, and the largest drawback of these devices is the lack of sensor stability. Examples of claimed successful applications include (123) the following:

- Discrimination between single volatile compounds
- Tracking of aroma evolution of ice-stored fish or meat
- Tracking of the evolution of cheese aroma during aging
- Classification of wines
- Determination of boar odor (androsterone) in pork fat
- Classification of peaches and other fruits
- Differentiation of spices by the area
- General raw materials control
- Testing of coffee, soft drinks, and whiskey
- Control of beer quality and faults

Essentially, each odor or taste leaves a characteristic pattern or fingerprint on the sensor array, and an artificial neural network is trained to distinguish and recognize these patterns (see Pattern recognition is gained by building a library of flavors from known flavor mixtures given to the network. Thus, e-noses and tongues are the devices intended to simulate human sensory response to a specific flavor, sourness, sweetness, saltiness, bitterness, and so on (123, 124).

The potentiometric chemical sensors such as ion selective sensors are most often used in the electronic noses. Considerable interest exists in the development of cheap, portable electronic noses to detect, online or at-line, the odor quality of many foods. For instance, olive oil producers would tremendously benefit from the possibility of detecting oil quality and shelf-life, and classifying the oils by their quality (e.g., extra virgin olive oil). This was the objective of a project in course of which scientists from olive producing countries have developed electronic noses especially for the olive production plants and tested them with great success (125).

In Dutta et al. (126), different tea samples were used to evaluate the applicability of electronic noses for sensory studies. A metal oxide sensor-based electronic nose has been used to analyze tea samples with different qualities, namely, drier month, drier month again overfired, well fermented normal fired in oven, well fermented overfired in oven, and under fermented normal fired in oven.

Electronic tongues are also widely used to assess the taste quality of various products. An electronic tongue based on voltammetry measurements, and a multichannel lipid membrane taste sensor based on potentiometry were compared using two aqueous solutions: detergent and tea (127). The electronic tongue consists of four electrodes made of different metals, a reference electrode, and a counter electrode. The measurement principle is based on pulse voltammetry technique in which an electric current is measured during the amplitude change of the applied potential. The taste sensor consists of eight different lipid/polymer membranes. The voltage difference between the electrodes and an Ag/AgCl reference electrode is measured when the current is close to zero. The multichannel electrochemical (potntiometric) sensors have demonstrated better sensitivity, faster dynamic response, but lower reproducibility of the results.

In study performed by Legin et al. (128) the electronic tongue based on a sensor array comprising 23 potentiometric cross-sensitive chemical detectors, and pattern recognition and multivariate calibration data processing tools has been applied to the analysis of Italian red wines.

Biosensors and Biosecurity

Food industry is one of the major potential targets for bioterrorism. The most damage can be attained through (a) final product contamination using either chemical or biological agents with an intent to kill or cause illness among consumers; (b) disruption of food distribution systems; and (c) damaging the food producing cycle by introducing devastating crop pathogens or exotic animal diseases such as foot-and-mouth disease, which could severely impact the food system.

Efforts to develop recognizing preparedness and response strategies for protecting the nation’s food supply pose substantial challenges for many reasons, including the following (129–131):

- The food system encompasses many different industries.
- A great variety of biological and chemical agents could potentially contaminate the food supply, and the possible scenarios for deliberate contamination are essentially limitless.

- The public health system is complex, and responsibilities for foodborne diseases prevention and control may overlap, or much worse, fall in the “gray area” between authorities of different agencies.

To achieve an adequate food supply chain and agricultural security, the improvement is needed in the activities on bioterrorism prevention, detection, and response. In addition, appropriate areas for applied research must be identified as follows:

- *Recognition of a foodborne bioterrorism attack*. This may be delayed because of background levels of foodborne diseases and potential wide distribution of the contaminated product or ingredient.
- *Rapid diagnostic methods* for identifying food-contaminating agents. They are not yet consistently available, and coordinated laboratory systems for pathogens detection are not fully operational.
- *Rapid trace-back procedures* for potentially contaminated products.

Biosensors and HACCP

Timely detection of unsafe foods is the main issue that the food-safety system should address, providing guidance for the design and integration of such system into the existing food safety management structures, i.e., HACCP. The preventive detection of the biohazard can be accomplished by direct measurements with the biosensors, or indirect detection by the process/environment monitoring and control. Such detection is based on the data from physical and chemical sensors, which are reliable and allow scale-down (meaning the possibility of easy integration into the existing information carriers). The HACCP system for food-safety management is designed to identify health hazards and to establish strategies to prevent, eliminate, or reduce their occurrence. An important purpose of corrective actions is to prevent potentially hazardous foods from reaching consumers. Where there is a deviation from the established critical limits, corrective actions are necessary. Therefore, corrective actions should include the following elements: (a) determine the disposition of non-compliant product, (b) determine and correct the cause of noncompliance, and (c) record the corrective actions that have been taken.

Currently, the use of HACCP is voluntary, but it is widely used in the food processing industry as a successful component of comprehensive food safety program. HACCP is a food safety management system in which food safety is addressed through the analysis and control of biological, chemical, and physical hazards from raw material production, procurement, and handling, to manufacturing, distribution, and consumption of the final product. The terms “HACCP” and “food safety” are used interchangeably in the food industry, implying that HACCP may be the only approach to achieving food safety. HACCP is designed for use in all segments of the food industry from growing, harvesting, processing, distributing, and merchandising, to preparing food for consumption (132).

However, there is a need for enhancement and integration of existing HACCP system into the total quality management system and food safety/biosecurity management on higher levels. This system currently includes the mechanisms to decrease the potential for contamination of or damage to the food supply from farm to table (i.e., prevention activities); systems to ensure early detection of deliberate food contamination at any point along the production pathway, including surveillance, rapid laboratory diagnostic and communication systems; and systems to ensure a rapid and thorough response if a bacterial contaminant is detected, including protection of workers and consumers (i.e., emergency response, control, trace-back, and mitigation activities).

The ultimate goal is the integration of sensors and sensor networks into the food-safety management structure. Such integration will allow to perform online and “on-shelf” control of the internal and/or external food product quality and package environment.

The integrated sensor information system combines data from multiple sensors (from different packages and/or products) and the information about environmental and process conditions to achieve highly specific information that cannot be obtained by using a single, independent microbiological assay. The emergence of new information carriers and advanced processing methods will make the food-safety management system increasingly dependable. A successful biohazard detection system should be able to (a) identify potential hazards; (b) identify hazards, which must be currently controlled; (c) conduct hazard analysis; (d) recommend control factors, critical limits, and procedures for hazard monitoring and verification; and (e) recommend appropriate corrective actions if a deviation occurs.

Based on a comprehensive model for multisensor data processing, developed by the U.S. Joint Directors of Laboratories (JDL) Data Fusion Group on Department of Defense (DoD) request (133), the integrated concept of multiple sensors data processing has been developed for the existing HACCP system of food safety monitoring and bio-hazard prevention. This model is specifically adapted to the HACCP workflow and uses the principle of information system cyclic interaction with the environment. The four major steps, including observation/ detection, hazard recognition, decision making and corrective actions strictly correspond to the seven HACCP principles. Integration of such system does not require the redesigning of existing manufacturing and control processes.

The new integrated sensors can monitor the HACCP control points with corresponding material packaging flow on a continuous basis or with predetermined monitoring frequency. Statistically designed data collection or sampling systems lend themselves to this purpose. Issues that need to be addressed when considering implementation of an integrated food safety monitoring system include where the system would be established; how it would be funded; how the data would be generated, analyzed, summarized, and disseminated; and how “snap surveys” could be used as a part of the system.

Microbiological tests are rarely effective for food safety monitoring because of their time-consuming properties and problems with assured detection of contaminants. Physical and chemical measurements are preferred because they are rapid and usually more effective for the control of microbiological hazards. For example, the safety of pasteurized milk is based on the measurements of heating time and temperature rather than on testing the processed milk for the absence of surviving pathogens.

To address the issues of connectivity between biosensor devices, the Connectivity Industry Consortium (CIC) has been formed to set up the standardized communication platform for all devices (134). The CIC has identified five requirements: bidirectionality, connection commonality, commercial software interoperability, security, and quality control and regulatory compliance (135). Under these standards, new devices should seamlessly link into the existing data management system without additional expenses.

Traditionally, food quality monitoring units consist of a sensor for the particular analyte, an electronic unit to convert the response into a digital signal, and a cable to communicate with the base station. Advances in technology now enable sensors to be integrated with the base station through wireless communication that frees sensors from being physically attached to it. An interest in such freestanding monitoring units is growing rapidly, because they offer the potential for developing integrated networks of sensing devices that can detect, diagnose, and monitor various food safety problems. The merging of computing with wireless communication systems and sensors has led to an increased accessibility to the real-time information in digital form. Because of achievements in communications and connectivity, data from these sensors can even now be easily accessed via personal digital assistants, personal computers, mobile phones, and networks. However, the communications network that has assembled over the past decade and continues to attract huge investments will fuel demands for more sources of health-related information and data.

New technologies do not come into existence easily. It is not just the matter of making conventional laboratory instruments smaller or putting a sensor into the human body. The new sensor devices and networks must satisfy food industry needs by delivering new benefits to users, offering new ways of monitoring food product properties/contaminations, developing tests that are cheaper, or creating devices that have significant advantages over those already available.

It has been predicted that the trend in biodetection systems development lies in the autonomous sensing technology with the next-generation handheld, portable sensing devices, "smart" sensing, and inline biodetection. The only limitation to the fast progress in this area is the fact that the sensors — especially chemical and biological ones — lag behind the electronics.

BIBLIOGRAPHY

1. M. H. Jansen-Vullers, C. A. van Dorp, and A. J. M. Beulens, "Managing Traceability Information In Manufacture," *Internat. J. Informat. Managem.* **23**, 395–413 (2003).
2. T. Moe, "Perspectives on Traceability in Food Manufacture," *Trends Food Scie. Technol*. **9**, 211–214 (1998).
3. A. Fox, "Report of the 'Bioterrorism Workshop'", Duke University Thomas Center on April 2-4, 2002. *J. Microbiologi. Methods* **51**, 247–254 (2002).
4. D. Jung, J. Cuttino, P. Pancrazio, T. Manos, R. Custer, L. Sathanoori, M. Coulombe, M. Czarnaski, D. Borkholder, G. Kovacs, P. Bey, D. Stenger, and J. Hickman, "Cell-Based Sensor Microelectrode Array Characterized by Imaging XPS, SEM, Impedance Spectroscopy, and Cellular Recordings," *J. Vac. Sci. Tech. A* **16**, 1183 (1998).
5. S. Myler, S. D. Collyer, K. A. Bridge, and S. P. J. Higson, "Ultra-Thin-Polysiloxane-Film-Composite Membranes for the Optimisation of Amperometric Oxidase Enzyme Electrodes," *Biosens. Bioelectro*. **17**, 35–43 (2002).
6. W. Gopel, and P. Heiduschka, "Interface Analysis in Biosensor Design," *Biosensors Bioelectron*. **10**, 853–883 (1995).
7. K. C. Gulla, M. D. Gouda, M. S. Thakur, and N. G. Karanth, "Reactivation of Immobilized Acetyl Cholinesterase in an Amperometric Biosensor for Organophosphorus Pesticide," *Biochim. Biophys. Acta—Protein Structure Molec. Enzymol*. **1597**, 133–139.
8. E. Cummings, P. Mailley, S. Linquette-Mailley, B. Eggins, E. McAdams, and S. McFadden, "Amperometric Carbon Paste Biosensor Based on Plant Tissue for the Determination of Total Flavanol Content in Beers," *Analyst* **123**, 1975–1980 (1998).
9. M. Albareda-Sirvent, A. Merkoci, and S. Alegret, "Thick-Film Biosensors for Pesticides Produced by Screen-Printing of Graphite-Epoxy Composite and Biocomposite Pastes," *Sens. Actuat. B: Chem*. **79**, 48–57 (2001).
10. C. Padeste, S. Kossek, and L. Tiefenauer, "Modular Amperometric Immunosensor Devices," 8th International Conference on Solid State Sensors and Actuators and Eurosensors IX, *Digest of Technical Papers* **2**, 2 (1995).
11. C. Grogan, R. Raiteri, G. M. O'Connor, T. J. Glynn, V. Cunningham, M. Kane, M. Charlton, and D. Leech, "Characterisation of an Antibody Coated Microcantilever as a Potential Immuno-Based Biosensor," *Biosensors and Bioelectronics* **17**, 201–207 (2002).
12. P. M. Mehl, Y.-R. Chen, M. S. Kim, and D. E. Chan, "Development of Hyperspectral Imaging Technique for the Detection of Apple Surface Defects and Contaminations," *J. Food Engineer.* **61**, 67–81 (2004).
13. D. M. Jenkins, and M. J. Delwiche, "Adaptation of a Manometric Biosensor to Measure Glucose and Lactose," *Biosens. Bioelectro*. **18**, 101–107 (2003).
14. A.-C. Hellgren, M. Wallin, P. K. Weissenborn, P. J. McDonald, P. M. Glover, and J. L. Keddie, "New Techniques for Determining the Extent of Crosslinking in Coatings," *Progress Organ. Coatings* **43**, 85–98 (2001).
15. B. Cunningham, B. Lin, J. Qiu, P. Li, J. Pepper, and B. Hugh, "A Plastic Colorimetric Resonant Optical Biosensor for Multiparallel Detection of Label-Free Biochemical Interactions," *Sens. Actuat. B: Chem.* **85**, 219–226 (2002).
16. H. Gulce, Y. S. Aktas, A. Gulce, and A. Yildiz, "Polyvinylferrocenium Immobilized Enzyme Electrode For Choline Analysis," *Enzyme Microbial Technol.* **32**, 895–899 (2003).
17. M. Z. Abdullah, L. C. Guan, K. C. Lim, and A. A. Karim, "The Applications of Computer Vision System and Tomographic Radar Imaging for Assessing Physical Properties of Food," *J. Food Engineer.* **61**, 125–135 (2004).

18. N. J. B. McFarlane, R. D. Speller, C. R. Bull, and R. D. Tillett, “Detection of Bone Fragments in Chicken Meat using X-ray Backscatter,” *Biosyst. Engineer.* **85**, 185–199 (2003).
19. T. Brosnan, and D.-W. Sun, “Improving Quality Inspection of Food Products by Computer Vision--A Review,” *J. Food Enginee*, **61**, 3–16 (2004).
20. S. Kawamura, M. Natsuga, K. Takekura, and K. Itoh, “Development of an Automatic Rice-Quality Inspection System,” *Comput. Electron. Agricult*. **40**, 115–126 (2003).
21. V. Bellon-Maurel, O. Orliac, and P. Christen, “Sensors and Measurements in Solid State Fermentation: A Review,” *Process Biochem*. **38**, 881–896 (2003).
22. A. Rand, J. Ye, C. Brown, and S. Letcher, “Optical Biosensors For Food Pathogen Detection,” *Food Technol*. **56**, 32–39 (2002).
23. Electrochemiluminescence. www.liv.ac.uk./Electrochemiluminescence/home1.htm.
24. K. Hellnaes, “FOODSENSE, The Use of Optical Biosensors for the Detection of Veterinary Drug Residues in Foods—A Demonstration Project,” National Food Administration, Chemistry Division III, 1998.
25. P. Patel, “Microsensor, Construction of Miniaturised Free Flow Electrophoresis (mFFE) Incorporating Dedicated Sensors for Real-Time Analysis of Food Contaminants,” Leatherhead Food International, 1999.
26. D. Ivnitski, H. Abdel, P. Atanasov, and E. Wilkins, “Biosensors for Detection of Pathogenic Bacteria,” *Biosens. Bioelectron.* **14**, 599–624 (1999).
27. R. S. Sethi, and C. R. Lowe, Presented at the IEEE Colloqium on Microsensors, 1990.
28. A. M. Gallardo Soto, S. A. Jaffari, and S. Bone, “Characterisation and Optimisation of AC Conductimetric Biosensors,” *Biosensors Bioelectron.* **16**, 23–29 (2001).
29. J. Bockris, and A. Reddy, *Modern Electrochemistry*, vol. 1. Plenum Press, New York, 1998.
30. L. Alfonta, A. Bardea, O. Khersonsky, E. Katz, and I. Willner, “Chronopotentiometry and Faradaic Impedance Spectroscopy as Signal Transduction Methods for the Biocatalytic Precipitation of an Insoluble Product on Electrode Supports: Routes for Enzyme Sensors, Immunosensors and DNA Sensors,” *Biosens. Bioelectron.* **16**, 675–687 (2001).
31. E. Hopirtean, F. Mihalcioiu, E. Forizs, and F. Kormos, “Impedance Spectroscopy on Non-Conventional Conductivity Cells,” *Sensors Actuat. B: Chem*. **19**, 389–391 (1994).
32. D. Allsopp, K. Milner, A. Brown, and W. Betts, “Impedance Technique for Measuring Dielectrophoretic Collection of Microbiological Particles,” *J. Phys. D* **32**, 1066–1074 (1999).
33. W. Arnold, Presented at the Conference on Electrical Insulation and Dielectric Phenomena, Piscataway, NJ, 2001.
34. C. M. Braun, A. Fujishima, and K. Honda, “Time Domain Spectroscopy: An Application to Electrochemistry,” *J. Phys. E* **19**, 374–377 (1986).
35. J. Gutierrez, L. Ares, M. C. Horillo, I. Sayago, J. Agapito, and L. Lopez, “Use of Complex Impedance Spectroscopy in Chemical Sensor Characterization,” *Sensors Actuat. B: Chemi*. **4**, 359–363 (1991).
36. E. J. Kim, Y. Yanagida, T. Haruyama, E. Kobatake, and M. Aizawa, “Immunosensing System for [Alpha]-Fetoprotein Coupled with a Disposable Amperometric Glucose Oxidase Sensor,” *Sensors Actuat B: Chemi.* **79**, 87–91 (2001).
37. I. Novotny, V. Breternitz, R. Ivanic, C. Knedlik, V. Tvarozek, L. Spiess, and V. Rehacek, Presented at the 44rd International Scientific Colloquium Technical University of Ilmenau, September 20–23, 1999.
38. B. Prasad, and R. Lai, “A Capacitive Immunosensor Measurement System with a Lock-In Amplifier and Potentiostatic Control By Software,” *Measurement Sci. Technol.* **10**, 1097–1104 (1999).
39. D. Satake, H. Ebi, N. Oku, K. Matsuda, H. Takao, M. Ashiki, and M. Ishida, “A Sensor for Blood Cell Counter using MEMS Technology,” *Sensors Actuat. B: Chemi*. **83**, 77–81 (2002).
40. E. Souteyrand, J. R. Martin, and C. Martelet, “Direct Detection Of Biomolecules By Electrochemical Impedance Measurements,” *Sensors Actuat. B: Chem*. **20**, 63–69 (1994).
41. G. Nagy, E. Gyurcsanyi Robert, A. Cristalli, R. Neuman Michael, and E. Lindner, “Screen-Printed Amperometric Microcell for Proline Iminopeptidase Enzyme Activity Assay,” *Biosens. Bioelectron*. **15**, 265–272 (2000).
42. J. Niu, and J. Y. Lee, “Bulk-Modified Amperometric Biosensors for Hypoxanthine Based on Sol-Gel Technique,” *Sensors Actuat. B: Chemi*. **62**, 190–198 (2000).
43. K. Schugerl, “Progress in Monitoring, Modeling and Control of Bioprocesses During the Last 20 Years,” *J. Biotechnol*. **85**, 149–173 (2001).
44. A. R. Boyd, T. S. Gunasekera, P. V. Attfield, K. Simic, S. F. Vincent, and D. A. Veal, “A Flow-Cytometric Method for Determination of Yeast Viability and Cell Number in a Brewery,” *FEMS Yeast Res.* **3**, 11–16 (2003).
45. L. Campanella, F. Cubadda, M. P. Sammartino, and A. Saoncella, “An Algal Biosensor for the Monitoring of Water Toxicity in Estuarine Environments,” *Water Res.* **35**, 69–76 (2001).
46. S. Kroger, S. Piletsky, and A. P. F. Turner, “Biosensors For Marine Pollution Research, Monitoring and Control,” *Marine Pollution Bull*. **45**, 24–34 (2002).
47. C. H. Zhai Junhui, and Y. Ruifu, “DNA Based Biosensors,” *Biotechno. Adv.* **15**, 43–58 (1997).
48. A. Bard, and L. Faulkner, *Electrochemical methods*. John Wiley & Sons, New York, 1980.
49. P. Leonard, S. Hearty, J. Brennan, L. Dunne, J. Quinn, T. Chakraborty, and R. O’Kennedy, “Advances in Biosensors for Detection of Pathogens in Food and Water,” *Enzyme Microbial Technol*. **32**, 3–13 (2003).
50. V. Rumenjak, I. Kruhak, and S. Milardovic, “A Simple and Inexpensive Multichannel Potentiometric Blood Analyzer for Single and Nonroutine Measurements of Electrolyte Concentrations,” *Lab Robot. Automat.* **10**, 205–213.
51. M. Yuqing, G. Jianguo, and C. Jianrong, “Ion Sensitive Field Effect Transducer-Based Biosensors,” *Biotechno. Adva.* **21**, 527–534 (2001).
52. F. Abdelmalek, M. Shadaram, and H. Boushriha, “Ellipsometry Measurements and Impedance Spectroscopy on Langmuir-Blodgett Membranes on Si/SiO2 for Ion Sensitive Sensor,” *Sens. Actuat. B: Chem.* **72**, 208–213 (2001).
53. J. J. Pancrazio, J. P. Whelan, D. A. Borkholder, W. Ma, and D. A. Stenger, “Development and Application of Cell-Based Biosensors,” *Annals Biomed. Engineer.* **27**, 697–711 (1999).
54. P. Connolly, G. Moores, W. Monaghan, J. Shen, S. Britland, and P. Clark, “Microelectronic and Nanoelectronic Interfacing Techniques for Biological Systems,” *Sens. Actuat. B: Chem*. **6**, 113–121 (1992).
55. L. H. Hansen, and S. J. Sørensen, The Use of Whole-Cell Biosensors to Detect and Quantify Compounds or Conditions Affecting Biological Systems. Microbial Ecology, Springer-Verlag New York, 2001.

56. T. Haruyama, “Micro- and Nanobiotechnology for Biosensing Cellular Responses,” *Adv. Drug Del. Rev.* **55**, 393–401 (2003).
57. J. Suehiro, D. Noutomi, R. Hamada, and M. Hara, Presented at the 36th IAS Annual Meeting, Piscataway, NJ, 2001.
58. Y. Huang, N. S. Sekhon, J. Borninski, N. Chen, and B. Rubinsky, “Instantaneous, Quantitative Single-Cell Viability Assessment by Electrical Evaluation of Cell Membrane Integrity with Microfabricated Devices,” *Sens. Actua. A: Physi.* **105**, 31–39 (2003).
59. W. M. Arnold, “Positioning, Levitation and Separation of Biological Cells,” *Electrostatics* 63–68 (1999).
60. U. Evans, P. Colavita, M. Doescher, M. Schiza, and M. Myrick, “Construction and Characterization of a Nanowell Electrode Array,” *Nano Letters* **2**, 641–645 (2002).
61. D. J. Nagel, “Microsensor Clusters,” *Microelectron. J.* **33**, 107–119 (2002).
62. C. Keese, and I. Giaever, “A Biosensor that Monitors Cell Morphology with Electric Fields,” *IEEE Engineer. Medi. Biol.* 435–445 (1994).
63. B. A. Cornell, V. L. B. Braach Maksvytis, L. G. King, P. D. J. Osman, B. Raguse, L. Wieczorek, and R. J. Pace, “A Biosensor that Uses Ion-Channel Switches,” *Nature* **387**, 580–3 (1997).
64. B. H. Weigl, R. L. Bardell, and C. R. Cabrera, “Lab-on-a-Chip for Drug Development,” *Adv. Drug Del. Rev.* **55**, 349–377 (2003).
65. T. Footz, S. Wunsam, S. Kulak, H. J. Crabtree, D. M. Glerum, and J. Backhouse Christopher, Sample purification on a microfluidic device. *Electrophoresis* **22**, 3868–3875 (2001).
66. K. Handique, D. T. Burke, C. H. Mastrangelo, and M. A. Burns, “Nanoliter-Volume Discrete Drop Injection and Pumping in Microfabricated Chemical Analysis Systems,” Technical Digest. Solid State Sensor and Actuator Workshop. *Transducer Res. Found*, Cleveland, OH, 1998, pp. 346–349.
67. B. H. Weigl, R. L. Bardell, N. Kesler, and C. J. Morris, “Lab-on-a-Chip Sample Preparation using Laminar Fluid Diffusion Interfaces-Computational Fluid Dynamics Model Results and Fluidic Verification Experiments,” *Fresenius’ J. Analyt. Chem.* **371**, 97–105.
68. G. Bruin, “Recent Developments in Electrokinetically Driven Analysis on Microfabricated Devices,” *Electrophoresis* **21**, 3931–3951 (2000).
69. C. Jin Woo, and C. A. Ahn, “An Active Micro Mixer Using Electrohydrodynamic (EHD) Convection [for Microfluidic-Based Biochemical Analysis],” Technical Digest. *Solid State Sensor and Actuator Workshop* **0001**, 52–55 (2000).
70. J. Voldman, M. L. Gray, and M. A. Schmidt, “An Integrated Liquid Mixer/Valve,” *J. Microelectromech. Syst.* **9**, 295–302 (2000).
71. J. W. Grate, O. B. Egorov, and C. Bruckner Lea, “Sequential Injection Separation and Sensing,” *Proceedings of the SPIE The International Society for Optical Engineering* **3857**, 70–73 (1999).
72. J. Lichtenberg, N. F. de Rooij, and E. Verpoorte, “Sample Pretreatment On Microfabricated Devices,” *Talanta* **56**, 233–266 (2002).
73. A. R. Minalla, and L. Bousse, “Characterization of Microchip Separations,” *Proceedings of the SPIE The International Society for Optical Engineering* **4177**, 134–141 (2000).
74. H.-C. Chang, D. Leighton, A. Miller, A. Ostafin, and P. Takhistov, Presented at the AICHE, Los Angeles, CA, 2000.
75. H. Andersson, and A. van den Berg, “Microfluidic Devices for Cellomics: A Review,” *Sens. Actuato. B: Chemi.* **92**, 315–325 (2003).
76. O. Bakajin, R. Carlson, C. F. Chou, S. S. Chan, C. Gabel, J. Knight, T. Cox, and R. H. Austin, Sizing, Fractionation and Mixing of Biological Objects Via Microfabricated Devices,” Technical Digest. Solid State Sensor and Actuator Workshop, *Transducer Res. Found*. Cleveland, OH, 1998 pp. 116-119.
77. D. Beysens, G. Forgacs, and J. A. Glazier, “Cell Sorting is Analogous to Phase Ordering in Fluids,” *Proc. Natl. Acad. Sci. USA* 9467–9471 (2000).
78. S. Fiedler, S.-G. Shirley, and T. Schnelle, “Dielectrophoretic Sorting of Particles and Cells in a Microsystem,” *Analyt. Chem.* **70**, 1909–1915 (1998).
79. E. Zubritsky, “Sorting Cells,” *Analyt. Chem.* **71** (1999).
80. S. Gawad, M. Henschkel, Y. Leung Ki, R. Iuzzolino, L. Schild, P. Lerch, and P. Renaud, “Fabrication Of A Microfluidic Cell Analyzer In A Microchannel Using Impedance Spectroscopy,” *1st Annual International IEEE EMBS Special Topic Conference on Microtechnologies in Medicine and Biology Proceedings*, 2000, pp. 297–301.
81. G. Nebe-von-Caron, P. Stephens, and A. Badley, “Bacterial Detection and Differentiation by Cytometry and Fluorescent Probes,” *Proceedings RMS* **34/1**, 321–327 (1999).
82. C. Wouters Patrick, P. Bos Ad, and J. Ueckert, “Membrane Permeabilization in Relation to Inactivation Kinetics of Lactobacillus Species Due to Pulsed Electric Fields,” *Applied Environmen. Microbiol.* **67**, 3092–3101 (2001).
83. J. Cheng, L. Sheldon Edward, L. Wu, A. Uribe, O. Gerrue Louis, J. Carrino, J. Heller Michael, and O. C. J. P, “Preparation and Hybridization Analysis of DNA/RNA from E. coli on Microfabricated Bioelectronic Chips,” *Nature Biotechnol.* **16**, 541–546 (1998).
84. M. Collasius, D. Hauffe, A. Dusterhoft, H. Hilbert, and R. Himmelreich, “The Biorobot 96oo Automates Front-End Procedures of High-Throughput DNA Sequencing Projects,” *Laboratory Robot. Automa.* **11**, 316–319 (1999).
85. C. Aston, “Biological Warfare Canaries,” *IEEE Spectrum* (Oct 2001).
86. K. Peterson, Presented at the Electron devices meeting, 1996.
87. B. Meric, K. Kerman, D. Ozkan, P. Kara, S. Erensoy, U.S. Akarca, M. Mascini, and M. Ozsoz, “Electrochemical DNA Biosensor for the Detection of TT and Hepatitis B Virus from PCR Amplified Real Samples by using Methylene Blue,” *Talanta* **56**, 837–846 (2002).
88. S. S. Iqbal, M. W. Mayo, J. G. Bruno, B. V. Bronk, C. A. Batt, and J. P. Chambers, “A Review of Molecular Recognition Technologies for Detection of Biological Threat Agents,” *Biosens. Bioelectron.* **15**, 549–578 (2000).
89. Y. Takeuchi, “Magnetic Microparticles as Labeling or Contrast Medium for Medical Imaging, An In-Vitro Feasibility Study,” 1807–1810 (1998).
90. T. A. Haley, and S. J. Mulvaney, “Advanced Process Control Techniques for the Food Industry,” *Trends Food Sci. Technolo.* **6**, 103–110 (1995).
91. M. N. Velasco-Garcia, and T. Mottram, “Biosensor Technology Addressing Agricultural Problems,” *Biosys. Engineer.* **84**, 1–12 (2003).
92. R. V. Tauxe, “Emerging Foodborne Pathogens,” *Internat. J. Food Microbiol.* **78**, 31–41 (2002).
93. E. de Boer, and R. R. Beumer, “Methodology for Detection and Typing of Foodborne Microorganisms,” *Internat. J. Food Microbiol.* **50**, 119–130 (1999).
94. G. C. A. M. Bokken, R. J. Corbee, F. van Knapen, and A. A. Bergwerff, “Immunochemical Detection of Salmonella Group

B, D and E Using an Optical Surface Plasmon Resonance Biosensor," *FEMS Microbiol. Lett.* **222**, 75–82 (2003).

95. P. Patel, "Biosensors for Measurement of Analytes Implicated in Food Safety: A Review," *Trends Analyt. Chemi.* **21**, 96–116 (2000).
96. D. Ivnitski, E. Wilkins, H. T. Tien, and A. Ottova, "Electrochemical Biosensor Based on Supported Planar Lipid Bilayers for Fast Detection of Pathogenic Bacteria," *Electroche. Communicat.* **2**, 457–460 (2000).
97. Y. Liu, and Y. Li, "Detection of *Escherichia coli* O157:H7 Using Immunomagnetic Separation and Absorbance Measurement," *J. Microbiol. Methods* **51**, 369–377 (2002).
98. I.-S. Park, and N. Kim, "Thiolated Salmonella Antibody Immobilization onto the Gold Surface of Piezoelectric Quartz Crystal," *Biosensors Bioelectron.* **13**, 1091–1097 (1998).
99. S. Susmel, G. G. Guilbault, and C. K. O'Sullivan, "Demonstration of Labeless Detection of Food Pathogens Using Electrochemical Redox Probe and Screen Printed Gold Electrodes," *Biosensors Bioelectro.* **18**, 881–889 (2003).
100. Y. Yano, M. Numata, H. Hachiya, S. Ito, T. Masadome, S. Ohkubo, Y. Asano, and T. Imato, "Application of a Microbial Sensor to the Quality Control of Meat Freshness," *Talanta* **54**, 255–262 (2001).
101. M. Graves, A. Smith, and B. Batchelor, "Approaches to Foreign Body Detection in Foods," *Trends Food Sci. Technol.* **9**, 21–27 (1998).
102. B. Zhao, O. A. Basir, and G. S. Mittal, "A Self-Aligning Ultrasound Sensor for Detecting Foreign Bodies in Glass Containers," *Ultrasonics* **41**, 217–222 (2003).
103. M. Crochon, *GLOVE, Development of an Instrumented Glove to Assist the Quality Control and the Picker in Selecting Fruits According to their Maturity.* Cemagref-Itap, 1997.
104. J. Baerdemaeker, OPTIVEG, Online Optical Measurements as a Basis for Control During Mild Heat Processing of Vegetables, Katholieke Universiteit Leuven, Department Agrotechniek en Economie, 1998.
105. P. Grenier, "STAS, The Development of Spectroscopic Techniques as Advanced Sensors for the Optimisation and Control of Food and Paper Processing," Cemagref, 1996.
106. C. Zarotti, "DIFFRUIT, Diffuse Reflectance Spectroscopy for the Evaluation of Fruit and Vegetable Internal Quality," Vela Srl, 1996.
107. R. Chalucova, *NIQAT, Non-Destructive NIR Technology for Fruit and Vegetable Internal Quality Assessment, Eliminating the Skin Disturbing Effect*, Institute for Horticulture and Canned Foods, Plovdiv, Bulgaria, 2000.
108. R. Pujol, "Nipco, New Image Processing for Characterisation of Olives and Other Fruits," Instituto Tecnologico Agroalimentario, 1997.
109. A. Merkoci, and S. Alegret, "New Materials for Electrochemical Sensing IV," Molecular Imprinted Polymers, *Trends Analyt. Chemi.* **21**, 717–725 (2002).
110. K. Mosbach, and O. Ramstrom, "The Emerging Technique of Molecular Imprinting and Its Future Impact on Biotechnology," *BioTechnology* **14**, 163–170 (1996).
111. F. W. Scheller, U. Wollenberger, A. Warsinke, and F. Lisdat, "Research and Development in Biosensors," *Curr. Opin. Biotechnol.* **12**, 35–40 (2001).
112. M. Kempe, "CREAM, Cartridges with Molecularly Imprinted Recognition Elements for Antibiotic Residue Monitoring in Milk," Lunds Universitet, Centre for Chemistry and Chemical Engineering, 1999.
113. P. Patel, "Development of Novel and Robust Molecular Imprint-Based Technology for the Real-Time Analysis of Food Contaminants and Components," Leatherhead Food International, 1996.
114. P. D. Patel, "(Bio)Sensors for Measurement of Analytes Implicated in Food Safety: A Review, *Trends in Analytical Chem.* **21**, 96–115 (2002).
115. I. E. Tothill, "Biosensors Developments and Potential Applications in the Agricultural Diagnosis Sector," *Comput. Electron. Agricult.* **30**, 205–218 (2001).
116. V. Gaudin, J. Fontaine, and P. Maris, "Screening of Penicillin Residues in Milk by a Surface Plasmon Resonance-Based Biosensor Assay: Comparison of Chemical and Enzymatic Sample Pre-Treatment," *Analyt. Chim. Acta* **436**, 191–198 (2001).
117. S. Setford, "FOODSAFE, Rapid Assessment of Food Safety Via Novel At-Line Measurements," Cranfield University, 2000.
118. G. Guilbault, "RADAR, Development of Single and Muti-Analyte Affinity Sensors for Rapid Detection of Androgen Residues in Live and Post-Mortem Animals," University College Cork, Treland, 2001.
119. M. V. Voinova, M. Jonson, and B. Kasemo, "Missing Mass" Effect in Biosensor's QCM Applications," *Biosensors Bioelectron.* **17**, 835–841 (2002).
120. T.-Z. Wu, "A Piezoelectric Biosensor as an Olfactory Receptor for Odour Detection: Electronic Nose," *Biosensors Bioelectron.* **14**, 9–18 (1999).
121. W. A. Collier, D. B. Baird, Z. A. Park-Ng, N. More, and A. L. Hart, "Discrimination Among Milks and Cultured Dairy Products Using Screen-Printed Electrochemical Arrays and an Electronic Nose," *Sens. Actuat. B: Chem.* **92**, 232–239 (2003).
122. G. Gholmieh, W. Soussou, S. Courellis, V. Marmarelis, T. Berger, and M. Baudry, "A Biosensor For Detecting Changes in Cognitive Processing Based on Nonlinear Systems Analysis," *Biosensors Bioelectron.* **16**, 491–501 (2001).
123. P. Barlett, J. Elliott, and J. Gardner, "Electronic Noses and Their Application in the Food Industry," *Food Technol.* **51**, 44–48 (1997).
124. T. Tan, V. Schmitt, and S. Isz, "Electronic Tongue: A New Dimension in Sensory Analysis," *Food Technol.* **55**, 44–50 (2001).
125. B. Chafer, "Assessment of Olfactory Characteristics of Olive Oil by Electronic Sensing," *Oleicola El tejar Nuestra Senora de Araceli Sci* (1998).
126. R. Dutta, K. R. Kashwan, M. Bhuyan, E. L. Hines, and J. W. Gardner, "Electronic Nose Based Tea Quality Standardization," *Neural Networks* **16**, 847–853 (2003).
127. P. Ivarsson, Y. Kikkawa, F. Winquist, C. Krantz-Rulcker, N.-E. Hojer, K. Hayashi, K. Toko, and I. Lundstrom, "Comparison of a Voltammetric Electronic Tongue and a Lipid Membrane Taste Sensor," *Analyt. Chim. Acta* **449**, 59–68 (2001).
128. A. Legin, A. Rudnitskaya, L. Lvova, Y. Vlasov, C. Di Natale, and A. D'Amico, "Evaluation of Italian Wine by the Electronic Tongue: Recognition, Quantitative Analysis and Correlation with Human Sensory Perception," *Analy. Chim. Acta* **484**, 33–44 (2003).
129. D. A. Hennessy, J. Roosen, and H. H. Jensen, "Systemic Failure in the Provision of Safe Food," *Food Policy* **28**, 77–96 (2003).
130. J. Sobal, L. Kettel Khan, and C. Bisogni, "A Conceptual Model of the Food and Nutrition System," *Social Scie. Medi.* **47**, 853–863 (1998).

131. P. Willquist, and M. Torner, “Identifying and Analysing Hazards in Manufacturing Industry--A Review of Selected Methods and Development of a Framework for Method Applicability,” *Internat. J. Industr. Ergonom*. **32**, 165–180 (2003).

132. E. C. D. Todd, “Microbiological Safety Standards and Public Health Goals to Reduce Foodborne Disease,” *Meat Sci*. **66**, 33–43 (2004).

133. D. Hall, and J. Llinas, *Handbook of Multisensor Data Fusion*. CRC Press, New York, 2001.

134. CIC 2000, posting date. Connectivity Industry Consortium. http://www.poccic.org/index.shtml.

135. A. Reder, *Regulating the Point of Care: The IVD Connectivity Industry Consortium*, Medical Device & Diagnostic Industry, 2001.

General References

E. C. Alocilja, and S. M. Radke, Market Analysis of Biosensors for Food Safety. *Biosens. Bioelectron*. **18**, 841–846 (2003).

I. Brigger, C. Dubernet, and P. Couvreur, “Nanoparticles in Cancer Therapy and Diagnosis,” *Adv. Drug Deli. Rev.* **54**, 631–651 (2002).

O. Cohen-Haguenauer, “Safety and Regulation at the Leading Edge of Biomedical Biotechnology,” *Curr. Opin. Biotechnol*. **7**, 265–272 (1996).

G. De Gasperis, Y. Jun, F. F. Becker, P. R. C. Gascoyne, and W. Xiao Bo, “Microfluidic Cell Separation by 2-Dimensional Dielectrophoresis,” *Biomed. Microdev.* **2**, 41–49 (1999).

D. Ellis, and R. Goodacre, “Rapid and Quantitative Detection of the Microbial Spoilage of Muscle Foods: Current Status and Future Trends,” *Trends Food Sci. Technol.* **12**, 414–424 (2001).

R. Gomez, R. Bashir, and A. K. Bhunia, “Microscale Electronic Detection of Bacterial Metabolism,” *Sensors Actuat. B: Chem.* **86**, 198–208 (2002).

D. Grainger, “Biomedical Micro- and Nano-Technology,” *Adva. Drug Deli. Rev.* **55**, 311–313 (2003).

R. H. Hall, “Biosensor Technologies for Detecting Microbiological Foodborne Hazards,” *Microbes Infect*. **4**, 425–432 (2002).

W. Laureyn, D. Nelis, P. Van Gerwen, K. Baert, L. Hermans, R. Magnee, J.-J. Pireaux, and G. Maes, “Nanoscaled Interdigitated Titanium Electrodes for Impedimetric Biosensing,” *Sensors Actuat. B: Chem.* **68**, 360–370 (2000).

R. J. Lifset, “The Politics of Risk Assessment: Regulation of Deliberate Release of Genetically Engineered Microorganisms,” *Technol. Society* **8**, 299–318 (1986).

G. Lillie, P. Payne, and P. Vadgama, “Electrochemical Impedance Spectroscopy as a Platform for Reagentless Bioaffinity Sensing,” *Sensors Actuat B: (Chem.)* **B78**, 249–256 (2001).

R. E. Mandrell, and M. R. Wachtel, “Novel Detection Techniques for Human Pathogens that Contaminate Poultry,” *Curr. Opin. Biotechnol*. **10**, 273–278 (1999).

M. Mrksich, “What can Surface Chemistry do for Cell Biology?” *Curr. Opin. Chemi. Biol*. **6**, 794-797 (2002).

G. Ponchel, and J.-M. Irache, “Specific and Non-Specific Bioadhesive Particulate Systems for Oral Delivery to the Gastrointestinal Tract,” *Adva. Drug Del. Revi*. **34**, 191–219 (1998).

M. E. Tess, and J. A. Cox, “Chemical and Biochemical Sensors Based on Advances in Materials Chemistry,” *J. Pharmaceuti. Biomed. Anal.* **19**, 55–68 (1999).

T. Ujiie, A. Yamazaki, M. Watanabe, T. Okuda, T. Ichiki, and Y. Horiike, “Microfabricated Separator And Manipulator Of Blood Cells For Health Care Devices,” *Digest Papers Microprocess. Nanotechnol.* 28–29 (2000).

C. D. W. Wilkinson, M. Riehle, M. Wood, J. Gallagher, and A. S. G. Curtis, “The Use of Materials Patterned on a Nano- and Micro-Metric Scale in Cellular Engineering,” *Materials Sci. Engineer: C* **19**, 263–269 (2002).

BLOW MOLDING

CHRISTOPHER IRWIN
Consultant, Michigan

Blow molding is a process for manufacturing containers, jars, and bottles. It is also a process for manufacturing other hollow objects such as double-walled tool cases, parts for toys, automotive ductwork, fuel tanks, flowerpots, flat cabinet panels, and so on.

Artisans have used the fundamental process for many centuries to fashion glass bottles, jugs, and urns. Archeologists discovered markings recording the glass blow-molding process on the walls of Egyptian royal tombs from 1800 B.C. (1). In the mid-20th century, with the discovery of more suitable thermoplastic materials—in particular, when low-density polyethylene became commercially available following World War II and high-density polyethylene became commercially available about a decade later, (2)—bottle manufacturers began to seriously consider thermoplastic materials as an alternative to glass. Bottles made of these materials have many benefits, including light weight, impact strength, and ease of use convenience.

This article provides an introductory discussion of fundamental container-manufacturing processes currently in use with thermoplastic materials. Primarily, the process involves first manufacturing a “pre-shape,” that is a parison or preform, using either extrusion-molding or injection-molding methods. While synonymous terms, “parison” generally relates to extrusion-based methods and “preform” relates to injection-based methods. Either of these molding methods or approaches generally involves a plasticizer that melts, pushes, and, with other tools, shapes the material into the parison or preform. A female mold cavity, having a shape of the container, captures (while still warm) and then a flow of pressurized air “re-shapes” the parison or preform to conform to this cavity. Figure 1 is an array of extrusion blow-molded bottles.

High-density polyethylene (HDPE) and polyethylene terephthalate (PET) are common thermoplastic materials for containers. Other container materials include: polypropylene (PP), low-density polyethylene (LDPE), polystyrene (PS), and polyvinyl chloride (PVC).

HISTORY

An early commercial attempt to blow-mold hollow plastic objects, a baby rattle, was in the later half of the 19th

Figure 1. An array of extrusion blow-molded bottles. (Courtesy of Graham Engineering Corporation.)

century using two sheets of cellulose nitrate material clamped between two mold halves (2). Steam injected between the sheets softened the material, sealed the edges, and expanded it against the mold cavity (3). Regrettably, cellulose nitrate is highly flammable, thus limiting practical use.

More useful cellulose acetate and polystyrene thermoplastics became available in the 1920s and 1930s (4). By the mid-1930s Owens-Illinois Glass Co. and PLAX Corp., a newly formed division of Hartford Empire Co., each began to develop proprietary plastic bottle manufacturing processes based in part on automated glass-blowing machinery then in use (2). Unfortunately, commercialized cellulose acetate and polystyrene bottles were significantly more expensive and, other than novelty, these bottles offered no other marketable advantages over glass.

Low-density polyethylene provided the necessary advantage; in the mid-1940s, following World War II, PLAX Corp. began blow molding the first commercial plastic container in high-volume, a squeeze bottle for Stopette underarm deodorant (2).

While commercial development of the squeeze bottle was a significant event, blow molding of thermoplastic materials in North America did not really begin until the mid-1950s when high-density polyethylene became commercially available (5); more important, commercial blow-molding machinery becoming available in the late 1950s (6). High-density polyethylene provided additional stiffness while retaining some “squeezability” when required, and commercial machinery provided an opportunity for other companies to establish blow-molding manufacturing operations. Until that time, a select few using proprietary machinery were the only companies manufacturing plastic containers. By 1960, over 55 builders were in the business of manufacturing blow-molding equipment (7). Many of these builders were unknown a year earlier and most do not survive today.

BASIC PROCESS

Figure 2 illustrates the basic blow-molding process using the extrusion molding method to create the parison.

In view Figure 2a, a blow-molding machine extrudes a hot tube-shaped parison typically in a downward direction from an extrusion head. Because the parison is tubular, it has two substantially open ends. The machine places the parison between two halves of a bottle blow-mold cavity. In this view, the machine has a blow pin with an end extending from the extrusion head and positioned inside the parison. The blow pin is actually a metal tube with a passage allowing a flow of air to enter inside the parison at the appropriate time. While this is a common blow pin placement, machinery builders and designers have developed several other arrangements with similar function.

In Figure 2b, once the parison reaches a proper length, the machine’s clamp system closes the two mold halves against each other to close off and seal the parison open ends. At one end, the mold pinches the parison flat. At the other end, adjacent to the extrusion head, the mold also pinches the parison substantially flat while sealing it around the blow pin. The pinching of the parison creates flash material. Machinery, later in the manufacturing

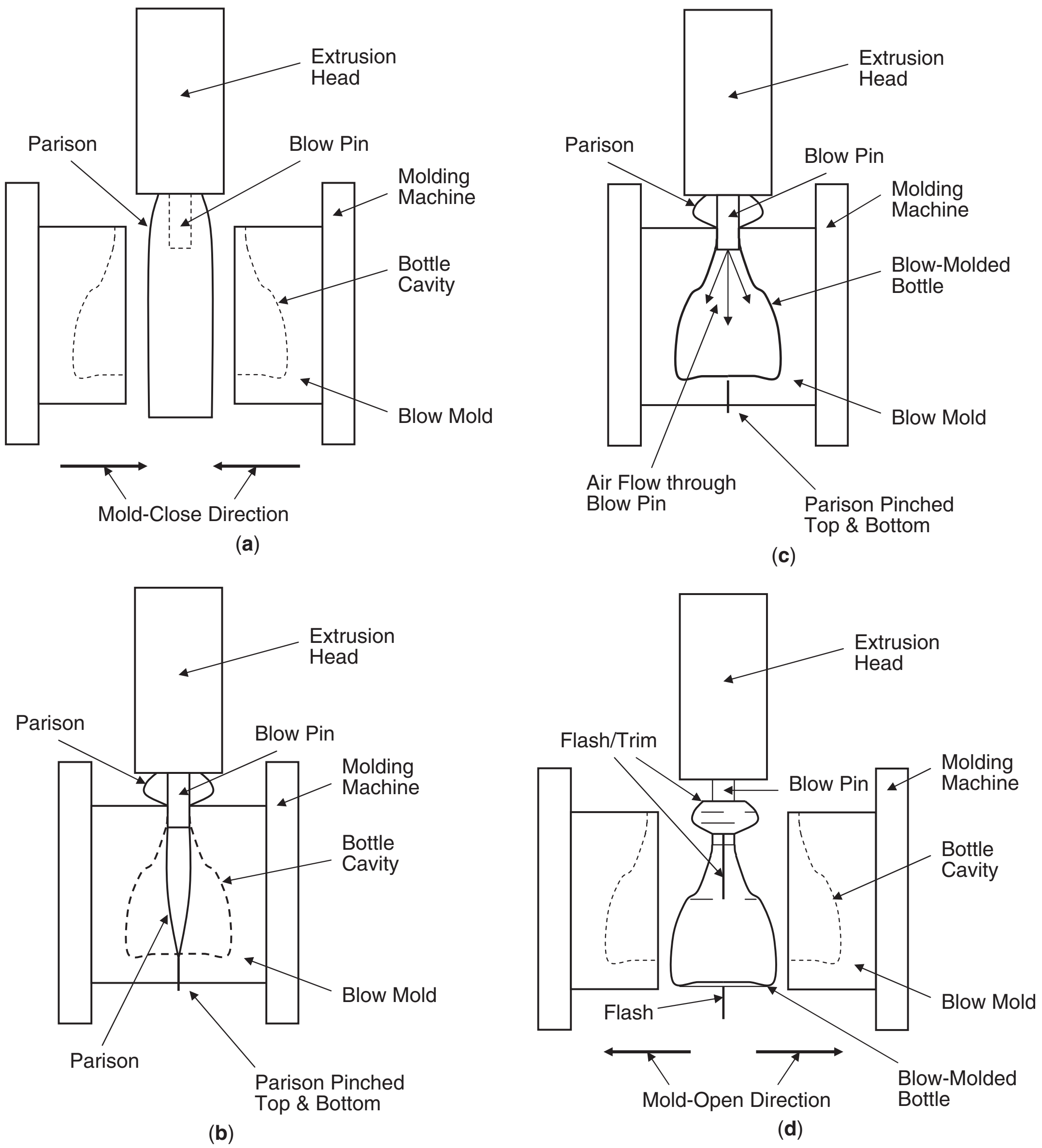

Figure 2. Basic blow-molding process sequence: (**a**) Parison extrusion; (**b**) mold close and parison pinch; (**c**) parison inflation and bottle cool; (**d**) mold open and bottle eject.

process, trims and recycles this flash. The flash portion is often 20–50% of final bottle weight.

In Figure 2c, air flowing through the blow pin at an elevated pressure inflates, thereby pressing and conforming the parison to the mold cavity surfaces. The machine holds the air pressure for a period sufficient to allow the mold cavity to cool the conformed parison, thereby retaining the molded shape of the container or bottle. Generally, machinery circulates water through channels in the mold, thereby maintaining a consistent mold temperature.

In Figure 2d, the machine ejects or removes the molded bottle from the mold cavity, usually to one side or downward. Typically, machinery trims away the flash still attached to the bottle in a secondary operation.

Although Figure 2 shows the extrusion method for creating the parison or preform, using the injection method does not alter process fundamentals—in particular, inflation of the parison or preform.

EXTRUSION BLOW MOLDING

Container manufacturers can make bottles, jars, or drums of nearly any size using extrusion-based blow-molding methods. Extrusion blow molding has two main process categories, that is, container manufacture using continuous extrusion machinery and intermittent extrusion machinery. Each category has machinery subcategories tailored to specific application requirements. Compared to injection-based blow molding, mold tooling for the extrusion blow process is relatively less expensive. In addition, the extrusion blow process has relatively few shape restrictions and is the only low-cost method for manufacturing a bottle with an integral handle.

Continuous Extrusion

Machinery continuously forms the parison at a rate equal to that required to blow, cool, and remove the molded bottle. To avoid interference with parison formation, the machine's mold-clamping mechanism or system must move quickly to capture the parison and return to a blowing station, thereby creating space for the next parison to form.

Builders have made machinery capable of molding large containers, such as a 35-gal trash container, using the continuous extrusion approach, but the approach is better suited for smaller containers, typically 10 L (2.5 gal) or smaller in capacity. In fact, most continuously extruded blow-molded bottles are 4 L or less in capacity.

The continuous extrusion process is capable of molding all commonly molded thermoplastic materials, but the process is particularly ideal for molding heat-sensitive PVC materials. Relatively low-pressure, slow uninterrupted flow of melted material through an extruder or plasticizer and parison extrusion head helps minimize thermal degradation of heat-sensitive polymers.

Several machinery configurations exist, but two approaches generally predominate: shuttle continuous and vertical rotary continuous. Less common approaches include rising-mold continuous and horizontal rotary continuous configurations.

Figure 3 illustrates the shuttle continuous extrusion approach. With this method, the blowing station is located on one or both sides of the parison extrusion head. As the parison reaches proper length, the blow mold and clamp (while open) quickly shuttle to a point under the extrusion head, closes to capture and then cut the parison from the head, and return to the blowing station where the blow pin enters to seal and then inflate the parison against the mold cavity surfaces. With dual-sided machine concept, as shown in the illustration, two clamp systems shuttle on an alternating basis. To increase production output, machines use multiple extrusion heads with multiple mold cavities—for example, a triple parison head with two triple mold cavity sets. Generally, the mold and clamp slides or swings on an incline. This provides extra clearance from the ever-advancing parison as the mold and clamp moves to the blowing station. An alternative means for providing additional clearance is by "bobbing" the extrusion head up during the return movement and then down following clamp movement.

The shuttle machinery configuration offers a number of advantages. The configuration allows critical dimensions of the bottle neck-finish to be "pre-finished" or "calibrated" in the mold with a water-cooled blow pin. This eliminates the need for post-mold secondary sizing or machining of the neck-finish area. Machinery operators also value the easy mold tooling and process setup. Job changes on shuttle continuous equipment can be relatively quick, making the equipment ideal for a short production run. On the other hand, the process has a relatively slow parison extrusion rate requiring the hot plastic material to have exceptional "melt" strength. That is, the parison must not appreciably change shape from material flow caused by its own weight as it extrudes from the head. Shuttle continuous extrusion machines, particularly single-sided machines, require the hot parison to hang for a relatively long time.

A number of machinery builders supplying shuttle continuous blow-molding equipment have begun offering "long-stroke" machines. These are either single-sided or dual-sided alternating shuttle machines with relatively large multicavity molds. These machines can have as many as 15 mold cavities in each mold set. Of course, the machine

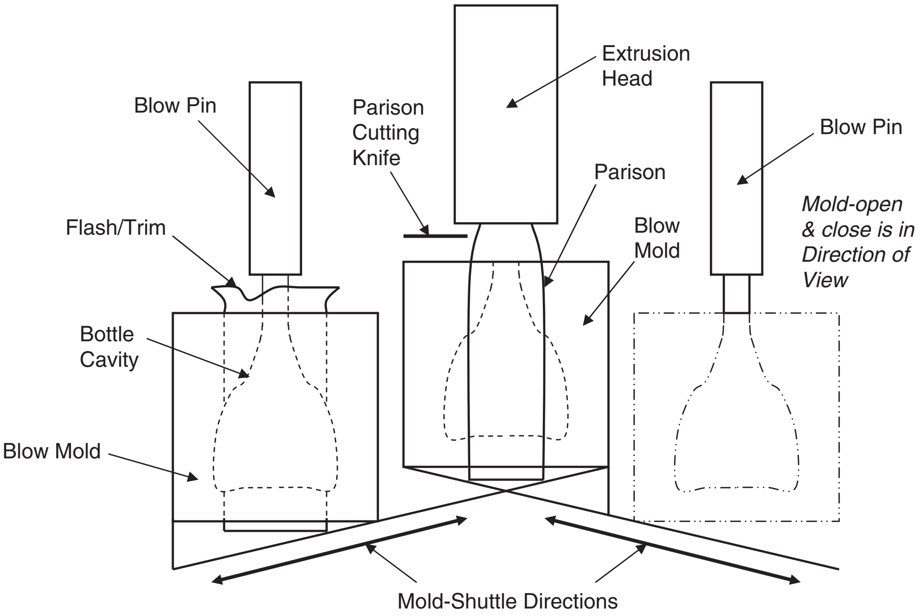

Figure 3. Basic alternating shuttle continuous-extrusion blow-molding machine.

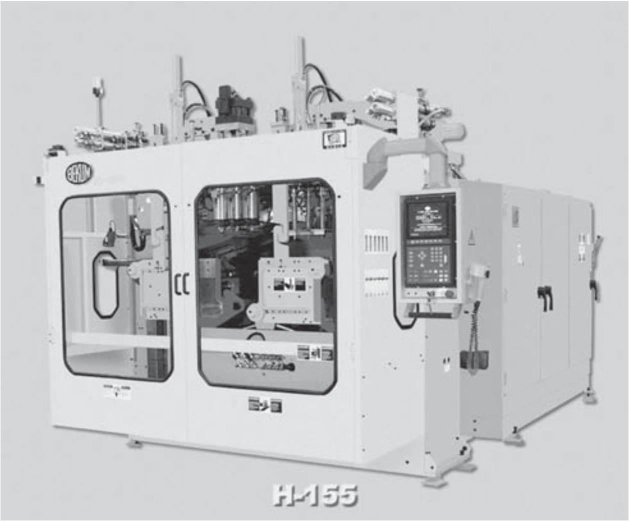

Figure 4. An alternating shuttle continuous-extrusion blow-molding machine featuring a three-parison extrusion head between two mold clamp mechanisms. (Courtesy of Bekum America Corporation.)

requires the extrusion head to extrude the same number of parisons. In comparison, a more conventional shuttle machine typically has six of fewer cavities in each mold set.

Relative to conventional shuttle machines, the long-stroke machine, predominantly in the dual-sided configuration, is capable of high production output per unit of factory floor space the machine occupies. Single-sided long-stroke machines can simplify integration of in-mold labeling equipment and downstream bottle handling equipment relative to dual-sided machines having similar production output. On the other hand, the large mold set and clamping system must travel a longer distance between the blowing station and parison extrusion head. Moreover, the mold set and clamping system has a greater mass; therefore, it is more difficult to accelerate and decelerate. All things equal, an alternating shuttle machine with half as many parisons, mold tooling with half as many cavities per side, and shuttle travel distance substantially half as much will provide a faster per cavity production rate than a single-sided long-stroke machine. Figure 4 shows a typical alternating shuttle continuous-extrusion blow-molding machine.

Recently, machinery builders have begun offering shuttle machines with tandem mold cavities. These machines have a production output that approaches that of a rotary machine while preserving the benefit of the pre-finished or calibrated neck-finish. Normally, at the blowing station the blow pin enters the parison from the top, primarily because the molded bottle leaves the machine in an upright position, greatly facilitating downstream handling. However, the blow pin can also enter from a bottom position, thereby blow molding the bottle upside down. A shuttle machine having tandem cavities produce two bottles from one parison, one in the upright position, the other in the upside-down position. Incorporated trim tooling later separates the tandem bottles.

Figure 5 illustrates the vertical rotary continuous machinery approach. The mold cavities circumferentially mount to a wheel having a horizontal axis of rotation like that of a Ferris wheel. In this approach, one of the mold sets on the rotating wheel captures the parison as it rotates past the parison extrusion head, in this case extruding the parison upward, while other mold sets simultaneously shape and cool bottles from previously captured parisons; another mold set opens, allowing bottle removal.

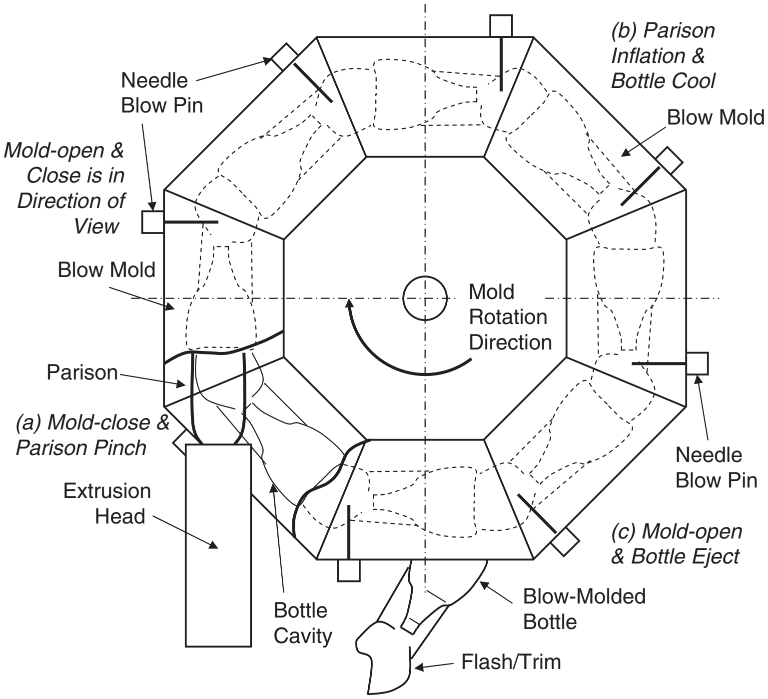

Figure 5. Basic vertical rotary continuous-extrusion blow-molding machine having a parison extruding upward.

Generally, the machine extrudes a single parison and each mold set has one cavity, but some machines have multiple parison and cavity sets. Specific configuration depends on mold and clamp design details—for example, two cavities inline, face-to-face made from a single parison; or two cavities side-by-side, each capturing its own parison extruded side-by-side and in parallel. Direction of mold open and close motion is either parallel to wheel axis, radial to wheel axis, or "book" where one mold half hinges from an edge of the other mold half. Once the mold cavity closes, a needle blow pin punctures the parison. Air flowing through the needle conforms the parison to the cavity surfaces. Figure 6 shows a vertical rotary continuous extrusion blow-molding machine having a single parison extruding in an upward direction a moment before the mold closes to capture. Note that the mold cavity in Figure 6 has a shape to form a bottle having an integral handle. In addition, Figure 6 shows a cylinder, (right-hand corner) for actuating the needle.

The rotary approach has many advantages, primarily for bottle applications requiring high production output. The single parison extrusion head helps to maintain bottle consistency between all mold cavities, particularly for applications requiring a complicated multilayer or coextruded polymer material structure. Another advantage is that in-mold labeling systems, when used, are less complicated because the same unit supplies labels for all cavities. In addition, the vertical rotary approach has a unique capability of holding the parison fast at the top and bottom, allowing an opportunity to manipulate parison material distribution in ways not as easily done with other processes where the parison's bottom end is free.

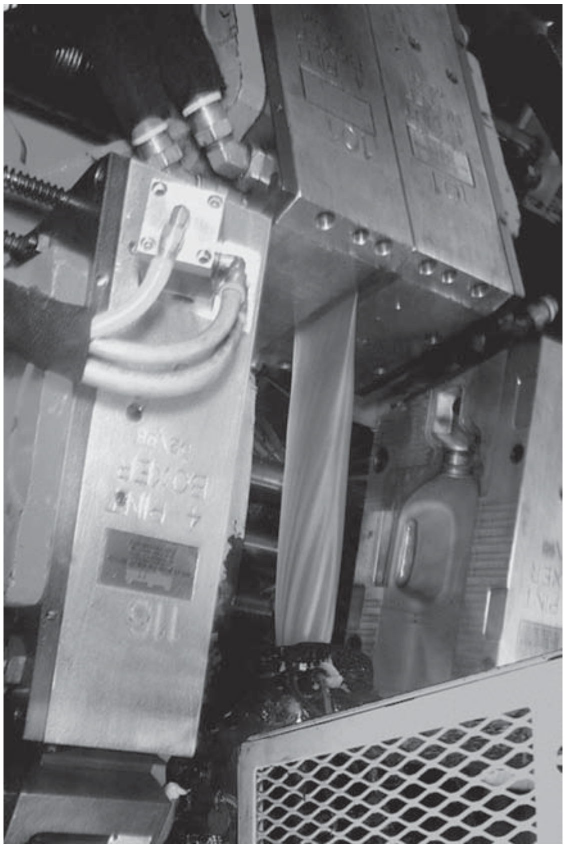

Figure 6. Mold cavity and upward extruding parison of a rotary continuous-extrusion blow-molding machine. Previous mold (now closed) holds the parison in position. Note, the needle blow-pin actuating cylinder near upper left-hand corner and mold cavity for a handleware bottle. (Courtesy of Graham Engineering Corporation.)

On the other hand, the vertical rotary approach, as mentioned previously, typically requires the needle blow pin to puncture the parison. For bottles, this puncture is into a molded dome area above the bottle neck-finish. A post-molding operation cuts off the molded dome with other flash trimmings. Establishing final neck-finish dimensions further requires a sizing or machining operation. Machining the neck-finish area can allow plastic chips to fall inside the bottle and potentially contaminate any filled product. In addition, tooling job changes are more complicated and typically take more time; however, this is not necessarily a problem for long-term high production applications.

Intermittent Extrusion

An intermittent extrusion blow-molding machine quickly extrudes the parison after bottle removal from the mold cavity. The mold-clamping system does not transfer to the blowing station. Bottle molding, cooling, and removal all take place under the parison extrusion head. This arrangement allows the clamping system to be more simple and rugged. Manufacturers typically use the intermittent extrusion approach to make containers from 100 mL (3.4 fl oz) to 210 L (55 gal).

Two machinery configurations predominate: reciprocating screw and accumulator head. A less common configuration is a side-ram accumulator or shot-pot approach. Polyolefin thermoplastic materials, particularly HDPE, are ideally suited for the intermittent extrusion; unfortunately, its start–stop–start character and extremely rapid parison extrusion rate is not best for heat-sensitive materials.

Manufacturers typically consider reciprocating screw machinery for containers less than 10 L (2.5 gal) in capacity. The plasticizer of the reciprocating screw blow-molding machine has an extruder screw that moves back as it helps to melt the thermoplastic material. That melted material, for the next parison, accumulates downstream of the screw's tip. During parison extrusion, the screw quickly moves forward to push the accumulated material through the extrusion head. Next, the mold clamping system closes on the parison and blow pin. The parison then inflates against the mold cavity while the reciprocating screw begins to accumulate material for the next parison. Once the molded container has cooled, the clamp opens allowing container removal. The process then repeats.

For many bottle design configurations, the reciprocating screw machine allows "pre-finishing" of critical bottle neck-finish dimensions during the molding process. Positioning the blow pin inside the parison before mold-close allows a choice of two pre-finishing approaches. The first, a so-called "ram-down" or "calibrated" pre-finishing

Figure 7. Typical reciprocating-screw intermittent-extrusion blow-molding machine. (Courtesy of Graham Engineering Corporation.)

approach provides a result substantially identical to the approach used with shuttle continuous extrusion. The second, a so-called "pull-up" pre-finishing approach, is unique to intermittent extrusion machinery. The blow pin for the pull-up approach moves upward a spit second before the mold opens. During this upward movement, the blow pin shears plastic material in a critical neck-finish inside diameter area to create a precise, round, and smooth inside surface for a closure to seal.

The pull-up pre-finishing approach is an innovation that perhaps is singly most responsible for the success of HDPE milk bottles. Substantially all of the HDPE milk bottles made in the United States feature a neck-finish made using the pull-up approach. The pull-up approach permits extremely lightweight containers that in turn reduces manufacturing cost from less material expense and faster (shorter) molding process from a reduced need for cooling. Bottles featuring the pull-up made neck-finish use a low-cost closure not requiring any secondary sealing material. Instead, the closure features a standing circumferential wedge that, when applied to the bottle, tightly engages the smooth precise inside surface of the neck-finish to establish a simple and highly effective seal. Figure 7 shows a reciprocating screw blow-molding machine.

The accumulator-head intermittent-extrusion process is ideal for heavyweight containers, such as 210-L (55-gal) drums, and noncontainer items, such as parts for toys, automotive ductwork, and the like. Generally, manufacturers will consider accumulator head machinery for containers larger than 10 L in capacity. The accumulator head features a tubular melt reservoir as part of the extrusion head itself. The machine's plasticizer feeds melted thermoplastic material into the reservoir on a first-to-enter, first-to-leave basis. Once a sufficient quantity of melted material accumulates, a tubular plunger within the head quickly extrudes the parison through a head tooling annulus.

Similar to the accumulator-head, the side-ram or shot-pot intermittent-extrusion process uses a single melt accumulator that receives melted thermoplastic from the plasticizer. The melt accumulator is not a component of the extrusion head; instead, it features a piston or plunger along side the plasticizer that pushes the material into a manifold and then through multiple extrusion heads. It is generally used for heavy container applications requiring an excessive amount of accumulated melt that is greater than the amount the reciprocating-screw process is capable of accumulating. Recently, machinery builders are offering the "shot-pot" equipment for classic reciprocating-screw applications, particularly in situations where a fine-mesh screen filters the melt to remove contaminates likely in post-consumer recycled material.

Head Tooling, Parison Programming, and Head-Tooling Ovalization

By definition, the extrusion process requires the parison to be a hollow tube having a diameter and wall thickness adequate to properly form the container. Head tooling consists of two components: a generally circular die substantially establishing, in cross-section, the parison's outer diameter and a generally circular mandrel substantially establishing the parison's inner diameter. In combination, these two components create an annulus through which the parison extrudes. The diametrical difference forms a gap between the die and mandrel that establishes parison wall thickness. For simple less demanding container applications, the gap remains uniform.

Parison inflation in the blow-mold cavity is not even. Some areas will expand more, thus tending to thin more. Parison programming is a technique to compensate particularly for more demanding container applications. Programming permits the molding technician to place extra material in the container where needed and remove material where it is not needed, ultimately allowing improved container performance while making container wall-thickness more consistent and likely reducing overall container weight and cost. Programming dynamically changes annulus gap size by moving either the die or the mandrel relative to the other to a specific profile as the parison extrudes to create axial circumferential zones or rings of thicker or thinner material in the parison corresponding to areas within the blow-molded container requiring more or less material.

Head-tooling ovalization is also a technique to compensate areas of the parison that tend to thin more. By changing the shape of either the die or mandrel from round to slightly oval, the corresponding gap of the annulus created by the die and mandrel circumferentially varies. During parison extrusion, ovalized tooling creates "stripes" of thicker or thinner material parallel to the parison's axis that correspond with areas of the container requiring more or less material. In other words, the parison in circular cross section has areas thicker than other areas within that cross section.

Generally, ovalizing head tooling is a fixed approach, not dynamic, as is the case with parison programming. While ovalized head tooling and parison programming separately or together can significantly improve material thickness distribution in the blow-molded container, some areas of the blow-molded container will always remain slightly thicker or thinner than other areas. The molding technician selects a degree of ovalization in combination with parison programming that is a compromise of wall thickness requirements in various container areas. For example, the container's sidewall may be slightly thicker than necessary to have adequate wall thickness in the container's chime area.

In general, it is not practical or cost effective for most container applications to have dynamic ovalization programmed to a specific profile as with conventional parison programming. However, in large somewhat heavy containers, such as the 210-L (55-gal) drum, dynamic ovalization is justifiable. Even with parison programming and fixed ovalization, a drum's chime area can still have significant differences in material thickness. Dynamic ovalization features a die having flexible lips. Applying a force to the lips during parison extrusion causes the normally circular die to slightly distort into various oval shapes as determined by a programmed profile suitable to specific container requirement, thereby reducing an otherwise necessary material thickness compromise in other parts of the container.

INJECTION BLOW MOLDING

In the classic injection blow-molding process, the plasticizer injects melted plastic into a closed mold having a cavity and a core rod to create an injected-molded "test tube"-shaped preform having an integral neck-finish. While still hot, the injection-molding machine transfers the preform on the core rod to a bottle blow-mold cavity. Pressurized air passing through a valve in the core rod inflates the preform, conforming it to the blow-mold cavity surface. Once cooled, the mold cavity opens and the machine removes the blow-molded bottle from the core rod.

Early injection blow-molding techniques were substantially two-position tooling adaptations of conventional injection molding machines (8). A shortcoming of these adaptations was that the injection and blow-mold stations stood idle during bottle removal. The blow-molding industry generally credits Angelo Gussoni with inventing a three-station injection blow-molder (9). A third station improved efficiency by allowing bottle removal while the other two stations molded either the next preform or the next bottle.

Initially, Gussoni also adapted this three-station concept to available conventional injection-molding machines. Later, purpose-built three-station injection blow-molders evolved that today have become an industry standard. Figure 8 illustrates the basic three-station injection blow-molding process. Note that the process requires three core rods for each preform-mold and blow-mold set.

The injection blow-molding process has a number of advantages. The process is flash- or scrap-free. Molded bottles do not require secondary trimming. Injection molding the preform accurately maintains critical neck-finish dimensions, an important consideration for complex child-resistant and snap-on closures common on pharmaceutical bottles. Bottle weight control is extremely precise, accurate within a range of 0.2 g or less. Bottle surface gloss and texture is pristine and consistent. For typical applications having a capacity less than 250 mL, the injection blow-molding process is generally less expensive than extrusion blow-molding processes. For vials—for example, 1, 5, or 10 mL in capacity—and other very small bottles, bottle manufacturers have only one cost-effective process choice, injection blow molding.

On the other hand, machinery configurations generally limit bottle size to 4 L (1 gal) or less capacity. Because of the relative high cost of mold tooling, the injection blow-molding process is usually not economically justifiable for typical bottle applications having a capacity greater than 500 mL. Finally, the process limits bottle shape and proportion. Although not a problem for most bottle applications, the process is not ideal for extremely flat, overly tall and thin, offset neck-finish, or handleware bottle shapes. Table 1 contrasts important advantages of injection blow molding versus extrusion blow molding.

Pharmaceutical and cosmetic product applications often require small bottles with precise neck-finishes. Furthermore, these products are often expensive, demanding an equally high-value, quality package that injection blow provides and not always available from the extrusion-blow alternative.

Many thermoplastic materials are injection-blow moldable, which could be difficult or impossible using extrusion-blow processes. General-purpose polystyrene is a good example of a thermoplastic that injection-blow-molding machines routinely process. Because the core rod helps to support the melted material during transfer to the blowing station, injection-blow process does not require the same degree of melt-strength that extrusion blow, particularly continuous extrusion blow, requires. In addition, the injection-blow process adds a degree of molecular

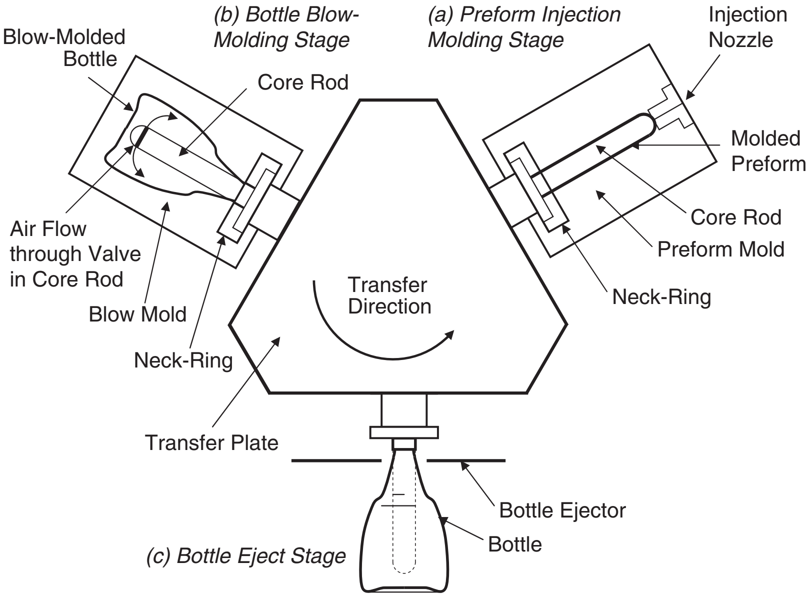

Figure 8. Basic injection blow-molding machine process sequence.

orientation to the general-purpose polystyrene bottle that enhances its impact resistance.

Other materials commonly molded with classic injection blow are high- and low-density polyethylene, polypropylene, polyvinyl chloride, and polyethylene terephthalate. While the injection-blow process approach provides beneficial molecular orientation to polystyrene, other thermoplastics such as polypropylene or polyethylene terephthalate, unfortunately, do not benefit. The core rod of the classic injection-blow process remains inside the preform; additionally, the preform length is approximately the same as the container is tall, conditions that inhibit beneficial molecular orientations of many other materials, particularly in an axial direction.

EXTRUSION—INJECTION-MOLDED NECK PROCESS

This unique hybrid process combines advantages of injection blow with extrusion blow. Originally developed by Owens-Illinois in the 1950s, the process is not much in use today for manufacturing bottles, but a version is in use for manufacturing constant velocity joint (CVJ) boots and parts for other automotive bellows applications. The hybrid process features an injection-molded neck with an extrusion-blow-molded body that provides a dimensionally accurate neck-finish without some of the bottle shape and proportion limitations of injection blow. The hybrid process can mold a flat oval bottle having an offset neck-finish and integral blown-handle configuration typical of extrusion blow with a high-quality neck-finish typical of injection blow. While machinery is not high output, it is ideally suited for integrating an in-mold labeling feature without production penalty.

STRETCH BLOW MOLDING

Thermoplastic materials are polymers of relatively high molecular weight—that is, of long polymer chains made of hundreds to thousands of linked individual monomer molecules. Normally, these long-polymer-chain molecules entangle with other in random complex coils. Careful, proper processing of some materials, such as polyethylene terephthalate (PET) and polypropylene (PP), will establish and retain partial molecular orientation of the polymer chains. In other words, the polymer chains become somewhat aligned with each other in uniaxial and biaxial directions.

While all blow-molding processes involve “stretching” the parison or preform in some fashion, “stretch blow molding” or biaxial-orientation blow molding is a modified process to achieve and retain polymer chain alignment in biaxial directions within the blow-molded bottle, in particular within the bottle sidewall. Biaxial orientation can significantly improve bottle impact strength, transparency, surface gloss, stiffness, and gas-barrier performance, particularly in bottles greater than 250 mL in capacity. Filled soft drink PET bottles, highly pressurized from carbon dioxide gas, are an everyday reality because of the stretch-blow process.

Fundamentally, the stretch-blow process requires precise conditioning of the preform to a temperature warm enough to allow rapid inflation and molecular alignment but cool enough to retard re-randomization of its molecular structure once aligned. Preform manufacture is by either extrusion molding or injection molding; however, dimensional precision provided by injection molding has allowed that approach to dominate in bottle manufacturing today.

Most common polymers biaxial-oriented are polyethylene terephthalate (PET) and polypropylene (PP). Other polymers include polyvinyl chloride, acrylonitrile-based copolymers, and a high-performance polyester, polyethylene naphthalate.

Figure 9 illustrates typical preform and bottle proportions. Note that the preform is significantly shorter than the bottle. In comparison, conventional extrusion-blow parison and injection-blow preform are substantially the

Table 1. Injection Blow Molding Versus Extrusion Blow Molding

Injection Blow Molding	Extrusion Blow Molding
Used for small, heavier bottles, typically less than 500 mL	Used for larger bottles, typically larger than 250 mL
Best process for polystyrene; ideal for most other thermoplastic materials	Best process for polyvinyl chloride; with adequate melt strength, ideal for many other thermoplastic materials
Scrap-free: no flash/trim to recycle; no pinch-off scar on bottle; no post-mold trimming required	Fewer bottle shape limitations permitting extreme dimensional ratios: long and narrow, flat and wide, doubled-walled, offset neck-finish, molded-in handle, and other odd shapes
Injection-molded neck-finish provides more accurate neck-finish dimensions that better address special shapes required for complicated safety and tamper-evident closures	
Precise and repeatable bottle weight control from injection-molded perform	Low-cost tooling often made of aluminum; ideal for short- or long-run manufacturing applications
Excellent and consistent bottle surface texture	Adjustable weight control ideal for prototyping applications

same length as the bottle is tall. The flow of air at elevated pressure stretches the preform in a "hoop" direction—that is, a direction substantially perpendicular to the preform's axis. At the same time, the flow of air, often in combination with a stretch rod, stretches the preform in an axial direction—that is, a direction parallel to the preform's axis. Needed air pressure is extreme; for example, PET applications often require 600 PSI (4100 kPa) to properly inflate the preform. In comparison, most extrusion blow-molding applications require about 90 PSI (600 kPa).

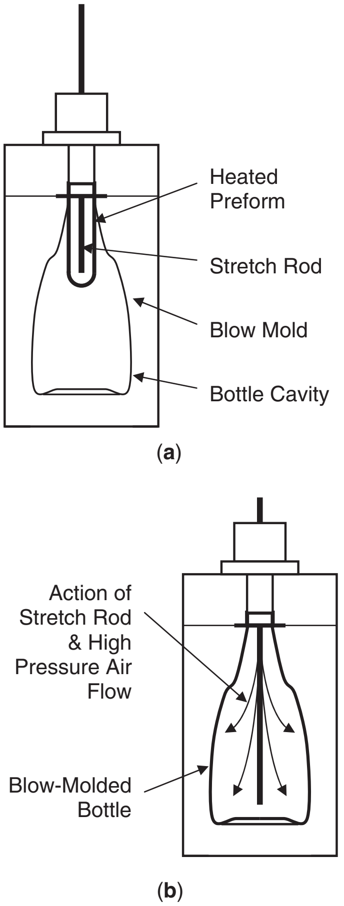

Figure 9. Basic stretch blow-molding process sequence: (**a**) Mold close on preform; (**b**) stretch blow molding. Note that for many PET applications, preform length is typically about one half the bottle height.

There are two basic stretch-blow methods: one-step and two-step. While at least one machinery builder has produced a one-step machine capable of producing a 20-L container, most stretch-blow containers are less than 4 L in capacity.

One-Step Method

Production stages of preform injection molding, heat conditioning, and blow molding take place in the same machine. Molding technicians generally consider it better for manufacture of wide-mouth jars and better for bottles having extreme oval or other unusual cross-sectional shapes. The one-step method minimizes blemishes to provide a pristine bottle-sidewall surface appearance. In addition, the preform does not require a handling ring, as the two-step method requires. Eliminating the handing ring can improve the bottle's overall aesthetic appearance. Tooling and machinery setup is relatively easy, making the method ideal for short-run production applications. In addition, the method potentially saves energy in that the preform does not require reheating from room temperature (see Figure 10).

On the other hand, one-step machinery typically has an equal number of preform cavities and blow-mold cavities. Dictated by specific preform and bottle shape, weight, and performance requirements, rarely is an optimum process or ideal production rate for preform molding stage in perfect balance with that needed for bottle blow molding stage. Accordingly, one process stage, usually preform injection molding, will govern overall machine productivity while retarding productivity of the other process stages. Sometimes process technicians are tempted to make compromises, usually in preform configuration, that reduce overall bottle performance in exchange for greater overall production output.

There are three general variations of one-step machinery. One variation features a four-station rotary table. Preform injection molding in station one. Unlike injection blow molding, the machine removes the preform core rod before transfer to the next station. The preform is heat

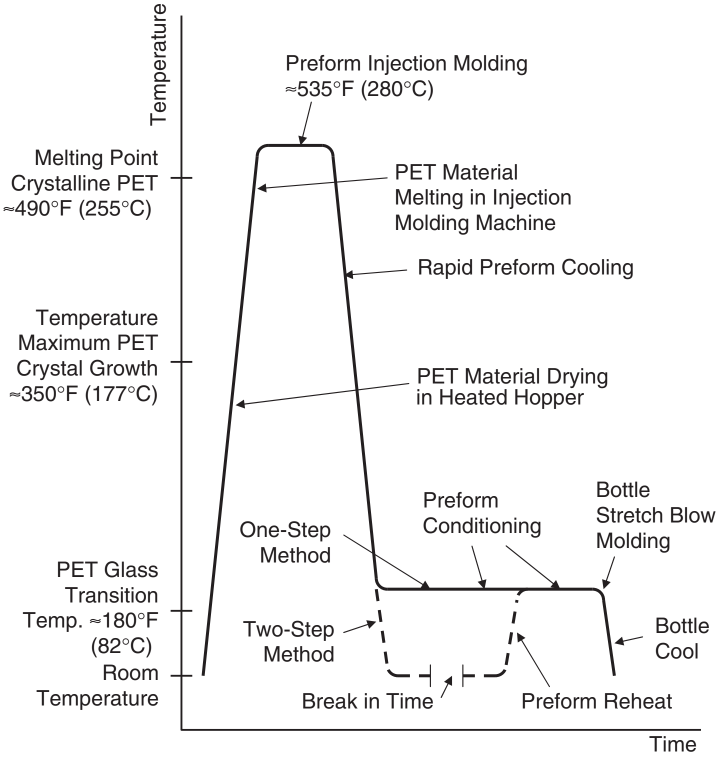

Figure 10. Comparison of basic one-step and two-step stretch blow-molding processes of PET.

conditioning in station two by heating and/or cooling specific areas within the preform. Preform blow molding into the bottle occurs in station three and bottle removal occurs in station four. The second variation features a three-station rotary table. Some machines combine preform injection molding with heat conditioning in stage one. Other machines combine bottle blow molding and bottle removal in station three. The third variation combines in one machine a substantially conventional preform injection-mold tooling and apparatus with a substantially conventional bottle blow-mold tooling and apparatus connected by a preform transfer mechanism that includes a short preform reheat oven. Preform injection-mold cavity count is higher than bottle blow-mold cavity count, allowing a more balanced operation.

Two-Step Method

Production stage of preform injection molding is separate, taking place in a separate machine from heat conditioning and bottle blow molding stage. Molding technicians often refer to the two-step method as “reheat and blow.” The method allows technicians to optimize preform and bottle design and overall production efficiency. Equipment with extremely high output is available. Figure 11 shows a high-output PET preform injection-molding machine; although not evident in the figure, these machines have a robotic takeout that includes a post-mold cooling system. Figure 12 shows a typical high-output PET preform injection mold.

Figure 13 shows a high-output horizontal rotary bottle stretch blow-molding machine with a preform oven for heat conditioning. Bottle manufacturers often link a group of injection molding machines producing the preform with a group of blow-molding machines producing the bottle with conveyors that reduce part handling and “work-in-process” inventory. Nonetheless, manufacture of the preform and the bottle can be separate and in different facilities.

Molding technicians tend to use the two-step method for containers having a substantially round cross-sectional configuration; however, with improved reheat ovens capable of heating regions within the preform to a different temperature than other regions and precise preform positioning in the blow-mold cavity, two-step machinery is often suitable for containers having a substantially oval or rectangular cross-sectional configuration.

MULTILAYER

All materials—whether metal, glass, paper, or plastic—have certain strengths and weaknesses. Layering two or more materials can economically overcome individual material shortcomings. Multilayer blow molding is a way to combine the strengths of two or more thermoplastic materials to economically manufacture bottles that can package a product far better than any of the materials could individually. In recent years, multilayer structures and related barrier polymers and machinery has been an active development area within the blow-molding industry, particularly for PET bottle applications. Thermoplastic materials in bottles now routinely protect sensitive products previously not feasible.

Ideal characteristics of many bottles include: low cost, strength, clarity, product compatibility, and gas barrier. Polypropylene, for example, is a relatively low-cost material suitable for food contact and having acceptable clarity,

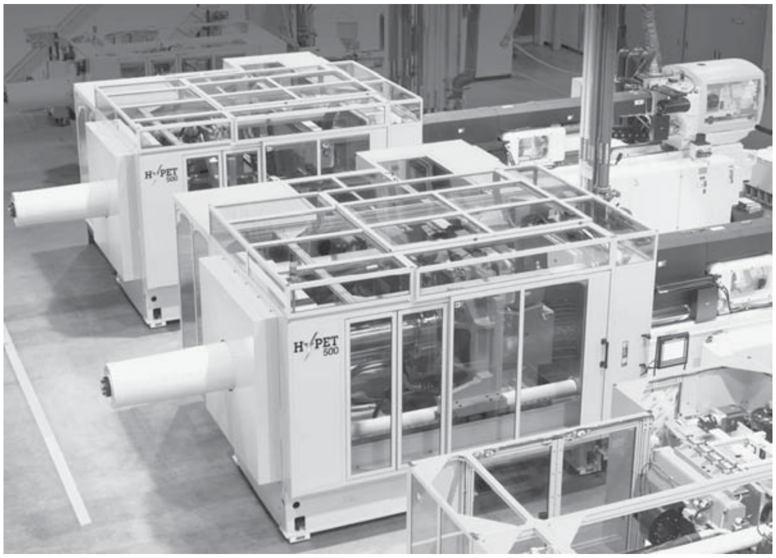

Figure 11. Typical high-output preform injection-molding machine. (Courtesy of Husky Injection Molding Systems.)

excellent water-vapor barrier, good heat, and impact resistance. Polypropylene is also a poor oxygen barrier, making the material unsuitable for packaging oxygen-sensitive foods requiring long shelf life. An oxygen molecule can easy permeate through a wall made of polypropylene. Ethylene vinyl alcohol (EVOH) copolymer, on the other hand, is a high-cost thermoplastic material with excellent oxygen gas barrier but sensitive to water, which can significantly deteriorate its barrier performance if unprotected. In combination, a thin layer of EVOH protected by the polypropylene can greatly enhance bottle performance, making it suitable for packaging products previously not practical. Ethylene vinyl alcohol copolymer does not generally adhere well to polypropylene, polyethylene, or polyethylene terephthalate. Accordingly, multilayer structures often use a mutually compatible adhesive between layers. Multilayer bottles not having the adhesive can easily delaminate and separate its layers.

There are several methods with several variations for establishing the multilayer bottle structure. These multilayer methods generally fall into four broad groups: (a) extrusion molding of a multilayer parison, (b) injection molding of a multilayer preform, (c) coating the injection-molded preform or blow-molded bottle interior or exterior, and (d) bottle treatment.

Extrusion Multilayer

Blow molding machinery form the multilayer parison by simultaneously extruding two or more thermoplastic materials in continuous layers within the parison's wall (at least for packaging applications, for example, automotive

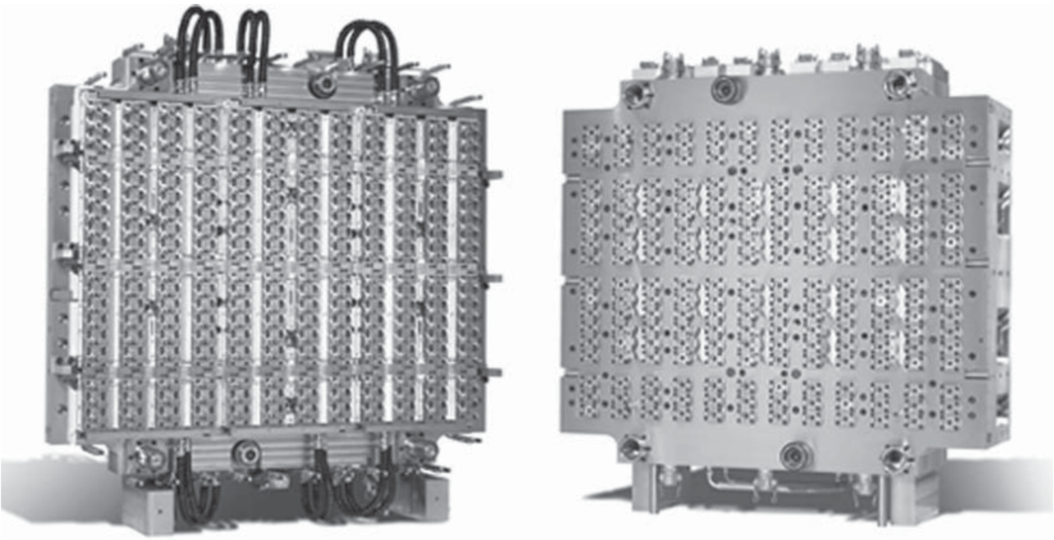

Figure 12. Typical high-output preform injection-mold having 216 cavities for manufacturing a PET preform. (Courtesy of Husky Injection Molding Systems.)

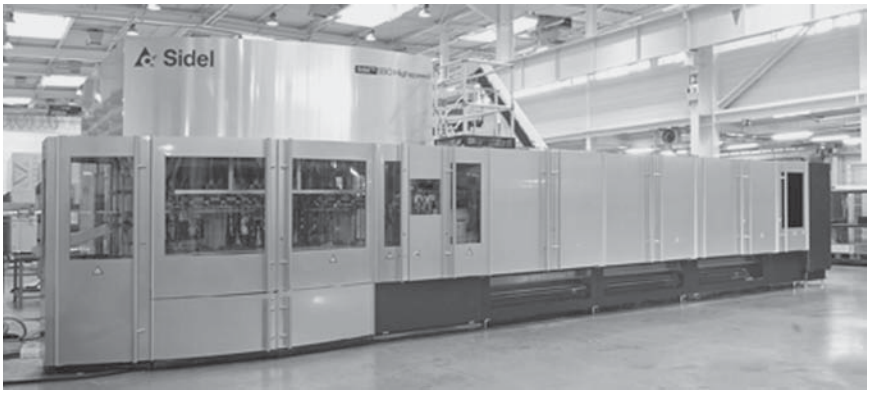

Figure 13. A horizontal rotary two-step blow-molding machine with preform oven. This is a high-output machine featuring 34 blowing stations capable of manufacturing over 61,000, 0.7-L carbonated soft drink PET bottles per hour. (Courtesy of Group Sidel.)

part blow molding of an under hood duct might employ intermittent and/or discontinuous layers). Creating the multilayer structure is relatively straightforward because melted thermoplastic materials flow in a laminar fashion, and the high-molecular-weight materials will not mix while passing through the extrusion head. Figure 14 illustrates a cut-away schematic of a typical six-layer extrusion head.

Most high-performance extrusion multilayer containers use polyethylene or polypropylene for its structural layers and, as the gas barrier layer, ethylene vinyl alcohol copolymer or a polyamide, typically poly-*m*-xylylene adipamide or nylon-MXD6 developed by Mitsubishi Gas Chemical. Product applications include: automotive and small-engine fuel tanks, juice bottles, and ketchup bottles. Figure 15a illustrates a typical extruded multilayer container wall structure for food products. If we change the polypropylene to high-density polyethylene, the structure becomes typical of fuel tanks.

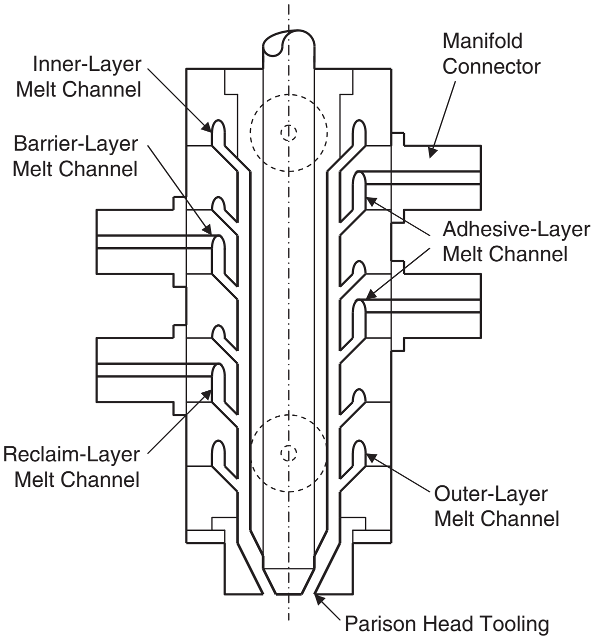

Figure 14. Cut-away schematic of a typical multilayered parison extrusion head.

However, high-performance gas barrier applications are not the only use for extruded multilayer structures. Multilayer blow molding has become a significant means to recycle postconsumer high-density polyethylene scrap where all of the layers are substantially the same material. Containers for household chemicals and motor oils are typical uses. A common structure is an inner product contact layer of virgin high-density polyethylene, an outer layer of pigmented virgin high-density polyethylene, and middle layer of postconsumer commingled reclaim high-density polyethylene (see Figure 15b). The commingled HDPE is a mixture of homopolymer and copolymer HDPE in a rainbow of colors that becomes an unpleasing yellow-greenish-bluish gray color when molded. The commingled material provides poor chemical stress-crack resistance, a critical product requirement particularly for many household and automotive chemicals. The virgin HDPE copolymer inner product contact layer provides the required stress-crack resistance. A pigmented HDPE outer layer provides a pleasing overall bottle appearance hiding the middle layer.

Although technically not multilayer extrusion, some extrusion heads for high-density polyethylene applications have a coextrusion feature for creating a “view stripe” in an otherwise opaque pigmented container. As the extrusion head establishes the tubular cross-sectional form of the parison from a flow of pigmented thermoplastic material, before the parison exits the head, the pigmented material flow splits at one point with a secondary flow of unpigmented material from a separate plasticizer, thus creating a pigmented parison with an unpigmented translucent stripe. The stripe is in a position usually corresponding with a side of the blow-molded bottle. Graduation marks on the bottle in a position along the view stripe allow consumers to easily judge content volume.

Injection Multiplayer

As with extrusion multilayer, injection multilayer also relies on laminar flow of thermoplastic materials entering the preform cavity to create individual layers. Although there are subtle process variations between several techniques, two or three individual plasticizers inject material into the preform cavity through concentric injection

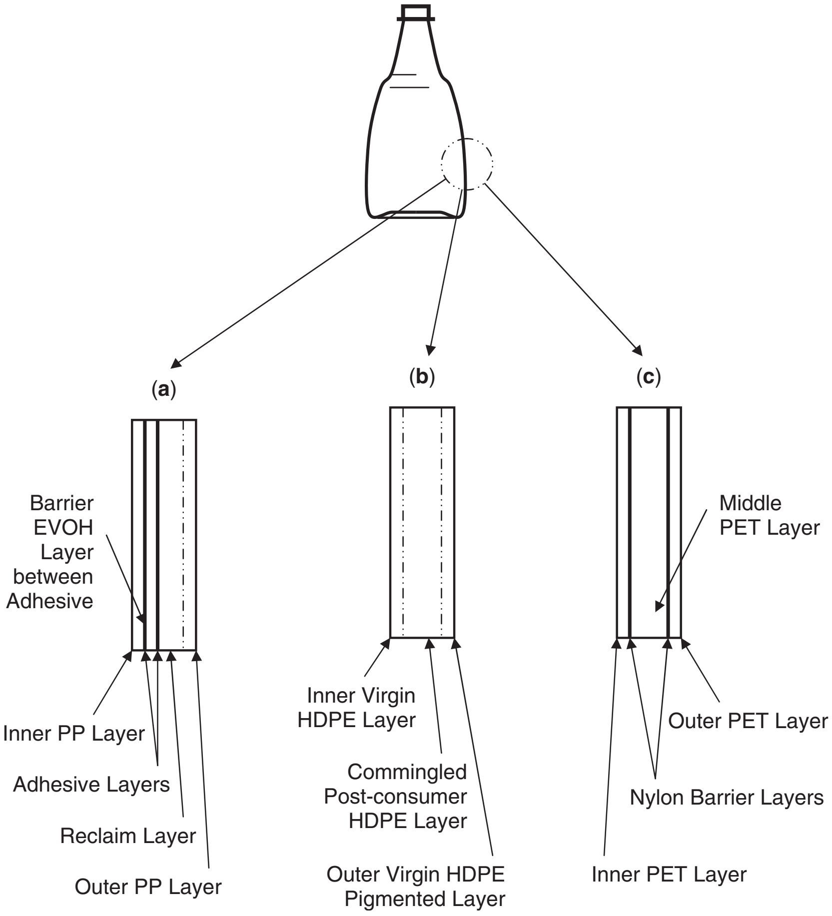

Figure 15. Common multilayer bottle wall structures: (**a**) Typical PP barrier food packaging application; (**b**) typical post-consumer recycled HDPE application; (**c**) typical stretch PET barrier food packaging application.

nozzles, in generally either a simultaneous or a sequential manner, to establish substantially three- or five-layer structures (see Figure 15c). Usually based on polyethylene terephthalate, a typical structure has a PET layer, a gas barrier layer, and another PET layer. The barrier layer is likely polyamide such as poly-*m*-xylylene adipamide or nylon-MXD6. Ethylene vinyl alcohol copolymer is another choice for barrier layer material, but the PET/EVOH is more susceptible to layer delamination.

Creating an injection-based two- or four-layer structure requires an insert or insert equivalent approach; that is, an apparatus usually places the insert made of at least one layer of material onto the injection cavity core, where then the plasticizer of the injection molding machine injects a second material over the insert to complete the multilayer preform. Process technicians often refer to this approach as “over-molding.” In general, the over-molding approach is not as common or as efficient, but it does have an interesting advantage in that the insert can be thermoformed, injection molded, or even extrusion blow-molded.

Development of price competitive multilayer bottles has allowed package designers to consider thermoplastic materials, particularly PET, as a viable alternative to glass and metal where high gas barrier is required. While development of machinery processes is significant, these bottle opportunities would not be feasible without ongoing development of high-performance barrier thermoplastic materials both passive and active in nature.

Poly-*m*-xylylene adipamide or nylon-MXD6 is one of many such materials. Nylon-MXD6 provides excellent passive barrier to oxygen; however, eventually, enough oxygen molecules can permeate through to change highly oxygen-sensitive products. Interestingly, nylon-MXD6 can become active by adding a “transition” metal salt such as that based on iron, cobalt, or other “transition” metals. The salt becomes a catalyst or oxidation promoter that causes the nylon-MXD6 material to oxidize or attract oxygen, thereby allowing the material to actively scavenge oxygen molecules permeating through the bottle sidewall before the oxygen molecule can react with the product contained.

Sometimes an added filler, such as a dispersion of nanoclay material, creates a tortuous path for the permeating oxygen molecule forcing that molecule to travel a greater distance and effectively improving barrier performance. In addition, some barrier materials combine oxidation promoter and tortuous path techniques in a nanocomposite material.

Preform or Bottle Coating

While not a multilayer structure in the sense of extrusion or injection-based approaches, applying a coating indeed creates multilayered structures. All of these coating approaches seek to improve oxygen and/or carbon dioxide gas barrier performance of polyester or PET bottles.

Makers of carbonated beverages, for example, are using coatings to improve carbon dioxide retention in small bottles, less than 500 mL (16.9 fl oz) in capacity, where bottle surface area relative to bottle capacity is too great. Smaller bottles allow a greater rate of gas permeation than larger bottles having less bottle surface area relative to bottle capacity. For example, an uncoated 2000-mL capacity PET bottle provides adequate 16-week shelf life for a cola beverage, but shelf life for an uncoated 300-mL bottle could be less than six weeks.

At least one company has developed a water-based flow coating material and process for covering preform exterior surfaces for improved gas barrier in the blow-molded bottle. Stand-alone apparatus applies and then cures the coating on the preform before the blow-molding machine reheats and then expands that preform into the bottle.

Given that coatings tend to be thin, most approaches apply these coatings to the bottle instead of the preform. Polyvinylidene chloride (PVdC)-based organic coatings were an early barrier material. A more recent organic coating development uses epoxyamine chemistry to create a tough, glossy thermoset polymer film on bottle exterior surface. Stand-alone apparatus typically inline with the blow-molding machine sprays or dips the bottle and then cures the coating material.

Another coating approach uses a form of plasma-assisted or -enhanced chemical vapor deposition process to create an extremely thin inorganic film on either the exterior or interior bottle surfaces. Silica-based film depositions create a silicon oxide (SiOx) barrier film from gas precursors containing, in part, silicon and oxygen. Carbon-based film deposition create an amorphous carbon barrier film using an acetylene gas precursor. Fundamentally, the deposition process involves placing the bottle in a vacuum chamber, introducing appropriate quantities of certain precursor gases into the chamber, exciting those gases with energy and creating a plasma that causes a compound (such as silicon oxide or amorphous carbon) to form that normally would not form if not for the plasma, and allowing the compound to condense on the bottle surface. Specially built machinery for depositing these coatings on bottles are often inline with blow-molding machinery.

Bottle Treatment

Again, while not a multilayer structure in the sense of extrusion- or injection-based approaches, bottle treatment approaches seek to improve gas barrier of volatile hydrocarbon chemicals in polyolefin bottles by allowing polymer molecules at or near the container's surface to react with certain gases, thereby creating a thin integral gas barrier layer on the surface. There are two approaches: fluorination and sulfonation.

The fluorination approach is either downstream or part of the blow-molding process. When part of the blow-molding process, the molding machine uses pure nitrogen gas to initially inflate the parison in the blow mold cavity, quickly followed by a mixture of a small amount of fluorine gas with nitrogen gas to complete the blow-molding process. The fluorine gas easily and quickly reacts with the polyolefin material still hot from parison extrusion. Chemically, the fluorine replaces hydrogen atoms within the polymer molecules that are on the interior surface. To promote reaction, the downstream approach requires reheating the bottle before fluorine exposure. Fluorine is a dangerous gas requiring special handling by trained technicians.

Fluorination makes high-density polyethylene and polypropylene bottles suitable for packaging nonpolar chemicals, such as those in cleaners, mineral spirits, turpentine, solvents such as carbon tetrachloride, and gasoline additives, insecticides, herbicides, and the like.

Although treatment barrier is not quite as effective, the sulfonation approach introduces sulfur trioxide to the inside surface of the bottle or container downstream of the blow molding machine. The sulfur trioxide reacts with the HDPE, causing sulfonic groups to form on the container's surfaces. The approach then introduces ammonium hydroxide to neutralize any acidic byproducts followed by a water rinse.

HEAT-RESISTANT PET BOTTLES

Conventional stretch or molecular biaxial-oriented blow-molded PET thermoplastic bottles cannot withstand temperatures much above 55°C (130°F) without significant bottle distortion or shrinkage from release of molded-in molecular strains and stresses created during the blow molding process. Modified processes make heat-resistant PET polyester bottles (molding technicians also call these "heat-set" or "heat-stabilized" bottles), which in part relieve stresses and "locks-in" remaining stresses with an increased crystalline molecular structure that prevents any significant bottle shrinkage at desired product fill temperatures.

Product applications for heat-set bottles include high-acid foods, such as fruit juice and isotonic drinks. Suppliers using a modified "canning" process often fill these juices and drinks at an elevated temperature capable of sterilizing the bottle, typically 68°C to 96°C (155°F to 205°F) and usually at 85°C (185°F). Patent literature is full of bottle manufacturing process and equipment descriptions further extending bottle heat-resistant performance for low-acid foods requiring higher-temperature pasteurization or retort sterilization processes (10). Heat-set PET bottles are now routinely for packaging products previously not feasible.

Molecularly, polyethylene, particularly high-density polyethylene, is considerably crystalline in nature. On the other hand, polyvinyl chloride is amorphous. Crystalline thermoplastic materials tend to be opaque. Amorphous thermoplastic materials tend to be clear or transparent. Polyethylene terephthalate is a unique thermoplastic material in that, with relative ease, it can assume a substantially amorphous molecular form or a significantly crystalline form depending on molding and processing conditions. Moreover, PET having crystalline structure can be either clear or opaque. Molding technicians take advantage of this unique PET material capability to manufacture high-performance, transparent heat-set bottles.

Polyethylene terephthalate crystals are generally either spherulitic in shape or rod-like in shape. Spherulitic crystals are heat-induced in substantially amorphous PET, and formations of these relatively large spherulitic crystals cause clear PET material to become a white opaque color. Fundamentally, the spherulitic crystal is larger than light wavelength. Consequently, the crystals reflect light attempting to pass through the PET material. Rod-like crystals initially form in PET material from molecular strain or biaxial orientation and continue to grow with heat. Rod-like crystals are relatively small, permitting light to pass without significant reflection.

A conventionally molded PET bottle—for example, a transparent carbonated soft drink bottle sidewall—is about 20% crystalline. These crystals are substantially rod-like in nature. Clear heat-set PET bottles for typical hot-fill applications have at least a 28% crystalline level. Higher-performance heat-set bottles may have crystalline levels around 30–32%. Theoretically, crystalline levels of $>50\%$ percent are possible.

A crucial area of the heat-set bottle is the neck-finish. The neck-finish cannot deform in normal use. Generally, the PET thermoplastic material within the neck-finish is amorphous, that is, noncrystalline. The amorphous structure is often not acceptable for higher performance bottle applications. One means to gain additional heat-stability is to deliberately crystallize the neck-finish with heat to create spherulitic crystalline structure. These bottles are easy to recognize in that its sidewall is clear and its neck-finish is opaque white. An alternative approach, for typical applications requiring slightly less performance, is to increase overall wall thickness of the neck-finish, permitting it to retain its amorphous structure. While this approach adds weight, it is often less expensive overall. The alternative approach works because in a filling-line environment, using a post-fill cooling tunnel and coupled with a generally poor thermal conductivity of the thermoplastic, the heaver neck-finish does not become hot enough, long enough to allow the neck-finish to appreciably deform.

While there are several variations, machinery builders have developed two fundamental heat-set bottle-manufacturing approaches. First is a single-mold method where the machine stretch blow-molds the heated preform into a mold having a temperature of about 120°C to 130°C (248°F to 266°F). Air pressure holds the molded bottle against the mold cavity for about 3 s, which is sufficient time to allow stresses to relieve slightly and promote required additional crystalline growth. Second is a dual-mold method where the machine stretch blow-molds the preform into a first mold having a first shape slightly larger than final bottle form. The machine then reheats this first shape in an oven to relieve molecular stress but not alter biaxial orientation. Heating the first shape causes it to shrivel into a second shape while increasing crystalline levels. The second shape is then blow-molded in a second blow-mold cavity to produce the final bottle form.

Besides heat resistance, another consideration for heat-set, hot-fillable PET bottles is collapse from vacuum-related forces after fill, seal, and cool to room temperature. As the bottle and contents cool, it contracts reducing volume that in turn creates a negative pressure or vacuum inside. This contraction is different from shrinkage that might occur from molecular stress relief in a poorly heat-set bottle. Vacuum-related forces acting against the bottle can often slightly distort bottle shape, particularly in a lightweight bottle. To maintain a pleasing overall appearance, clever hot-fillable bottle designs have “vacuum panels” or other surfaces that manage these distortions in a uniform fashion.

ASEPTIC BLOW MOLDING

While any blow-molding process can directly or indirectly link with a filling machine that sterilizes the bottle and maintains an aseptic filling environment, aseptic blow-molding usually involves the extrusion blow-molding method where the bottle is blow-molded in a commercially sterile environment with highly modified equipment. Often the product-filling process is an integral part of the blow-molding machine. Generally, aseptic blow-molding machines use one of two fundamental approaches.

Blow-and-Hold Approach

This is substantially a two-stage approach. The blow-molding machine seals the bottle interior before removal using moving plates in the mold to seal the blow-pin opening after pin withdrawal. Following removal from the machine, the bottle exterior is no longer in a sterile environment, but the seal maintains sterile conditions inside. In the second stage, a stand-alone aseptic filling machine, with its own sterilized environment, sterilizes the bottle exterior and then removes the seal, thereby exposing the bottle interior. Next, the machine fills the bottle with sterilized product and reseals before removal and distribution.

Blow-Fill-Seal Approach

This fundamental approach has two variations. In one variation, the blow-molding machine molds and then fills the bottle within the blow-mold cavity. One or two seconds after initial parison inflation, a measured quantity of product flows in to fill the bottle. A few seconds later, the blow pin and product filler tube withdraw and another small mold cavity, just above the main bottle mold cavity, closes to seal the bottle and product inside. Bottles made and filled, using this variation, often have a molded-in twist-off seal that one can easily remove without a knife or scissors. In another variation, the blow-molding machine uses conventional means to manufacture the bottle and then immediately transfers it to a filling station where the machine fills and seals the bottle with a conventional closure. Bottle manufacture, filling, and sealing all take place in the same controlled commercially sterilized environment.

Aseptic blow-molding machinery modifications generally include extensive use of stainless steel and plated materials throughout. Special "clean-in-place" fixtures sterilize all internal surfaces, passageways, hoses, blow pins, valves, and so forth. A cabinet encloses the molding and filling area, and a flow of sterilized, filtered air having laminar flow characteristics maintains sterilized conditions inside. Once molding process begins, nothing inside the cabinet is touchable by human hands.

OTHER SECONDARY BLOW-MOLDING PROCESS ADDITIONS

As well as those already discussed, three other additions are commonly part of the blow-molding process.

In-mold labeling

In-mold labeling (IML) is a process addition where a robot-like arm places a paper- or plastic-based preprinted label onto the blow-mold cavity surface just before mold close and parison inflation. A series of vacuum holes in the mold cavity hold the label in place until the expanding hot parison can contact and establish a 100% bond with the label's heat-activated adhesive.

Internal Cooling

Normally, cooling of the blow-molded bottle occurs from the outside only—that is, from the blow-mold cavity itself. Consequently, heat energy must travel through the entire thickness of the bottle sidewall. Usually, this is not a major problem for most applications; however, cooling of heavy containers, such as a drum (or cooling heavy sections within the container), can take a significant amount of time. Assuming that the blow-molding machine plasticizer is capable of delivering thermoplastic melt for the next parison at a higher rate, removing some of the heat-energy from inside molded container can improve molding efficiency.

With varying cost effectiveness, molding technicians have developed several internal-cooling approaches, including injection of liquefied gas, super-cold air with or without injected water vapor, and air exchange. Effectiveness highly depends on specific application conditions; often apparatus and related gas or excess air delivery expense is greater, offsetting any cost benefit from higher productivity.

Post-Mold Cooling

Post-mold cooling is another means that molding technicians use to shorten molding time. Here the blow-molding machine removes the partially cooled bottle from the mold cavity, placing it into a typically water-cooled nest where cooling continues. At least a portion of the nest mimics the bottle contours. In addition, the nest may have a series of fine nozzles directing a flow of high-velocity air toward hotter areas. Often the nest is part of the trim tooling used for removing bottle flash.

BOTTLE DESIGN GUIDELINES

Figure 16 illustrates a number of bottle and neck-finish terms. Good product design begins with a clear understanding of bottle manufacturing process and tooling limitations. Consider injection blow molding, for example; as a rule, available strength to minimize core rod deflection will generally limit its length to about 10 times its diameter. In other words, height of the bottle should be about 10 times or less its neck-finish diameter. Limits in preform wall thickness and ability of tooling to properly heat-condition the preform restricts preform blowup ratio; that is, the bottle diameter or largest dimension perpendicular to the core rod axis should be about three times or less than the neck-finish diameter. For consistent wall thickness, bottle cross-sectional shape also has limits. Oval cross-sectional configurations require the oval's major diameter to be about two times (or less) its minor diameter.

In comparison, extrusion blow molding is not as limited as injection blow molding. For most thermoplastic materials, molding technicians limit parison to bottle diameter blowup ratio to about four times or less. This general rule applies not only to overall bottle shape but also to isolated

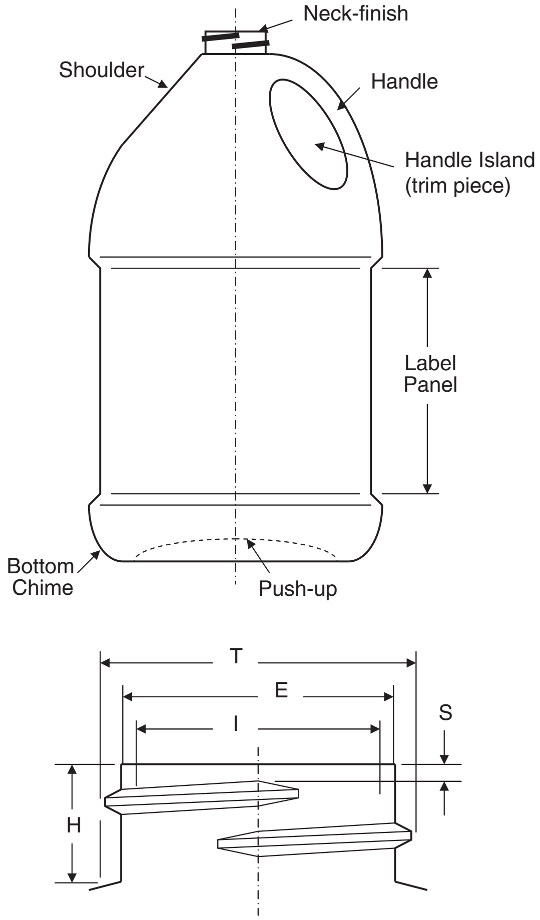

Figure 16. Common bottle and neck-finish terms. T, thread diameter; E, external diameter; I, inside diameter; H, finish height; S, thread start.

sections within the bottle. For example, bottle handle designs that are deeper than wide across mold parting face, particularly at the handle's outer end, are difficult to mold while maintaining a reasonably consistent wall thickness.

Generally, most blow-molded bottles perform better when its sidewall has uniform or nearly uniform wall thickness. Designers can help achieve this uniform thickness by remembering to "radius, slant, and taper" all surfaces. Bottles having square, flat surfaces with sharp corners will not likely perform well. Sharp corners will usually become thin and weak. In contrast, flat side panels often are relatively heavy and thick and likely distorted.

Flat, square shoulder configurations offer little top-load strength, an important consideration for bottle storage and warehousing. Ribs do not always stiffen. Rib configurations create more surface area for the parison to cover, which, in turn, thins bottle wall thickness, potentially creating a bellows or accordion effect that flexes easier. Good designers think about the bottle as a whole structure and attempt to determine how various forces acting on the bottle impact performance. For example, what areas of the bottle are likely to flex when subjected to forces anticipated with double or triple stacked pallets of filled bottles in a warehouse.

Blow-mold process conditions can influence bottle dimensions or, more important, bottle capacity. Consider high-density polyethylene milk bottles, for example. By tradition, U.S. dairies fill milk bottles to within one half inch (13 mm) of the top of the neck-finish. In other words, the milk bottle has very little headspace above its fill level. Because the dairy fills to this level, it requires the bottle capacity to be exact. To avoid overfilling or underfilling, naturally, the dairy does not want its bottles too large or too small.

Technicians at Dow Chemical determined that several process conditions could significantly change bottle capacity (11). High-density polyethylene bottles shrink over time, with about 80% occurring within the 24 h after manufacture, but small amounts of measurable shrinkage still occurs after 10 days. Lightweight bottles are bigger because of less thermoplastic material on the inside and because the bottle bulges more from product weight. A 5-g bottle weight reduction of a typical 1-gal (3.78-L) milk bottle increases capacity by about 12 mL (5 mL for plastic, 7 mL for bulge). Faster manufacture cycle time, lower parison inflation air pressure, and higher parison and/or mold temperature also reduce bottle capacity. Lastly, empty bottle storage temperature is an important consideration. A significant reduction of bottle capacity occurs after 10 days of storage at 140°F (60°C), a condition that could easily occur in a semi-trailer on a hot summer day.

BIBLIOGRAPHY

1. R. Holzmann, "The Development of Blow Moulding from the Beginnings to the Present Day," Kunststoffe **69**, 704–711 (1979).
2. J. H. Dubois, *Plastics History USA,* Cahners Publishing Co., Boston, 1972, pp. 14–16.
3. Early patent describing process approach: W. B. Carpenter, *Process of, and Apparatus for, Molding Hollow Forms of Celluloid or like Plastic Material,* U.S. Patent No. 237,168, February 1, 1881.
4. J. H. Dubois and F. W. John, *Plastics,* Reinhold., New York, 1967, pp. 37–43.
5. R. V. Jones, "High Density PE—Polymer Success Story," *Plastics World* **April**, 32–39 (1969).
6. G. S. Brown, "The Mechanical Processes of Blowmolding," *Plastics World* **May**, 16, 17, 20, 21 (1959).
7. W. O. Bracken, *Blow Molding Developments,* Technical Papers, Vol. VII, 17th ANTEC, Society of Plastics Engineers, 1961.
8. U.S. Patents to Moreland and Gussoni are typical examples of early two-station tooling adaptations: S. T. Moreland et al., *Machine for Molding Thermoplastics*, U.S. Patent No. 2,298,716, October 13, 1942; and A. Gussoni, *Method for Producing Hollow Blown Articles from Thermoplastic Materials*, U.S. Patent No. 3,011,216, December 5, 1961.
9. A. Gussoni, *Machine for the Manufacture of Bottles from Plastic Material*, U.S. Patent No. 2,853,736, September 30, 1958.
10. Examples include: T. J. Boyd et al., *Blow Molding Method for Producing Pasteurizable Containers*, U.S. Patent No. 6,485,670, November 26, 2002; H. Sugiura et al., *Double-Blown PET Bottle Shaped Container Having Essentially No Residual Stress and Superior Heat Resistance*, U.S. Patent No. 5,928,742, July 27, 1999; G. Denis et al., *Equipment for the Manufacture of Polyethylene Terephthalate Container*, U.S. Patent No. 5,334,007, Aug. 2, 1994.
11. *Operators Guide—Controlling Shrinkage of HDPE Bottles*, Dow Chemical Co., Midland, MI, 1979.

General References

C. Irwin, "Blow Molding" in A. L. Brody and K. S. Marsh, eds., *Encyclopedia of Packaging Technology*, 2nd edition, John Wiley & Sons, New York, 1997, pp. 83–93.

D. V. Rosato, A. V. Rosato, and D. P. DiMattia, *Blow Molding Handbook,* 2nd edition, Hanser Gardner Publications, Cincinnati, OH, 2003.

BOTTLE DESIGN, PLASTIC

Andrea S. Mandel
Andrea S. Mandel Associates,
Packaging Consulting Services,
West Windsor, New Jersey

Like many of today's popular packaging techniques, blow molding of plastic bottles became popularized soon after World War II (see Blow molding). The original applications took advantage of the flexibility of plastic material to create squeeze bottles for dispensing of deodorants or medicines. The availability of reasonably priced higher-density polyethylene for rigid containers in the 1950s led to the widespread use of plastic bottles for detergents (1).

As both molding and plastic material technology developed, conversion to plastic bottles expanded beyond household products into health and beauty aids, foods and beverages, and general goods. By the last decade of the twentieth century, most soft drink bottles were converted from glass to plastic, and oil and other automotive product containers were changed from metal to plastic. The 1990s and early twenty-first century brought technical breakthroughs in materials and manufacturing that allowed the economical production of high barrier, multilayer and high temperature resistant plastic bottles. As a result, foods and drugs requiring hot fill and good flavor, odor, oxygen, and vapor barriers (such as sauces and baby food) began to be packaged in plastic bottles and jars in increasing quantities.

The advantages of plastic over glass bottles are abundant. They are safer, lighter, easier to handle for consumer and manufacturer, and easier to manufacture, and they offer improved versatility in design. However, many of the earlier conversions suffered because of the marketer's attempt to imitate the original glass bottle as closely as possible. It was feared that the consumer (especially in beauty aids) would perceive the change to plastic as strictly a cost-savings measure resulting in reduced quality. Today, the majority of plastic bottles are designed to take advantage of the material's unique properties, and the consumer has come to expect all the inherent advantages in the items they purchase.

In the 1970s and 1980s, plastic bottle designers and manufacturers were faced with widely fluctuating plastic material and additive costs and availability. The latter 1980s and 1990s added the additional challenge of environmental concerns. The early twenty-first century has brought us dual concerns: high energy prices with increased costs and the potential for shortages, along with a renewed interest in environmental considerations. The package must not only minimize material usage to reduce costs and environmental impact, it must also take into account its eventual disposal.

BASIC STEPS IN THE PLASTIC BOTTLE DESIGN AND DEVELOPMENT

There are several basic steps for the proper design and development of plastic bottles. They can be summarized as follows:

1. Define bottle requirements—product to be contained, use, distribution, aesthetics, and environmental issues.
2. Define manufacturing and filling requirements—types of molding available and filling and packaging systems.
3. Select materials.
4. Rough drawings.
5. Part drawing.
6. Model and/or rapid prototyping.
7. Mold drawing.
8. Unit cavity.
9. Unit cavity sampling and testing.
10. Finalize drawings.
11. Production mold.
12. Production mold sampling and testing.
13. Production startup.

This is a basic list of steps for bottle production. Some items may be done in a different order, and some can be performed concurrently to save time. Many items will be performed more than once as the design is refined. In addition, mating fitments and secondary packaging are frequently being developed in the same timeframe and become part of the critical path.

DEFINING BOTTLE REQUIREMENTS

What Will the Bottle Hold?

Information about the product to be contained is of primary importance for bottle design, particularly in the selection of material and neck finish. Will the product be liquid, powder, or solid? What is its viscosity? Is it homogeneous, or does it tend to separate out? Will the product have to be shaken to be used? What plastic materials and additives is it compatible with? How sensitive is it to moisture or oxygen gain or loss? Does the product have components (such as those found in detergents) that could make the bottle prone to stress cracking? Will the product outgas into the headspace and cause a pressure buildup? Will the product absorb oxygen from the headspace and tend to collapse the bottle? Will the product be filled into the bottle hot or cold? How much product should the container hold (in weight or volume)? Is the product considered hazardous or in some way regulated?

WHAT ARE THE SPECIAL REQUIREMENTS FOR BOTTLE PERFORMANCE?

Product End-Use. How will the product be used by the ultimate end-user for dispensing and storage? Examples of this are squirt bottles, roll-on bottles, trigger-spray bottles, drainback closure/measuring cup systems, bottles with integral funnels, and bottles that are stored on their caps. What are the storage conditions (temperature, humidity, pressure) of opened and unopened containers?

Secondary Packaging. Will the primary package be sold in an intermediate secondary package? Examples of this are carton, blister, and tray.

Distribution Requirements. Will the unitized product be sold in shipping case or partial-height tray? What type of inner partitions or shrink wrap can be used? Do intermediate customers require smaller unitized packs and if so, of what type? Will the bottle itself contribute to stacking strength? Does the final outer package have to fit on a standard GMA 40-in × 48-in. pallet (consider load optimization and stack heights)? Will cases be shipped in mixed loads at any time? Will shipment generally be by full truckload, partial truckload (LTL), or individual shipment by ground or air (such as United Parcel Service or Federal Express)? Does the product travel in a rack system or bulk package for any part of its distribution? Are there shelf size requirements for the retail market or for storage? Will the distribution system require the product to be shipped over high altitudes or in unusually hot temperatures or low and/or high humidity environments? Will international shipment lead to special conditions or requirements?

Aesthetic Requirements. The plastic bottle is frequently required to act as a salesperson at point of purchase and after the sale. Common concerns include:

1. Shelf facing size—maximization of width and/or height vs depth while maintaining package stability
2. Clarity, opacity, and color
3. Label area and label qualities
4. Requirement for recycled and/or recyclable material

WHAT ARE THE SPECIAL REQUIREMENTS FOR BOTTLE MANUFACTURING AND FILLING?

Options for Bottle Manufacture

Ideally, the designer should be able to select the best manufacturing technique for the particular bottle. However, because of cost, available capital equipment, and other factors, it may be necessary to compromise if possible. The major choices are:

1. Molding process—injection blow, extrusion blow, stretch blow (with variations)
2. New or modified molds (or parts of molds and mold bases)

The various advantages and disadvantages of the different plastic bottle manufacturing methods and molding processes are summarized as follows:

1. *Process:* extrusion blow molding
    a. *Description:* A tube (parison) is extruded through an annular die. Two halves of a bottle mold are clamped over the parison, sealing the top and bottom except for a hole for air injection. Air is injected, expanding the parison to match the mold. Clamped material (excess material at the top and bottom commonly called necks and tails) is removed and generally put back into the system as regrind.
    b. *Advantages*
        i. Relatively inexpensive mold, mold modification and equipment costs for a basic system.
        ii. Multilayer bottles and extruded side stripes possible.
        iii. Larger size containers are economical.
        iv. In-mold labeling available.
        v. Good for handleware or other designs requiring a molded-in “hole.”
    c. *Disadvantages*
        i. High built-in waste due to necks and tails.
        ii. Requires in-mold or postmold trimming of necks and tails.
        iii. Finish (neck area that typically receives a cap or fitment) dimensions and quality are not as consistent.
    d. *Variations*
        i. Extrusion dies can be ovalized to improve material distribution in oval or rectangular bottles.
        ii. Extrusion dies can be programmed to open and close while extruding, providing a top to bottom variation in wall thickness.
        iii. For high-volume large-container production, continuous wheel machines can be used instead of molds that shuttle in and out.
        iv. Instead of direct blow into a bottle, a dome may be created that must be trimmed off the finish. A calibrated neck, on the other hand, uses the blow pin to help mold the finish. The top of the finish may be further improved by posttrim reaming.
        v. High blow ratio (finish to maximum width) or off-center neck bottles can sometimes be improved by blowing “outside” the neck; a wide parison is used and waste is trimmed off the sides of the finish on the parting line.
2. *Process:* injection blow molding
    a. *Description:* The neck finish and “cigar”-shaped body are injection molded in the first phase. This parison mold preform is then moved to a blow station containing a mold shaped like the bottle body. Air is injected through the finish, and the completed bottle is removed from the pin. The injection molded performs can either be premade and stored for later transport to be reheated for the blow molding process, or can be molded and then blow molded all in one continuous process.
    b. *Advantages*
        i. Good quality and control of finish dimensions due to injection process.
        ii. Capability of control and design inside the finish area (as long as there are no undercuts).
        iii. Economical for large volumes of smaller containers.
        iv. Waste not built into molding process (injection mold is hot runner).
        v. Can use PET as material.
        vi. Finished container does not have a “pinchoff” area at the tail (the line where the extruded parison is actually cut off the container during the manufacturing process) that can provide a weak point for drop test or stress-crack failure.
    c. *Disadvantages*
        i. Additional need for injection molds increases cost and lead times (although existing preform molds can sometimes be used to save costs and time).

   ii. In-mold labeling and handles (with "holes") not generally available.
   iii. Not good for larger containers or high blow ratios.
3. *Process:* stretch blow molding
   a. *Description:* This is a variation on injection blow molding wherein the hot parison mold, or preform, is stretched in length by a push rod placed in the bottom prior to blow molding. The preforms can be premade and stored for later transport to be reheated for the blow-molding process, or it can be molded and then blow molded all in one continuous process.
   b. *Advantages*
      i. Improved bottle impact and cold strength.
      ii. Improved transparency, surface gloss, stiffness, and gas barrier.
      iii. Good for pressure containers such as soda bottles.
      iv. Opportunity to save plastic material by optimizing strength through stretch process and good control.
   c. *Disadvantages*
      i. Commonly used PET requires special handling and drying process.
      ii. Extra step required in process.
      iii. High capital equipment costs.
      iv. Additional need for injection molds increases cost and lead times (although existing preform molds can sometimes be used to save costs and time).
      v. In-mold labeling and handles (with "holes") not generally available.

Bottle Filling and Packing

Bottle design needs to take into account the filling and packing operations for the bottle. Important criteria include:

1. *Current equipment and change parts*. There are frequently size limitations (height, width, and depth on equipment). Likewise, change parts and changeover times can be minimized by determining common critical dimensions or easier adjustments (frequently height) with other bottles that might run frequently on the same line.
2. Forces and conditions imparted by the filling and packing operation on the bottle. Common conditions include downward compression due to insertion of items in the neck (such as plugs and balls) or on the finish (such as snap-on closures); bottle body torsion and neck distortion due to high-torque cap application; side-to-side compression due to labeling and starwheel pinch points; multidirectional compression and abrasion due to bulk handling such as in a bottle unscrambler; and bottom drop impact due to automatic drop packing into cases or trays (Figure 1). In addition, aesthetic damage can be done at various points to a labeled or unlabeled bottle due to abrasion at transfer points and handling throughout the line. In some cases, machinery can be selected or modified to reduce these conditions or insure that they occur at protected or strong points on the container. If this is cost prohibitive or not possible, the bottle needs to be designed with these requirements in mind (see Bottle Design and Specification).

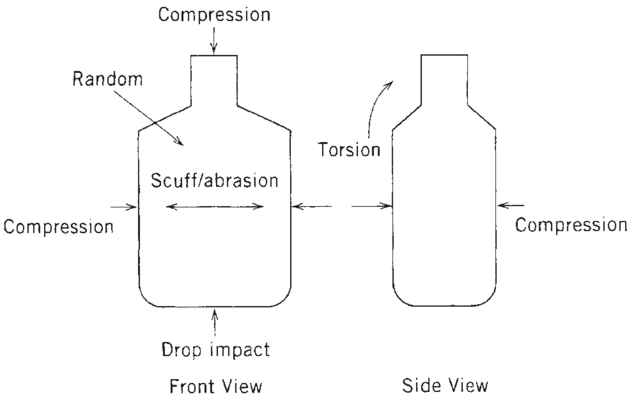

Figure 1. Common stresses on a bottle on a filling and packing line.

BOTTLE DESIGN AND SPECIFICATION

Once the special requirements for the bottle have been determined, sketches and models of various bottle designs meeting these criteria can be produced. As the process continues, the finalists need to become more detailed (dimensions, angles, finish) and begin to incorporate good plastic bottle design principles. Computer modeling and rapid prototyping can be used as part of this process.

GENERAL DESIGN CONSIDERATIONS

1. *Sharp Edges and Changes in Direction Should Be Avoided.* Surfaces should be blended and generous radii used as much as possible at bends and corners (2). Sharp edges can lead to thin and high-stress areas, resulting in stress cracking or failure on drop testing.
2. *The bottle must have minimal or no undercuts.* Thought must be given to how the bottle is to be removed from the mold. The inside of the finish must be stripped from the core rod or blow pin, and the front and back halves of the mold need to open up from the outside of the bottle. Any plastic that would hook onto the tooling or molds can cause the bottle to distort or even break. Very small and rounded undercuts, such as small retaining rings on the inside of the neck, can sometimes be successfully molded; trial and error may be necessary for a particular design and process to see how much is possible.
3. *Wall Thickness Minimum and Distribution Should Be Considered.* Thin spots can lead to stress

cracking, failure on drop test, and even pinholing; thick sections can act as heatsinks after the bottle is molded, and the uneven cooling and shrinkage can lead to bottle distortion. In the case of product that will cool or outgas after the container is sealed, there is a potential for distortion due to negative or positive pressure. This can require special molded-in structures, expansion areas, or controlled wall thickness to minimize these effects. The preciseness of wall thickness guidelines should be determined by how critical it is for performance of the bottle.

4. *Bottle Stability Is Critical.* This is especially true for many of the tall, thin (depth) bottles frequently used in consumer products to maximize shelf impression. In injection blow molding, the height of the pushup (the center of the base of the bottle) can be adjusted. The center of the bottle base must be high enough to not “belly out” for a full or empty bottle, or the bottom of the bottle will be a round surface. Various aids to stability include molding bottom rings (radiused or with a flat land area) or feet (three or four). It is a good idea to put a slight depression in the vicinity of the parting line so that a slightly raised parting line will not contribute to instability. The best solution depends on the bottle’s general shape and center of gravity and on the controls available in the molding process.
5. *Embossed or Debossed Decorations.* These include logos, which can be a free or inexpensive way to add information to the bottle. However, care should be taken to avoid thin spots, undercuts, or sharp edges.
6. *Information that Is Frequently Molded into the Bottom of the Bottle.* This includes material identification symbol (recycling logo, legally required to be on the bottle in several states), mold and cavity number (for quality checks and troubleshooting), and a molder or company logo. Placement should be planned ahead of time, especially because this may affect bottle stability. These should generally not touch or cross the parting line.
7. *The Bottle Sealing Area Should Be Closely Specified.* For standard continuous thread closures, lined or unlined, the land seal area at the top of the container is critical. It needs to be flat, horizontal, and free of dips or nicks. If the flat surface is going to be angled, care should be taken to specify a continuous surface that will create a seal. A minimum land width (flat neck thickness at the top) can be specified. If a valve seal closure is to be used, the circumference inside the finish where it meets the valve is critical.
8. *Anticipate Pressure Differentials.* Special product, filling, and distribution circumstances can lead to pressure differentials between the inside and outside of the filled and sealed container over the course of product life. Examples of this include hot fill, product outgassing, product migration through walls causing suckback, and changes in external pressure and temperature during distribution, storage, and handling. Flexible panels or more flexible materials will not prevent dimensional change, but can prevent damage to the container and allow it to be aesthetically acceptable. Variations in wall thickness support ribs, and stiffer materials can strengthen containers against dimensional changes to some extent. Depending on the product, one- or two-way valves can be added to the closure or inner seal.
9. *Labeling and Decoration.* These are a major consideration in bottle design. A label panel must be flat or have a surface that curves in only one direction. Many label areas are recessed or provide top and bottom “bumpers” to protect the label against scuffing during normal handling and distribution. The maximum label area is determined by a combination of the tolerances of the label placement equipment, the label dimensions, and the usable label panel dimensions. The additive tolerances need to be subtracted from the specified label panel size. Major labeling or decoration methods include the following: (a) In-line labeling (filling line)—labels (generally pressure-sensitive or plain-paper and glue) are applied on the filling line; (b) postmold labeling—labels (generally pressure-sensitive or heat-transfer) are applied soon after the bottle is molded (further shrinkage in the bottle, particularly over the next 24 hours, must be taken into account); (c) in-mold labeling—labels (either plastic or paper) are applied inside the mold during the molding process (bottle versus label shrinkage must be designed into the bottle tooling, especially for paper labels); and (d) direct application to bottle—instead of applying a label, the container is decorated by printing or silk screening directly onto the bottle.

HDPE or PP bottles usually require flame treatment prior to decoration or labeling. Round bottles may need a rotational guide in the bottom to help control them during either process. (See also Labels and labeling machinery.)

Industry Standards

As in any purchased item, specifications and tolerances should be set up between the customer and the supplier. However, the designer is greatly aided by industry standards. Currently, ASTM publishes D2911-94(2005) Standard Specification for Dimensions and Tolerances for Plastic Bottles with standard screw closure neck finish dimensions, threads, and tolerances, and tolerances for various ranges of bottle capacity (up to 5 gallons) and body dimensions. These standards are modified on an ongoing basis and should regularly be checked for updates. In addition to dimensional standards, there are procedures for stress crack resistance, crush strength, drop impact and additional tests (3). The existence of standard finishes greatly facilitates the interchangeability of various stock and custom closures that might be available. The standard tolerances also provide a good starting point for specifications. The designer might wish to tighten some of these tolerances as required, but should be prepared to work

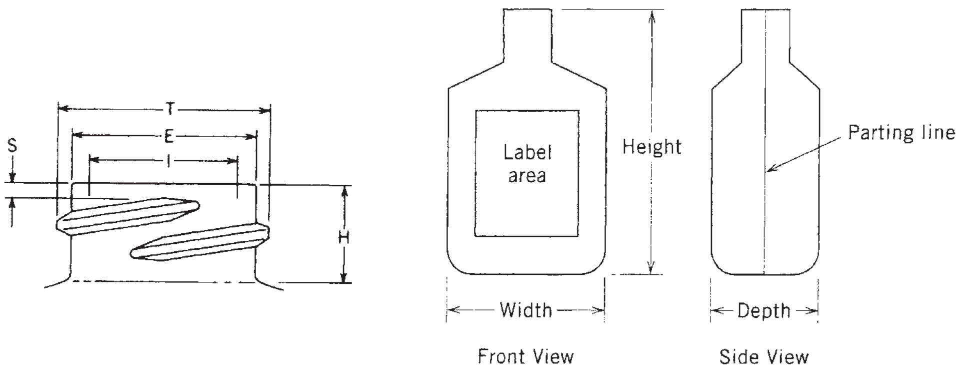

Figure 2. Typical dimensions of a plastic bottle. Bottle and finish nomenclature. T, diameter of thread; E, diameter of root of thread; I, diameter of inside; S, distance of thread start to top of finish; and H, height of finish.

closely with any vendors ahead of time to ensure manufacturing capability.

A typical dimensioned bottle is shown in Figure 2. Table 1 describes a typical container's dimensions and their importance. The sample given is a standard continuous thread finish container, which uses a standard screw-on/screw-off closure that is common on many consumer bottles.

Materials and Colorants

Critical criteria for selection of bottle materials include the following:

1. Cost and availability—should be calculated by the bottle, not just the pound.
2. Environmental—recyclability and availability of recycled material, toxicity or biodegradability.
3. Clarity or opacity.
4. Stiffness or squeezability.
5. Water or moisture vapor transmission rate (WVTR or MVTR).
6. Gas permeability.
7. Chemical resistance to type of chemicals required.
8. Temperature range.
9. Impact strength.
10. Environmental stress—crack resistance (ESCR)

Materials generally used for bottles in the United States include high-density polyethylene (HDPE), polypropylene (PP), low-density polyethylene (LDPE), linear low-density polyethylene (LLDPE), polyvinyl chloride (PVC), polyethylene terephthalate (PET), and polystyrene (PS). Of these, HDPE and PET make up the great majority of

Table 1. Bottle Dimensions

Dimension	Description	Purpose
T	Thread outer diameter	Cap fit and torque control.
E	Diameter between threads	Cap fit and torque control.
H	Height from shoulder to top of finish	Bottom of closure must clear shoulder at maximum torque for proper sealing. The maximum minus minimum H (ΔH) should also be specified to limit neck "cocking," which will also adversely affect the seal.
S	Height from top of thread to top of finish	Thread engagement.
I	Inside diameter of finish	Minimum is for filling tube clearance only. Custom detail should be added for placement of special fitments.
Ovality	$T_{\max}-T_{\min}$ or other area	Ovality in the finish can affect closure fit, torque control, or fitment integrity and fit. Specification should be based on requirements and manufacturing capabilities.
Land width	Sealing width on top of finish	Cap seal and torque control. Specification should be based on requirements and manufacturing capabilities.
Overflow capacity	Volumetric capacity of bottle to top	Consistent filling of bottle with proper amount of product and correct aesthetic fill height.
Overall dimensions	Height, width, and depth at maximum point	Proper machinability on filling line and fit in secondary packaging. Additional dimensions are specified in article drawing.
Weight	Weight of empty bottle	Cost control, to ensure sufficient material, and fill weight control.
Wall thickness	Thickness of wall at minimum and specified points	Thin spots can lead to drop failure or stress crack. Wall thickness should be specified at the absolute minimum found on the bottle (this can vary as to location) and at other critical locations if necessary.

containers by number and weight. Other materials, including engineering plastics such as polycarbonate, are used for special applications. Individual material properties can be found in detail under their separate articles. Many materials can have their properties significantly modified by additives such as plasticizers, fillers, impact modifiers, antistatic agents, and UV (ultraviolet radiation) inhibitors. Copolymers and multilayer coextrusions can further enhance a material.

Colorants are added to provide color and/or opacity to the material. Pigments, an opacity agent (such as titanium dioxide), and a compatible base material are compounded and added to the regular plastic during the molding process. The colorant loading, wall thickness of the plastic, and color and opacity of the product all affect the final aesthetics of the filled bottle (see Colorants, plastic).

Different materials and to some extent different colorants all affect the shrinkage and final performance of a bottle. This must be taken into consideration for testing and qualification.

Computer Utilization in the Design Process

The computer is an integral part of the bottle design process, and new ways of using it are being added continuously. Uses include:

Specifications. Bottle specifications are computerized at both the customer and supplier level.

Computer-Aided Design/Manufacturing (CAD/CAM). Bottle drawings are performed on CAD systems, with improved opportunity for analysis and exploration of options and variables. Mold makers frequently use a CAM system for production of the mold. Some forms of rapid prototyping can also be performed.

Analysis and Data Recording. Test data can be both directly recorded and analyzed on the computer. Sophisticated engineering programs, such as finite-element analysis, can be used to compute and visualize stresses at various points.

Pallet Loads. Several programs, such as those produced by CAPE (4) or TOPS (5), allow quick calculations of finished pallet options based on bottle sizes. This allows for pallet load optimization at the initial design stage.

In addition, there is various software to do everything from evaluating heat transfer in mold design to visualizing product placement on the supermarket shelf.

PROTOTYPING AND TESTING

Once the bottle is designed and unit-cavity samples have been produced in the proper materials, a testing program must be initiated. A testing protocol should be established that checks bottles against both their specifications and the requirement list that was generated.

SPECIALTY BOTTLE REQUIREMENTS

A number of specialty bottles have distinctive requirements. Some of these include:

Roll-On. A round ball is inserted in the finish; rolling the ball against a surface (clothes, parts of the body) dispenses a liquid. The ball is held in place between two rings in the finish. The most common method of sealing is to torque the cap so that it pushes the ball down tightly against the lower ring (Figure 3).

Plug. A small orifice plug is placed into the finish so that product dispensing can be controlled (eye or nose drops, creams). The plug must be inserted without crushing the bottle body or neck finish and yet be difficult to remove. Controlled dimensions or retention rings are some of the solutions.

Drain-Back Closures. These fitments provide pour spouts and matching caps for detergents and fabric softeners. The drain-back section is sometimes

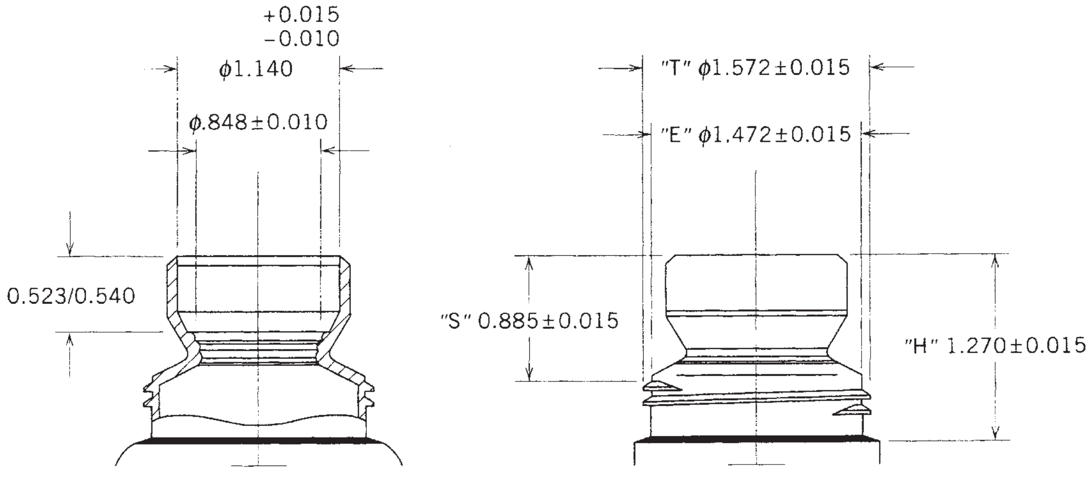

Figure 3. Typical special rollon finish.

placed inside the finish similar to a plug, but frequently before filling.

Child-Resistant Closure (CRC). There are a number of different types of these closures on the market, generally requiring special finishes. The popular "push and turn" instruction requires sufficient H dimension to allow the cap to be pushed down for thread engagement. The "line up the arrows" instruction requires a ring with an interruption under the arrow. Protocol testing includes both closures and containers (see Child-resistant packaging).

Nonremovable Closure. Some dispensing closures are designed to prevent removal. One design has ratchets that can easily be overridden for tightening but prevent loosening (see Closures, bottle and jar).

Tamper Band. Many products (drugs and foods) have tamper bands to show tamper evidence. The band must be able to anchor itself to something on the bottle—a ring is sometimes added to the outside under the finish area (see Bands, shrink; Tamper-evident packaging).

ENVIRONMENTAL CONCERNS

Whether driven by legislation, consumer preference, or the desire to be a good corporate citizen, today's packager has to take environmental concerns into account when producing a package. A new plastic bottle presents a special challenge and opportunity. The following is a brief look at plastic bottles and the ways of handling solid waste other than the landfill:

1. *Reduce.* The preferred way of handling the problem—creating less waste in the first place—has another major advantage. The less plastic we use, the more money we save. This can be accomplished through optimizing structural design, eliminating oversizing, and taking advantage of the best materials for the job.
2. *Reuse.* Although returnable bottles may seem like an obvious answer, this is not necessarily the case: "to withstand the process of return and refill, a refillable container must be about twice as heavy as a one-way container of the same material." This adds impact to energy usage and eventual disposal also (6). However, a number of consumer products, notably detergents and cleaning products, are sold in bottles that the consumer refills without having to undergo this process. The refill packages are designed with less plastic and frills, or are made of lighterweight or more easily crushable materials.
3. *Recycle (Recyclable).* Everything can be recycled by somebody, somehow, somewhere. However, unless a substantial percentage of the bottles can realistically be recycled in the near future, this doesn't mean too much. Although the percentages of bottles that are recycled or could be from programs in place changes constantly, the bulk of recycling is with PET (mostly soda bottles, although some areas have added capabilities to accept other bottles) or HDPE (mostly homopolymer milk bottles, although some areas now accept other containers including copolymer detergent bottles). Plastic containers can be recycled into plastic lumber, piping, or even carpet liner as well as packaging containers. The recycling rate for plastic containers has been estimated at 24.3% for 2005, based on pounds of resin sold (7). To aid in potential recycling, as well as comply with the law in most states, a material identification logo, such as the SPI resin identification code, (8) should be added to all containers.
4. *Recycle (Recycled).* The relatively high cost of collecting, sorting, cleaning, and processing good-quality post-consumer HDPE generally makes it more expensive pound for pound than virgin resin. As the process becomes more efficient and if the cost of virgin continues to climb, this may change. Because of the unpredictability of the color and properties of much regrind, it is frequently used as a middle layer in a multilayer coextruded bottle or as a small percentage in a dark bottle holding nonaggressive product. Food and drug primary packages may not be permitted to use reground plastic directly, although repolymerization or special considerations can be investigated.
5. *Incineration and Conversion to Energy.* Plastics produce heat when burned, which, in turn, can be converted to other forms of energy. The presence of heavy metals (such as lead or cadmium used in some colorants) in a bottle will leave toxic waste residue. Several states have outlawed the use of these materials, and it is critical to avoid them. Older incinerators may also have a problem with chloride containing materials such as PVC (9).

BIBLIOGRAPHY

1. R. J. Kelsey, *Packaging in Today's Society*, St. Regis Paper Company, 1978, p. 69.
2. S. Levy and J. H. DuBois, *Plastic Product Design Engineering Handbook*, Van Nostrand Reinhold, New York, 1977, pp. 169–170.
3. ASTM International Web information. Available at http://www.astm.org/cgi-bin/SoftCart.exe/COMMIT/SUBCOMMIT/D2020.htm?L+mystore+vvra4003+1173846722. Accessed May 30, 2007.
4. CAPE Systems, Inc. Web information. Available at http://capesystems.com. Accessed May 30, 2007.
5. TOPS Engineering Corporation, Web information. Available at http://www.topseng.com/. Accessed May 30, 2007.
6. L. Erwin and L. H. Healy, Jr., *Packaging and Solid Waste Management Strategies*, American Management Association, New York, 1990, p. 26.
7. Plastics Division of the American Chemistry Council and the Association of Postconsumer Plastic Recyclers 2005 National Post-Consumer Plastics Bottle Recycling Report Web information. Available at http://www.plasticsrecycling.org/documents/2005NationalPost-ConsumerPlasticsBottleRecyclingReportFINAL.pdf. Accessed May 30, 2007.

8. The Society of the Plastics Industry—SPI Resin Identification Code Guide To Correct Use Web information. Available at http://www.plasticsindustry.org/outreach/recycling/2124.htm. Accessed May 30, 2007.
9. L. Erwin and L. H. Healy, Jr., *Packaging and Solid Waste Management Strategies*, American Management Association, New York, 1990, p. 37.

General References

R. J. Kelsey, *Packaging in Today's Society*, St. Regis Paper Company, 1978.

S. Levy and J. H. DuBois, *Plastic Product Design Engineering Handbook*, Van Nostrand Reinhold, New York, 1977.

The Society of the Plastics Industry—Web site: http://www.plasticsindustry.org/.

ASTM International—Web site: http://www.astm.org/.

The Association of Postconsumer Plastic Recyclers—Web site: http://www.plasticsrecycling.org.

L. Erwin and L. H. Healy, Jr., *Packaging and Solid Waste Management Strategies*, American Management Association, New York, 1990.

S. Selke, Ph.D., *Packaging and the Environment*, Technomic Publishing Inc., Lancaster, PA, 1990.

J. Hanlon, *Handbook of Package Engineering*, second edition, Technomic Publishing Co., Lancaster, PA, 1992.

A. Mandel, “Bottle Design, Plastic” in *The Wiley Encyclopedia of Packaging Technology*, 2nd edition, John Wiley & Sons, New York, 1997, p.93.

A. Mandel, “Packaging Beer in Plastic Bottles,” Teltech online article, May 1999.

BOXES, CORRUGATED

Gene A. Foster
Middlesex Container Company,
Inc., Milltown, New Jersey
Updated by Staff

INTRODUCTION

Corrugated containers (erroneously termed *cardboard boxes*) became the shipping package of preference in the early 1900s as a replacement for wooden crates. Corrugated fiberboard packaging is, in terms of tonnage, by far the most common type of paper and paperboard-based packaging (1).

The corrugated shipping container and related inner packaging is multifunctional. Its varied uses include wrapping, enclosing, protecting, cushioning, indexing, stacking, and displaying. The basic function of the packaging is to protect the product during distribution until the product is removed from the package. The growing use of palletization in warehousing and distribution requires corrugated boxes with good stackability. Corrugated board is an appropriate material for obtaining high stackability. Product containability and cost-effective adaptation to logistics systems are important issues in corrugated-board transport design. Today's packaging is used not only for protection, but also for promotional and adverstising support. It is a communication medium carrrying information and artwork. Printing quality has been developed to meet these needs (1).

RAW MATERIALS

Kraft linerboard derives its name from the Swedish word *kraft*, meaning strength. It is produced for its facial stiffness (stackability) and puncture resistance. These characteristics are achieved through use of soft-wood fibers that are long and resilient. Linerboard becomes the facings of corrugated board.

The basic raw material for liner is cellulose fiber extracted from wood chips. The chips are digested in a cooking liquor to remove lignin and resin, leaving the fiber that is fibrilated to enhance the tendency for the fibers to mat together. The fibers are pulped with water and spread onto the screen of a Fourdrinier paper machine. Water is drained, leaving the mass of fiber to form a sheet of paper that is dried and wound into rolls. Many Fourdrinier machines are over 20 ft (6 m) wide. Linerboard is graded by *basic weight*, which will be explained in the section on liner grades.

The natural color of pulp is tan or kraft. A small percentage of the pulp is bleached white in a chlorine bath and then converted into fully bleached white paper. Bleached white pulp is also furnished as a topping for kraft liners to produce mottled white linerboard. Paper mills sell linerboard to corrugated converting plants in units of tons.

The medium is the paper rollstock that is converted into the fluted portion of corrugated board. The medium is also known as “nine point” because it calipers 0.009 in. It is also termed “semichem” because the pulp is cooked with chemicals and then mechanically ground into fibers. The pulp, like linerboard, is converted into paper on the Fourdrinier machine; however, pulp for the medium is selected from hard-wood trees that have short fibers that hold a set better when they are steamed and fluted on the corrugator. Technical advances have made possible the use of roots and recycled containers as percentage additives to medium stock. Recycled fiber from recovered paper and board is a major source of fiber for the corrugating industry.

The universal weight for the medium is 26 lb/1000 ft^2 (11.7 kg/90 m^2); however, minimum quantities (33 and 40 lb) of medium are used to improve flat crush, stacking, and moisture resistance in finished board.

Adhesives

Contemporary corrugator adhesives are starch-based with additives and are selected for their flow, tack, absorbtion, evaporation, and set qualities. Specialty additives may be blended with the base adhesive to improve wet strength and moisture resistance. Borax is added because it causes the starch to become a more highly branched polymer chain with higher viscosity and tack (1). Modern corrugators use as little as 2 lb (0.9 kg) of adhesive per 1000 ft^2 (90 m^2) to combine single-wall board. Fingerless single-facers have eliminated the old problem of adhesive buildup lines (finger lines) in the finished product. The manufacture of corrugator adhesive is highly technical and is controlled through a series of extreme specifications.

Joint adhesives can be plastic based hot melts or starch-based cold melts. Both are used successfully to produce high-speed manufacturer's joint closure (see Adhesives).

Inks

Are a product of earth elements and chemical formulations. The base carrier for modern flexographic printing inks is water laced with additives designed to enhance drying speed, produce image clarity, inhibit smearing, and eliminate spotting or blotching. Inks must be carefully scrutinized for their pH factor because acidic inks differ in performance from base inks. For example, basic inks tend to smear. Ready-to-run inks are supplied to the corrugated printers in drums of 50-lb (22.5-kg) pails. In-house ink kitchens afford the converting plant the flexibility of mixing raw materials delivered from the ink manufacturers into custom batches in which the corrugated printers can control tones, viscosities, additive selections, and many other custom characteristics that will enhance the final printed image (see Inks).

The industry's modern ink kitchens use the Pantone Matching System (PMS) Service. An endless range of available ink colors has been opened up. The color of the print is measured by the CIE system.

Printing Plates

Modern printing plates are supplied to the corrugator mounted on poly backing, ready to be locked into the press. The industry has moved from a rather slow, methodical art form to a highly technical and efficient producer. The engraved rubber plate (die) has been replaced by a photopolymer plate that is rapidly produced through a series of computer imaging, and photoprocessing. The photopolymer plate is presently subject to ultraviolet (UV) deterioration; however, chemical suppliers of the base poly material will solve this problem soon.

Cutting Dies

Corrugated products with scores or slots with angles other than 90° must be die-cut. Cutting dies are produced for the purpose by imposing an image onto a plywood sheet, jigsawing or laser-cutting the imaged lines, and filling the eradicated space with a cutting knife or scoring rule as desired. The dies are made on curved or flat plywood, depending on the style of diecutter to be used. Stripping forms accompany cutting dies if they are to be used on automatic equipment.

Labels

High-graphics products incorporate the use of labels in conjunction with or in lieu of printing. Labels are supplied to the corrugated converters by label manufacturers. Typical specifications requested for labels are number of printed colors, paper basis weight, stock color, finish, and grade. Labels are adhered to the corrugated stock manually, semiautomatically, or fully automatically.

Additives

Finished corrugated blanks may be treated by many additives or coatings to improve water repellency, scuff resistance, and petrochemical resistance. Waxes and polymers are favored additives.

BOARD CONSTRUCTION

Corrugated board is a sandwich of one or more linerboard sheets adhered to a fluted medium. Single-face construction incorporates one linerboard adhered to the medium. Double-face, better known as *single-wall*, has a linerboard adhered to both sides of the medium. Additional media and linerboards yield double-wall and triple-wall (see Figure 1).

Combinations of linerboard grades and flute configurations are used to generate the many variations of corrugated board. Liner weights are increased to improve board bursting and stacking strength, and flutes are modified to accommodate various compression, stack, and printing

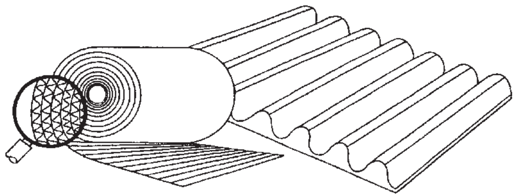

Single face corrugated

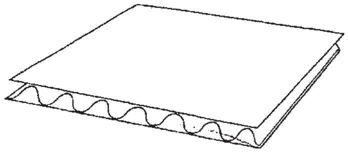

Single wall corrugated
(also known as double faced)

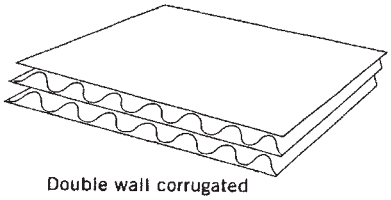

Double wall corrugated

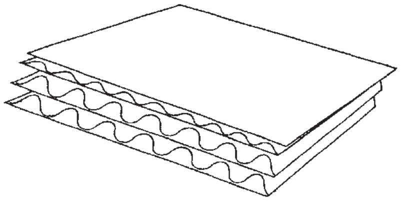

Triple wall corrugated

Figure 1. Various examples of corrugation.

features. Two important requirements of corrugated board are flat crush and stacking strength. *Flat crush* measures the pounds per square inch (psi) resistance to pressure applied at a 90° angle to a horizontal sheet, thus establishing the rigidity of the flute structure. This property is changed by varying the flute outline and linear density. It can also be revised by changing the basis weight of the fluted medium. Flat crush supplies the internal resistance to squeezing forces such as feed rollers in presses and gluers. It also supplies resistance to gravitational forces imposed upon bottom sheets in stacks and bottom cartons in units.

Stacking strength measures the ability of a vertical panel to resist bowing, buckling, or collapsing from pressure exerted in line with that panel. This is regulated by varying the linerboard weights, changing flute heights, or both. Stacking strength is probably the most sought-after characteristic in corrugated cartons.

Flutes

Flutes are most essential to the characteristic of corrugated board. They supply the rigidity to the board that imparts strength with minimal weight and density. Fluting makes the product economical. Flutes are designed by height (thickness) and density (number per linear foot). Higher flutes produces a physically stronger columnar stack in line with the flutes. Denser flutes—that is, flutes that present more images per linear foot—produce more resistance across the flutes. C is the most used flute size, followed by B and E. The C flute is considered a compromise between A and B. Other, minimally used flutes include J (jumbo), which is larger than the others, as the name suggests; S flute; and F flute, which is the lowest flute height.

Higher (less dense) flutes in addition to stacking strength provide softer cushion characteristics, while lower (more dense) flutes provide greater flat crush resistance, smoother print surfaces, and crisper score lines. Flutes are often used in combinations such as BC double wall, which provides an overlap of required characteristics. B and C flutes are the most commonly produced flutes, and E is considered sparingly. Flute selection is determined by shipper needs. A fragile-decorations shipper would choose C flute for its stacking strength and cushioning qualities. A canned beverage filler would choose B flute for its end-to-end compression attributes; and a point-of-purchase display designer would select E flute for its superior printing surface. (See Table 1.)

MULLEN VERSUS EDGE CRUSH

Carrier regulating agencies require a board upgrade to accommodate increased loads and increased box sizes analogous to the idea that a 3/4-in. (19-mm) plywood sheet is stronger than a 1/4-in. (6.35-mm) sheet. Paper mills fulfill this requirements by producing various-weight liner grades, corrugated converters combine board using proper heavier grades to accommodate the need for stronger containers.

Liner Grades

The universally accepted test for corrugated board has been the *Mullen test* (TAPPI test method T-810), which measures the resistance of the board to withstand a puncturing pressure measured in pounds per square inch (psi) or metric kilopascals (kPa). Linerboard grades have been manufactured to meet specific Mullen requirements. Increased Mullen demands increased linerboard strength, which is accomplished by increasing the mass of the linerboard measured in pounds per thousand square feet (lb/1000 ft^2) (kg/90 m^2).

A major modification to containerboard was initiated in the 1980s, when paper mills developed a process that enhanced linerboard material, giving it an ability to withstand crush or compression examinations at lower basis weights. Table 2 compares STFI crush performance of standard to high-performance liners. Note the improved STFI in high-performance liner.

The product *high-performance linerboard* provides a serious potential for user satisfaction and improved economics. New linerboard concepts prompted the corrugated industry trade associations to sponsor proposals to truck- and rail-carrier committees to consider classifications recognizing edge crush as a test criteria. Proponents for the new test methods argued that edge crush is more customer-oriented and that it permits more latitude for manufacturers to design and supply boxes that meet customer performance criteria. Rules committees of truck and rail carriers accepted the proposals, and in 1991 they approved the edge-crush test (ECT) as an alternative test method for containerboard.

Edge-crush Test

This measures the resistance of the *containerboard* to edgewise compression. Ring-crush and STFI tests measure the resistance of the *linerboard* and medium. These tests are performed to give the linerboard and corrugated manufacturers relative material comparisons. The

Table 1. Standard U.S. Corrugated Flutes[a]

Flute Designation	Flutes per Linear Foot	Flutes per Linear Meter	Flute Thickness, in. (mm)	Flutes per Cross Section
A flute	33±3	108±10	3/16 (4.8)	
B flute	47±3	154±10	1/8 (3.2)	
C flute	39±3	128±10	5/32 (4.0)	
E flute	90±4	295±13	1/16 (1.6)	

[a] Corrugator equipment manufacturer's single-face flute roll dimension may vary slightly to accommodate user preference.

Table 2. STFI Crush Performance of Standard to High-Performance Liners

Liner Basis Weight		STFI	
lb/1000 ft^2	(kg/90 m^2)	lb/in. width	(kg/cm width)
26	11.8	12	13.9
33	14.9	15	17.4
38	17.2	17	19.7
42	19.0	19	22.0
69	31.2	29	33.6
90	40.7	38	44.0
Medium-Performance Liner			
26	11.8	11	12.8
33	14.9	15	17.4
40	18.0	19	22.0
High-Performance Liner			
35	15.8	20.3	23.6
45	20.3	27.5	31.9
57	25.8	33.7	39.1
72	32.6	45.0	52.2

edge-crush test includes the value of the medium's resistance to compression as well as the linerboard. It should be noted that these tests can, and are, performed on standard weight liners as well as on high-performance liners (see Edge-crush concept).

Medium Grades

General industrial principle requires use of the same medium weight (26 lb/1000 ft^2) (11.7 kg/90 m^2) for all board grades; that is, liner weights change to generate increasing board tests, but the medium remains the same. There are some approved exceptions that call for upgrading medium to improve flat crush and moisture resistance. Two upgraded medium weights are 33 and 40 lb.

REGULATIONS

Freight carriers and government agencies control the regulations for the container industry. The major regulation is encompassed in Rule 41 (*Uniform Freight Classification*) established by the National Railroad Freight Committee (2). This regulation is closely paralleled by Item 222 (National Motor Freight Carriers). Table 3 outlines minimum standards. Triple-wall and solid-fiber standards have not been included in this chart.

Rules prescribed by these agencies outline requirements that determine proper liner weights and manufacturing specifications. All corrugated boxes made to conform to the regulations carry a printed certificate identifying the boxmaker and appropriate board grade as shown in Figure 2. Note the apparent difference between the burst-test and the edge-crush certificates.

Table 3. Minimum Standards for Construction of Corrugated Boxes[a]

		Table A		Table B
Maximum Weight of Box and Contents, lb (kg)	Maximum Outside Dimensions, Length, Width, and Depth Added Inches (cm)	Minimum Bursting Test, Single-Wall, Double-Wall, psi (See Note 1) (MPa)	Minimum Combined Weight of Facings, Including Center Facing(s) of Double-Wall, lb/1000 ft^2 (g/m^2)	Minimum ECT, lb/in., Width (See Note 2) (kg/cm width)
Single-Wall Corrugated Fiberboard Boxes				
20 (9)	40 (102)	125 (0.862)	52 (254)	23 (26.3)
35 (16)	50 (127)	150 (1.034)	66 (322)	26 (29.7)
50 (22)	60 (152)	175 (1.206)	75 (366)	29 (33.1)
65 (29)	75 (190)	200 (1.379)	84 (410)	32 (36.5)
80 (36)	85 (216)	250 (1.723)	111 (542)	40 (45.7)
95 (43)	95 (241)	275 (1.896)	138 (674)	44 (50.3)
120 (54)	105 (267)	350 (2.412)	180 (879)	55 (62.8)
Double-Wall Corrugated Fiberboard Boxes				
80 (36)	85 (216)	200 (1.379)	92 (449)	42 (48)
100 (45)	95 (241)	275 (1.896)	110 (537)	48 (54.9)
120 (54)	105 (267)	350 (2.412)	126 (615)	51 (58.2)
140 (63)	110 (279)	400 (7.757)	180 (878)	61 (69.6)
160 (72)	115 (292)	500 (3.445)	222 (1084)	71 (81.1)
180 (81)	120 (305)	600 (4.135)	270 (1318)	82 (93.6)

[a] *Note 1*—Burst test: (*a*) Tests to determine compliance with the bursting test requirements of Table A must be conducted in accordance with Technical Association of Pulp and Paper Industry (TAPPI), Official Test Method T-810; (*b*) a minimum of six bursts must be made three from each side of the board, and only one burst test will be permitted to fall below the specified minimum value. Board failing to pass the foregoing test will be accepted if in a retest consisting of 24 bursts (12 from each side of the board), not more than four burst tests fall below the specified minimum value. *Note 2*—Edge-crush test: (*a*) Tests to determine compliance with the edge crush requirements of Table B must be conducted in accordance with Technical Association of Pulp and Paper Industry (TAPPI), Official Test Method T-811; (*b*) a minimum of six tests must be made and only one test is permitted to fall below the specified minimum value, and that one test cannot fall below the specified minimum value by more than 10%. Board failing to pass the forgoing will be accepted if in a retest consisting of 24 tests, not more than four tests fall below the specified minimum value, and none of those tests fall below the specified minimum value by more than 10%.

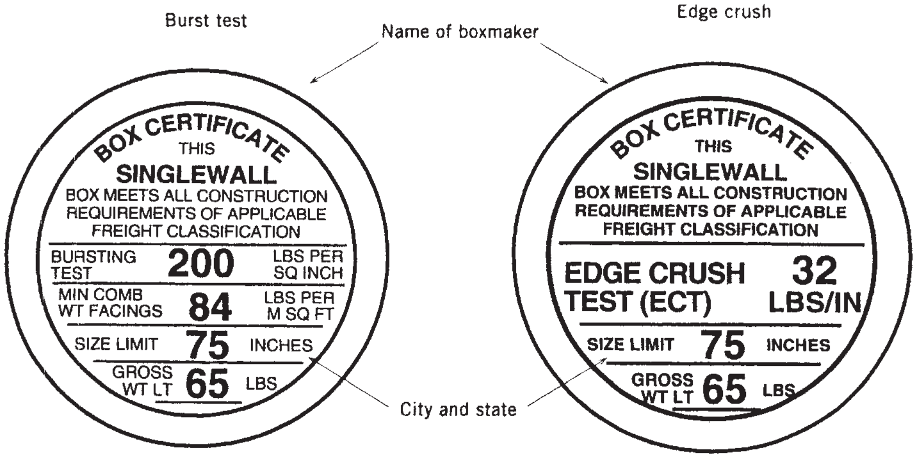

BOX CERTIFICATE
THIS
SINGLEWALL
BOX MEETS ALL CONSTRUCTION
REQUIREMENTS OF APPLICABLE
FREIGHT CLASSIFICATION
BURSTING TEST 200 LBS PER SQ INCH
MIN COMB WT FACINGS 84 LBS PER M SQ FT
SIZE LIMIT 75 INCHES
GROSS WT LT 65 LBS

BOX CERTIFICATE
THIS
SINGLEWALL
BOX MEETS ALL CONSTRUCTION
REQUIREMENTS OF APPLICABLE
FREIGHT CLASSIFICATION
EDGE CRUSH TEST (ECT) 32 LBS/IN
SIZE LIMIT 75 INCHES
GROSS WT LT 65 LBS

Figure 2. Boxmaker certificate.

Several other regulatory agencies are included depending on shipper requirements, including

Department of Transportation—Code of Federal Regulations No. 49 (Transportation)-Pointing specifically at hazardous materials

International Air Transport Authority (IATA)—concerned with air transport

International Maritime Authority—water cargo

United Parcel Service (UPS)—ground deliveries of <150 lb

U.S. Postal Service—Domestic Mail Manual

CONVERTING OPERATIONS

Corrugated fiberboard boxes are manufactured in a corrugated board plant or in a sheet feeder plant. The corrugated board plant consists of the corrugator, which produces flat sheets of corrugated fiberboard, and the converting equipment where the corrugated sheet is converted into corrugated board boxes by printing, cutting, scoring, and gluing. Sheet feeder plants are smaller factories that convert board into packaging for shorter run length orders, for quick deliveries, and for a local market.

Contemporary box plants vary widely in size and capability. A small sheet plant may ship one truckload of cartons per day while the megacontainer plant will ship 50 truckloads per day. Corrugated requirements are so diverse that a wide variety of company sizes is a desirable asset to the industry.

Corrugator

This is the major piece of equipment in a box plant. The machine converts mill-supplied roll stock (linerboard and medium) into flat sheets. It varies from 50 to 100 in. plus (12.7–25.4 m) in width, and most are over 300 ft (91.5 m) long. Wide computer-managed corrugators operating at speeds of up to 1000 lineal feet per minute are capable of producing four truckloads of corrugated board per hour.

The single-facer (wet end) of the corrugator converts the medium into fluted paper and adheres it to the inside liner of the corrugated sandwich. Next, a double backer roll is applied as the outside liner, and finally the sandwich is run over dryer plates and delivered to the dry end. Cross-corrugation scores may be applied and the board is trimmed into two-dimensional blanks in preparation for delivery to the plant for further conversion into a box.

Scheduling (trimming) a corrugator requires skill and training because variations of liner combinations, quantity requests, and blank dimensions are endless. Modern computer-trimmed corrugators are capable of producing several hundred setups per day.

Printer-Slotters

These machines print, slot, and score flat banks in preparation for folding and joining into finished boxes. Sized blanks are delivered from the corrugator prescored for flap and depth dimension. The operator, generally one of a two- or three-worker crew, sets scoring and slotting heads at proper dimensions to cut required length, width, and joint dimensions into the carton. The operator then hangs the premounted printing plates on the print cylinders, fills the ink wells with desired colors, and begins production.

These machines are referred to by the number of colors they are capable of printing in one pass plus cylinder diameter and machine width. Small-dimension machines are obviously better suited for producing small boxes, and so on. A majority of presses today are two-color; however, presses in up to six colors are available.

Corrugated printer-slotters are letterpress printers; however, most current equipment is a flexographic variation that incorporates the use of an analox roller with water-base inks versus the old doctor and impression rollers with oil-based ink. Flexographic printing offers many advantages over letterpress, including operating speed, clarity, registration, trapping, drying, and cleanup. Printer-slotters employing flexographic printing can produce an average size-box (e.g., a 24/12-oz beverage box) at approximately 15,000 per hour.

Flexofolder-Gluer

The Flexofolder-Gluer (FFG) incorporates the addition of an automatic folder–gluer system with the printing unit, which permits the completion of most cartons on one machine. The equipment has been available since the 1960s, when flexographic printing with high-speed drying made it possible for cartons to be folded immediately after printing without smearing. These machines may also be equipped with automatic bundeling and unitizing systems. The most advanced FFG can run up to speeds of 26,000 boxes per hour. Boxes can be produced for any application.

Folder–Gluers

These are designed to finish boxes in a straight line or right angle. Both are extremely efficient at folding panels and applying adhesive to produce finished cartons that require minimum or no final sealing. Predecorated, slotted, and or die-cut blanks are belt fed through the folding sections; glue is applied at required spots; and finished cartons are stacked at the finish end. Most equipment is designed to accept a wide variety of sizes both in the machine direction and across the machine.

Die Cutters

Die cutters are required for all parts that are scored or slotted other than 90° or in line with press direction. Intricate die cut interior parts and box designs are a very common part of the industry.

Flatbed die cutters are designed to produce accurate products. They vary from small hand-fed machines that are limited in speed to the operators performance (about 500 blanks per hour) to high-performance automatic equipment that include multicolor printing selections. Flatbed cutting dies are reasonably priced. The process for flatbed die cutting closely resembles cookie cutting. The die board is locked into a chase that holds it in a firm position. Corrugated board is registered under the die; and the machine is closed, striking the die impression into the board.

Rotary die cutters are best used to produce parts at high speeds. They are not as accurate as flatbed machines; however, they can be designed to accept large blanks. Rotary cutting rule is inserted into curved plywood and then locked onto the die-cutting cylinder. An impression is made into the board when a blank is passed between the cut die cylinder and an opposing thick polyblanketed impression cylinder.

Slitters

Slitters have a series of wide rotating shafts to which scoring and slitting collars (heads) are attached. These heads can be moved by the operator to change dimensions. Most slitters are manually fed; however, some are equipped with automatic feed sections. Slitters are used to reduce large sheets to smaller blank dimensions, add scores to existing blanks, and prepare small runs for further processing. Slitters are very versatile machines. Small sheet plants may be totally equipped with a slitter a printer–slotter and a taper.

Partition Slotters

These machines slot corrugated pads in preparation for assembly into partitions.

Partition Assemblers

These machines automatically assemble slotted racks into cell-divided partitions for use in separating delicate parts such as glass bottles.

Tapers

These machines apply tape fed from rolls onto prefolded cartons to form a manufacturer's joint. Standard tape widths are 2 in. (5.08 cm) or 3 in. (7.62 cm). Tapers are handfed semiautomatic or hopper-fed automatic. The machine is an economical piece of equipment that can be adjusted and set very quickly. Taped joints represent a minimal amount of todays production because of their relatively slow production speeds and higher costs compared with glued joints. Glued joints also perform better in regulatory transit tests.

Stitchers

These devices apply staples cut from a roll and are driven into the joints of prefolded boxes. Stitched joints have limited use in today's market; they are used mostly with government-grade boards and specialty wet-strength containers.

Coaters

These machines are operated at box plants or, in many cases, at specialty plants that process coatings on finished containers. These specialty plants function as a separate entity to the corrugated industry; that is, they seek customers for their process, mostly from the fish, poulty, and produce industries; purchase finished containers from corrugated converters; and add the required coatings (waxes and plastics) to the containers. The industry specializes in wet-strength and moisture-barrier containers.

Curtain coaters feed box blanks under a curtain of liquid coating (molten poly) that coats one side of the blank and passes it to a drying section. Some coaters are capable of flipping the blank to deposit a coating on both sides. *Cascaders* pour wax coatings onto finished containers. *Wax dippers* immerse finished containers into tanks of molten wax and then hang them to dry. The process looks very much like your local laundry.

Laminators

Litholaminators have become an important adjunct to the high-graphics corrugated producer. This equipment rolls adhesive onto a printed litholabel, registers the label under the substrate, drops the substrate onto the label, and rolls the combined stock to achieve 100% adhesion and eliminate air bubbles. Litholaminators are designed to feed flat banks, including joined (knocked-down) boxes.

Stock-laminators are designed to laminate varied substrates together to achieve added thickness or uncommon stock variations. They simply pass a flat blank over a surface roll that is revolving in a pan filled with adhesive, register the now adhesive coated substrate with a second substrate, and pass the combined sheet through compression rollers. The finished product is usually stacked immediately, flipping every other handful to reduce warp. Single-face laminate is a is a hybrid process that begins as a traditional fluted medium adhered to a single linerboard; but in the place of a second board, a preprinted sheet of paperboard is laminated to the outer surface.

Miscellaneous Equipment

A well-equipped corrugated plant will require additional materials handling and finishing equipment, including lift trucks, conveyors, bundelers, unitizers, bailers, load turners, eccentric slotters, quick sets, strippers, and band saws, plus many custom machines such as riviters.

MANUFACTURER'S JOINTS

Joints applied by the corrugated manufacturer provide the most practical way to convert a two-dimensional product into a third-dimensional one. *Manufacturer's joints*, as the name implies, are created by the box manufacturer. Box users torque containers open, fill them, and seal them closed by gluing, stapling, or taping. Edges that meet during closure are called *seams*.

Joints are glued, taped, or stitched. Glued and stitched containers employ a 1 1/4-in. lap that is a contiguous part of a length or width panel that will be glued or stitched to the opposing panel when the panels are folded to meet. Glued joints became the joint of preference in the 1960s. Almost all high-speed flexo presses and folders are equipped to run glued joints. Some volume box users are equipped with wraparound machines that fold flat blanks around a product and seal joints and seams in place. This process eliminates the need for a manufacturer's joint from the box manufacturer, which in some cases saves cost and in all cases produces a more tightly wrapped package. Stitching is not used in food packaging products.

Glued and stitched joints are produced with the lap on either the inside or the outside of the container. Both have their advantages. Inside laps present a finished outside edge that presents a better appearance and allows more print area. Outside laps leave a smooth surface on all four inside panels of a carton. (See Figure 3.)

DIMENSIONING

Three-dimensional cartons are designated by length × width × depth. Length and width are the longer and shorter dimensions of the opening of a box, and depth is the third dimension. Two-dimensional parts are designated by supplying the flute direction as the first dimension. Dimensions can be specified for either the inside or the outside of a box. Accurate inside dimensions must be determined to ensure the proper fit for the product being shipped or stored. At the same time, palletizing and distributing the boxes depends on the outside dimensions. The box manufacturer must be informed as to which dimension is most important to the customer (3).

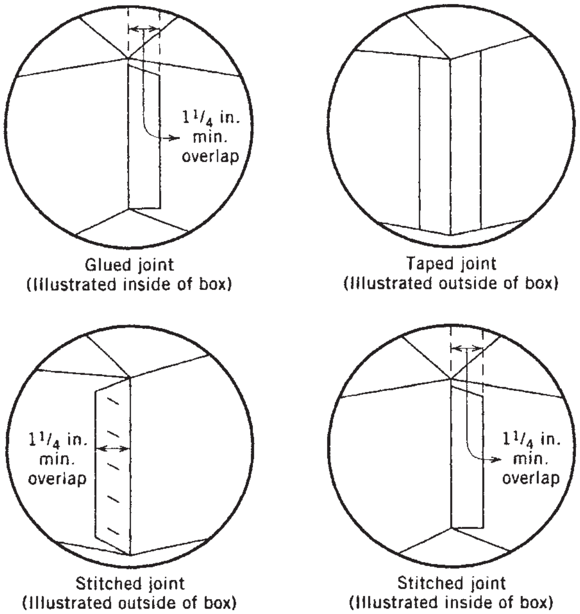

Figure 3. Examples of joints.

Corrugated board has a definite caliper, which was noted in Figure 1; consequently, scoring allowances must be considered when dimensioning boxes and interiors. One-half thickness of board is lost for each 90° bend. See an example in Figure 4.

CORRUGATED ECONOMICS

Carton economics demands that solid geometric figures (pertaining to three dimensions, $L \times W \times D$) must be reduced to plain geometric figures (pertaining to two

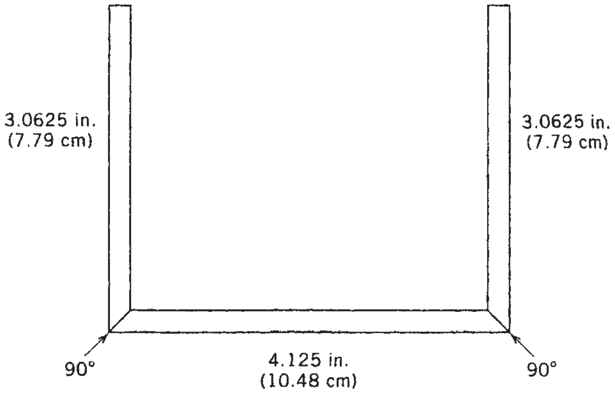

Figure 4. Score and fluting. Score B flute 1/8 in. (3.175 mm) thick at 3 1/16 in. × 4 1/8 in. (7.79 cm × 10.48 cm × 7.79 cm) to achieve inside dimensions of 3 in. × 4 in. × 3 in. (7.62 cm × 10.16 cm × 7.62 cm).

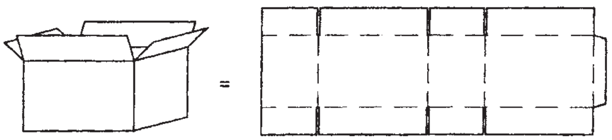

Figure 5. Example of reduction to plain geometric figure.

dimensions, $L \times W$) for manufacturing specifications and cost analysis. (See Figure 5).

Having established the single-plane dimensions of a container ($L \times W$), the area per piece can be established. This area is calculated in square inches per piece, which is generally referred to in square feet per 1000 blanks, that is, L in. × W in. divided by 144 × 1000 = square feet (ft^2)/1000 pieces.

Corrugated box costs are functions of *raw material*, plus manufacturing, administrating, and delivering costs; consequently, a major objective in box design is to maximize fill area and minimize the blank dimension required to do so. Several principles to consider that will accomplish this maxim follow:

1. The most economical RSC (regular slotted container) formula is $L = 2W = D$.
2. Rectangular RSCs are more economical than square RSCs.
3. Square tubes are more economical then rectangular tubes.
4. Width is the least economical dimension of an RSC.
5. Depth is the most economical dimension of an RSC.

BOX STYLES

Box styles and interiors are too numerous to discuss in this article, and can best be referred to in the *Fibre Box Handbook* (4). Most designs are designated by their closure feature. The most used box is the *regular slotted container* (RSC), which features the most economical use of board from the corrugator. All flaps are equal in depth, and the width of the outer flaps equals one-half that of the containers, so they meet to form a seam at the center of the box when folded. An alternative to the RSC is a wraparound design. The manufacturer supplies a flat blank to the packer. This is folded around the product and overlap is sealed. One-piece packaging to meet specific market needs, such as the carry-home pack for bottles of wine, shows considerable design ingenuity (1).

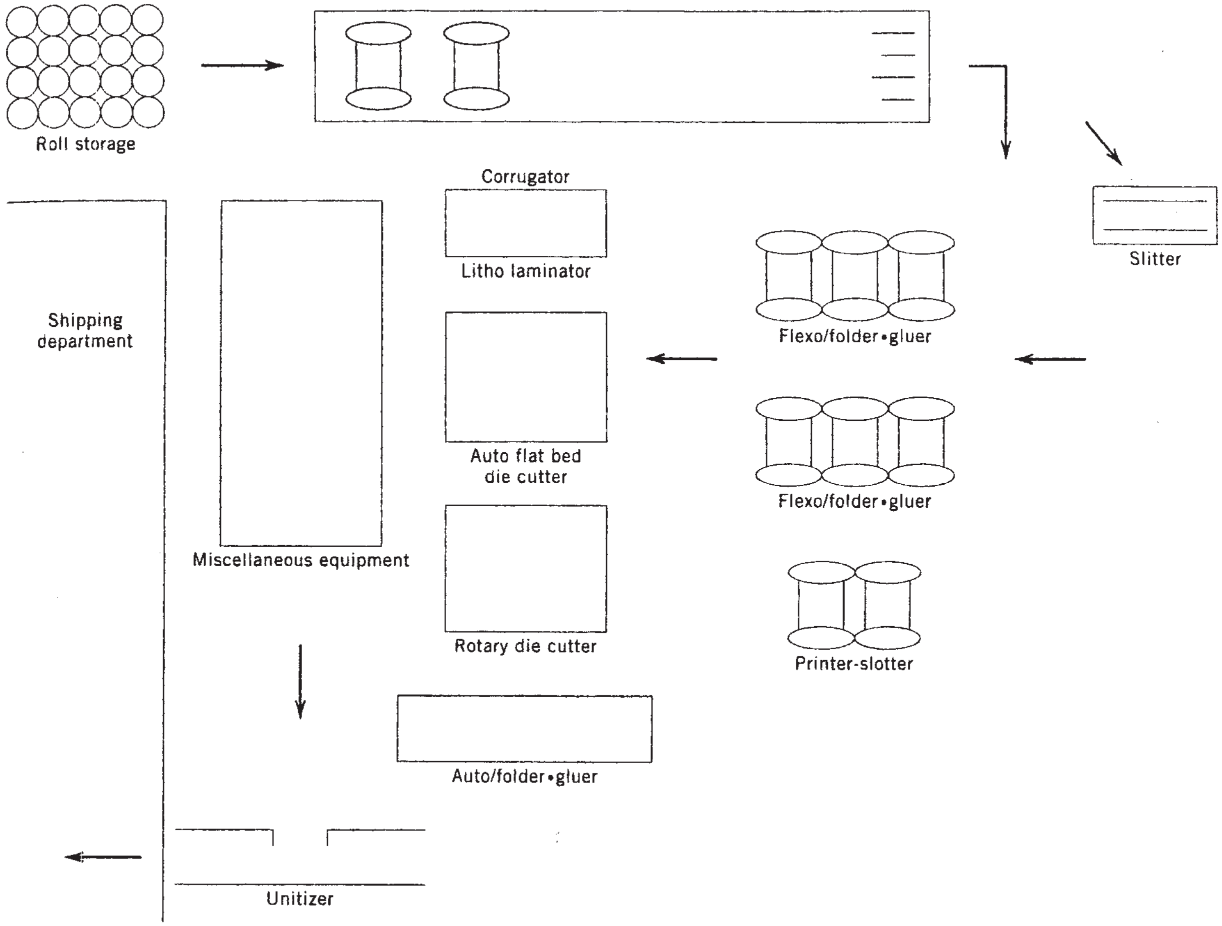

Figure 6. Typical plant floorplan.

Carton designers using CAD/CAM computer programs generate intricate new designs that enhance packing programs and support marketing schemes. Today's world of discount stores requires containers that function as sales tools that fully describe the product enclosed as well as protecting the product for delivery to the consumer.

RECYCLING

Corrugated material, made from a natural renewable resource, is frequently manufactured from recycled fiber, is often reused many times, and then is recycled for use in other packaging materials. Used corrugated containers are very adaptable to recycling; in fact, they represent the major source of recycled paper today. Over 76% of recycled containers are reclaimed for paperboard used to make more corrugated boxes (5). Box manufacturers have learned to make stronger boxes using less raw material. This is called source reduction. Corrugated packaging also allows for significant source reduction by eliminating the need for overwraps and secondary packaging (5). The industry is working on problems that occur during the repulping process. New adhesives are being developed that will help prevent "stickies" from forming that can clog the papermaking equipment. Stickies can originate from wax coatings, labels, and adhesives. Figure 6 illustrates a rough floorplan of a typical box plant.

INDUSTRY FUTURE

The corrugated industry is mature, meaning that it has developed a full share of the possible market and that most volume advances come through volume increase in existing markets. An unavoidable outcome of the globalization of the world economy is an escalated need for distribution of goods in terms of ready-made products from the globabl enterprise to its customers in the global market as well as extensive transport of materials, parts, and subsystems from external and/or internal suppliers to assembly plants. Effective packaging and logistics solutions have become key factors in order to maintain or improve competitiveness of these enterprises. These patterns also affect national and small- to medium-sized enterprises. A significant driving force is the quest for the optimal package. It is not only necessary that the package provide fundamental functions, but also that it be accomplished at the lowest possible cost with a minimum of environmental impact. A key factor is to minimize the mass of the package. A benefit to the industry would be the reduction of the amount of raw material used. An additional important factor is to realize that in the future the sources of raw materials may change and vary in quality. These factors emphasize the necessity to use effectively the fiber strength of the raw material, and current research is aimed in this direction (6).

Undoubtedly the most beneficial adjustment the consumer will receive is the move to high-performance linerboard and the corresponding change from burst test to edge-crush test. This very significant change will ultimately result in not only lower direct costs but also lower freight and handling costs. The combination of stronger paperboard at lower basis weights will also result in a reduction of waste tonnage and pulp consumption. High-performance linerboard will improve machine efficiencies and printing capabilities.

High-graphics containers are claiming a larger share of the market. Packagers are accepting the corrugated container as a sales tool in addition to its use as a shipping container. Exotic labeling equipment and preprinted liner laminates are becoming more common to the industry, and the trend continues toward faster in-line converting machines that incorporate printing, slotting, die cutting, folding, and gluing into one piece of equipment.

BIBLIOGRAPHY

G. A. Foster, "Boxes, Corrugated" in *The Wiley Encyclopedia of Packaging*, 2nd edition, John Wiley & Sons, New York, 1997, pp. 100–108.

Cited Publications

1. J. Poutis, "Corrugated-Fibreboard Packaging" in M. J. Kerwin, ed., *Paper and Paperboard Packaging Technology*, Blackwell Publishing, Oxford, 2005.
2. *Uniform Freight Classification 6000-F*, National Railroad Freight Committee, Chicago.
3. "All About Corrrugated," *Corrugated Packaging*, www.corrugated.org/basics. Accessed April 2008.
4. *Fibre Box Handbook*, Fibre Box Association, 2850 Golf Road, Rolling Meadows, IL.
5. "Recycling," *Corrugated Packaging*, www.corrugated.org/recyling. Accessed April 2008.
6. G. Jonson and co-workers, *Towards an Increased Utilization of Fibre Strength in Box Production-Project Summary*, Division of Packaging Logistics, Lund University, Sweden, 2005.

BOXES, RIGID, PAPERBOARD

Larry Lynch
Julia Anderson
National Paperbox and
Packaging Association
Updated by Staff

INTRODUCTION

Rigid-paperboard boxes are also called "setup" boxes. Unlike folding cartons (see Cartons, Folding), they are delivered to the packager setup and ready to use. The rigid box was originally used by the Chinese, who were among the earliest to discover a process for making strong and flexible paper from rice fiber. The first known use for a paper box was tea. The word *box* generally means a receptacle with stiff sides as distinguished from a basket, and boxes were so named because they were first made from a tree called *Box* or *Boxwood*.

Boxes for gift-giving became popular over 2000 years ago when the Roman priests encouraged people to send presents during the seasons of rejoicing. The paperboard box of current use originated in the 16th century, with the invention of pasteboard. In Europe, one of the earliest types of paper boxes was commonly known as a *band box*. It was a box highly decorated by hand and was used to carry bands and ruffles worn by the Cavaliers and Ladies of the Court. It was not until 1844 that setup boxes were manufactured in the United States. Starting with a machine that cut the corners of the box, Colonel Andrew Dennison soon found that manufacturing boxes by hand was tedious work and developed the Dennison Machine, which led to the creation of the Dennison Manufacturing Company. The Colonel's invention was revolutionary, but until the Civil War, most consumer products were packaged in paper bags or wrapped in paper. There were only about 40 boxmakers in the country, and most boxes were made by hand. For these 40 craftsmen the box business was merely an adjunct to other lines of business, which varied from printing to the manufacture of the consumer items they would eventually pack.

In 1875, John T. Robison, who had worked with Colonel Dennison and others, developed the first modern scoring machine, corner cutter, and shears. These three machines still form the machinery basis for most box shops, but it was not until the end of World War II that significant progress was made to improve the production of machinery for the industry. Today's machinery takes a scored piece of blank boxboard through to the finished covered box.

DESIGN

A defining characteristic of the rigid box is the freedom it allows with respect to shape, materials, use of accessories, and overall presentation (1). Rigid boxes may be large, small, square, rectangular, or elliptical in shape. The basic form is the lift-off-lid box. Examples of other forms are the shell and slide book style, combining trays with different hinged lids (for jewelry boxes) and combining rigid board jackets with pockets for DVDs. The two major factors in the appeal of the rigid box are quality and perceived luxury. In marketing terms, a product must be shown to its best advanatage. This is sometimes achieved by making the product visible, especially when displayed at the point of purchase. More is usually achieved by graphics, window patching, and the use of transparent plastic lids (2). A simple lift off box with good graphics may be enough of an appeal, but a round, oval, or heart-shaped box may be required for packaging chocolates.

MANUFACTURING PROCESS

The process starts when sheets of paperboard, made principally from recycled fibers, are sent through a machine known as a *scorer*. The scorer has circular knives that either cut through or partially cut through the paperboard and form the box blanks from the full sheet. The scorers must be set twice, once for the box and once for the lid, since there is usually a variation of 1/8–3/8 in. (3.2–9.5 mm) between the box and the lid. After the individual box blanks are broken from the full sheet, they are stacked and prepared for corner cutting. Once the corners are cut, the basic box blank is ready. Die cutting, usually performed on a platen press and an alternative method of cutting blanks, is economically justifiable for large orders.

The blanks are now ready for staying. For small quantities the box blanks can be sent through a single stayer where an operator must first bend all four sides of the blank to prebreak the scores. The single-staying machine will then glue a strip of 7/8-in. (22-mm)-width kraft paper of the required length to each corner of the box. For greater quantities the boxmaker uses a quad stayer. The quad stayer feeds the box blanks automatically under a plunger that has the same block size as the box or cover to be formed. With each stroke of the machine, the box blank sides are turned up and stay paper is applied to all four corners at one time.

After staying, the box is in acceptable form, requiring only an attractive outer wrap. In most operations, the paper box wrap is placed onto the conveyor gluer, which applies hot glue to the back of the wrap and then places it on a traveling belt. The wrap is held in place by suction under the belt. As the wrap travels on the belt, either it is removed from the belt by a machine operator, who manually spots the paperboard box on the wrap, or it is automatically spotted by machine. After spotting, the box and wrap move on to another plunger mechanism where the wrap is forced around the box. Simultaneously, nylon brushes smooth the paper to the four sides of the box. Just before the plunger reaches the bottom of the stroke, the wooden block splits, allowing metal "fingers" to push the paper in the box. The wooden block then closes together and completes its downstroke where felt-lined blocks press the sides and ensure the gluing of the paper to the inside as well as the outside of the box.

The manufacturing process described above is for the simplest box, but the setup box can accommodate unusual requirements with regard to windows, domes, embossing, platforms, hinges, lids, compartments, and other variations. Standard variations of the rigid box include the telescope box, the ended box, the padded-cover box, special shapes (e.g., oval, heart-shaped), slide tray, neck or shoulder style, hinged cover, slanted side, full telescope, box-in-box, specialty box, interior partition, extension bottom, three-piece, slotted partition, and interior platform. This versatility is extremely valuable in meeting the merchandiser's demands for quality, quantity, and convenience. Figures 1 and 2 show a familiar candy box and an unusual configuration for cosmetics.

MATERIALS

Four primary materials are needed for manufacturing the rigid box: chipboard (for the rough box), stay paper (to hold the sides of the box together), glue (to hold the outer

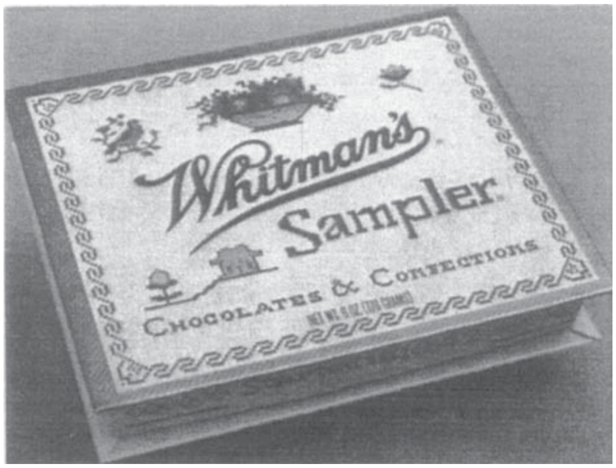

Figure 1. A familiar example of a rigid paperboard box.

wrap to the box), and outer wraps (for the decorative appearance).

There are four common types of chipboard used in boxmaking: plain, vat-lined, book-lined, and “solid news.” Plain chipboard is made entirely of waste paper, with the minimum of selection or de-inking of waste. Vat-lined chipboard provides a cleaner appearance. It is primarily chipboard with a liner (made of low-grade white waste paper) that is applied on the board machine at the mill. Book-line chipboard is chipboard with a liner of book or litho paper pasted to one or two sides as a separate operation. “Solid news” differs from plain chipboard in that the waste used in this sheet is a little more selected and is made mostly from newspaper waste that has been de-inked. Other boards are available, including glassine-lined, foil-lined, and folding grades of boxboard, but the four listed above are those that are primarily used.

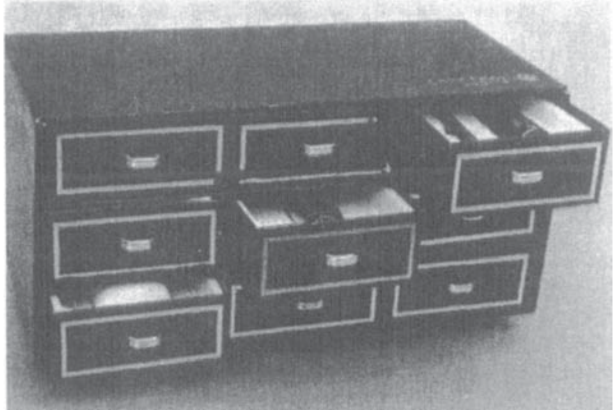

Figure 2. The high-fashion look of a lacquered wooden box is copied with style in the glossy finish and fine detail work of this rigid box designed for Lancôme cosmetics. Especially noteworthy is the registration of the gold-stamped border on the wrap of each separate drawer. Brass drawer-pulls complete the illusion. Shelves are sturdy and wrapped, allowing the drawer to slide in and out smoothly.

To properly serve the customer, a boxmaker must stock various sizes and weights of board. Setup boxboard is measured in basis weight: A 50-lb (22.7-kg) bundle of 50-basis-weight boxboard contains 50 standard 26 × 40-in. (66–102-cm) sheets; a 50-lb (22.7 kg) bundle of 40 basis weight boxboard contains 40 sheets. The larger the basis weight, the thinner the sheet.

Stay paper is almost always 7/8-in. (22-cm)-wide kraft or white paper. Glues are either animal- or starch-based, formulated to dry fast or slow. They are available in dry form for mix-it-yourself, or flexible form to melt as used. Most glue is hot-melted to give a faster drying and lay-flat quality to the paper with minimal warping (see Adhesives).

The final ingredient in box manufacturing is the outer wrap. There are thousands of stock papers, most of them available in 26-in. (66-cm) or 36-in. (91.4-cm) rolls. The wraps are generally paper, but foil and cloth wraps are also used. Through the use of artwork, photography, and good printing, a boxmaker can also produce a distinctive custom-made wrap.

Modern boxmakers make extensive use of CAD systems for samples and limited production runs, which are often cut on computer-driven plotter tabes (2).

APPLICATIONS

The rigid (setup) box has stood the test of time and competes well within its selected markets. It protects, it builds image, it displays, and it sells. The setup box possesses unique qualities that satisfy the specific needs of all four segments of the marketing chain: the consumer, the retailer, the marketer, and the product packager. The boxes are delivered setup and ready to load. Small “market-test” or emergency quantities can be prepared quickly at low cost, and individual custom designs are available without expensive investment in special tools, jigs, or dies. The rigid “feel” creates consumer confidence, and the manufacturing process permits utilization of varied overwraps to reflect product quality. The boxes are easy to open, reclose, and reuse without destroying the package. Rigid boxes are recyclable and made from recycled fibers. Production runs can be small, medium, or large, and volume can fluctuate without excessive economic penalities. In addition, these boxes provide lasting reuse features for repeat advertising for the seller. They are customized to provide product identity. Rugged strength protects the product from plant to consumer. Reinforced corners and dual sides provide superior product protection and minimize damage losses.

The markets for rigid boxes are as follows: tableware, jewelry and watches, perfumes and cosmetics, music and video games, stationery and office supplies, luxury beverages, chocolate and confectionery and gifts, boxed greeting cards, photographic trade products, engineering and DIY tools, and medical equipment (2).

BIBLIOGRAPHY

Larry Lynch and Julia Anderson, “Boxes Rigid-Paperboard” in M. Bakker, ed., *The Wiley Encyclopedia of Packaging*

Technology, 1st edition, John Wiley & Sons, New York, 1986, pp. 76–78; 2nd edition, A. J. Brody and K. S. Marsh, eds., 1997, pp. 108–110.

Cited Publications

1. R. Laszlo and G. L. Wyybenga, *The Packaging Designers Book of Patterns*, John Wiley & Sons, New York, 1991.
2. M. Jukes, “Rigid Boxes” in M. J. Kirwin, ed., *Paper and Paperboard Packaging Technology*, Blackwell Publishers, London, 2005.

BOXES, RIGID, PLASTIC

Richard M. Brasington
Buckhorn, Milford, Ohio

Rigid plastic containers have been used for many years in a wide variety of consumer and industrial applications. Some of the more familiar uses have been as the bread trays, milk crates, and beverage cases that one might see in a supermarket; as cosmetic and shampoo bottles; or as medicine bottles or blister packs used to display consumer goods on a store rack. Some of these and less-familiar uses are touched on in this article, and the processes used to produce this wide range of containers are covered as well. Finally, container configurations and applications in the emerging category of reusable shipping containers are described in some depth.

There are five major *processes* used to manufacture rigid plastic containers: injection molding, compression molding, blow molding, rotational molding, and thermoforming. Each process is suited to the production of a range of geometries with a variety of materials at different costs. A complete description of these processes, materials, and applications is beyond the scope of this article, but an overview is possible and will be helpful for later discussions.

TYPES OF MOLDING

Injection Molding

In this process a heated, softened plastic material is forced from a cylinder into a cool mold cavity, which results in a plastic product matching the geometry of the cavity of the mold. Generally, molds are expensive, but they produce the widest variety of part shapes at very high rates of production (see Injection Molding).

Compression Molding

This process uses preheated thermosets and high mechanical pressure to shape the material between male and female portions of a die. The mold cavities are preheated themselves, and the parts are removed after they have been cured under pressure. Many fiberglass and polyester parts are made with this method in which tooling costs are moderately expensive and production rates are moderately high. (see Compression Molding).

Blow Molding

This is most often used to shape hollow items like bottles. A tube of hot melt, called a *parison*, is extruded between the open halves of a chilled mold. The mold halves are clamped together, pinching off the tube at the ends. Air or an air and water mist is injected into the cavity, inflating the soft tube against the mold surfaces. Cooling time is quick, tooling costs are moderate, and production rates are extremely high (see Blow Molding).

Rotational Molding

This is also a process for producing hollow, seamless products. In this method, a powder or liquid plastic is placed in a mold; the mold is heated and rotated about two perpendicular axes simultaneously and then cooled. After the material solidifies, the mold is opened and the part is removed. Tooling and equipment costs are low, but production rates are slow, and the geometry of the parts produced is limited.

Thermoforming

This involves elevating the temperature of a thermoplastic sheet material to a workable level and forming it to shape. The forming process draws the sheet by a vacuum into an open, chilled mold. Like rotational molding, the tool costs are low, but production rates are slow, and there are limitations to the complexity of the part geometry.

REUSABLE SHIPPING CONTAINERS

All of these processes can be used to manufacture reusable shipping containers, but by far the most often used method is injection molding. This process is best suited for reusable shipping containers because it allows intricate shapes to be molded at high rates of production. The molds last a long time, and relatively low unit costs can be achieved.

The reusable shipping container (RSC) concept is simple: A container is loaded with product and shipped to its destination, where it is emptied. The empty container is sent back to the supplier, refilled with product, and then shipped again to its end-user destination. The cycle is then repeated over and over again.

While the concept is not new, its application in a wide variety of industries has spurred increased usage. Replacing expendable corrugated packaging with RSCs saves money, reduces worker injuries, and helps the environment. Money is saved by purchasing plastic containers once and reusing them instead of buying corrugated cartons each time a shipment is made. Worker safety and health are improved by providing easy-to-lift boxes with ergonomic handles. And the environment is helped by using recyclable plastic in the containers and eliminating the dumping of corrugated cartons in the landfills.

APPLICATIONS

Plastic reusable shipping containers have been used for years by wholesale bakeries shipping bread, by dairies shipping milk, and by soft-drink bottlers shipping 2-L bottles into supermarkets. More recently, drug chains, hardware stores, chain restaurants, and durable goods manufacturers have realized the benefits of reusables. Drug and grocery wholesalers pick from their incoming bulk shipments into reusable hand-held totes for split case shipment to individual stores where the contents are then unloaded onto retail shelves. Much of the recent growth in this category can be attributed to the automotive industry and their suppliers that ship component parts into assembly plants. The produce industry is another large user, harvesting into reusable containers in the field, shipping to the packing houses, and then sending them to supermarkets in the same container. This eliminates the cost of corrugated packaging and the double handling associated with repacking into corrugated boxes.

A relatively new application for reusable plastic shipping containers has been with bulk liquid loads. These are referred to as intermediate bulk containers (IBCs), and they are collapsible bulk containers with a plastic film liner. They have been used to ship tomato paste, liquid eggs, syrups, and cosmetics, to name a few. To provide the strength to carry liquid loads, these IBCs are made from either (a) an engineered resin or (b) hot-plate-welded high-density polyethylene (HDPE), or polypropylene. In hot-plate welding, two halves of the base and wall units are welded together with steel, fiberglass, or pultruded rods sealed inside the walls for rigidity.

TYPES OF CONTAINER

Various container types can be used in these applications, and most are injection-molded from HDPE, or polypropylene. Generally, there are four categories of RSCs: nest only, stack only, stack and nest, and collapsible. Each type has its advantages and disadvantages as outlined in the remainder of this article.

Nest-Only Containers

Nest-only containers (see Figure 1) have tapered walls that allow them to fit inside each other or “nest” when they are empty. These are inexpensive containers to make, but they require racks or shelves to sit on when they are full of product.

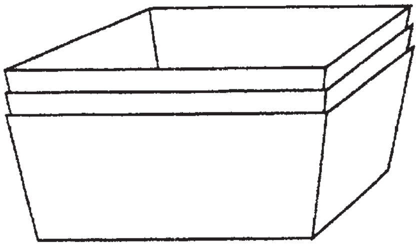

Figure 1. Nest only.

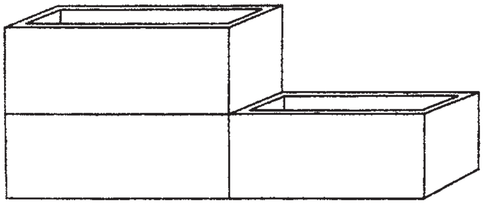

Figure 2. Stack only.

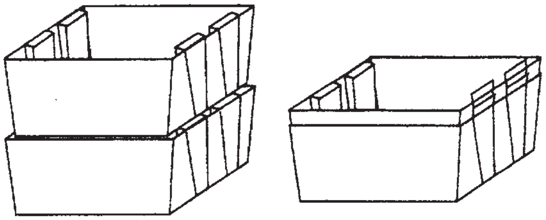

Figure 3. 180° stack and nest.

Stack-Only Containers

Stack-only containers (see Figure 2) have straight walls and good interior room for optimal utilization of interior space. They have excellent stacking stability and make good over-the-road containers. Because they stack only, they take up a lot of space and are inefficient when stored empty. Lids are not necessary for stacking, but could be used to keep dirt out of the containers.

Stack-and-Nest Containers

There are five types of stack-and-nest containers:

1. *90° Stack-and-Nest*. By turning a container 90°, containers can either stack on top of each other or nest inside one another. They do not need a lid and are generally inexpensive. Depending on the configuration, they can be good for over-the-road transport.
2. *180° Stack-and-Nest Containers*. (see Figure 3). Similar to the 90° version, with a 180° turn a container can be either nested when empty or stacked when full. Stacking posts on the inside ends of the container allow this versatility, but they take up interior room and take up potential product space.
3. *Attached-Lid Containers* (see Figure 4). These are nest-only containers with lids that are attached, usually by a metal hinge wire. They are ideal

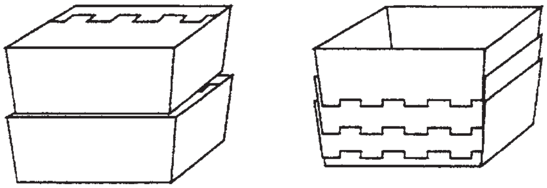

Figure 4. Attached lid.

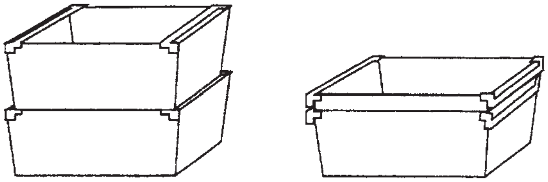

Figure 5. Bail.

over-the-road shipping containers and provide an excellent unitized load. They stack when the lids are closed and nest when the lids are open and are one of the most popular RSC.

4. *Detached-Lid Containers*. These are basically nest-only containers with lids that make excellent over-the-road shipping containers. They stack when the lids are snapped on, and, they nest when the lids are removed. These are the easiest lidded containers to clean, but do require keeping track of both boxes and separate lids.
5. *Bail Containers* (see Figure 5). These are nest-only containers with "bails" that flip in to allow stacking and flip outside the container to allow nesting. They make good transportation containers, are easy to clean, and do not require the tracking of separate lids and boxes.

Collapsible Containers

There are several types of collapsible containers. For bulk boxes (see Figure 6), which are generally built on a pallet base **and 30 in. high**, the most efficient design has side and end walls that are hinged at the base and fold inward flat on themselves. With straight walls, these offer excellent interior space utilization, and when they are empty and collapsed, they offer efficient storage. They generally come with optional detached lids.

Smaller collapsible totes (see Figure 7) offer the same interior space efficiencies and collapsible storage benefits as do bulk boxes. They are more commonly designed like collapsible bulk boxes, but some are designed accordion style as in Figure 7; both have collapsing design and can be open-topped or have a detached or attached lid. The accordion style can accommodate an attached lid as well.

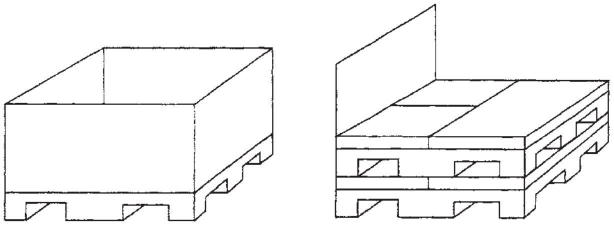

Figure 6. Collapsible bulk box.

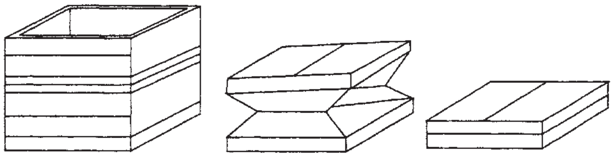

Figure 7. Collapsible tote.

BIBLIOGRAPHY

General References

1. E. A. Leonard, *Packaging Economics*, Books for Industry, New York, 1980.
2. S. Sacharow and R. C. Griffin, Jr., *Plastics in Packaging*, Cahners Publishing, Boston, 1973.
3. J. F. Hanlon, *Handbook of Package Engineering*, 2nd edition, McGraw-Hill, New York, 1984.
4. K. Auguston, "A Selection Guide to Returnable Containers," *Modern Materials Handling*, 42–43 (November 1995).

BOXES, SOLID-FIBER

Robert Quinn
Union Camp Corporation
Updated by Staff

INTRODUCTION

Solid-fiber containers are used almost exclusively for applications in which container return and reuse are desirable and where return can be controlled by the distributor. Without such control, the impetus to use the multitrip shipping containers, which are more costly than corrugated boxes, would not exist.

As a rule of thumb, the solid-fiber box costs two to three times as much as a comparable-size general-purpose corrugated shipper. However, the solid-fiber container can be used an average of 10–15 times before retirement. The economics are obvious, but only in a "closed-loop" distribution system.

Solid fiberboard differs from corrugated board in several significant respects (see Boxes, corrugated). As its name implies, the former is a solid (nonfluted) structure consisting of two or more plies of containerboard. Four plies generally are used to manufacture board from which solid-fiber boxes are to be produced. Standard quality solid fiberboard is more resistant to water and damp conditions than are standard corrugate fiberboards.

FABRICATION

Solid board is made either on a multi-ply paperboard machine forming with vats or by a combination of forming methods. It is also made by multi-ply lamination. Solid fiberboard packaging is manufactured primarily from recycled material. It is both recyclable and biodegradable at the end of its useful life (1).

Solid-fiber sheets are constructed by gluing roll-fed containerboard plies together on a machine called a *laminator*. The plies are bonded under controlled pressure to form a sheet that comes off the line as a continuous strip that is subsequently cut to predetermined lengths (2).

Caliper of the finished board is the result of the number and thickness of individual plies. It varies according to the needs of the customer market. For most applications, finished sheet thickness ranges between 0.035 and 0.135 in. (0.089 and 0.343 cm). (In the industry lexicon, 0.035 in. is called 35 points). For special heavy-duty applications, solid fiberboard of 250-point thickness can be produced. This, however, is the exception. For the largest market (shipping containers), board thickness averages 70–80 points (0.18–0.20 cm).

When the continuous web of solid fiberboard exits the laminator, it is cut to length. Converting equipment prints, diecuts, and, if needed, coats the material with polyethylene or other protective finish. Solid fiberboard packaging is supplied flat to save space in storage and distribution. It can be erected by the packer manually or with mechanical assistance (1). When product volume is high and a high packing speed is required, fully automatic machinery is used for erecting, packing, and closing.

A principal difference in construction between solid-fiber and corrugated boxes is that rail and highway shipping-authority rules limit solid-fiber boxes to only two styles of manufacturer's joints; stitched and extended-glued. Standard methods for testing solid-fiber boxes have been developed and published by the American Society for Testing and Materials (ASTM) and the Technical Association of the Pulp and Paper Industry (TAPPI). Common-carrier requirements for solid-fiber box performance (burst strength, size, and weight limits) have been established and are fully detailed in Rule 41 of the Uniform Freight Classification (rail shipment) and Item 22 of the National Motor Freight Classification (truck shipment) (see Laws and regulations).

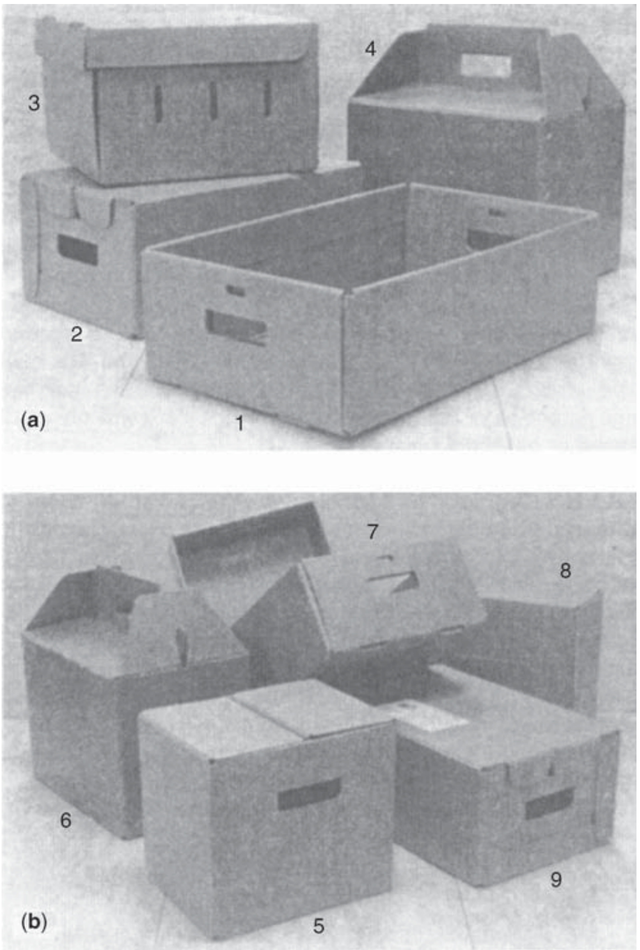

Figure 1. Solid-fiber beverages cases and tote boxes. (a) 1, One-piece bin box with locking feature; 2, three-piece 24/12-oz. (355 mL) beverage case; 3, one-piece vegetable box; 4, attache-style tote box. (b) 5, one-piece 4/1-gal (3.785-L) beverage case; 6, attache-style tote box; 7, one-piece lidded tote box; 8, one-piece self-locking tote box; 9, three-piece 24/12-oz. (355 mL) beverage case.

APPLICATIONS

Solid fiberboard is used in a wide range of packaging and display applications such as the packaging of horticultural produce, meat and poultry, and fish. Beer bottles and cans are packed in a wrap-around lithioprinted multipack. Compartmentalized machine-erected trays are typically used for multipacks of plastic yogurt cups. Solidboard is also used in shoe box packaging. Products that are heavy, are likely to shift during transportation, require protection, and possibly have protruding parts need the protection of puncture-resistant solid board. It is also used for export packaging (1).

After containers, the largest use of solid fiberboard is for slip sheets. Slip sheets are used in materials-handling applications, chiefly as replacements for bulkier and more expensive wood pallets. Designed for forklift handling and requiring minimal warehouse space, solid-fiber slip sheets are easy to use and store. Slip sheets are made from three plies of kraft. Polyethylene-lined board and hard-sized board can be used for wet/damp conditions. An anti-skid varnish can be applied to the slip sheet to assist load stability (1).

Divisions or partitions of solid fiberboard are used to create cells in a case or box wherein individual items and packaged products can be placed. It is superior to corrugated board for this purpose and does not indent with the shape of the upturned container. Other uses include point of purchase displays, furniture (sheets are affixed to the wooden framework to provide a firm backing for upholstery), and mirror backing. Automative applications include non-load-bearing interior bulkheads. Drums, railcar dunnage, and wire- and-cordage reels, are other miscellaneous uses in which solid fiberboard's strength, damage resistance, and machinability are cost-effective.

See Figure 1 for some examples of solid-fiber containers.

BIBLIOGRAPHY

1. R. Quinn, "Boxes, Solid Fibre" in M. Bakker, ed., *The Wiley Encyclopedia of Packaging Technology,* 1st edition, John Wiley & Sons, New York, 1986, pp. 80–81; 2nd edition, A. J. Brody and K. S. Marsh, eds., 1997, pp. 112–113.

Cited Publications

M. J. Kirwan, "Solid Fibreboard Packaging" in M. J. Kirwan, ed., *Paper and Paperboard Packaging Technology,* Blackwell Publishing, London, 2005.

W. Soroka, *Fundamentals Packaging Technology,* Institute of Packaging, UK, 1996.

BOXES, WOOD

The use of wooden boxes and crates dates back to the Industrial Revolution, when the building of roads and railways led to their development as the first "modern" shipping containers (1). (See also Boxes, wirebound; Pallets, wood.) They still are used today for products that require the strength and protection that only wood can provide. The difference between a box (or case) and a crate is that a box is a rigid container with closed faces that completely enclose the contents. A crate is a rigid container of framed construction. The framework may or may not be enclosed (sheathed) (2).

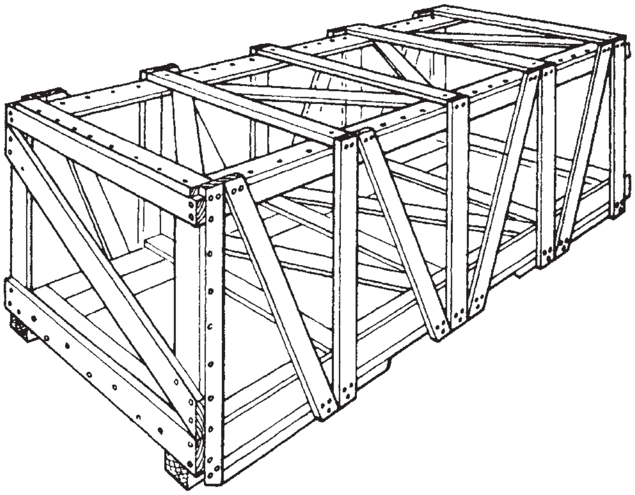

Figure 2. Simple wooden crate.

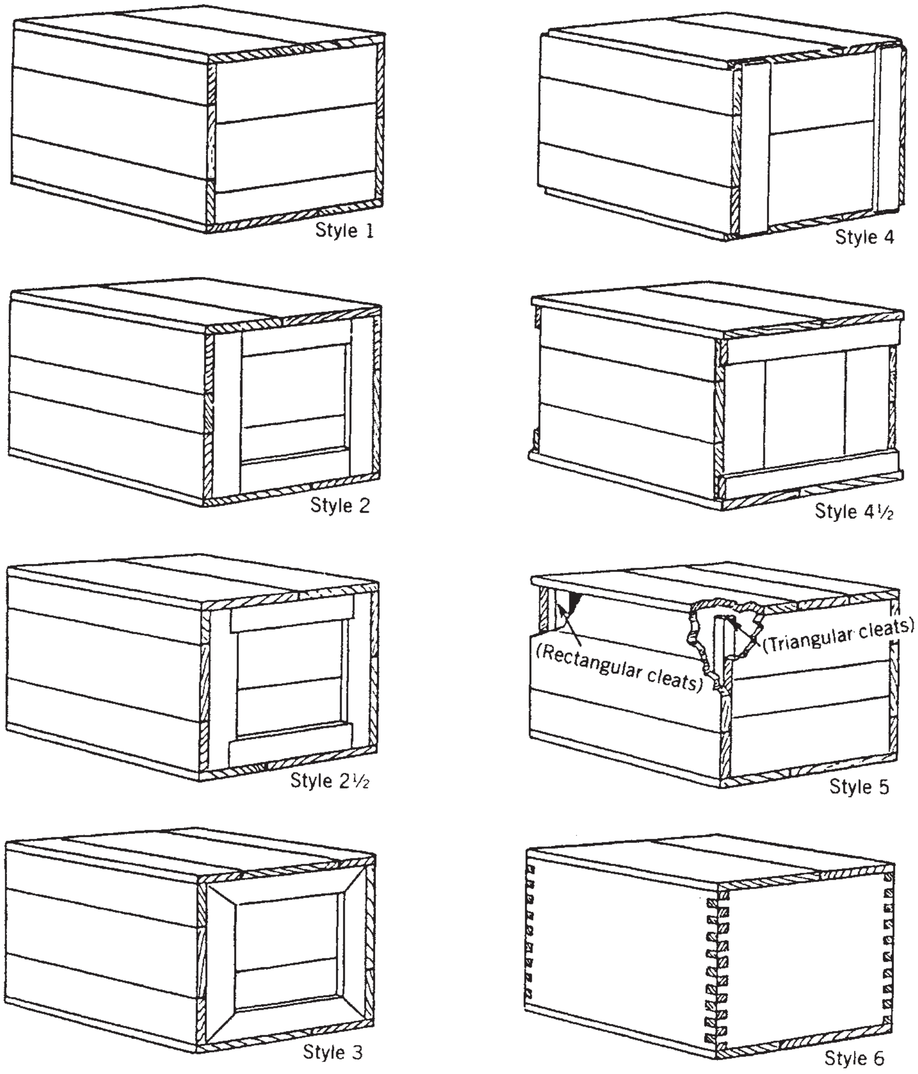

Figure 1.

Table 1. Commercial Box Woods[a]

	Group 1	Group 2	Group 3	Group 4
Alpine Fir	Lodgepole Pine	Douglas Fir	Black Ash	Beech
Aspen	Magnolia	Hemlock	Black Gum	Birch
Balsam Fir	Nobel Fir	Larch	Maple (soft or silver)	Hackberry
Basswood	Norway Pine	North Carolina Pine	Pumpkin Ash	Hickory
Buckeye	Redwood	Southern Yellow Pine	Red Gum	Maple (hard)
Butternut	Spruce	Tamarack	Sap Gum	Oak
Cedar	Sugar Pine		Sycamore	Rock Elm
Chestnut	Western Yellow Pine		Tupelo	White Ash
Cottonwood	White Fir		White Elm	
Cucumber	White Pine			
Cypress	Willow			
Jack Pine	Yellow Poplar			

[a] Ref 4.

BOXES

Box styles. Wooden boxes are of either “nailed construction” or “lock-corner construction.” Of the eight basic box styles shown in Figure 1 (3), Style 6 is the only lock-corner construction. The others are nailed (cleated).

Wood. Specifications for wooden boxes refer to the categories developed by the US Forest Products Laboratory, which relate to strength and nail-holding power (see Table 1). Groups 1 and 2 are relatively soft; Groups 3 and 4 are relatively hard. For a given box of a given style, the thickness of the wood and cleats depends on the type of wood.

Fastenings. The strength and rigidity of crates and boxes are highly dependent on the fastenings, which are as follows: nails, staples, lag screws, and bolts. Nails are the most common fastenings in the construction of boxes. The size and spacing of the nails depends on the type of wood (5).

Loads. The type of load is determined by the weight and size of the contents and its fragility, shape, and capacity for support of, or damage to, the box. Load types are classified as Type 1 (easy), Type 2 (average), or Type 3 (difficult). Descriptions and examples of each load type are contained in Ref. 5.

CRATES

A wood crate is a structural framework of members fastened together to form a rigid enclosure that will protect the contents during shipping and storage. The enclosure is usually rectangular and may, or may not, be

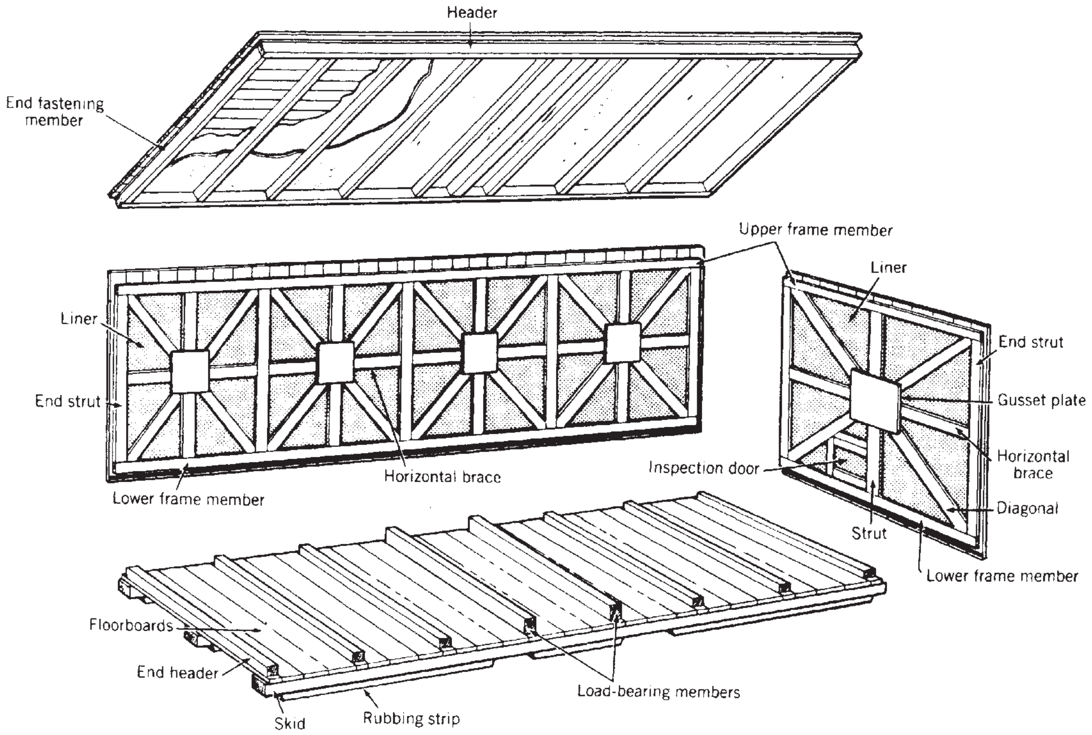

Figure 3. Plywood-sheathed crate.

sheathed (4). A crate differs from a nailed wood box in that the framework of members in sides and ends must provide the basic strength. For its strength, a box relies on the boards of the sides, ends, top, and bottom. A crate generally contains a single item, and its dimensions are not subject to standardization. The function of a crate is to protect a product during handling and shipping at the lowest possible cost. A simple enclosing framework is shown in Figure 2 (4).

Some products and shipping conditions require greater protection. The value of the contents or the likelihood of top loading may dictate the use of a sheathed crate (6). The sheathing can be lumber or plywood. A plywood-sheathed crate is shown in Figure 3 (4).

BIBLIOGRAPHY

1. F. A. Paine, *The Packaging Media*, John Wiley & Sons, Inc., New York, 1977.
2. ASTM D-996: *Standard Definitions of Terms Relating to Packaging and Distribution Environments*, ASTM, Philadelphia.
3. National Wooden Box Association, *Specifications for Nailed Wooden and Lock Corner Boxes for Industrial Use*, Washington, DC, 1958.
4. *Wood Crate Design Manual, Agriculture Handbook No. 252*, U.S. Department of Agriculture, Forest Service, 1964.
5. *Federal Specification PPP-B-621C*, Oct. 5, 1973.
6. American Plywood Association, *Plywood Design Manual: Crating*, Tacoma, WA, 1969.

BULK PACKAGING

Peter Henningsen
Minnetonka, Minnesota

Bulk packaging is an economical solution for the shipment of many different types of product. Continuing advancements in the materials applicable to constructing bulk containers contribute to increasing acceptance in their use. These factors, together with lower materials-handling and freight costs, combine to create an effective shipping container system that meets the needs of the product, the shipper, and the customers.

BULK PACKAGING CONSIDERATIONS

Almost all types of product present possibilities for use of bulk containers. Successful applications include chemicals, liquids, pastes, metallic powders, resins, food items, automotive parts, and grains. Although metal, plastic, and fiber drums are a form of bulk containers, these materials are not included here as they are specifically covered in other articles of this encyclopedia. Planning for use of bulk containers should include the following analysis.

Product Needs. These needs include physical and chemical properties, such as sensitivity to moisture gain or loss, flow characteristics, loading and unloading, compatibility with packaging materials, vapor emissions, protection from oxygen, retention of various gases, physical protection, and normal production volumes.

Product Weights. Depending on the product and the container used, shipping weights of 2000 lb (907 kg) and more are common, and some dry, flowable products that weigh up to 8000 lb (3629 kg) are being sucessfully shipped.

Container Costs. Weight and size of product, production volumes, loading and unloading requirements, and methods of storage and transportation are all key elements in the design process. It is essential to design for optimum cube in storage and in the transportation vehicle to realize the most benefits.

Lightweight products may reach vehicle weight limits before cubing out. For heavy products, stacking strength to use warehouse space effectively is a major point. Container base dimensions must relate efficiently to both storage and transport vehicle size and incorporate a solid base for handling. Typical sizes are 48 in. × 40 in. (1219 mm × 1016 mm) and 44 in. × 35 in. (1118 mm × 889 mm). Many other sizes are used, which depend on distribution requirements.

Container Types. Markets served and distribution needs determine selection of the most cost-effective container. Woven plastic films, corrugated containers, rigid plastics, metal, and wood products are materials commonly used. Reusability reduces total costs, and the ease of disposability at the end of container life is important. The automotive industry makes great use of returnable bulk containers for parts and assemblies feeding their production lines. Ingredient packaging for food products is another major use.

Customer requirements for use of the product are important. Special features can be designed into containers to facilitate filling and emptying. All containers must be equipped to accept applicable materials-handling devices—forklifts, cranes, hoists, slings, pallet jacks, etc.—used to load, store, move, and unload the containers at all points in the distribution cycle.

MATERIALS USED FOR BULK CONTAINERS

The most commonly used materials are described below. Table 1 shows a comparison of some attributes of various container materials.

Corrugated. Widely used for bulk containers, corrugated containers can be designed to compensate for bulge resistance, puncture resistance, and stacking strength as needed. Variations in board construction that provide necessary properties include one-piece liners, two-piece inners, as well as three-ply and/or eight-sided (octagonal) shapes. Board used can be single, double, triple wall, or

Table 1. Comparative Attributes of Container Materials

General Material Category	Reuse	Disposability	Tare Weight	Durability	Resistance to Shipping Environment	Container Cost Advantage	Freight Cost Advantage
Corrugated	Good	Best	Best	Good	Good	Best	Best
Bags	Better	Good	Best	Better	Better	Better	Best
Rigid plastic	Best	Good	Better	Better	Best	Good	Better
Metal	Best	Best	Good	Best	Best	Good	Good
Wood	Better	Better	Good	Better	Better	Better	Better

combinations thereof. Within supplier equipment limitations [up to ~180 in. (4572 mm) in perimeter and 55 in. (1397 mm) in depth], many different sizes and shapes are possible. Box liners are used as needed to ensure product protection. Containers are easily disposed of and can be designed for reuse. Container surfaces readily accept graphics for product and company identification.

Bags. Many uses for bags are possible because of the multitude of films and laminations available for fabrication. Woven polypropylene fabrics are most common. Use of rubberized plastic films greatly increases bag strength. If needed, then special extrusion coatings or additional protective liners can be used for special product needs. Most uses are for dry products. Bag handling is usually accomplished through four corner lifting loop straps sewn into bags at the top. Common bag sizes are usually up to 66 ft^3 (7.8 m^3). However, recent designs that use rubberized nylon and DuPont Kevlar provide the ultimate with bags up to 9 ft (2.74 m) in diameter and 10 ft (3.05 m) high, which hold up to 25 tons (2268 kg). Bags are collapsible when empty, light in weight, and can be designed for reusability (see Bags, plastic).

Rigid Plastics. Designs for rigid plastic containers can be made to meet all expected requirements for bulk packaging. They can be collapsible, lightweight, and usually up to 34 in. (864 mm) in depth. They are adapted to product needs by selection of compatible plastic resins for molding and/or addition of protective liners. These containers are generally more costly than other types but can be justified in a total system concept through recycling and reuse. Plastic containers are resistant to normal environmental hazards such as moisture and water. Temperature extremes—low or high—are addressed by specific material selection. Some plastics may be adversely affected by exposure to sunlight. Plastics often are used in captive systems for handling and moving product between multiple plants of a single parent company.

Metal. Metal containers in the form of drums were among the first types of bulk container. The possibilities for metals to meet many different product needs—high or low temperatures, corrosion resistance, longevity, chemical compatibility, shipping weight and cube, etc.—are significant. They can be closed-wall, cage-wall, collapsible, and even expandable by adding tiers to a base container. Metal returnables commonly are used for handling and shipping automotive parts and assemblies from suppliers to assembly plants. The quantities involved make disposing of packaging materials costly. Efficient container design, which includes internal components, provides for reuse and physical protection. Metal containers are usually heavier than other container types.

Wood. Wood is adaptable to the design of bulk containers to meet many different product demands. Styles include open crates, cleated plywood, and wooden boxes. Containers can be designed for knocked-down shipment when empty to reduce space and freight costs. Reusable fastening devices are available to close many types of box construction. Box liners in various types are used to satisfy special product needs. Wirebound boxes represent a specially designed box or crate to reduce weight and increase strength and are successfully used in bulk product shipments.

CONTAINER TESTING

ASTMD-4169 provides for definition of test elements and the applicable test procedures for shipping units to meet specific distribution patterns. Performance can be measured against any one of three assurance levels as determined by the shipper. Preshipment testing is essential for bulk container validation.

BIBLIOGRAPHY

General References

Fibre Box Handbook, Fibre Box Association, Rolling Meadows, IL, 1992.

G. G. Maltenfort, Corrugated Shipping Containers: An Engineering Approach, Jelmar Publishing Co. Plainview, NY, 1988.

Wood Crate Design Manual, Agricultural Handbook No. 252, U.S. Department of Agriculture Forest Services, 1964.

Annual Book of Standards, Vol. 15.09, American Society for Testing and Materials, Conshohocken, PA, 1996.

R. J. Kelsey, *Packaging in Today's Society*, 3rd ed., St. Regis Paper Company, New York, 1989.

C

CAN SEAMERS

Otto L. Heck
Richard Cabori
Angelus Sanitary Can Machine
Company, Los Angeles,
California

Can seamers are machines that mechanically attach component ends to can bodies in a reliable manner. Around 1900, the sanitary can made its appearance in Europe, where both top and bottom ends were double-seamed to the can body. The term “sanitary” indicated that solder was not used in the ends being double-seamed, but only on the outside of the can body side seam (1). In 1910 Henry Louis Guenther, inventor and manufacturer, introduced can seamers for double seaming that met the requirements of modern food and beverage processing. His products, which are sold under the trade name of “Angelus,” were so well introduced that they are now used by the largest food, beverage, and can manufacturing companies in the United States as well as abroad (2). Basically, there are two categories of can seamer: In can manufacturing they are called *can shop machines*, which attach the first end on a three-piece can, and in product filled cans they are called *closing machines*, which attach the last end on either a two-piece or three-piece can.

THE DOUBLE SEAM

The preservation of canned products requires hermetically sealed cans. The process of creating an airtight closure by attaching the can end component to the can body is called double seaming. This double seam is a metal-to-metal joint formed by mechanically interlocking five layers of metal together: three from the can end and two from the can body (3). These layers are then compressed and ironed tightly to form the hermetic seal (see Figure 1). The can seamer sometimes referred to as a double seamer requires two seaming operations to produce a quality seam formed by the machine’s seaming rolls as the can body and can end are held together by a vertical load applied between the lower lifter and the seaming chuck as the can parts move through the machine. During this seaming cycle the can end and can body meet, and the first-operation seaming roll contacts the can end and begins curling the can end around the can body flange. A second-operation seaming roll follows, which tightens and irons out the seam between the can body and can end forming an airtight hermetic seal between the two parts (see Figure 2).

The double seam is a critical can component for a proper seal. Every angle, radius, and dimension must be correct to ensure a hermetic seal (4). The double seam is defined as follows: “The curl on the can end containing sealing compound and the flange on the can body are indexed and rolled flat, forming five folds of metal. Sealing compound between folds gives an airtight seal (5).”

METHOD OF SEAMING

There are two basic seamer designs: can spin and can stand still. Practically all closing machines designed in the early years were of the can stand still type incorporating up to four seaming heads and operation at speeds ranging from 25 to 275 cans per minute. The can-stand-still design is still used extensively and in many cases is a necessity due to the products being closed, such as shortening or some fine powders. In this design the nonrotating can body and can end are assembled between the knockout rod pad and the lower lifter or base plate table. The knockout rod pad keeps the can end firmly in place as the lower lifter (which is synchronized with the knockout pad) raises the can body and can end into the seaming position on the seaming chuck. First operation seaming rolls, which are diametrically opposite each other in a seaming head, revolve around the stationary seaming chuck, and pressure is applied through cam action to form the first operation. After the first operation is completed to the proper thickness, the second-operation seaming rolls, which are diametrically opposite each other, iron out the double seam to the proper thickness. After the seaming operations are completed and the second-operation seaming rolls have been released, the knockout rod follows the seamed can away from the seaming chuck as it is being lowered to the discharge position by the lower lifter (6).

As canning speed requirements increased, can spin or rotating-can-type seamers were developed using a multi-station design. Machines with 4 to 18 seaming stations are in use, providing production speeds of 100–2300 cans per minute (see Figure 3). Can ends are automatically separated and mated with the can bodies in the seaming

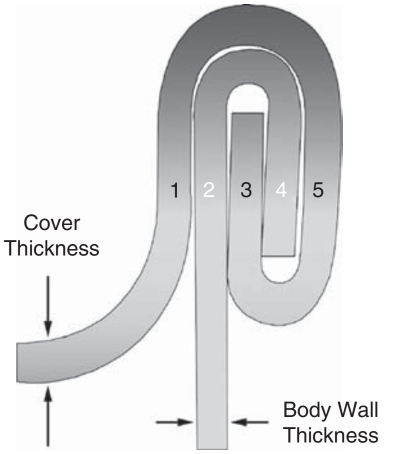

Figure 1. Double seam made of five layers compressed and ironed tightly to form a hermetic seal.

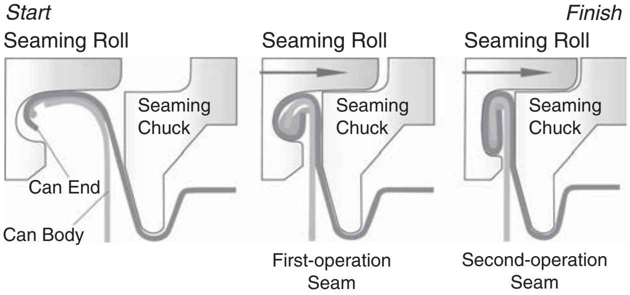

Figure 2. A schematic of the double-seam process.

position. The knockout rod pad contacts the can end while the lower lifter, synchronized with the knockout rod pad, lifts the can body and can end into position on the seaming chuck. On thin-walled lightweight cans the machine design incorporates driven seaming chucks and driven lower lifters to prevent *can skid* or *can buckling*. One first operation seaming roll actuated by a cam forms the first operation seam. After completion of the first operation seam, the second operation seaming roll actuated by a similar cam action irons out the seam to the proper thickness.

MACHINE TYPE BY APPLICATION

Can seamers are typically manufactured in five machine types for seaming can ends to can bodies: can shop, atmospheric, mechanical vacuum, steam vacuum, and undercover gassing.

1. *Can shop*. For can manufacturing: this attaches the first end on three-piece cans.
2. *Atmospheric*. For can closing products not requiring removal of oxygen for preservation—that is, soaps, petroleum products, frozen products, and hot products > 180°F.
3. *Mechanical vacuum*. Evacuates oxygen from headspace of can for preservation of product at slow speeds—that is, vegetables, specialized powdered products.
4. *Steam vacuum*. Evacuates oxygen from headspace of can with steam for preservation of product at high speeds—that is, fruits, vegetables, soups, fish, meat products, and juices.
5. *Under-cover gassing*. Displaces oxygen in headspace of can with a gas, such as carbon dioxide or nitrogen, to extend shelf life and/or increase internal can pressure for thin-walled aluminum cans—that is, beer and soft drinks.

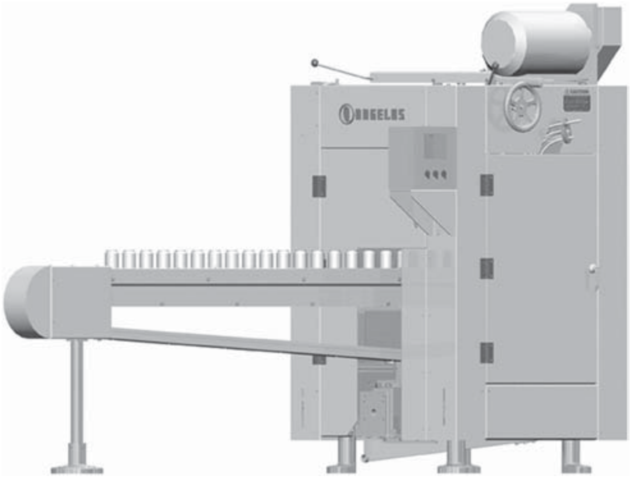

Figure 3. Can seamer.

Generally, during the process of a modern automated canning operation, cans are filled with a measured amount of product, then transferred from the filler to the can feed table of the seamer. This transfer from the filler to the seamer is critical and must be timed in such a manner to avoid can damage, product spill, or extreme product agitation, thereby rendering a smooth flow of cans and product into the seamer. As the cans move into the seamer, they are sensed by a mechanical, electrical, or optical device that triggers a signal to separate one can end from a stack and feed it in a synchronized rotary manner to an incoming can. Generally, the timing of machine operations is mechanically controlled by cams and there is a dwell period for steam vacuum and undercover gassing applications as stream or gas is injected between the top of the open can and the can end prior to their contact. Filling the headspace of cans with steam or gas displaces the air, preserving the quality of the canned product. After the can parts meet, they move through the seaming cycle of the first and second seaming operations and then the cans are discharged from the machine.

MACHINE SETUP

Can seaming machines are designed to double-seam a given range of can diameters, can heights, and speeds. Can diameters and can heights are expressed in both inches and millimeters, but generally use an industry nominal diameter, such as 200, 202, 206, 207.5, 209, 211, 300, 303, 307, 401, 404, 502, and 603. Industry nominal diameters are defined as follows: The first digit equals inches; the second and third digits equal 1/16 fraction of an inch. For example, a can with a nominal 211 diameter would be the equivalent of $2\frac{11}{16}$ in. and a can with a nominal 307 diameter would be the equivalent of $3\frac{7}{16}$ in.

It is very important that the machine be setup to the correct specification for the type of can end and can body, diameter of the can end and can body, and material thickness of the end and can body. Important setup procedures include the following:

1. Checking the fit of seaming chuck to can end.
2. Initially installing only the first operation seaming rolls. Remove second-operation seaming rolls if in place.

3. Installing seaming chucks and checking that the first operation seaming rolls do not interfere with the seaming chucks when in the seaming position.
4. Setting lower lifter assemblies to correct height relationship with can feed table.
5. Setting lower lifter spring pressure to proper load with an appropriately calibrated instrument, such as a Dillon force gauge or force cell gauge.
6. Setting pin height with an appropriately calibrated instrument, such as a pin height gauge or planer gauge.
7. Setting the first operation seaming rolls on each station to a specified seam thickness using a wire gauge of the proper diameter. Run samples of first-operation seamed cans to verify quality of seam. Visually inspect seam while measuring the seam thickness, seam width, and countersink depth.
8. Installing and properly adjusting the second operation seaming rolls to the seaming chucks on all stations to the specified seam thickness. Run samples of the finished second operation seam. Visually inspect the seam while measuring the seam thickness of the finished seam to given specifications using a properly calibrated seam micrometer. Finally, tear down the second operation seam for further inspection.

KEY FEATURES AND ATTACHMENTS

Depending on the application and production requirements, can seamers are equipped with features and various attachments to meet the demands of industry processors.

Automatic Stops. For safety reasons, machines are equipped with mechanical, electrical, or optical sensors that cut power to the motor, actuate the clutch release unit, and apply the brake to stop the machine rapidly. These safety devices are located at critical areas on the machine.

Filler Drive Seamer Safety Clutch. A safety overload clutch is used to protect the can seaming machine in case of a severe can jam or mechanical failure in the filler.

In-Motion Timer. This is a timing attachment located between the seamer and filler that synchronizes the transfer of cans from the filler pockets to the seamer feed chain fingers during machine operation.

Can Coding Markers. There are two types of markers—mechanical and ink-jet—used to place the processor's identification code on can ends. Mechanical markers use type dies that are capable of debossing and embossing identification characters on can ends. Debossing is where the characters are indented into the top of the can end, and embossing is where the characters are raised on the top of the can ends. Mechanical markers are driven by the seamer and have speed limitations up to 1000 cans per minute. They are used primarily on sanitary food cans. Ink-jet markers are not driven by the seamer and use a nozzle assembly device to print droplets of ink to make up characters forming alphanumeric or bar codes. Ink-jet markers apply clear codes to virtually any surface at nearly any production speed, using a programmable controller and software to monitor the ink quality, size, font, and lines of print.

Automatic Lubrication. Metered amounts of grease and/or oil are automatically delivered by pumps to designated machine areas requiring lubrication while the machine is operating.

Automatic Oil Lubrication Recirculating and Filtration System. This system continually filters water and particles from the recirculating oil. The lubricating oil is pumped and recirculated through the machine, reducing the amount used and the environmental concerns of discarding cycled oil.

Programmable Controller. This provides electrical monitoring of seamer functions and operates auxiliary equipment.

Driven Lower Lifters. Also referred to as *driven lower chucks or driven baseplate tables*. They accept incoming can bodies or product-filled cans from can infeed devices before being raised by a cam action to meet can ends to be seamed at the make up area. They are gear-driven and rotating in a synchronized design with the seaming chucks to provide stability and enhance can control during the seaming cycle process. Driven lower lifters use a preset spring pressure, which is a vital component in the formation of a double seam.

SEAM TIGHTNESS EVALUATION

Generally, in order to stand the rigors of processing, handling, damage by abuse, and distribution, as well as to ensure product shelf-life, the tightness of the seam is critical and should be evaluated carefully. During the formation of a double seam the proper tightness assures that the sealing compound will fill all the spaces not occupied by metal.

Seam tightness is normally evaluated by the degree of waviness or wrinkle found in the cover hook. This wrinkle is formed by compression of the curled outer edge of the can end as it is folded back under the body flange. By increasing the pressure of the seaming rolls, the wrinkle can be ironed out to a smooth strip; and by loosening the rolls, the wrinkle is increased (7). Wrinkles may be classified by a tightness (wrinkle) rating as shown in Figure 4. A 70% wrinkle rating equates to a 30% wrinkle in the cover hook or 70% of the cover hook is wrinkle-free. Less than 70% tightness is considered too loose. There are other numerical cover wrinkle rating systems used: The Dewey and Almy wrinkle rating uses a 0–10 scale in which absence of wrinkle rates as 0 and a full-width wrinkle rates as 10: another uses a 0–3 rating system. The rating for each end component is based on the worst or deepest wrinkle, because it is at this point or area that the seam is

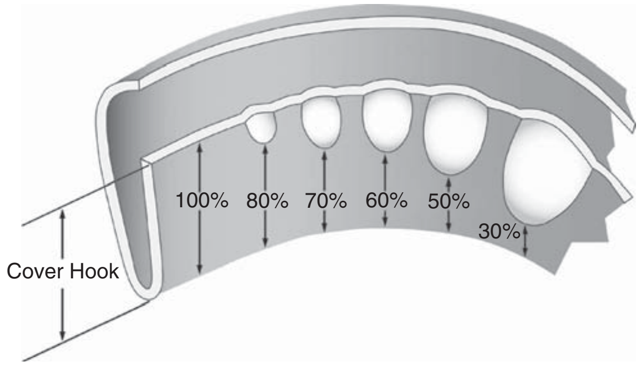

Figure 4. Wrinkles are rated by the percentage of tightness.

most vulnerable to abuse, leakage, and penetration by bacteria.

In hemming a straight edge of metal, no wrinkles are formed. On curved edges, wrinkling increases as the radius of curvature decreases. For this reason, different wrinkle ratings are specified for small-diameter cans as compared to large-diameter cans (8). A 100% wrinkle rating of a 211 diameter can indicates that the seam may be too tight and should be watched for possible defects such as cutovers, droops, and unhooking. A 100% wrinkle of a 603 diameter can would not necessarily be too tight. With most can seamers using standard seaming roll profiles, the ideal seam almost invariably shows a slight wrinkle, except on 603 diameter and other large-diameter containers.

MEASUREMENT OF PERCENTAGE OVERLAP

The overlap of a double seam is expressed as a percentage of the maximum possible overlap. A minimum percentage of 55% is considered acceptable. The percentage overlap of the seam is established by first measuring the internal seam length, a measurement between the inside of the cover hook and the inside of the body hook, and rating this length as 100. The measured length of the actual overlap is then a portion or percentage of that length calculated (B/A × 100 = percentage overlap) (see Figure 5).

PROFILES OF SEAMS

A properly formed first-operation and second-operation double seam requires the correct adjustments of pressure of the seaming rolls and lower lifter or base plate table. The shape and conformity of the finished seam is determined by the taper and fit of the seaming chuck to the top of the end component and the contoured profile of the seaming rolls. The seaming roll profile is a groove around the circumference of the roll which varies with the diameter of the can to accommodate variations in material, material thickness, cover curl, body flanges, and seam specifications of the user. For any given can diameter, there may be a number of roll profiles, which will properly form the double seam. First-operation and second-operation roll profiles are uniquely different. As the first operation seaming roll profile contacts the cover curl, the flange of the can bends over to form the body hook and the edge of the cover tucks underneath to form the cover hook. The second-operation seaming roll profile completes the seam formation by compressing the seam so that the hooks interlock tightly and any metal voids or spaces are filled with the sealing compound.

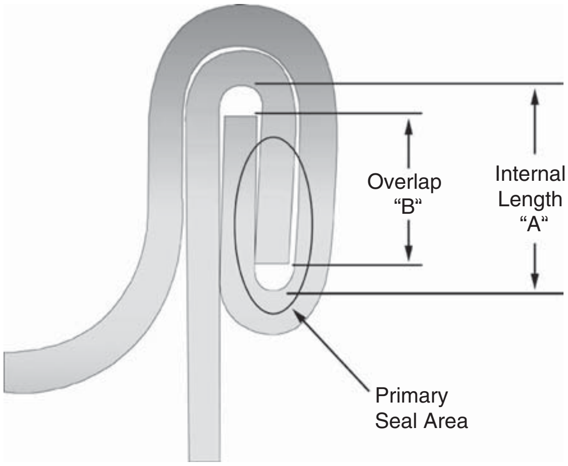

Figure 5. Overlap measurement.

BIBLIOGRAPHY

1. F. L. Church, *Modern Metals*, 28 (1991).
2. *The National Cyclopedia of American Biography*, Vol. XXXIII, James T. White & Co., New York, 1947.
3. *Pocket Guide to Evaluating Double Seams*, Angelus Sanitary Can Machine Company, Los Angeles, CA, 2001.
4. W. Soroka, *Fundamentals of Packaging Technology*, Institute of Packaging Professionals, Herndon, Virginia, 1995.
5. *CMI Can Standards Manual*, Can Manufacturers Institute, Washington, DC, 1992.
6. *Canning Industry History, Terminology & Reference Manual*, Angelus Sanitary Can Machine Company, Los Angeles, CA, 1968.
7. *Evaluating A Double Seam*, W. R. Grace & Co., Cambridge, MA.
8. *Top Double Seam Inspection & Evaluation*, American Can Company, Geneva, NY, 1966.

CAN, COMPOSITE, SELF-MANUFACTURED

Two basic types of self-manufactured composite cans are produced in-house by packagers. One is the traditional spiral-wound or convolute composite can, the familiar form used for motor oil, orange juice, and cocoa-based products (see Cans, composite). A more recent development is the use of folding-carton material for the production of self-manufactured paperboard cans that use composite materials in the folding-carton base stock. A newer innovation is a paperboard can that is hermetically sealed and capable of holding a gas environment.

Composite Cans. A typical example of self-manufacturing of a traditional composite can is a system known as Sirpack. This system, from Sireix (France), installed in the packager's manufacturing facility, produces composite cans that can be round, square, rectangular, or oval. The cans are produced from a continuous form-and-seal process from four reels of material in a horizontal fashion. The materials are shaped around a forming mandrel and sealed, generally by a hot-melt adhesive (see Adhesives). The inside liner is heat-sealed for excellent moisture and liquid tightness (see Sealing, heat). The reels of material are slightly staggered to each other so that the sealing lines on the four materials do not superimpose. The inside materials that provide moisture and liquid tightness are generally made from a plastic film or aluminum foil (or both), according to the protection needed for the product. The outside laminate can be printed by web rotogravure, or web offset (see Printing).

The bottom is generally a metal end, but it can also be made of a composite material matching that of the sidewall. It also can be one of the many plastic closures available. Generally, the top is a heavy injection-molded plastic that is heat-sealed to the upper edges of the container. In most cases, the cover incorporates an easy-open device that allows a separation or opening of the lid and can be reclosed after removing a portion of the product.

The main advantages of the in-plant Sirpack system are that it permits the option of various sizes (material options) and the ability to save the conversion cost normally paid to the converter of the composite cans. Added to this benefit are other savings, such as the savings in floor space and warehousing of empty composite cans prior to use in the filling and closing process. The machinery is relatively compact and easy to maintain. It has been designed for in-plant production with the average mechanic in mind.

Paperboard Cans. Several companies provide systems for in-plant manufacture of paperboard cans. They include folding-carton companies such as Westvaco (Printkan), International Paper (CanShield), and Sealright (Ultrakan). All of their packages are low-to-moderate barrier paperboard cans that can be manufactured in the packager's facilities. Another paperboard can, Cekacan, offered in the United States by Container Corporation of America, provides a high-barrier, gastight supplement to the paperboard-can list. All the paperboard cans are formed from a flat blank and assembled into either a straight-wall can or a tapered-wall can. In some cases, e.g., CanShield, the use of paper-cup technology has been employed to develop the vertical-wall paperboard can.

A paperboard can is described as a semirigid container with the body sidewall fabricated from a single sheet of folding-carton-based material, wound once and sealed to itself, with either or both ends closed by a rigid or semirigid closure. The typical paperboard can has three pieces, which are as follows: a single-sheet single-wound body, a single sheet of base material fixed to one end, and a closure. The system almost always is made in line with the packager's filling and closing operations, but it also is possible to manufacture to storage. The can body can be cylindrical, rectangular, or combinations thereof, but most are cylindrical. Commercial or prototype paperboard cans range in size from 2 to 10 in. (0.8–3.9 cm) high, and up to 6 in. (2.4 cm) in dia, but mostly are confined to a maximum 5.25-in. (2-cm) dia and 3–10-in. (1.2–3.9-cm) heights.

In the CanShield construction, the paperboard sidewall is rolled into a cylindrical shape and the two edges are overlapped and sealed. Continuous thermofusion along the seal is effected by bringing the coating on one or two edges of the blank to a molten state, i.e., by direct contact with a heated plate, or more recently, by blowing hot air onto the edge, bringing the two edges together, and applying pressure. Usually a polyolefin, e.g., polyethylene, is used on the surface of the board to provide the adhesive factor. A disk of paperboard with a diameter approximating that of the cylinder is crimpfolded around its perimeter to form an inverted shallow cup. This base piece is positioned in one end of the hollow cylinder so that the bottom edge is about 1/4 in. (0.64 cm) below the edge of the cylinder. The edge of the inner periphery is heated and crimpfolded over to lock and seal the disk in place. In this manner, the outer peripheral of the base is sealed to the inner perimeter of the cylinder wall. The segment of the outer wall extended beyond the inner disk then is heated and folded over to come in contact with the inner side of the disk. A spinning mandrel applies pressure to the base of the cylinder to effect the final seal.

The result is a primary seal between the bottom disk and the sidewall and a secondary seal, wherein the sidewall is folded over, which captures the disk with an additional seal. For the rectangular version, the base piece is forced against the body wall under pressure using an expanding mandrel to seal the base to the body. Here too, the material for sealing is usually polyethylene, and hot air is used to bring the material to a molten state to act as a sealant. On the round containers, the top is usually rolled out and the closure, e.g., a foil membrane, is adhered to the top rolled edge after the product has been placed into the paperboard can. On the rectangular version, the top rolled edge is generally closed by a rim closure that clamps onto the periphery of the opening and is sealed into place by induction or by glue. The rim then acts as a holder for a full panel closure.

The Ultrakan concept is similar to the CanShield in that the body wall is wrapped around a mandrel and the two edges are overlapped and heat-sealed to each other. The bottom disk is inserted in the container, and the body wall and bottom disk are heated and crimped or rolled together. Thermoplastic hot-melt adhesive may be used for added security and seal strength. The interior edge of the sideseam can be skived to enhance WVTR or greaseproofness of the container, or both. The top of the Ultrakan container can be finished in a variety of ways that include the following: rolled outward (to accept a membrane seal); flared (for a variety of seamed metal ends); rolled inward (for special thermoformed or injection-molded plastic closures); or gently flared (for insert rotor/dispenser style closures). The Ultrakan system also provides the option of customizing by special bottom techniques, which offer dispensing features for granulated products, powders and paste, or semiliquid sauces or condiments.

A high barrier paperboard can has been introduced from Sweden (Cekacan). By incorporating the use of polyolefin

Table 1. Comparative Water-vapor Transmission[a]

Product	Conventional Package	Rate of Moisture Pickup at 75°F (24°C) and 100% rh, wt % per Week	
		Conventional Package	Cekacan
Dehydrated sweetened beverage powder	26.5-oz (751-g) composite can	0.03	0.0075
Powdered soft-drink mix	34.0-oz (964-g) composite can	0.02	−0.0025
Sweetened cereal product	12.0-oz (340-g) bag-in-box	0.2	0.04
Snack	7.5-oz (213-g) composite can	0.01	−0.01

[a] Courtesy of the Center for Packaging Engineering, Rutgers, The State University of New Jersey.

laminates (see Laminating) along with foil and a special means of sealing the package, a hermetic seal has been demonstrated, which makes the package virtually impermeable to gas, liquid, fat, etc. (see Table 1). The Cekacan system involves both a canforming operation and a can-closing operation. In the forming operation, the sidewall is wrapped around a mandrel and butt-seamed (not overlapped). Just prior to the wrapping operation, a foil-laminated tape is induction-sealed to one edge of the blank. With the seam butted, an induction sealer affixes the tape to the interior of the can in such a way as to provide a continuous hermetic seal along the longitudinal seam.

The package is transfered to an end-closing device, wherein a top or bottom closure is affixed. In this case, the closure is inserted into the can with the closure sidewalls flanged to the vertical position. Through the use of pressure and induction sealing, the disk is hermetically sealed into place. The package is then discharged for filling and brought back to the second piece of equipment, which inserts and hermetically seals the final closure. Closures are available that provide easy opening without compromising the gastight integrity of the package. Through the use of a butt seam, held together with sealable tape, no discontinuous joints to bridge exist. Ends are inserted, and fused by induction sealing, to the smooth interior wall. During the induction-sealing process, the fluid flow of the internal coating, usually polyolefin, fills any short gaps that may occur. The equipment is simple to operate and does not require special expertise.

A special attribute of all the in-plant paperboard-can packaging systems is the reduction of materials storage and handling. Because the body walls are shipped flat along with the bottom disk and top closures, a minimal amount of storage space is necessary. The average space needed to contain the paperboard can in its flat form represents approximately 97% savings over a similar number of composite or metal cans or glass jars. Additional savings are realized by the reduced cost of shipping the container components to the plant and also in the weight of the final product.

Materials. Basic paperboard-can-body structures are made of laminations of paperboard, aluminum foil, and polyolefins. End structures are analogs that might omit the paperboard for some applications. The generalized structure is paperboard/bonding, agents/aluminum, foil/polyolefin (outside-to-inside). Engineering the components to each other and the structure to the package has been a significant advance. The material components must be functional, economic, structurally sound, and compatible with the contained product.

The paperboard component of the lamination is not critical to the hermetic function of the Cekacan, but it is essential to the commercial value of the system. The exterior surface must be smooth and printable and the interior surface must be sufficiently tied to ensure adhesion to the adjacent layer. Because the paperboard-can body is composed of a single-ply material (as opposed to the multiple plies in composite cans), ranging from 0.016- to 0.032-in. (406–813-μm) finished caliper, the appropriate finished caliper must be chosen to meet the physical stress. At the same time, the economics of the additional caliper board must be weighted against the cost.

Structures can be engineered for each product's specific requirements. Interior polyolefins may be polyethylenes or polypropylenes. They can be applied by extrusion, coextrusion, extrusion–lamination, or adhesion–lamination (see Extrusion coating; Laminating). In the case of a gastight container, a crucial variable is the bonding of the interior polyolefin to the aluminum foil or paper substrates. This adhesion must be maintained above preestablished minimums in converting, body erecting, sealing, and operation. This process is a demanding requirement.

REFERENCES

"Cans, Composite Self-Manufactured" in J. M. Lavin, ed., *The Wiley Encyclopedia of Packaging*, 1st edition, Wiley, New York, Container Corporation of America, 1986, pp. 98–100.

CANNING, FOOD

Joseph H. Hotchkiss
Cornell University,
Ithaca, New York

INTRODUCTION

Canning may be defined as the packaging of perishable foods in hermetically sealed containers that are to be stored at ambient temperatures for extended times (months or years). The objective is to produce a "commercially sterile" food product. *Commercially sterile* does not mean that the food is free of micro-organisms, but rather that the food does not contain viable organisms that might be a public health risk or might multiply under normal storage conditions and lead to spoilage. Canning processes do not necessarily kill all micro-organisms present in a food, and it may be possible to isolate viable organisms from canned foods. The food product may be made commercially sterile either before or after filling and sealing. Three conditions must be met for canning safe and wholesome food:

1. Sufficient heat must be applied to the food to render it commercially sterile.
2. The container must prevent recontamination of the product.
3. The filled and sealed container must be handled in a manner that prevents loss of integrity.

Canning was invented as a means of food preservation in 1810 in response to a prize offered by Napoleon. The original containers were corked glass; handmade tinplate "canisters" (shortened to "cans") were introduced shortly afterward. Cans used prior to 1990 were manually produced from a cylindrical body, an end unit or disk, and a top ring. All seams were formed by dipping in hot solder. The food was filled through the hole in the top ring and a plate that contained a small hole was soldered over the opening. Cans were heated to exhaust the headspace so that a partial vacuum would be created after sealing and cooling. A drop of solder was used to seal the small hole, and the can was then thermally processed.

Around the turn of the century, the process for manufacturing the three-piece open-top can became widely available. This container used the same double-seamed ends that are in use today. The second end was not put on until the can was filled, which meant that food no longer had to be forced through the hole in the ring.

Today the tin-plated steel double-seamed can is still the predominant food canning package (see the Can seamers; Cans, steel article in this encyclopedia). Glass is also used for some products (see the Glass container design article in this encyclopedia). Recently, flexible pouches (see the Retortable flexible and semi rigid packages article), rigid plastics (see the Cans, plastic article), and thin aluminum (see the Cans, aluminum article) cans have been used to can foods. Processes have also been developed in which the food and container are commercially sterilized separately, often by different methods, and the container is filled and sealed without recontamination (see the Aseptic packaging article).

Food canning accounts for just over 30% of U.S. metal can shipments (1) and just under 30% of glass container shipments. Approximately 1700 canning plants process about 36 billion (10^9) pounds (16.33×10^6 metric tons) of food per year (2). The importance of canning in marketing food products varies widely. Virtually all tuna is canned, as is 90% of the tomato crop (2). Other foods rely less on canning.

PROCESS DESCRIPTION

The processing of canned food must produce a commercially sterile product and minimize degradation of the food. The container must also withstand the process and prevent recontamination of the product after processing and up to the time of use, often months or years after processing. The most common sequence of events in canning is that the food product is prepared for canning, the container is filled and hermetically sealed, and the sealed container is thermally processed to achieve commercial sterility. The thermal process necessary to commercially sterilize a canned product depends on the acidity of the food.

Role of pH. High-acid foods such as fruits and fruit juices, pickled products, and products to which acid is added in sufficient amounts to give a pH of 4.6 or lower require considerably less heat treatment than low-acid foods ($pH > 4.6$). Low-acid foods include most vegetables, meats, fish, poultry, dairy, and egg products. High-acid foods may be processed at boiling water temperature (212°F or 100°C) after sealing. High-acid liquid foods, such as fruit juices, may also be sufficiently processed by "hot filling" the container with product near the boiling point and allowing slow cooling after sealing. Low-acid foods ($pH > 4.6$) must be processed at temperatures above the boiling point of water. Most often this is accomplished in a pressurized vessel called a retort or autoclave, which contains water or steam at 250°F at 15 psi (121°C at 103 kPa).

Time and Temperature Requirements. The process or scheduled process refers to the specific combination of temperature and time used to render the food commercially sterile. Several factors affect this process, including the nature of the product, shape and dimensions of the container, temperature of the retort, the heat-transfer coefficient of the heating medium, the number and type of micro-organisms present, and the thermal-death resistance of these micro-organisms.

The relationship among the heat destruction of specific organisms, heating time, and temperature has been intensely studied since the 1920s, and equations have been derived for several organisms, the most important of which is *Clostridium botulinum* (3). This spore-forming organism is found in soil, is ubiquitous, and grows in anaerobic environments such as canned foods; it produces a deadly toxin. Its spores are also highly heat resistant. When commercially sterilizing a canned product, it is the temperature profile of the coldest spot in the container, which must be known before the correct process can be calculated. This is accomplished by placing a thermocouple inside the can, usually at the geometric center for products heated by conduction or in the lower portion of the can for products heated by convection. The temperature is recorded during heat processing and used to calculate the proper process time under the given conditions of product, container size and geometry, and retort temperature. This information coupled with the thermal death characterstics of *Cl. botulinum* or a more heat-resistant organism is used to determine the correct process time. Often these processes are described in terms of F values.

***F* Value.** An F value is the time in minutes to heat-inactivate a given number of certain micro-organism at a fixed temperature (4). If the temperature is 250°F (121°C) and the organism is *Cl. botulinum*, then the F value is called F_o. This value is the number of minutes required to kill a given population of *Cl. botulinum* spores at 250°F (121°C). Combinations of times and temperatures other than 250°F and F_o minutes can inactivate the same number of spores; temperatures lower than 250°F for longer time periods or temperatures greater than 250°F for shorter times have an equal ability to inactivate the spores. An $F_o = 2.45$ min reduces the population of *Cl. botulinum* spores by a factor of 10^{12} (5). In practice, F_o values of greater than 3 are used as a safety measure. To prevent overprocessing (overcooking) of the food, the spore inactivation (called lethality) is summed up during the time the coldest spot in the can is coming up to the retort temperature. Some viscous conduction-heated foods may never completely reach the common retort temperature of 250°F (121°C) yet still receive the proper F_o treatment. The Food and Drug Administration (FDA) regulations require that these tests and calculations be carried out only by recognized authorities (6).

Interest in thermal processes resulted in techniques that commercially sterilize fluid foods in continuous-flow heat-exchange systems before packaging (7). The thermal death calculations described above still apply to these processes, and proper F values must be achieved (8). The continuous-flow commercial sterilization procedures have the advantage that products can be heated and cooled more rapidly for shorter times with equal lethality. This can give a higher quality product. These products must be filled into presterilized containers (see the Aseptic packaging article).

CANNING OPERATIONS

The canning process requires several unit operations that normally take place in a set sequence (9).

Product Preparation. As soon as the raw agricultural product is received at the canning plant, it is washed, inspected, sorted to remove defective product, and graded. Often, the edible portion is separated from nonedible as in the case of peas or corn. Fruits and vegetables are subjected to a blanching operation by exposing them to either live steam or hot water at 190–210°F (88–99°C). Blanching serves to inactivate enzymes that would otherwise cause discoloration or deterioration in the product. It also softens, cleans, and degases the product. Peeling, coring, dicing, and/or mixing operations may be carried out next. These operations prepare the product for filling into the can.

Container Preparation. Containers must be washed thoroughly immediately prior to filling. Cans are washed inverted so that any foreign objects and the excess water can drain out. The container is now ready for filling. Accurate and precise filling is necessary to meet minimum labeled fill requirements yet leave sufficient headspace for development of the proper vacuum after closure. Too large a headspace results in an underweight container, whereas overfilling can result in bulging or domed ends after processing. Excessive headspace may also suggest that large amounts of oxygen remain in the can, which accelerates product deterioration and can corrosion. Liquid or semiliquid products including small pieces are filled by automated equipment. Larger, more fragile products, such as asparagus, are packed by hand or by semiautomated equipment. In most products, brine, broth, or oil is added along with the product. This liquid excludes much of the air between the particles and provides for more efficient heat transfer during thermal processing.

Vacuum. Proper application of the closure after filling is one of the most critical steps in the canning operation. The two-step seaming operation not only must produce a sound, well-formed double seam at speeds of several hundred cans per minute but also must produce an interior vacuum of 10–20 in. Hg (34–68 kPa) (10). This vacuum reduces the oxygen content, retards corrosion and spoilage, leaves the can end in a concave shape during storage, and prevents permanent distortion during retorting. A proper internal vacuum can be achieved by several methods. Containers that are sealed while the food is at or near the boiling point develop a vacuum when the product cools. This preheating or hot fill also serves to sterilize the container when high-acid foods are packaged. Products that are cool when filled can be heated in the container prior to sealing with the same result as the hot fill. This is often termed "thermal exhaust." An internal vacuum may also be achieved by mechanical means. The filled, unsealed container is fed into a vacuum chamber by means of an air lock, and the closure is sealed while under vacuum. This system has the disadvantage that flashing of the liquid may occur if air is entrapped in the food or high levels of dissolved air are found in the liquid. The most common method of producing internal vacuum is by displacing the air in the headspace with live steam prior to and during double seaming the cover. The steam in the headspace condenses and forms a vacuum as the container cools.

Retorting. In conventional canning operations of low-acid foods, the sealed containers are next thermally processed at 250°F (121°C) in retorts. Recent regulatory agency rule changes allow specific flexible containers to be processed at 275°F (134°C).

Several distinct types of commercially manufactured retorts are available for thermally processing canned food (11). Although all, by necessity, operate at pressures above 15 psi (103 kPa), the design characteristics of each type are considerably different. At least six design variables exist: (a) discontinuous (batch) types versus continuous container processing, (b) the heating medium used to transfer heat to the container, (c) the agitation or nonagitation of containers during processing, (d) the layout of the pressure vessel (vertical vs horizontal), (e) the method used to load and unload the containers from the retort, and (f) the cooling procedures used after thermal processing.

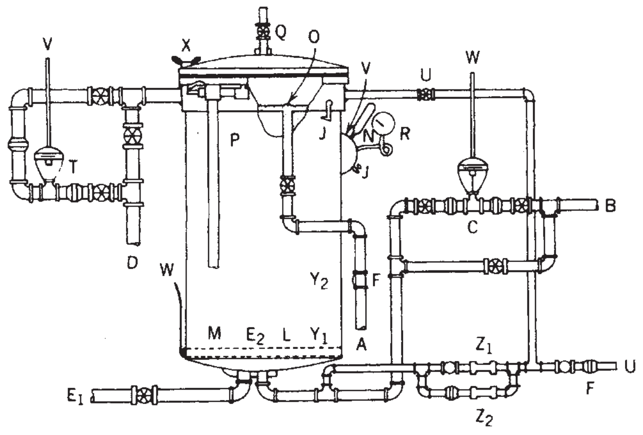

Figure 1. Vertical still retort (21 CFR, Part 113).

A—Water line.
B—Steam line.
C—Temperature control.
D—Overflow line.
E_1—Drain line.
E_2—Screens.
F—Check valves.
G—Line from hot water storage.
H—Suction line and manifold.
I—Circulating pump.
J—Petcocks.
K—Recirculating line.
L—Steam distributor.
M—Temperature-controller bulb.
N—Thermometer.
O—Water spreader.
P—Safety valve.
Q—Vent valve for steam processing.
R—Pressure gauge.
S—Inlet air control.
T—Pressure control.
U—Air line.
V—To pressure control instrument.
W—To temperature control instrument.
X—Wing nuts.
Y_1—Crate support.
Y_2—Crate guides.
Z—Constant flow orifice valve.
Z_1—Constant flow orifice valve used during come-up.
Z_2—Constant flow orifice valve used during cook.

The simplest retorts are batch (discontinous) retorts that use pure steam as the heating medium and do not have provisions for mixing (agitation) of the container contents during processing. These retorts are termed still retorts (Figure 1). Temperature inside still retorts is maintained by automatic control of the steam pressure.

Loading and unloading the containers from discontinuous still retorts are accomplished by preloading containers into crates, baskets, cars, or trays. “Crateless” systems randomly drop containers into the retort vessel, which is filled with water to act as a cushion and prevent container drainage (Figure 2). The water is drained prior to processing. The orientation of the retort depends on the type of container handling system. Systems that use crates or baskets and the crateless systems, by necessity, use vertical vessels, whereas car handling necessitates a horizontal orientation.

Glass, semirigid, and flexible containers must be processed in still retorts that have been designed to accommodate the fragility of these containers at retort temperatures and pressures. These retorts operate at pressures greater than the 15 psi (103 kPa) of steam required to reach 250°F (121°C) to counterbalance the internal pressure developed in the container. This is termed “processing with overpressure.” The pressure buildup inside individual containers during processing would result in the loss of seal integrity in heat-sealed containers (see the Sealing, heat article) and could loosen the covers of glass containers or permanently distort semirigid plastic containers. Four design changes in still retorts must be made to process with overpressure:

1. Either steam or air overpressure must be automatically controlled. Pressures of 25–35 psi (172–241 kPa) are typical.
2. Control of the retort temperature must be independent of retort pressure.
3. Mixed heating media of either steam—air, water–air, or water–steam are used in place of pure steam. Heat transfer is less efficient in these mixed-heating media. For this reason, some means of circulating or

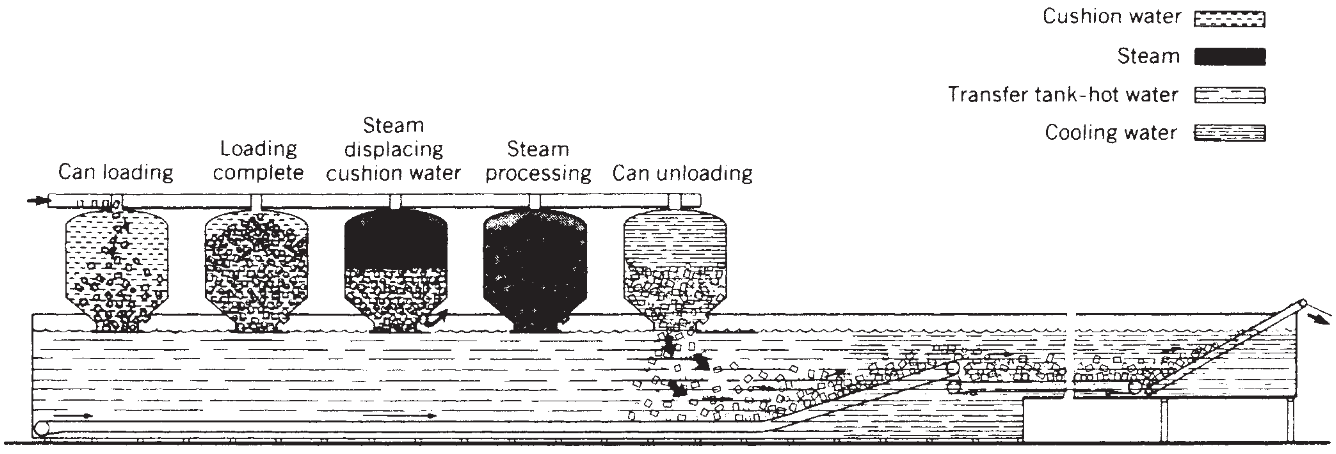

Figure 2. FMC crateless retort system. (Courtesy of FMC Corporation, Food Processing Machinery Division.)

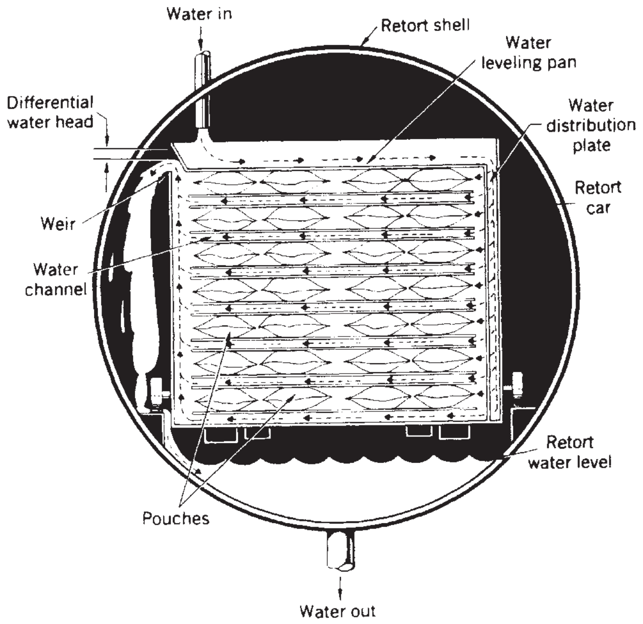

Figure 3. FMC convenience foods sterilizer, showing water flow and pouch restraints. (Courtesy of FMC Corporation, Food Processing Machinery Division.

mixing the heating medium is necessary. For steam–air mixtures, fans may be provided. Water–air and water–steam systems use circulating pumps.

4. Provisions to prevent stress on the containers caused by motion during processing are made.

These designs may be incorporated into either vertical or horizontal retorts depending on how the containers are handled. Glass containers are typically loaded into crates or baskets for processing in vertical water–air or water–steam retorts. Flexible retortable pouches are often loaded into trays and cars (which also serve to maintain the proper shape of the pouch) and moved into horizontal retorts for water–steam or steam–air processing (see Figure 3).

Still retorts, whether designed for metal cans or other containers, are batch (discontinous) systems. The hydrostatic retort is technically a still retort (product is not agitated) that continuously processes containers. The retort operates at a constant temperature (and pressure) as the containers are carried through the retort by a continuously moving chain (Figure 4). The required 15 psi (103 kPa) of steam pressure inside the retort (or steam dome) is maintained by two columns of water, which also serve as pressure locks for incoming and outgoing containers. These columns of water (called feed and discharge legs) must be greater than 37 ft (11.3 m) high to maintain at least a minimum 15-psi (103-kPa) steam pressure. Hydrostatic retorts have the highest throughputs; are efficient in their use of floorspace, steam, and water; can process a variety of container sizes and types (including flexible); and are highly automated. They have the disadvantage of high capital costs and are therefore applicable only to high-volume operations.

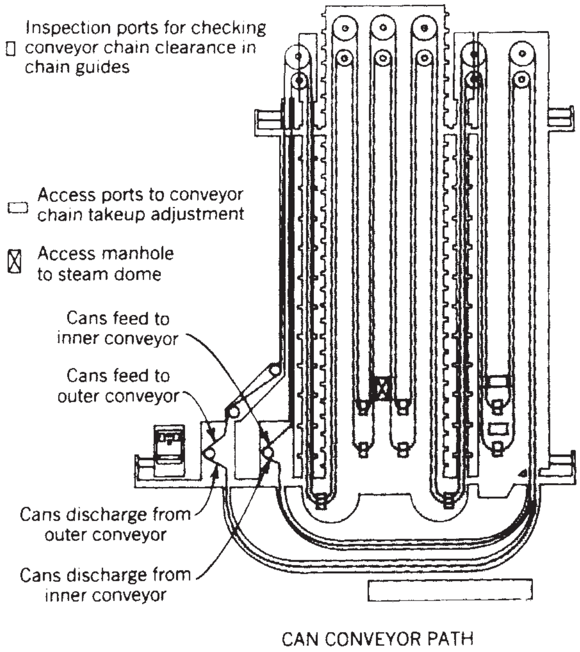

Figure 4. Flow diagram of a hydrostatic sterilizer for canned foods. (Courtesy of FMC Coporation, Food Processing Machinery Division.)

The heating time necessary to ensure that the coldest spot in the container receives the proper lethality depends somewhat on the consistency of the product. For viscous products such as canned pumpkin and baked beans, the primary heat-transfer mechanism is conduction. Products that have a thin consistency or are packed with brine (canned peas) are heated by convection. The transfer of heat to the center of the container can be greatly facilitated if internal mixing occurs in the can during retorting. This results in a shorter processing time and higher quality product.

Retorts that are designed to increase convection heating by container motion during processing are termed agitating retorts. Both end-over-end and axial rotation are used, but the latter predominates. Glass, semirigid, and flexible containers are not agitated because of fragility. Agitating retorts may be either batch or continuous types. Continuous retorts predominate because they have

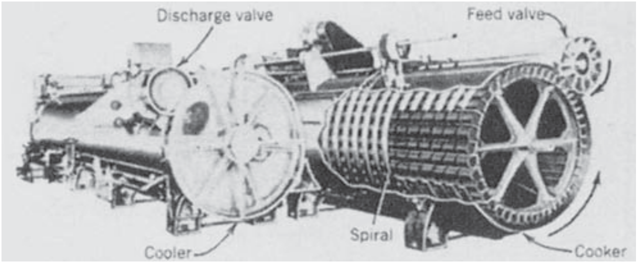

Figure 5. Cutaway view of a continuous rotary cooker–cooler's turning wheel and interlock. (Courtesy of FMC Corporation, Food Processing Machinery Division.)

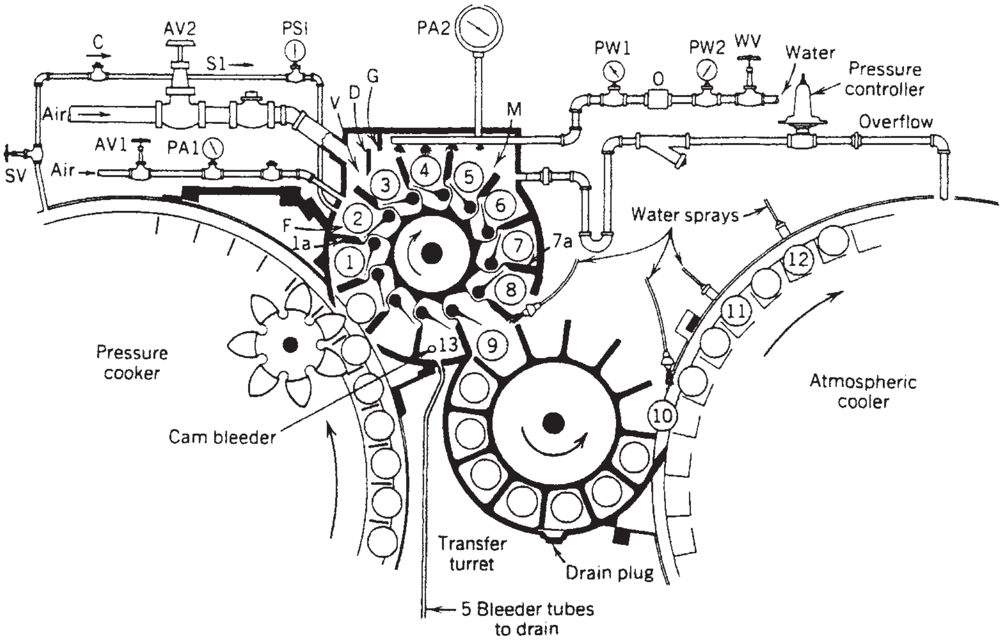

Figure 6. Transfer valve between cooking and cooling vessels of a continuous cooker–cooler.

R	Rotor containing can pockets and ejector paddles.	PW1	Downstream water pressure gauge.
SV	Forespace steam valve.	O	Orifice for flow control.
M	Microcooling chamber.	Overflow	Release line for excess air or water.
F	Forespace for pressure equilization.	S1	Steam line.
D	Water dam.	C	Check valve.
G	Splash guard.	PSI	Pressure vacuum gauge.
Air	Pressure regulated air supply.	1.	Hot can.
V	Vestibule.	1a.	Valve-leading edge.
AV1	Forespace regulated air inlet valve.	2.	The can receive some water splash.
AV2	Microcooling space air inlet valve.	3.–7.	The cans are fully exposed to water flow.
PAI	Forespace air pressure gauge.	7a.	Valve-trailing edge.
PA2	Microcooling space air pressure gauge.	8.	Can is about to leave microcooler valve.
Water	Water inlet and perforated distributor.	9.–12.	Cans are subject to sprays of water.
WV	Water inlet regulator valve.	13.	Drain pocket.
PW2	Upstream water pressure gauge.		

(Courtesy of FMC Corporation, Food Processing Machinery Division.)

greater efficiency and throughout but are less easily adapted to changes in container size.

The continuous rotary cooker–cooler (see Figure 5) has become widely used for large-volume operations in which convection-heated products such as vegetables in brine are packed in metal cans. This system feeds individual cans into and out of the pressurized vessels by means of rotary pressure lock valves. Cans are rotated around the inside of the vessel's shell by means of an inner rotating reel and a series of spiral channel guides attached to the shell (Figure 5). This system provides for intermittent agitation of the cans by providing rotation about the can axis during a portion of the reel's rotation inside the vessel. This system has the disadvantage that container size cannot be easily changed.

Regardless of retort design, consideration must be given to cooling containers after processing. For glass, flexible, and semirigid containers, cooling with overpressure is necessary. These containers would fail because of the internal pressure developed during heating should the external pressure drop. Even metal cans may buckle and panel if brought to atmospheric pressure while the contents are at 250°F (121°C). In batch-type still retorts, overriding air pressure with water cooling is used. Hydrostatic retorts (continuous still retorts) cool containers by removing heat from the water in the discharge leg. If more cooling is necessary, an additional cooling section is added and cool water is cascaded over the containers. Continuous agitating (rotary) systems cool under pressure by transferring containers to pressurized cooling vessels by means of rotating transfer valves (Figure 6). The second-stage vessels are maintained at elevated air pressures while the containers are cooled with water. A third-stage atmospheric cooler may also be incorporated.

In addition to the pressurized heating and cooling vessels, all retort systems require a set of precise instruments and controls. Regulations require a direct reading mercury-in-glass thermometer as well as temperature recording devices. A continuous temperature controller must be installed. For retorts that use pure steam, this may be a pressure controller; processing with overpressure requires a direct temperature controller. Retorts require reliable sources of steam, air, and water. A pressure reading device is required as well as an accurate recording timing device so that the scheduled process can be insured and the proper records maintained. All instruments must undergo periodic calibration.

REGULATION

The canning of foods is carefully regulated by the FDA, or in the case of canned meats and poultry, the United States Department of Agriculture (USDA). These agencies recognize the serious public health implications of improperly processed foods. The FDA has developed a complete set of regulations commonly referred to as the Good Manufacturing Practices (GMPs) for canning foods. These regulations govern the type of equipment used to can foods and the procedures, the frequency of inspection of containers and equipment, and the records that must be kept, and they provide for the filing of individual processes prior to production. The regulations pertaining to food canning are contained in Title 21 of the Code of Federal Regulations (CFR) under the following sections: (a) 21 CFR Part 108, "Emergency Permit Control"; (b) 21 CFR Part 113, "Thermally Processed Low-acid Foods Packaged in Hermetically Sealed Containers"; and (c) 21 CFR Part 114, "Acidified Foods."

Part 108 stipulates that food-canning plants must register their establishments and specific processes with the FDA. This section also contains provisions for issuing emergency permits to firms that the FDA believes do not fully meet the regulations. Part 113 is the most extensive section and details the equipment, procedures, process controls, establishment of correct process, critical factors, and necessary records for canning low-acid foods. This section also details the procedures to be used in evaluating the integrity of the double seams. Part 114 describes the GMP requirements for packaging high acid foods ($pH \leq 4.6$). This section includes general provisions as well as specific requirements for production and process control.

The USDA's Food Safety and Inspection Service (FSIS) has regulatory authority over canning poultry and meat products and has promulgated a series of regulations under Title 9 of the CFR. Current FSIS regulations are considerably more general than FDA regulations and have not kept pace with changes in canning technology. Meat and poultry canning operations are subject to continuous inspection in a manner similar to other FSIS-regulated plants. These regulations are contained in sections 318.11 and 381.49, which deal with the cleaning of empty containers, inspection of filled containers, coding, use of heat-sensitive indicators (see Indicating devices), and incubation of processed products. In 1984, FSIS proposed a more detailed set of regulations similar to those promulgated by the FDA for canning low-acid foods. The sections of the CFR that deal, in part, with meat and poultry canning, and related requirements will be 9 CFR 308, 318, 320, and 381.

TRENDS

The food-canning industry has undergone substantial changes, most notably in the area of containers (12). Changes are ongoing in the retort systems. Rotation, oscillation, gentle motion, and shaka are the various terms used by vendors to promote their particular system. The major trends are in the uses of semirigid and flexible pouches.

The industry is increaingly using the flexible pouch and semirigid containers, taking advantage of the thinner profile of these containers that can result in faster heating and higher quality food. Also the shipping cost of the empty can and glass jars to the retort facility is becoming more of an issue.

Metal as well as glass cans will have increasing competition from plastics and composite materials (14).

Development of thermal processes in which the food is commercially sterilized before packaging is ongoing. This allows food to be thermally processed in continuous-flow, heat-exchange systems that can result in higher quality products and allow the use of less expensive containers based on paperboard or thin plastics. This technology is used for juices, drinks, and milk. Recent products include soups, stews, and vegetables (8).

BIBLIOGRAPHY

J. H. Hotchkiss, "Canning Food," in *The Wiley Encyclopedia of Packaging Technology*, 1st edition, Wiley, New York, 1986, pp. 86–91; 2nd edition, 1997, pp. 123–128.

1. S. R. Friedman in W. C. Simms, ed., *The Packaging Encyclopedia—1984*, Cahners Publishing, Boston, MA, **29**(4), 334 (1985).
2. A. Lopez, *A Complete Course in Canning*, 11th edition, Book 1, *The Canning Trade, Inc.*, Baltimore, MD, 1981, p. 9.
3. I. J. Pflug and W. B. Esselen in J. M. Jackson and B. M. Shinn, eds., *Fundamentals of Food Canning Technology*, AVI Publishing, Westport, CT., 1979, pp. 10–94.
4. N. N. Potter, *Food Science*, 3rd edition, AVI Publishing, Westport, CT, 1978, pp. 177–193.
5. Ref. 2, p. 330.
6. *Establishing Scheduled Processes*, Code of Federal Regulations, Title 21, Part 113.83, U.S. Government Printing Office, 1983, Washington, DC, p. 112.
7. D. Wernimont, *Food Eng.* **55**(7), 87 (1983).
8. A. A. Teixeira and J. E. Manson, *Food Technol.* **37**(4), 128 (1983).
9. Ref. 4, pp. 550–557.
10. Ref. 2, pp. 217–219.
11. *Canned Foods: Principles of Thermal Process Control, Acidification and Container Closure Evaluation*, 4th edition, The Food Processors Institute, Washington, DC, 1982, p. 162.
12. B. J. McKernan, *Food Technol.* **37**(4), 134 (1983).

13. "Welded Can Expected to Capture 3-Piece Can Market," *Food Prod. Manage.* **104**(12), 12 (1982).

14. J. Haggin, *Chem. Eng. News*. **62**(9), 20 (1984).

General References

A. Lopez, *A Complete Course in Canning, 11th edition, Books 1 and 2*, The Canning Trade, Inc., Baltimore, MD, 1981, pp. 556.

J. M. Jackson and B. M. Shin, *Fundamentals of Food Canning Technology*, AVI Publishing, Westport, CT, 1979, pp. 406.

Canned Foods: Principles of Thermal Process Control, Acidification and Container Closure Evaluation, 4th edition, The Food Processors Institute, Washington, DC, p. 246.

CANS, ALUMINUM

Terre Reingardt
Ball Corporation, Westminster, Colorado
N. F. Nieder
Amheuser-Busch
Updated by Staff

INTRODUCTION

Over 98% of all aluminum cans are drawn-and-ironed (D & I) cans used for beer and soft drinks (see Cans, fabrication; Carbonated-beverage packaging). The other 1–2% is accounted for by small shallow-draw food cans. In the United States, production of aluminum beverage cans has reached about 100 billion/yr (1). Virtually all beer cans are aluminum, and 100% of all soft-drink cans are aluminum. Until 1965, the three-piece soldered can was the only can used for beer and beverages (see Cans, fabrication; Cans, steel). It was generally made of 75-lb per base box (16.8 kg/m^2) tinplate (see Tin-mill products). Aluminum does not have the strength of steel per unit weight and cannot be soldered. Therefore, early in the development of the aluminum can, attention was focused on improving the properties of aluminum and perfecting two-piece D & I technology. More recently, the emphasis has been on saving metal, because the cost of metal is the single largest component of final product cost. One of the chief reasons for the success of aluminum cans has been their scrap value for recycling (see Energy utilization; Recycling). This article pertains to the technical developments that have led to today's aluminum beverage can.

HISTORICAL DEVELOPMENT

The significant developments took place in the late 1960s. Earlier, in 1958, Kaiser Aluminum attempted to make a 7-oz (207-mL) aluminum can using a 3003 soft-temper aluminum of the type used for aluminum-foil production, but the effort was not a commercial success. In the universe of aluminum alloys, the 3-series alloys contain a small percentage of manganese as the principal alloying element. The success of the aluminum can depended on the development of the 3004 alloy for the can body, which contains manganese along with a slightly lower amount of magnesium. (The softer 5182 alloy for can ends contains a higher amount of magnesium.) Reynolds Metals Co. began making production quantities of 12-oz (355-mL) seamless D & I cans in 1964 using a 3004 alloy. The walls of these first cans were straight, with a top diameter of "211": $2\frac{11}{16}$ in. (68.26 mm). The starting gauge was 0.0195 in. (0.495 mm); can weight was 41.5 lb/1000 (18.8 kg/1000).

Reynolds introduced the first necked-in cans (see Figure 1) in 1966, reducing the top diameter from 211 to 209, that is, $2\frac{9}{16}$ in. (65.09 mm). This represented a breakthrough in technology and container performance, particularly as it is related to cracked flanges. Cracked flanges were a serious problem in both double-reduced tinplate and straight-walled aluminum cans. The introduction of carbide knives at the slitter essentially eliminated cracked flanges on tinplate cans. Eliminating them on aluminum cans required a change from die flanging to spin flanging, and necking-in before flanging, which does not stretch the metal beyond its elastic limits.

In 1968, a new harder-temper (H19) 3004 alloy was introduced for aluminum cans. Although the 3004–H19 combination had been available since the 1950s for other purposes, it was not until 1968, when Alcoa and Reynolds were in commercial production with full-hard-temper can sheet, that it could be used to effect significant weight reductions. Weight/1000 cans decreased from 41.5 lb (18.8 kg) in the mid-1960s to 34 lb (15.4 kg) in the mid-1970s and to less than 30 lb (13.6 kg) in the mid-1980s. Both 3004–H19 and 3014-H19 are used today.

Gauge reductions have increased the point where design techniques have become critical to sustaining the can's ability to hold the product. With few exceptions, U.S. brewers pasteurize beer in the can. This generates high internal pressures, and most cans used for beer must be designed so that they have a minimum bottom buckle

Figure 1. A necked-in can.

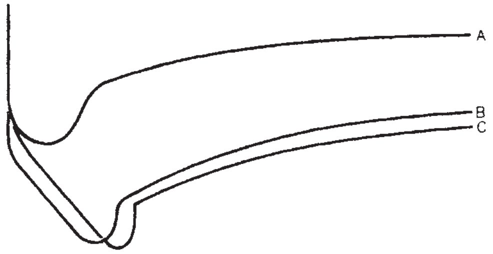

Figure 2. Can-bottom profiles: A, original bottom profile; B, Alcoa B-53, V-bottom profile; C, Alcoa B-80. (Courtesy of Alcoa.)

strength of 85–90 psi (586–620 kPa), depending on the carbonation level. Brewers were asking for cans with minimum column strength (i.e., vertical crush) of 300 lbf (1330 N).

A revolution has taken place in bottom profiles (see Figure 2). The original D & I bottom had a rather generous bottom-heel radius. In order to meet the 90-psi (620 kPa) minimum bottom buckle-strength requirement, a 211 can with this configuration would have to be made with a starting gauge of 0.016–0.0165 in. (406–419 µm). The next profile development, basically the Alcoa B-53 design, is widely used throughout the beer industry today because it allows the starting gauge to go as low as 0.013 in. (330 µm), in most cases without sacrificing the 90-psi (620-kPa) minimum bottom buckle strength. The Alcoa B-80 profile allows starting-gauge reduction to ~0.0126 in. (~320 µm).

An "expandable bottom" design might permit use of a 0.010-in. (254 µm) starting gauge for pasteurized product. In contrast to the current dome profiles, an expandable bottom is essentially a flat bottom with small pods located near the perimeter to provide stability to the pressurized can, reduce drag, and increase mobility. A totally flat bottom would drag too much on the filling line. The "expandable" bottom is designed to flex outward during pasteurization, relieving some of the generated pressure.

Sidewalls are still being redesigned (see Figure 3). In the 1970s, the so-called nominal thinwall (i.e., the area of the can that has been thinned most) generally ranged from 0.0052 to 0.0053 in. (132–135 µm). More recent versions of the D & I can have reduced the nominal sidewall to 0.0045 in. (114 µm). A reduction of this magnitude represents substantial cost reduction. It also means a corresponding reduction in the overall column strength (vertical crush) of the can, not below the minimum 300 lbf (1330 N) but in terms of overall operating average. Column strength is very critical to the brewers, who ship long distances by truck and rail. Extensive testing by the can companies and the beer and beverage industry in general has shown that the 300-lbf (1330-N) minimum is satisfactory. Because of the reduction in body-wall thickness, dents that were acceptable before have now become critical owing to their influence on reducing the can's column strength. Can makers and brewers are monitoring their handling systems for empty and full cans to minimize denting wherever possible.

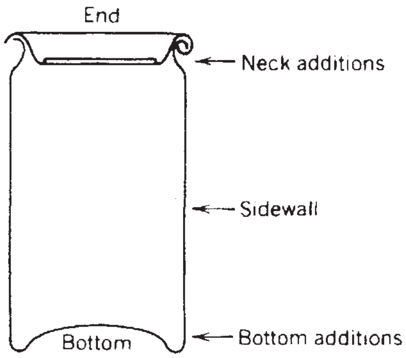

Figure 3. Design elements.

Figure 4. Double-, triple-, quadruple-, and spin-neck can.

In the 1980s, can suppliers reduced costs further by double "necking-in" (see Figure 4). These configurations reduced costs primarily because of the diameter reduction of the lid. In 1984, further activity with respect to necking-in began to occur. Cans with three or four die necks are now being run commercially (see Figure 4). In Japan, a can with eight necks was tested. Metal Box (UK) introduced a spin-neck can (see Figure 4), which essentially produced the same 206 top diameter as the triple- or quadruple-neck can, that is $2\frac{6}{16}$ in. (60.33 mm).

Another advantage of aluminum is the "split gauge." The industry used to sell coils in 0.0005-in. (12.7-µm) increments, for example, 0.0130 in. (330 µm), 0.0135 in. (343 µm), etc. A new pricing structure introduced in 1983 allows can-stock buyers to order gauge stock in 0.0001-in. (2.54-µm) increments. A can manufacturer can reduce costs by taking advantage of these slight gauge reductions. In addition, there has been a change in the gauge tolerance as rolled by the aluminum mills. In the 1970s, the order gauge was subject to a ±0.0005-in. (12.7 µm) tolerance; today, it has been reduced to 0.0002 in. (5.1 µm). This permits further gauge reduction because it allows the can manufacturer to reduce the order gauge without changing the minimum bottom buckle strength.

CURRENT DEVELOPMENT

Today 100% of all U.S. soft-drink cans and 95% of all beer cans are fabricated from aluminum (1). The industry has moved from 206-diameter necks on 211-diameter bodies to

204- and 202-diameter necks. These diameter changes have reduced the metal gauge and net weight from 0.0108 in. and 7.3 lb/1000 for 206 ends to 0.0088 in. and 5.3 lb/1000 for 202 ends. The primary development is with the 202 can ends, 200 is also being developed. Wide mouth cans openings are now being marketed that lower metal use by 10% (1). Resealable cans are being marketed in France. A small amount of plastic will be used at the opening and will not affect recycling (2).

Net can weights have also been reduced from approximately 30 lb/M at 0.0125 in. to 23 lb/M at 0.0108 in. This has been accomplished primarily by creating new stronger dome geometry, along with dome postreforming technology to improve performance criteria, such as dome buckle, drop resistance, and dome growth. These new dome designs are more difficult to manufacture, but provide improved performance and stacking at reduced gauges. Alcoa is lightweighting by using the thinnest aluminum possible. Finite element modeling helps with design prototypes (3). Can body gauging down has resulted in a 25–30% reduction in metal use (4).

Can sidewalls have been further reduced from 0.0045 in. down to 0.0038 in. nominal, and the number of die necks utilized to produce finished necks has increased to as many as 14 for the 202 diameter (4). Multidie necks combined with spin necking are still popular for all three neck diameters, and several canmakers are using multidie necking with spin flow necking.

BIBLIOGRAPHY

Terre Reingardt, and N. F. Nieder, "Cans, Aluminum" in *The Wiley Encyclopedia of Packaging,* 2nd edition, John Wiley & Sons, New York, 1997, pp. 132–134.

Cited Publications

1. *All About Cans,* Can Manufacturers Institute, www.cancentral.com, accessed July 2008.
2. "Coca-Cola's Resealable Can," Ball Packaging Europe, www.ball-europe.com, March 27, 2008.
3. "Heavy Duty Light Weighting," www.psc.edu/science/alcoa, accessed July 2008.
4. *Aluminum Beverage Can Innovations,* Aluminum Can Council, Washington, D.C.

CANS, COMPOSITE

M. B. Eubanks
Sonoco Products Company
Updated by Staff

INTRODUCTION

The "composite can" is broadly defined as a can or container with body and ends made of dissimilar materials. In commercial practice the composite can has several more focused descriptions: cylindrical or rectangular shape; rigid paperboard (or plastic) body construction; steel, aluminum, or plastic end closures; generally employing inside liners and outside labels; and generally delivered with one end attached and one end shipped separately to be attached by the user. Today the most common form is the cylindrical paperboard can with a liner, a label, and two metal ends. There are other packaging forms similar to traditional composite cans that are sometimes called *composites*, but which are more closely related to folding cartons. These are single-wrap fiber cans made from blanks and mainly designed for the users' in-plant production (see Cans, Composite, Self-Manufactured).

The composite can is not a new package. Early applications included refrigerated dough and cleansers. As technology improved, motor oil and frozen juice concentrates were converted to composites. In the last decade, snack foods, tobacco, edible oils, shortening, powdered beverages, pet foods, and many other items have been added to the list. Figure 1 illustrates some of the products currently available in composite cans.

Since their introduction, composite cans have generally been marketed and used as a lower-cost packaging form relative to metal, plastic, and glass. This emphasis has overshadowed other positive attributes such as the frequent use of recycled materials, weight advantages, noise reduction, improved graphics, and design flexibility. Because of its early applications in cleansers and oatmeal, the composite can once suffered from a low performance image associated with the term "cardboard can." This term cannot begin to describe the current and potential properties of the paperboard and other materials that go into today's composite cans.

By utilizing the best combination of materials, composite-can construction ensures optimum presentation and mechanical strength as well as hermetic protection. The choice of materials and production techniques for can components offers packaging solutions that are flexible and cost effective for mass consumption and luxury products as well as for numerous industrial applications.

Composite cans are normally available in diameters of 1–7 in. (3–18 cm) and heights of 1–13 in. (3–33 cm). Dimensional nomenclature for composites has been adapted from

Figure 1. Examples of composite cans in commercial use.

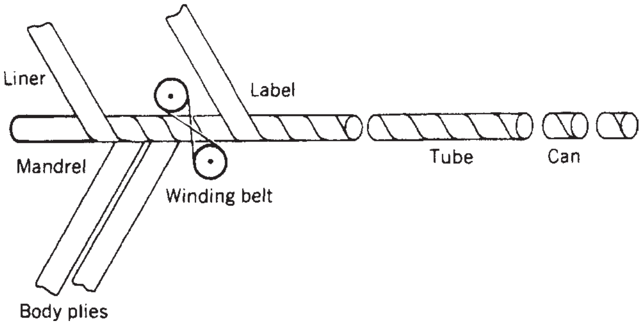

Figure 2. Spiral-wound composite-can fabrication.

metal cans, and nominal dimensions are expressed in inches and sixteenths of an inch (see Cans, Steel). Hence, a 404 diameter can has a nominal diameter of $4\,{}^4\!/_{16}$ in. (10.8 cm). Likewise, a height of $6\,{}^{10}\!/_{16}$ in. (16.8 cm) is expressed as 610, and so on.

MANUFACTURING METHODS

Composite-can bodies are produced by two basic methods: spiral winding and convolute winding. Figure 2 shows a schematic drawing of the spiral process. Multiple webs including a liner, body plies, and label are treated with adhesive and wound continuously on a reciprocating mandrel. The resulting tube is trimmed and the can bodies are passed on to flanging and seaming stations. Figure 3 depicts the convolute process, wherein a pattern is coated with adhesive and entered onto a turning mandrel in a discontinuous process. Trimming and finishing operations for the convolute and spiral systems are virtually the same. Most composite-can manufacturers favor the spiral process in situations where long production runs and few line changeovers are involved.

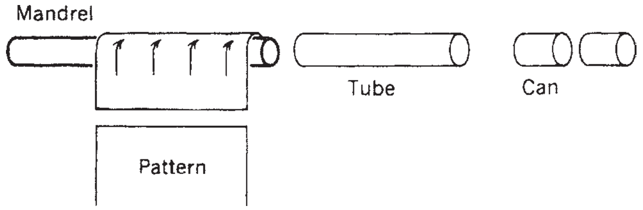

Figure 3. Convolute composite-can fabrication.

BODY CONSTRUCTION

Paperboard

The primary strength of the composite can is derived from its body construction, which is usually paperboard (see Paperboard). Body strength in composite cans is an attribute that has improved over the years and can be varied to meet many application demands.

In the early years of composite can development, it was common for can manufacturers to start with a readily available body stock such as kraft linerboard or tube-grade chip. These boards are adequate for most applications, but new boards with special qualities have also been developed for more demanding end-use requirements.

Research and development efforts in the combination paperboard field encompass a number of areas of expertise. Examples are (a) engineering mechanics concepts used to develop structural criteria and to develop tests to ensure that the paperboards possess the necessary resistance to bending, buckling, and creep; (b) surface chemistry used to predict the resistance of the board to penetration of adhesives, coatings, and inks and, similarly, protection from environmental conditions such as rain, high humidity, and freezing temperatures; and (c) process engineering used to optimize paperboard manufacturing and converting and to assist in quality assurance programs (see Specifications and Quality Assurance).

The scientific and engineering efforts have, in many instances, supplemented the artisan-like judgment of yesterday's papermaker. However, in many cases the new technological approaches have been blended with the papermaker's art to achieve the best of both worlds. As a result, the following advances have taken place: super-high-strength board that can be converted into composite cans with reasonable wall thicknesses that can resist implosion when subjected to near-perfect vacuum; resin-treated paperboards that retain their structural integrity when thoroughly wet; chemically treated paper that resists penetration by water over long time intervals; and paperboards that can be distorted, rolled, and formed in high-speed converting equipment without "creeping" back to their original shape.

Adhesives

The adhesives (see Adhesives) and coatings used in the manufacture of composite cans have also been improved to provide better heat and water resistance plus increased

Table 1. Adhesives Used in Composite-Can Manufacture

Adhesives	Properties
Poly(vinyl alcohol–acetate) blends	Good initial tack, good runnability, moderate to good water resistance
Dextrin	Fast tack, poor water resistance
Animal glue	Good tack, vulnerable to insect attack
Polyethylene	Requires heat, good dry bond, moderate water resistance
Hot melts	Require heat, difficult to handle, good water resistance, good water bond

Table 2. Physical Characteristics of Commonly Used Liner Films

	Polypropylene					
Physical Characteristics	Oriented	Oriented PVDC Coat	Nonoriented	Polyester	LDPE	Ionomer
Properties						
Tear strength, gf (N)	3–10[a] (0.03–0.10)	3–10 (0.03–0.10)	50–MD[a] (0.5) 300–XD[a] (3)	12–27[a] (0.12–0.27)	50–150[a] (0.5–1.5)	50–150[a] (0.5–1.5)
Burst strength, psi (kPa)				55–80 (379–551)	10–12 (69–83)	10–12 (69–83)
WVTR, g mil/(100 in.^{2} 24 h) [g mm/(m^2 d)]	0.75 [29.5]	0.3–0.5 [11.8–19.7]	1.5 [59]	1.5 (59)	2.0–3.0 (78.7–118.1)	2.0–3.0 (78.7–118.1)
O_2 rate, cm^3 mil/(100 in.^{2} 24 h) [cm m/m^2 d)]	160 [630]	1–3 [3.9–11.8]	160 [630]	3.0–4.0 (11.8–15.7)	500 (1970)	250–300 (985–1180)
elongation, %	35–475	35–475	550–1000	60–165	100–700	400–800
Product Resistance[b,c]						
Strong acids	G	G	G	G	G	G
Strong alkalines	G	G	G	G	G	G
Grease and oil	G	G	G	G	G	E

Source: Sonoco Products Company, Hartsville, SC.

[a] gf/mil (0.386 N/mm) thickness.

[b] G = good.

[c] E = excellent.

operating efficiency. Most product applications require precision gluing equipment to control the amount and position of the adhesive on each web. The most commonly used adhesives in today's composite can production are listed in Table 1.

Liners

Like all successful packages, the composite can must contain and protect the products. For that reason, continuous improvement is sought in liner materials. By combining materials such as LDPE (see Polyethylene, Low-Density), HDPE (see Film, High-Density Polyethylene; Polyethylene, High-Density), PP (see Film, Nonoriented Polypropylene; Film, Oriented Polypropylene; Polypropylene), ionomer (see Ionomers), PVDC (see Vinylidene Chloride Copolymers), metalized PET, and PE (see Film, oriented Polyester; Polyesters, Thermoplastic) with aluminum foil (see Foil, Aluminum) or kraft (Paper; Paperboard), the barrier properties of composites can be matched with a broad range of product requirements (see Laminating, Multilayer Flexible Packaging). The polymers may be included as film or coatings, or both. Tables 2, 3 illustrate the physical properties of some of the more common liner films and complete liner constructions.

The laminates shown in Table 3 vary significantly in cost. Depending on can size, the difference in cost per thousand units can be substantial. The foil-based laminates, which provide virtually 100% water and gas barrier, are becoming quite expensive. If less than total impermeability is acceptable, it pays to investigate coated- or plain-film alternatives. For example, packers of frozen juice concentrates have gradually moved away from foil liners to laminations of PE or ionomer/PE and kraft.

Table 3. Physical Characteristics of Composite Can Liners

	WVTR[b] at 100°F (37.8 °C) and 90% rh		
Composite[a]	Flat	Creased	O_2 Permeability[c], cm^3/(m$^2\cdot$d)
100 ga PP/adh/100 ga AF/LDPE/25# MGNN kraft	<0.001	<0.001	<0.001
100 ga PP/adh/35 ga AF/LDPE/25# MGNN kraft	0.06		<0.02
12# ionomer/35 ga AF/LDPE/30# XKL kraft	0.01		<0.02
1# PET slipcoat/35 ga AF/casein/25# MGNN kraft	0.09	0.93	<0.001
1# PET slipcoat/35 ga AF/LDPE/25# MGNN kraft	0.06	0.09	<0.001
12# HDPE/20# MGNN kraft	15.35		153
14.4# HDPE/20# MGNN kraft	12.09		126

[a] key: # = lb/ream = 454 g/ream. 100 ga = 0.001 in. = mil = 25.4 μm. MGNN = Machine-grade natural Northern. XKL = extensible kraft linerboard.

[b] ASTM Test Method E 96-80.

[c] ASTM Test Method D 3985.

End Closures

In addition to strength and versatility, the composite canister is also known for its numerous opening and closing systems. Consumers prefer easy-opening and dispensing features that provide resealability to maximize freshness. Paper, aluminum, steel, or plastic membrane closures are fitted on cans by single or double seaming, gluing, pressure inserting, or heat sealing.

A critical process in the manufacture of a composite can is double seaming the metal end (see Can Seamers). Since a composite can body is typically thicker than a metal can for any given package size, metal-can specifications for finished seam dimensions cannot be followed. Figure 4 shows composite double-seam profiles that are correctly and incorrectly made. Careful attention should be given to compound placement, selection of first- and second-stage seamer rolls, seamer setup, chuck fit, and base plate pressure if a satisfactory double seam is to be achieved.

Closures depend on the product to be packaged as well as the ease of use, protection needed, dispensing requirements, the opening and reopening ability, and necessary hermetic properties (1). Bottom end clsoures are primarily coated with steel although plastic, paper, and aluminum are sometimes used. The strength of the steel end is generally correlated with basis weight and temper. Coatings may also be applied to the end clsoure. Examples of coatings include tinplate, vinyl, epoxy, or phenolics. If maximum protection is needed, a sealing compound is applied to the end.

A variety of steel and aluminum ends with solid panel, removable tape, or other easy-opening features are available, as well as plastic-end closures with easy-opening and sifter tops. In composites, the most expensive components are usually the metal ends. With this in mind, gastight, puncture-resistant membrane closures for composite have been test marketed and evaluated by several companies (see Figure 5). They are considerably less expensive than aluminum full-panel removable ends, and they eliminate the cut-finger hazard posed by both the center panel and score residual on rigid ends. In addition, the membrane end eliminates the metal fines that can be produced by can openers.

Labels

The outer label on a composite can supplies additional package protection and, more importantly, enhances the can's aesthetic appeal and provides required consumer educational–instructional information. Composite labels include coated papers, foil/kraft laminates, and film constructions based on polyethylene or polypropylene. Flexographic, rotogravure, or offset printing (see Printing) are used, depending on cost and quality requirements.

Nitrogen Flushing

The materials and methods of constructing a composite can depend on its end use and desired performance characteristics. When composite cans were being developed for the snack industry, the concept involved creating a hermetically sealed containers that could replace the vacuum-packed steel can. Nitrogen flushing was developed to accomplish the removeal of oxygen from the container. It is based on the principle of flooding the container with a nonreactive gas just before it is filled. Powders have a tendency to stick together so several stages of purge are necessary. First the container is purged prior to filling, to purge the product in the filler, and finally to purge after filling. prior to seaming. For

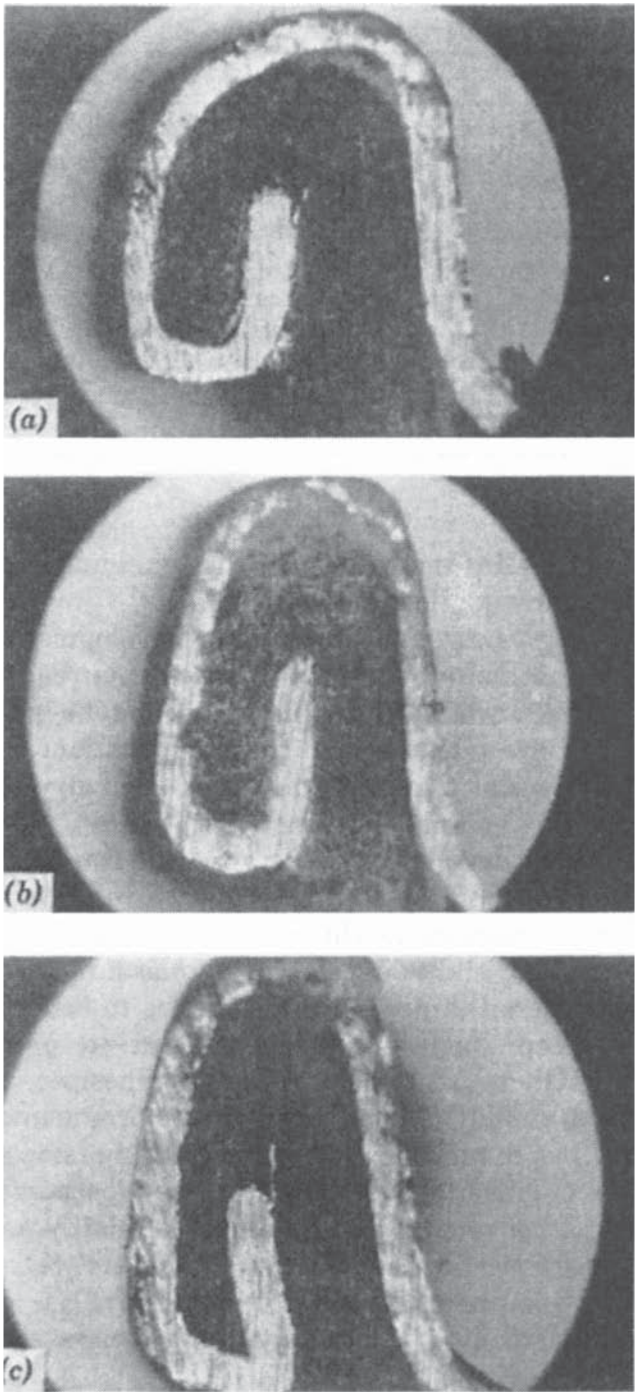

Figure 4. Composite-can double seams. (**a**) Loose, (**b**) correct, and (**c**) tight.

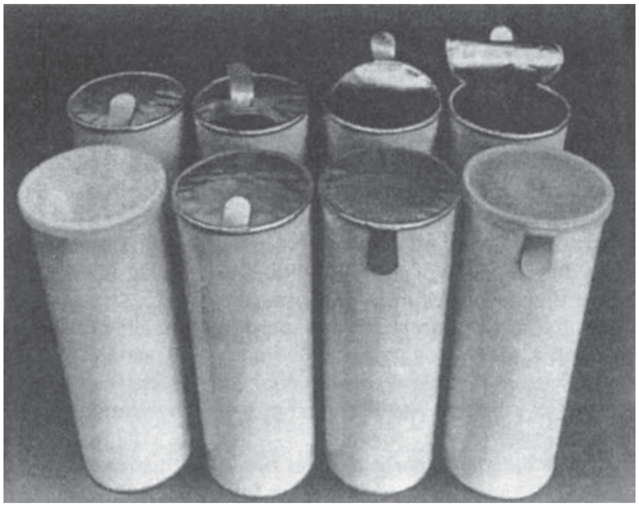

Figure 5. Composite with peelable membrane closure.

snacks, it may be necessary only to flush the filled can prior to seaming (1).

RECYCLING

The package's body plies are made from recovered and recycled fiber and can have a post-consumer waste ccntent of over 50%. In many communities, this qualifies the composite can for placement in the material flow stream of curbside recycling programs. In addition to the body, the metal lids are recyclable. An introduction of a paper bottom end can increase the amount of recycled post consumer content up to 70% and enhances the can's ability to be recycled (1).

NEW DEVELOPMENTS

While dry-food packaging is the most common application for today's composite cans, more and more retailers are seeing its value as a customizable option for vendable and nonfood products. Packaging engineers are focusing on ways to increase performance and convenience by enhancing existing features and materials, reducing costs, and redesigning of closure systems. Another way of using sorbents is being researched. Sorbents provide high moisture and odor absorbing capability. Generally, sorbents are included in the products as a nonedible packet consisiting of silica gel or clay. Research is focused on ways to build the sorbent into the liner structure. By continung to absorb oxygen, the product inside the can will remain fresher before and after opening (1).

Valved membrane ends are also being studied. These are designed for coffee. The one-way release valve allows for packing and sealing immediately after roasting. This eliminates the need for extended hold times for degassing and at the same time maximizes flavor and aroma. A vacuum is no longer necessary. Because the end is peelable, a can opener is not needed.

The resealable plastic overcap offers great promise for providing increased shelf life after opening. Redesign of the overcap will feature the addition of a gasket that will snap to the opening of the composite can.

BIBLIOGRAPHY

M. B. Eubanks, "Cans, Composite" in M. Bakker, ed., *The Wiley Encyclopedia of Packaging Technology*, 1st edition, John Wiley & Sons, New York, 1986, pp. 94–98: 2nd edition, A. J. Brody and K. S. Marsh, eds., 1997, pp. 134–137.

Cited Publication

1. C. Romaine, "Composite Cans" in M. J. Kirwan, ed., *Paper and Paperboard Packaging Technology,* Blackwell Publishers, London, 2005.

CANS, CORROSION

David Reznik
Raztek Corporation, Sunnyvale,
California

Corrosion in food cans, manifested in failure phenomena such as detinning, hydrogen swell, and enamel delamination, has troubled the food industry ever since canning was practiced. Much research work has been invested in this subject, but problems still exist with only little relief. The major reason for this fact is that the mechanisms involved in the corrosion phenomena are not well known. Molecular hydrogen is well known as a product of the corrosion process, but its origins and its role along the corrosion process in atomic form is not well established or even considered (1, 2).

The existing theory cannot explain various corrosion phenomena, and therefore it cannot provide solutions to corrosion problems. There are many indications that all corrosion phenomena involve hydrogen activity. The source of the hydrogen is from water HOH, in which the radicals H and OH are interdependent, similar to the ions H^+ and OH^-. All the four species are involved in the oxidation and reduction reactions in nature. The state-of-the-art corrosion theories consider mainly the activity of the ions H^+ and OH^-, but ignore the major role of the radicals H and OH. The glass electrode that measures the pH defining the H^+ and OH^- activity is very common, but the redox potential defining the ratio of H and H^+ activities is rarely measured and considered. The pH indicates the degree of acidity or alkalinity of the liquid. The redox indicates to what degree the liquid is oxidizing or reducing.

Both H and H^+, and perhaps OH and OH^-, have some qualitative dimension, as expressed, for example, by the NMR (nuclear magnetic resonance) of the hydrogen. This energetic property differentiates hydrogen atoms based on its source. Hydrogen atoms and ions from different sources may have a different effect on corrosion and many other phenomena. This may be why different acids have a different corrosive effect, and the pH alone is far from providing an explanation to corrosion failures.

The source of corrosion is water, which contains the four species participating in the corrosion process. These are H and OH radicals as well as the well-known H^+ and OH^- ions. Corrosive materials affect some qualitative dimension of the hydrogen atoms of the water. This is why extremely small quantities of some material added to the water may have a dramatic effect on corrosion, as well as on many biological reactions. A simple known example for such an additive is sulfur dioxide, which in trace concentration may lead to detinning of fruit cans in a matter of days or even hours. The effect of such traces on pH are negligible.

These observations led to the conclusion that water is not just a solvent or carrier. It is the corrosive agent itself but is affected, however, by materials dissolved in the water and even by materials that the water was in contact with.

The major tool used for corrosion studies in the food packaging industry is still the test pack, by which a product or medium is packed, stored, and evaluated. This method should have been used to verify a mechanism, rather than as the research tool. In fact, very little was learned from test packs to ameliorate the theories of corrosion mechanisms. In many cases the conclusions from test packs were inconclusive and misleading.

Many analytical methods in corrosion studies (3) are actually based on oxidation–reduction reactions where specific hydrogen is involved (4). Hydrogen in molecular form was detected on the external wall of cans during storage (1, 5), but its origin and permeability (6, 7), as well as its reactions in the bulk of the metal (8, 9) have not been considered in can corrosion studies.

Enamel adhesion is based on hydrogen bonds (10), and reactions affecting the hydrogen bonding (11) affect the performance and the shelf life of enameled cans.

The corrosion mechanism involves oxidation–reduction reactions (12). In the case of detinning in plain cans (13), where the food is in contact with the tin-coated steel, the tin and some iron are oxidized. This is the tangible bottom-line result, but it can be shown that the active element leading to this result is the atomic hydrogen from water. The oxidation of the food product in enameled cans, manifested in color and flavor changes, can be explained by hydrogen loss (12).

Oxidation of organic matter is caused by loss of hydrogen atoms. Organic matter that gains hydrogen atoms is reduced. Oxidation of metals is usually defined as loss of electrons. Metallic ions can gain electrons and deposit as metals. It can be shown that the hydrogen atom, in water or in the food compounds, is the element that is transferred or gives and takes electrons, and in its absence there will be no changes in organic and inorganic matter.

THE CORROSION MECHANISM

The basic reaction of oxidation reduction is

$$H \leftrightarrow H^+ + e^-$$

The reaction to the right expresses the oxidation of the hydrogen atom to H^+ (15). The reversible reaction to the left is the reduction of the hydrogen ion H^+ to H atom. The Nernst equation derived from this equation is

$$E = E^0 + \frac{RT}{F} \ln \frac{[H^+]}{[H]}$$

where E is the electrochemical potential of the hydrogen electrode, E^0 is the standard hydrogen potential, R and F are constants, and T is the temperature. The expression $[H^+]$ is the activity of H^+, and [H] is the activity of atomic hydrogen. The means to measure this potential is basically a platinum surface, to which the atomic hydrogen is absorbed, and a reference electrode, such as a calomel half-cell.

Replacing platinum with tin, the reading will be different, because of the very different activity of hydrogen on tin. In conclusion, the redox potential measurement indicates the potential of hydrogen on the electrode at the conditions of the measurement. The galvanic cell, therefore, expresses the difference of hydrogen activity on the two metals.

The reaction on the cathode in a galvanic cell is known to be $H^+ + e^- \rightarrow H$, but it is not common consideration that the opposite reaction takes place on the anode, where H from the solution, gives its electron to the anode and turns into H^+. The latter may take an electron from the metal and turn back into H, and the metal will dissolve as positively charged ions. If the anode cannot lose electrons, the solution will be oxidized, because it lost hydrogen that turned into H^+. The net result is hydrogen formation on the cathode and H^+ or metal ions formation at the anode. According to the above, the hydrogen in its different forms is the major player in transferring electrons, or in oxidation reduction reactions.

In a corrosion process in plain tinplate cans, the metal is usually oxidized, and the product is reduced. In the case where hydrogen is formed on the cathode and there is no metal dissolution from the anode, the product itself is oxidized, because it lost atomic hydrogen.

$$\begin{aligned} \text{On the cathode :} \quad & 2H^+ + 2e \rightarrow H_2 \\ \text{On the anode :} \quad & 2H \rightarrow 2H^+ + 2e \\ & Sn + 2H^+ \rightarrow Sn^{2+} + H_2 \end{aligned}$$

The oxidation, therefore, can affect the solution as well as the metal. Loss of H from water creates excess OH radicals that may oxidize the product. Pears packed in plain cans will be slightly bleached, and some tin will dissolve. The product is reduced, and the tin is oxidized. In enameled cans, pears will darken because there is no metal dissolution.

Water is the source of H, which is in equilibrium with H^+ and the respective counter groups OH and OH^-. H is therefore the major parameter in the corrosion mechanism. Any additive to water will somehow affect the activity of the above four species, thus indirectly contributing to the corrosion process, through the effect of the additives on the water.

Radical and Ionic Reactions

Electrons can also be given to the anode by negative ions, such as chloride and hydroxyl ions. The chloride at the anode gives an electron to the anode and turns into chlorine radical, which attacks the water and forms HCl and OH radicals. The OH radicals may attack the metal, take electrons, and turn into hydroxyl ions OH^-.

$$Cl^- \rightarrow Cl + e^-$$

$$Cl + HOH \rightarrow H^+Cl^- + OH$$

$$Me + OH \rightarrow Me^+OH^-$$

or

$$H + OH \rightarrow HOH$$

The reaction of chlorine with water is not an ionic reaction; it is a radical reaction, similar to the attack of OH on the metal. Indeed, dry chlorine can attack metals directly in absence of water, but such reactions are out of the scope of the common corrosion in food cans.

The common approach in corrosion research is that the mechanism is ionic only and that the water is just the solvent and the carrier. This approach is incorrect and misleading. In fact, corrosion of metals in distilled water may be more severe than in tap water. The biochemical and pharmaceutical industries realize severe corrosion of stainless steel piping in distilled water.

The Electrochemical Potential

The galvanic corrosion has been explained on the basis of potential difference between two dissimilar metals. This is the driving force of the electrical current and therefore of the corrosion process. The electrochemical potential of a metal has been defined in textbooks as the tendency of the metal to dissolve, or to give electrons. Actually, the potential is not of the metal, but of the hydrogen on the metal. The potential difference of the galvanic cell or the bi-metal is therefore the difference of the hydrogen potential on the two metals. The potential of hydrogen depends on the solid to which it is adsorbed and the solution in which the solid is immersed. Also, the pressure above the solution has an effect on the potential (15). This is another indication that the potential of a metal has to do with hydrogen activity. The reactivity of the hydrogen with the metal will determine the type and extent of the corrosion. If the two metals are noble, the solution will be oxidized near the anode, where hydrogen gives its electron.

Potential difference does not require two different metals. Nonuniform mechanical and chemical composition leads to nonuniform absorption of hydrogen atoms to the metal and thus to potential differences. The potential of hydrogen on a stressed site on the metal is different than on a nonstressed area. The stressed metal site will usually serve as the anode, by accumulating hydrogen atoms that turn into ions by donating their electrons to the cathodic sites. The next step, as explained above, is the loss of electrons from the metal to the hydrogen ions. As a result, the metal dissolves as ions and the hydrogen atoms are reformed. Trapped hydrogen atoms in the bulk of the metal may lead to corrosion at the traps. It is well known that stresses in steel lead to trapping of hydrogen and that stressed areas tend to corrode. The type and rate of the corrosion will also depend on the metal composition and the distribution of the impurities on the surface and in the bulk of the metal.

A good indication that the electrochemical potential of metals is actually the potential of hydrogen on the metal is that an enameled metal surface has a potential very close in value to that of the uncoated metal. Coated tinplate has a different potential than coated TFS (tin-free steel). This means that hydrogen and protons, which can migrate through organic coatings, may reach the metal, where also electrons may flow. The fact that metal does not dissolve into the food does not mean that oxidation reduction reactions do not occur. A possible result of such potential difference is hydrogen swell and food discoloration.

Polarization

The activity of the hydrogen species in the solution is changing in the course of the corrosion process. Near the anode there is a depletion of H atoms, and near the cathode there is a depletion of H^+ and formation of H atoms. This leads to a decrease of the anode potential and increase of the cathode potential, which means a decrease in the potential difference and the driving force for electrons flow. This phenomenon is termed *polarization*. Oxidizing materials, which tend to combine with hydrogen atoms, will counteract polarization on the cathode. Reducing materials, which provide H atoms, will counteract the anodic polarization. Materials that counteract polarization are called *depolarizers*.

The Role of Oxygen

The term *oxidation* is perhaps the most misleading term in science. It has misled everyone, including scientists to relate oxidation to oxygen. While the combination of matter with oxygen is an oxidation process, most oxidation processes do not involve molecular oxygen. Oxygen is perhaps the mildest oxidizer in nature; however, its combination with hydrogen is forming the OH radical, which is the oxidizer in nature.

It can be shown that rust formation requires water or moisture and not oxygen, as it is commonly thought. Steel will rust under vacuum and high moisture, but it will not rust in dry air. Oxygen can enhance rust formation, by combining with hydrogen atoms adsorbed to the metal surface, and form OH radicals. Hot steel surface, charged with hydrogen under vacuum, will immediately form a layer of rust on exposure to air.

Oxygen is a mild cathode depolarizer, but in the presence of atomic hydrogen and a suitable catalyst, oxygen can form OH radicals that are strong oxidizers, because these tend to combine with hydrogen atoms to form water. Four hydrogen atoms are oxidized to water by one molecule of oxygen. Such activity, however, depends on the ability of the metal to catalyze the combination of molecular oxygen with atomic hydrogen. A good illustration of the mild oxidizing nature of oxygen can be demonstrated by the fact that bubbling air into orange juice for a few hours does not lead to discoloration. On the other hand, orange juice discolors in enameled cans sealed under vacuum. A food product that has lost hydrogen is oxidized. The hydrogen can be lost to solids, such as coated tinplate, that absorb hydrogen atoms. The oxygen may combine with these absorbed hydrogen atoms to form OH radicals that will directly oxidize the product. Oxidation of metals is defined as loss of electrons. It is quite well established that the electrons are lost in the corrosion process to H^+ or to OH radicals, rather than oxygen.

On the basis of these observations, the oxygen is a secondary player, which enters into the game at a later phase in the corrosion mechanism, when the depolarization is the governing mechanism. The combination of molecular oxygen and hydrogen requires a suitable catalyst. Steel seems to be a good catalyst for such a reaction, but it also is a strong absorber of hydrogen atoms.

Hydrogen Activity in Metals

Hydrogen embrittlement and stress corrosion are formed by absorption of hydrogen into the metal. Hydrogen trapped in steel can form extremely high pressures in the metal, leading to cracking, blistering, and pitting. The hydrogen trapped in the steel can react with many of the noniron elements, such as carbon, sulfur, and phosphor. The result is pitting corrosion, decarbonization, and loss of strength.

Redox Potential of Water and Aqueous Solutions

The quality parameters of water in contact with the metal should include its redox potential that takes into consideration not only the pH, but also the hydrogen activity. Water is composed from H and OH radicals. The multiplication of the activities of the H and OH radicals is constant, similar to the relationship of H^+ and OH^- from which the pH values are derived. When the H activity is higher than the OH activity, the water is reducing, and when the activity of OH is higher, the water is oxidizing. In neutral water the activity of the H and the OH is the same. Neutral water with respect of redox is not the same as neutral water at pH 7, and vice versa. Water at pH 7 can be very oxidizing and can be made very reducing by bubbling hydrogen in the water. Orange juice, for example, is acidic and reducing. Tap water may be at pH 7 and very oxidizing. The redox potential, as defined by the Nernst equation given above, includes the effect of the pH, but the pH does not include the redox. Many materials added to the water may affect the redox but not the pH. A good example is the addition of ozone and hydrogen peroxide to water, which will affect the redox but not the pH. The corrosivity of the water may sharply change by such additives. It is very important to consider the redox potential as well as the pH of the water used for the product and the process, in order to minimize internal corrosion, and that of the cooling water to avoid external corrosion.

THE SPECIFICITY OF HYDROGEN

The empirical corrosion research clearly indicates that the pH alone can neither explain nor predict corrosion phenomena. The corrosivity of various food products having the same pH may be very different. Acetic acid, for example, is much more corrosive than citric acid in contact with steel, but the opposite is true for tin that is not attacked by acetic acid. In lack of a scientific explanation to these facts, this phenomenon is explained by the term “affinity.” Even the consideration of the redox potential does not enable prediction of corrosion. Two solutions at the same pH and the same redox may exhibit different corrosion effects on the same type of can.

Haggman (2) showed that steel with high sulfur content is attacked by foods containing sulfates. Similarly, foods containing phosphates are corrosive to steel containing high phosphor levels. All of these confusing facts, which cannot be explained by the common theories of corrosion mechanisms, are indicative that some parameter, having a major effect on corrosion, is not known and therefore not considered.

Researching the mechanism of biological oxidation reduction provides a clue that might point out a possible direction for explaining the puzzling phenomena described above.

The specificity of enzymes is well known. Enzymes are responsible for the oxidation reduction reactions in biological systems. Each biological reaction requires a specific enzyme. The catalyst for the reduction of carbon dioxide into sugar in the photosynthesis reaction is the chlorophyll. No other catalyst in nature will do it. This reaction also requires very specific light energy, at a very specific narrow range of wavelength or frequency. The physicist relates to energy also through its qualitative properties, while others usually consider energy quantitatively only. Energy has a dimension of intensity, but also a qualitative dimension expressed in wavelength or frequency.

Antioxidants donate hydrogen atoms, thereby serving as reducers. However, such reducing activity is quite specific. Vitamins C and E are antioxidants, but each one is responsible for the reduction of specific systems. This means that the hydrogen donated by vitamin E is qualitatively different from that of vitamin C, or other antioxidants. In other words, if antioxidants had not have this specificity, there would have been only one antioxidant in nature.

The summary of all these facts leads to the conclusion that hydrogen atoms and ions differ in their qualitative energetic properties. This is the source of the multiple forms of corrosion, and this must be the explanation for the lack of understanding and control of some corrosion phenomena.

Nuclear magnetic resonance (NMR) spectroscopy is based on the theory that the active hydrogen atom in an organic molecule has a specific energetic property. This property is specific to every material and therefore can be used for the purpose of identification of materials. This knowledge is applied in medicine to identify, for example, cancerous cells in biological tissues. Applying NMR spectroscopy to corrosion research may lead to explanations as to why atomic and ionic hydrogen from different sources have a different corrosion effect on a certain metal.

COMMON CORROSION PROBLEMS

The mechanisms explained above can be used to enlighten some of the common corrosion failures.

Pitting Corrosion

Microscopic examination of the metal in cans exhibiting "hydrogen swell" and sulfide black reveals pits in the steel. This type of corrosion is common in cans with foods containing sulfur. It has been realized that the pits occur more on stressed areas, in steels containing sulfur.

Hydrogen atoms that had been in contact with a sulfur-bearing compound permeate into steels and are trapped at preferred specific points. Such points contain extra amounts of sulfur, which is irregularly distributed in the steel. The permeation and trapping of hydrogen in such sites is enhanced, if the sites are mechanically stressed. The hydrogen trapped in the steel develops very high local pressures in the steel. The trapped hydrogen reacts with the nonmetallic components of the steel, and it also recombines to form molecular hydrogen gas. Such activity in the steel occurs mainly in enameled cans. This process requires permeation of hydrogen into the steel, and it is therefore more common in enameled tin-free steel and low-tin-coated tinplate. The permeating hydrogen may leave to the atmosphere, unless trapped by nonuniform distribution of impurities and mechanical stresses.

Sulfide Black

The trapping of hydrogen in the steel depends on the steel and the food composition. The gas emanating from the pits may be only hydrogen, but usually, in case of pit formation, it is composed of a mixture of compounds containing iron, sulfur, and other elements from the steel. These erupting compounds appear as black spongy lumps, termed by canners as "sulfide black." This phenomenon occurs mainly in enameled cans, and the sulfide black appears mainly on the coated side seam and along beads and scratches, where irregular stresses are formed. The food product triggers the formation of the sulfide black, but the steel composition and mechanical stresses are the controlling factors in the mechanism of sulfide-black formation.

Enamel Peeling and Under Film Corrosion

The bonding between the enamel and the metal is based on hydrogen bonds. These bonds are formed by hydrogen atoms shared by the metal and the coating. The H atom, coming usually from the organic coating, shares its electron with the metal and the coating. For example, the hydrogen atom of an OH group in the coating may share its electron with an oxygen atom on the metal surface. The hydrogen bond can be described as

$$\text{Metal}-\text{O}\cdots\text{H}\cdots\text{O}-\text{polymer}$$

Such bonds can be destroyed by addition of a hydrogen atom to the bond. By that, two OH groups that repel each other will be formed, and the metal will repel the polymer. This means that the delamination is caused by a reduction mechanism. A complete delamination, with or without any corrosive attack on the metal, can occur when the food product is very reducing, the polymer is very permeable to hydrogen atoms, and the metal surface is extremely impermeable to the hydrogen. This excess of atomic hydrogen will be formed between the tin and the polymer, leading to reduction of the metal and the loss of the hydrogen bond. Such complete delamination was frequent when heavy hot-dipped tin coatings were coated with phenolic and other types of polymer. Partial delamination, followed by corrosion under the enamel in tomato cans, is still a common phenomenon. It appears usually near scratches and on stressed areas, such as beads and side seams.

The hydrogen bond can also be destroyed by oxidation—that is, by removing the hydrogen atom that is forming the bond. Pulling the hydrogen out chemically or electrochemically may lead to loss of the bonding hydrogen from the polymer. The loss of adhesion in such cases is expressed in small blisters to the enamel, pit formation, and some metal dissolution, and it is frequently indicated by formation of hydrogen gas in the container. The latter leads to vacuum loss and even hydrogen swell.

Hydrogen Swell

The formation of hydrogen gas and severe tin dissolution in plain cans is well known. This is usually explained as the attack of H^+ on the tin. The mechanism is much more complicated, and it involves the redox potential of the food and the specificity of the hydrogen in relationship to the tin and steel composition. The pH alone is far from explaining why a few parts per million (ppm) of sulfite, which have no significant effect on the pH, will lead to very rapid detinning. The tin is attacked by H^+, which, as mentioned above, has also a qualitative dimension besides its concentration in the food. The H^+ could also be formed from atomic hydrogen that entered the bulk of the tin. The fact that large quantities of hydrogen gas are formed may indicate that the atomic hydrogen in the tin delivers the electrons to cathodic sites in the steel. Analysis of cases of such failure supports the conclusion that the interaction of the tin with specific hydrogen is the controlling factor in rapid detinning. The redox potential of the product and the specificity of the hydrogen of the product, as well as depolarization agents in the product, are the important parameters to be considered in such failure studies.

Hydrogen swell occurs also in enameled cans. The mechanism is commonly attributed to the porosity of the enamel. The enamel coverage and its thickness affect the resistance to hydrogen permeation into and out of the enamel. The resistance is only one of the factors affecting hydrogen permeability. At zero driving force, the resistance is meaningless. The formation of the hydrogen pressure and its permeability depend mostly on the characteristics of the metal and the food product. There is a certain optimal enamel coating that should be applied.

This optimum depends on a few factors related mainly to the metal and the product but not related to the enamel. Hydrogen atoms can diffuse through the enamel and dissolve and accumulate in the metal, but they can also migrate to the external wall. They can then react with the impurities in the steel, form pits, recombine to form molecular hydrogen, and diffuse through the enamel. It is possible to have hydrogen swell without significant or equivalent metal dissolution.

Darkening of Light-Colored Fruit

Corrosion in cans refers to the oxidation of the metal. The role of hydrogen in its atomic and ionic form in this corrosion process was explained above. Oxidation of the food product may be regarded as the corrosion of the product, and it is explained as loss of atomic hydrogen. In many cases the hydrogen that was lost from the food is the hydrogen that has led to the corrosion. In other words, the metal can, enameled or plain, can lead to oxidation of the food product by absorbing atomic hydrogen from the product.

Darkening of the food is the result of oxidation of some compounds in the food. The oxidation is due not to addition of oxygen, but rather to hydrogen loss. The composition and the physiochemical properties of the food, the organic coating, and the metal, with respect to hydrogen activity, are the factors involved in the mechanism of the oxidation of both the metal and the food.

CONCLUSION

Hydrogen in its atomic, ionic, and molecular form participates in any corrosion process. There is no corrosion without hydrogen. The electrochemical potential of the metal is the potential of hydrogen. The redox potential of the food defines the hydrogen activity of the food and its tendency to lose or gain hydrogen atoms.

The specific energetic properties of the active hydrogen will determine the rate of corrosion. The hydrogen activity and its effects have to do with the composition of the materials involved. The interaction of the materials with hydrogen determines the type and rate of corrosion. The properties of materials, such as hydrogen permeability through the polymers and the metals, should be studied and correlated with performance.

The source of hydrogen is water that acts through its H and OH radicals. The redox potential of water, together with the pH and the specificity of the hydrogen, have to be considered in order to understand and control corrosion. The water used for processing and the product water should be considered along the above parameters.

The food product composition and any additive will have an effect on the corrosivity of the product. The packaging materials should be studied in view of their interactions with hydrogen, taking into account the specific properties of the hydrogen atoms in the product and the affinity of the specific hydrogen with the specific packaging materials.

This article is a summary of the author's research through a new approach to corrosion studies. The research is based on the well-verified assumption that hydrogen activity is the major parameter controlling corrosion. The research is far from being complete and may not offer immediate solutions to all corrosion phenomena and failures. It may serve as a new direction for researchers in this field who seek better understanding of the corrosion mechanisms and means to avoid failures.

Corrosion failure analysis through the presented theory can spread light on many unexplained corrosion phenomena, such as detinning, enamel peeling, and underfilm corrosion, as well as sulfide black and pitting corrosion. The key to understanding and solving corrosion problems is *thinking hydrogen*.

BIBLIOGRAPHY

1. J. Haggman and Oy G. W. Sohlberg, in *Proceedings, 2nd International Tinplate Conference*, International Tin Research Institute, London, 1980, pp. 400–405.
2. J. Haggman and Oy G. W. Sohlberg, in *Proceedings, 4th International Tinplate Conference*, 1988, pp. 294–304.
3. S. C. Britton, *Tin versus Corrosion*, ITRI Publication 510, 1975.
4. D. Reznik, "Porosity of Coatings," *The Canmaker* **February**, (1990).
5. G. Serra and G. A. Perfetti, *Food Technol*. **March**, 57–61 (1963).
6. N. V. Parthasaradhy, *Plating* **January**, 57–61 (1974).
7. D. Reznik, *Proceedings, 4th International Tinplate Conference*, 1988, pp. 286–294.
8. I. M. Bernstein and A. W. Thompson, *Hydrogen Effects in Metals*, 1981.
9. T. Zakroczymski, *Hydrogen Degradation of Ferrous Alloys*, Noyes, NJ, pp. 215–250.
10. G. Pimental and A. L. McClellan, *The Hydrogen Bond*, 1960.
11. W. C. Hamilton and J. A. Ibers, *Hydrogen Bonding in Solids*, 1968.
12. D. Reznik, "Oxidation of Foods in Enameled Cans," *The Canmaker* **March**, 32–33 (1993).
13. D. Reznik, "Corrosion of Tinplate," *The Canmaker* **July**, (1991).
14. D. Reznik, "Recent Research on Side Seam Striping," *The Canmaker* **September**, 47–48 (1990).
15. A. White, P. Handler, et al., *Principles of Biochemistry*, McGraw-Hill, New York, 1959, pp. 35–37.

CANS, PLASTIC

Updated by Staff

INTRODUCTION

Cans are defined here as open-mouthed cylindrical containers, usually made of aluminum (see Cans, aluminum) or tinplated steel (see Cans, steel). This form can also be made of plastics, by injection molding (see Injection molding), blow molding (see Blow Molding), or forming from sheet (see Thermoforming). Such cans have been made for many years and have taken small shares of some markets, but are not dominant in any. Plastics are much less rigid than metals, thicker walls are needed for equivalent performance, and container weight and cost can become excessive. For carbonated beverages (see Carbonated beverage packaging), cans are rigidified by internal pressure, but other properties such as burst strength, creep, and gas barrier become more critical.

Tensile strength is needed, especially in beverage cans, and can be achieved through selection of appropriate plastics plus orientation (stretching). Orientation in the circumferential (hoop) direction is hardest to do, and this explains why blow molding from a narrow parison may give better performance than thermoforming or direct injection to size. Heat resistance may be needed: either around 122°F (50 °C) to resist extreme warehousing conditions; or 140°F (60 °C) for 30 min (pasteurization); or 185–212°F (85–100 °C) for a few seconds (hot filling); or 257°F (125 °C) for 20–40 min (retort sterilization cycle). A can for processed foods must withstand the internal pressure generated when a closed can is heated. In a sterilizing retort, compensating overpressure may be needed outside the can to prevent failure. Not all retorts are capable of such overpressure (see Canning, food). Gas and/or moisture barrier and chemical resistance are needed for most packages. The can shape is advantageous for barrier, because it offers a low surface-to-content ratio, but it also introduces the possibility of failure from chemical attack in some places, particularly the stressed flange area and the bottom edge.

Product-design centers on these two features: the flange and the base. A precise flange is needed to guarantee a perfect seal, which is absolutely critical for sterilized cans and is certainly desirable for contained liquids, especially under pressure. If a plastic end is used, heat-sealing is possible, but the plastic end will be less rigid and may require a heavier flange. Common metal ends may be used, but flanges must be very flat. Also, no matter what end is used, stresses and later stress cracking in that region must be anticipated and avoided.

Vertical sidewalls are desired for easy transport in filling lines. Tapered walls do allow nesting, which has storage advantages, but for mass applications the filling speed is more important. Another design concern is the necked-in end now customary for beverage cans, which allows tighter six-packing and cheaper ends. This can be done with plastics, but mold design is more complicated to permit the undercut needed.

APPLICATIONS

Thermofolded 250-mL PET cans have been used in Great Britain (Plastona), but they are nonvertical (they nest), and they are not coated to enhance barrier properties. In the United States, Coca-Cola was working with "Petainers," which are cans drawn in solid phase from molded PET cups developed in Europe by Metal Box and PLM A.B. The term Petainers now refers to bottles. In Italy, some beverage cans are made by thermoforming, whereas some are made by blowing bottles and cutting/flanging the tops. The latter should give the best properties for given weight because of more orientation.

For heat-processed foods, polypropylene is the preferred material because it has the highest heat resistance of the commodity thermoplastics. Polycarbonate (see Polycarbonate) and other engineering plastics have been suggested, but are much more costly. Both PP and PC are poor oxygen barriers, however, and would need a barrier layer for many foods. Metal Box also worked with extruded tubes with top and bottom flanged ends, and resin suppliers have made cans on pilot lines, but there is still no large-scale commercial use. One of the problems is that other forms of plastic (e.g., trays, bottles, pouches and bowl shapes) are competing for the same markets. For frozen juice, composite cans have most of the market (see Cans, composite), although Tropicana has injection molds its own polystyrene cans, and some injection-molded HDPE cans appeared in the market as well. Injection-molded HDPE cans are used for cake frostings, and dry beverages are sometimes seen in plastic cans, notably the heavy injected PP cans used in Italy for coffee.

The Plastic Can Company (PCC) has patented a two-stage PET paint container. The technology that has been used for bottles is now available for cans. The technology allows preforms and lids to be manufactured centrally and economically shipped and stored at the paint filling plant before being blow molded into finished cans on site. The plastic can replaces the traditional metal lever lid containers used for paints and dry goods with a single plastic molding. Its benefits include: use of environmentally friendly plastics such as PET to be used for the first time for oil and solvent-based paints and for water-based paint; transparent cans allowing consumer to see color of paint; air tight on resealing; rustproof. Also, PET is cheaper and lighter than steel. PCC is now developing cans intended for kitchen/home use with hand-openable and resealable air-tight lids for dried and preserved foods (1).

BIBLIOGRAPHY

"Cans, Plastics" in *The Wiley Encyclopedia of Packaging,* 2nd edition, John Wiley & Sons, New York, 1997, p. 144.

Cited Publication

1. "The First Ever Two-Stage Plastic Paint Can," The Plastic Can Company, www.plastic-can.com. Accessed July 2008.

CANS, STEEL

Fred J. Kraus
George J. Tarulis
Crown Cork & Seal Company, Inc., Alsep, Illinois

In 1975, France not only was involved in a revolution but also was at war with several hostile European nations.

The French people as well as the armed forces were suffering from hunger and dietary diseases. Consequently, a prize of 12,000 francs was offered by the government to any person who developed a new means for the successful preservation of foods. Napoleon awarded this prize to Nicholas Appert in 1809. Mr. Appert's discovery was particularly noteworthy because the true cause of food spoilage was not discovered until some 50 years later by Louis Pasteur. Appert had nevertheless recognized the need for utter cleanliness and sanitation in his operations. He also knew or learned the part that heat played in preserving the food, and finally, he understood the need for sealed containers to prevent the food from spoiling. The containers he used were wide-mouthed glass bottles that were carefully cooked in boiling water (1, 2).

A year after the recognition of Appert's "canning process," in 1810, Peter Durand, an Englishman, conceived and patented the idea of using "vessels of glass, pottery, tin (tinplate), or other metals as fit materials." Thus, the forerunners of modern food packages were created. The original steel cans had a hole in the top end through which the food was packed. A disk was then soldered on to the top end. The disk had a small hole in it to act as a vent while the can was cooked. The vent hole was soldered and closed immediately after cooking (2).

Durand's tinplate containers were put together and sealed by soldering all the seams. The techniques were crude but nevertheless, with good workmanship, afforded a hermetic seal. A *hermetically sealed container* is defined as a container that is designed to be secure against the entry of micro-organisms and to maintain the commercial sterility of its contents after processing. Commercial sterility is the inactivation of all pathogenic organisms and those spoilage organisms that grow in normal ambient distribution and home-storage temperatures. No technological advance has exerted greater influence on the food habits of the civilized world than the development of heat treatment and the use of hermetically sealed containers for the preservation of foods (1, 3).

Foods canned commercially by modern methods retain nearly all the nutrients characteristic of the original raw foods. Several investigations showed that good canning practices as well as proper storage and consumer preparation improve the retention of the nutritive value of canned foods (4–6).

The steel container provided a reliable lightweight package that could sustain the levels of abuse that were common in packing, distributing, and selling of products. It has also been necessary to improve and develop new concepts to keep up with the advances in packing procedures, materials handling, and economic pressures.

EVOLUTION OF THE CAN

A four-track evolutionary road developed. One uses solder to seal all the can seams. This process evolved from the hole-in cap container to one that holds evaporated or condensed milk. These "snap-end cans" retain the vent hole in the top that permits filling the can with a liquid. They are then sealed with a drop of solder or solder tipping. The second track combines the soldering of the side seam with the mechanical roll crimping the ends onto the body. The attachment procedure known as *double seaming* was patented in 1904 by the Sanitary Can Company. This invention significantly improved opportunities to increase the speeds of can manufacture and packing operations. Today, double seamers or closing machines seal cans in excess of 2000 cans per minute with filling equipment that can match this task. The third track uses a press operation that stamps out cuplike structures with an integrated body and bottom, with the lid or top attached by double seaming. These began as shallow containers like sardine cans. These drawn or two-piece cans evolved into taller cylindrical cans that are popular for many food products and carbonated beverages. The primitive shallow cans are fabricated on simple presses. The taller two-piece cans go through multiple press operations like the draw–redraw technique or through a drawn press and wall iron operation. The fourth track is the incorporation of a welded side seam for three-piece cans, which provided greater body strength and more double seaming latitude in comparison to the soldered side seam.

The growth of the steel can caused the manufacturing function to change. At first, the packers manufactured their own cans. This was understandable, because the same craftspersons and equipment were necessary to seal the can as well as to make them. When the double-seamed can or "sanitary can" was accepted, the can manufacturing function coalesced into large manufacturing organizations. This came about because the double-seamed can lent itself to mechanized production whereas the all-soldered can remained a manual operation. Hence, it was economically attractive to invest large sums of money for improving the sanitary can. A few large packers could afford to be self-manufacturers, and they invested large sums to keep up with the developing technology. However, their attempts to produce cans was often short lived because of economic changes that forced them to become dependent on the can companies for their container needs.

Today some packaging companies still make their own containers.

SHAPES AND SIZES

A wide variety of styles and sizes have grown out of the tremendous usage of steel containers (see Tables 1 and 2). The first figures of the container dimension represent the diameter of the container measured overall across the double seam; the second figure is the height, which is the vertical overall height measured perpendicular to the ends of the can. The first digit in each number represents inches; the second two digits represent sixteenths of an inch. Thus, a 307 × 113 can is 3 7/16 in. in diameter and 1 13/16 in. high. For rectangular cans, the first two sets of digits refer to base dimensions; the third set refers to can height.

Some can sizes are given various "names" by which the can is known. Some of these names that are identified in Table 2 are very old, dating back to the early history of

Table 1. Steel Can Styles and Sizes

Style	Dimensions in. (cm)	Capacity	Some Uses	Convenience Features
Aerosol cans (*1*)	202 × 214–300 × 709 (5.4 × 7.3–7.6 × 19.2)	3–24 oz (85–680 g)	Foods, nonfoods	Designed for fit of standard valve cap
Beer-beverage cans (*2*)	209.211 × 413 (6.5/6.8 × 12.2) 209.211 × 604 (6.5/6.8 × 15.9) 207.5/209 × 504 (6.3/6.5 × 13.3)	12 or 16 fl oz (355 or 473 cm^3)	Soft drinks, beer	Easy-open tab top, unit-of-use capacities
Crown-cap, cone-top can	200 × 214–309 × 605 (5 × 7.3–9 × 16)	4–32 oz (113–907 g)	Chemical additives	Tamperproof closure, easy pouring
Easy-open oblong can	405 × 301 (11 × 7.8) #1/4 oblong	4 oz (113 g)	Sardines	Full-paneled easy-open top
Flat, hinged-lid tins (*3*)	112 × 104.5 × 004–212 × 205 × 003.75 (4.4 × 104.5 × 0.64–7 × 5.9 × 0.6)	12–30 tablets	Aspirin	Easy opening and reclosure
Flat, round cans	213 × 013 (7.1 × 2.1)	1 1/2 oz (43 g)	Shoe polish	Friction closure
Flat-top cylinders (*4*)	401 × 509–610 × 908 (10.3 × 14.1–16.8 × 24)	1–5 qt (946–4730 cm^3)	Oil, antifreeze	Unit-of-use capacities; tamperproof since it cannot be reclosed
	211 × 306 (6.8 × 8.6)	8 fl oz (237 cm^3)	Malt liquor	
	211 × 300 (6.8 × 7.6)	8 oz (227 g)	Cat food	
	300 × 407 (7.6 × 11.3)	15 oz (425 g)	Dog food	
Hinged-lid, pocket-type can			Tobacco, strip bandages	Firm reclosure
Key-opening, nonreclosure can (*5*)			Sardines, large hams, poultry, processed meats	Contents can be removed without marring product
Key-opening, reclosure cans (*6*)	307 × 302–502 × 608 (8.7 × 7.9–13 × 16.5)	1/2–2 lb (0.2–0.9 kg)	Nuts, candy, coffee	Lugged cover reclosure
	401 × 307.5–603 × 712.5 (10.3 × 8.8–15.7 × 19.8)	1–6 lb (0.45–2.7 kg)	Shortening	Lid is hinged
	211 × 301–603 × 812 (6.8 × 7.8–15.7 × 22.2)	1/4–5 lb (0.11–2.2 kg)	Dried milk	Good reclosure
Oblong F-style cans (*7*)	214 × 107 × 406–610 × 402 × 907 (7.3 × 3.7 × 11.1–16.8 × 10.5 × 24)	1/16–1 gal (237–3785 cm^3)	Varnish, waxes, insecticides, antifreeze	Pour spout and screw-cap closure
Oblong key opening can (*8*)	314 × 202 × 201–610 × 402 × 2400 (9.8 × 5.4 × 5.2–16.8 × 10.5 × 61)	7 oz–23.5 lb (0.2–10.7 kg)	Hams, luncheon meat	Wide range of sizes, meat-release coating available
Oval and oblong with long spout (*9*)	203 × 014 × 112–203 × 014 × 503 (5.6 × 2.2 × 4.4–5.6 × 2.2 × 13.2)	1–4 fl oz (30–118 cm^3)	Household oil, lighter fluid	Small opening for easy flow control
Pear-shaped key-opening can (*10*)	512 × 400 × 115–1011 × 709 × 604 (14.6 × 10.2 × 4.9–27.1 × 19.2 × 15.9)	1–13 lb (0.45–5.9 kg)	Hams	Easy access through key-opening feature, meat-release coating available
Round truncated			Waxes	Screw-cap simple reclosure
Round, multiple-friction cans (*11*)	208 × 203–610 × 711 (6.4 × 5.6–16.8 × 19.5)	1/32–1 gal (118–3785 cm^3)	Paint and related products	Large opening, firm reclosure, ears and bails for easy carrying of large sizes
Round, single-friction cans	213 × 300–702 × 814 (7.1 × 7.6–18.1 × 22.5)	≤ 10 lb (4.54 kg)	Paste wax, powders, grease	Good reclosure
Sanitary or open-top can (three-piece) (*12*)	202 × 214–603 × 812 (5.4 × 7.3–15.7 × 22.2)	4 fl oz–1 gal (118–3785 cm^3)	Fruits, vegetables, meat products, coffee, shortening	Tamperproof, ease of handling, large opening
Slip-cover cans			Lard, frozen fruit, eggs	Simple reclosure

(*Continued*)

Table 1. Continued

Style	Dimensions in. (cm)	Capacity	Some Uses	Convenience Features
Spice can, oblong (*13*)	Wide range	1–16 oz (28.4–454 g)	Seasonings	Dredge top, various dispenser openings
Square, oval, and round-breasted containers (*14*)			Powders	Perforations for dispensing, reclosure feature
Two-piece drawn redrawn sanitary can	208 × 207/108 (6.4 × 6.2/3.8)	3–5 1/2 oz (85–156 g)	Food	Improved can integrity, stackability
	307 × 111 (8.7 × 4.3)	6 3/4 oz (191 g)		
	211 × 214 (6.8 × 7.3)	7 1/2 oz (213 g)		
	404 × 307 (10.8 × 8.7)	1 1/2 lb (680 g)		

canmaking. Today most cans are identified by their dimensions and not by name. Some of those names and can sizes listed are no longer applicable.

International standards for can sizes have been developed under auspices of the International Standards Organization (ISO), and cans are named in many countries on the basis of ISO standards. The specifications, measurements, and nomenclatures in ISO standards are used to describe cans in several countries. As can sizes listed in the ISO standards are the least likely to be restricted in international trade, it would be advisable when developing a new product line or changing package sizes to consider can sizes from the ISO standards. To comply with the ISO standards, the Can Manufacturers Institute has now recommended that U.S. can sizes be identified in metric measurements according to their body plug diameter rounded to the nearest whole number of millimeters, and their height must be rounded to the nearest whole number of millimeters as shipped from the can factory. For example, the 307 × 113 is identified as 83 × 46 mm.

Normally, during the selection of a container size for a specific item the concerns are not with providing a can with minimum surface area, but rather to minimize package metal weight (i.e., cost) within practical limitations. As an example, the filling, processing, and end attachment operations demand that the circular ends be made of thicker metal than the cylindrical body. The cost impact tends to reduce end diameter while increasing body height compared with the theoretical dimensions for minimum surface area. Furthermore the ends are attached to the body with mechanically overlapped metal formed into the body and ends. Again, the requirement for thicker metal for the ends would favor smaller diameter.

Similarly, the body beads (for strength against can collapse) and end beads (for rigidity) increase the effective surface area. This again favors a smaller diameter to minimize metal weight. In addition, the ends are punched out of a rectangular sheet of metal in the manufacturing process. Not only must the weight of metal used in the ends be minimized, but also the scrap produced from manufacturing round ends from square sheets has to be held to a minimal level.

Other limitations must also be considered. For example, the can manufacturer provides to the customer a can with one end attached (factory-finished can). The customer, in turn, fills the empty can and conveys it to another machine, where the top end (customer/packers end) is attached. To avoid spilling product until the top end can be attached, the can is not fully filled but a small “headspace” remains. Besides preventing product loss, this void provides for product expansion during processing and allows the consumer to open the can without splashing. This need for a headspace requires the can to be slightly taller than the theoretical height. In conveying, the laws of physics (inertia) state that the liquid juice will try to remain in place while the can begins moving. Without adequate headspace, juice would flow out of the open can. At a given conveying speed, less headspace is required for a smaller-diameter can than for a larger one. Therefore, it would be required to either increase can height for a

Table 2. Popular Can Sizes

Dimensions	Popular name	Inches	(mm)	Capacity[a] (oz)	(cm^3)
202 × 214		2.13 × 2.88	(54 × 73)	4.60	(137)
211 × 413	12 oz	2.69 × 4.81	(68 × 122)	12.85	(380)
300 × 407	#300	3.00 × 4.44	(76 × 113)	14.60	(432)
303 × 407	#307	3.19 × 4.38	(81 × 111)	16.20	(479)
307 × 409	#2	3.44 × 4.56	(87 × 116)	19.70	(583)
401 × 411	#2 1/2	4.06 × 4.69	(103 × 119)	28.60	(846)
404 × 700	40 oz	4.25 × 7.00	(108 × 178)	49.55	(1465)
603 × 700	#10	6.19 × 7.00	(157 × 178)	105.10	(3108)

[a] Completely filled.

larger diameter can, or customers would have to slow their lines to avoid spilling product. Increasing the can height would make air removal more difficult. Increased air (actually the oxygen in the air) content would have a somewhat negative effect on product quality.

CAN PERFORMANCE

No other container has all the attributes of the can: economy, strength, durability, absence of flavor or odor, ease in mass handling without breakage, compactness, lightness, and no light damage to product; the can also provides a hermetic seal and can be produced at exceptionally high speeds and be lithographed.

Food cans are expected to have tightly drawn-in ends. A can with swelled ends or with metal feeling springy or loose is not merchantable. Consumers associate such appearances with spoiled contents. Gases produced by microbial action can, indeed, cause such appearances. It is also important to remove air from food cans to retard adverse internal chemical reactions. Therefore, end units must be properly engineered to cope with their many environments. They must act as diaphragms that expand during thermal processing and return to their tight drawn-in appearance when a vacuum develops during cooling. The necessary strength is built into the end units by the use of adequate plate materials and design of end profile (see Figure 1).

Food ends are either profiled structures requiring a mechanical means for opening or designed with scores for easy opening. Since the introduction of the easy-opening/convenience end in the mid-1960s, a broad variety of products have been packaged in cans with this feature. These easily removed ends are available in various diameters, metals, coatings, and configurations to meet product needs. Units can be removed as a whole with separation occurring around the perimeter of the end or only a portion of the top can be removed. For those products where consumer protection is desired, easy opening ends can be provided with safety features.

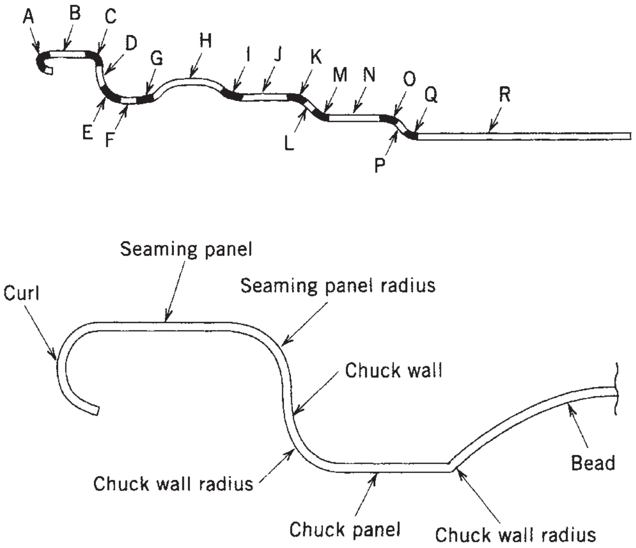

Figure 1. End profiles (A—curl, B—seaming panel, C—steaming panel radius, D—chuck wall, E—chuck wall radius, F—chuck panel, G—chuck panel radius, H—bead, I—bead-edge radius, J—first expansion panel, K—first expansion panel radius, L—first expansion panel step, M—first expansion panel step radius, N—second expansion panel, O—second expansion panel radius, P—second expansion panel step, Q—second expansion panel step radius, R—center expansion panel).

Ends used for carbonated beverages and aerosol products and those used for noncarbonated beverages packed using liquid-nitrogen pressurization, need little or no vacuum accommodation but rather resistance to high internal pressure. An end unit will permanently distort or buckle when the internal pressure exceeds its capability. This also renders the can unmerchantable because the distortion could affect the double-seam integrity.

Cans with inadequate body strength will panel because of internal vacuum or collapse under axial load conditions. A panel is the inward collapse of the body wall because of pressure differential. The condition may appear as a single segment, many flat segments, or panels that develop around the circumference of the cylindrical can body. Axial load is the vertical pressure that a packed container will be subject to during warehousing and shipping. The axial load capacity of a can is greatest when the cylinder wall is in no way deformed. A casual dent or designed structure that breaks the integrity of the straight cylinder will, in most cases, reduce the axial load capability of the container. Panel resistance and axial load capability are direct functions of the metal specification.

Panel resistance can be enhanced by the fabrication of beads in the body wall. This, in effect, produces shorter can segments that are more resistant to paneling. However, such beads predispose the container to early axial load failure. The deeper the bead is, the greater the paneling resistance but the greater the reduction in axial load capability. Many shallow beads can provide additional paneling resistance with less reduction in axial load capability, but labeling problems are often associated with cans with such bead configurations. Consequently, there are many bead designs and arrangements, all of which are attempts to meet certain performance criteria (7).

The steel container with proper material and structural specifications possesses, within limits, good abuse resistance. Excess abuse causes obvious damage, and severely dented cans are unacceptable in the marketing of canned products. Insidious events run parallel with excessive abuse. The double seams may flex momentarily, permitting an equally short-term interruption of the hermetic seal. Under some unsatisfactory conditions, this lapse can permit the entrance of micro-organisms that cause spoilage. This leakage can also admit air that accelerates adverse chemical reactions within the container. Many cans that show some level of damage are in the food distribution chain, and the safety of using such products is frequently questioned. To prohibit the sale of all containers that have insignificant amounts of damage would be a waste of large amounts of acceptable food (8).

CAN CORROSION

The steel container is not chemically inert and, therefore, can react with its environment and its contents. Steel's major ingredient, iron, is a chemically active metal that readily takes a part in reactions that involve water, oxygen, acids, and a host of other elements and compounds that can participate in oxidation reduction reactions (see the Cans, corrosion article).

The application of tin to the surface of sheet significantly increases the corrosion resistance of steel. Nevertheless, the potential for corrosion attack persists. Although numerous modifying factors produce varied patterns of attack, the chemical fundamentals for oxidative corrosion are the same. The basic requirements are always (a) differences in potential between adjacent areas on an exposed metallic surface to provide anodes and cathodes, (b) moisture to provide an electrolyte, (c) a corroding agent to be reduced at the cathode, and (d) an electrical path in the metal for electron flow from anodes to cathodes.

Under normal conditions, tin forms the anode of the couple, going into solution at an extremely slow rate and thus providing protection to the canned food. Under some conditions, iron forms the anode with resultant failure because of perforations or the development of hydrogen and subsequent swelled cans (hydrogen springers). Under other conditions, as when depolarizing or oxidizing agents (i.e., nitrates) are present, the removal of tin will be greatly accelerated with a consequent significant reduction in shelf life. Hydrogen is formed by the following two distinct processes: (a) at exposed steel areas that are protected cathodically by the tin–steel couple current and (b) as the steel corrodes, either because it is not completely protected by the tin or after the tin has been consumed. When perforations occur, they are usually the result of the same process in which hydrogen is developed except the steel is consumed in a localized area (9–11).

PRODUCT COMPATIBILITY

Products can be loosely categorized in terms of their susceptibility to chemical reaction with the can. Oils and fatty products seldom react with the metal surface of can interiors. However, when small quantities of moisture are present, either by design or accident, adverse reactions can develop. Highly alkaline products, usually nonfoods, will rapidly strip off tin or organic coatings but will not corrode the base steel. Acid products are corrosive, and highly colored acid foods and beverages are also susceptible to color reduction or bleaching, because of the reaction of the product with tin.

In this regard, when tin is exposed to some food products, a bleaching action occurs. Although this is objectionable with many products, such as the red fruits, and is avoided by the use of a suitable can lining, this bleaching action is desirable in certain instances. This is particularly true with the lighter-colored products such as grapefruit juice and grapefruit segments and sauerkraut. A slight bleaching action keeps the color light and compensates for the normal darkening effect, which may result from the processing or sterilization. Peaches and pears packed in cans completely enameled inside will be somewhat darker in color and slightly different in flavor than if packed in nonenameled plain tin cans. Although some individuals may prefer peaches packed in all enameled cans, it is doubtful that such cans will be produced under current conditions because the presence of an appreciable area of plain tin greatly increases the shelf life of this canned product.

Foods with $\mathrm{pH} > 4.6$ often have sulfur-bearing constituents (e.g., protein) and react with both tin and iron. This has been recognized as a problem for as long as such products have been canned, and the cause has been sought by many investigators. These low-acid foods form a dark staining of the tin surface and react with the iron to form a black deposit that adheres to both the can interior and the food product or can cause a general graying of the food product and liquor. This is often referred to as *black sulfide discoloration* or *sulfide black*. It can be unsightly but is harmless. Although sometimes exclusively a can headspace phenomenon, any interior container surface can be affected. Also, the black sulfide discoloration condition generally occurs during or immediately following heat processing, but occasionally it develops during storage. It is believed to be an interaction of the volatile constituents from the food product and/or oxidation–reduction agents in the food product with an oxidized form of iron from the tinplate. The staining of the tinplate is not part of this reaction (13, 14).

Although tin sulfide staining and black sulfide discoloration is harmless from a product standpoint and has no detrimental effect on container or product shelf life, it has been found to be objectionable from an aesthetic standpoint.

In addition to container and product appearances, some food products and beverages are highly sensitive to off-flavors caused by exposure to can metals (12).

CAN METAL

The term "tin can" is somewhat of a misnomer, because tin cans are made of steel sheets that have either no tin or coated with a thin film of tin. The steel products commonly produced for container components have a theoretical thickness ranging from 0.0050 to 0.0149 in. (0.127 to 0.378 mm) expressed as weights per base box* of 45–135 lb. Depending on end use, the plate (blackplate) can be processed by the electrolytic deposition of metallic chromium and chromium oxides and coated with a lubricating film (tin-free steel) or coated with tin by electrodeposition. Improvements in electrolytic tinplate, since its commercial introduction in 1937, have increased both its

---

* *Base weight*—approximate thickness in pounds per base box: (base weight $\times$ 0.00011 = theoretical thickness). *Base box*—unit of area: 112 sheets, 14 in. $\times$ 20 in. = 31,360 in.^{2} (217.78 ft^2); dimensions in increments of 1/16 in.

Package: 112 sheets of any dimensions. *Number of base boxes in a package:* use ratio tables (ASTM A623) or L(in.) $\times$ W(in.) $\times$ 112 = 31,360. Number of base boxes in a coil: L(in.) $\times$ W(in.) = 31,360.

versatility and uniformity of performance. Electrolytic plate has entirely replaced hot-dipped plate in present-day cans. The result of these changes/improvements has allowed for reductions in tin coating weights. Tin plate carries a coating of tin that may vary from 0.000015 to 0.000100 in. in thickness, depending on the grade. Differential coated electrolytic tinplate, with different coating weights of tin on each side of the steel baseplate, has been used commercially since 1951. Containers made of differential coated tinplate have an inside tin coating of sufficient thickness to withstand the corrosive attack of processed foods and an outside coating adequate to withstand the rigors of processing and atmospheric conditions. The thickness of tin coating is designated by the total amount of tin used on coating one base box of plate. For example, #25 plate is electrolytic tinplate on which 0.25 lb of tin was electroplated on one base box, covering both sides of the sheet. Thus, the coating on one side of the sheet is one half that amount of tin, or 0.125 lb.

For structural integrity, base weight or gauge thickness is a prime consideration, but any increment of base weight is an increment in container cost. Often, the temper or design of can components can provide added strength without the need to add base weight. The chemistry and general metallurgy of the steel plate has considerable influence on the performance of steel containers. Before the advent of continuously annealed and cold-rolled double-reduced steel plate, which influence plate stiffness or temper, it was necessary to add ingredients to the steel to produce high tempers. Temper as applied to tin-mill products is the summation of inter-related mechanical properties such as elasticity, stiffness, springiness, and fluting tendency. During the development of the use of cold-reduced steel for mill products, the fabricators determined that various steel compositions and degrees of hardness in the base metal would permit the production of containers for a wider variety of products. Although there are certain limitations to the Rockwell hardness test,[†] it has been adopted as an industry standard because of its simplicity and overall good correlation with fabrication requirements. As a result, ranges of Rockwell hardness were developed to guide the steel manufacturers, and these Rockwell hardness ranges have become accepted as temper ranges.

Rephosphorized steel was necessary to fabricate beer can ends with sufficient buckling resistance. When the market opened for canned carbonated soft drinks, rephosphorized steel was not acceptable because of the corrosive nature of soft drinks and the high susceptibility of this plate to corrosion. Test pack experience indicated that some could perforate the endplate in 4–6 weeks. The availability of continuously annealed plate without the corrosion sensitivity properties of rephosphorized steel permitted the canning of soft drinks. It was still necessary to use heavier base weight material for the high-carbonation drinks. The added stiffness afforded by cold-rolled double reduced plate permitted the canning of all soft drinks with carbonation ranging from 1.0 to 4.5 volumes in cans with the same basis-weight ends. These same economies have been applied to other products where container fabrication could be adapted to the degree of stiffness characteristic of this plate (14).

CAN FABRICATION

One who is not associated with the container industry seldom realizes that the manufacture of cans is classed as one of the most mechanized industries, and in addition to the large amount of automatic equipment used, the speed at which cans are made no doubt rates among the faster automatic operations (see the Metals Cans, Fabrication article).

The most common type of steel can produced today are three-piece cans that consist of a body with a welded or soldered side seam in conjunction with two end components (see Figure 2). Another popular structure is the two-piece can, which is produced by either a single-draw, draw-redraw (DRD), or drawn-and-iron (D & I) process. Some limited quantities of cemented side-seam cans are produced for dry and nonthermal processed type products.

Most three-piece tinplate cans currently made have wire-welded side seams. The traditional soldered can is now in the minority and only is used for irregular-type meat cans and specialty cans. The solder used in canmaking is now generally composed of tin and silver. In July 1995 the U.S. Food and Drug Administration (FDA) has issued a final rule prohibiting the use of lead solder in the manufacturing of food cans, including imported products. The tin/silver solder is categorized as a soft solder and has a relatively low melting point, usually below 450°F, (232°C). Tinplate cans are easily soldered because the tin solder alloy readily fuses with the tin on the surface of the steel. In addition to providing a hermetic seal, solder also contributes to the mechanical strength of the seam by forming a metallurgical bond with the tin plate. Solder also has a certain amount of ductility and can be plastically deformed within certain limits. This characteristic permits the soldered laps of the body to be flanged and then incorporated into the double-seaming process. The speed of the can manufacturing line, the temperature of the molten solder, and the length of cooling all play an important role in good soldering operations. The soldered side seam can has been replaced for many can structures with an electrical resistance—welded seam. Benefits include a clean compact process and a much narrower weld area, which allows virtually wrap-around decoration and greater integrity, particularly for seaming-on of ends, because there is much less metal overlap thickness at the weld compared with the soldered lock and lap seam employed on soldered cans. The welding unit is easily integrated and ancillary equipment used on solder bodymaker lines.

Two reliable welding systems were developed and used commercially: The forge–wheel welding system developed

---

[†] A device used to measure the surface hardness of canmaking plate. A 1/16-in.-diameter ball penetrator is impressed into the plate surface with a 30-kg load. The measurement expressed as a Rockwell 30T reading, is inversely proportional to the penetration. An arbitrary scale is used to convert Rockwell readings into plate temper values. The stiffness increases from T-1 to T-6.

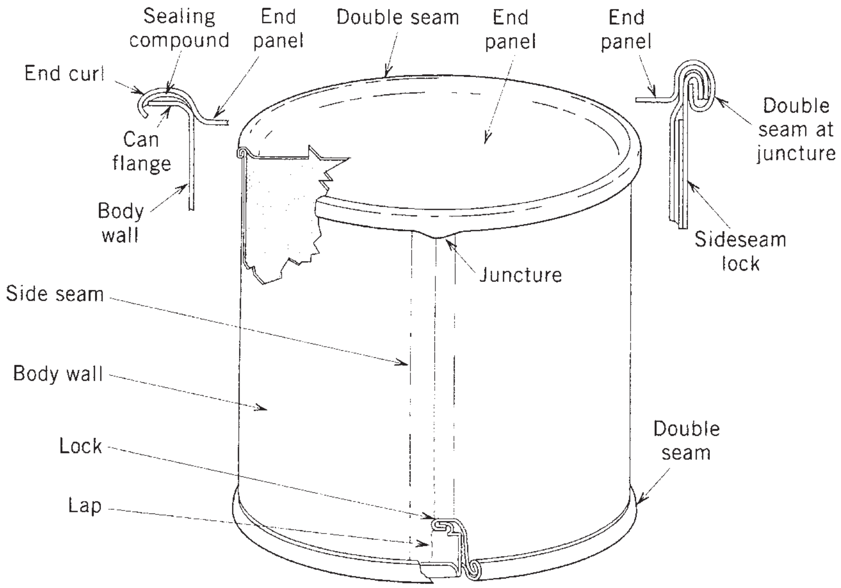

Material	Application	Method
Metal plate	Can units (bodies and ends)	Bodymaker; end press
Solder	Side seam sealling and bonding	Side seamer
Flux	Soldering aid	Bodymaker and/or side seamer
Sealing compound	To can ends for double-seam sealing	Comound liner
Protective coating	Metal plate protection	Roll coater or spray
Body and ends	Affix ends to body	Double-seamer

Figure 2. Double-seam three-piece can.

by Continental Can Company, and the wire weld system was developed by Soudronic AG (15, 16). Both are resistance-welding systems and variations of a forge weld (see Figure 3). The materials to be welded together are heated by an electric current passing through the materials. The resistance of the overlapped side seam produces the required welding heat. To obtain a weld, the heated material must be pressed together or clamped. This clamping capability is provided by wheels in the welding process. Because welded seams are basically lap seams, a raw edge exists, which generally requires a side-seam stripe coating application to minimize metal exposure.

For economic reasons, the forge-wheel welding process is no longer a viable commercial operation. Such forge-welded cans used tin-free steel (TFS) plate and started with the grinding of the body blank edges to remove oxide and chromium to ensure acceptable welds. After blanks are formed into cylinders, the edges are tack welded together to produce an overlap, and the seam is made by rolling electrodes that weld the interior and exterior of the lap simultaneously.

In the wire welded operation that is used extensively today, the welding process consists of passing the seam with a small overlap between two electrode wheels over which runs a copper wire. The use of copper wire as an intermediate electrode is necessary to remove the small amount of tin picked up from the tinplate during the welding process, which would otherwise reduce the welding efficiency. A constantly renewable copper surface is presented to the weld area. To obtain a weld, the heated material is pressed together or clamped by wheels in the welding process (see Figure 3).

Another innovation has been the introduction in the early 1960s of the seamless two-piece can (integral base and body, with one customer end). Metal forming technology has been used to produce these cans from a flat sheet. Drawn and ironed cans employ tinplate and are manufactured by first drawing a shallow cup and then extending the sidewalls by thinning the metal between two concentric annular dies in an "ironing" process. This results in a can with a normal base thickness and thinner walls, and it is economical in materials usage. The capital cost of D&I canmaking plants is high, but unit costs are the lowest of all container types if the throughput is sufficiently great. Because of the thin walls, body beading is essential to maintain rigidity for vacuum-packed food cans. The other two-piece can achieves final can dimensions through a series of consecutive drawing operations. In these DRD cans, the thickness of the bottom end and the side walls is largely the same and there is not the same opportunity for saving on metal. Unlike the D&I can,

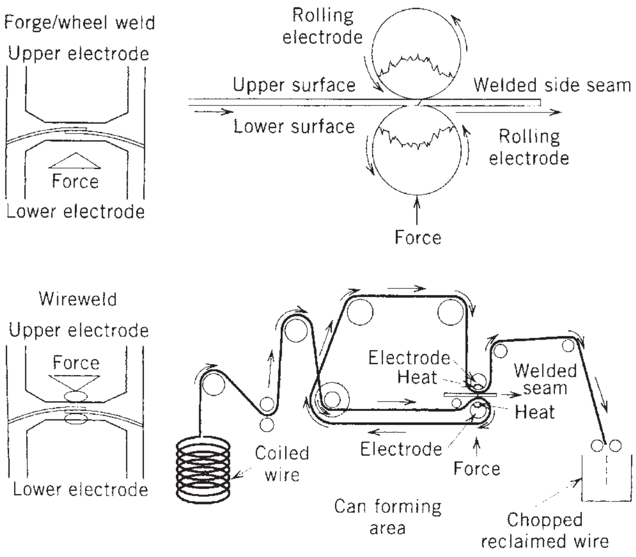

Figure 3. Welding process.

which uses tinplate and inside spray coatings, the DRD can uses TFS-precoated sheet or coil plate.

Organic sealing materials have been used as side-seam sealants mostly before the advent of the welded can. They have been used in situations where soldered structures were not compatible with the product, when special wraparound lithography is desired, and when tin-free steel is used. For the most part, polyamides and organosols are used as the basic resin of organic sealing materials. They are normally used for a variety of can sizes, shapes, and styles that are used for dry and nonfood products. However, a polyamide hot-melt adhesive has been successfully used in oblong meat cans that are subjected to a high-temperature thermal process.

Much consideration has been given to cost reductions of the metal can. In conjunction with thinner gauge and higher temper plates, the reduction of the can diameter of the two-piece beverage cans in the area of the end unit has reduced the cost of metal cans significantly. This body diameter reduction is usually accomplished by a die necking-in process, which is performed prior to flanging. The necking-in process tends to alter the can height, so careful body cut edge and/or can trim diameter must be calculated to afford these accommodations. With three-piece cans, this necked-in structure can be fabricated on both ends; however, it is done on only one end of two-piece cans used for liquid-type products.

The popularity of steel cans has been in large measure caused by the double seam's ease of fabrication and robust resistance to physical abuse. This seam structure is the portion of a can that is formed by rolling the curled edge of the end and the body together to produce a strong leak-proof structure. This seam is normally formed by a set of first and second operation seaming rolls while the end and the can body are held together by a seaming chuck. The first operation seaming roll forms the seam by interlocking the curled edge of the end with the flange of the can body. The second-operation seaming roll compresses the formed seam to make a hermetic seal (Figures 4–6).

Because metal-to-metal contact does not produce good sealing capability, a rubber-like material known as *sealing compound* is applied to the loose end-unit seaming panel that becomes engaged to the body flange to form the double seam. This material acts like a sealing gasket. Compound placement and compatibility with the product are important in providing for a hermetic seal. End-sealing compounds are generally one of two types: (a) water base—rubber/water dispersions and (b) solvent base—rubber/solvent dispersions.

COATINGS

Organic protective coatings are used as can linings to provide the additional protection above that provided by the metal substrate. These organic materials are applied to a flat plate or a coil-coated plate and are cured by means of continuous ovens. Spraying after complete or partial fabrication is also done when low-metal-exposure cans are required for aggressive-type products. It is desirable to use can linings that possess a reasonable degree of latitude in film weight and bake. The roller coating machines and the spraying machines used to apply linings provide means for close control of film weight. The films, of course, are relatively thin, about 0.0001–0.0005 in. thick or with a weight of 2–6 mg/in.^{2} Control limits generally allow for variation of ± 0.5 mg/in.^{2}

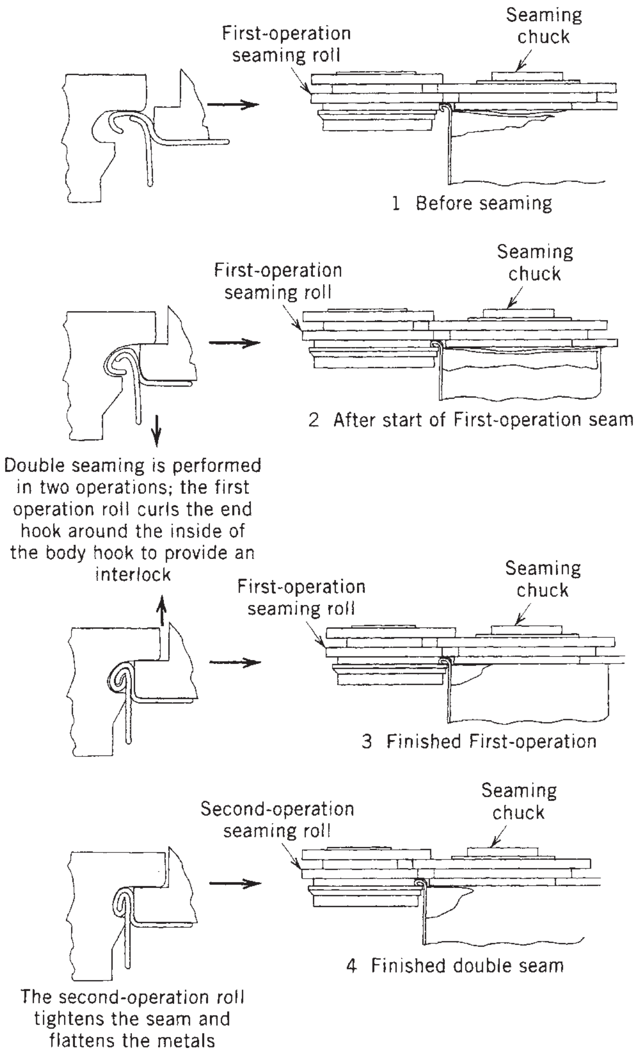

Figure 4. Sequence of operations in seaming a can end onto a can body.

Can linings must be nontoxic, meet government standards, be free from odors and flavors, and be readily applied and cured. They also must withstand the mechanical operation of canmaking, must provide the required barrier between canned product and metal, and finally must be economical. Accelerated tests are used as screening or control tests, and evaluations under commercial conditions are normally required before final approval of a can lining is standardized. When required, product test packs will be made and monitored over a period of time to confirm that the coating material is compatible with the intended product and/or container components.

Coatings accomplish several purposes. They make possible the use of less costly steels that permit the use of

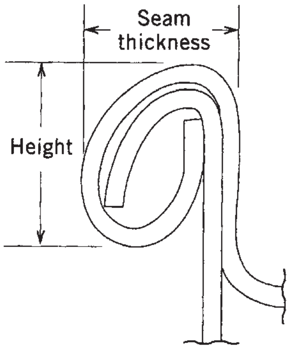

Figure 5. First operation.

different types of tin-mill products in the can body and ends. They protect the steel against corrosion and the product from the steel and on the can exterior, minimize rusting, and serve as a background to or improve adhesion for lithography. Inorganic protective coatings that often contain phosphates, chromates, or both are usually applied to tin-free steel at the tin mill to prevent rust and provide a good surface for organic materials. If tin or iron is detrimental to a product, then a suitable protective coating can be applied. These coatings can prevent bleaching discoloration by tin to dark pigments of foods such as strawberries, blueberries, blackberries, and cherries. Also, protective coatings can reduce the metal exposure for metalsensitive products such as beer and certain soft drinks. Other products would react with the unprotected can interior to cause corrosion or cause discoloration of both container and product. Finally, a protective coating can mask unsightly discoloration of the can interior.

Currently, the major trend in coating technology is toward waterborne coatings to replace conventional organic coatings. Typical organic coatings contain as much as 70% solvents and are subject to stringent environmental restrictions. One answer is the aqueous coating, which contains only a small amount of organic solvents and can use the same coating and curing equipment. These aqueous coatings, which were commercialized for food cans in the early 1990s, exhibit the same good flow and leveling characteristics as found with solvent-base coatings.

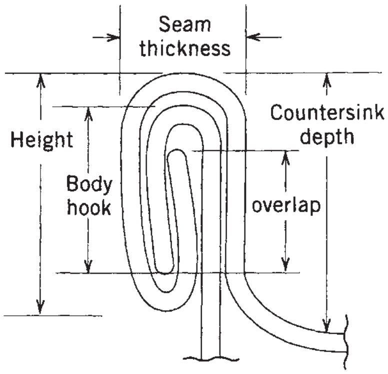

Figure 6. Second operation.

Metal exposure in the side seam area is a common occurrence with all three-piece can structures, and a special protective coating material (a “side stripe”) is sometimes applied to the inside and outside side seam area by spray or roller, online, followed by curing. Most stripes used are organic liquid materials, which provide only minimal coverage. Polyester powder (thermoplastic) electrostatic spray stripes give superior performance. These types of stripe coating provide 100% side-seam coverage, but they are more costly than liquid stripes. However, powder stripes have poor heat resistance and are not recommended for use in cans that will be subjected to aseptic process conditions that employ super-heated steam.

Organic protective coatings were first applied to can interiors to protect the red fruit colors. Coatings used to combat this problem were often called “regular” or “R-enamels.” Now they are generally identified by a number, letters, or a combination of numbers and letters.

If ordinary oleoresinous can linings are used for foods containing appreciable quantities of protein such as corn, peas, and fish, then a black tin sulfide stain will form under the enamel; under certain conditions, black sulfide discoloration will form at iron-exposed small scratches and fractures. To minimize black sulfide discoloration, oleoresinous enamels used for such products contain about 6% of a fine-particle-size zinc oxide, which is added for its chemical reactivity and not as a pigment. The sulfides that form during the processing or heat sterilization of the protein-containing foods react with the zinc oxide, which “de-zincs” and allows the formation of zinc sulfide. Zinc sulfide is white and generally goes unnoticed. Can linings containing zinc oxide were first developed for corn cans and were called “corn enamels”; their use was soon extended to other products, and they were then called “C-enamels.”

Sulfide staining appears as a brown or brownish blue stain on the surface of the tin coating and cannot be removed by rubbing. Sulfide staining occurs not only on exposed tin surfaces but also in tin surfaces protected by many of the enamels because the volatile sulfur compounds involved can permeate certain types of enamel coating. To prevent underfilm sulfide staining, enamels impervious to volatile sulfur compounds are used where possible. However, such enamels are not always compatible with the product being packed, in which case it is necessary to use a pigmented enamel that will either inhibit or mask the sulfide staining. These methods of inhibiting or masking sulfide staining are limited to their application, because not all enamels combine satisfactorily with a given pigment or additive.

Many coatings are now in use and being developed for steel cans used for a variety of food and nonfood products. Some of those materials, which are supplied by coating suppliers to the application facility and are now being used, include acrylic, alkyd, epoxy amine, epoxyphenolic, oleoresinous, oleoresinous w/zinc oxide, phenolic, polybutadiene, vinyl, and vinyl organosol. Each material has its own unique performance characteristics with regard to its application, fabrication, product compatibility, flavor and odor, process resistance, and so on.

It has been apparent since the early days of canning green vegetables that the bright green darkens as a result of the required thermal process, that is, the bright green chlorophyll undergoes a chemical change to an olive green pheophytin. There have been several studies conducted to inhibit this chemical change. They all demonstrate an inhibition capability by using additives containing magnesium ions and careful control of pH by the addition of hydroxyl ions. All of these procedures cause some toughening of the product, which probably discourages any commercial pursuits. The Crown Cork and Seal Company, Inc. has a patented process called "Veri-green," which incorporates additives to the product as well as the protective coating. The materials added are specific for particular products, and pretesting is necessary (17–21).

DECORATION

Decorative lithographic designs afford an external protective coating. The process of application is known as *offset lithography*. Lithography is a printing process based on the fact that oil and water do not mix. The decorative design to be printed on the tinplate is etched onto a plate known as a *master plate* in such a manner that the image area to be printed is ink receptive, whereas the portion to be blank is water receptive. A lithographic design is a system or a series of coatings and inks printed on plate in a particular sequence. The order of laydown is determined by the purpose of the coat, the kind of coating or ink, and the baking schedule for each coat or print. The print process is usually carried out with sheet stock prior to slitting into can body blanks or scroll shearing into the end stock. The sequence and type of equipment used depends on the design and the ultimate use of the can (see the Decorating article).

With the advent of two-piece cans, less elaborate designs are used on beer and soft-drink cans because it was necessary to use presses that print completely fabricated cans. The finishing varnishes are usually the external protective coatings. They not only protect against corrosion but also must be rugged enough to resist scuffing and abrasion.

For drawn-and-iron beaded food cans, the outside is coated with a water-based colorless wash coat material. After packing, the customer glues a paper label to the body wall, which identifies the contents.

TECHNOLOGICAL DEVELOPMENTS

The steel can has grown despite competitive pressures. During war years, tin and iron become controlled materials, and other more available packaging materials usually make inroads into the steel-can market. These same constricting conditions often give rise to the development of methods that reduce the consumption of the controlled materials. During World War II, the electrolytic deposition of tinplate was commercialized, which resulted in substantial reductions in tin consumption. Competition from aluminum in the beverage-can business gave impetus to pursue the use of tin-free steel to afford more favorable economics. Successful cost reductions with no reduction in performance, however, has been the cause for the continued growth of the steel can. The advent of cold-rolled, double-reduced plate permitted significant reductions in base weight. To accommodate the fabricating characteristics of this material, new approaches in end manufacture and double seaming had to be developed. Another direction to cost reduction was to reduce materials usage. This was accomplished by using smaller-diameter ends and necking-in the can bodies to accommodate the reduced-diameter ends. This saving can be directed to one or both ends on three-piece cans.

The use of convenience features has been an important stimulus to the growth of steel cans. Key-opening lids and rip strips have been part of fish and meat cans for generations. This style was also standard for coffee and shortening cans, but economic pressures caused a change to less expensive open-top food cans. Development of the integral rivet and scored end solved many can opening problems, particularly in the beverage and snack-food businesses.

There have been dramatic developments in the overall operation of can-making plants with increasing use of automated procedures and computerized control systems and techniques to optimize production processes. There has been a reduction in the number of operatives, but the working conditions of those remaining have been greatly improved. These new developments are ensuring that the can remains cost effective and reliable.

With thinner gauge plates and faster production speeds, can-making equipment has become increasingly precise in its operations. Reliability is all important, and quality-control measures have been put in place at every critical step to ensure container integrity. These include gauge measurements, weld monitors, and leak testing. Also there is more use of sophisticated statistical control charts, statistical analysis, and design of experiments to solve complex problems, particularly in manufacturing and technical areas.

There have been innovations in coatings technology such as the introduction of waterborne coatings, coil coating, powder coating in electrostatic spray systems, and organic resins that are deposited electrophoretically on the can components from an aqueous solution. Increasing use is being made of the new ultraviolet systems, which dry-sheet coatings and inks in seconds at ambient temperatures. Also, laminate polymer films have been introduced to compete with liquid organic coatings to metal substrates that are used for can components.

Early in the 1970s, health authorities and the FDA became concerned about the increment, if any, of lead and other heavy metals that are picked up by foods packed in soldered cans. The manufacturers of baby foods and baby-formula foods or ingredients, such as evaporated milk, were the first to be asked to reduce the level of lead in their canned products. Better care during soldering operations and ventilation resulted in major reductions but did not eliminate all lead in the respective foods. Currently all soldered cans being produced are using lead-free solders. Also, the introduction of the three-piece welded and two-piece cans have virtually eliminated the concern of lead contamination (22).

BIBLIOGRAPHY

1. *Canned Foods, Principles of Thermal Process Control, Acidification and Container Closure Evaluation*, 3rd edition, Food Processors Institute, Washington, DC, 1980, pp. 7, 141.
2. American Can Company, *Canned Food Reference Manual*, McGraw-Hill, New York, 1947, pp. 25–29.
3. S. C. Prescott and B. E. Proctor, *Food Technol.* **4**, 387 (1937).
4. E. J. Cameron and J. R. Esty, *Canned Foods in Human Nutrition*, National Canners Association (NFPA), Washington, DC, 1950.
5. G. A. Hadaby, R. W. Lewis, and C. R. Ray, *J. Food Sci.* **47**, 263–266 (1982).
6. B. K. Watt and A. L. Merrill, "Composition of Foods—Raw, Processed, Prepared" in *U.S. Department of Agriculture Handbook*, 8th edition, Washington, DC, 1963.
7. Crown Cork and Seal Company, Inc., unpublished information.
8. *Safety of Damaged Can Food Containers*, Bulletin 38-L, National Canners Association (NFPA), Washington, DC, 1975.
9. R. R. Hartwell, *Adv. Food Rev.* **3**, 328 (1951).
10. R. P. Farrow, J. E. Charboneau, and N. T. Loe, *Research Program on Internal Can Corrosion*, National Canners Association (NFPA), Washington, DC, 1969.
11. N. H. Strodtz and R. E. Henry, *Food Technol.* **8,** 93 (1954).
12. J. S. Blair and W. N. Jensen, "Mechanism of the Formation of Sulfide Black in Non Acid Canned Products," paper presented on June 12, 1962 at the 22nd Annual Meeting of Food Technologists, Miami Beach, FL.
13. J. E. Chabonneau, "The Cause and Prevention of 'Sulfide Black,'" in *Canned Foods*, National Food Processors Research Foundation, Washington, DC, 1978.
14. "Tin Mill Products" in *Steel Products Manual*, American Iron and Steel Institute, New York, 1968.
15. U.S. Pat. 3,834,010 (Sept. 10, 1974), R. W. Wolfe and R. E. Carlson (to Continental Can Co.).
16. Soudronic AG, CH-8962, Bergdietikon, Switzerland.
17. F. A. Lee, *Basic Food Chemistry*, Avi Publishing, Westport, CT, 1975, pp. 163–165.
18. U.S. Pat. 2,189,774 (Feb. 13, 1940), J. S. Blair (to American Can Co.).
19. U.S. Pat. 2,305,643 (Jan. 5, 1942), A. E. Stevenson and K. Y. Swartz (to Continental Can Co.).
20. U.S. Pat. 2,875,071 (May 18, 1955), Malecki and co-workers (to Patent Protection Corp.).
21. U.S. Pat. 4,473,591 (Sept. 25, 1984), W. P. Segner and co-workers (to Continental Can Co.).
22. Bakker, "The Competitive Position of the Steel Can" in *Technology Forecast*, Avi Publishing, Westport, CT, 1984.

CAPPING MACHINERY

In categorizing capping machinery that applies closures to bottles and jars, the best place to start is with the closure itself (see Closures). The different types of machinery for applying these closures have features in common (e.g., straight-line vs. rotary). This article provides a basic description of machinery used for continuous-thread (CT) closures, vacuum closures, roll-on closures, and presson closures.

CAPPERS FOR CT CLOSURES

There are four basic types of capper for CT closures, which are as follows: hand cappers and cap tighteners; single-spindle (single-head), intermittent-motion cappers; straight-line, continuous-motion cappers; and rotary continuous-motion cappers.

Torque Control. All automatic cappers apply the closures mechanically, but they differ in their approaches to torque control. In general, torque control is achieved with chucks or spinning wheels (rollers). Straight-line, continuous-motion cappers generally control torque mechanically, but all other types use either pneumatic or mechanical means, or combinations thereof.

A pneumatic chuck contains a round flexible ring with a hole in the center (1). The cap enters the hole when the ring is in its relaxed state. When air pressure is applied, the ring compresses and grips and holds the cap while it is moved to the bottles and screwed on. The air pressure may be applied by the downward movement of an air piston, or it may be directed into the space between the ring and the wall of the chuck (see Figure 1).

The amount of torque is controlled by a pneumatic clutch operated by pressure from low-level pneumatic lines (see Figure 2). It contains two or more sets of disks that are pressed against each other when air is applied, which connects the chuck and drive shaft. When the cap is screwed on to the point that the torque being applied equals the force being applied to the disks by air pressure, the disks start to slip and the drive shaft is disconnected.

A typical mechanical chuck has jaws that close around the skirt of the cap to maintain a grip until the closure application is complete (see Figure 3). A mechanical chuck can be controlled by a pneumatic clutch, but it also can be controlled by a spring-loaded clutch or a barrel cam. The pneumatic clutch is similar to the clutch used for a pneumatic chuck. A spring-loaded clutch (see Figure 4) uses a spring to disconnect the chuck from the power source when the preset amount of torsion has been applied to the cap (1). Torque can be increased by compressing the spring by screwing down the collar on top of the spring; it can be decreased by moving the collar to loosen the spring. The chuck opens to release the bottle when the torsion on the cap matches the torsion on the spring.

On some capping machines, the heads are raised and lowered by a follower riding on a barrel cam (see Figure 5). Manufacturers of capping machinery have different approaches to torque control based on the principles or combinations thereof, described above.

Hand Cappers/Cap Tighteners. With operating speeds of up to 20 caps/min, hand cappers are used for low

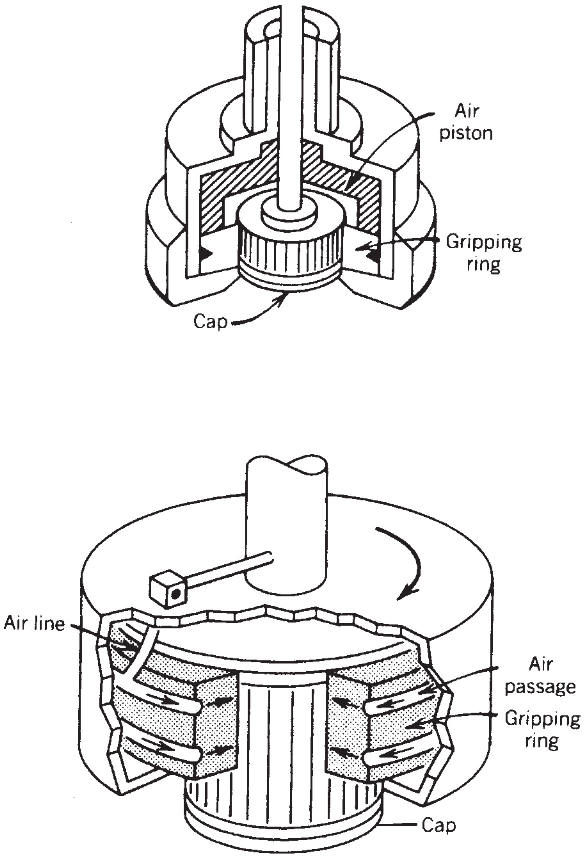

Figure 1. Pneumatic chuck (1).

production volumes or unusual caps. Hand cappers work with some kind of handheld chuck. Cap tighteners, a step up in automation, are useful for pump and trigger-cap applications, retorqueing after induction sealing, and short production runs in general.

Single-Spindle, Intermittent-Motion Cappers. Using either pneumatic or mechanical torque control, these cappers can theoretically apply up to 60 caps/min, and they are useful for relatively short production runs. Their versatility is limited by the intermittent motion that would tend to cause spillage from widemouth containers.

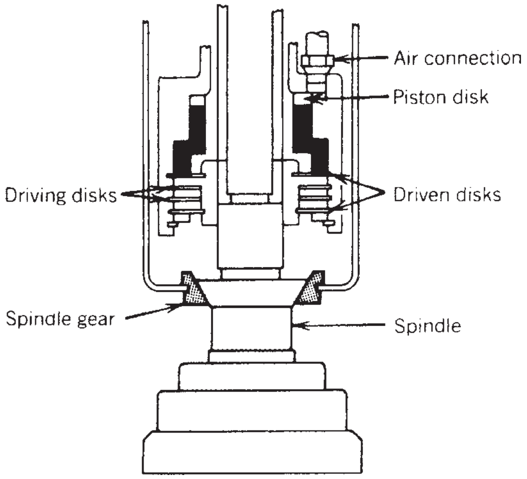

Figure 2. Pneumatic clutch (1).

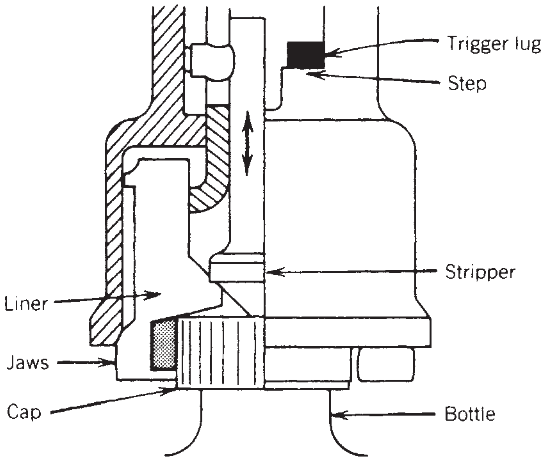

Figure 3. Mechanical chuck with jaws (1).

Straight-Line, Continuous-Motion Cappers. On these machines, torque-control clutches are built into multiple spindles that turn the rollers (disks) that apply the caps (see Figure 6). In contrast to the single-spindle cappers, the bottles never stop and the speed of capping is limited only by the speed of the conveyor. The capability of the machines has traditionally been quoted as 60–300 caps/min (in contrast to rotary machines that can be more than twice as fast), but by using multiple spindles, speeds can be increased greatly; for example, with eight spindles at four stations, production can be as high as 600/min or more, depending on the size of the cap and the container.

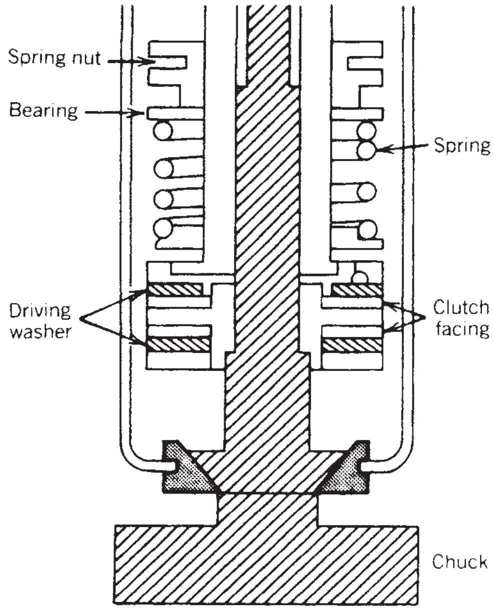

Figure 4. Spring-loaded clutch (1).

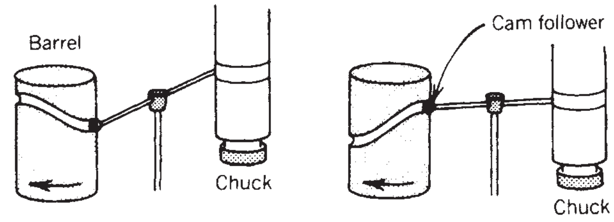

Figure 5. Barrel cam arrangement (1).

The major advantage of straight-line (vs. rotary) cappers is that they generally do not require change parts, and cap and container sizes can be changed with little downtime.

Rotary Continuous-Motion Cappers. Rotary cappers use many heads in combination in a rotary arrangement that permits high speeds: 40–700/min (see Figure 7). The speed of application of one cap by one head is limited, but rotary cappers can achieve 700/min through the use of 24 heads. (Production speeds are always related to the size of container and cap. Rotary machines are available with more than 24 heads, but 700/min is a rough upper limit.)

Extra Features. Most of the automatic machines can be supplied with optional equipment for flushing with inert gas. A time existed when application torque could be measured only by testing removal torque, but today's capping machinery is equipped with sensors that provide continuous measurement and constant readouts.

CAPPERS FOR VACUUM CLOSURES

Three basic types of vacuum closure exist and are as follows: pryoff side-seal; lug; and presson twistoff. The pryoff side-seal closure, the earliest type of vacuum closure, has a rubber gasket to maintain the vacuum in the container. This type of closure has been displaced in the United States by the other two types. The vacuum is generally achieved by a steam flush (2), which also softens the plastisol to facilitate sealing.

Lug Closures. Lug closures have 4–6 lugs that grip onto special threads in the bottle finish as well as a flowed-in plastisol liner (gasket). The lugs mate with the threads with a half turn. This process is almost always done by straight-line machinery that incorporates two belts moving at different speeds. Maximum production speed with this type of closure and machinery is about 700/min.

Press-On Twist-Off Closures. These closures are used primarily on baby-food jars, but they now are being used on other products as well. One of the reasons for their increasing popularity is the very high production speeds attainable. Like lug closures, they have a plastisol liner, but the liner is molded for high precision. Unlike lug closures, the skirt of the closure is straight. The seal is achieved when the plastisol softens and conforms to the bottle threads. Unlike threaded closures—which require multiple turns—and lug closures—which require a half-turn—presson twistoff closure require no turn at all. They are applied by a single belt that presses the closure onto the bottle at very high speed (e.g., over 1000/min on baby food jars). These closures are held on by vacuum, which is

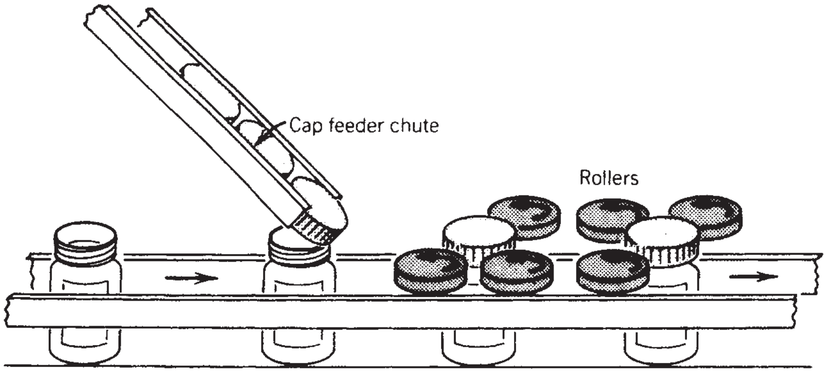

Figure 6. Roller screw capping (1).

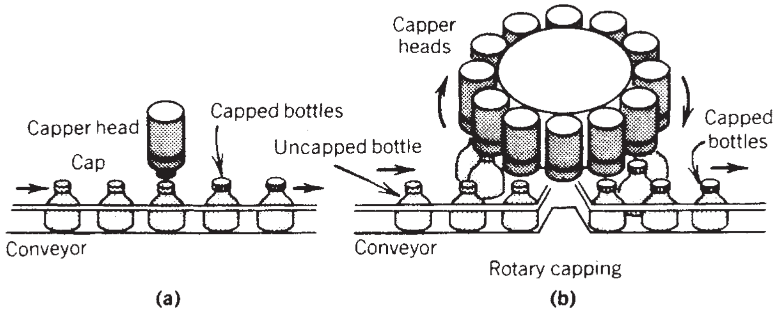

Figure 7. (a) Straight-line and (b) rotary capping (1).

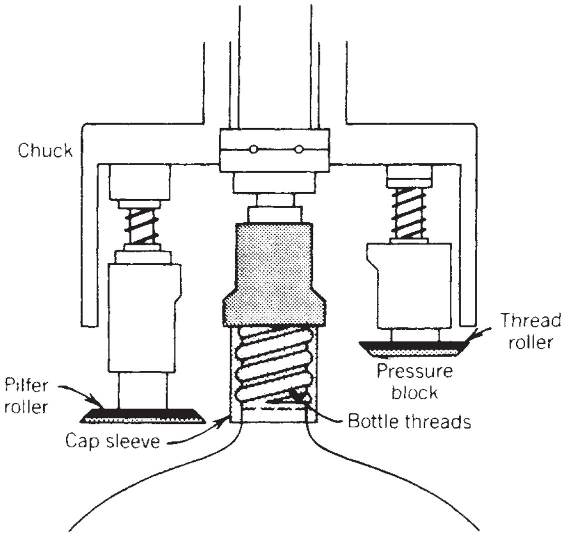

Figure 8. Applications of roll-on closures (1).

achieved by sweeping the headspace with steam. The use of these closures was limited at one time by a requirement of reduced pressure of at least 22 in. of mercury (74.5 kPa) to hold them on. Not all products benefit from that degree of vacuum. A recent development is the ability to use these closures with a much lesser degree of vacuum.

CAPPERS FOR ROLLON CLOSURES

A rollon closure has no threads before it is applied. An unthreaded (smooth) cap shell (sleeve) is placed over the top of the bottle, and rollers in a chuck (see Figure 8) form the threads to conform with the threads on the bottle finish. The chucks are raised and lowered by capper heads. These closures are available with and without a pilferproof band that is a perforated extension of the skirt. If such a band exists, it is rolled on by a special roller in the chuck. Operating speeds of the machines are in roughly the same range as rotary cappers for CT closures: up to 700/min.

CAPPERS FOR PRESSON CLOSURES

The familiar crown closure for carbonated beverage bottles is one type of presson closure. The cap is applied by rotary machines that can operate with production rates of over 1000/min (see Figure 9). Other types of presson closures are snap-fit caps, with or without a tamper-evident band; dispensing caps, which are often secondary closures; and overcaps.

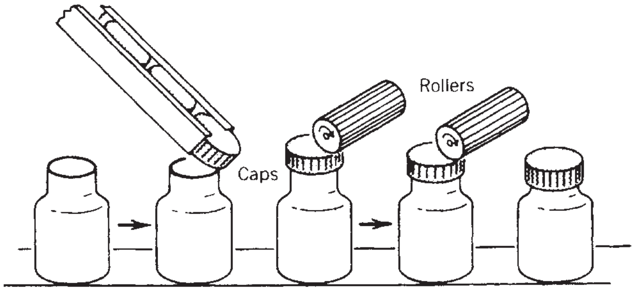

Figure 9. Roller application of presson closures (1).

Like screw caps, press-on caps can be applied by chucks or rollers, but the chucks and rollers do not need twisting action, nor clutches for torque control. Several approaches exist for controlling the amount of pressure applied by chuck-type cappers. The capper head can be spring operated, with tension controlled by a collar adjustment; or a pneumatic clutch can control it with air pressure; or a barrel cam can be used. On a roller-type presson capper, the cap passes under one (shallow cap) or more (deeper cap) rollers that press the cap on tight.

BIBLIOGRAPHY

1. C. Glenn Davis, “Bottle Closing” *Packaging Machinery Operations*, Vol. 6, Packaging Machinery Manufacturers Institute, Washington, DC, 1981.
2. Lisa M. Wedding, *Canned Foods: Principles of Thermal Process Control, Acidification, and Container Closure Evaluation*, The Food Processors Institute, Washington, DC, 2007.

CARBONATED BEVERAGE PACKAGING

A. L. Griff
Edison Technical Services
Updated by Staff

INTRODUCTION

Carbonated beverages represent the biggest single packaging market, with over 100 billion (10^9) beer and soft-drink containers filled each year in the United States. According to beverage marketing, every person in the United States consumes about 192 gallons of liquid per year. This translates to 3.7 gallons per week or 2 liters/day. Nonalcoholic drinks comprise 87% of the total, and carbonated soft drinks account for 28% of the nonalcoholic types (1). The packages cost substantially more than the contents and are actually the beverage producer’s largest expense item. Performance requirements are quite severe: Because the contents are under pressure, they must hold their carbonation and must withstand summer storage and (for beer) pasteurization temperatures that may reach 55–60°C. Furthermore, the highly competitive nature of this business has brought container design and manufacturing to a highly refined level in order to keep cost to a minimum. Even $0.001 per container becomes big business when multiplied by the billions (10^9) of containers made and used.

PACKAGE TYPES

There are four major categories of carbonated beverage container: plastic bottles, nonreturnable glass, refillable glass, and metal cans.

Plastic Bottles

These are mainly 2-L soft-drink bottles, which first appeared in the mid-1970s and in just a few years took over around one-third of the soft-drink sales volume. The bottles are stretch-blowmolded (see Blow molding) from PET polyester (see Polyesters, thermoplastic). The stretching (orientation) is needed to get maximum tensile strength and gas barrier, which in turn enables bottle weight to be low enough to be economical. Because material cost is about two-thirds of total manufacturing cost, such weight savings are essential. Typical 2-L bottle weights are around 60 g PET, with some as low as 50 g, plus a high-density polyethylene base cup (18–24 g), a label (3 g), and a closure. One design uses no base cup; instead, the bottle itself forms five petal-like feet at the base. It uses slightly more PET (65–70 g), but total weight is less because of the absence of the base cup.

A 3-L PET bottle has been used, with weights around 80–85 g PET plus 22–28 g for the base cup, or around 90 g without the base cup. Although the 3-L may not be as popular as the 2-L bottle in terms of size (too large for most refrigerator-door shelves), it is more economical.

Half-liter PET has been offered since 1979 but has never caught on because it does not provide enough economic incentive to change; and in small sizes, the advantages of safety and light weight are not as significant. Instead of 0.5-L, 16-oz (473-mL), PET is now offered to compete more directly with 16-oz (473-mL) glass and to save a gram or two of bottle weight because of the smaller volume (6% less than the half-liter). Typical bottle weights for these small PET containers are 28–30 g plus a 5-g base cup. Some cupless designs have been developed but have only minor commercial use thus far.

In the deposit-law states, small plastic bottles are more successful because come consumers do not like the handling and return of glass and are unwilling to pay more for metal cans. In these 11 states, however, which represent over 20% of the population, the 2-L PET bottle has been the real winner, because many people prefer to pay one deposit instead of six (see Recycling).

It is believed that an improved plastic barrier to CO_2 loss (see Barrier polymers) would allow lighter (hence cheaper) bottles and thus spark the large-scale use of single-service sizes for soft drinks and also open up the beer market to plastic. Such containers are the object of much development, both in can and bottle forms (see Cans, plastic).

Plastic bottles of all sizes usually carry full wraparound labels, either a shrunk polyolefin sleeve or a glued polypropylene/paper laminate (see Labels and labeling). Some plastic bottles have foamed plastic labels, which have a desirable nonslip feel and offer a little thermal insulation. These used to be very large, extending down over the base cup for maximum advertising effect (Owens-Illinois Label-Lite) but lately have been in conventional wraparound form and size (Owens-Illinois Plasti-Grip).

Nonreturnable Glass

These are mainly 10- or 16-oz (296- or 473-mL) size, with a Plastishield (Owens-Illinois and licensees) foam-plastic protective label or a paper/polyolefin rollfed or an all-plastic shrink sleeve (see Bands, shrink). Typical bottle weights are around 130–140 g and 180–185 g, plus 3–4 g for the label. The glass industry has strongly promoted these containers in competition with metal cans, both in retail markets and in vending machines. Glass has an apparent cost advantage, which carries through to retail level and has managed to hold onto its market share in this size. However, the advantage in container cost is eroded by labels, closures, secondary packaging, filling speeds, and occupied space, plus the possibility of breakage and costs of clean-up. In all of these aspects, cans have an edge.

Prelabeling has become standard. The labels are preprinted and come to the bottler with no need for a further printing operation. Patch labels are cheaper and better for short runs, but are disliked by retailers because the bottles can be turned to obscure the labels.

The old crown closure that had to be pried off has all but disappeared for nonreturnables and is seen only on refillable glass to allow use of bottles with corresponding threadless necks (see Closures). The nonreturnables and even some refillables use roll-on aluminum screw caps on threaded necks, with a tamper-evident ring (see Tamper-evident packaging). The threaded screw-off crowns that are crimped over a fine-threaded neck remain, but in diminishing numbers despite low cost. They are harder to open and are thus used mainly for beer (stronger hands), and their lack of tamper protection has discouraged their use.

The use of plastic closures for both glass and plastic bottles increased in 1984 after a decade of trial use and design refinement. The two most popular designs use a separate liner, but there are linerless designs as well. These closures weigh around 3 g in standard 28-mm size and are slightly more expensive than competitive aluminum roll-ons. All unscrew and fit over the same threads as the roll-ons and have some visible indication of tampering. Initial successes have been with soft drinks; a few have been tried for beer, but they have not been accepted due to their inability to withstand pasteurization.

Refillable Glass

The refillable glass bottle is still used is some markets. O-I Global is the primary supplier of glass bottles to the beer industry and produces returnable beer bottles (3). The main sizes are 16-oz (473-mL) for soft drinks and 12-oz (355-mL) for beer, with some soft drinks also in sizes around a quart. It is usually the cheapest way to buy soft drinks on a unit price basis (except where 2-L bottles are being discounted), but most consumers prefer to pay a little more for convenience. In deposit states, refillables do better but remain a minor factor, after 2-L PET and metal cans. Typical bottle weight is around 300 g for the 16-oz

(473-mL) soft-drink bottle and is 250 g for a 12-oz (355-mL) beer bottle that is used in bars and hotels where economy is foremost and delivery/return is not a problem.

Labels on major-brand soft drink refillables may be permanently silk-screened. Paper/plastic patch labels are used on most refillable beer bottles. Full wraparound labels are seldom seen because the containers are usually sold in six-packs or cases that cover most of the label area.

The economics of refillables is very different from that of other containers, because the bottler must support a "float" of containers and cases (which may cost as much as the containers themselves), as well as a larger fleet of delivery trucks (less compact, must stop to pick up as well as deliver), and the appropriate cleaning and washing machinery. For this reason, soft-drink franchises have been a classic home for local investor/entrepreneurs, and this spirit persists in the soft-drink industry today despite the predominance of nonreturnable packaging.

Refillables are often promoted for their environmental benefits. The concept of refill/reuse may be laudable as it supports a resource conservation ethic, but the actual use of refillables brings its own environmental problems: water pollution from washing, air pollution from less efficient truck usage, and sanitation problems in both shops and homes.

Proponents of nonreturnables also point to the success of aluminum recycling. Opinions and emotions are very strong in these areas, but an impartial examination of the facts leads to no firm conclusion. In fact, much depends on locality—that is, the nature of the water supply, the extent of recycling possible, the degree of urbanization, and the number of trips made by each refillable. There is no easy answer to this question, and neither refillables nor nonreturnables offer a clear advantage on environmental grounds.

Metal Cans

The 12-oz (355-mL) aluminum can with easy-open end is the primary small carbonated-beverage package, despite apparently higher container costs and retail price compared to either glass or plastic (see Cans, aluminum). Container weight and design have been the subject of much development work, with the weight of a modern can now down to around 15 g including the end. There is at least one necked-in ridge at the seam to allow wall-to-wall contact, which helps on the filling lines, makes firm six-packs, and uses smaller, cheaper ends. Double- and triple-necked cans are sold to get even smaller ends, and a new spin-neck design has a conical top section which achieves the same effect.

Nondetachable ends with a ring-like tab to pull, but without the ring coming off to create litter and a safety hazard, have replaced the pull tab almost completely in the United States. Pull tabs are still common in China and the Middle East. Nondetachable rings are mandatory in certain states and are often used in other areas to avoid manufacture and stocking of both types and to present an environmentally supportive image. A reclosable end for a flat-topped can has been announced but is not yet on the open market. Another reclosable metal can had a special polypropylene bottle-sized closure. It was introduced in 1983, but later withdrawn.

Steel cans were much more common than aluminum before the early 1960s, but their use has declined, especially for beer, and the old three-piece can with soldered side seam and separate top and bottom ends is seldom seen any more in this market (see Cans, steel). There are some three-piece cans with welded side seams and even more two-piece steel cans, drawn from steel much as aluminum cans are made (see Cans, fabrication). These may weigh as little as 37 g (with 5 1/2 g aluminum end). Although the steel can is heavier, the material is cheaper and the steel industry had expected to keep more of the beverage market than it did with the two-piece cans. But fabrication is more expensive, coatings are more critical (to prevent rust), and aluminum did a fine job of selling its recyclability on a consumer level. (Steel can be recycled, too, of course, and is easy to separate from solid waste streams by magnets. However, the economics are not favorable, and it does not always pay to get the cans back into the new-material stream, which is what really counts.) Formerly, the need for short runs of preprinted cans for house brands and other low-volume products kept three-piece steel in the running, but the growth of cooperative large-volume canning, improved machinery to coat and print finished cans, and the disappearance of many smaller brands have all contributed to steel's decline.

Approximately 55% of drink cans made in Europe and Asia are steel. It still is the main can material for foods, juices, coffee, and many other products because the internal pressure of carbonated beverages stiffens the filled container and makes steel's great advantage in rigidity of little importance. For the other products, this advantage counts, and it makes aluminum more costly on an equal-performance basis.

Metal Bottles

Coca-Cola has announced that it will bottle some of its products in aluminum bottles in 2008. Coke joins Budweiser and Pepsico in this new cutting edge form of packaging. Aluminum bottles offer enhanced graphic capabiities and the ability to keep the beverage colder. These bottles cost three times more than the ones made of glass. Coke will scale back on the graphics on its bottles. Moutain Dew will present splashy designs created by contemporary artisits. Budweiser is credited for being the first company to offer aluminum bottles in 2005. The aluminum bottles keep the beer at 22°F Glass would expode at this temperature. Sales of beer in aluminum bottles rose 33% in 2007 (4).

BEER VERSUS SOFT DRINKS

Packaging beer into bottles and cans is an immensely expensive process. Packaging must be rapid, ~2000 units per minute, so that large volumes of beer can be broken down to consumer units in a reasonably short time. Second, oxygen must be rigorously excluded. The market for large-size containers such as the 2-L PET bottle is very small for beer, and it will remain so because beer quickly goes stale once the container is opened and exposed to the oxygen in the air. Thus, it must be consumed quickly and cannot be reclosed and finished later, and the large-size market is limited to parties where rapid consumption can be expected. But even at these occasions, there is some preference for cans and small bottles (what one does not drink now, one can drink later). On the other end, there is some competition from kegs and even a plastic sphere that is set in a waterproof carton surrounded with ice. These bulk packages are also used in bars.

Almost all soft-drink cans are actually 12 oz (355 mL) in capacity, as are most beer cans; but some beer is sold in 8-, 10-, and 16-oz (237-, 296-, and 473-mL) sizes, and even a 32-oz (946-mL) size has been used. The nonreturnable glass includes 12 oz (355 mL) and 32 oz (946-mL) for beer and includes 16 oz (473 mL) and 28–32 oz (829–946 mL) for soft drinks. Refillables are 12 oz (355 mL) for beer and are 16 and 32 oz (473- and 946-mL) for soft drinks.

Another addition to both beer and soft-drink marketing was the 12-pack of cans (and bottles), boxed in carry-home secondary packaging and offering an economical compromise between the six-pack and the 24-unit case (see Carriers, beverage). Secondary packaging is an important aspect of beverage packaging, with shrink-film, plastic can-holding rings, paperboard carriers, molded-plastic bottle carriers, and corrugated and molded-plastic cases all vying for their share and making their contribution to the total system price of the primary package.

Plastic containers have entered the huge single-service beer market. These bottles must be able to withstand pasteurization conditions, with a good-enough oxygen barrier to assure desired shelf-life under the most unfavorable storage conditions. The shelf-life problem is made worse by the presence of some oxygen in the beer as brewed and in the headspace of the container. In effect, any oxygen permeability at all puts pressure on the brewing operation to tighten their oxygen-excluding procedures even more. For a high barrier one-trip bottle, people are looking to multilayer or coated bottles to reduce oxygen permeability.

Despite these problems, many companies are working to develop a plastic beer container, because the sheer size of this market gives these efforts a huge potential.

Already 10% of the beer consumed in Europe is in PET bottles. In Korea, the Hite Brewery Company claims that 15% of all beer consumed in South Korea comes in 1.6-L multilayer PET bottles with a shelf life of 26 weeks. In the United States, first steps have been taken by Anheuser Busch and Coors in supplying their beers in 16-oz (453.3-g) multilayer bottles (2). Brewers in Denmark introduced their beer in returnable poly(ethylenea-naphthalene-2,6-dicarboxylate) (PEN) copolymers in 1999, and a 1.25-L beer bottle was offered for sale in Norway. In both countries, there is recycling and bottle return is widely practiced. Plastic beer cans have also been tested in Great Britain. Elsewhere in Europe, PVC bottles have been used at soccer games and institutions where breakage and cleanup are serious problems. In Japan, 2-L and 3-L elaborate beer bottles are made from PET, but they are virtually gift items and far too expensive for any mass market. The Japanese also have small (11.5-oz 340-mL) PET beer bottles on the market on a limited scale.

Beer and soft drinks differ in carbonation content, which affects pressure requirements and rate of CO_2 loss. Pressure is typically expressed in volumes or in g/L of carbon dioxide. One volume equals approximately 2 g/L. At room temperature, each volume produces about one atmosphere (0.1 MPa) of internal pressure, but this changes with temperature, so that a 4-volume beverage such as a cola rises to 7 atmospheres (0.7 MPa) pressure at 100°F (38°C) and to 10 atmospheres (1 MPa) at maximum storage/pasteurization temperatures. The carbonation levels of some common beverages are

	Volumes of CO_2	g/L
Club soda and ginger ale	5	10
Common cola drinks	4	8
Beer	3	6
Citrus and fruit soft drinks	1.5	3

The beer industry differs from the soft-drink industry in still another, very important way: There is no franchise system. In the franchise system, a parent company licenses a large number of local bottlers, who run independent businesses under the supervision of the parent and buy their flavor concentrate from that parent. In the beer industry, on the other hand, there is great concentration, with 90% of the beer made by the top 10 companies. Most of these have some captive container capacity, so that introducing a new container may mean idling of existing capacity and not just a simple cost comparison. The distribution systems also differ greatly. Soft drinks are much more local, and even the big franchises and cooperative canning plants are still regional. Brewers, however, distribute over wider areas, and some ship to more than half the country from a single location. Such distances make container compactness important, discourage breakable glass and less-than-perfect closures, and make refilling (but not recycling) less economical.

DEPOSIT LAWS

No discussion of carbonated beverage packaging would be complete without comment on the deposit laws which are in effect in 11 states and 12 Canadian provinces as of 2008. All beverage containers carry a deposit, typically 5¢ or 10¢. Despite many complaints, the industry and the public have learned to live with such laws, and they argue over the relative merits and troubles that they bring. It is fairly well agreed, however, that the cash value for discarded containers does keep most of them off the highways and gets more of them into the recycle streams. Seven states have reported a reduction of beverage bottle litter by 73–83%. The aluminum-can industry, which has a widely publicized recycle system in operation in both deposit and nondeposit states, now claims that more than 53% of all aluminum beverage cans are recovered in this way. There were some attempts to repeal the deposit laws in a few states, all unsuccessful (5).

On a national scale, in November 2007 Senator E. Markey of Massachusetts proposed a deposit law that would require a refund for certain beverage containers. This was proposed as an amendment to the Solid Waste Disposal Act as the Bottle Recycling Climate Protection Act. It is meant not only to reduce litter, but to protect natural resources through recycling and reduction of solid waste into landfills. This amendment would apply to all of the United States. States with high recycling rates would be exempt.

BIBLIOGRAPHY

A. L. Griff, "Carbonated Beverage Packaging" in *The Wiley Encyclopedia of Packaging Technology*, 1st edition, Wiley & Sons, New York, 1986, pp. 519–522; 2nd edition, 1997, pp. 158–161.

Cited Publications

1. "Fact Sheets," American Beverage Association, Washington, DC, http;//www.ameribev.org, accessed May 2008.
2. A. J. East, "Polyesters, Thermoplastics" in *Kirk–Othmer Encyclopedia of Chemical Technology*, John & Sons, Wiley, Hoboken, NJ, 2006.
3. "North America Beer Markets," O-I Global, www.o-i.com. Accessed May 2008.
4. "Coke, Pepsi, A-B Attracted to Metal," *Brandweek*, December 17, 2007.
5. *Bottle Bill Resource Guide,* Container Recycling Institute, Glastonbury, CT, www.bottlebill.org. Accessed May 2008.

CAREER DEVELOPMENT, PACKAGING

Burton R. Lundquist
Armour Food Company,
Conagra (retired), Cave Creek,
Arizona

Career planning and development should be a lifetime occupation. Without a plan or specific development activities, one's career will tend to drift. There must be a conscious effort to set and achieve goals. Planning and implementation of your plan are probably the most important things you can do to maximize your capability and realize the success you desire. It should be noted that plans should be flexible and should be changed and refined to fit new goals.

One of the most important steps in career development is a career book to document the plan and keep a record of accomplishments. This book should be started as early in the career as possible in order to maintain a complete record of all important accomplishments. Most packaging professionals who have been active for 10 or 20 years have forgotten many of their most important accomplishments. They have no records to show how or what was accomplished. Even recent graduates cannot remember all their important activities. I personally believe that every packaging student should have a career book to keep copies of the results of important projects. There is also an opportunity for packaging directors to give each new employee a career book. I personally required each of my packaging engineers to maintain their book and keep it current. With each annual review they had to present their up-to-date book. There is great satisfaction for everyone in reviewing all that has been accomplished during the year. It should be noted that the career book is a great tool to present your credentials when interviewing for a new job or even for a new position with your current employer.

Your career will span many years and possibly many different jobs and companies. Therefore, you can expect to have more than one volume. Be sure to buy a high-quality book because it must last a lifetime. Have your name embossed in gold, and use plastic inserts to protect your documents and specimens. Some of the most important things to include in your book are your college degree; certificates from continuing education; Institute of Packaging Professionals Certification; copies of patents; awards, letters of recommendation, and congratulations; samples of packages that you developed or were involved with; ads and promotional material for new products with new packages; copies of papers that you presented, publications, proposals, and prototypes of new packages; photographs of projects, co-workers, employees, family members, and so on. Your book is a personal record, so the types of record put in the book may vary with different individuals. The important part is to maintain as complete a record as possible. In addition to the book, the documents may also be scanned and stored electronically in the computer.

BUILDING RELATIONSHIPS

The author has worked as a packaging professional for over 40 years and has learned that it is impossible to make any meaningful accomplishments by working alone. Real accomplishments are made by people working together, and working together builds relationships. Relationships should be built with all the people with whom you interact: your manager, employees, co-workers, suppliers, members of professional organizations, universities and educators, and packaging professionals in other companies, including your competitors. Use these relationships to make things happen. The success of most projects is dependent on using the right people. Use this resource to explore new ideas, help solve problems, identify new contacts and new relationships, organize new projects, implement new systems, and bring projects to a successful conclusion. Relationships are of tremendous value when you network to make a job change. The same networking can be used to identify candidates for a position you may wish to fill. It is the best way to identify speakers for professional seminars, authors to contribute to publications, and candidates for professional organizations. Relationships will bring richness to a career.

Active participation in professional organizations is one of the most important places to build relationships. Professional organizations provide an important opportunity for association with many people who share common interests and goals. Membership is not enough. The maximum benefit is obtained only with active participation. This may be at the national level or at the local chapter level. The Institute of Packaging Professionals (IOPP) is the primary organization for packaging professionals. There are 41 Chapters across the country and 10 Technical Committees. The Packaging Digest lists 138 packaging-related trade and professional organizations. This list includes The Institute of Food Technologists, which has a packaging committee. There are 49 international associations for professionals outside the United States. All of these professional organizations provide the packaging professional to interact and build relationships with other professionals and establish lifelong friendships.

CONTINUING EDUCATION

This is probably the most important part of career development. It is essential for continued growth and expansion of your knowledge base and overall capability. We all start with a base to build on, and how we build and expand on that base determines the extent of growth of our overall capability. Recognizing that packaging technology utilizes many different disciplines, there are many different resources we can use to expand our knowledge and also to learn how to develop new disciplines. Many universities provide continuing education. These may be in the form of night school courses or short courses. Other sources are seminars at Packaging Expositions, Institute of Food Technology and other professional meetings, regularly scheduled seminars by the Institute of Packaging Professionals and other professional organizations, and seminars by suppliers. The professional journals are a source of information on current developments.

Some other types of training that will support career development are public speaking, assertive training, report writing, writing patent disclosures, and learning management skills. An important skill to consider is to learn a second language. Next to English, Spanish is the most commonly used language in the United States. NAFTA will expand the need for people who can speak Spanish.

A development area few professionals have recognized is the need to learn to use the right side of the brain. Most of us primarily use the dominant left side of the brain. Dr. Betty Edwards, in her book *Drawing on the Right Side of the Brain*, states “The left side of the brain analyzes, abstracts, counts, marks time, plans step-by-step procedures, verbalizes, and makes rational statements based on logic. It is said to be more closely linked to thinking, reasoning, and the higher mental functions.” It is recognized that most of our training and education has been directed at the dominant left side. The right side is the creative side. “It uses imagination, the dreamer, the artificer, the artist. Using the right side, we dream and create new combinations of ideas.” Most of the training on the use of the right side of the brain appears to be directed at learning to draw. This does provide a means for self-expression. It is said that learning to use the right side of the brain will release you from stereotypic expression. This release in turn will open the way for you to express your individuality in all aspects of your career. Seek out art training that teaches how to draw using the right side of your brain. If you are lucky, you may find courses in imagination, visualization, perceptual or spatial skills, or inventiveness. The right and left sides of the brain do communicate. You can develop your capability to the maximum when both sides of your brain are working together. There are techniques, such as brainstorming and mindmapping, to stimulate creative thinking and generate ideas, Mind mapping software is also available commercially to create diagrams of relationships between ideas or other pieces of information.

SHARING KNOWLEDGE

Sharing knowledge with others is very important to career development. It provides a means for dialog with your peers about what you have learned, new research and development, unique ideas and patent disclosures, and areas you want to explore. Sharing leads to better organization and understanding of ideas. Sharing is also an important part of learning. If we don’t share with others, we do nothing to expand the information base. Take every opportunity to share through publications and presentations at professional meetings, by participating in IOPP and other groups such as the American Society of Testing and Methods (ASTM) and Technical Association of Pulp and Paper. You can be one of the continuing education resources for new professionals starting their career. This sharing will provide another opportunity to build relationships.

MANAGER’S RESPONSIBILITY

Managers and supervisors have a special responsibility to assist their staff in developing their career to the maximum of their capability. They need to be involved with career books, helping their staffs build professional relationships, and providing opportunities for continuing education and sharing. They should support programs that will help all aspects of career development. In many cases the supervisor is the key to the entire career development process.

BIBLIOGRAPHY

General References

B. Edwards, *Drawing on the Right Side of the Brain*, Putnam Publishing Group, New York, 1989.

T. Buzan, *The Ultimate Book of Mind Maps*, HarperCollins Publishers, New York, 2006.

A. F. Osborn, *Applied Imagination: Principles and Procedures of Creative Problem Solving*, 3rd edition, Charles Scribner’s Sons, New York, 1963.

D. MacCrimmon MacKay, *Behind the Eye*, Basil Blackwell, Cambridge, MA, 1991.

Institute of Packaging Professionals, 481 Carlisle, Herndon, VA 22070.

Institute of Food Technology, 221 N. LaSalle Street, Chicago, IL 60601.

American Society of Testing and Methods, 1916 Race Street, Philadelphia, PA 19103.

Technical Association of Pulp and Paper, P.O. 105113, Atlanta, GA 30348.

CARRIERS, BEVERAGE

Octavio Orta
Coated Board Systems Group,
Riverwood International
Corporation,
Atlanta, Georgia
Updated by Staff

INTRODUCTION

Beverage carriers have traditionally been designed to group primary beverage containers into retail units of sale, as well as to protect the primary containers and merchandise or market the liquid contained.

The grouping function is important, because it must securely provide easy portability of a plurality of single cans, bottles, cups, tubs, or paperboard containers of beverages in units of sale that meet the needs of consumers. Typically, multiples of 4, 6, 8, 10, or 12 are commonly found; but larger multiples of 15, 18, 20, 24, 30, and even 36 have grown in popularity.

The protection function has developed to mean protection to the primary container against breakage, leakage, denting or disfigurement; protection to the beverage as in the case of providing a barrier against ultraviolet-ray degradation of beer; and protection to the consumer against personal injury from accidents while carrying or using the package.

The merchandising or marketing function has also evolved because of the development of brand proliferation and flavor segmentation in all beverages. The introduction of "new-age beverages," teas, microbrewed beers, and so on, established a need for the secondary package to establish brand identity, have on the shelf point-of-purchase appeal, establish differentiation among brands and flavors, and evoke media advertising.

The beverage carrier also provides a means of displaying retail unit Universal Product Codes (UPCs) reading through modern laser scan checkout machines while masking UPCs from the individual primary containers.

As beverages have been formulated to appeal to different tastes, primary containers have changed, and so have beverage carriers. The following have resulted in an evolution of the various types of carriers used as beverage secondary packages: metal cans with thinner wall thicknesses; glass bottles with thinner wall thicknesses; poly(ethylene terephthalate) (PET) and other plastic bottles in various sizes and shapes; plastic tubs, cups, and containers of various configurations; and paperboard "boxes" of various sizes and shapes.

CAN MULTIPACKS

Several different raw materials are used in the multiple packaging of cans. Since over 55% of beverages in the United States are sold in cans, these various multipacks are the most commonly purchased today.

Plastic Ring Carriers

The Hi-Cone (Illinois Tool Works) plastic ring carrier is still widely used to package beverage and food cans into 4 s, 6 s, 8 s, and other multiples. This carrier consists of a series of plastic rings that carry cans by the rim and grips them throughout the distribution and retail cycles. The rings are equipped with cutout "finger holes" for gripping and have tearout strips in order to access the cans themselves. These rings are applied by a machine furnished by Illinois Tool Works and applied in line at the canning line between the filler and the palletizers (see Figure 1).

Paperboard Carriers

Paperboard carriers for cans are used in two different varieties, the wraps and the fully enclosed sleeves. In the United States, fully enclosed sleeves are used for the majority of the can multipacks. Sold in 12, 15, 18, 24, 30, and even 36 multipacks, the popularity of these has grown significantly. Originally sold in 3×4 up to 4×6 can configurations, these carriers have recently developed to be double layered stacks of cans with an interstitial pad between the cans. Thus, multiples of $2 \times 3 \times 4$, $2 \times 3 \times 5$, and $2 \times 3 \times 6$ have been growing as a percent of the total retailed cans (see Figure 2).

Typically, these fully enclosed sleeve packs are formed from a preglued sleeve of paperboard that is then removed from a magazine in a packaging machine, and collated single or double layers of cans are packed inside these sleeves in a parallel and continuous motion at speeds of

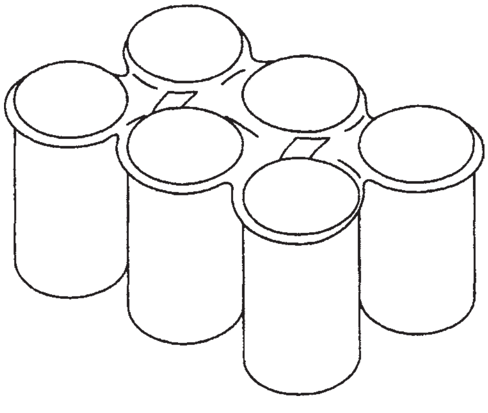

Figure 1. Plastic ring carriers.

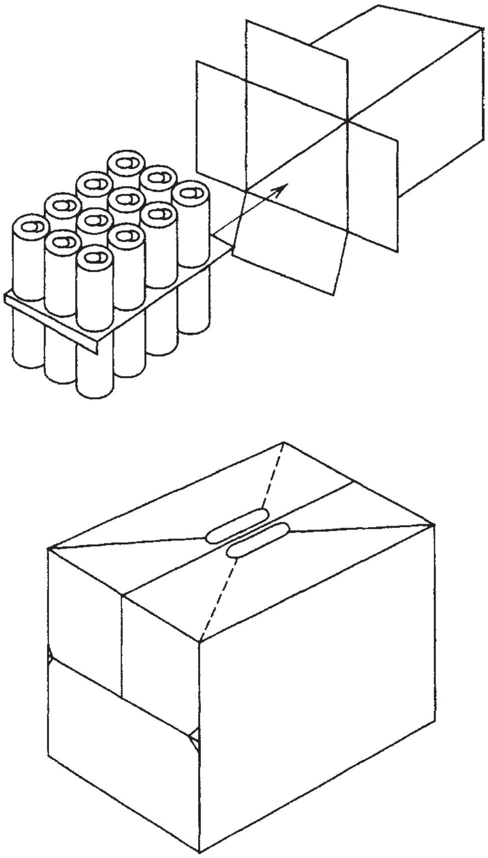

Figure 2. Paperboard carriers.

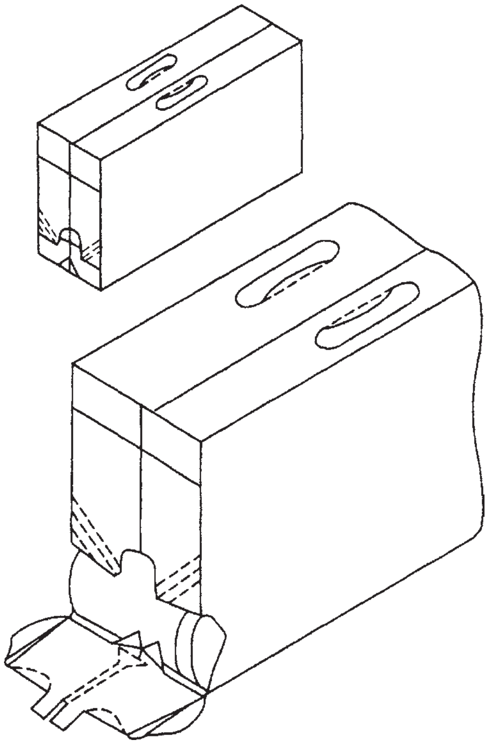

Figure 3. Fully enclosed sleeve packs.

≤3000 cans per minute. The ends of the sleeves are then folded and glued or locked in place (see Figure 3).

While the fully enclosed sleeves are the most popular form of secondary packaging for beverage cans in the United States, can wraps continue to be popular in Europe, Asia, and other parts of the world. Paperboard can wraps are printed and die-cut blanks of paperboard, which are removed from a magazine in a packaging machine, brought over the cans in line and in continuous motion; then the side wing panels are folded down, the bottom flaps are folded in, and the cartons are locked or glued in line (see Figure 4)(1).

Both the fully enclosed sleeves and the can wraps are formed principally from paperboard formulated with 70–80% virgin fiber and 20–30% recycled fiber and containing high resistance against wet tear.

The most common machinery used for forming fully enclosed sleeves is supplied by Riverwood International, The Mead Westvaco Corporation, and R. A. Jones Company, while the majority of the wet-strength carrierboard used in manufacturing these packages is supplied by Riverwood International and/or The Mead Westvaco Corporation.

Other forms of can multipackaging are (a) paperboard "clips," which grip the rims of cans, holding them by this rim through distribution and retail, and (b) shrink film, utilizing thermoplastic films that shrink around the cans with the application of heat. Both of these forms of can multipackaging have been tried in applications in the United States, but have not been able to sustain measurable shares of the total can packaging market segment (see Figure 5).

BOTTLE MULTIPLE PACKAGING

Basket-style carriers are a popular form of multipackaging nonreturnable or one-way glass bottles (and for some returnables), especially in smaller multiples such as 4, 6, or 8 packs, and particularly in premium brands. Basket-style carriers have also been chosen by the Coca-Cola Company to package their proprietary PET contour-shaped bottle with special die-cut designs registered to make their design proprietary to the Coca Cola Company. Thus, the popularity of basket-style carriers continues regardless of whether they are used to package returnable or nonreturnable glass bottles or to package plastic bottles (see Figure 6).

Basket-style carriers traditionally are die-cut and preglued from virgin or recycled paperboard, and all provide cells for each bottle, sides and ends that are attractively printed for merchandising and brand identification, and a central handle panel that rises above the necks of the bottles and provides for convenient and easy portability. Riverwood International, Mead Westvaco Packaging, International Paper, and Zumbiel are the primary suppliers of these carriers.

Outside the United States, nonreturnable bottles are more commonly multipacked in paperboard wraparound carriers, which, similar to can wraps, are formed, wrapped,

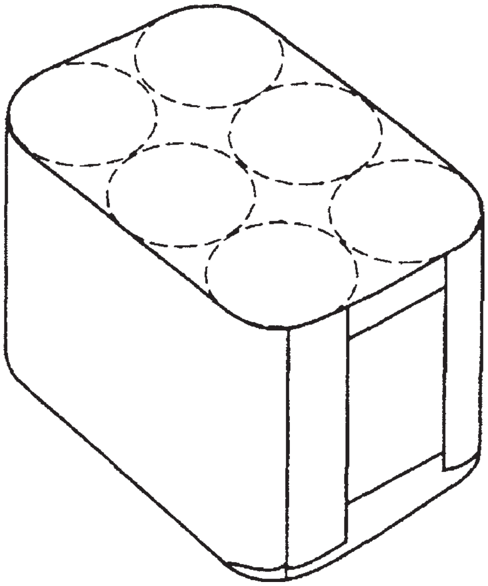

Figure 4. Can wrap.

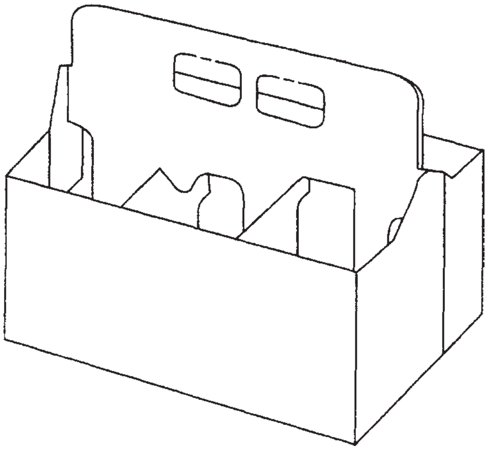

Figure 6. Bottle basket.

and glued or locked in place by in-line wrap machines. These wraps, most commonly used to form 4-, 6-, and 8-packs, are applied by in-line machines supplied by various companies such as Riverwood International, The Mead Corporation, and Certipak, a division of Kliklok.

Plastic bottles are also multipacked in plastic rings supplied by Illinois Tool Works. In the case of bottles, the rings fit snugly around the middle portion of the bottles and provide a handle protruding from one side in order to carry the bottles. These rings commonly form 6 or 8 packs of bottles.

Other forms of multipackaging nonreturnable bottles appear in the form of clips that grip the bottles by the neck or under the crowns and provide a handle with which to carry the bottles (see Figure 7).

These clips are commonly used in countries of the European Union (EU), where the concern for environmental wastes has driven retailers and consumers alike to seek minimal packaging while offering portability and some merchandising possibilities. Clips can be formed from virgin paperboard and are also available in plastic.

Finally, for larger multiples of glass bottles, the fully enclosed paperboard sleeve is still the most widely utilized multipack, particularly in the brewing industry. In this package, the preglued sleeve, die-cut from wet-tear-strength board, is applied in-line and in a continuous motion by a packaging machine in an operation similar to the can fully enclosed package machines previously described. Operating at speeds of up to 1800 bottles per minute, these machines can operate with or without inserts that provide separations between the bottles.

These fully enclosed packs are commonly used for premium brand product and serve as an ultraviolet-ray

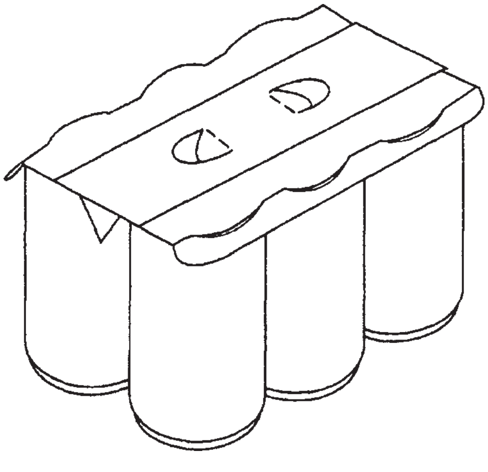

Figure 5. Paperboard clips.

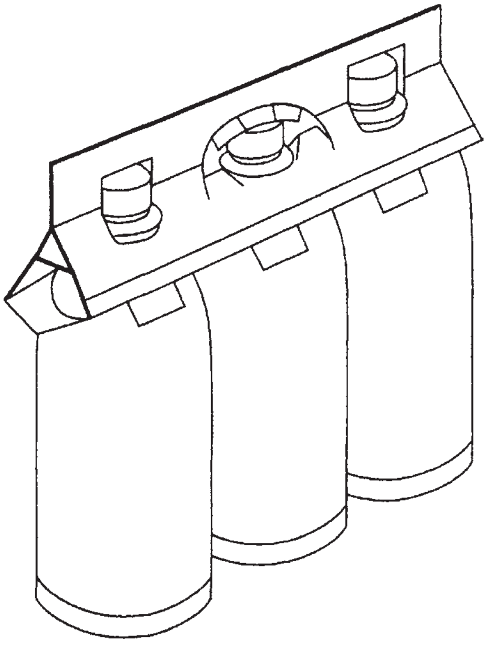

Figure 7. Bottle grips.

barrier to the product as well as a merchandiser on the retail shelf.

New Designs

All of the manufacturers of beverage carriers claim that they can make custom carriers for their clients. Award-winning designs have recently come from the Mead Westvaco Packaging. The “IcePak” is a carrier that holds ice and melted ice in the form of an end load sleeve so that it could be loaded with automated equipment. The bottom flap is interconnected to the side and bottom flap to form a water seal. Top flaps and gusset form a chimney. Cooled natural Kraft provides wet strength without additional coating. The “Bottle Master” is a three-bottle carrier with unique positioning so no glass to glass contact occurs. The bottle package was designed to run on existing gluers with minimal make ready. It ships flat and easily pops open, locks open, and loads bottles. The “Bottle Master with Crown Design” is a regular carrier with a cut-out crown image. It was designed for Anheuser-Busch and ensures zero impact on operations and runs on exisitng equipment. The “Fridgemaster has duo strap handles added to the standard 12-can refrigerator pack (2).

BIBLIOGRAPHY

O. Orta, “Carriers, Beverage” in A. J. Brody and K. S. Marsh, eds., *Wiley Encyclopedia of Packaging Technology,* 2nd edition, John Wiley & Sons, New York, 1997, pp. 168–170.

Cited Publications

1. M. J. Kirwan, “Folding Cartons” in M. J. Kirwan, ed., *Paper and Paperboard Packaging Technology,* Blackwell Publishing Ltd., London, 2005.
2. Paperboard Packaging Council, www.w.packagedesignmag.com, 2008.

CARTONING MACHINERY, TOP-LOAD

C. R. Kuhr
Kliklok Corporation
Decatur, Georgia

Top-load cartoning employs flat paperboard blanks that have been die cut by a carton manufacturer [see Figure 1(**a,b**)] to produce specific shapes and sizes when formed or folded into finished trays or hinge-cover packages. This style generally includes no pregluing by the carton converter, so flat blanks can be stacked directly on a pallet and shipped without secondary shipping cases. Hence, top-load cartons are economical. They also allow product placement through an opening on the largest panel of the carton, which can greatly simplify the loading operation (see the Machinery, cartoning, end-load; Cartons, folding articles).

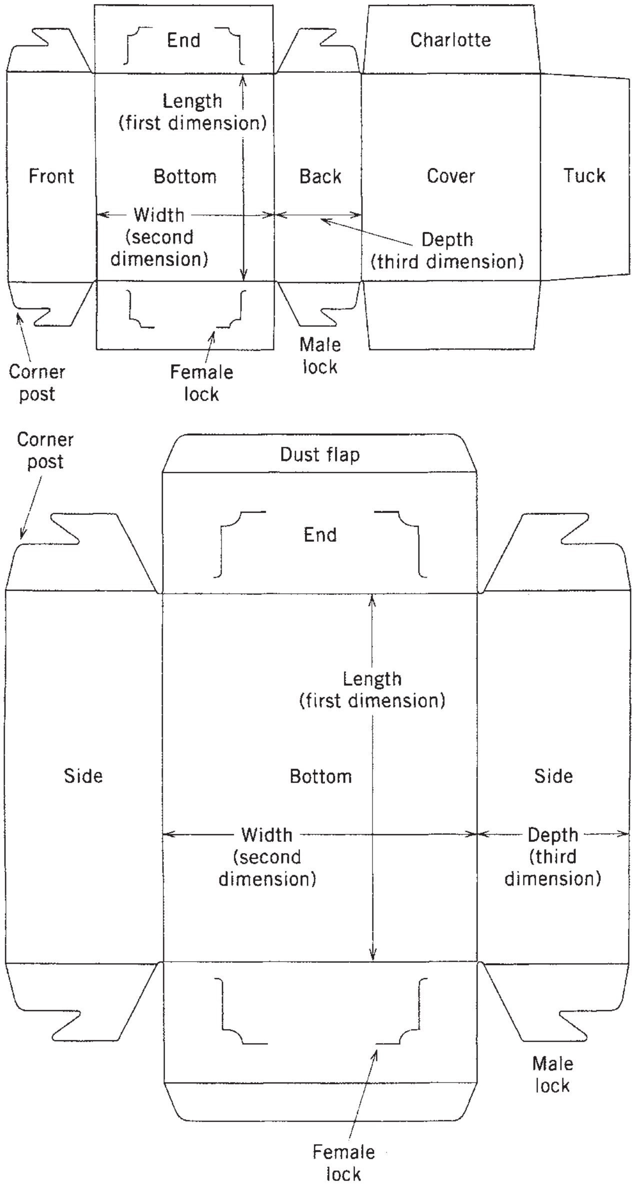

Figure 1. Diagrams of typical (**a**) hinge-cover carton and components and (**b**) dust-flap-style paperboard tray.

CARTON FORMING

The heart of any top-load packaging operation is the carton-forming machine [see Figure 2(**a,b**)]. Although various configurations exist, the most common is a vertical system that provides overhanging delivery to outfeed conveyors or packing conveyors. Generally, these forming systems incorporate an inclined, gravity-advance magazine or powered horizontal hopper from which individual die-cut blanks are fed. Carton blanks are retained by small projections or tabs that extend slightly from the sides of a gate frame at the front of the magazine. Vacuum cups, mounted on a reciprocating feed bar, pull the individual carton blanks from the magazine and transport them in a downward arc. As vacuum is released, they are deposited in a registered position on top of a forming

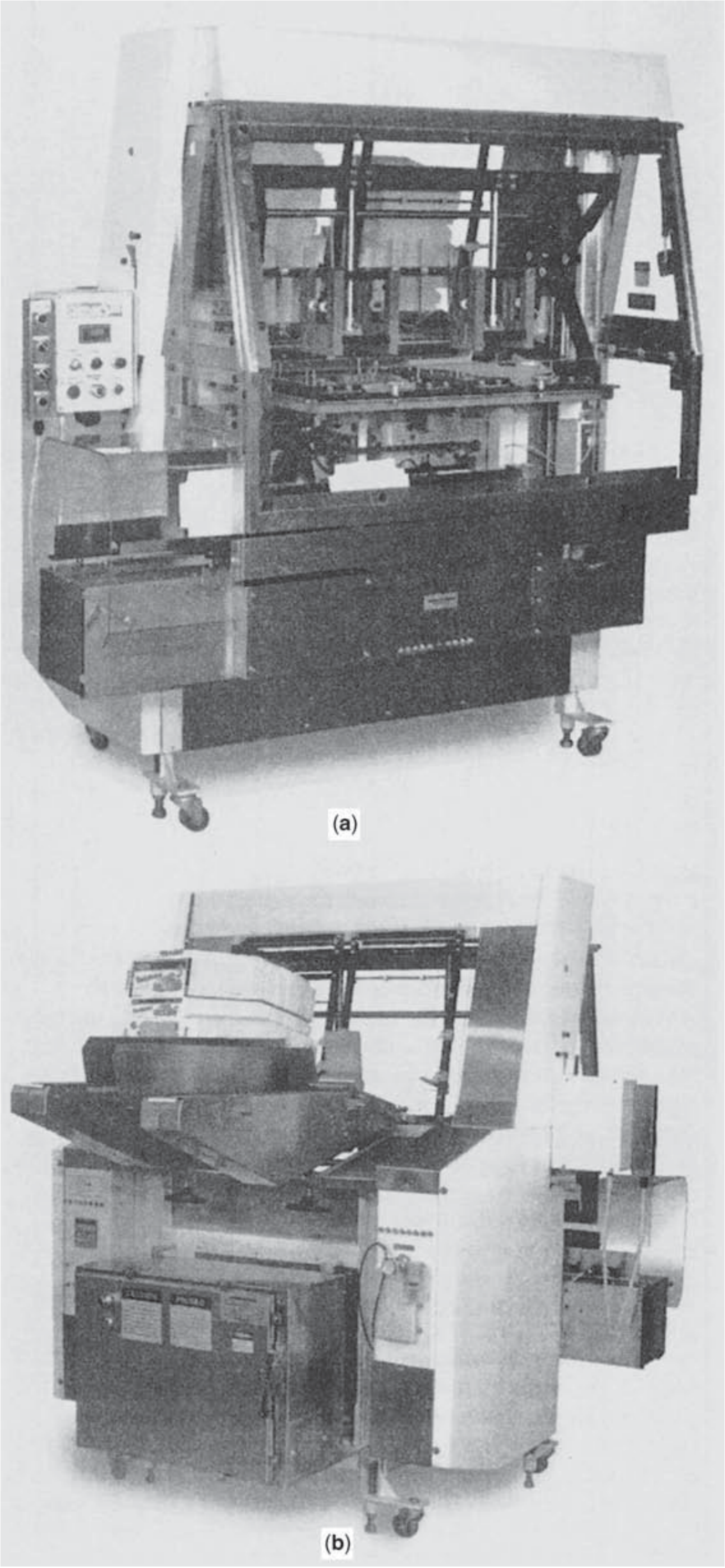

Figure 2. (**a**) Top-load carton forming machine with double-forming head; (**b**) rear of carton forming machine with powered carton hopper.

cavity. The carton blank is rotated from vertical to a horizontal plane during this feed cycle, with the vacuum cups contacting its inside surface. As the feed bar moves upward to feed the next blank, a plunger or mandrel moves downward to force the blank through the forming cavity (see Figure 3). The plunger is designed so that the carton body conforms to its shape. The carton is folded, guided, and manipulated by a series of metal or composite plastic fingers and plows installed within the forming cavity. As the plunger completes each forming stroke

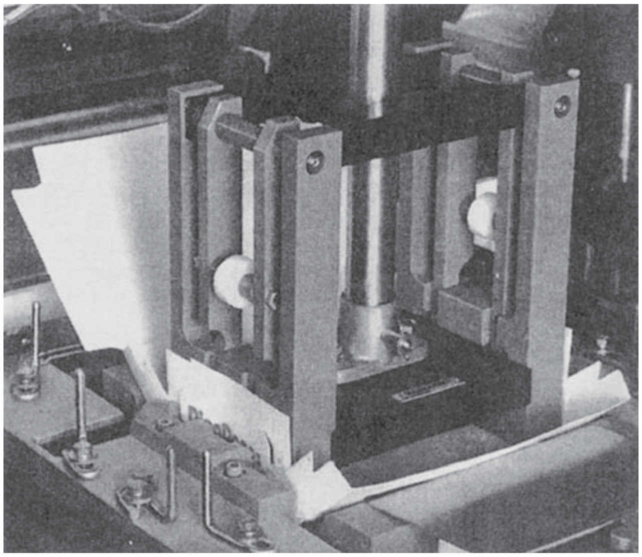

Figure 3. Lock-style carton forming head.

and begins moving upward, spring-loaded mechanical traps retain the carton and strip it or remove it from the plunger. In some cases, special carton coatings, shapes, or speeds dictate the use of a timed air blast system to positively eject the carton onto takeaway conveyors.

A wide range of carton sizes can be accommodated in styles ranging from simple rectangular corner-lock trays to a myriad of special shapes such as triangles, hexagons, octagons, and complex hollow-wall or shadow-box structures. The key to top-load carton forming lies in the special tooling that is designed and manufactured for each carton size and style. This removable tooling is commonly referred to as *a forming head*. It can be a relatively simple device or a complicated unit requiring various cams and actuation for flap folding and manipulation of the paperboard panels. The forming head consists of (a) the forming cavity, (b) a plunger or mandrel, and (c) various components for the hopper or magazine. By interchanging this tooling on any given forming machine, it can erect different carton styles, shapes, and sizes within a specified size range. For standard designs such as simple trays or hinge-cover cartons, the tooling can generally be changed in 10–15 min. In many cases, a multiple-head configuration is employed to erect several cartons with each forming stroke and increase the output of cartons per minute. Depending on the size of the package to be formed, machines may accommodate double, triple, or even quadruple forming heads. The carton body can be formed using locks, adhesive, or heat sealing.

LOCK FORMING

Dozens of different lock designs are available for forming trays and cartons to meet various packaging requirements. Most often, the lock design consists of a vertical and/or horizontal slit in the upright panels or walls of the carton body through which a specially shaped corner post or tab is inserted during the forming operation (see Figure 4). The opening of the die-cut slits in the vertical walls and folding and insertion of the locking tabs are accomplished using specially designed and fabricated fingers or guides that are an integral part of the forming cavity. Normally, a mechanical actuation is also incorporated in the plunger to pull in the locking limb and ensure positive engagement.

GLUE FORMING

Glue forming of flat die-cut paperboard blanks can be accomplished using either hot-melt or cold-vinyl adhesives (see the Adhesives article). Hot-melt adhesive is generally applied in one of two ways. The simplest method employs open heated reservoirs mounted in the machine directly below the forming cavity to melt and contain the adhesive. This is commonly referred to as an “open pot” system. Applicator blades are mounted on a shaft that runs across the top of each reservoir. As the carton blank is placed on top of the forming cavity, the shaft is mechanically actuated and the blades rise upward from within the adhesive. They apply a series of dots or lines of adhesive to the underside of a flap or corner post located in each corner of the carton blank. As the carton is plunged through the forming cavity, these flaps are folded inside the vertical walls of the carton. Spring-loaded rollers in the cavity

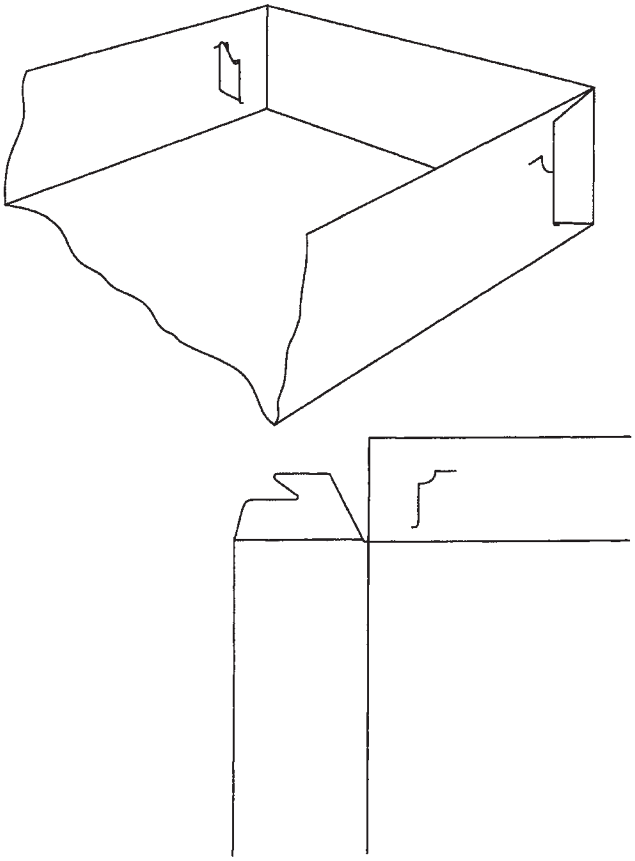

Figure 4. Common stripper-lock design: (**a**) assembled; (**b**) unfolded.

provide compression using the plunger inside the carton for backup. This technique compresses the adhesive and dissipates heat to allow quick bonding for reasonably high forming speeds.

The other commonly used method of hot-melt glue forming employs an enclosed, pressurized system where adhesive is supplied through heated hoses to guns or nozzles that spray a pattern on the inside of the carton's vertical body panels. Depending on the size of the carton and the pattern desired, this may be performed by first feeding cartons onto a short section of horizontal conveyor and applying adhesive as they are shuttled into position on top of the forming cavity. This avoids the need to mount necessary feed hoses and nozzles within the constraints of the forming cavity. It also allows greater pattern flexibility, and fewer nozzles can be used to apply glue to opposing corners of the carton as it travels beneath them. In other cases, where only simple glue patterns are required, applicator nozzles may be permanently fixed at each corner of the carton above the cavity. After adhesive is applied, the blanks are plunged vertically through the cavity and compressed in the manner described above.

Cold-vinyl carton forming was virtually eliminated with the advent of hot-melt adhesives because of the extended compression times required for setup. Carton styles were generally limited to specific compatible designs, such as outward tapered trays, which could be nested for extended compression times after the package was discharged from the forming machine. However, recent developments in applicator technology and new end-use markets have created a renewed interest in this forming method. Today, it is frequently used to produce paperboard scoops, boats, and clamshells for the fast-food and food-service industries, as it suits their requirement for economical, preformed packages with a bonding medium that is not sensitive to heat. This heat resistance has also led to applications in connection with "ovenable" cartons. In the forming operation, a carton blank is fed from the magazine and deposited on top of a forming cavity. Specially designed adhesive application nozzles are mounted on the forming cavity and are then mechanically actuated to deposit small dots of cold-vinyl adhesive on the inside of the carton blank. Adhesive is supplied under pressure from a single remote tank. A plunger forces the blank through the forming cavity and, in this case, deposits the formed trays into a nest or stack to keep them under pressure until the adhesive has set. This method allows forming at speeds of up to ~80 strokes per minute or more than 300 cartons per minute with multiple heads to satisfy the substantial production volumes required by the fast-food industry.

HEAT-SEAL FORMING

Heat-seal forming uses special coatings or preapplied hot-melt adhesives on the paperboard as a bonding medium in the carton-forming operation. Overall board coatings that can be heat-seal formed include single-side polyethylene, double-side polyethylene, polyester, and polypropylene. Special pattern-applied hot-melt adhesive coatings, placed only in the area to be bonded, can also be used. The heat-seal system is designed to force air through electrically heated quartz elements into specially designed nozzles on the forming cavity. Depending on the carton coating, air temperatures that range from 400 to 800°F (200–425°C) are directed over specific areas of the carton blank, where the coating on the paperboard stock is melted or activated. The carton blank is plunged through the forming cavity, and the board coating serves to bond the appropriate carton flaps. High speeds—up to a maximum of ~90 strokes per minute—can be achieved, depending on variables such as coating thickness, carton size, and carton style. Heat-seal forming operations require some degree of cooling to prevent heat buildup in various parts of the forming head and to accelerate carton compression times. Water or special refrigerants are plumbed to various components within the forming cavity and plunger. The extent of cooling generally depends on the bonding medium used, but it becomes most extensive when double-polyethylene coatings are involved. Heat-seal forming is employed most often in the frozen-food industry, where thermoplastic coatings are otherwise included for moisture-barrier protection, graphic enhancement, or a degree of leak resistance necessitated by wet products.

TOP-LOAD FORMING CAPABILITIES

Various carton forming machine models are produced, each designed for a given size range and speed rating. The same basic machine chassis can usually be modified with special attachments and equipped as a dedicated lock, glue, or heat-seal system. As indicated, machines can be equipped with double, triple, or quadruple heads to feed and form multiple carton blanks simultaneously. Forming speeds generally range from 20 to 120 strokes per minute, and with multiple forming heads, a single machine can produce more than 300 cartons per minute.

CARTON CONVEYING

After forming, the top-load carton is typically carried on a conveyor for loading either manually or automatically. For slow- to moderate-speed hand packing, simple flat-belt or plastic tabletop chain conveyors are frequently employed and offer the most economical approach. One end of the conveyor is generally placed below the forming cavity and is independently driven with no electrical or mechanical connection between the conveyor and the forming machine. After forming, trays or cartons drop onto the conveyor and are carried downstream for product loading. The alternative to this method is a conveyor with chain flights or lugs (see Figure 5). Generally, flighted conveyors are either attached to and mechanically driven by the forming machine or electronically synchronized through the use of intelligently controlled independent drive motors. Flighted conveyors offer the advantage of packing the operators, because they cannot individually retard cartons for loading as they can on a flat belt. Flighted systems are required to achieve adequate carton control in any

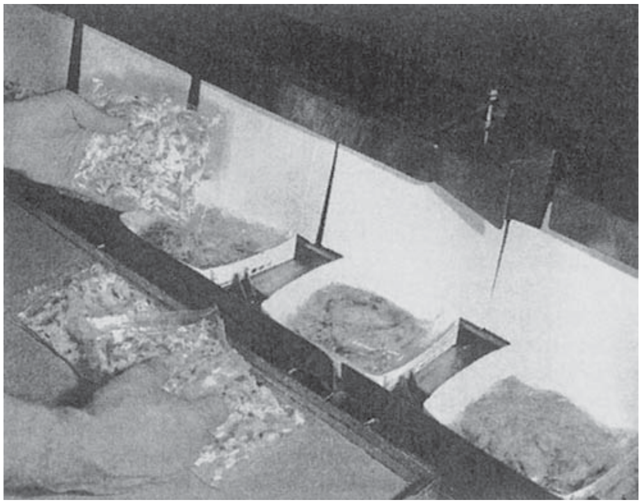

Figure 5. Flighted carton packing conveyor, hand packing.

high-speed operation. They also allow the carton cover to be controlled during the packing operation by either maintaining a vertical position or folding it back almost 180° to permit loading from either side of the conveyor. Packing conveyors should be designed so that the bottom of the carton is approximately 30–34 in. (76–86 cm) from the floor. This helps optimize the efficiency of operators who are placing product into the cartons by hand.

MANUAL PRODUCT LOADING

For hand-pack operations, product can be presented to the operator in many different ways. These range from tote bins to product conveyors running up to the carton conveyor. The most efficient method involves bringing the product in on a flat belt or tabletop chain that runs parallel and adjacent to carton flow. The bottom of the product should be elevated just slightly above the top of the carton to allow for simple sweep loading into the largest opening of the carton. This is the most efficient and reliable method of hand packing.

AUTOMATIC PRODUCT LOADING

The automatic loading of products into top-load cartons can be accomplished using many different standard and or highly customized systems. Free-flowing products, such as individually quick-frozen vegetables, are often filled automatically using a volumetric system that is integrated mechanically or electronically with the carton conveying system. Where netweight filling is desirable, a variety of different systems can be employed. These are normally interlocked electrically with the carton forming and conveying system to sense the presence of a formed carton and to signal the scales to dump. For net weighing or automatic loading of some products into top-load cartons, the carton conveyor must sometimes operate on an intermittent-motion basis. This allows the carton to stop or dwell momentarily beneath a filling device, providing sufficient time to completely load the product charge. Alternatively, special traveling or reciprocating-funnel systems can be incorporated at the point of product loading to allow continuous motion. The top or throat of the funnel is designed to provide a continuous open target beneath the filler discharge while the bottom aligns and travels in synchronization with the carton on the conveyor.

Many products are loaded into top-load cartons by count, in a specific pattern. These range from things such as spark plugs or hardware items to bare frozen hamburger or potato patties. Many other products such as wrapped candy, pouched mixes, boil-in-bag items, overwrapped baked goods, healthcare and pharmaceutical items, office supplies, tobacco products, and all types of frozen foods have been automatically loaded into top-load cartons. The loading technique depends on the product and can vary from a simple mechanical shuttle to advanced units that automatically align, accumulate, group, and transfer product into the carton. Characteristics and consistency in the product's weight, size, shape, texture, temperature, and surface traits all have significant influence on the method of automatic loading. The transfer of such products is most frequently accomplished using a high-volume, low-pressure vacuum pickup system (see Figure 6). A reciprocating-vacuum manifold transports items into the carton after they have been previously organized into required patterns. In some instances, advanced robotics, incorporating sophisticated vision

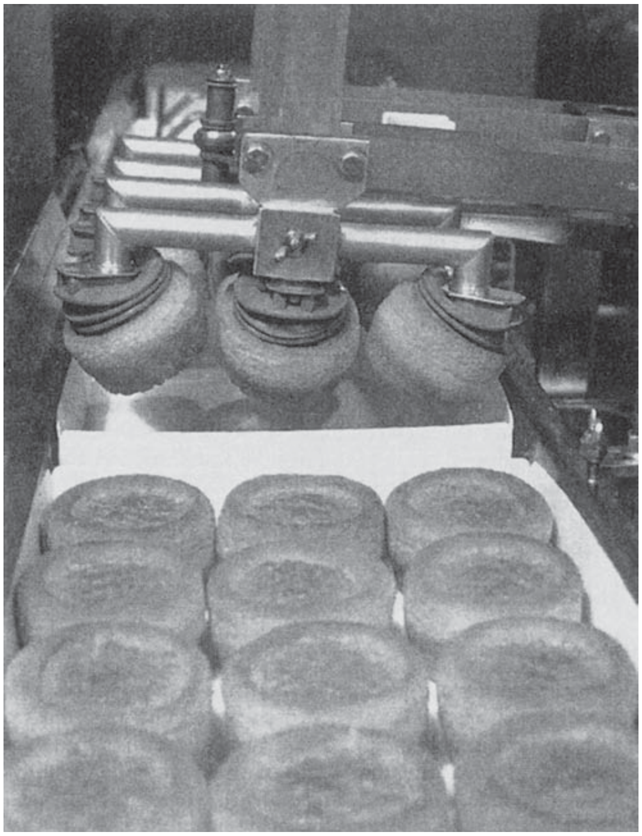

Figure 6. Automatic product loading, vacuum transfer.

systems, are used to locate product from a randomly positioned supply and automatically transfer it into cartons.

CARTON CLOSING

When hinge-cover or self-cover designs are used in any topload cartoning application, the method of carton closing becomes a final major consideration. General categories of carton closers include flighted or lugless models. On flighted systems, actuation and sealing functions are timed according to predefined spacing between conveyor flights. On lugless systems, intelligently controlled motors and other functions react to the presence and position of a carton as it is photosensed on conveyor belts. In broad terms, flighted systems generally provide a higher degree of carton control, whereas lugless systems offer greater speed, flexibility, and ease of maintenance. For slow to moderately high-speed flighted operations, the closing machine is usually an independent unit with its own drive motor. It is equipped with a special infeed assembly that accepts cartons at random from an upstream packing conveyor and automatically times them into the flights of the closing machine. When flighted systems are required to operate at high speeds (>200 cartons per minute), it is desirable to eliminate the infeed section and drive the entire packaging line from the carton forming machine. This "line-driven" method requires the use of flighted packing conveyor and ensures that positive carton control is maintained throughout. The need to retime cartons into the closer at high speeds is eliminated.

Lugless systems are, inherently, independent as opposed to line-driven. Cartons are received at random and conveyed with sequential belts that have special surface traction characteristics. Both overhead and underlying conveyor belts may be employed to maximize control. Each sequence of the operation is powered by its own individual, intelligently controlled drive motor, so speeds and relationships between various machine functions can be readily adjusted through program controls. This allows a much greater degree of flexibility and finetuning without the need for physical changeover and tool adjustments.

DUST-FLAP-STYLE CLOSURE

Dust-flap-style cartons require closure of only a single tuck panel. As such, they can be closed on a straight-line operation where it is unnecessary to turn or rotate the carton. A static plow folds down the leading dust flap while a rotating paddle or wheel assembly, timed to the carton-conveying chain, serves to "kick" the trailing dust flap forward. After this has taken place, the cover is plowed down using guide rods, belts, or rollers. As the cover is plowed down, the front tuck score is prebroken in preparation for final closure. Dust-flap-style cartons can be closed either by inserting and locking the front tuck inside the body of the carton, or, by applying hot-melt adhesive to the inner surface of the tuck and adhering it to the outside of the carton's front panel.

TRIPLE-SEAL-STYLE CLOSURE

The hinge-cover carton design most frequently used is the triple-seal ("tri-seal") style, which is also called the "three-flap" or "charlotte" style. For this carton style, three primary closer designs are available: vertical, right angle, and straight line. For slow-to-moderate-speed operations, where space is a limiting factor, a compact machine design consists of an intermittent motion unit with vertical carton compression. Cartons are indexed by shuttling them at a right angle into a single hot-melt adhesive application station. Adhesive is applied to all three carton cover flaps simultaneously.

This type of closer generally uses an open-reservoir style of application system, with blades rising from within the adhesive to apply solid lines or dots of adhesive as required. It can also be equipped with gun- or nozzle-style applicators that spray adhesive onto the carton flaps. After adhesive application, the entire carton is elevated vertically through a compression tunnel that folds down all three flaps and discharges finished cartons at the top of the machine.

For most applications, tri-seal cartons are closed using either right-angle or straight-line machine configurations. In the right-angle operation (see Figure 7), the carton is indexed into the closer, the front tuck is sealed to the carton body, and the carton is shuttled through a 90° change of direction for sealing the charlottes or end flaps. With the straight-line closer design (see Figure 8), the carton body is rotated or turned 90° after closure of the front tuck, as it continues to travel in a straight line. This positions the charlottes parallel to the line of travel to facilitate application of adhesive or hot-air sealing and subsequent compression. To achieve proper registration between the cover and the carton body, it is best to fold down and trap the trailing charlotte before front-tuck closure. This is generally executed with an overhead, rotating tucker paddle. This paddle is positioned above a chain transfer area, where a new set of lugs then traps the trailing charlotte against the rear of the carton and holds

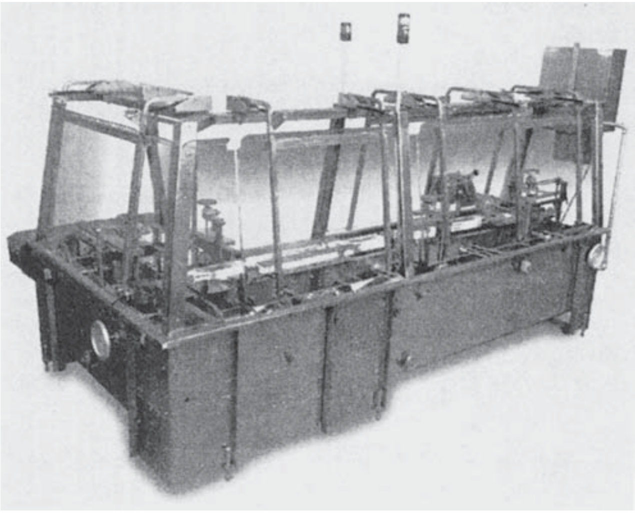

Figure 7. Right-angle top-load carton closer.

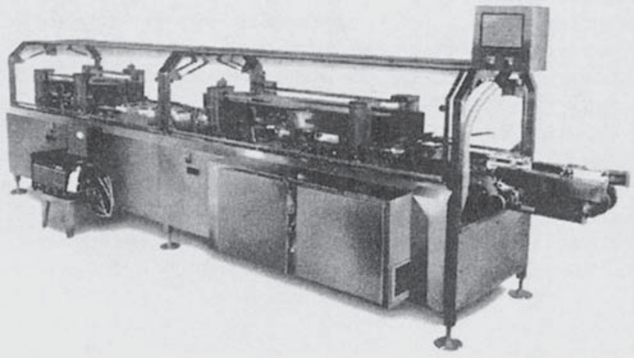

Figure 8. Straight-line lugless top-load carton closer.

it in position through the front-tuck closing section. On lugless systems, the speed of overhead belts can simply be adjusted in relation to the carton-carrying belts in order to precisely position the cover.

LOCK CLOSURE

Closure of tri-seal cartons can be accomplished using locks, adhesive, or heat sealing. Lock closure is effected by using specially designed plows, guides, and tucking fingers and is employed most often in the frozen-vegetable industry for plain-paperboard shells that are later overwrapped with printed paper.

ADHESIVE CLOSURE

Adhesive closure can be accomplished with either hotmelt or cold-vinyl adhesives. Hot melt is most frequently employed, and the adhesive is commonly applied using either open-pot or enclosed, pressurized nozzle systems. Depending on the glue pattern required, a thin wheel or cluster of wheels can be used to apply adhesive from an open reservoir to the carton flaps. When special patterns are desired, intaglio-wheels or nozzle-type applicators supplied by a remote tank generally offer greater flexibility.

Historically, cold-vinyl adhesive found little application in on-line closing operations because of extended compression times required for setup. Recently, however, interest has been prompted by the requirement for ovenable paperboard packaging, where most hot-melts are unsuitable because they tend to soften and release during cooking. As a result, systems have been developed for polyester-coated ovenable board stocks. These systems apply a finely atomized spray of cold-vinyl adhesive, which is followed by the application of electrically generated hot air in a manner similar to that used for heat sealing. The hot air accelerates the water evaporation process and allows use of carton compression sections that are comparable in length to those of hot-melt systems. Sufficiently high production speeds (~150 cartons per minute) are achieved. This system has been used with polyester-coated paperboards for dual-oven applications, where the product is intended for preparation in either microwave or conventional ovens. Among the various thermoplastic polymers used for carton coatings, polyester is generally the only one considered suitable for dual-oven use because of its high-temperature compatibility and limited heat solubility. By the same token, these characteristics necessitate high temperatures and extreme compression when the coating is used as a heat-sealing medium to bond the carton. Although the coating can be used for carton forming, where a plunger inside the carton provides necessary backup for compression, it is not practical for conventional heat-seal closure because only limited compression can be applied against the hollow package.

HEAT-SEAL CLOSURE

Heat-seal closure can be used for cartons that include thermoplastic coatings, heat-sealable wax coatings (see the Waxes article), or preapplied hot-melt adhesives. Here again, the board coating or sealing medium is activated using electrically generated hot air at high temperatures. The package then proceeds through compression to bond the flaps as the coating solidifies. For wax-coated cartons, the compression section must consist of refrigerated bars to prevent smearing of the wax. This method also results in quick bonding of the paperboard flaps, within a relatively short compression section.

OPTIONAL FUNCTIONS

Top-load cartoning systems can be equipped with a wide variety of options, including many types of coding devices, leaflet feeders, labelers, sensors, and computers to facilitate effective control and management of the entire packaging system.

CARTONS, FOLDING

Paul Obolewicz
Rand Whitney Packaging,
West Chester, Pennsylvania
Updated by Staff

INTRODUCTION

Folding cartons are containers made from sheets of paperboard (see Paperboard) that have been cut and creased for forming into a designed shape. They comprise a significant proportion of the packaging found in the retail sector. Cartons meet packaging needs cost-effectively by providing product protection and information, visual impact, and convenience appropriate for the product concerned and its method of distrbution and consumer use (1).

There is evidence that paper was used by Egyptian merchants to wrap goods for their customers as early as

1035 A.D. The modern-day folding-carton industry began in 1839 when Colonel Andrew Dennison began producing commercial folding cartons to complement and protect jewelry sold in his retail store. By the mid-1890s, automatic machines were in widespread use for the production of cartons (2).

Merchandise displays at supermarkets and drug, hardware, automotive, and department stores demonstrate the extent to which folding cartons are used today. Cereal, crackers, facial tissue, detergent, dry mixes, frozen food, ice cream, butter, bacon, bar soap, candy, cosmetics, toys, cigarettes, canned beverages, carryout foods, and pharmaceuticals represent the broad range of products for which folding cartons are commonly utilized. The use of folding cartons is widespread because of the ability of this packaging format to satisfy the functions of protection, utility, and motivation. Protection from crushing, bending, contamination, sifting, grease, moisture, and tampering can all be built into folding cartons. For the producer, utility is achieved through high-speed automatic packing (see Cartoning machinery). For the end-user or consumer, utility is provided by opening, reclosing, and dispensing features. In some cases, the carton even serves as the cooking utensil. High-quality graphic reproduction, excellent billboard presentation of the graphics design, and the ability to take on unique and varied shapes provide the carton user with the means to motivate the consumer to purchase products packaged in folding cartons.

PAPERBOARD SELECTION

Successfully meeting the needs of a folding-carton user begins with choosing the paperboard best suited for the job. In general, this means selecting the grade with the lowest cost per unit area that is capable of satisfying the performance requirements of the specific application. Economics and performance dictate careful selection of paperboard grades for each use.

Selection Criteria

A variety of criteria are commonly used in the selection of paperboard grades. The Technical Association of the Pulp and Paper Industry (TAPPI) has published standardized test methods for many of these criteria (3) (see Testing, packaging materials). TAPPI Standard Methods are widely used and accepted by the industry. The most important and widely used criteria are shown below.

FDA/USDA Compliance. This is a nondiscretionary criterion for food products and is dependent on the type of food and the type of contact anticipated between the food and the paperboard or coatings on the paperboard.

Color. Color is typically chosen for marketing reasons. The side of the paperboard that becomes the outside of the carton is generally white, but the degree of whiteness varies among grades. Depending on the materials-selection and processing strategies of suppliers, outside board color can be blue-white or cream-white. These shades are noticeably different and can limit substitution of grades. Board color on the inside of cartons varies from white to gray to brown.

Physical Characteristics. It is possible to establish minimum levels for each carton application that allow the package to satisfactorily withstand the rigors of packaging machinery, shipping, distribution, and use by the consumer. Physical properties commonly used to predict suitability of board for a given use include stiffness, tear strength, compressive strength, plybond strength, burst strength, tensile strength, elongation, and tensile energy absorption. Physical criteria normally define the basis weight and thickness of paperboard that is used to produce a carton.

Printing Characteristics. Following the selection of a specific graphic design and printing method for the carton, a paperboard is selected based on these criteria: smoothness; coating strength; ink and varnish gloss; mottle resistance; and ink receptivity. Not all criteria are important for every printing technique.

Barrier. The most common barrier requirements are for cartons to provide protection against moisture and grease. The choice of a barrier material and application method influences board choice. For example, if polyethylene (PE) is to be applied to the carton, a board with a treatment that holds the PE on the board surface can have economic and processing advantages over an untreated board. Materials and application methods are described below.

Paperboard Types

In the United States, the three most widely used types of paperboard are identified as follows:

Coated Solid Bleached Sulfate (*SBS*). 100% virgin, bleached, chemical furnish, clay-coated for printability.

Coated Solid Unbleached Sulfate (*SUS*). 100% virgin, unbleached, chemical furnish, clay-coated for printability.

Coated Recycled. Multiple layers of recycled fibers from a variety of sources, clay-coated for printability.

Coated recycled boards are the most widely used. Other types include folding box board (FBB) and white lined chipboard (WCC).

Overall treatments or coatings are applied to webs of paperboard to provide specific functions. Clay-based coatings to provide high-quality printing surfaces are the most common treatment applied on the paperboard machine. Grease-resistant fluorochemicals are applied on board machines as well, either as furnish additives, surface treatments, additives to clay coatings, or in combination. Mold-inhibiting chemicals are also applied to boards designed for bar-soap packaging, to prevent moisture in the product from initiating mold growth. Surface treatments applied on other-than-board production equipment are discussed below under Carton Manufacturing Processes.

Paperboard is the overwhelming choice as the substrate for folding cartons. However, a segment has developed that utilizes plastic sheet as a substrate. These cartons are normally produced from clear, impact grades of PVC sheet (see Film, rigid PVC) using specialized heated-scoring techniques to achieve acceptable folding characteristics. Unique product visibility is the primary reason for the use of this more costly substrate for specialty folding-carton applications, such as cosmetics and soft goods (see Boxes, rigid plastic).

Another segment making an impact on the folding carton market is E-flute, and the newer F-flute is corrugated. E-flute is a transitional medium between corrugated and folding cartons. While E-flute height, depending on the profile of the manufacturing ranges within 43/1000 and 5/1000 in. F-flute, is typically ~30/1000 in. The fluted material has positive attributes for its stacking strength, low weight, and stiffness, as well as for its insulating and shock-absorbing properties. It is used typically in cartons for products such as perfumes, glassware, household products, candies, fast foods, and countertop displays.

CARTON STYLES

As the demand for cartons grew, so did demands for additional features. These demands catalyzed the development of new and unique ways to cut and fold sheets of paperboard to produce cartons. The records of the U.S. Patent and Trademark Office contain many thousands of patents granted to protect folding-carton structures.

Three broad classifications are commonly used to categorize folding-carton styles: tube (end load); tray (top load); and special construction. Figure 1 describes accepted terminology for the various parts of tube (**a**) and tray (**b**) cartons (4), as well as the order in which dimensions are listed in carton specifications. Compliance with these standards prevents confusion.

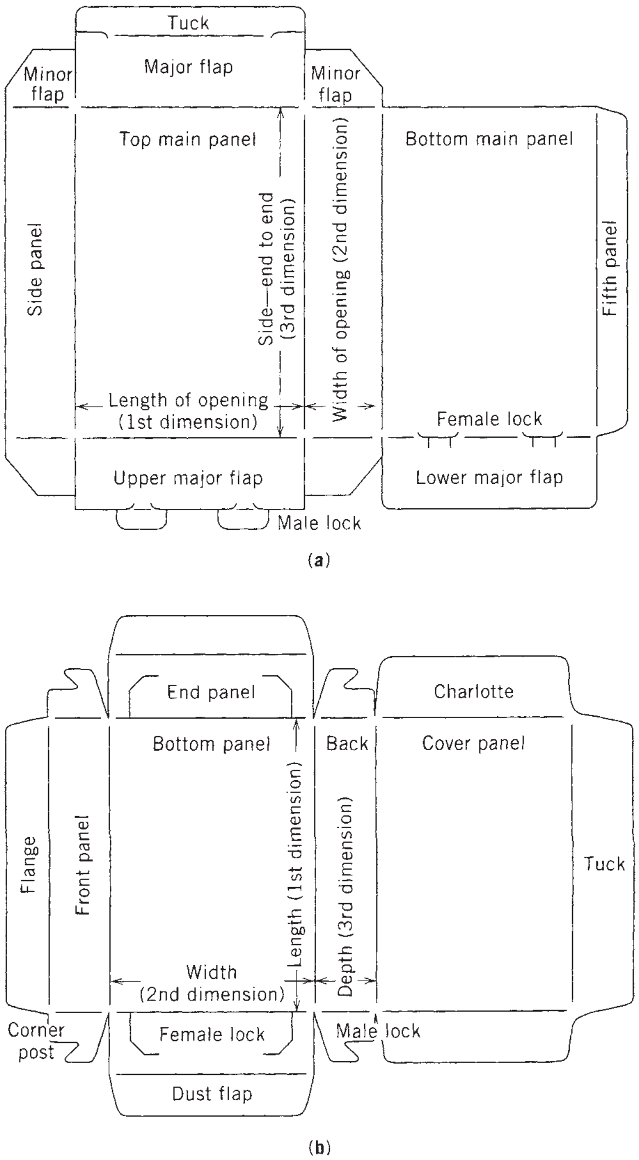

Figure 1. Terminology.

Tube Style

Tube (shell) constructions are the most common style in use today. Figure 2 shows a typical sealed-end carton in various stages of production and filling. These cartons are characterized by a fifth panel glue seam in the depth direction, yielding a side-seamed shell that folds flat for transportation. The cross section of the carton opening is normally rectangular, and product may be loaded either horizontally or vertically (see Cartoning machinery). Tube-style cartons are well-suited for very high speed automated filling lines, but they are also used for manual filling applications.

Figure 3 shows the treatment of end flaps on a tuck-end carton. Other end treatments are in common use, including zippers and similar opening features for sealed-end cartons. Internal shelves and panels are often included to secure and protect the product. This is particularly done when the product is irregular in shape or the carton is much larger than the product for improved graphic presentation or shoplifting deterrence. When heavy granular products are packaged, bulging of main panels can be a problem. The use of bridges connecting the two main panels increases the carton's integrity required to resist bulbing. These bridges can be made from paperboard and attached during the gluing operation.

Tube-style cartons are commonly used for granular or pourable solid products such as detergent, cereal, and dry mixes. Dispensing features are often designed by special cuts and creases in the paperboard. End opening is preferred when inner bags are employed (see Bag-in-box, dry product). Large products packed one to a carton, such as pizzas, frozen dinners, pot pies, cosmetics, and pharmaceuticals, are packed in end-opening tube-style cartons. End-loaded cartons are also designed for opening and product removal through the main panel; a cream cheese carton is a good example of this approach. Gabletop milk cartons also fall into the tube or shell category (see Cartons, gabletop). They incorporate liquid-tight sealing

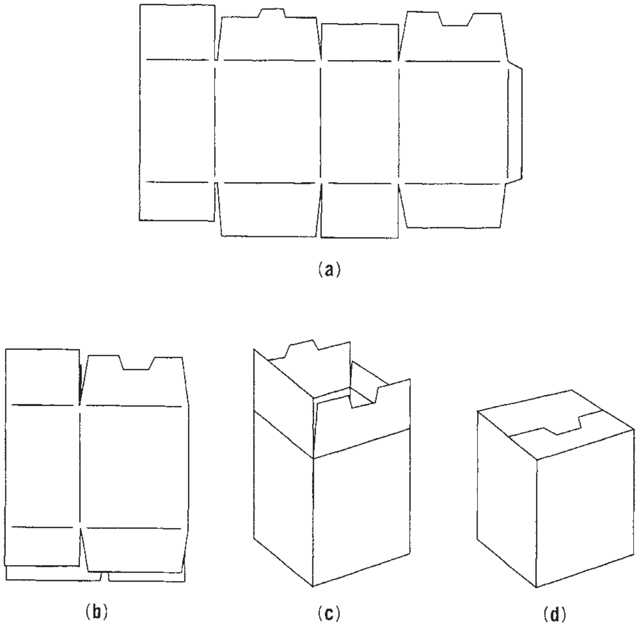

Figure 2. Sealed-end carton: (**a**) blank; (**b**) side-seamed shell; (**c**) carton erected for loading; (**d**) filled and sealed carton.

and a reclosable pour spout. From ice cream to lipstick, tube-style cartons satisfy many diverse packaging needs.

Tray Style

Tray or top-load cartons are characterized by a solid bottom panel opposite the product-loading opening. As shown in Figure 1**b**, panels are connected to each edge of that bottom panel. Tray cartons are especially useful for manual or automatic loading of multiple products. Figure 4 contains schematic drawings of a tray carton blank, the carton setup for loading, and the completely closed and sealed carton. In this example, the front and back panels are connected to the end panels using mechanical locks. Panels are also commonly connected using adhesives or heat sealing (see Adhesives; Sealing, heat).

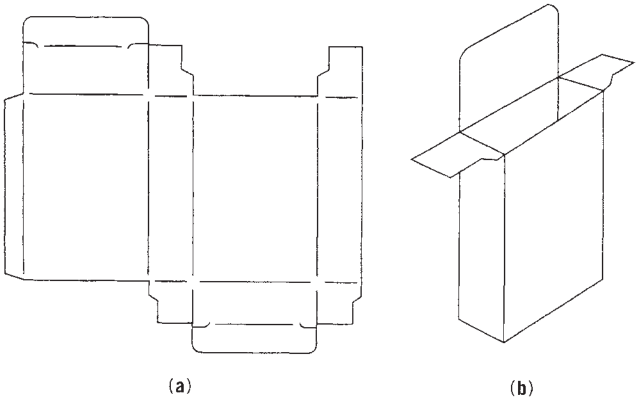

Figure 3. Tuck-end carton: (**a**) blank; (**b**) erected carton for loading.

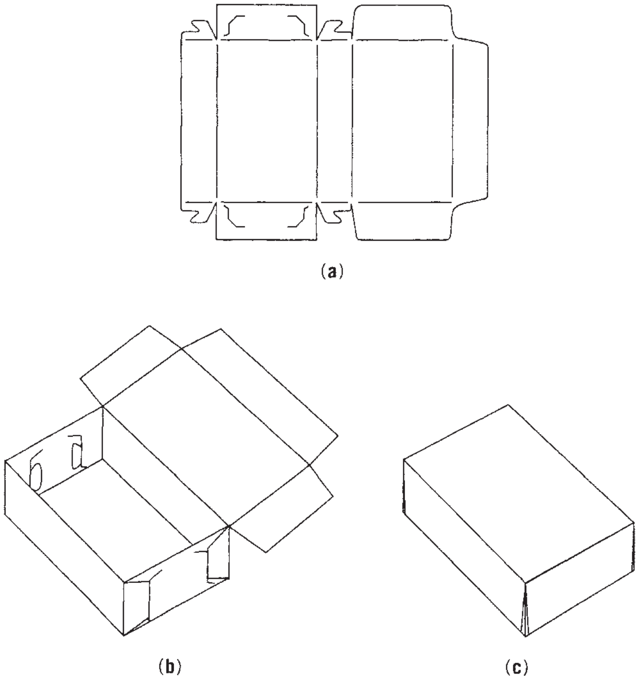

Figure 4. Locked corner hinge cover carton: (**a**) blank; (**b**) carton; (**c**) tuck-end carton.

Where additional resistance to leakage is desired, web corners are employed. Figure 5 shows a web-corner tray with folded double sidewalls that provide finished sidewall edges. A similar, slightly larger tray could be used to cover the tray following product loading, yielding an extremely crush-resistant package. Figure 6 shows a six-corner

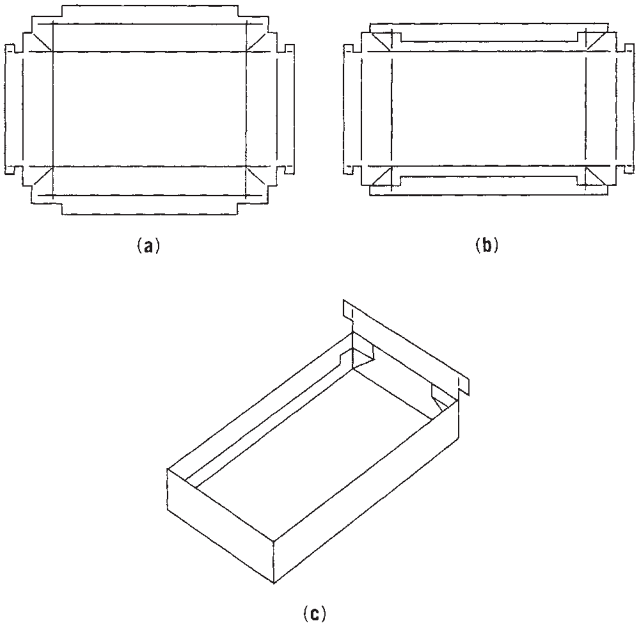

Figure 5. Web-corner tray: (**a**) blank; (**b**) sidewalls glued; (**c**) final panel folding.

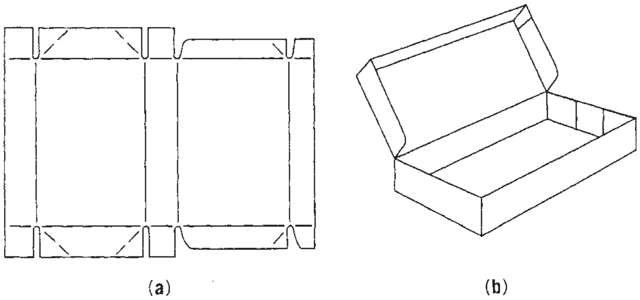

Figure 6. Six-corner carton: (**a**) blank; (**b**) carton erected for loading.

carton that can easily be set up by hand. Diagonal scores permit the tray to be glued and delivered in a collapsed form. Web corners could be incorporated with additional modifications.

Tray cartons that require no gluing at the point of use (e.g., the six-corner carton of Figure 6) are used extensively for manual loading. The cake, pie, or pastry carton employed by the local bakery is the best example of the utility of these designs. Garments and other dry goods are often packed, especially when purchased as gifts, using two-piece cartons that comprise two collapsible glued trays. Tray cartons are also widely used for products that can be automatically packaged. Doughnuts and fish sticks are examples of products commonly packaged in tray-style cartons with attached covers. Cartons similar to that shown in Figure 4 are used for products of this type. Most display cartons for smaller candy packages also fall into the tray category.

Special Construction

Special construction is a classification employed for cartons that do not fit tray or tube descriptions, or that represent sufficient departures from normal tray or tube practice. A blister package that employs a combination of heat-seal-coated paperboard and a clear thermoformed plastic blister is a good example of a special construction (see Carded packaging). The automatic-bottom carton shown in Figure 7 combines elements of a side-seamed tube carton with those of a top-load carton and requires no manipulation to form the carton bottom. When the collapsed shell is opened, the bottom panels lock into place. This carton is used extensively for fastfood carryout packaging. It is also popular for hardware items.

The bottle-wrap carton in Figure 8 is an example of the many wraparound carrier cartons used for multipacks of bottles, cans, or plastic tubs (see Carriers, beverage). These cartons are either locked or glued after being wrapped around the primary packages.

The tube, tray, and special carton styles depicted and described here are broadly representative of the great variety in shapes and sizes produced by the folding-carton industry. Customization of design for function or appearance is a significant advantage of folding cartons.

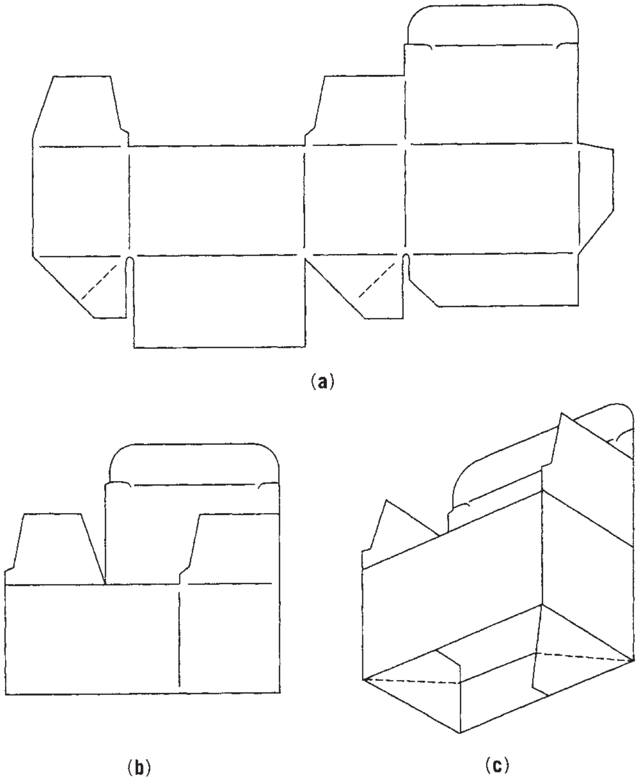

Figure 7. Automatic-bottom carton: (**a**) blank; (**b**) carton glued for shipping; (**c**) bottom view of erected carton.

CARTON MANUFACTURING PROCESSES

After a paperboard grade has been selected for a specific carton style and use, a variety of manufacturing options are available for converting that board into cartons. Although it is a highly unusual carton that requires each one of the steps or stages described below, all are commonly employed to produce folding cartons in today's market.

Extrusion Coating

This technique involves the coating of one or both sides of the paperboard web with a relatively thin (generally less than 0.001-in. (25.4-μm)) layer of a thermoplastic polymer (see Extrusion coating). Low-density polyethylene (LDPE) is the most commonly used extrusion coating for folding cartons and provides a cost-effective means of obtaining excellent protection against water resistance as well as a fairly good water-vapor barrier. LDPE is also used as a heat sealant (see Sealing, heat), particularly when two-side coatings are employed. When the use temperature of the package exceeds 150°F (65°C), HDPE or PP can be used to raise the acceptable use temperature to 250°F (121°C). These two polymers also provide improved grease resistance. Coating board with PET can raise the use temperature to over 400°F (204°C), suitable for most "dual-ovenable" applications. Coextrusion, in which back-to-back layers of two plastics are laid onto paperboard,

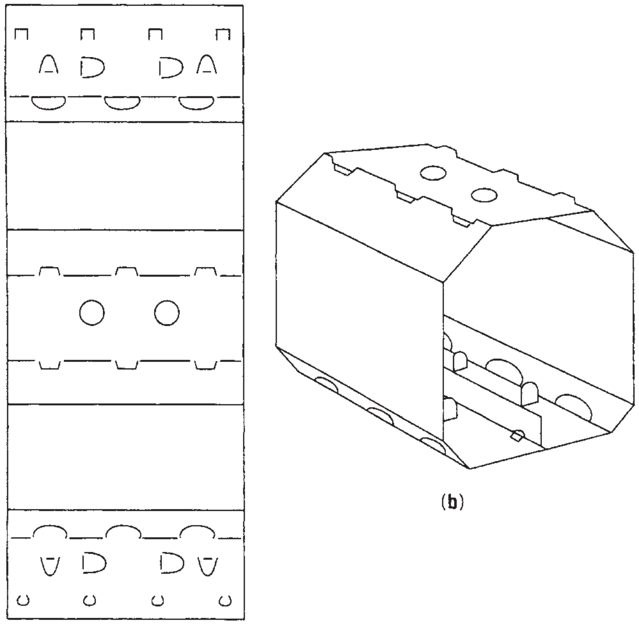

Figure 8. Bottle wrap carton: (**a**) blank; (**b**) erected carton. (Bottles omitted for clarity.)

makes it possible to take advantage of the special properties of some exotic plastics, such as nylon, that by themselves will not adhere to paperboard.

Laminating

The earliest means of significantly enhancing the properties of paperboard was the combination with other materials through lamination (see Laminating). The most commonly used laminating adhesives are water-based glues (see Adhesives), or thermoplastic polymers. Materials laminated to paperboard include high-quality printing paper for enhanced graphics capabilities (see Paper), grease- or water-resistant paper for improved barrier, aluminum foil for barrier or aesthetics (see Foil, aluminum), and film (sometimes metallized) for barrier or aesthetics (see Metallizing).

Printing

Prior to the printing operation, paperboard is handled in web form. A decision must be made to continue in web form or convert the web to sheets before printing and die cutting. This choice is primarily dictated by the printing technique chosen (see Printing). Sheeting is most often done at the carton-producer's facility. A small segment of the industry purchases board sheeted at the paperboard mill.

The main processes for carton printing today are offset lithography, flexography, and gravure. Letterpress and silk screen are used to a limited extent. The most recently introduced process, digital printing, can be used for short print runs and for customizing packaging in already premade bulk. Printing involves solid print, text, illustrations, and diagrammatic representatios. Brand positioning can have a major influence on the printing design. Functional needs have to be taken in to account. Products that retain ink odors require special attention in choice of inks and printing methods. Products that are packed hot may need rub-resistant print surfaces (1).

With respect to quality of reproduction, there is overlap in what can be achieved today with the various printing processes. Gravure was considered best for solids, whereas offset lithio was considered best for halftones. Today, offset gravure and conventional gravure with eletrostatic assist may improve gravue halftone reproduction. In the past, offset lithio would be used to print a design on a box of chocolates and the rest of the printing would be done by sheet-fed gravure. This was necessary to prevent the occurrence of residual odors that would be retained from the lithio ink and would be a hazard to chocolate. Today, there is a wide choice of offset lithio ink and drying systems that assist drying. Today, presses are fitted with coating units that can apply UV-cured varnishes that are water clear, have high gloss, and are rub-resistant.

It is still true that cylinders are relatively more expensive for gravure than plates for lithio and flexo, but they are longer-lasting and therefore competitive when longer runs are required.

Silk screen printing has always been known for its ability to print thick films of ink. UV systems can be used in silk screening, and this has the advantage of rapid ink drying. A range of special effects is possible and incliude raised images, such as Braille, warning symbols, highly opaque prints, and high-luster varnish and textured finishes (5).

Cutting and Creasing

Following the printing operation, individual cartons are cut from webs or large sheets and creased or scored along desired folding lines. Reciprocating flat-bed or platen cutting is almost invariably used to cut and crease sheets printed by offset lithography. In this technique, an accurately positioned array of steel cutting knives and scoring rules (see Figure 9) is pressed against a printed sheet of paperboard. The knives penetrate through the paperboard to cut out the pattern of the carton. Rules force the board to deform into channels in the counter plate, producing controlled lines of weakness (scores) along which the board will later predictably bend or fold. Alternatively, scores can be produced by cutting partially through the paperboard or by alternating uncut segments with completely cut-through segments.

In years past, knives and rules were separated and held in place by hand-cut blocks of dimensionally stable hardwood plywood. Hundreds of individual blocks were required for dies incorporating 10 or more carton positions. Greater accuracy and consistency as well as substantially reduced die preparation time is being used today through the use of computer-controlled laser die cutters. The laser beam is used to cut slots in large sheets of the same special plywood. Knives and rules are cut and bent automatically or manually and placed by hand into the slots. Crease or score quality has been improved

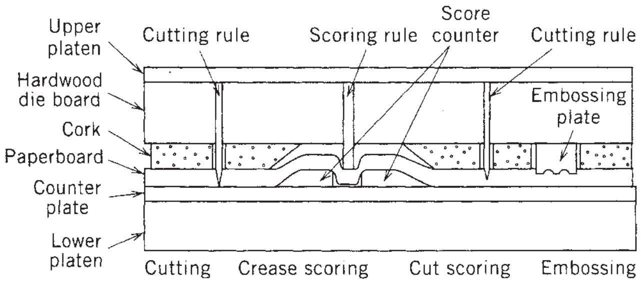

Figure 9. Flat-bed cutting-die schematic.

through the use of computer-controlled counter-plate machining and accurate pin-registration systems.

Transport of printed sheets in a sheet-fed platen cutter is accomplished with mechanical grippers that hold the leading edge of the sheet. Small nicks in the cutting knives result in uncut areas that keep the full sheets intact and permit transport from the cutting and creasing station to the stacking station. Large stacks are then removed from the machine; and unwanted pieces of board, called broke, are stripped from the cut edges of the cartons, yielding stacks of printed carton blanks. Newer sheet-fed platen cutters incorporate automatic stripping of broke between the cutting and stacking stations. Platen cutters are also employed to cut and crease paperboard printed in web form. In the past, these cutters were often placed out of line from normally faster-running presses. Speed increases permit economical in-line placement, which is common today.

Rotary cutting and creasing offers the advantage of higher speeds than reciprocating platen cutting, but at greater cutting die cost. Matched machined cylinders used for fixed carton sizes are most often placed in-line with printing operations. Both electrical discharge and mechanical machining are used to produce the knives, rules, and score channels in these matched cylinders.

Rotary cutting dies have also been developed for sheet and web cutting and creasing that are produced by pattern chemical etching of thin metal plates. Cutting and creasing patterns are coated with chemical-resistant materials, and chemicals are used to reduce the thickness of the plate in the unprotected areas, resulting in raised rules. Creases are formed by pushing the paperboard with the rule of one plate into a channel formed between two rules of the second plate, a configuration quite analogous to that of platen creasing. Cutting, however, is quite different; cutting rules on opposing plates are offset slightly from each other. As these rules rotate, approaching each other closely but not touching, they compress the board. Compressive forces within the board cause it to rupture, yielding cut edges. For sheet-fed cutting, these etched flexible dies are mounted on large cylinders which, like sheet-fed offset plate cylinders, leave a gap between leading and trailing edges. This gap accommodates sheet feedup and variable repeats. For web cutting, however, leading and trailing edges must be butted to correspond to the continuously printed webs. Die mounting techniques as well as carton layout on the web are the keys to the successful operation of this approach.

Two additional specialty converting steps are accomplished on cutting and creasing equipment: foil stamping and embossing. Foil stamping involves the use of heat and pressure to transfer a thin metallic or pigmented coating from a carrier film to the carton surface to obtain patterned decorative effects. When this is done in combination with embossing, reflectance and gloss are combined with raised image effects for enhanced graphic presentation. Embossing alone can generally be accomplished on standard die-cutting equipment. Foil stamping and detailed, deep embossing requires the ability to heat the stamping and embossing plates. This is most commonly accomplished on a second pass through specialized equipment.

HOT-MELT APPLICATION

Hot melts (see Adhesives) can be preapplied at this or a later production point using knurled wheels or timed guns. The hot melt is later heat-activated on the packaging machinery to effect sealing. Although hot melt application on the packaging machine is common, some carton users find it advantageous for the carton manufacturer to preapply the hot-melt adhesive.

Windowing or Couponing

When product visibility is desired, a hole is cut out of the carton blank. To protect the product or prevent it from spilling out of the carton, pieces of an adhesive pattern are applied around the edge of the opening, a rectangular piece is cut from a roll of film and is then pressed in place. Registered application of printed films or printed coupons in roll form to interior or exterior surfaces adds value and function to the carton. Devices are also available that adhere coupons supplied in sheet form.

Gluing

Although more and more packaging machinery is designed to accept flat carton blanks (see Cartoning Machinery), gluing still represents a major and important converting operation. The simplest operation converts a flat blank into a side-seamed tube or glued shell (see Figure 2**b**). Carton blanks are removed one at a time from a stack and carried by sets of endless belts. Stationary curved plows move one or more panels of the blank out of the original plane to either prebreak scores or form the glue seam. Prebreaking of scores assists packaging-machine operation, since the force required to bend a previously bent score is greatly reduced. Sealing is accomplished with cold glues, hot melts, or heat sealing of polymers. Side-seamed cartons are discharged into a shingled delivery that provides compression and time to set the bond; case or bulk packing for shipment follows.

Gluers in which the cartons move in a continuous straight line, transported by belts, are known as straight-line gluers. Although straight-line gluers are most commonly used to produce glued shell-type cartons, attachments provide the ability to produce automatic-bottom as well as certain collapsible-tray styles. Paper or paperboard bridges can be attached to main panels during straight-line gluing. For simple styles, the feeding of carton blanks into the gluer does not need to be timed into specific folding actions. Complicated folding devices may dictate that blank feeding be timed, which generally reduces speeds. Compound folds in both directions on the blank cannot be handled by straight-line machines.

For more complicated carton and collapsible-tray styles, right-angle gluers are employed. As the name implies, midway through the machine the travel direction of the blank is changed by 90°. All parallel folds can be made in the direction of blank travel, resulting in simplified machine setup and more positive and accurate folding. Generally, speed is limited by the transfer section, which changes blank travel direction. Right-angle gluers combine flexibility and precision in the manufacture of complex folding cartons.

Setup and nested tapered trays are also produced in folding-carton manufacturing plants for shipment to customers. These trays are produced on plunger-type gluing equipment that is designed to accept either blank or roll feeds. Blank-fed machines first apply adhesive, then form the tray as a moving plunger forces the previously printed and creased blank through a stationary folding and forming device. Roll-fed machines incorporate printing as well as cutting and creasing units in-line prior to gluing. Nested trays are not as space efficient as unglued blanks; they do, however, have application in uses for which it would be uneconomical or impractical to operate a forming device at the location of use. Paperboard french-fry scoops and sandwich containers used by fast-food outlets are good examples of these trays.

DISTRIBUTION OF THE PRODUCT

The consumer eventually takes possession of the cartoned product. This can take place in a number of ways. For self-service retailing, the appearance of the package is important. Damaged or faded cartons probably would not be purchased. For a pharmaceutical product, the package must have a hygienic image. For supermarket transit, the package must be conveniently handleable, easy to open, and recyclable. A new consideration is to assure the consumer that the product is genuine and not counterfeit. Several techniques are available: for example, printing an identification on the carton using transparent varnish that is visible under UV light; incorporating a clear mark that is similar to a watermark; fingerprinting using near-IR technology; and the use of RFID labels on pallet loads and transit packs (6).

BIBLIOGRAPHY

Paul Obolewicz, “Cartons, Folding” in *The Wiley Encyclopedia of Packaging*, 2nd edition, John Wiley & Sons, New York, 1997, pp. 181–187.

Cited Publications

1. M. J. Kirwan, “Folding Cartons” in M. J. Kirwan, ed., *Paper and Paperboard Packaging Technology,* Blackwell Publishing, London, 2005.
2. D. Hunter, *Papermaking—The History and Technique of an Ancient Craft*, Dover Publications, New York, 1978, pp. 471, 552, 577.
3. *TAPPI Official Test Methods, Provisional Test Methods, Historical Test Methods*, TAPPI Press, Norcross, GA; subject index May 2008, www.TAPPI.org.
4. *Kliklok Packaging Manual*, Kliklok Corporation, Greenwich, CT, 1983 revision, p. I.
5. “Rotary Screen Printing,” *Packaging Magazine* **7(3)**, 22 (2004).
6. “RFID Radio Tagging,” *Paper Technology* **44**(10), 3–4 (2003).

CARTONS, GABLETOP

R. E. Lisiecki
Ex-Cell-O Corporation
Updated by Staff

INTRODUCTION

The gabletop folding format is one of the oldest and most basic end closures possible for a paperboard package. The first patent dates back to 1915 and was issued to J. Van Wormer for what he called a “paper bottle and later Pure-Pak (1). However, 20 years passed before the first commercial installation began to operate at a Borden Company plant, after the patent was acquired by Ex-Cell-O Corp. In 1997 Elopak bought Ex-Cell-O Packaging and the Pure-Pak license (2). Today a number of manufacturers supply machinery to make gabletop cartons for milk and other still liquids.

Early gabletop milk packages were precision-cut folding boxes with an adhesively sealed side-seam and bottom closure and a stapled top closure (see Figure 1). Semi-formed cartons were dipped in hot paraffin for sanitization and moisture proofing prior to filling. Tops were stapled. The first packages had no convenient opening device. Subsequent designs had convenience openings based on secondary patch seals adhesively secured to either the inside or outside of a side panel. The secondary patch was eventually eliminated in favor of an integral pouring spout.

The modern gabletop carton retains a simple basic geometry but includes design refinements acquired over 50 years of development and commercial use. The transition from the wax-coated carton to precoated paperboard came in 1961, necessitating several new developments in package and materials technology (see Extrusion Coating; Paperboard). The use of precoated board eliminated paraffin, wire, and adhesives from a filling plant’s inventory. Also eliminated were the associated mechanical systems, including carton-coating chiller units, wax melters, adhesive applicators, and related instrumentation. Precoated blanks simplified the form/fill/seal process and permitted the design of faster, more-efficient equipment with filling rates up to 300 cartons per minute. To retain the essential pouring-spout feature, an antisealant or *abhesive* was

Figure 1. Early gabletop container. It is paraffin-coated with a patch-type opening device.

developed. This allowed the carton top seal to be tightly sealed, yet easily opened (see Figure 2). Gable top cartons are also available with screw caps. These caps have external tamper-evident security plastic rings, which have to be broken in order to access the contents.

Figure 2. Current gabletop container. It is polyethylene-coated with a pitcher-spout opening device.

FABRICATION

A typical blank for a quart (946.25 mL) gabletop container is shown in Figure 3. With a panel width of 2.764 in. (7.02 cm) and a body height of 7.375 in. (18.73 cm), the apparent contained volume of 56.34 in.^{3} (923.25 cm^3) falls short of the quart volume of 57.75 in.^{3} (946.35 cm^3). The needed extra volume is found in the bulge of the side panels after filling, which leaves the filled product line below the top horizontal score, providing "headspace" necessary to compensate for foam generated during filling and to allow for a certain amount of splash as the filled container is conveyed through the top heat-sealing machine function.

The standard square cross section of the quart (946.25 mL) carton is used for a full range of containers from 6 fl. oz (177.4 mL) through the Imperial quart (1182.8 mL). Other cross sections in the same carton format have panel widths of 2.240 in. (5.69 cm), 3.3764 in. (8.576 cm), and 5.531 in. (14.05 cm), with container volumes from 4 fl. oz (118.3 mL) through one gallon (3.785 L). For quart-series containers, the typical paperboard structure consists of 195–210 lb (88.5–95.3 kg) per ream paperboard with a coating of 0.0005 in. (12.7 μm) of polyethylene on the outside surface and 0.001 in. (25.4 μm) of polyethylene on the inside surface. Other structures that include aluminum foil, ionomer (see Ionomers), and other barrier materials are also used (Figure 4).

A modification of the existing design is the Sahara bottom, which reduces water absorption by the raw edge. It is a feature that can be applied on the forming and filling machine. It has the effect of raising an uncoated paperboard edge in the sealed bottom away from contact with a wet surface. It is claimed that this reduces uptake of water by the raw edge of paperboard by 80% and prevents the bottom of the carton from becoming saturated with water (3).

Coated-paper containers for liquids provide relatively short shelf life. It is possible, however, to tailor the

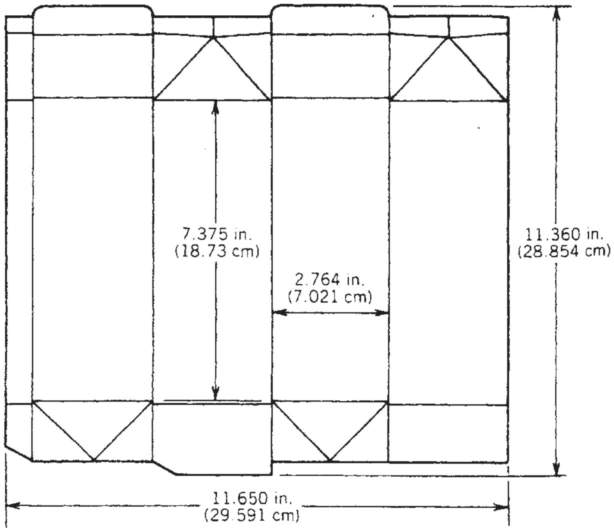

Figure 3. Typical profile for the quart (946-mL) series.

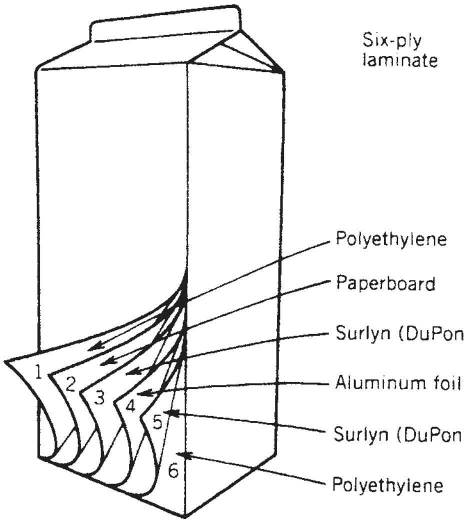

Figure 4. A typical six-ply laminate.

container to its contained product. Liquids with high solids content, such as milk or fountain syrups, are relatively easy to contain, since there is little product penetration of cut edges or random flaws in the coating. Other products require (a) near-hermetic seals, dictating a continuous high barrier such as aluminum foil, and (b) the elimination of cut edges in the finished containers.

This can be accomplished by a number of mechanical techniques including (a) skiving and hemming of the cut edge of the side seam and (b) refining the folding of the bottom closure to protect the cut edge from liquid contact. These techniques permit the successful packaging of oils and alcohol-bearing liquids with little problem. Special treatment of the paperboard may also be necessary to ensure package stability. A form/fill/seal machine erects cartons from flat blanks; and after filling, it seals the bottom. This machine is capable of handling 24,000 cartons per hour, similar to that of a modern canning line (2). Today's form/fill/seal equipment contributes to shelf life by enclosing the processing line. Some machines feature air filtration and carton sanitization systems.

APPLICATIONS

At its peak, the gabletop carton was the premier package for milk and other fluid products in the United States. Process refinements permitted its use for other likely products, such as fruit juice and fountain syrups, and a few unlikely products, such as candy and epsom salts. Newer applications include the packaging of cooking oil, liquid egg products, and dry food. Tetra Rex, 750 g in 2-L cartons, has been used to launch a high-fruit-content muesli. Freeze-dried vegetables are packed in large Pure-Pak cartons for the catering and institutional markets (3). In the United States, the plastic blow-molded bottle (see Blow Molding) has become the container of choice for gallons (128 fl oz or 3.785 L) of milk, but the paperboard gabletop carton is still favored for smaller sizes.

BIBLIOGRAPHY

R. E. Lisiecki "Cartons, Gabletop" in M. Bakker, ed., *The Wiley Encyclopedia of Packaging Technology*, 1st edition, John Wiley & Sons, pp. 152–154; 2nd edition, A. J. Brody and K. S. Marsh, eds., 1997, pp. 187–189.

Cited Publications

1. J. Van Wormer, U.S. Patent 1,157,462 (October 19, 1915).
2. M. J. Kirwan, "Paperboard-based Liquid Packaging" in M. J. Kirwan, ed., *Paper and Paperboard Packaging Technology,* Blackwell Publishing, Ltd., London, 2005.
3. *Packaging News*, 2 (May 2000).

CASE LOADING

Walter Warren
Salwasser Manufacturing
Company, Inc.,
Decatur, Georgia

The corrugated case is still the most universally accepted method of packaging and shipping products from one destination to another (see the Boxes, corrugated article). It offers excellent product protection in both storage and shipping with the additional benefit of full-panel graphic identification or advertisement exposure. The terms *case packing*, *case loading*, and *casing* all refer to the method of placing product into corrugated shipping containers. This can be accomplished by the fundamental method of hand loading or by semiautomatic or automatic case-loading machinery. This article is structured to demonstrate a normal sequence of conversions from hand loading to fully automatic loading. Cases, whether manually or automatically loaded, are classified as top load, side load or end load. The top-load case has flaps in the largest panel and is the most expensive because of the large flap area. An end-load case, with flaps on the smallest panel, is the least expensive. Proper machinery selection depends on many variables such as the type of package, style of case, production rates, automatic versus semiautomatic machinery, floor space, and rate of investment return. The following basic case-loading methods are discussed below: hand loading, horizontal semiautomatic case loading, horizontal fully automatic case loading, vertical drop-load and gripper-style case loading, wrap-around case loading, and tray former/loader.

HAND LOADING

This is the simplest version of case loading. It requires limited machinery involvement, but it is highly labor intensive. As packages are delivered to the packing area, personnel manually open, load, and seal the corrugated cases using a variety of closing methods including cold glue, hot-melt glue (see the Adhesives article), tape (see the Tape, pressure sensitive article), or metal staples (see the Staples article). Cold and hot-melt adhesive applicators are most common (see the Adhesive applicators article). Replacing the case-closing operation with an automatic top-and-bottom case-sealing machine is the first step in automation. This unit can always be used later as the packaging line converts to fully automatic. To decrease labor and increase production, the manual loading operation is replaced with a semiautomatic case-loading machine integrated with the existing top-and-bottom case sealer.

HORIZONTAL SEMIAUTOMATIC CASE LOADER

With this type of equipment, the product is loaded from the side (see Figure 1). This method offers considerable flexibility in obtaining the desired case pattern, which is defined as the position or orientation of cartons grouped inside the case. It is ideally suited for handling cartons, cannisters, cans, or any product that takes a rigid or semirigid shape. The most common product handled is consumer-type cartons, which are loaded in a variety of configurations and counts. The semiautomatic case loader requires an operator to open manually a flat premade corrugated case, fold the bottom flaps, and place it on the machine-loading tube or funnel ready for package insertion. All other machine functions are performed automatically. All other machine functions are performed automatically. Typically, an operator can open approximately 10–12 cases/min. Higher case rates would require fully automatic case-loading machinery, which is described below. Package speeds in excess of 500/min are obtainable, but the number of cartons per case and the dexterity of the operator dictate if it can be done semiautomatically.

The basic unit includes an infeed conveyor to receive packages and deliver to the machine accumulator section, where the product is grouped or stacked to the prescribed case pattern and loaded into the already opened and formed corrugated case. Single tier and multitier case patterns are easily accommodated. Multitier applications require the cartons to be stacked prior to loading. Functionally, the infeed conveyor delivers cartons to a lifter plate, where the prescribed number is accumulated. Through a pneumatically operated cylinder, the cartons are lifted and deposited on stacker bars. The lifter returns and continues this cycle until the correct number of cartons have been grouped in front of the loading tube. A pneumatically operated side-ram cylinder pushes the final load into the case. Because of the slower case rates of semiautomatic machines, air cylinders are normally used for the product lifting and side-ram load motions. Mechanical cam/crank and/or servo drives usually perform these same motions on automatic high-speed machines. Many machine configurations and accessories are available including multilane units for higher package production rates. Standard upstream filling and packing machinery usually discharge product in a single lane; the use of multilane casers would require some type of package lane dividing systems. Many packages must be repositioned to coincide with the case pattern; this is accomplished through rail twisters, upenders, turn-pegs, and so on. Converging equipment is also available if the output from several upstream packaging machines must be converged into the caser single-lane infeed. After final loading, the filled case is lowered onto a short discharge conveyor ready for final case sealing. The existing top-and-bottom case sealer can be used or any other type of sealer. This approach to case loading is ideal for lowercase rate applications. It requires minimal capital investment, but it is a major step in automation. At this point, the horizontal semiautomatic case loader has eliminated the hand-load operation and reduced the personnel to one operator. The next sequence in automation replaces the operator with an automatic corrugated-case erector, forming a fully automatic case-loading system.

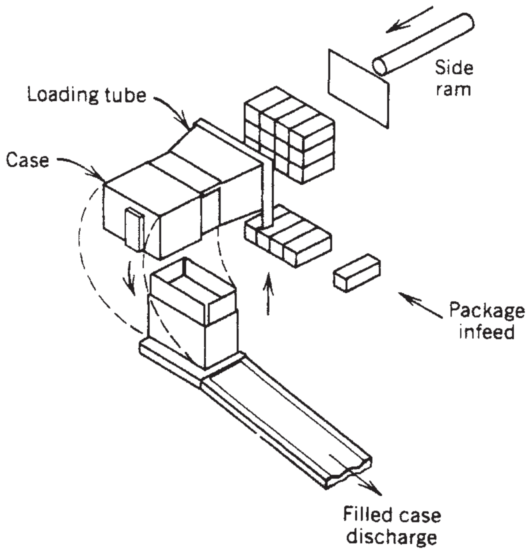

Figure 1. Horizontal semiautomatic case loader.

STEPS TOWARD FULLY AUTOMATIC CASE LOADING

There are normally two approaches to automatic case loading a fully automatic integrated system including a case erector, loader, and sealer or a case erector loader that uses an existing case sealer. Most case-loading machinery is manufactured in modular design to allow the proper equipment selection for the application. Consideration should always be given to how existing equipment can be used in conjunction with new equipment. A decision to automate, and how to do it, is based on many considerations: case rates in excess of 10–12 min, high package-production rates, packages more easily loaded automatically, large-size cases more easily handled automatically, labor reduction, floor space reduction, and increased line production and efficiency.

Case Erector/Loader. This machine is equipped with a flat-corrugated storage magazine that will, on demand, extract a case from the magazine, open it, fold in bottom

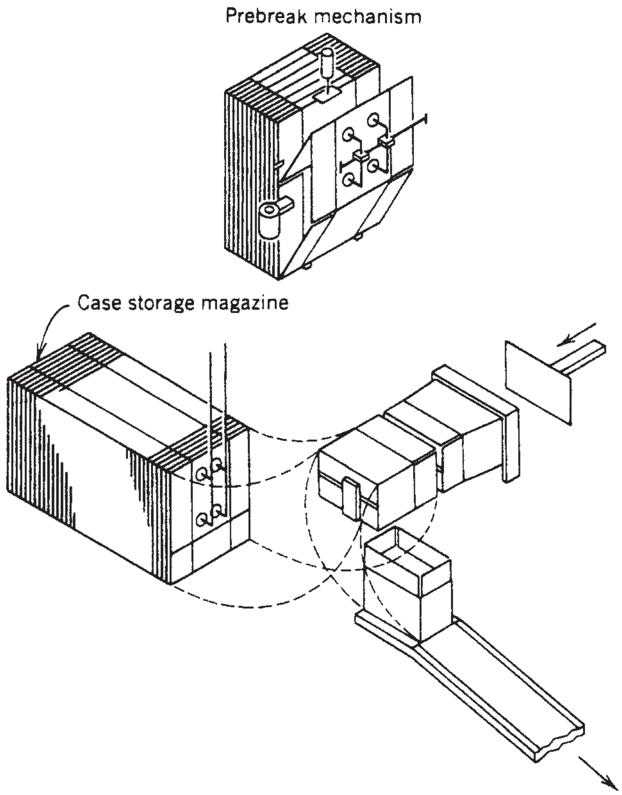

Figure 2. Case erector loader.

flaps, and automatically place it on the caser loading tube for final package insertion (see Figure 2). After loading, the filled case is lowered onto a discharge conveyor and transferred into a new or existing case-sealing machine. Case extraction and opening are the most critical functions of an automatic erector. Corrugated cases have a built-in memory (resistance), and proper blank scoring will increase opening efficiency. Although more expensive, experience has proven that equipment offering mechanisms to prebreak or restrict the case back panel during opening are well worth the investment. Generally, vacuum/pneumatic mechanisms seem to function well up to approximately 20 cases/min. Higher case rates normally require a mechanical/vacuum/pneumatic combination with several stations for case extracting, opening, and loading. Both horizontal and vertical case magazines are available. The automatic case erector can be added to an existing semiautomatic case loader with its separate sealer, or it can be offered as part of a new integrated system interfaced with the existing case sealer. The case erector eliminates the operator who would otherwise open cases manually; therefore, the erector flat-case storage magazine must have sufficient capacity for at least a 30–60 min supply. If floor space permits, additional magazine capacity is encouraged. Vertical-style magazines are offered with bulk-storage feed systems where several stacks of cases are loaded on a floor-level conveyor and on demand, feed automatically to the magazine (see Figure 3). A variety of case erectors is offered for various case rates of ≤ 30 cases/min.

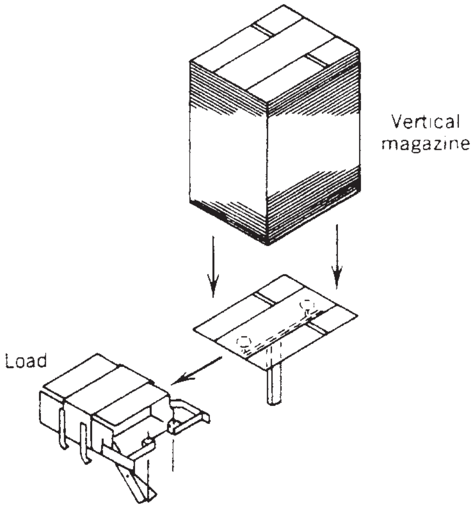

Figure 3. Vertical magazine.

HORIZONTAL AUTOMATIC CASER ERECTOR/LOADER/SEALER

The final approach in automation incorporates a completely integrated system. A new automatic case extractor/sealer can be integrated with an existing semiautomatic caser to form a fully automatic line, but the case erector/loader/sealer is normally purchased new as a part of the complete packaging line. Case extracting/loading functions are the same as those discussed above, but after loading, the filled case is transferred horizontally through the glue-application section and into the compression unit using heavy-duty continuous-motion cleated chains. Minor case flaps are folded closed and major flaps are opened ready for adhesive application. After gluing, stationary plow rods fold in major flaps as the case is deposited into the intermittently driven side-sealing compression unit (see Figure 4). A secondary set of top chains may be employed to ensure that the case is presented squarely to the compression unit. Vertical compression units for use in overhead filled-case conveying systems reduce initial floor-space requirements. The compression-section length is a function of the type of adhesive used and its corresponding drying time. Both hot-melt and cold-glue adhesives are commonly used (see Adhesives). Hot-melt adhesive has a faster setup time and requires a relatively short compression section, usually 4–5 ft (1.2–1.5 m). Cold-glue adhesive takes longer to set and requires more compression-section length. The hot-melt adhesive unit takes less space, but it is somewhat more expensive than the cold-glue system. Polyvinyl chloride (PVC) sealing tapes are becoming an attractive sealing method for various reasons, and most automatic machines can be equipped with tape heads in place of glue heads (see the Tape, pressure-sensitive article). Compression-section length can usually be reduced, because no drying time is required. As with all automatic machines, the flat-corrugated case magazine storage capacity should be large enough to ensure that an operator is not constantly

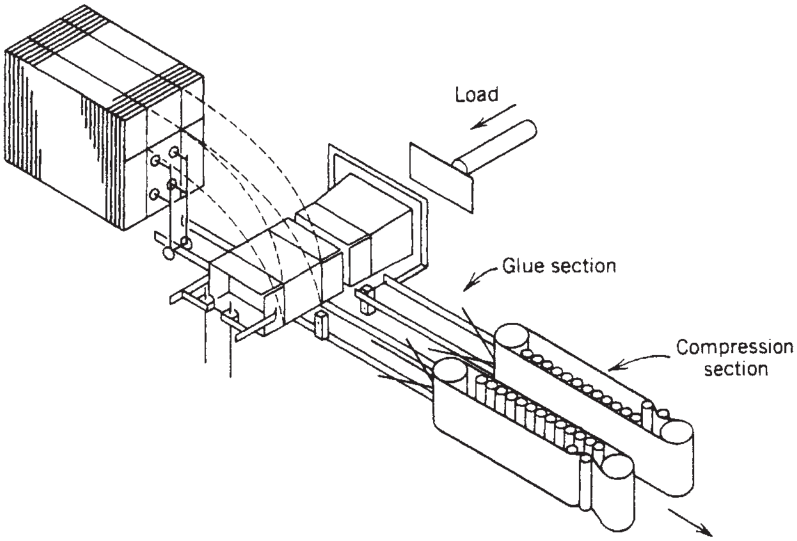

Figure 4. Horizontal fully automatic case loader.

replenishing the supply hopper. A complete automatic system offers many advantages including higher case rates, increased line efficiencies, labor reduction, and the operational technology of programmable logic controllers (PLC). The machine functions are now computerized and programmed accordingly. This information can be coordinated into the main control center, providing valuable information to the production department. This new electronic technology offers many specialized options, such as operator interface panels, data highway information systems, and troubleshooting diagnostic displays. In summary, the horizontal fully automatic case opener, loader, and sealer can receive product from upstream packaging equipment and delivering that product to the shipping department in a sealed corrugated case. This is all accomplished in a relatively small area at speeds of ≤ 30 cases/min. Continuous-motion machines are available for case rates in excess of 50/min but require considerably more floor space.

VERTICAL CASE LOADERS

This method of case loading is used primarily in the beverage, glass, can, and plastic container industries, where fragile or irregular-shaped containers require some special packing considerations. As with the horizontal case packers, the product is delivered to the machine infeed conveyor from upstream filling equipment to the accumulator section. Tabletop chain is commonly used in delivering the product to reduce backpressure during the load cycle and for infeed washdown applications. Cylindrical-type products are divided automatically into several lanes using oscillating or vibrating dividers to form the accumulated load pattern. Irregular-shaped containers such as blow-molded plastic bottles must be divided by special equipment. When all lanes are filled in the accumulator area, a formed corrugated case is positioned underneath the loading mechanism ready for depositing. At that point, retractable shifter plates in the accumulator area move out, which allows the containers to drop vertically through fingers into the cells of the case (see Figure 5). Special fingers guide and reduce side shock to the containers during the load cycle. The use of cells or corrugated partitions inside the case to eliminate container contact is based on product-protection requirements. Usually glass containers have partitions, and plastic containers do not. Case rates of up to 25/min are achieved for intermittent motion machines, whereas newly developed continuous motion equipment approaches 40–50/min. The vertical case loader can be interfaced with many different kinds of corrugated-case erecting equipment. Manual case set up and placement under the load area tied into a case sealer is one alternative. Another technique used by the glass and plastic bottle industries, is

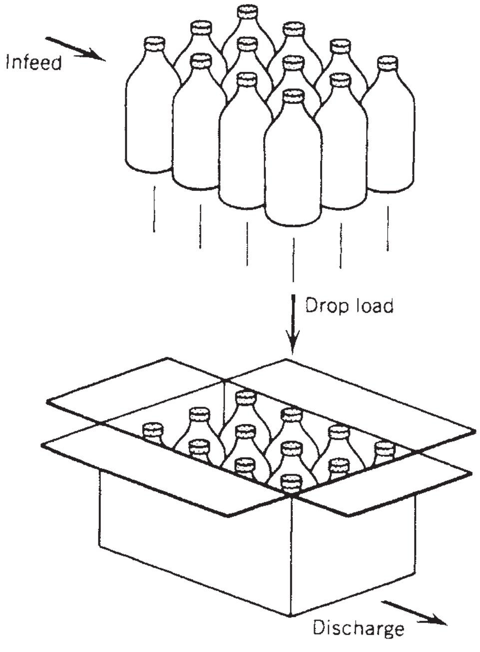

Figure 5. Vertical drop-load case packer.

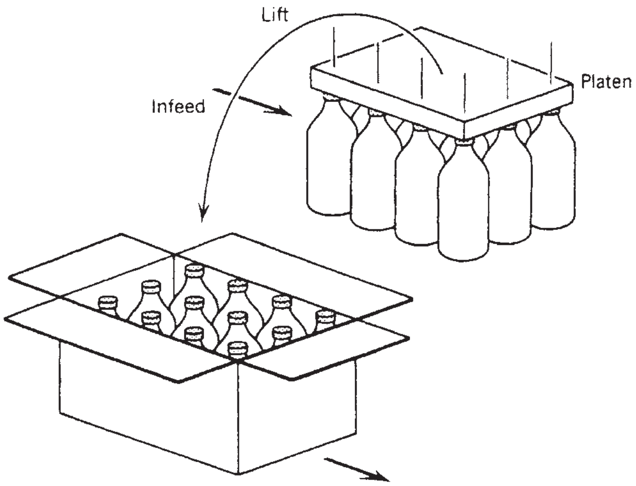

Figure 6. Vertical gripper-style case packer.

to ship empty bottles in cases to the filling plant where they are emptied, filled, and loaded back into the reshipper cases using a top-case sealer. A third method is to incorporate an automatic case erector, vertical loader, and sealer. The machinery selection is based on floor space, capital investment, type product to be handled, and most important, the case-rate requirement.

Another vertical-load method for handling fragile or heavy containers and flexible pouches is one that utilizes vacuum or mechanical grippers to lower the containers into the case (see Figure 6). This approach is ideal for containers that can be gripped at the top, such as glass or plastic bottles. The containers are delivered and accumulated in the same manner as with the vertical drop loader, but a special plate or load head incorporating vacuum or mechanical grippers moves down and picks up approximately 12 containers at a time and places them in the opened corrugated case. Generally, both the drop-load and vacuum or mechanical gripper-style machines are offered in multiload station modules to obtain speeds of 40–50 cases/min with automatic case erectors. Although slower, flexible pouches, cartons, and irregular shaped containers are currently being loaded in the same manner using robotic multiaxis motions with a variety of vacuum and mechanical grippers. Robotic case loading is emerging as a viable alternative to conventional vertical loading because of its product handling versatility, less floor space, and quick changeover.

Equipment is also available that loads cartons, cans, tapered cannisters, and so on vertically up through the bottom of a case. This method is usually limited to top-load cases, but it does offer the advantage of eliminating possible package repositioning. A case is extracted and opened in the conventional method over the accumulated product. On demand, the product is lifted up into the case, which is then transferred horizontally into the sealing section. For the most part, both horizontal and vertical case-loading equipment are of the intermittent-motion design, which is somewhat speed limited. Requirements for higher speed have led to the development of faster filling machinery and continuous-motion casing equipment that runs in excess of 2400 cases/min and 1200 boxes/min. This special machinery is an integrated system handling multiple cases. Continuous-motion horizontal case-loading equipment using both premade RSC and wraparound blank cases (see the Boxes, corrugated article) have exceeded the 50/min range. These rates apply to some special tray forming/loading applications as well. Because upstream filling equipment for cartons and flexible packages has not achieved the high rates of the can and bottling fillers, the requirement for continuous-motion carton-type casers has been limited.

AUTOMATIC WRAPAROUND CASE LOADING

An entirely different approach to case loading uses a five-panel corrugated blank instead of a flat premade corrugated case with the manufacturer's joint already glued. Vertical or horizontal corrugated blank-storage magazines are employed that extract the blank and position it between chain lugs by either vacuum or mechanical mechanisms. During this motion, both side panels are folded into a vertical position forming half the case. The blank is then positioned in front of the loading machine where the product is either pushed onto the blank or dropped vertically (see Figure 7). After loading, the top panel is folded down over the product and final flap folding and gluing is completed. Depending on the type equipment, the manufacturer's joint is then glued and folded down to one of the vertical panels for final sealing. Wraparound casers are usually larger and more complex than loaders for premade cases owing to the additional functions that must be performed, but depending on the size of the case, there may be some economical board-cost advantages using a five-panel blank. Pneumatically operated machines can achieve speeds up to 20 cases/min; higher rates of approximately 30 cases/min would require a more mechanical/pneumatic design. Continuous-motion wraparounds are available for special applications with speed requirements in the 40–50/min range. Both horizontal and vertical blank storage magazines are available

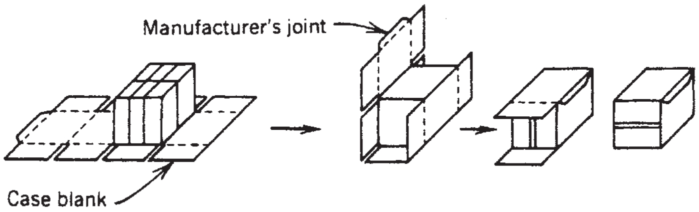

Figure 7. Wraparound case loader.

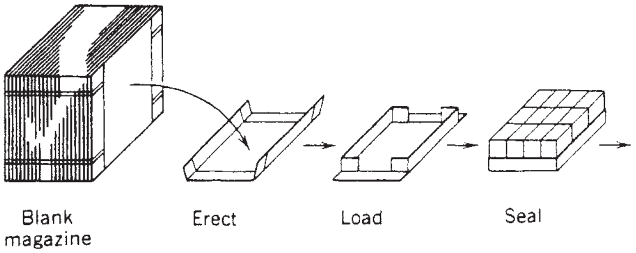

Figure 8. Tray former/loader.

as well as vertical compression sections suited to overhead case-conveyor systems (see the Conveyors article). The selection of a wrap-around versus a premade case machine requires close scrutiny of the particular application requirements including type of case, potential board savings, machine cost, floor space, case rate, size case, and so on.

TRAY FORMER/LOADER

The concept of replacing a corrugated case with a shrink-wrapped tray was developed as part of an ongoing effort to reduce packaging material costs. The tray former/loader (see Figure 8) with a shrink wrap is ideally suited for those products, e.g., cans and bottles, that do not require the complete product protection provided by a full case. Corrugated trays that are 1–2 in. (2.5–5.1 cm) high are preferred, but there are a host of different tray designs suited to the product, distribution, display, and so on. Many machine alternatives are available, including equipment to make a tray and present it to a vertical or drop-load caser. There are also integrated systems that extract a blank from the magazine, fold up two or three sides of the blank, index to the load area (where the product is deposited horizontally or vertically), and transfer, folding remaining panels, and gluing to form the final tray. At this point, the filled and sealed tray is indexed into a shrink-wrapping machine (see the Wrapping, shrink article) where film (see the Films, shrink article) is completely wrapped and shrunk around the complete load. The film unitizes and holds the product in the tray and provides protection from the external environment. The cost for the corrugated tray and shrink film is considerably less than a full corrugated case, but consideration must be given to product protection and warehouse stacking strengths because now the product must bear the full vertical load, warehouse identification, and so on. Tray rates for intermittent-motion machines are approximately 30/min, whereas continuous-motion machines can run in excess of 70/min.

OTHER CONCEPTS

The case-loading field is extremely broad, and many other different types of machines are available for sp ecial markets and applications too numerous to describe in detail. For example, there is automatic case-opening/bottom-gluing machinery that presents an opened case with the bottom flaps glued for the manual loading of large or irregular-shaped items. This same equipment can also present an opened/glued case to a vertical or drop-load caser, increasing the operating speeds of hand-packed lines. Automatic case openers are available that bring a case down vertically over the accumulated product and then fold and seal the flaps or that lift the acculated product vertically up through the bottom of a corrugated case, folding and sealing flaps accordingly. There are case loaders that role the product into the case and manual machines that are used for handling irregular-shaped products in a wrap-around blank. All these variations and concepts are necessary in providing the unique machinery to meet the changing markets and products of today.

BIBLIOGRAPHY

General References

The PMMI 1984–1985 Packaging Machinery Directory, Packaging Machinery Manufacturers Institute, Washington, DC.

S. Sacharow, *A Guide to Packaging Machinery*, Harcourt-Brace Jovanovich, New York, 1980.

CAST, POLYPROPYLENE

Eldridge M. Mount
EMMOUNT Technologies,
Canandaigua, New York

Cast polypropylene film is made primarily by the chill-roll cast film process using multilayer coextrusion systems (Figure 1). Other methods can also be used to produce cast polypropylene film such as slot die extrusion into a water bath or a tubular water quench processes. However, these have been largely superseded by the cast film process due to the higher productivities and superior film flatness possible with the chill roll process. Because cast polypropylene film does not go through the solid-state orientation process (see Film, oriented polypropylene), the barrier properties, low temperature durability, and mechanical strength are not as well developed as in mono- or biaxially oriented polypropylene film. Typical cast polypropylene films are desired for their increased temperature resistance, high clarity, and gloss compared to typical cast or blown polyethylene films. Other desirable properties of the cast polypropylene is the films stiffness, oil and grease resistance, and heat sealing properties when used as a sealant layer in a lamination to paper, cellophane, oriented polyester, or oriented PP. Barrier properties of cast polypropylene may be significantly enhanced by vacuum metalization allowing the film to compete directly with oriented metalized films in laminations.

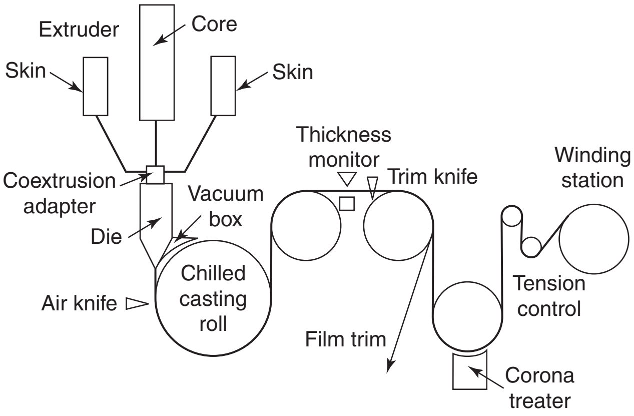

Figure 1. Three-layer cast-film line.

A typical product design of a 1 side corona treated, three layer cast PP film is shown in Figure 2. Depending on the desired film surface properties, the films can have the same or different outer skin polymers to give coextruded films with A/B/A, B/B/A or A/B/C structures. Product designs of this type are alone or for inner sealing webs in laminations, where the treated surface is the lamination surface. Suitability of the films for metalization of the treated surface will depend on the type and level of migratory and particulate additives added to the film.

Typically, the film design of Figure 2 would have 500–3000 ppm of a migratory slip additive, such as erucamide, added to the skins and the core of the film to reduce the film coefficient of friction (COF). The outer skins will also have 2000–6000 ppm of a mineral antiblock particle such as amorphous silica (of 1.5–8-micron average diameter) added to aid in blocking resistance, COF control, film winding, and packaging machine performance. Metalization grade films would be produced without any migratory or particulate additives in the treated (metalization) surface and a reduced level of migratory additives in the core layer.

Five-layer product designs add considerable flexibility to the ability to tailor film properties by both layer polymer selection and film layer additive control. Figure 3 shows a product design for optimizing the effectiveness and cost of expensive film additives such as antiblock particles. In this design, the antiblock particles are confined to the outermost thin surface layers to enhance their effectiveness and decrease the overall additive concentration in the film. This reduces the cost of the film by reducing the consumption of additive concentrates and helps improve film clarity by lowering film haze induced by the particles. The potential number of product designs possible with five or more layers is enormous and greatly aids in the production of products focused for various end uses while enhancing product properties.

Corona treated surface

10%-25% random copolymer PP outer layer
80% to 50% homopolymer PP core
10%-25% random copolymer PP outer layer

Figure 2. Typical three-layer cast PP film product design.

Cast polypropylene films are being used in both packaging and nonpackaging applications. In the packaging area, the majority of applications are food-related. In food packaging, the cast polypropylene film accounts for a major share of the candy twist wrap application, because cast polypropylene film is particularly suitable for newer high-speed twist wrap machines. In cheese-wrapping applications, polypropylene/low-density polyethylene (PP/LDPE) coextruded film is used because of improved moisture barrier and film stiffness supplied by the cast polypropylene layer compared to single-layer LDPE.

Cast polypropylene film lamination using a high-strength outer web for snack-food packaging are widely used in Asian markets and represents a large potential market in North America, particularly in applications and laminations using metalized polypropylene films. In the metalized laminations, the cast polypropylene is metalized and represents the addition of a high-barrier sealant to the lamination. In addition, the use of the metalized cast polypropylene in laminations permits the use of reverse-printed outer webs giving improved graphics and print durability when compared to laminations of surface printed metalized films to LDPE sealants. In laminations that do not require the low-temperature durability and mechanical strength of metalized oriented polypropylene films, cast polypropylene film can offer an improved heat sealing capability readily producing hermetic seals, a distinct advantage in some applications and markets.

Other applications include tapes, labels, diaper components, photograph holder, page protectors, medical

Corona treated surface

2%-5% random copolymer PP outer layer + Antiblock particle
8%-20% random copolymer or homopolymer PP intermediate layer
80% to 50% homopolymer PP core
8%-20% random copolymer or homopolymer PP intermediate layer
2%-5% random copolymer PP outer layer+ Antiblock particle

Figure 3. Possible five-layer cast PP film product design to optimize additive addition.

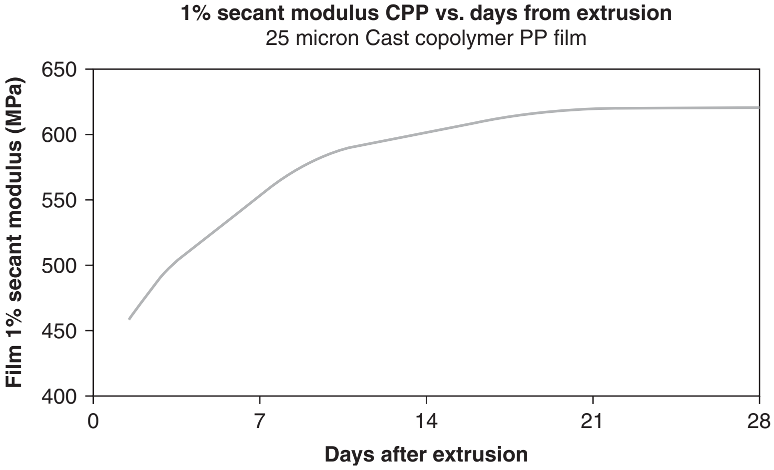

Figure 4. Plot of 1% secant modulus as a function of time from extrusion of a 25-micron cast film of PP random copolymer. (Redrawn from reference 4.)

packaging, and textile packaging. The advantages for using cast polypropylene film in textile packaging are faster bag production rates and better contact clarity and gloss for PP compared to LDPE. The use of cast polypropylene film for medical packaging is a potential growth area, due to PP's higher temperature resistance in steam sterilization. Cast polypropylene film laminated with high-temperature-resistant outer web is particularly suitable for retort pouch applications due to the high-temperature resistance for cast polypropylene film in the retort process. This is also an advantage in microwavable cook in bags emerging in the market. Cast multilayer polypropylene films are being used for industrial stretch film applications. In the stretch film application, the use of multilayer coextrusion of PP with PE resins is being used (1, 2) to increase the toughness of the stretch films.

FILM FABRICATION

Cast polypropylene film is commonly made by chill roll casting drum process. Today three- to five-layer cast lines of 6000-mm widths running at speeds of 350 m/min producing rolls of up to 1.2-M diameter are available. Typical extrusion melt temperatures are from 480°F to 520°F. Screw designs are varied but will tend toward longer L/Ds and barrier designs typical of PP extrusion. Today many new cast polypropylene film products are made by the coextrusion process using a multilayer feedblock–single cavity die combination, or a multicavity flat die or a combination of a feedblock and a multicavity die. Film product design complexity is increasing as the use of microlayer films is increasing due to claimed physical and barrier property advantages.

Once melted and formed in the coextrusion system, the polypropylene extrudate emerges out of the flat die and is immediately quenched on the chill roll with an air knife or vacuum box. This melt pinning forces the extrudate into intimate contact with the chill roll (see Figure 1). Increasing the chill-roll temperature and/or increasing chill-roll takeoff speed normally improves film stiffness but decreases optical clarity. After the quenching station, there is an edge trimming station to slit off the thickened edges formed as the melt is drawn from the die. Then, a film-thickness monitoring device, typically with a β-radiation source, is repetitively moved across the film on a rigid

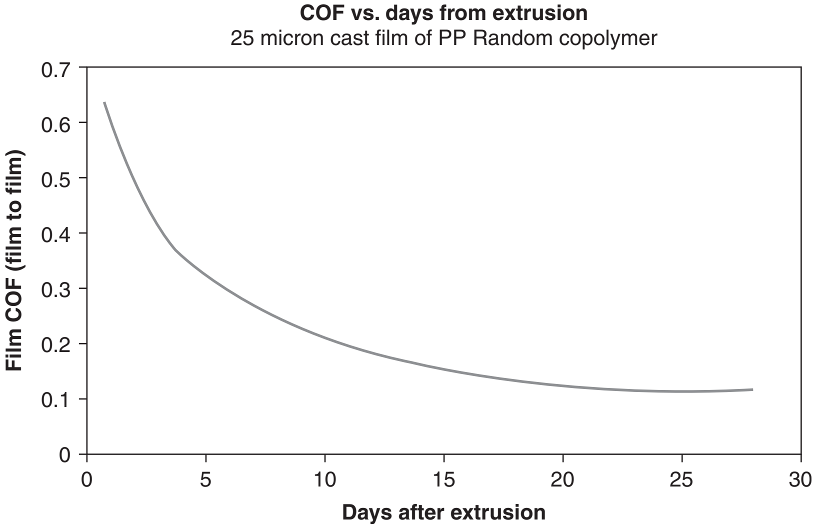

Figure 5. Plot of film-to-film coefficient of friction as a function of time from extrusion of a 25-micron cast film of PP random copolymer. (Redrawn from reference 4.)

Table 1. Typical Properties for Nonoriented Polypropylene Film (1 mil)

Properties	Copolymer	Homopolymer	ASTM Test Method
Density, g/mL	0.89	0.90	D792
Haze, %	2	2	D1003
Gloss, %	86	86	D2457
Ultimate tensile strength, psi			
MD	8600	9200	D882
TD	5200	6300	
Elongation, %			
MD	500	600	D882
TD	650	650	
1% secant modulus, psi			
MD	70,000	100,000	D882
TD	70,000	100,000	
Heat-seal temperature range, °F	270–330	330–370	
Water-vapor transmission rate, $g \cdot mil/100\,in.^2 \cdot 24\,h$ 90% rh/100°F	0.8	0.7	Mocon
Oxygen permeability, $C(mL \cdot mil)/(100\,in.^2 \cdot 24\,h/atm$ 23°C, 0% rh	240–300	240–300	Mocon

track to scan the film width and report the transverse-direction (TD) thickness (gauge) profile. Automatic control systems then adjust the die opening to control film thickness to specified thickness tolerances. Film thickness variations of 1–2% are readily achieved.

Between the thickness monitoring station and the film winding station, a corona treatment station is located to enhance film surface energy of the film. This is done to improve the wetability of the film surface for better ink printability, metalization, or lamination adhesion.

Tension control for cast polypropylene film winding is very important due to the relatively low modulus of the film. With very high tension, the film tends to stretch as it is wound in the area of any areas of thicker film. These stretched areas form harder raised bands in the wound roll which are called a “gauge band.” When such a roll with hardened gauge bands is unwound for use, it will not lay flat in the stretched area and will show defects that are called “baggy lanes” in the film. Films with baggy lanes are unsuitable for subsequent slitting, printing, metalization, or lamination. To aid in minimizing gauge bands, winder oscillation in the transverse direction, of up to 10 cm, can be added to randomize the gauge profile. This can, in some cases, avoid the buildup of the gauge band and minimize or eliminate baggy lane formation.

After winding up, the mill rolls normally need post-treatment (aging) to stabilize the film properties. A general aging condition is 40°C for 72 h. This aging is necessary because polypropylene undergoes a secondary crystallization. The secondary crystallization is most pronounced over a period of 7 days but can continue for up to 21 days. The impact of the secondary crystallization can be observed as an increase in film modulus with time (Figure 4) (3).

Film surface coefficient of friction (COF) can, and often must, be modified with antiblock particles and migratory slip additives, such as fatty acid amides, to improve the film-handling characteristics on packaging machines. However, these additives reduce film clarity by increasing film internal (particulate additives) and surface (migratory additives) haze. The balance of film clarity and surface COF must be optimized to insure a balance between appearance and film machineability. Coextrusion technology is used to minimize the level of particulate additives by limiting them to the films outermost surface layers, maximizing the surface effects while minimizing the additive effect on clarity. Film COF will decrease with storage time as the migratory additives diffuse (Bloom) to the film surface (Figure 5) (4) and create a thin layer of additive on the surface which serves as a surface lubricant. The time required to complete the additive migration will depend upon the storage temperature and the migratory additive chosen. Migratory slip technology is difficult to control with any precision and can result in films with too high a COF (low migration) or too low a COF (high migration). Too high a migration can create a weak boundary layer on the film surface and prevent proper ink, metal, or adhesive bonding. Too high a migration will also interfere with film optics giving lower gloss and increased haze.

FILM PROPERTIES

Cast polypropylene films can be a monolayer or multilayer coextruded film to balance barrier, printing, heat seal, COF, and other properties. Typical properties for cast polypropylene film are shown in Table 1. Oriented polypropylene film is superior to cast polypropylene film in barrier properties and mechanical strength. However, cast polypropylene film has excellent tear resistance and is cost effective. Each type of film has benefits and disadvantages, which must be weighed in determining which film is most appropriate ("fit for use") for a particular application.

BIBLIOGRAPHY

General References

K. R. Osborn and W. A. Jenkins, *Plastic Films,* Technomic Publishing, Lancaster, PA, 1992.

J. H. Briston and L. L. Katan, *Plastics Films,* Longman Scientific & Technical, London, 1989.

K. M. Finlayson, *Plastic Film Technology,* Technomic Publishing, Lancaster, PA, 1989.

I. Miglaw and E. Pirog, “Film, Nonoriented Polypropylene”, in M. Bakker, ed., *The Wiley Encyclopedia of Packaging Technology*, John Wiley & Sons, New York, 1986, pp. 315–317.

Cited References

1. S. Miro and W. L. Harkey, “Industrial Stretch Films,” U.S. Patent 5,756,219, May 26, 1998.
2. D. Simpson and T. Jones, “Multilayer Stretch Cling Film,” U.S. Patent 6,265,055, July 24, 2001.
3. Redrawn Figure 1 from I. Miglaw and E. Pirog, “Film, Nonoriented Polypropylene” in M. Bakker, ed., *The Wiley Encyclopedia of Packaging Technology*, John Wiley & Sons, Inc., New York, 1986, p. 316.
4. Redrawn Figure 1 from I. Miglaw and E. Pirog, “Film, Nonoriented Polypropylene” in M. Bakker, ed., *The Wiley Encyclopedia of Packaging Technology*, John Wiley & Sons, New York, 1986, p 316.

CELLOPHANE

Updated by Staff

INTRODUCTION

The word *cellophane* was derived from the first syllable of cellulose and the final syllable of diaphane, meaning transparent. It was invented in the early 1900s in France and introduced in this country in 1924 by E. I. du Pont de Nemours & Company, Inc. In the early stages, cellophane was somewhat of a curiosity that was very expensive, and its use was limited to the packaging of luxury items.

The growth of cellophane paralleled the growth and development of the entire flexible-packaging industry, from printing presses and inks to automatic packaging machinery. For 30 or more years, the dominant flexible packaging material was cellophane because it was so well suited to offer the marketplace a wide variety of characteristics adaptable to product needs at reasonable costs. The large markets were in the areas of baked goods, candies, and tobacco products.

The advent of plastic materials such as polyethylene and polypropylene started the corrosion of cellophane consumption that resulted in the closing of many cellophane plants, due mostly to the higher prices of cellophane. However, in a new more environmetnally conscious market, cellophane may return in popularity. Cellophane is 100% biodegradable and made from a renewable source.

Cellophane is a thin, flexible, transparent material used worldwide mainly in packaging applications. The primary raw material used in manufacturing cellophane is “dissolving” wood pulp purchased from wood pulp suppliers. Since its introduction in 1924, additional types of cellophane have been introduced to meet changing packaging needs. The primary markets for cellophanes are the food, pharmaceutical, and healthcare product markets. In the food sector, cellophane is used to package nuts, candies, dried fruits, spices, cake mixes, and greasy or oily products (1).

FEATURES

Cellophane has various attributes that have accounted for its continued acceptance and ongoing utilization in flexible-packaging applications. These include:

- *Dead-Fold.* Once shaped in certain packaging applications, cellophane, unlike plastic films, can maintain its shape. This is especially true in twist-wrap applications such as packaging for hard candies.
- *Ease in Tearing.* Differentiated tensile strength within cellophane allows for ease in tearing and opening products that utilize this material for packaging and for tape.
- *Machinability.* Cellophane can be cut and sealed easily and economically. Many competing flexible-packaging materials require more sophisticated and expensive packaging equipment to process them. A method and device for finishing cellophane packets has recently appeared in the literature (2).
- *Appearance.* Cellophane has a high level of gloss and haze versus certain competing flexible films. These factors are important to customers desiring a premium appearance for their packaging.
- *Resistance to High Temperatures.* Cellophane can be used in temperature ranges above those of many common plastic films, which is critical for hot-fill applications and for use in shrink tunnels.
- *Barrier to Air and Moisture.* Cellophane, when coated with poly(vinylidene chloride) copolymer (PVdC) or other barrier resins, has increased strength, seal, and barrier properties. Uncoated cellophane has good barrier to gases and aroma, but poor barrier to moisture.

FILM TYPES

Cellophane film is produced in various types, which vary with respect to (*1*) film thickness, (*2*) film width, (*3*) type and degree of coating, and (*4*) combination with other materials.

1. *Film Thickness.* Cellophane can be supplied in varying thickness depending on customers desire for strength, flexibility, and resistance to air and moisture.
2. *Film Width.* The films can also be produced in numerous widths, which are custom cut to specific packaging needs.
3. *Type and Degree of Coating.* A large percentage of cellophane products are coated, generally on both sides of the film. These coatings increase the

cellophane's durability and seal qualities. Two of the major coating materials are poly(vinylidene chloride) copolymer (PVdC) and nitrocellulose (NC). PVdC offers more durability and higher moisture and gas barriers than NC. NC-coated films are typically used to package cookies, snacks, cheese, gum, and cough drops.

4. *Combination with Other Materials.* Cellophane film can be laminated to other films such as biaxially oriented polypropylene (BOPP) or metallized polyester film. These products offer enhanced qualities of both cellophane and the particular reinforcement material that is used. The end result is a flexible film that has excellent resistance to breakage and a high-quality appearance. Reinforced cellophane is used primarily to package pretzels, popcorn, chips, nuts, meats and cheeses.

PHYSICAL PROPERTIES

The physical properties of cellophane are closely related for all the film types. They are differentiated according to coatings, reinforcing structures, and thicknesses. All of them are clear with the exception of two of the reinforced structures: metallized polyester and white opaque polypropylene core.

The nitrocellulose-coated films range from 16,000 to 18,000 psi (lb/in.^{2}) tensile strength in machine direction and 8000–9000 psi in transverse direction. Elongation is 15–25% in machine direction and 30–45% in the transverse direction. The heat-sealable coatings have a wide sealing range, usually requiring temperatures of 225–350°F, depending on machine speed and pressure.

Water-vapor transmission rate (WVTR) for the moisture-proof film types averages about 0.5/100 in.^{2} per h, and the breathable types range between 30 and 50. Oxygen permeability averages about 2 mL/(100 in.^{2}) (24 h) (atm) for most two-side-coated nitrocellulose film types.

The PVdC- or saran-coated films utilize very similar and in some cases identical cellulose base sheets; but as previously described, the PVdC coating results in improved keeping characteristics.

Machine direction (MD) and transverse direction (TD) tensile strengths and elongations are roughly equivalent to the nitrocellulose-coated films. PVdC-coated films exhibit superior gas barrier properties to nitrocellulose coated films. Where the average oxygen barrier for nitrocellulose is about 2 mL/100 in. per h, the PVdC-coated films are about 0.5. Coefficient of friction is about 0.30–0.35 for both PVdC- and NC-coated films.

The third major type of cellophane film is plain, uncoated film. This film is used most widely in producing pressure-sensitive tapes and also for applications where high-quality printing is desired. This uncoated film prints most easily with almost any flexographic printing ink. The reason for this wide range of ink receptivity is that the surface being uncoated readily absorbs liquids.

CELLOPHANE PRODUCTION

Cellophane is a regenerated cellulose film derived from chemically purified wood pulp known in the trade as "dissolving pulp." Cellulose, the primary repeating molecule of regenerated cellulose film, is shown below:

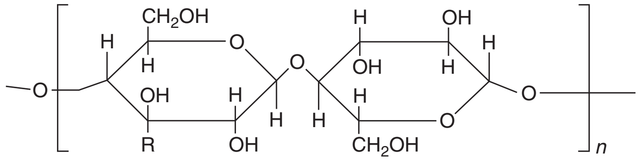

Cellulose

The cellophane production process involves five major steps: (*1*) soaking of the wood pulp in sodium hydroxide solution for several hours to form alkali cellulose; (*2*) polymerization of the alkali cellulose, under controlled conditions; (*3*) reaction of the alkali cellulose with carbon disulfide to form an alkali-soluble sodium xanthate; (*4*) formation of viscose by dissolving sodium xanthate in a solution of sodium hydroxide; and (*5*) extrusion of the viscose through a slit die into a water/sulfuric acid/sodium sulfate coagulating bath. After the regeneration of the cellulose, the process is completed by neutralizing, washing, and drying the film (3).

ENVIRONMENTAL ASPECTS

Packaging accounts for 30% of all solid waste by weight. The increasing cost of disposing solid waste has forced the adoption of new methods of packaging that promote recycling and degradability. Cellophane is made from cellulose, a component of plants and trees. Trees are farmed and harvested. No rainforest or old growth trees are used in the production of cellophane. Cellophane is 100% biodegradable. When buried, uncoated cellophane degrades in 28–60 days, coated cellophane degrades in 80–120 days. In comparison, the other packaging materials such as poly(vinyl chloride), polyethylene, poly(ethyl terephthalate), and polypropylene show no signs of degradation over long periods of time (1). Nevertheless, the polluting effects of carbon disulfide and other byproducts produced during the production of cellophane should also be considered.

BIBLIOGRAPHY

B. Jenkins, "Cellophane" in A. J. Brody and K. S. Marsh, eds., *The Wiley Encyclopedia of Packaging Technology*, 2nd edition, Wiley, New York, 1997, pp. 194–197.

Cited Publications

1. "Cellophane, "Pak-sel Corporation, Portland, OR, www.pak-sel.com, accessed February 2008.
2. S. Boriani and S. Negrini, U.S. Patent 7,131,247 (to G. D. Societa per Azioni), November 7, 2006.

3. J. N. BeMiller, “Carbohydrates” in *Kirk–Othmer Encyclopedia of Chemical Technology*, 5th edition, Wiley, Hoboken, NJ, 2004, p. 716.

CHANGEOVER OF PACKAGING LINES

John R. Henry

In the part, one popular soft drink was available in a single flavor, bottle and size. Changeovers were unknown. That same product today is available in over 100 variations. The company went from no changeovers to multiple daily changeovers. Most companies are in the same boat. They face more frequent and more changeovers as product variations proliferate. This trend is expected to increase into the future. Changeover is a key issue in the operation of almost every packaging line today.

This article will define and describe changeover and changeover time. It will also provide a roadmap and techniques to improve the quality of changeover while reducing the time lost to it.

Caution: While it is important to reduce changeover times, this must never be done by taking shortcuts that can jeopardize the safety of people, plant, or product.

CHANGEOVER

The words changeover and setup are often used interchangeably. This is a mistake because setup is only one component part of changeover. Changeover is defined as follows:

Changeover is the total process of converting a machine or line from running one product to another.

Note: Changeover can and often does take place on a single machine. In most instances it involves several machines that operate together to form a packaging or production line. The term “line” is used in this article for simplicity.

The key word in this definition of changeover is “total.” Changeover must include every task necessary for the conversion. Some of the tasks that may not be readily apparent are material handling to ensure that excess components, materials, and scrap are removed and disposed of. Documentation and line clearance are part of changeover as well. All of these tasks must be done correctly at the correct time.

It cannot be overemphasized that the changeover process includes everything.

As with many large concepts, it can help to subdivide changeover. One way to consider changeover is to break it down into the “three ups”: clean-up, setup, and start-up.

CLEAN-UP

Clean-up is the process of removing all product, material, components, and contaminants from the line. In some cases, this is very simple. A line filling hardware components into bags may require no cleaning at all other than removal of the previous nuts and bolts. In other cases, clean-up may be complex and time-consuming. The machinery in a sterile pharmaceutical filling line may need to be completely disassembled, washed, autoclaved, and tested for residual contamination in the laboratory. Meanwhile, the entire filling room will be washed from floor to ceiling, sterilized, inspected, and tested. Copious amounts of documentation are usually involved and must be considered part of changeover.

These examples represent extremes of clean-up. Most instances will fall in between.

SET-UP

Setup is the process of changing the line to accommodate the next product. It is mostly, but not only, the resetting of the machinery to the next product. This may be done via adjustment of machine components. An example is raising or lowering the turret on a capper to accommodate a different bottle size.

Different products may also be accommodated by the use of “changeparts” (Figure 1; also see Changeparts). Changeparts are product-specific machine parts. They should normally be designed to mount in a single, specific, fixed position with no adjustment in order to minimize variability in the setup. No tools should be required for mounting or dismounting.

Virtually all machines will have some settings made by changeparts and other settings made by adjustment. There is some disagreement about the relative preferability of changeparts versus adjustment. Some feel that emphasis should be on package-specific changeparts with no adjustment, whereas others feel that all machine components should be adjustable. There is some merit to both sides. Eliminating the need to make adjustments not only saves time, it eliminates the possibility that the adjustment will be made imprecisely or improperly. On the other hand, changeparts can be expensive, especially if there are many package sizes. The nonadjustability of changeparts can be a liability as well as a benefit. If components are at the high or low range of their specification, it is impossible to adjust the changeparts to accommodate them.

Setup may also include a number of tasks not directly related to machinery:

- Bring all the materials, including product, for the next run to the line.

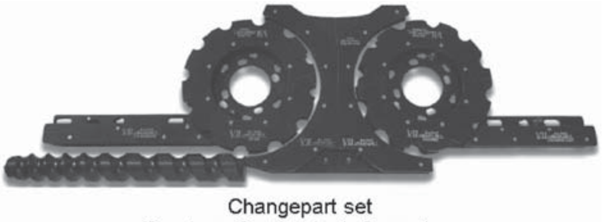

Changepart set
Courtesy Septimatech Group Inc.

Figure 1. Typical changepart set.

- Charge machines with product, components, and materials.
- Test the setup for correct fill volumes, label placement, and cap torque.
- Document the setup.
- Inspect the line and approve for production.

Once the final approval to run is obtained, the line must be brought up to speed. This is usually relatively brief and involves filling the line with production. In some cases, this must be done at a slow speed. Some bottles may have a tendency to fall down without other bottles nearby to support them. Some machine infeeds, timing screws, or starwheels may require manual assistance to get the initial products into them. Once the line has been fully charged and initially brought up to speed, setup is concluded.

START-UP

Start-up is sometimes called "run-up" or "ramp-up." It is the period of time between the end of setup and when the line begins operating at normal speed and efficiency. Start-up is characterized by frequent product jams, fine-tuning of machine adjustments, damaged product, and false rejection of good product, as well as nonrejection of bad product, line stoppages, and other abnormal conditions. In some plants, start-up time is negligible. In others, it takes longer than the rest of changeover combined. A few plants run entire production lots without ever getting out of start-up mode.

The cause of start-up can be described with one word: variability.

Variability comes in two forms. The most obvious in many cases is variability of the setup and occasionally clean-up. A too-frequent tendency in changeover is to perform an approximate setup and then fine-tune by trial and error once the line is running. One cause of this practice is the absence of the knowledge or tools to perform a precise setup. Each mechanic will have a different technique of setting up a machine. They will have different opinions about how tight a carton should be held in the cartoner lugs. They will guess at machine speeds (if tachometers are not provided) differently. Another cause is inadequate training and supervision. It must be noted that meaningful training is impossible if the proper setup specifications and tools are not available in the first place.

Variability can come from the product. The same liquid products may vary in characteristics such as density or foaminess from lot to lot. This may be impossible to predict in advance. If so, it means that the filler can never be completely set until actual product can be filled.

Packaging components and materials can vary. If hot melt glue comes from two different suppliers, or even two different plants of the same supplier, it may run differently depending on the source. This can prevent the glue system from being finally set until it is in production.

Paper products such as labels, cartons, and cases may vary in physical dimensions or they may vary in stiffness, depending on humidity levels during manufacture, transport, and storage. Again, this variability prevents a proper setup from being performed.

There is little that can be done on the packaging floor to avoid these problems. If the set-up is not under good control, it is often difficult to determine whether the startup is caused by variability of setup or variability of materials. If the changeover process, particularly setup, is brought under control, it becomes easier to focus on the material variability issues. If the amount of time lost due to material issues can be documented, it may be possible to justify obtaining better-quality materials with less variation.

The traditional definition of quality is usually expressed along the lines of "meets specifications" or "within tolerance." John S. McConnell does not think that is enough. In his book Safer than a Known Way (1) he defines quality as "absence of variation." It is consistency, not simply conformance to the range of a specification, which is required for success. This is as true of changeover as it is of any other process.

Start-up ends when the line is running at normal speed and efficiency.

Clean-up and setup can be simplified and shortened but can seldom be completely eliminated. Start-up exists because of variation; and, if variation can be eliminated, start-up will be eliminated as well. Total elimination will almost never be achieved in the real world. That does not make it any less worthy a goal to continuously strive for.

CHANGEOVER TIME

Changeover time is the key metric usually associated with changeover. It is defined as follows:

Changeover time is the total elapsed time between the last unit of good production of the previous product run, at full line efficiency, and the first unit of good production, at full line efficiency, of the succeeding product run.

Changeover time may be more compactly defined as "elapsed time between good products", provided that it is understood by all that this incorporates the normal speed and efficiency criteria of the full definition.

In some cases, a line must be slowed down before production actually stops. A liquid filler may, as the reservoir runs down, need more time to complete a fill cycle. This time of slower-than-normal production is called purgeout. It is when the line slows down or stops running at "full speed and efficiency" that the changeover clock must start. Likewise, the clock on changeover time cannot be stopped until the start-up is over. Marking the beginning of changeover time is generally fairly easy and obvious. Marking the end can be trickier.

One way is with a SCADA or other automated system that can display a graph of line performance. When the graph flattens, indicating a normal steady state, start-up is over.

Electronic counting displays that calculate and average line speeds over periods of time (5–15 minutes) can also provide good visual indication of when start-up has ended. When the extended average speed achieves target, start-up and changeover is complete.

Another technique is to end the start-up period when the line has run for 15 continuous minutes without stoppage or reject.

Still another technique does not measure start-up time directly but does give an indirect measure of how well the changeover has been done. This technique calculates how much product would normally be produced in 15 minutes (or some other period). Once the line has been fully charged and enters the start-up phase, the length of time it takes to produce that quantity of product is measured. As an example, a line may run at three cases per minute as measured at the discharge of the case packer. In 15 minutes of normal operation, the line should produce 45 cases.

If 45 cases are produced in the first 15 minutes, changeover has been done perfectly. If it takes 30 minutes to produce the first 45 cases, this indicates that time was lost due to start-up.

Graphing the time to the first 45 cases will provide a relative indication of how well changeovers are being performed.

This may not be as good a technique as direct measurement. However, it is simple and provides a good illustration of trends in start-up times.

The key is that start-up must be measured. If changeover time is defined only by clean-up and setup, because they are easy to measure, there will be a tendency to perform these more quickly and imprecisely at the expense of extending start-up and overall changeover time.

It is the elapsed time that is important to the changeover time metric, not the total labor hours used. Labor time is relatively inexpensive, measured in tens of dollars per hour. Line downtime is very expensive and measured in hundreds, thousands, or even tens of thousands of dollars per hour. The goal of changeover must be to get the line up and running again in the shortest possible amount of time.

CHANGEOVER COST

Downtime from changeover is expensive. Many plants do not even know how expensive because they have never calculated the cost. Some plants that have calculated it count the cost in hundreds of dollars per hour. Most plants that have calculated it find it to be thousands of dollars per hour. These calculations need to be done, and they need to be done by the finance department. It needs to be calculated because management needs to know its costs. It needs to be calculated to enable cost-benefit analysis for improvement. It needs to be calculated by the finance department, rather than the engineering or packaging department, because only calculations by finance are “official” and readily accepted throughout the company.

Changeover costs can be divided into two broad categories, tangible and intangible:

Tangible costs are those for which it is relatively easy to calculate a monetary value. They include lost production output, lost capacity, direct labor, and lot size and inventory effects. Not all will apply in all plants, and different factors will differ in importance from plant to plant. The plant that is operating at 100% capacity will value lost output differently from the plant operating at 75% capacity. For one, the sale of the unproduced product is lost and gone forever. For the other, the lost production can be made up, perhaps with overtime, and may not represent lost sales.

Intangible costs are those costs that are difficult or impossible to value in monetary terms. Perhaps the most important is responsiveness to customers. If extended changeover times inhibit meeting a customer’s changing demands, there is certainly a cost for that even if it is not easily measured.

If unnecessary time is lost on changeover, this allows less time for maintenance and forces the team to work harder to produce. This causes stress on machines and on people. The time consumed by lengthy changeover also reduces the time available to develop and implement improvement ideas.

In addition to the costs mentioned above, different plants and industries may have other costs not shown.

However measured, changeover time is expensive. Reducing it is critical to any company’s long-term strategic health.

REDUCING CHANGEOVER TIME

The first thing to realize about reducing changeover time is that it requires participation by everyone in the company, not just the packaging team (Figure 2).

The primary effort must come from them, it is true, but if they reduce line changeover from two hours to one and quality still takes two hours to sign off the line clearance, nothing has been gained. Marketing/package design must be involved. Sometimes minor changes in product design can have a major impact on changeover time. If families of bottles are chosen with common footprints, varying height for volumes, changeover times can be reduced significantly.

Human resources may need to review and modify job descriptions. Engineering must provide various services as well as reviewing improvements before they are put into practice. The safety department must make sure that safety is never jeopardized, and so on. There is no department that does not have some role to play.

It should go without saying that top management support is vital. They must provide moral support by making changeover reduction a priority. They must also provide material support as necessary. Without management support, no changeover program can succeed. With it, it cannot fail.

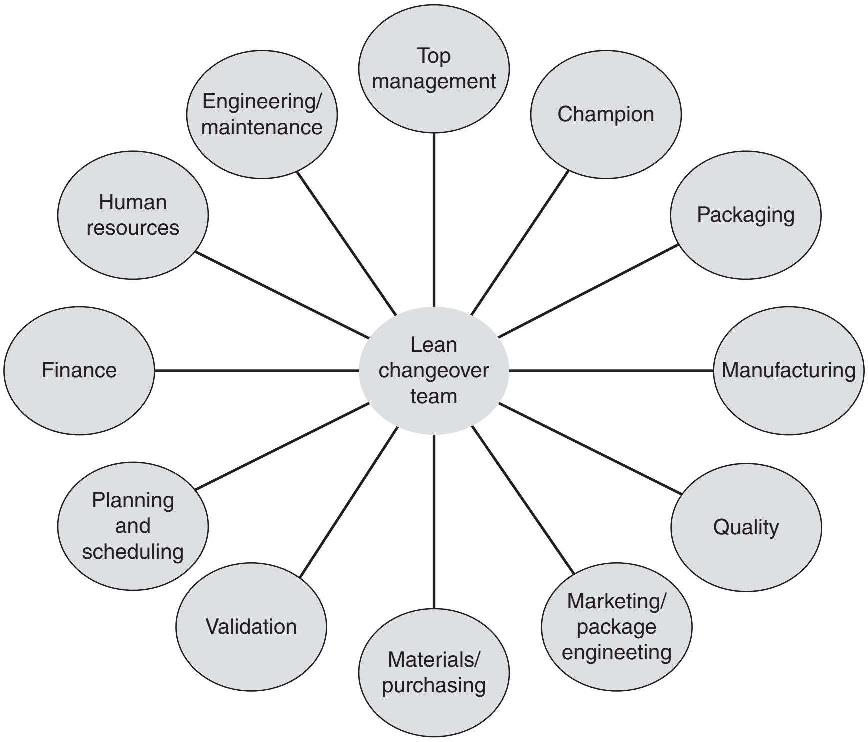

Figure 2. Lean changeover team members.

CHANGEOVER TIME REDUCTION

Changeover reduction can be accomplished using a four-step process expressed by the acronym ESEE (pronounced easy). ESEE stands for eliminate, simplify, externalize, exactly. The acronym establishes the priority order of the four steps, but these are not set in stone. It might be that changeover can be eliminated by package redesign. This may be a good idea but a long-term project. While changing the package, benefits from simplifying, externalizing, or making measurable changeover tasks must not be ignored.

ELIMINATE

It makes no sense to improve something that does not need to be changed at all. The first step in reducing changeover time is to identify those tasks that can be eliminated.

One common task is the application of shipper labels to a corrugated case. In many instances, the label is placed in the center of the case. This satisfies the natural human urge toward symmetry, but it is hardly necessary for identification or, in most cases, for aesthetics. If the label is centered on the case, it means that each time the case size changes, the labeler must be reset.

It may be possible to relocate the label to a common position, relative to the lower leading corner of the case. If this can be done, it eliminates any need to reset the labeler during changeover.

A pouching machine has a cutoff arm controlled by a cam. This arm and cam must be adjusted for three pouch sizes. The original 3/4-in.-wide cam was replaced with a custom-made cam of the same profile but 3 in. wide. The additional width eliminated the need to reposition the cam during changeover. This eliminated the need for a mechanic, allowing the length to be changed, toollessly, by an operator. This freed the mechanic to perform more valuable tasks.

Some larger machines may require ladders for access to some adjustments. Time will be spent looking for the ladders. Worse, instead of using ladders, a chair may be used, creating a safety hazard. Ladders, platforms or step plates incorporated into the machine eliminate the need to fetch ladders.

Electronics can eliminate changeover tasks. Traditionally packaging machines have been built with a single, relatively large motor (Figure 3).

This would power the various machine functions we connected through an often elaborate system of shafts, belts, chains, and gears. Changeover involves physically adjusting timings or changing gear sets for the next size. Some newer packaging machines replace the linkages from the main motor with smaller servo motors at the point of use. These are controlled and operating parameters are changed, via software. Many of the physical adjustments have been eliminated.

Cleaning can be eliminated or greatly reduced by modifying machines to eliminate areas that catch dust and dirt. Instead of mounting a filler on a closed cabinet that must be cleaned internally, it may be mounted on an open frame constructed of tubular stainless steel. If this is not possible, at the very least the cabinet should be thoroughly sealed to minimize or eliminate the need to clean inside.

SIMPLIFY

All changeover tasks that cannot be eliminated must be simplified to the maximum degree possible. Simplification

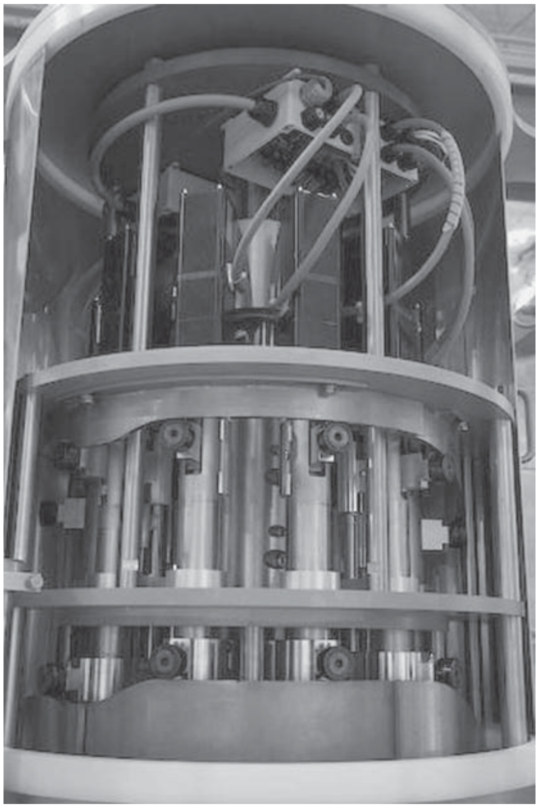

Figure 3. Servo driven capping chuck, with permission from Elau Inc.

is thought of as applying mainly to the setup portion of changeover. That is important, but it applies to clean-up as well as other areas such as documentation and material handling.

Older home cooking ranges have individual burners that can be time-consuming and difficult to clean. Newer ranges have a flat ceramic surface that can be easily wiped clean in a single motion. This concept can be applied to machinery by replacing exposed nuts, with acorn nuts and replacing exposed hex head bolts with round head bolts or, better, flat-head bolts. These provide a smoother surface, easier to clean (Figure 4).

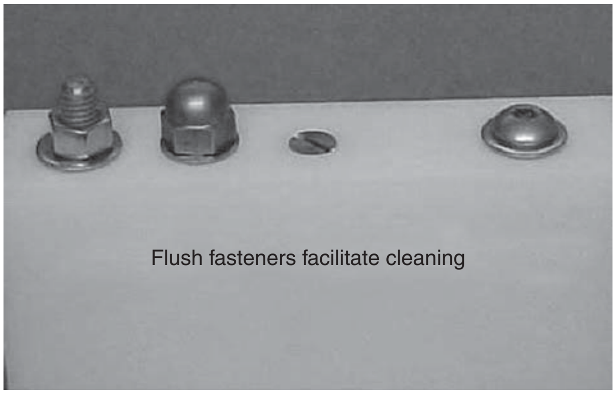

Figure 4. Flush surfaces simplify cleaning.

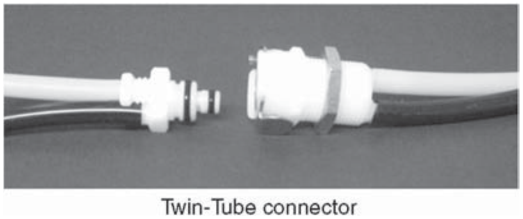

Figure 5. Multiple tube connector.

If walls need to be wiped down during cleaning, systems designed to facilitate this should be provided rather than relying on rags and buckets.

Adequate and appropriate tools are a must. If mechanics do not have the right tool when they need it, time is lost searching for it. Lack of the correct tool, readily available, increases the temptation to use the wrong tool, such as pliers. Improper tool usage not only causes delays, it frequently damages the machine so that every future changeover is delayed. Each machine should have a shadow board with the correct tools needed for changeover. The shadowboard should be located on or inside the machine for maximum convenience.

Repetitive operations, where a large number of fasteners need to be loosened or removed, may benefit from the use of power tools. Pneumatic or battery-powered wrenches or screwdrivers should be permanently mounted at the point of use with the appropriate bit or wrench.

Ideally, no tools at all should be used in changeover. There are a number of devices that can be used to substitute for bolts or other fasteners. These include handknobs and handlevers, toggle clamps, cam locks, magnetic, pneumatic and vacuum fixturing devices, and various types of pins.

When pneumatic, fluid, or electrical connections need to be made, they should be made by quick connects with multiple inputs. A pneumatic cylinder requires two air connections. If a dual quick connector is used, it not only cuts connection time, it also makes it impossible to connect them backwards. Connectors are available that allow simultaneous connection of multiple electrical, control, pneumatic, and fluid supplies (Figure 5).

Photoeyes can be time-consuming and difficult to reset between products. Multiple photoeyes, one for each product, should be permanently mounted and adjusted. Changeover goes from requiring positioning and adjustment of a photoeye by a mechanic to turning a selector switch by an operator. Depending on the machine, this may be done automatically via the PLC (Figure 6).

Einstein said: “Imagination is more important than knowledge.” Simplification of changeover is a good place to turn creative imaginations loose.

EXTERNALIZE

Changeover tasks can be broken into two categories: internal and external. (These are sometimes called intrinsic and extrinsic.) This concept was first described by Japanese industrial engineer Shigeo Shingo after he had been tasked

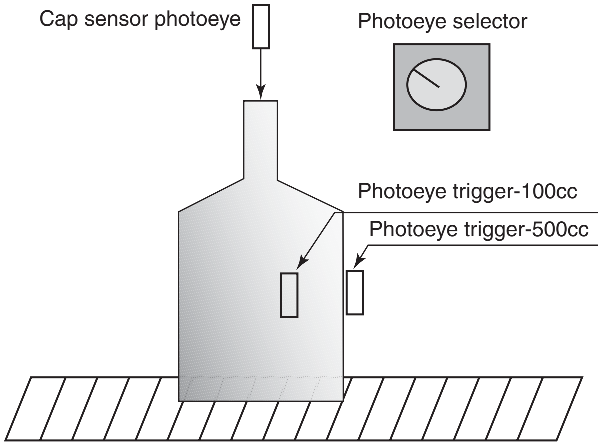

Figure 6. Multiple photoeyes with selector switch.

with reducing changeover times on stamping presses at Toyota. Shingo documented this in detail in his book A Revolution in Manufacturing: The SMED System (2).

Internal tasks are those that are performed when the line is stopped. External tasks are those that are performed while the line is running. In almost every changeover process, it is possible to find tasks that may be shifted from internal to external. They can be performed either before or after changeover while the line is running.

One example is cleaning of the pumps on a liquid filler. If only a single set of pumps is available, these must be removed, cleaned, and reassembled before changeover is complete. This may extend total changeover time. If there is an additional set of pumps, the “dirty” set may be removed and set aside, and the clean set can immediately be mounted. After the line has restarted, the other set of pumps is cleaned and stored in readiness for the next changeover.

Managements may object to spending money on an additional set of pumps. They can be expensive, perhaps \$5000–10,000 per set or more. This is why it is critical for the plant to know the costs of changeover downtime. It is difficult for management to justify the expenditure of dollars to save minutes. It is comparing apples and oranges and can’t be done in any meaningful way.

If costs are known, a cost–benefit analysis is simple. If having an additional set of pumps saves 15 minutes per changeover and changeover cost is \$2000/hr, the pumps save \$500/changeover. If the set cost \$5000, the payback is 10 changeovers. If changeover is daily, this is a two-week payback.

Other opportunities for externalization include:

Install additional liquid product transfer piping from the formulating area to the line can be equipped with clean-in-place (CIP) systems (Figure 7). This allows one transfer line to be cleaned while the other is in use.

Organize changeparts and materials required for the next run prior to the end of the current run. These should be staged as close to the line as possible.

Prepare documentation, such as line clearance, setup sheets, batch records, production orders, and the like, during the current run.

Change out instead of changing over machines. At least one labeler manufacturer builds machines in which the entire labeling head is mounted on rollers. It is disconnected from the labeler base, and rolled out; and a different head, which is cleaned and changed externally, is rolled into place. Several manufacturers of fillers do the same.

EXACTLY!

The key to successful changeover is eliminating variability from the process. This means that changeover must be

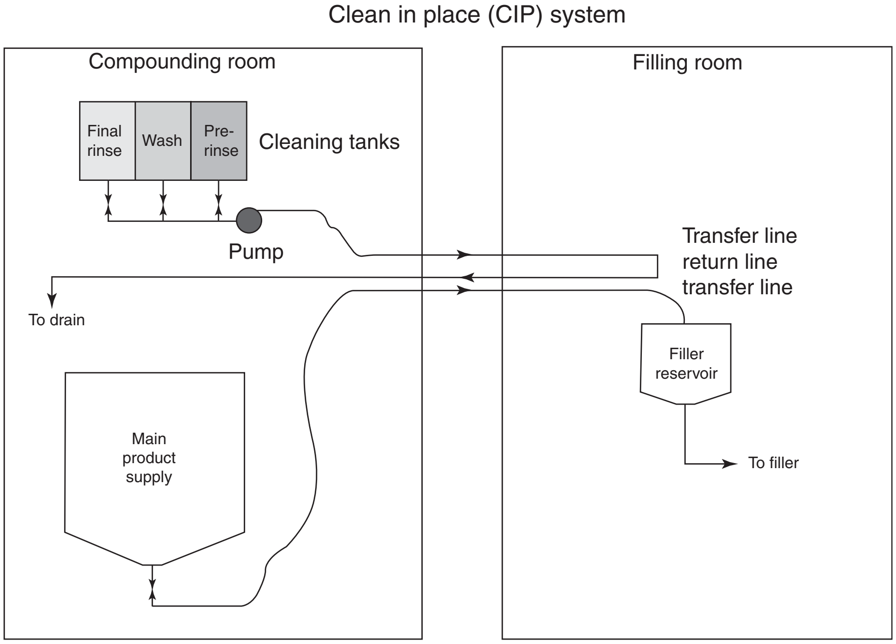

Figure 7. Clean-In-Place (CIP) system.

performed exactly the same way, to the same settings every time. There are two components to this. The first is to completely describe and document what is to be done during changeover and how. The second is to provide measurable and repeatable setpoints for each required adjustment. Neither is of much use without the other.

The document describing the changeover process is often called a Standard Operating Procedure (SOP) but will have various names in different companies and industries. In addition to the SOP, or as part of it, a checklist should be provided. The SOP describes, in great detail, exactly how the changeover is to be carried out. It should include a list of parts and materials required, safety precautions to be taken, and tools to be used. It will include, often as in tabular form, a complete list of all setpoints for each product and size. Annotated photographs or diagrams should be incorporated as needed for maximum clarity. In short, the SOP should be detailed enough that a person with minimal training will be able to successfully perform a changeover using it. This document will often be too cumbersome for daily use. If it is not used, variation in the setup will invariably result. To ensure daily use, an abbreviated checklist is required in addition to the SOP. This should be a one- to three-page document detailing what is to be done. It assumes that the person is trained, so there does not need to be much detail as to how it is to be done.

One way to achieve this is to write the SOP as an outline in MSWord. The major headings are the what items with the subheadings covering the how. Once complete, a table of contents can be generated showing the major headings. This becomes the checklist.

There are many other formats that will work, and some companies will have existing formats that must be used. The important thing to bear in mind is that if the process for changeover is not written down, changeover cannot be done the same way twice. If supervisors and managers do not continually make sure it is being followed, changeover will not be done the same way twice.

The SOP will tell how the changeover is to be performed and will document the setpoints for each adjustment. This is a good start but not enough. If the tools are not available to reliably achieve those setpoints, the SOP cannot be reliably performed.

All adjustments must have easy and foolproof means of measurment. These may be as simple as scribe marks on the machine. These work but are not generally recommended. They can be a source of confusion as they build up over time. Obsolete scribe marks are difficult to remove.

Scales, denominated in inch or metric, can be another tool. The scale by itself is not enough, there must be a good pointer to go with it. Where scales are used, they should be in either metric or decimal inch because fractional scales can be difficult to read.

Digital indicators are available in a variety of styles. If properly applied and mounted, they are rugged and easy to read. The advantage to digital indicators is that they are much harder to misread or misinterpret than the scale (Figure 8).

Figure 8. Digital position indicator.

Gauges, unless they are permanently mounted to the machine, should be avoided. They can be easily mislaid. When that happens, the machine will be adjusted, imprecisely, by eye. Gauges can be permanently mounted in several styles such as a leaf gauge. This consists of several gauges, hinged by a pin in a common mounting block. In use, the appropriate gauge leaf is swung up and the machine is adjusted to touch (Figure 9).

Temperature, pressure, time, and other settings should be made using digital rather than analog controllers for the least chance of error.

Speed is a critical parameter that is often not measured. Conveyor speeds may be set based on the position of a single-turn potentiometer. Tachometers are a must on all machines, including conveyors. The optimal speed of each machine must be noted in the SOP and set during changeover.

It is only be providing the capability of performing all changeover tasks exactly that variability can be reduced or eliminated.

OVERALL OPERATIONAL EFFICIENCY (OEE)

OEE is used in many plants to measure and compare line efficiency. It is the product of performance, availability, and quality. One way to improve OEE is to reduce variability in changeover. Reducing changeover variability impacts all three components.

Performance is improved because better changeovers result in smoother running machinery. Smoother running machinery will result in fewer minor stoppages.

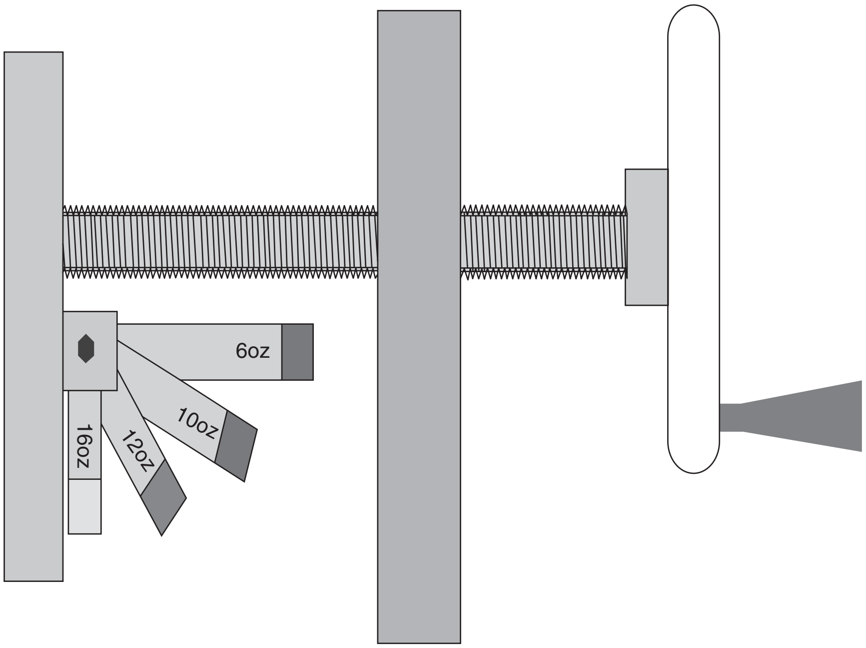

Figure 9. Leaf gauge.

Availability is increased because better changeovers will take less time.

Quality is doubly improved. Properly adjusted machinery produce more closely to target parameters as well as reducing the amount of rejected product.

Changeover of packaging lines has grown greatly in importance in recent years. It will continue to do so as the number and variety of products demanded by the market increases. Ever-increasing competitive pressures mean that it can no longer be ignored or treated as simply a necessary evil. A company with reduced changeover times will have a significant market advantage over companies with long changeovers.

Changeover must be viewed as both a tactical and a strategic competitive opportunity.

BIBLIOGRAPHY

1. John S. McConnell, *Safer than a Known Way*, 2nd edition, The Delaware Group, 1988.
2. Shigeo Shingo, *A Revolution in Manufacturing: The SMED System*, (Productivity Inc., Portland, OR, 1985.

CHECKWEIGHERS

Automatic, in-line checkweighers have long been used to perform basic weight-inspection functions. These units, as distinguished from static, off-line check scales, perform 100% weight inspection of products in a production process or packaging line. Furthermore, these machines perform their functions without interrupting product flow and normally require no operator attention during production.

These charactertistics allow the machines to be used in several different ways. The applications can be broadly categorized as weight-regulation compliance, process control, and production reporting. This article describes a number of checkweigher applications in these categories. The emphasis is on problem solutions and benefits, although some description of the machine hardware and features employed is necessary.

WEIGHT-REGULATION COMPLIANCE

The earliest use of in-line checkweighers was to help producers guard against shipment of underweight products, and today various regulatory agencies set standards for weight compliance of packaged goods. Most of these standards are adopted from recommendations made by the National Bureau of Standards (NBS) in their various handbooks. In general, these standards recommend that the average product weight shipped by the producer be equal to or greater than the declared weight and that no unreasonable underweights be shipped. The in-line checkweigher provides assurance to the producer that these general requirements are met. With proper adjustment of checkweigher and process, an additional benefit of reduced product giveaway can be enjoyed.

The equipment required to carry out the basic weight-compliance requirement consists of a weighing element (weighcell), associated setup controls and indicators, a product transport mechanism for continuous- or intermittentmotion product movement, and a reject device for diverting off-weight items out of the production stream. A typical machine comprising these elements is shown in Figure 1.

The central portion of this machine shows a weighcell consisting of a strain-gauge loadcell that is connected to the integrally mounted electronics enclosure. Associated

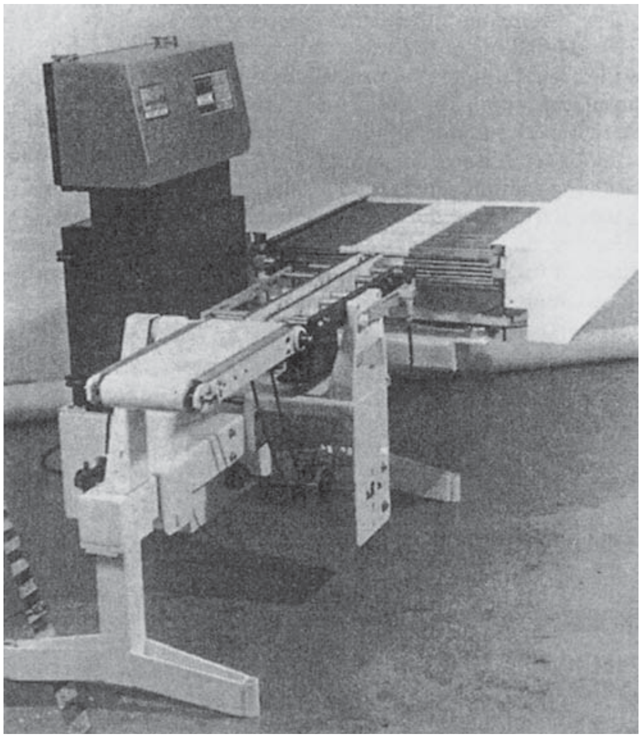

Figure 1. A typical checkweigher.

with the weighcell is a product transport, in this case consisting of a pair of stainless-steel roller chains. Shown on the left (upstream) side of the unit is an infeed belt conveyor, which serves as a product-spacing (speedup) device and ensures that only one product at a time passes over the weighcell. On the right (downstream) side of the unit is a channelizer product-reject device. This unit receives signals from the checkweigher and provides a gentle lateral displacement of rejected product by carrying it to the side on sliding carrier plaques. Other commonly used reject devices include air blasts, air pushers, swing gates, and drop-through mechanisms.

Rejection of underweight products (and in some cases overweight products, such as critical pharmaceutical packages or expensive products) provides the required consumer protection. The added benefit to the producer of reduced product giveaway frequently provides additional incentive to install the checkweighing machine. The information from the typical modern checkweigher allows the producer to control the target weight of the process and ensures minimum average product weight, and it minimizes rejected underweight products. The following application example illustrates these points.

New-Contents Weight. Company A prepares a variety of expensive frozen-food products. These products are clearly labeled showing net-contents weight and come under close scrutiny from regulatory agencies. Some ingredients, such as chunky pieces, are of somewhat nonuniform piece weight. Until an accurate in-line checkweigher was installed, the producer was forced to overfill most packages to prevent underweight shipments. The company installed a number of checkweighers that provide the required controls. Now, by means of digital displays and easily adjustable reject cutpoints on the checkweigher, the processor is able to closely monitor the filling process and establish the best compromise between product giveaway and excessive rejects.

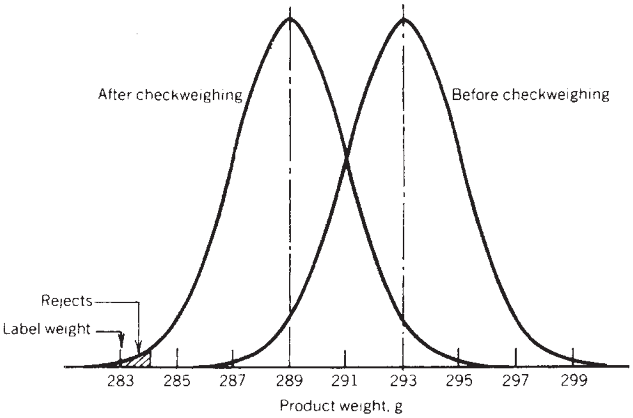

Figure 2. Weight distributions before and after checkweighing.

Product-Weight Distribution. Figure 2 illustrates a typical product-weight distribution curve before and after a suitable checkweigher is installed.

Before checkweigher installation, the mean product weight was maintained at approximately 293 g to ensure against underweight shipments. After checkweigher installation, the mean product weight is reduced to approximately 289 g. This results in less than 1% underweight rejects but saves an average of 4 g per package. The economics of this checkweigher installation is illustrated below:

Package labeled weight	283 g
Average overweight per package	10 g
Possible reduction in average overweight	4 g
Annual production	900,000 kg
Value of product	$0.75/kg
Cost of checkweigher (including freight and installation)	$10,000
RESULTS	
Product savings	1.4%
Product saved per year	12,720 kg
Savings per year	$9540
Payback period, approx.	1 yr

PROCESS CONTROL

Many products that are sold on the basis of a declared (labeled) weight are packaged by a volumetric filler or count or other nongravimetric processes. These processes frequently yield products of varying weight because of product density changes. Density changes typically occur with hygroscopic products under conditions of changing humidity. Also, material-handling methods can cause bulk-density changes in other products. Frequently, the

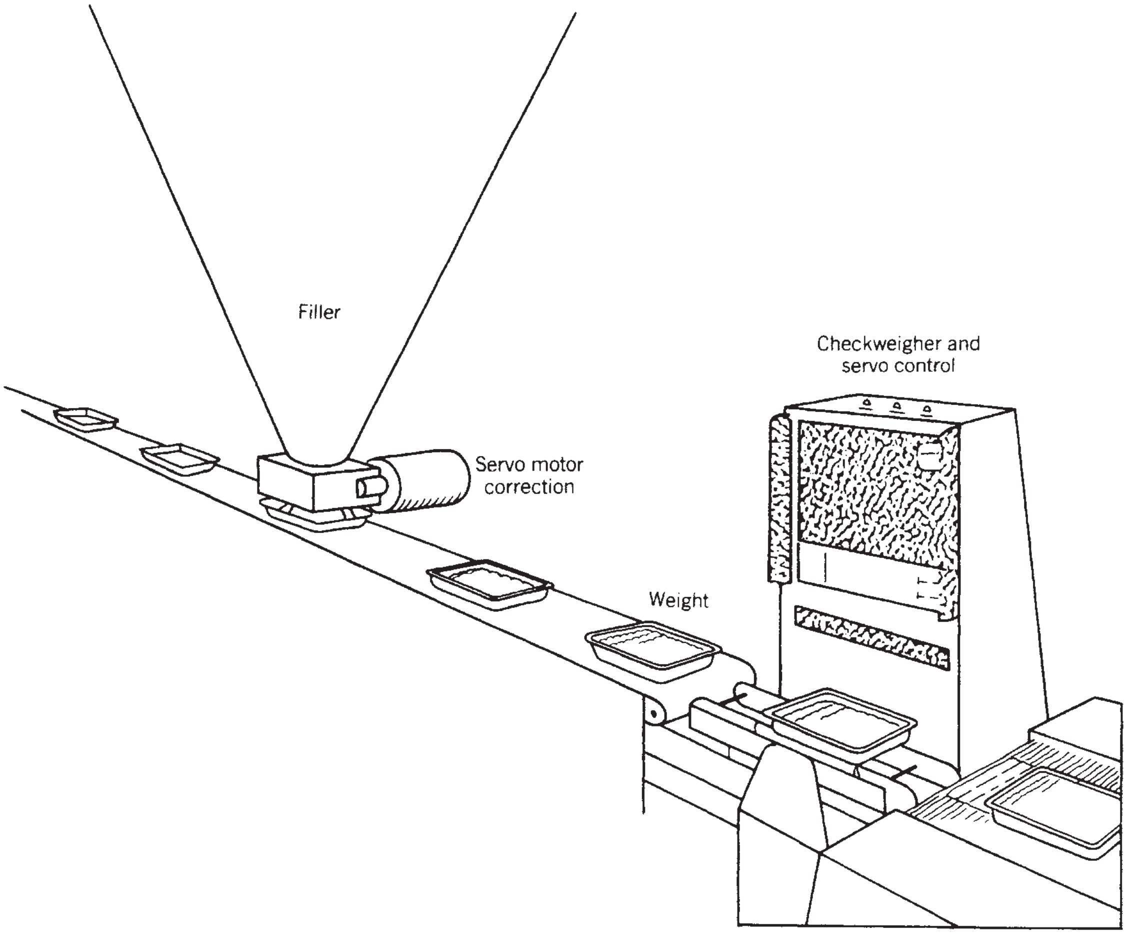

Figure 3. Checkweigher feedback-control to filler.

density changes occur in the form of a drift or periodic change. These changes lend themselves well to automatic-feedback control from a weight sensor (checkweigher) back upstream to the process controller. Figure 3 diagrams a checkweigher/filler feedback-control system.

This feedback loop continually adjusts the process setpoint and maintains delivered product weight within acceptable limits, even under conditions of density variations. These adjustments in turn reduce the long-term weight standard deviation of the packaged products. This allows the process setpoint to be set at a lower average value while minimizing the number of underweight (rejected) packages. The result is product savings. Two applications are described to illustrate the use of checkweighers with feedback for process control.

Feedback Control. Company B packages a low-density, hygroscopic product using a volumetric filler. Spot checks revealed that moisture variations from batch to batch and humidity changes throughout the day resulted in substantial density changes. These changes often went unnoticed until a large number of off-weight packages were produced, which caused either excessive product giveaway or an excessive number of underweights being rejected by the old checkweigher. In the former case, the giveaway represented considerable revenue loss and in the latter case resulted in product waste due to the impracticability of recycling and repackaging the rejected product.

The company purchased a replacement checkweigher equipped with feedback-control features for signaling their existing filler. The checkweigher is located as close as possible to the filler to achieve maximum responsiveness of the feedback loop. In this case, the feedback signals are electronically adjusting the setpoint of the filler. However, other control arrangements are possible that include signaling a servo motor attached directly to the control shaft of a filler. This company was able to justify purchase of the checkweighing system solely on the basis of product savings. Figure 4 illustrates how long-term standard deviation reduction allows lowering of average setpoint with resultant product savings. Short-term standard deviation that results from package-to-package filler errors is inherently beyond the control capability of the checkweigher.

Company C packages sliced luncheon meats. The “stick” or “load” of luncheon meat is fed through a slicer that counts a preset number of slices per draft to be packaged. Because of density changes of the meat, the correct slice count did not always yield the declared weight of the draft within allowable limits. With no on-line way to detect these

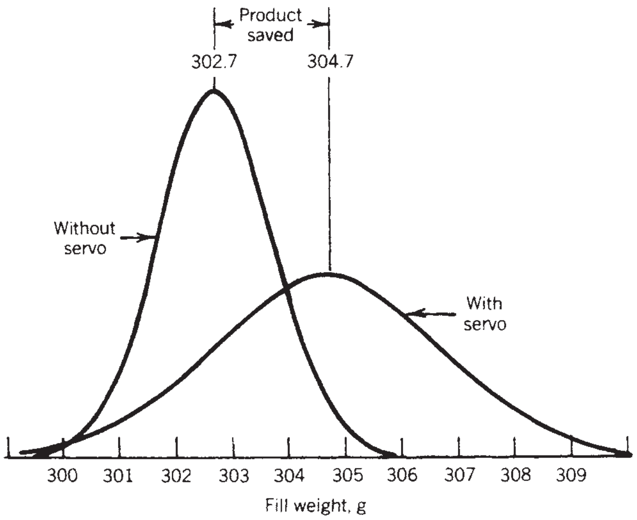

Figure 4. Filler setpoint reduction with servo system.

density changes, the company had to supply an extra number of slices to ensure labeled weight or take a chance on packaging underweights with correct slice count. It installed an in-line checkweighing machine that very accurately weighs each draft of sliced meat just after it leaves the slicer. Error signals, which represent departures of delivered weight from target weight, are fed back to the slicer controls. The controls in turn cause slice thickness to be adjusted so that the preset slice count results in correct draft weight within very narrow limits. The result was control over the slicing process that economically justified the checkweigher quickly.

PRODUCTION REPORTING

Automatic production reporting by a checkweigher can provide running analysis of packaging-line performance. Checkweigher-generated production data can be transmitted to printers, computers, terminals, and other data receivers. Whatever the reporting medium, the result is virtually instantaneous indications of production-line performance or automatically kept records of production data. Productivity gains and material savings result from such uses. Here are two applications of the checkweigher for production recording:

Company D requires that a statistical sampling procedure be carried out on each of its production lines. Historically, quality assurance personnel periodically removed a number of product samples from the production line, weighed them on manual scales, recorded the weights, and returned the samples to the production line. Using the raw data they had collected, quality-assurance personnel manually calculated statistical information about the samples. From this information, they prepared a product sampling report. Because of the frequency of the sampling procedure and the number of lines involved, a full-time quality-assurance (QA) person was employed to perform this task. Furthermore, the manual nature of the weighing and recording resulted in reports of questionable accuracy.

Microprocessor-Controlled Checkweigher. The company purchased a modern microprocessor-controlled checkweigher that is capable of accumulating production-weight data in real time and performing the required sampling calculations for transmission to a printer in the QA supervisor's office. Data reported to the supervisor include data and time of report, product code, operator identification number, average weight, standard deviation, and total weight for both accepted and rejected product over the selected sample size. Additionally, verification of checkweigher setup parameters, such as target weight and reject cutpoint settings, are recorded. Installation of the checkweighing system results in cost savings in personnel for acquiring the sample data and virtually instantaneous feedback of production data to QA and production personnel.

Company E ships large quantities of product to customers for further processing. To corroborate material-amount reports between supplier and customer, accurate total production records were required. In addition to actual weight of shipped product, an accounting of underweight (rejected) packages would yield important production-efficiency data.

The company installed an automatic checkweighing system and appropriate data-collection capabilities along with a printer for location in the accounting office. On command, accumulated data are transmitted from the checkweigher to the printer, which provide subtotals and totals of average weight, total weight of product shipped and rejected, package counts, and a figure for "yield" (shipped product divided by total production) on the basis of both weight and package count. The result of this installation is a true and accurate summary report for the accounting department of product shipped to each of their customers, thereby minimizing protests. The additional benefit is a more accurate report of actual production efficiency.

The application examples presented here describe a few of the many kinds of packaging lines that can and should benefit from the use of in-line automatic checkweighers. A few additional applications are suggested below:

- Piece-count verification in packages and cases
- Product-safety assurance by detecting undesirable underfills or overfills
- Multizone classification of natural products such as chicken parts, fish, etc.
- Detection of missing components in "recipe" food packages
- A survey of product weights in any processing/packaging line may reveal opportunities for substantial cost savings through use of an automatic checkweigher.

BIBLIOGRAPHY

"Checkweighers" in J. F. Jacobs ed., *The Wiley Encyclopedia of Packaging Technology*, 1st edition, Ramsey Engineering Company, Icore Products, pp. 163–166.

General References

C. S. Brickenkamp, S. Hasko, and M. G. Natrilla, *Checking the Net Contents of Packaged Goods*, National Bureau of Standards, Washington, DC, 1979.

C. Andres, "Microprocessor-Equipped Checkweighers," *Food Process*. **40**, (1979).

C. Andres. "Special Report: Expanding Capabilities of Checkweighers," *Food Process*. **42**, (1981).

N. W. Rhea, "Are You Ready For Checkweighing?," *Mater. Handl. Eng*. **5**, (1983).

Automatic Checkweigher Test Procedure, Scale Manufacturers Association, Inc., Washington, DC, Jan. 1977.

"Checkweighing Scales," *Mod. Mater. Handl*. **37**, (1982).

U.S. Department of Commerce/National Bureau of Standards, *NBS Handbook 130, 1979* (*Draft*), U.S. Government Printing Office, Washington, DC, 1979.

U.S. Department of Commerce/National Bureau of Standards, *NBS Handbook 133, Checking the Net Contents of Packaged Goods*, U.S. Government Printing Office, Washington, DC, 1981.

U.S. Department of Commerce/National Bureau of Standards, *NBS Handbook 44, Specifications, Tolerances, and Other Technical Requirements for Commercial Weighing and Measuring Devices*, (4th edition), U.S. Government Printing Office, Washington, DC, 1976.

CHILD-RESISTANT PACKAGING

Richard Ward
Perritt Laboratories, Inc.,
Hightstown, New Jersey

Child-resistant (CR) packaging, a term synonymous with poison-prevention packaging (PPP) and special packaging (SP), is defined as "packaging that is designed or constructed to be significantly difficult for children under 5 years of age to open or obtain a toxic or harmful amount of the substance contained therein within a reasonable time and not difficult for normal adults to use properly" (1). This can include hazardous substances such as drugs, household cleaning agents, and pesticides. Packaging of this nature may take a number of forms, including bottles, drums, pouches, and blister packs. Many children have been saved from bodily harm and even death as a result of CR packaging.

HISTORICAL ASPECTS

Designs for CR packaging can be traced back to 1880, when the first U.S. patent was issued for a CR package. The U.S. Congress began to take direct interest in 1966, in response to public concern about the large number of children gaining access to harmful substances in the home. As a result of Congressional hearings that year, the commissioner of the FDA appointed Dr. Edward Press to be chairman of a committee to review the "state of the art of safety packaging." The Press committee, as it came to be known, comprised members from U.S. industry and government. The committee reviewed the 63 patents on CR packaging that had been awarded between 1880 and 1966 and decided that the most realistic and practical approach to this problem was to establish a performance standard, using children to test the units. A series of closure studies was conducted, involving more than 1000 panelists: adults from 18 to over 65 years of age and children between the ages of 18 and 52 months. From the data obtained in these studies, a protocol to evaluate child-resistant packaging was derived. This protocol, submitted to the FDA in 1970, is reflected in the protocol cited in the Code of Federal Regulations (CFR) (1), with the exception that the Press committee protocol contained two 3-min test periods for adults, one before a demonstration and one after a demonstration. The FDA-revised protocol, as it appeared in the CFR, cited one 5-min test period for adults without a demonstration. This was later changed in 1995 to a 5-min, 1-min test (2).

The U.S. Poison-Prevention Packaging Act (PPPA), signed into law December 30, 1970, was under the jurisdiction of the FDA. The protocol for the evaluation of poison-prevention packaging appeared in the Federal Register in July 1971 (3). FDA standards began to appear in the Federal Register in 1972, first for aspirin and then for controlled drugs, methyl salicylate, and furniture polish. In May 1973, jurisdiction was transferred from the FDA to the newly formed U.S. Consumer Product Safety Commission (CPSC), and additional products came under regulation. The CPSC was given the responsibility for medicines and household substances, and in 1979 the U.S. Environmental Protection Agency (EPA) was delegated to administer the compliance of pesticides.

Household pesticides of a hazardous nature were regulated in March 1981 (4). The initial EPA regulation was more stringent than the CPSC regulation, but much of the initial draft regulation was deleted to a point where the EPA regulation (5) approximates the CPSC regulation regarding testing requirements and standards. The major difference between the two regulations, at this point, has been that the CPSC regulation makes provisions for a noncompliance package that can be used by older adults and/or households without children, and the EPA regulation does not.

EFFECT OF REGULATION

As of 2007, there were 31 substances regulated by the CPSC. They are listed in Table 1. Regulations were placed on these substances because of their harmful nature to small children and the large number or severity of incidences of ingestions noted. The substances appear in this table by virtue of the ingestion patterns they have demonstrated from the data generated by poison-control centers located in the United States and compiled by the CPSC. Because of the increased sophistication of data collection since the government began collecting this information, in some cases it is difficult to measure actual reductions in ingestions by children. However, it was

Table 1. Regulated Substances—CPSC

Aspirin	>45 grains
Furniture polish	≥10% petroleum distillates
Methyl salicylate	>5% by weight
Controlled drugs	All oral forms
Na or K hydroxide	≥10% by weight
Turpentine	≥10% by weight
Kindling and illuminating preparations	≥10% petroleum distillates
Methyl alcohol	≥4 by weight
Sulfuric acid	≥10% by weight
Prescription drugs	all oral forms
Ethylene glycol	≥10% by weight
Iron-containing drugs	≥250 mg elemental iron
Dietary iron supplements	≥250 mg elemental iron
Solvents	≥10% by weight
Acetaminophen	>1000 mg acetaminophen
Diphenhydramine	>66 mg diphenhydramine
Glue removers	>500 mg acetonitrile
Permanent-wave neutralizers	>600 mg Na bromate >50 mg K bromate
Ibuprofin	>1000 mg ibuprofin
Loperamide	>0.45 mg loperamide
Lidocaine (April 10, 1996)	≥5 mg
Dibucaine (April 10, 1996)	≥0.5 mg
Mouthwash (ethanol)	≥3 g
Naproxen sodium (February 6, 1996)	≥20 mg
Ketoprofen	>50 mg
Fluoride	>50 mg elemental fluoride + >0.5% elemental fluoride
Minoxidil	>14 mg
Methacrylic acid	>5%
OTC drugs	From prescription drug
Low-viscosity hydrocarbons	10% or more by weight and viscosity >100 SUS at 100°F

possible to present comparative ingestion data up until 1982 showing considerable ingestion reductions in many regulated products, with reductions of up to 86% as shown in Table 2. Currently, tables of mortality rates can be used to demonstrate the reduction of deaths because of CR packaging. These figures can be noted in Table 3, which cites deaths of children under age 5 involving household products and aspirins. This table indicates that there has been a considerable reduction in child deaths as a result of the ingestion of either household products or aspirins.

Testing Procedures

The first U.S. test procedures protocol for the evaluation of child-resistant packaging were published in the *Federal Register* in 1971. As a result, the packaging field has had decades of experience in generating data utilizing this protocol. Poisoning statistics have demonstrated that the use of CR packaging aids in the reduction of child ingestions and deaths from harmful materials. Nevertheless, as data gathering methodology became more sophisticated, it appeared that there was an area still to be addressed when it came to child-resistant packaging. It was the use of CR packaging by older adults. This point was demonstrated by the fact that the ingestion statistics for prescription drugs showed the highest level of the regulated products. Older adults were the major users of these products and were thought to be contributing to child ingestions. Further studies conducted under contract to CPSC found this to be true (6). In interviews with these older adults, it was found that they misuse CR packaging often due to poor initial opening experiences. They either did not secure the packaging properly, left the caps off completely, or transferred their drugs to easy-to-open unsafe containers. Recognizing that older adults had problems opening CR packaging, the CPSC devised new test procedures to encourage the design and manufacture of easy-to-open so-called "senior-friendly" CR packaging.

Initially, the CPSC let contracts to three universities to design new CR packaging concepts that would satisfy "senior-friendly" criteria, and then a mockup and a unit cavity production package was prepared from the best concept. From this point over a period of time, changes were made to the test protocol to ensure that senior adults could access newly designed packaging of the universities

Table 2. A Comparison of the Number of Regulated Substances by Children Under 5 Years Old

Regulated Substances	Effective Year	Ingestions During the Effective Year	Ingestions During 1982	Decrease Since Effective Year (%)
Aspirin	1972	8146	1753	78
Controlled drugs	1972	1810	541	70
Methyl salicylate	1972	161	49	70
Furniture polishes	1972	697	229	67
Illuminating and kindling preparations	1973	1736	452	74
Turpentine	1973	777	110	86
Lye preparations	1973	508	69	86
Sulfuric acid[a]	1973	7	1	86
Methanol[a]	1973	37	21	44
Prescription drugs (oral)	1974	4180	2251	46
Ethylene glycol	1974	138	59	57
Iron preparations	1977	359	163	55
Paint solvents	1977	641	180	72
Acetaminophen	1980	1511	1118	26

[a] Since these figures are based on a few cases, the percent decrease may not be reliable.

Table 3. Deaths of Children Under Age 5 Involving Household Products[a]

Deaths Due to All Household Chemicals			Deaths Due to Aspirin Products		
Year	No. deaths	Decline (%) Since 1972	Year	No. deaths	Decline (%) Since 1972
1972	216	—	1972	46	—
1973	149	31	1973	26	43
1974	135	38	1974	24	48
1975	114	47	1975	17	63
1976	105	51	1976	25	46
1977	94	56	1977	11	76
1978	81	63	1978	13	72
1979	78	64	1979	8	83
1980	73	66	1980	12	74
1981	55	75	1981	6	87
1982	67	69	1982	5	89
1983	55	75	1983	7	85
1984	64	70	1984	7	85
1985	56	74	1985	0	100
1986	59	73	1986	2	96
1987	31	86	1987	3	93
1988	42	81	1988	3	93
1989	55	75	1989	2	96
1990	49	77	1990	1	98
1991	62	71	1991	2	96
1992	42	81	1992	0	100
1993	50	77	1993	2	96
1994	34	84	1994	1	98
1995	29	87	—	—	—
1996	47	78	—	—	—
1997	22	90	—	—	—
1998	26	88	—	—	—
1999	29	87	—	—	—
2000	28	87	—	—	—

[a] Data obtained from the National Center for Health Statistics in Washington, DC.

design as well as packaging designed by individual inventors and designs developed within the packaging industry. Concepts that were devised included ones that required cognitive skills to activate. That is, they relied on the mental ability of the adults to determine how to open units versus high forces as push and turn or pull as have been required with the ongoing type CR packaging systems. In addition to the new cognitive skill concepts, package manufacturers refined their current CR packaging design to make them easier to open for senior adults yet still difficult for children.

The first U.S. CR packaging test procedure (protocol) appeared in the *Federal Register* in the spring of 1971, and this protocol was adhered to up until the summer of 1995, at which time a new and modified CR protocol appeared in the *Federal Register*. The original 1971 protocol cited the need to employ 200 children between the ages of 42 and 51 months of age equally divided according to age and sex with an allowance of 10% variance, and also 100 adults between the ages of 18 and 45 years representing 70 women and 30 men. The children were to be tested in pairs in familiar surroundings and would have two 5-min test periods, one without a demonstration and one with a demonstration and they were told they could use their teeth if they had not used them in the first 5-min test period. The adults were allowed a 5-min test period and were told that they should open and resecure (if appropriate) the packaging according to the directions.

Standards for the children were set as 85% unsuccessful before demonstration and 80% total after demonstration. Ninety percent of the adults had to open and close (if appropriate) the package in a 5-min test period.

The 1995 CR protocol takes into consideration a number of features that have been observed over the years that would help standardize the testing procedure from one test agency to the next. In addition, it includes major changes in the ages of the adult test group. These features will be discussed later. The ages of the child panelists has remained 42–51 months, but instead of immediately utilizing a group of 200 children, 42–51 months of age, the test is conducted in groups of 50 children on a sequential basis up to 200 if it is required according to an established pass–continue–fail pattern based upon package openings (see Table 4). In order to make it easier to obtain child panelists, the number of chronological groupings has been changed from 10 to 3. The three selected groups are to include

30%	42–44 months of age
40%	45–48 months of age
30%	49–51 months of age

Table 4. Number of Openings: Acceptance (Pass), Continue Testing, and Rejection (Fail) Criteria for the First 5 min and the Full 10 min of the Children's Protocol Test

		Package Openings					
		First 5 min			Full 10 min		
Test Panel	Cumulative Number of Children	Pass	Continue	Fail	Pass	Continue	Fail
1	50	0–3	4–10	11+	0–5	6–14	15+
2	100	4–10	11–18	19+	6–15	16–24	25+
3	150	11–18	19–25	26+	16–25	26–34	35+
4	200	19–30	—	31+	26–40	—	41+

The standard for the child test has remained the same 85% unsuccessful before demonstration and 80% unsuccessful after demonstration.

Included in the U.S. testing procedure for CR packaging from its inception in 1971 is a provision for testing nonreclosable packaging (unit packaging, such as blister packs, strip packs, and pouches). The test procedure follows the same pattern as the reclosable packaging; but instead of just access to a container, an individual package failure with the nonreclosable package for the children is the case whereby the child gains access to greater than eight units of the package (blisters packs or pouches) or the amount of product that would cause harm (for toxicology, based on a 25-lb child), whichever is less.

The truly major changes in the new CR protocol involves the changes in the ages of the 100-member adult panel and the time frame in which they are tested. The new age groups are as follows:

25%	50–54 years of age
25%	55–59 years of age
50%	60–70 years of age

Of these, 70% of the 50- to 59-year-olds are to be female and 70% of the 60- to 70-year-olds are to be female. The standard for the adult test is a 90% successful pattern.

As for the time of the test, in order to become familiar with new CR packaging concepts, they are tested as follows. The adults are tested individually with a 5-min test period to learn how to open and close the test unit. They are then given a 1-min test period to open and close the test unit. A panelist who is unsuccessful in opening the unit in the first 5-min test period is given a non-CR screw cap and a non-CR snap cap to open to attempt to open and close. In this case an opening and closing of the two non-CR units would constitute a failure in the case of the test unit. On the other hand, a panelist who fails to open and resecure the non-CR units is not included in the test unit pattern.

The U.S. Environmental Protection Agency (EPA) follows the lead of the CPSC in the regulation of CR packaging, but the EPA may also rely on, when necessary, an adult panel of 18–45 years of age to evaluate CR packaging.

ENFORCEMENT

CPSC and EPA are the two federal agencies in the United States that are responsible for enforcing the CR packaging regulations: the CPSC for household products and medications and the EPA for pesticides and pool chemicals utilized in and around the home. Both agencies have their own legal staffs, which can act with the Justice Department against companies whose products are not in compliance with packaging regulations. The U.S. federal government relies on product samplings from retail stores and warehouses, complaints from the public, and the number of child ingestions to determine which products should be evaluated for compliance purposes. Producers of products found not to be in compliance are approached by the agency are informed of their problem and advised to improve their packages. If the package is still found not to be in compliance, the federal agency involved can go to the extent of halting further production of the package form and ordering a product recall and imposing fines. This, of course, can result in loss of revenues and undesirable publicity for package and product manufacturers. Voluntary recalls of products by manufacturers have occurred in the past because of packages not satisfying the regulation.

SIMILAR TESTING STANDARDS

ISO8317, entitled "Child-Resistant Packaging—Requirements and Testing Procedures for Reclosable Packages," is most often cited by countries outside of North America. The ISO standard is similar to the U.S. standard in the manner in which the procedures are carried out. The ISO standard includes children 42–51 months that are tested in pairs using two 5-min test periods before and after demonstration as cited in the U.S. regulation. However, the children are not informed that they can use their teeth as they are in the U.S. standard, although the use of teeth is allowed. Testing procedures are conducted on a sequential basis utilizing special sequential statistically devised charts to fill in the test results and determine the pass–fail pattern. Using the ISO test chart, it is possible to complete the child portion of a CR study by employing a total of 30 children to test the CR package. The senior-adult portion of the ISO CR test is similar to that of the U.S. test.

EN14375, entitled "Child-Resistant Non-reclosable Packaging for Pharmaceutical Products," is also similar to the U.S. testing procedures. This standard differs in using the sequential charting method of ISO8317, and it defines an individual package failure differently from the U.S. test. EN14375 defines an individual package failure as access to more than eight units, whereas the U.S. test defines an individual package failure as the point at which a hazardous amount would be accessed or, in the case of a low hazard, greater than eight units.

CAN/CSA Z76.1 and Z76.2 are the two Canadian standards for Reclosable and Non-Reclosable Child-Resistant Packages, respectively. These standards are similar to the above standards, but include more details of the test procedures as well as the option to utilize the ISO/EN style sequential test scheme. In addition, it also suggests the use of certain ASTM International mechanical CR packaging test standards to evaluate test units. Certification of pharmacy vials in Canada is required through the Canadian Standards Association.

CLASSIFICATION

The ASTM International D10.31 subcommittee has established what can be considered the official classification system for child-resistant packaging.. This ASTM standard, *D3475 Classification of Child-Resistant Packages*, is based on the style of function of the CR packaging. In 2007 there were 13 major types of packages included in this classification system, each with a number of subgroups totaling 99 functional subtypes in all. Examples of the different types of packages, along with their producers, are presented in the standard. Since 2004 this standard has been updated annually (7).

In 2005 the U.S. Consumer Product Safety Commission and the U.S. Environmental Protection Agency each have added a child-resistant packages guide to their web sites (8, 9).

BIBLIOGRAPHY

1. *Code of Federal Regulations, Title 16, part 1700*, CPSC Regulation, U.S. Consumer Product Safety Commission, Washington, DC.
2. *Fed. Reg.* **60**(140), 37710 (July 21, 1995).
3. *Fed. Reg.* (July 20, 1971).
4. *Fed. Reg.* **46**(41), 15106 (March 3, 1981).
5. *Code of Federal Regulations, Title 40, Part 162*, EPA Regulation, U.S. Environmental Protection Agency, Washington, DC.
6. *Fed. Reg.* **47**(179), 40659 (September 15, 1982).
7. ASTM International standards information available at: www.ASTM.org
8. U.S. CPSC web information available at: http://www.cpsc.gov/businfo/pppaguid/crpindex.html
9. U.S. EPA web information available at: http://www.epa.gov/opprd001/crp/indexastmtype.htm

CLOSURES, BOTTLE AND JAR

J. F. Nairn
T. M. Norpell
Phoenix Closures, Inc.,
Naperville, Illinois

The cork stopper and the continuous-thread cap represent two epochs in closure evolution. The cork stopper began its slow ascendency 25 centuries ago, attaining its broadest use by the middle of the 19th century. With the arrival of the standardized continuous-thread cap and the introduction of plastic closures, both in the 1920s, the modern closure era was underway.

Cork provided an incomparable friction-hold seal. A material of high cellular density, cork is compressible, elastic, highly impervious to air and water penetration, and low in thermal conductivity—a natural panacea for the elementary problems of closure. Historical antecedents of the cork stopper are found within the Roman Empire. The art of glass-blowing matured commercially there, resulting in a vast commerce of vases, jars, bottles, and vials. Bottles and jars were more common during the Roman Empire than at any period before the 19th century (1). The use of cork floats and buoys by the Romans, with subsequent applications as bungs (large stoppers) for casks, suggests the likelihood of fabricated cork bottle-stoppers. Yet with the fall of the Roman Empire, glass-blowing and the use of the cork stopper declined until after the Renaissance. Other sealing methods used at the same time as the rise of the cork stopper in the 16th century include a Near Eastern method of covering the container with interlaced strands of grass, or strips of linen, and applying a secondary seal of pitch. Western Europeans used glass stopples and various lids of glass and clay before the common use of cork. Wax was a very common closure, inserted into the neck and covered with leather or parchment. Raw cotton or wool, sometimes dipped in wax or rosin, was also employed, frequently covered with parchment or sized cloth, which was then bound to the neck (2).

The aftermath of the Industrial Revolution was characterized by a heightened quest for technical sophistication. Steam and, later, electric power provided quicker realization of more complex goods. The ethic of the economy of scale, "the more you produce, the less costly it is to produce it," became the momentum for the sudden explosion in manufacturing technology. During this time the world was colonized on vast scales, and population doubled in 150 years. These forces of urbanization and industrialization created an unprecedented demand for bottled goods by the 19th century. Closure evolution of this period reflects the search for a practicable seal through a variety of mechanical devices. By mid-19th century, cork was the predominant closure, providing a friction seal for foods, beverages, and patent medicines.

Many attempts were made then to attune the concept of threaded closure to the demands of a new industry. A major contributor was John Mason. His 1858 patent of the

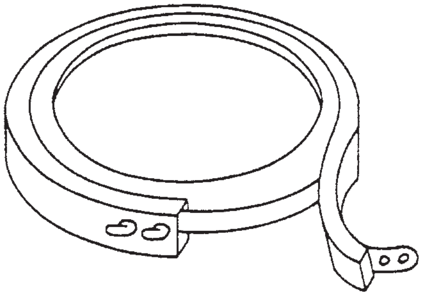

Figure 1. The Phoenix band closure. (Courtesy of S. Kiefer and B. Zemlo, Phoenix Closures, Inc.)

Mason Jar redesigned glass threads to accomplish a tighter and more dependable seal. Developing closure and container industries were to remain a chaos of varying pitches, lengths, and thicknesses throughout the century as manufacturers tried to perfect some particular feature that would require their exclusive manufacture. Intermediate to the development of the standardized continuous thread cap was the Phoenix band cap (see Figure 1), a popular closure among food packagers because it could provide a hermetic seal in a world of imperfect finishes. Invented in France by Achille Weissenthanner in 1892, the closure provided adjustability to finishes by means of a slit-and-tongue neckband, an improvement over the original neckband closure patent of 1879 by Charles Maré of France (3). This cap also introduced the custom that later became standard in the industry: measuring closures in millimeters (mm).

By the end of the century, some form of external mechanical fastener, such as Henry W. Putnam's bailed clamping device known as the "Lightning Fastener," was the leading closure for beer and ale. Internal stoppers provided the seal for most carbonated soft drinks, most notably Hiram Codd's glass-ball stopper and Charles Hutchinson's spring stopper (4).

In the early 1900s, Michael J. Owens successfully automated the production of jars and bottles, which in turn created latent market demand for inexpensive, easy to use, standardized closures. The crown cap, devised by William Painter around 1890, provided a solution for the beverage industry. Shortly after World War, glass and cap manufacturers, through the Glass Container Association, designed and standardized the shallow, continuous-thread cap. Subsequent forces shaping today's closure were the emphasis on package styling created in the 1930s and the development of thermoplastic-molding technologies. During the 1970s, plastic closures showed a 60% market increase (5). In the 1980s the forces of consumer demand for convenience, society's need for access control, and industry's need for cost-efficient innovation continue to redefine the closure.

CLOSURE FUNCTIONS

A closure is an access-and-seal device that attaches to glass, plastic, and metal containers. These include tubes, vials, bottles, cans, jars, tumblers, jugs, pails, and drums. About 80 billion (10^9) closures are produced annually in the United States (6). The closure works in conjunction with the container to fulfill three primary functions: (a) to provide protective containment through a positive seal, (b) to provide access and resealability according to varying requirements of convenience and control, and (c) to provide a vehicle for visual, audible, and tactile communications.

Protective Containment

Protective containment and seal are achieved when closure and container are integrated to form a unified protection system for the product during its cycle of use. Protective containment has a twofold meaning: (a) containing the product so that neither the contents nor its essential ingredients escape and (b) providing a barrier against the intrusion of gases, moisture vapor, and other contaminants.

A Positive Seal

A packaged product is vulnerable to many forms of natural deterioration, including migration of water or water vapor, contamination by oxygen or carbon dioxide, and assaults by microbiological life. The packaged product is further challenged by extremes of heat and cold, as well as dryness and humidity, and by physical stresses imposed upon it during the distribution cycle (7).

A positive seal is attained when the contact points of the closure and the top of the container (its "land" surface) are pressed together to form a seal. Frequently a resilient lining material, compressed between the closure and the container, provides a tighter, more secure seal. A liner may be made of paper, plastic, or metal foil and is often a composite of many materials (8). A seal may also be formed by caps containing flow-in compounds where a gasket is devised by pouring a liquid sealing compound into the closure. A variety of linerless thermoplastic closures utilize molded-in sealing devices. These embossed or debossed features press against the land surface and provide a seal when the closure is applied and tightened. Sealing specifications may range from mere containment to the preservation of highly sensitive food, pharmaceutical, household, and industrial products. Three common types of seal applications are sterilized, vacuum, and pressurized.

Two closure methods provide containment and seal: (a) friction-fitting closures, including snap-ons, stoppers, crowns, and press-ons, and (b) thread-engagement closures, including continuous-thread and lug caps. A positive seal depends upon such factors as the type of product, closure, container, and seal desired, the resiliency of the liner, the flatness of the sealing surface, and the tightness or torque with which the closure is applied (9).

Access

Contemporary closure design is shaped by the demands of a pluralistic marketplace where strong consumer preferences for convenient access exist alongside legal mandates for access control. Many packages today are ergonomically designed systems capable of easy opening and dispensing, and also affording critical access control. Closure technology has always sought to provide “a tight seal with easy access,” but today’s simultaneous demands for easy access and access control are the most polarized in the industry’s history. Access to a product can be said to exist on a continuum of convenience. This may range from the knurls (vertical ribbing) on the side of a continuous-thread cap, designed to provide assistance in cap removal, to what can be called convenience closures, which have a variety of spouts, flip-tops, pumps, and sprayers to facilitate easy removal or dispensing of the product.

Control

Concurrent to greater demand for convenient, often one-handed, access to a product, legal mandates and consumer preferences press for more access controls. These access controls are of two major types: tamper-evident (see Tamper-evident packaging) and child-resistant (see Child-resistant packaging). Regulated tamper-evident (TE) closures may be breakable caps of metal, plastic, or metal/plastic composites. In one variety the closure itself is removable but a TE band remains with the neck of the bottle. In another, the TE band is torn off and discarded. Another system not specifically addressed in the regulations incorporates a vacuum-detection button on the closure. Other TE systems include paper, metal foil, or plastic innerseals affixed to the mouth of the container. The FDA has stated 11 options for making a package tamper-evident, two of which apply to closures (10). Child-resistant closures (CRCs) are designed to inhibit access by children under the age of five. This is frequently accomplished through access mechanics involving a combination of coordinated steps which are beyond a child’s level of conceptual or motor skills development. Of these closures, 95% are made of plastic; the remaining 5% combine metal with plastic (11).

Verbal and Visual Communications

The closure is a focal point of the container. As such, it provides a highly visible position for communications, an integral aspect of today’s packaging. Three communication forms include styling aesthetics, typography, and graphic symbols. Since the closure is handled and seen by the consumer every time the product is used, the audible, visual, and tactile message (often subconscious) becomes very important to the packager.

Styling Aesthetics. Aesthetics are an important consideration because package design has the same basic goal as advertising: to promote brand awareness leading to brand preference. The closure and the container provide a visual symbol of the product, creating imagery through aspects of styling. Three important aspects are form, surface texture, and color. The form of a closure can be utilitarian to suggest value, or it can assume elaborate and elegant forms to suggest luxury. The surfaces of glass, metal, and plastic can provide a variety of surface textures unique to the materials used. Metal caps and decorative overshells of steel, aluminum, copper, or brass can be burnished, painted, screened, or embossed. Plastics can be molded in vivid colors, anodized to assume metallic sheens, or printed, hot-stamped, screened, or embossed. Glass can provide the kind of design statement exclusive to the glass arts, creating imagery of luxury or elegance. Many closures today are styled simply, with brand-identification or functional embossments (e.g., stacking rings) appearing on the closure top.

Color is the most pervasive form of closure decoration. A closure may be purely functional in form; yet, with color, it can take on dramatic significance. With the advent of color-matching systems in industry, such as the Pantone Matching System (Pantone, Inc.), the closure, container, label, and point-of-purchase display can be coordinated to produce a strong emotional reaction. The emotion may be one of action and excitement, as the hot primary colors used in soap and detergent packaging, or cool and subdued colors that characterize many cosmetics and fragrances. In addition to its decorative aspects, color can provide functional assistance. Color contrast directs the eye to areas of emphasis, and this direction can be important in teaching the mechanics of container access and use. In a crowded environment of dispensing options found at point of purchase, color can help identify a closure as one that the consumer already knows how to use. A great many dispensing closures today, for example, differentiate the spout from its surrounding fitment by strong color contrast. Closure color can also be used to identify the flavors of a food product or beverage and help to differentiate these flavors quickly within a product line.

Typography. Common forms of written communications found on a closure may include brand identification, a listing of ingredients, nutritional information, access instructions, or consumer advisories. These can be printed, screened, hot stamped, or molded onto a closure. For purposes of impact at point of purchase, a brand name frequently appears on the closure top.

Graphic Symbols. A graphic symbol frequently found on the closure is a company or product logo. Another common graphic is the arrow, a symbol that has gained importance with the advent of safety, convenience, and control mechanisms of modern closures. Arrows direct the consumer to proper disengagement of the closure, indicate engagement points where access is possible, or signify the direction of dispension (e.g., in the control tips of spray-type mechanisms). The scannable bar code is a more recent functional graphic to appear on closures (see Code, Bar) (12).

METHODS OF CLOSURE

Removable closures attach to containers by two principal methods: thread engagement and friction engagement. Threaded closures include continuous-thread caps, lug caps, and metal roll-on caps. Friction-fit closures include crowns, snap-fit, and press-on types. Thread engagement is the most widely used method of attaching a closure to a container (13).

Thread-Engagement Types

Three closure types provide a seal through thread engagement: continuous thread (CT), lug, and roll-on caps. CT designs attain a seal through the attachment of a continuously threaded closure to a compatibly threaded container neck. The lug cap uses an abbreviated thread design, with access and reclosure accomplished in one-quarter turn. The roll-on is supplied as a blank unthreaded metal shell which then becomes a closure on the capping line when it is compressed to conform to the finish of a bottle. The press–twist closure also has its threads formed after it is applied to the container.

The CT Closure. Threaded closures were standardized in the 1920s and continue to prosper due to the basic soundness of their principle, which offers a mechanically simple means of generating enough force for effective sealing, access, and resealing (14). Today the CT design is manufactured in plastic, tin-free steel, tin plate, and aluminum. Some CT control-closures combine metal and plastic by using a regular CT metal cap and a plastic overshell. The CT closure provides a seal for the container by engagement of its threads with the corresponding threads of the container (see Figure 2). As the thread structure (or "finish") is designed on an inclined plane, the engagement and application torque cause the threads to act like the jaws of vise, forcing closure and container into contact to form a positive seal. Critical sealing applications typically include a liner placed between the closure and the container. When tightened, the material is compressed between the sealing surfaces to form a seal. The thermoplastic "linerless closure" employs a variety of molded devices which can also provide a positive seal. All CT closures are designated by diameter (as measured in nanometers) followed by the finish series number. A closure with the designation number "22-400" refers to a closure with an inside diameter of 22 mm designed in the 400 finish of a shallow continuous thread.

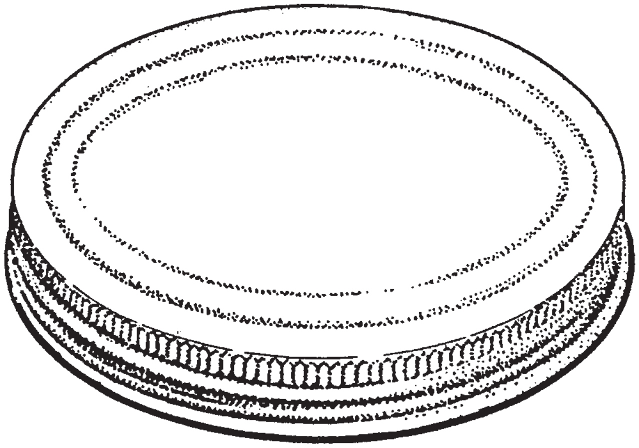

Figure 2. A metal CT closure. (Courtesy of S. Kiefer and B. Zemlo, Phoenix Closures, Inc.)

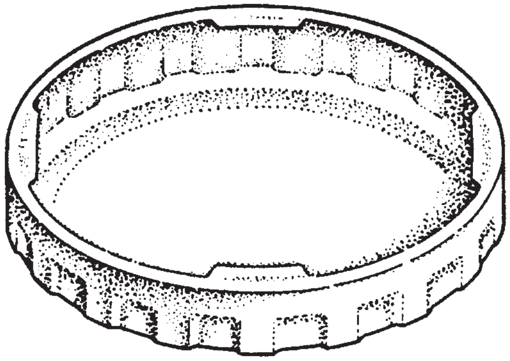

Figure 3. Lug closure. (Courtesy of S. Kiefer and B. Zemlo, Phoenix Closures, Inc.)

Lug Cap. The lug cap operates on the principle of thread engagement as does the CT cap. The thread structure of the lug is not continuous, but consists of a series of threads which may be inclined or horizontal depending upon finish variations. The lugs of the cap are positioned under corresponding threads on the container finish (see Figure 3). When tightened, the engagement of two, four, or six lugs pulls the closure and lining material onto the container. The lug cap is the most popular steel vacuum-closure today (15). Frequently a flow-in plastisol inner gasket is used as the liner. The lug cap is used extensively for vacuum packs in the food industry, and it is suitable for use on many products packaged in glass containers. The lug cap's design allows application and removal with a one-quarter turn. This means not only consumer convenience, but also quick capping. The common finish designations for lug caps are 120, 140, and 160 referring to 2, 4, and 6 lug finishes respectively (16).

Roll-On. The aluminum roll-on cap was an innovative method of closure that won immediate acceptance within the packaging industry in the 1920s (17). Although frequently categorized separately from threaded closures, the roll-on nonetheless utilizes thread engagement to accomplish seal and reseal. What makes this closure unique is the capping process. A lined, unthreaded shell (or "blank") is furnished to the packer. During capping, the blank is placed on the neck of a container and the capping head exerts downward pressure, which creates a positive seal as the liner is pressed against the container finish. Next, rollers in the capping head shape the malleable aluminum shell to conform to the contour of the container thread (see Figure 4).

The roll-on closure is used in the food, carbonated beverage, and pharmaceutical markets where pressure sealing is required. It is considered one of the most versatile sealing devices for normal-, high-, and low-pressure seals. A widely used version today is the tamper-evident roll-on. A tear band perforated along the bottom of the closure skirt is tucked under a locking ring during capping by a special roller. When opened by the consumer, the band separates from the closure to provide visible evidence of tampering. The roll-on cap can be applied at high speeds, approaching

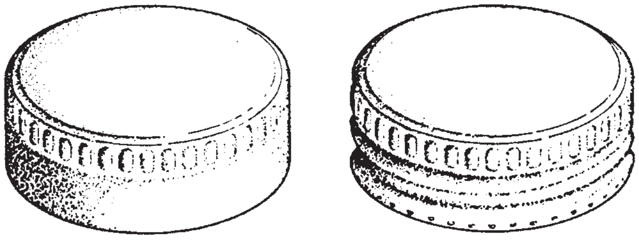

Figure 4. Roll-on closure. (Courtesy of S. Kiefer and B. Zemlo, Phoenix Closures, Inc.)

1200 bottles per minute. In the standard bottle finishes, the 1600 series designates roll-on.

Press-Twist. The "press-twist" is another closure which attains its threads on the capping line (see Figure 5). Primarily used for baby foods, it also provides closure for sauces, gravies, and juices. Applied in a steam atmosphere, the plastisol side gasket in the heated cap forms thread impressions when pressed against the glass finish. As it cools, permanent impressions are formed in the compound so the cap can be twisted to open and reseal similar to a CT cap.

Friction-Fit Closures

Many bottles are sealed with simple metal or plastic closures that are pressed onto the top and held in place by friction. The four basic types of friction-fit closures are crowns, snap-fit caps, press-on caps, and stoppers.

Crowns. The crown beverage cap was a major innovation in friction-fitting closure. It has been widely used since the turn of the century for carbonated beverages and beer. Crowns are made of tin-free steel and tin plate. Matte-finish tin plate is used for soft drinks and a brighter finish is used for beer. The crown has a short skirt with 21 flutes that are crimped into locking position on the bottle head. The flutes are angled at 15° in order to maintain an efficient seal (see Figure 6) (18).

The crown contains a compressible lining material, which over the years has included solid cork, composition cork or plastic liners, and foil and vinyl spots. Though simple in concept, the crown provides a friction-fit sufficient to seal pressurized beverages. The flared cap skirt in conjunction with the smoothness of the bottle neck provides easy access through the prying motion of the bottle opener. As convenient access came to be demanded in the marketplace, easy-open crowns were developed. The twist-off beverage crown first appeared on beer bottles in 1966 and gained in popularity (19). Designed for convenient access, it could be twisted off by hand or removed with a bottle opener. Bottlers switched to this cap because no special capping equipment was required for the new closure. In 1982 many companies moved away from this cap because of potential tampering. The crown is currently capable of application speeds exceeding 1000 units a minute.

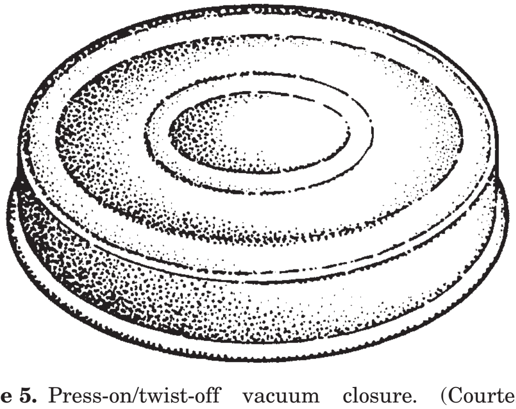

Figure 5. Press-on/twist-off vacuum closure. (Courtesy of S. Kiefer and B. Zemlo, Phoenix Closures, Inc.)

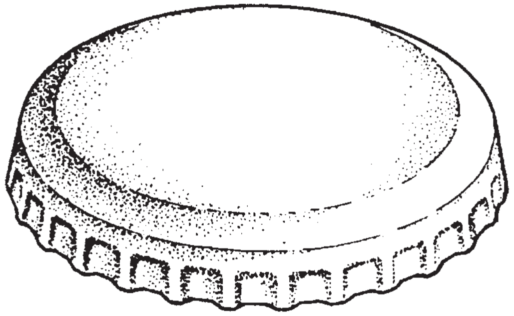

Figure 6. Crown closure. (Courtesy of S. Kiefer and B. Zemlo, Phoenix Closures, Inc.)

Snap-Fit Caps. The snap-fit caps are simple lids that can be pressed onto the tops of bottles. They may be held in place by the friction of a tight fit or by supplementary flanges, ridges, or grooves that grasp the bottle finish (20). The skirts of some metal snap-fit caps are rolled under to form a spring action as the cap is pushed against the lip of the bottle. Some types of snap-fit caps have ridges on the inside of the caps that match the grooves in the ridges on the bottle. The simplest form is designed to fit so snugly that the friction between the surfaces of the cap and bottle is sufficient to hold the cap in place. Snap-fit caps may be made of metal or plastic. They are used for such food products as jellies and for over-the-counter medicines such as headache remedies. An important variation is the press-on TE closure, frequently used on milk and juice products. When these caps slide over a ridge near the bottom edge, they fit so tightly that they cannot be pulled off. The bottle is opened by pulling a tear tab located above the ridge. This separates the top of the cap from the bottom portion that was locking it in place.

Press-on Vacuum Caps. Sealing for the press-on vacuum closure is obtained from atmospheric pressure when air is withdrawn from the headspace of the container by steam or mechanical sealing methods. Sometimes further security for this type of seal is provided when the edge of the cap is forced under a projection of the glass finish or held under a similar projection by snap lugs. In many vacuum caps, it is the pressure of a gasket against the top of the container finish which provides a seal. In others, atmospheric pressure alone is adequate. A recent press-on variation is the composite cap, a gasketed metal disk and plastic collar used in sealing dry-roasted nuts and seafood products. Its plastic collar is used as a TE device.

TYPES OF CLOSURE

It is impossible to place all closures into clean-cut categories where there is no overlap of functions. Yet despite these limitations, a classification can provide focus for understanding contemporary closure trends. As defined by their utility, the four classes of contemporary closures are: containment, convenience, control, and special purpose.

Containment Closure

Though all closures provide containment, a containment closure is defined here as a one-piece cap whose primary function is to provide containment and access on vast production scales. CT caps (for general-purpose sealing), crowns and roll-ons (for sealing of pressurized beverages), and lug and press-on caps (for vacuum sealing of foods) are within this class of containment closure.

Convenience Closure

Closure development in recent years has been in response to consumer preferences for convenient access to the product. Convenience closures provide ready access to liquids, powders, flakes, and granules for products that are poured, squeezed, sprinkled, sprayed, or pumped from their containers. There are five types of convenience closures: spout, plug-orifice, applicator, dispensing-fitment, and spray and pump types.

Fixed-Spout Closures. A spout is a tubular projection used to dispense liquid and solid materials. It may be fixed or movable and may be capable of dispensing a product in a wide ribbon or a fine bead, depending on size and configuration of the orifice. Fixed-spout caps incorporate a cylindrical or conical projection into the center of a threaded or friction-fitting closure. Spouts on reusable containers are often sealed by a small sealer tip on the end of the spout. On some sealed spouts, dispensing control can be attained by cutting the spout at various heights, thereby providing different orifice sizes. A more contemporary form of fixed-spout closure is molded with a smaller sealed spout on the top of the cap. Called "snip-tops," they are one of the most inexpensive forms of dispensing closure (see Figure 7). Contemporary "dripless pour spouts" have recently been introducted to provide "No-Mess" dispensing of viscous, sticky products packaged in large containers, such as liquid detergents and fabric softeners. Large pour spouts are protected by screw-on overcaps that double as measuring caps. Upon reclosure, the measuring overcap is designed to drain residual product directly into the container through the spout.

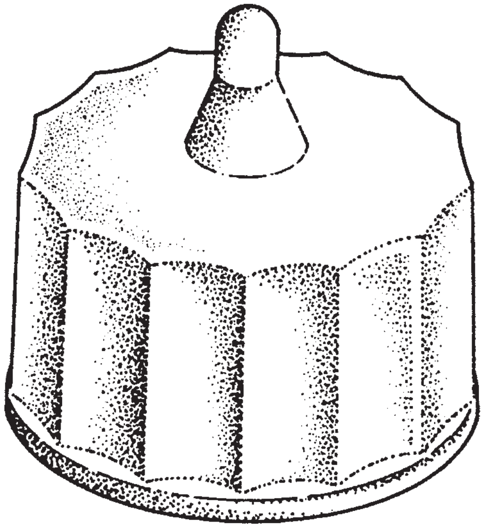

Figure 7. Snip-top closure. (Courtesy of S. Kiefer and B. Zemlo, Phoenix Closures, Inc.)

Movable-Spout Closures. Also referred to as turret, swivel, or toggle types, the movable-spout concept features a hinged spout that can be flipped into operating position and reclosed with the thumb alone to provide one-handed access and reseal (see Figure 8). Most movable spouts are two-piece constructions, though a one-piece swivel spout design requiring one manufacturing operation has recently been introduced. Newer refinements of this type include the incorporation of a tear band across the spout to provide tamper evidence. Valves-pout closures, such as the "push–pull" closure, are opened and closed in a straight-line, vertical fashion (see Figure 9). "Twist spouts" employ a tapered flange design and open and close by a twisting motion.

Plug-Orifice Closures. These closures first aided in the dispensing of personal-care and cosmetic products, and

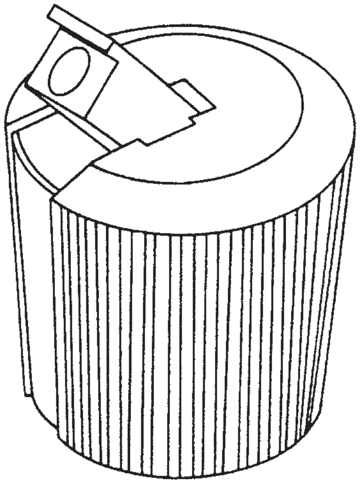

Figure 8. Flip-spout closure. (Courtesy of S. Kiefer and B. Zemlo, Phoenix Closures, Inc.)

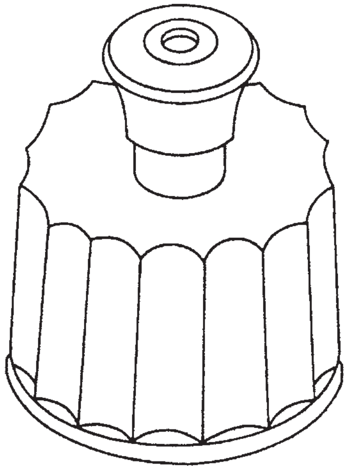

Figure 9. Push–pull closure. (Courtesy of S. Kiefer and B. Zemlo, Phoenix Closures, Inc.)

they are now used in conjunction with multilayer high-barrier plastic bottles for convenient dispensing of food products (see Multilayer plastic bottles). To some, the hinged-top designs represent the wave of the future in food packaging (21). The closure consists of (a) a dispensing orifice incorporated into a screw-on base closure and (b) a plug, or "spud," hinged within the top of the closure or molded into a flip-up hinged cap (see Figure 10). In the polypropylene plastic versions, the plug and orifice provide a friction-fitting seal that produces an audible "snap" when engaged, an instance where a closure can communicate its sealed state by sound. The top of a "snap-top hinged closure" swings open on two or three external hinges. The "disk closure" is another plug-orifice type, a two-piece design consisting of an orifice closure base and a plug fitment hinged to a round disk which is set into the closure top. By pressing upon the access point, the disk fitment swings up upon its hinges, deactivating the plug seal from the orifice for one-handed dispension. Some of these designs also produce audible "snap" upon engagement and disengagement.

Applicators. There are many different kinds of convenience applicators, many specialized for particular product applications. Four major types are brushes, daubers, rods, and droppers. Brush caps range from small cosmetic brushes to large applicators used for applying adhesives. Sponge, cotton, felt, or wool pads affixed to applicator rods are used to apply a wide variety of household and cosmetic products and are known as dauber caps. Glass and plastic rods are used in the drug and cosmetic industries, such as the balled-end rod used to apply medicines. Glass and plastic droppers, with straight, bent, and calibrated points, are frequently used to provide precise dosages for medicinal products. The three components of the dropper are an elastomeric bulb, the cap, and the pipette.

Fitment Closures. Fitments and fitment closures are designed to regulate the flow of liquids, powders, flakes, and granules. Fitments are inserted into the neck of the container or are permanently attached. Fitment closures incorporate regulating devices into screw-on or press-on caps. Those which plug inside the neck finish include dropper and flow-regulating fitments. "Dropper tips," used with squeeze-type bottles, dispense liquid in increments of one drop and are usually covered with a protective overcap. "Pour-out fitments" control the splashing of liquids by retarding their flow, a frequent problem when precise, small-volume pouring is required from cumbersome containers. Those fitments or closures that regulate solid materials include sifter and shaker designs. Most contain a number of sifter holes in which powdered material can be dispensed evenly. Others incorporate options that permit the material to be shaken-out, poured-out, or spooned. "Shaker caps" and "powder sifter caps" dispense powdered or granular products, sometimes incorporating revolving fitments that provide containment. A wide variety of sliding panels or hinged covers provide the consumer with sprinkling, pouring, or spooning options. Many variant designs combine spouts, sifters, dial disks, and sliding covers.

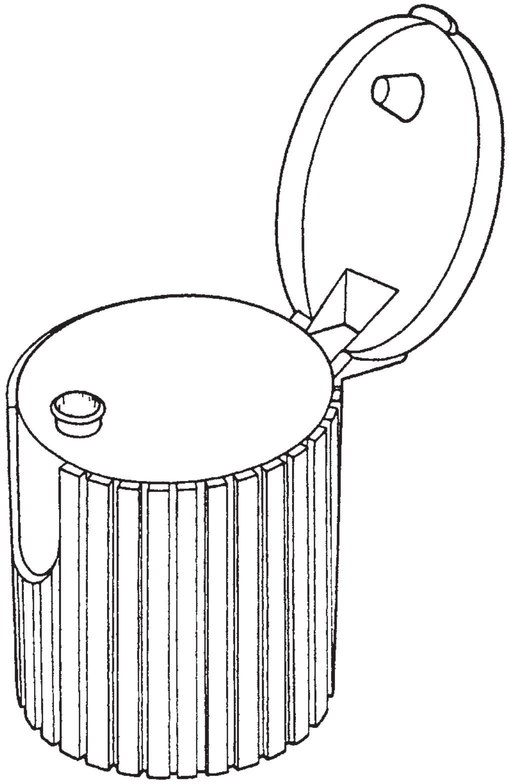

Figure 10. Hinged plug-orifice closure. (Courtesy of S. Kiefer and B. Zemlo, Phoenix Closures, Inc.)

Spray and Pump Dispensers. "Regular sprayers" operate on a basic pump principle and function with a piston, accumulator, or cylinder. Dispensing a heavier particle size, these sprayers are often used for household and personal-care products. Generally, the smaller the orifice size, the finer the spray pattern. "Fine mist sprayers" dispense in finer particle size as required by some personal-care products. "Trigger sprayers" are larger and more complex in design, offering convenient dispensing for large volumes of liquids. The bulb-and-piston-drive trigger-sprayer units emit spray patterns ranging from a fine mist to a stream. The amount of product delivered by piston-driven "pump dispensers" depends upon its viscosity: The more viscous, the more strokes to prime and the lower the output per stroke (22). Regular dispensing pumps dispense in volumes from less than 0.5 cm^3 to slightly more than 1 cm^3 per stroke in water. Large-volume dispensers range in capacity from 1/8 oz (3.7 mm) to 1 oz (29.6 mm) per stroke.

Control Closure

The first "clerkless" food store appears to have been opened in 1916 by Clarence Saunders. By 1930 there were 3000 of them, soon to be known as "supermarkets" (23). These stores raised new problems of hygiene as more and more products were available in unit packs that had to be capable of withstanding repeated handling, attempts at sampling, and occasional malicious intrusion. The need for consumer product safety grew along with this new concept in food retailing, a need that would become a matter of increasing concern for the U.S. Congress as the number and variety of products increased. Among the legal mandates developed to protect the public against harmful substances are those which specify access controls for containers.

Tamper-Evident Closures. Tamper-evident caps have been in use for years, though earlier they were referred to as "pilferproof caps." Today these metal and plastic caps provide visible evidence of seal disruption and are used for over-the-counter (OTC) drugs, beverages, and food products. The two kinds of TE closures are (a) "breakaway" or "tear band" closures used for pressurized and general sealing applications and (b) TE vacuum designs for vacuum-sealing applications. The closure user can also fulfill tamper-evident requirements through the use of innerseals that cover the container mouth (see Tamper-evident packaging).

Breakaway Caps. In 1982 the FDA established requirements for tamper-evident packaging for over-the-counter (OTC) drug products. The agency defined such packaging as "having an indicator or barrier to entry which, if breached or missing, can reasonably be expected to provide visible evidence to consumers that tampering has occurred" (24). The FDA did not issue rigid standards of compliance but instead listed 11 suggested and approved methods from which a packer may choose. Regulation 6 describes paper or foil bottle seals covering the container mouth under the cap as a means to provide tamper-evidence. Regulation 8 describes breakable caps as another option. The FDA defined these caps as being plastic or metal that either breaks away completely when removed from the container or leaves part of the cap on the container. The breakaway cap is the most common form of tamper-evident closure. With other options, such as shrink bands and strip stamps, a packager needs additional operations and equipment to achieve tamper evidence. Two forms of tamper-evident caps are mechanical breakaway and tear bands.

Mechanical Breakaway. These are threaded caps with perforations along the lower part of the skirt which form a "break line" in the closure (see Figure 11). When the closure is twisted for removal, the band, which is locked to the finish by crimping or rachets, separates from the closure along the break line. The cap is removed and the lower part of the skirt remains on the container neck. The breakaway cap can be efficiently applied, is highly visible, familiar to consumers, and is durable enough to maintain its integrity throughout distribution. Metal closures of this type frequently crimp the band to the container neck for a friction hold. Variations in this type of TE closure include different band designs and methods of off-torque resistance—for example, ratchets on the band that lock to mated protrusions on the finish. TE bands on some plastic closures are shrunk by heat to form a tight fit around the container neck.

Tear Bands. These types, frequently called tear tabs, employ a locked band to prevent cap removal (see Figure 12). Access is accomplished by completely removing the band from the container. Frequently, a protruding tab is evident for the consumer to grasp and commence tearing. Many nonthreaded TE closures utilize this type, such as the press-on friction fit closures found on milk containers. The closure is removed by tearing off the lower skirt, which overrides a bead on the container finish. Most of the removable-band types are made of plastic, usually polyethylene.

TE Vacuum Caps. Marketing leverage, rather than legal mandate, accounts for the expansion of TE into food packaging (25). These measures are not referred to as "tamper-evident" in label or closure communications, but are placed in a more positive light, such as "Freshness

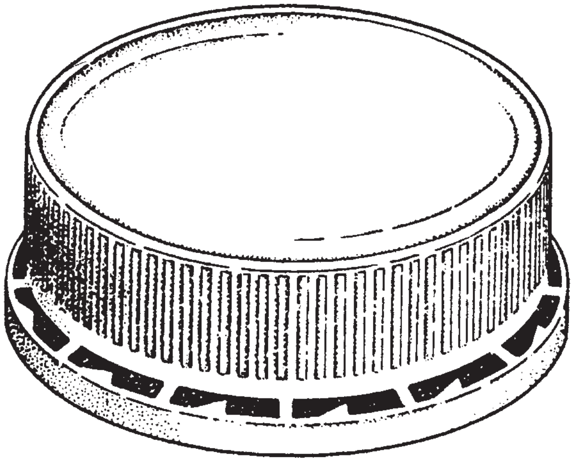

Figure 11. Mechanical breakaway closure. (Courtesy of S. Kiefer and B. Zemlo, Phoenix Closures, Inc.)

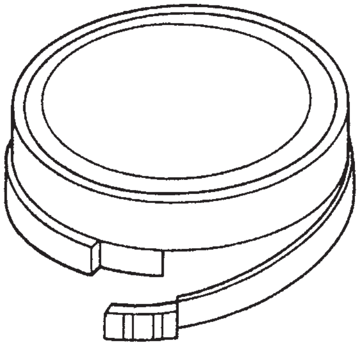

Figure 12. Tear band. (Courtesy of S. Kiefer and B. Zemlo, Phoenix Closures, Inc.)

Sealed" or "Safety Sealed." The two major types of TE vacuum closures are vacuum button and vacuum tear-band caps.

A popular TE option for food products packaged in glass containers under vacuum is the "button-top closure." These include (a) lug versions used for jellies, sauces, and juices and (b) the threaded-seal version popular with the baby-food industry. A safety button, or coin-sized embossment on the top of the cap, pops-up as the jar is opened and its vacuum is lost. Accompanying this is the "pop" that serves as audible evidence of an undisrupted seal. When capped, the embossed button is held down by vacuum pressure, providing the consumer with visual evidence that the container has not been opened. Another type, the "vacuum tear-band closure," is a two-component closure used for the packaging of nuts and condiments. It consists of a metal vacuum lid inserted into a plastic tear-band closure skirt. Protrusions molded into the plastic collar provide friction-fitting resealability for the container.

Child-Resistant Closures. Alarmed by the increasing number of children being harmed through accidental poisoning, Congress acted in 1970 to pass the Poison Prevention Packaging Act. This act, Public Law 91-601, established mandatory child-resistant closures for rigid, semirigid, and flexible containers of such compounds as the Consumer Product Safety Commission (CPSC) deemed dangerous to children (see Child-resistant packaging). Studies revealed that the accidental-poisonings curve in children peaked at 18–24 months, but the manual dexterity curve increased with age, peaking in 4- to 5-year-olds children. Therefore, protocol testing requires testing of children aged 42–51 months. Four major premises were considered in the development of child-resistant closures (26): children 42–51 months of age could not perform two deliberate and different motions at the same time; children of that age could not read, nor could they determine alignments, but they can learn quickly by watching; children are not as strong as adults, but through ingenious use of teeth, table edges, or other tools around them, their persistence would give them leverage to make up for their strength; and although their hands and fingers are smaller than those of adults, children's teeth and fingernails are thin and sharp and can slide under and into gaps. Childhood deaths involving all household chemicals have declined 75% since the first regulation under the act was passed. Packages designed to protect children, however, have come under fire for restricting access by the handicapped and the elderly. Most OTC drug packagers agree that CR devices are generally more burdensome than TE devices. Efforts are underway to develop new CR closures.

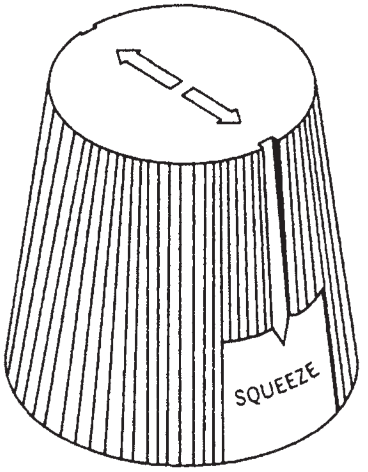

Figure 13. Child-resistant "squeeze-and-turn" closure. (Courtesy of S. Kiefer and B. Zemlo, Phoenix Closures, Inc.)

Child-resistant measures are defined by the CPSC as packaging that is designed to be significantly difficult for children under 5 years of age to open within a reasonable time, yet not difficult for adults without overt physical handicaps to use properly. Under current regulations, a package fails to be child-resistant if more than 20% of a test panel of 200 children are able to gain access, or if more than 10% of a test panel of 100 adults are unable to open and properly resecure the test package (27). The three most frequently used child-resistant closure types are press-turn, squeeze-turn, and combination-lock. The "press-turn" cap is removed by applying downward force while simultaneously turning the cap. "Squeeze-and-turn" caps employ a free-rotating soft-plastic overcap which engages an inner threaded cap or disengages a locking mechanism when sidewall pressure is applied (see Figure 13).

The "combination-lock" caps use interrelated components formed into the cap which must be oriented before the cap can be removed. A common low-cost variety of this closure is the one-piece "line-up, snap-off cap" (see Figure 14). A slight interruption of the thread on the container serves as an engagement point for these caps. A protrusion on the cap fits under the single thread. When the cap is turned, it becomes "locked" onto the container. As with TE closures, many packagers add CR closures to packages not required to have them, even though the cost may generally add 1–5% to the cost of the package.

Special-Purpose Closure

Special-purpose closures are those which are of specialized application or premium design. These include

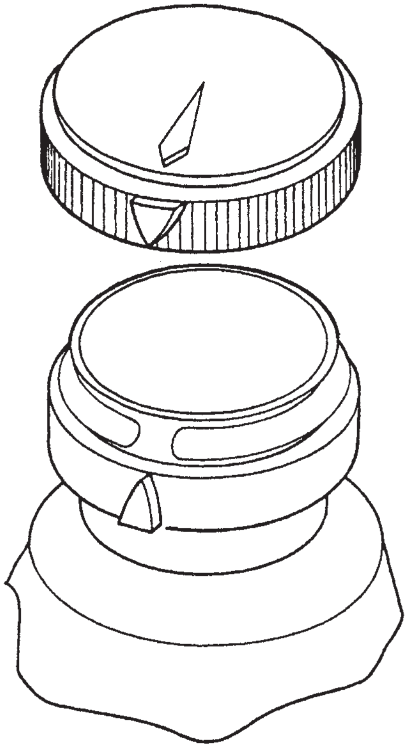

Figure 14. Child-resistant “snap-off closure”. (Courtesy of S. Kiefer and B. Zemlo, Phoenix Closures, Inc.)

aesthetic closures, special-function closures, stoppers, and overcaps.

Aesthetic Closure. The aesthetic closure is an important sales-promotion aspect of the package. It is designed to communicate clearly and powerfully by imagery. Original private-mold glass stoppers used in fragrance bottles, some with lavish sculptural representations, are an example of this type. These are frequently the most expensive forms of closure.

Special-Function Closures. These closures serve a specialized function in the marketplace. There are, for example, closures that vent containers which sustain a pressure buildup. Such pressures can cause the container to rupture, or violently expel the product when the cap is removed. Since venting closures can leak when the container is not in an upright position, they must be used in controlled circumstances. Many manufacturers require a “hold-harmless” agreement as a condition of sale for such closures. Another special-function closure is the twist-off closure for injectables, a two-piece aluminum cap used on parenteral vials.

Stoppers. The wine and champagne industry is the largest user of stoppers. Cork stoppers are standardized by size and grades, the latter according to the degrees of product vintage (28). Stoppers of natural rubber, synthetic silicone rubbers, and thermoplastic materials provide closure in some chemical and biological applications. Rubber plug closures are crimped onto ampules with metal bands and allow for the insertion of a hypodermic needle in medical uses.

Overcaps. The overcap is a secondary cap designed to protect the primary closure, dispenser, or fitment of a container. Metal or plastic overcap designs attach to the container by friction-fit or thread engagement, and they are used to protect aerosol and dispensing fitments. Overcaps frequently double as measuring caps for mouthwash, liquid detergents, and fabric softeners.

SEALING SYSTEMS

Though often the smallest aspect of a package, the seal is responsible for keeping the entire concept intact. If the seal is not maintained by the closure, liner, and container working together, the success of the product is at stake.

Liners

Today’s lining material is either a single substance (usually paperboard or thermoplastic) or a composite material. Synthetic thermoplastic liners include foamed and solid plastics of varying densities. A composite lining material consists of a backing and a facing. The backing, usually made of cellulose or thermoplastic, is designed to provide the proper compressibility to affect the seal and proper resiliency for resealing. Facing materials, representing the side of a composite liner that comes into direct contact with the product, are numerous, as are the variables of product chemistry with which they must contend. Generally, facing materials are thermoplastic-resin-coated papers, laminated papers of foil or film, or multilayer types devised for special applications (see Closure liners).

Innerseals

The innerseal affords TE protection by sealing the mouth of the container. Three common types are inserted by the closure manufacturer into the cap (29). A waxed-pulp backing and glassine innerseal is common within the food industry. After the filling operation the container runs under a roller system which applies an adhesive to the lip of the container, and then the cap is applied. Upon removal, the glassine adheres to the container while the pulp backing remains in the closure. Pressure-sensitive innerseals, generally a foamed polystyrene, adhere to the lip upon application and require several hours to set. Heat-induction innerseals are plastic-coated aluminum foils, often adhered to a waxed pulp base liner. After the cap is applied, the container passes under an electromagnetic field which causes the aluminum to generate heat. The plastic facing on the aluminum subsequently melts and adheres to the container.

Linerless Closures

Plastic linerless closures provide a positive seal in certain circumstances, foregoing the need for intermediary materials and secondary liner-insertion operations. To many packagers, the cost savings provided by the linerless closure can be considerable. The seal of a linerless closure is achieved by molded embossments forming diaphragms, plugs, beads, valve seats, deflecting seal membranes, or rings which press upon, grasp, or buttress the sealing surfaces of the container. Over a dozen types of linerless closures are in common use, each designed to provide a seal at one or more critical sealing surfaces of the container, which include the land surface, the inside edge of the land surface, or the outside edge of the land surface. Some form of land seal in conjunction with a valve or flange represents one type of effective linerless closure design. The land is typically the most consistent sealing surface. A land-seal ring can bite into plastic container finishes or deflect on glass finishes. An inner buttress can correct ovality problems in plastic containers by forcing such off-round finishes back into proper shape.

CLOSURE MATERIALS

Closures are made of plastics, metal, or glass.

Plastic Closures

Molded plastic closures are divided into two groups: thermoplastics (e.g., polyethylene, and polypropylene, and polystyrene) and thermosets (e.g., phenolic resins and urea components) (see Polymer properties). Thermoplastic materials can be softened or recycled by heat; thermoset materials cannot be recycled once they are molded.

Thermoplastics. In general, thermoplastic closures offer the packager light weight, versatility of design, good chemical resistance to a wide range of products, and economical resins and manufacturing processes. Their relative flexibility is essential to contemporary closure design with its emphasis on convenience and control devices. Thermoplastics provide good application and removal torque. They maintain a good seal and tend to resist back-off. Unlike thermosets, thermoplastics can be pigmented in the full-color spectrum in strong, faderesistant intensities.

Most thermoplastic closures are produced by injection molding (see Injection molding), although some are made by thermoforming (see Thermoforming). Polypropylene and polyethylene account for about 90% of all thermoplastic closures.

Polypropylene. Polypropylene (see Polypropylene) has unusual resistance to stress-cracking, an essential characteristic of hinged closures. In thin hinged sections, it has the quite remarkable property of strengthening with use. The homopolymer has limited impact resistance, but it can be modified for better performance. It has excellent resistance to acids, alkalies, oils and greases, and most solvents at normal temperatures. It has the best heat resistance of the polyolefins, with a high melting point suitable for sterilized products, but it becomes embrittled at low temperatures. Polypropylene has better printability than polyethylene, but both are inferior to polystyrene or thermosetting plastics in that respect. As a relatively rigid molded material, it has outstanding emboss and deboss potential for closure communications.

Low-Density Polyethylene. LDPE (see Polyethylene, low density) is resilient and flexible. It is relatively tasteless and odorless, although some organoleptic problems are more prevalent with LDPE than with polypropylene. It provides outstanding moisture protection, but it is not a good gas barrier. LDPE's economy as a closure material is provided by low-cost resins and relatively short injection-molding cycle times. Though it is considered to have good resistance to stress cracking, problems may occur in the presence of certain chemicals such as detergents. Communications embossments or debossments are good but limited by the softness of the material.

High-Density Polyethylene. Compared to LDPE, HDPE is stiffer, harder, and more impermeable (see Polyethylene, high-density). It is tasteless, odorless, and impact-resistant, but it will stress-crack in the presence of some products such as detergents unless it is specially formulated. Its heat resistance and barrier properties are superior to LDPE. HDPE resin is more expensive than LDPE, but it is still considered a relatively low-cost material. A particular drawback to HDPE closures is a potential for warpage and loss of torque.

Polystyrene. Polystyrene (see Polystyrene) is used for about 10% of the closures produced today. Polystyrene homopolymer is attacked by many chemicals, is very brittle, has relatively low heat resistance, and does not provide a good barrier against moisture or gases. Many of the disadvantages of polystyrene are overcome by rubber modification and/or copolymerization.

Thermosets. Phenolic and urea compounds have a wide range of chemical compatibility and temperature tolerances. Some thermosets can sustain subzero temperature without embrittlement and can survive at temperatures higher than 300°F (149°C) (30). The density and rigidity of thermosetting plastics give the material its heavy weight and guard against slippage over threads, a problem with softer thermoplastics such as LDPE. Thermosets cannot provide the color range or intensity of thermoplastics, but they accept vacuum metalizing decoration in silver and gold with superior adhesion qualities. During the molding process, thermosets undergo a permanent chemical change and cannot be reprocessed as thermoplastics can. Thermoset closures are manufactured by compression molding (see Compression molding). Cycle time for thermosets is generally longer than thermoplastics, (30–120 s), depending upon thickness of the product and additives.

Phenolics. Phenol–formaldehyde closures are hard and dense. They are the stiffest of all plastics, but are relatively brittle and low in impact strength. The properties of phenolics depend to a large extent upon the filler material used. Wood flour improves impact resistance and reduces shrinkage. Cotton and rag fiber additives increase the impact strength; asbestos and clay additives improve chemical resistance. Phenolics are resistant to some dilute acids and alkalies and attacked by others, especially oxidizing acids. Strong alkalies will decompose phenolics, but they have excellent solvent resistance. Their heat resistance is outstanding. Phenolics cost less than ureas and are easier to fabricate, but they are limited in color to black and brown unless decorated.

Urea. Urea–formaldehyde is one of the oldest plastic packaging materials, first used in the early 1900s. The resin produces extremely hard, rigid closures with excellent dimensional stability. It has the highest mar resistance of plastics discussed, but is the most brittle. Urea compounds are odorless and tasteless, with good chemical resistance. They are not affected by organic solvents but are affected by alkalies and strong acids. They show good resistance to all types of oils and greases. They will withstand high temperatures without softening. Urea compounds are available in white and a wide range of colors, but with muted intensities compared to thermoplastics. Urea compounds, like phenolic resins, do not build up static electricity, which leaves them free of dust. They are the most expensive of the plastic closure materials.

Metal

Metal caps, the strongest of closures, are used today for general, vacuum, and pressurized applications. Tin-plate and tin-free steel (see Tin mill products) are used in the production of continuous thread, and vacuum press-on closures, lugs, overcaps, and crown caps. The largest market for steel closures is vacuum packaging. Aluminum closures are primarily continuous thread caps and roll-on designs.

Steel Closures. Steel closures are of two materials: tin-plate and tin-free steel. Tin-plate closures are plated steel with a thin coating of tin on both sides that helps protect the base steel from rust and corrosion. There are limitations to tin's protective abilities, however, because tin plate is susceptible to rust when exposed to high humidity. Additional coating operations offer increased protection. Tin plate is graded according to temper. Temper T-1 is soft, and T-6 is quite hard. Closures can be fabricated in any temper, but are predominantly T-2 to T-5. The more common base weights used include single-reduced 80- and 90-lb (36.3- and 40.8-kg) with a cost-reducing trend toward double-reduced 55- and 65-lb (25- and 29.5-kg) plate (15).

Tin-free steel shows promise of becoming the dominant steel closure material. Crown closures are now made primarily of tin-free steel produced as single-reduced stock in a 90-lb (40.8-kg) plate weight for conventional crowns and a lighter, 80-lb (36.3-kg) plate for twist-off crowns.

Aluminum Closures. Light weight, malleability, and resistance to atmospheric corrosion characterize aluminum closures. Some products more corrosive to aluminum than tin plate require special coatings for optimum protection (31). The composition of aluminum alloys varies according to intended use with up to 5% magnesium and lesser elements such as manganese, iron, silicon, zinc, chromium, copper, and titanium (32).

Metal-Overshell Closures. Steel, aluminum, copper, or brass shells slip over plastic closures to form composite "overshell" caps. Freed from finish contours, the smooth, often-tall sidewalls of polished and burnished metals provide aesthetically pleasing characteristics much in demand by the cosmetic and fragrance industries. There is a greater willingness to pay a premium for appearance in these industries because the closure assumes a greater role in sales promotion.

Glass

Glass stoppers are used in commercial glassware and in cosmetic and fragrance packaging. Frequently, a polyethylene base cap assists in friction-fitting the stopper into the bottle. Stoppers for the premium fragrance industries represent superlative designs in molded glass.

CLOSURE SELECTION

Selection

Who selects and specifies the closure depends upon the size, nature, and organization of a company. It may be a president or general manager, a brand manager, package engineer, purchasing agent, or a packaging committee. General guidelines for closure selection are provided below by "The 5 Cs of Closure" (33).

Containment

The essential requirements of containment are product compatibility and the ability to provide functional protection. This objective is reached by evaluated choices in closure method, type, material, and sealing system. Determining the sealing system, for example, may involve decisions as to whether lining materials or a linerless closure will resist permeation of the product to standards. Other important variables arise in the interaction of closure and container and how they affect the efficacy of engagement and seal. Torque considerations include seal pressure (the amount of pressure exerted on sealing surfaces) and strip torque (the torque at which a closure slips over the container threads). As torque is affected by different coefficients of friction between the liner surface and the container, as well as by materials used in closure manufacture, each closure system should be individually evaluated to ensure it meets applicable performance criteria.

Convenience

Opportunities for convenient dispensing may begin with a containment closure that provides a reduced number of turns, or broader "knurls" on the wall of the closure skirt to provide surer opening and closing. Convenience

Table 1. Common Finishes and Descriptions

Finish Designation	Description
120	Two-lug Amerseal quarter-turn finish
140	Four-lug Amerseal quarter-turn finish
160	Six-lug Amerseal quarter-turn finish
326	Pour-out snap cap CT combination
327	Snap cap CT combination
400	Shallow CT finish
401	Wide sealing surface on 400 finish
405	Depressed threads of 400 finish at mold seam
410	Medium CT concealed-bead finish
415	Tall CT concealed-bead finish
425	8- to 15-mm shallow CT
430	Pour-out CT
445	Deep S CT finish
450	Deep CT Mason finish
460	Home-canning jar finishes
600	Beverage crown finish
870	Vacuum side seal pry-off
1240	Vacuum lug-style finish
1337	Roll-on pilferproof finish
1600	Roll-on finish
1620	Roll-on pilferproof finish
1751	Twist-off vacuum seal

closures provide many options including simple spouts, plug-orifice snap caps, and, at the mechanically complex end of the continuum, variable-dispersion sprayers and pumps. The method of closure engagement, the requirements of containment, the type of sealing system required, and the premium placed upon convenience will determine options in dispensing closures.

Control

A variety of substances are mandated by law to be packaged as tamper-evident or child-resistant. Cost and sealing needs will determine options in control closures, as well as whether secondary sealing systems are required. More consumer complaints result from inadequate opening and closing of product containers than any other package function. Careful review and testing of control-closure and lining system can prevent potential access problems with elderly or handicapped consumers.

Communications

The shelf appearance of a closure is perceived as a reflection of product quality. The closure communicates this by style and brand signature. In addition it often gives

Table 2. CT Closure Finishes and Pitch

Finish	Description	Sizes (mm)	Threads per inch (Pitch per centimeter)
400	Shallow continuous thread	18, 20, 22, 24	8 (3.2)
		28, 30, 33, 35, 38, 40	6 (2.4)
		43, 45, 48, 51, 53, 58	6
		60, 63, 66, 70, 75, 77	6
		83, 89, 100, 110, 120	5 (2.0)
410	Medium continuous thread	18, 20, 22, 24	8
		28	6
415	Tall continuous thread	13, 15	12 (4.7)
		18, 20, 22, 24	8
		28	6
425	Shallow continuous thread	8, 10	14 (5.5)
		13, 15	12
430	Pour-out continuous thread	18, 20, 22, 24	8
		28, 30, 33, 38	6
445	Deep “S” continuous thread	45, 56, 58, 63, 73, 75	6
		77, 83	5
450	Deep CT Mason finish	70, 86, 96, 132	4 (1.6)
455	CT for 455 glass finish	28, 33, 38	8
460	Home canning jars	70, 86	4
470	CT for GPI 470 glass finish	70, 86	4
480	CT for GPI 480 glass finish	24, 28, 33, 38	6
485	Deep “S” fitment cap	28, 33, 35, 38, 40	6
		43, 48, 53, 63	
490	Deep “S” larger “H” fitment cap	18, 20, 22, 24, 28, 30	8
		33, 35, 38, 43, 48, 63	
495	CT for GPI 495 glass finish	28, 33, 38	8
SP 100	CT for plastic SP-100 finish	22, 24, 26, 28, 38	8
SP 103	CT for plastic SP-103 finish	26	8
SP 200	CT for plastic SP 200 finish	24, 28	6
SP 444	CT for plastic SP 444 finish	24, 28, 33, 38, 43, 45, 48	6
		53, 56, 58, 63, 73, 75	6
		70	4
		83	5

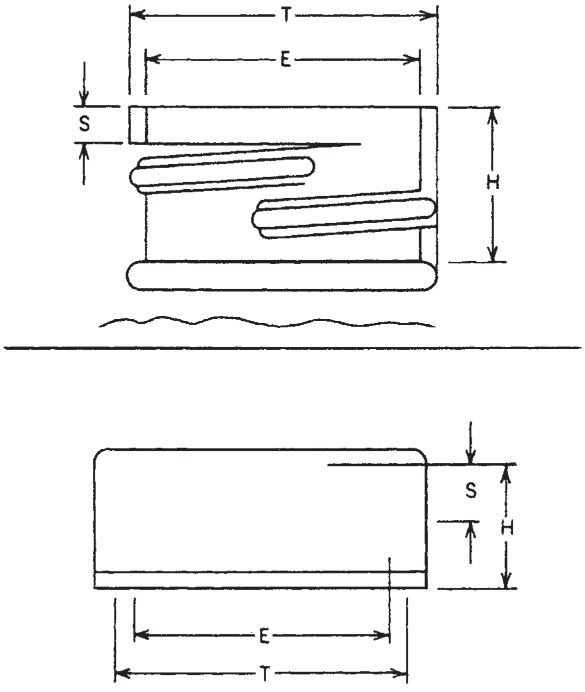

Figure 15. T, E, H, and S dimensions.

a detailed list of ingredients, and sometimes instructs on disengagement. The larger the closure the more it may augment the label in communicating ingredients or nutritional information. Today's closure not only communicates visually, but audibly as well. Steel vacuum button closures "pop" to confirm the freshness of a product, and polypropylene plug-orifice types "snap" when the seal is engaged. Determining the kinds of communications required, and selecting the graphic options which maximize readibility and impact, specify the final appearance, or point-of-purchase impact, of the closure.

Cost

Some cost considerations depend on production requirements. Thermoplastic-mold costs, for example, are generally more expensive than those for thermosets, but faster cycles and resin economy may prove more economical in larger volumes. A cost savings can be realized through the use of linerless closures if they can maintain seal integrity. Lightweighting the closure by selection of an appropriate material has helped to reduce transportation costs for packagers. Another cost consideration is whether a "stock" or a "privately tooled" closure is required. A privately tooled closure is far more expensive to produce, but, again, the packaging concept or production volumes may "economize" it. There is a trend toward specifying stock closures with market-tested designs. Many manufacturers and distributors offer extensive stock-closure lines to the packer.

CLOSURE SPECIFICATION

A closure is designated by a series of numbers and/or letters. An example is the designation 48–400. The first number refers to the inside diameter of the closure as measured in millimeters. Common closure diameters range from 22 to 120 mm.The second set of numbers, the 400, is the finish designation.

The "finish" of a closure is its thread design, and the size, pitch, profile, length, and thickness of the engagement threads on plastic and metal closures and containers. Today there are over 100 glass-finish designations for a great variety of glass containers (see Table 1). Series designations for the most popular CT closures are 400 and 425 for shallow continuous thread designs, 410 for medium CTs, and 415 for tall CTs. For all glass finishes, tolerances have been established by the Glass Packaging Institute, whose closure committee became the Closure Manufacturers Association (CMA) in 1980. Voluntary standards for closures have been issues by CMA which include closures for both glass and plastic container finishes (see Table 2) (34).

Closures developed for glass containers were used for plastic containers when the latter were introduced, but it was soon realized that the contour of a glass bottle thread is not an optimum profile for the plastic bottle. It does not provide accurate closure centering on the finish, nor does it permit higher capping torques required to provide a positive seal on plastic containers (35). The Dimensional Subcommittee of the Society of the Plastics Industry developed specific finish dimensions, tolerance, and thred contours for blown plastic bottles. The two basic contours are the M-style and the L-style. Where a typical glass thread is rounded in contour, the M-style thread engaging surfaces are angled at 10° and the L-style is angled at 30°. Both contours increase sealing abilities for closures on plastic bottles.

Four critical closure dimensions are represented by the four letters T, E, H, and S (see Figure 15). T is the dimension of the root of the thread inside the closure. E is the inside dimension of the thread in the closure. H is the measurement from the inside top of the closure to the bottom of the closure skirt. S is the vertical dimension from the inside top of the closure to the starting point of the thread. These critical closure dimensions and tolerances for metal and plastic closures designed for glass and plastic containers are represented in the voluntary standards for closures as issued by CMA.

CLOSURE TRENDS

Closure concepts seem to have changed more in the last 40 years than in the last 4000 years. Yet changes in state-of-the-art concepts, materials, and manufacturing processes do not represent the real driving forces behind today's closure developments. The industry is consumer-driven. More and more, a premium is readily paid for convenience. The industry has also been awakened, sometimes with great shock and alarm, to the powers of human foible, which demands a redefinition of access control.

Functional Trends

Today's consumer has been characterized as oriented toward health, diet, appearance, longevity, and convenience

(36). Households with two working spouses, increased single households, and retiree households all command a market for convenience packaging (37). The dispensing closure is no longer a functional appendage, but is seen as an integral part of the total package (38). Today's convenience closure is time- and labor-saving. It prevents spills, leaks, and drips. It provides measured-dose dispensing and can visually signal tampering (39). As plastic containers continue to penetrate the food market, the closure will broaden squeeze-dispensing. Other functional trends include the expansion of TE food packaging, larger closure sizes, increased use of stock caps to avoid private-mold costs, and new concepts in linerless closure design. Since innovative packaging can increase market share, special emphasis is being placed on improved tamper-evidence, child-resistance, and convenience designs. These functions will no doubt become more and more integrated into one cap. Closures are now being marketed which provide for both TE and CR.

Conclusion

The ductility of plastics accounts for the fast progress of plastic closures, which will undoubtedly take a still-larger share of the market in years ahead (40,41). Polypropylene represents the largest volume and highest growth plastic material with 200 million (10^6) lb (90,700 tons) used in the production of plastic closures in 1984, an increase of 33% within 4 years (42). Polystyrene has shown slight growth in recent years, with 72 million lb (32,700 tons) used in closure production in 1984. Closures accounted for 66 million lb (29,900 tons) of HDPE consumption, an amount that has remained relatively stable over recent years. LDPE (37×10^6 lb or 16,800 tons) and PVC (35×10^6 lb or 15,900 tons) have both remained stable in recent years. As for thermosets, 15×10^6 lb (6800 tons) of phenolic resins and 11×10^6 lb (5000 tons) of urea compounds were used in closure production in 1984 reflecting little growth in recent years.

Metal thread-engagement closures continue to assume a position in the food and pharmaceutical industires due to new fabricating, plating, and light-weighting technologies which will keep steel and aluminum closures competitive.

BIBLIOGRAPHY

J. F. Nairn and T. M. Norpell, "Closures, Bottle and Jar" in M. Bekker, ed., The *Wiley Encyclopedia of Packaging Technology*, 1st edition, Phoenix Closures, Inc., Naperville, IL, 1986, pp. 172–185.

Cited Publications

1. H. McKearin and K. M. Wilson, *American Bottles and Flasks and their Ancestry*, Crown Publishers, New York, 1978, p. 17.
2. *Ibid.*, pp. 210–212.
3. H. Higdon, ed., *The Phoenix Flame* (a house magazine of the Phoenix Cap Company, Chicago, now Phoenix Closures, Naperville, Il.) **XV**(32) (Feb. 1940).
4. A. Lief, *A Close-Up of Closures*, Glass Container Manufacturers Institute, New York, 1965, p. 16.
5. Closure Manufacturers Association, "Closures for Bottles, Cans, Jars" *Packag. Encycl.* **29**, 153 (1984).
6. "Closures for Containers," *Current Industrial Reports, M34 H (85)-1*, U.S. Department of Commerce, Washington, D.C., April, 1985, p. 1.
7. R. J. Kelsey, *Packaging in Today's Society*, St. Regis Paper Co., Ridgewood, NJ, 1978, pp. 20–38.
8. T. Tang, "Closures, Liners and Seals," *Packag. Encycl.*, **29**, 158–160 (1984).
9. J. F. Hanlon, *Handbook of Package Engineering*, McGraw-Hill, New York, 1971, Section 9, pp. 5–6.
10. "Tamper-Evident Packaging Requirements," *Fed. Reg.* **47**(215), 50442 (1982).
11. J. B. Carroll, *Memorandum from the Closure Manufacturers Association,* McLean, VA, April 19, 1985, p. 1.
12. B. Knill, *Food Drug Packag.* **48**, 5 (1984).
13. "Quantity and Value of Metal and Plastic Closures," *Current Industrial Reports, M34H(83)-13* U.S. Department of Commerce, Washington, D.C., October 1984, p. 1.
14. Ref. 5, p. 152.
15. *Steel Cans*, Report by the Committee of Tin Mill Products Producers, American Iron and Steel Institute, Washington, D.C., 1984, p. 8.
16. Ref. 9, Section 6, p. 20.
17. Ref. 4, p. 29.
18. P. Zwirn, "The Crown is Still King," *Can. Packag.* **37**(6), 24 (1984).
19. "The Best Ideas in Packaging," *Food Drug Packag.* **39**, (1984).
20. C. G. Davis, *Packag. Technol.* **27**, 27 (1982).
21. R. Heuer, *Packaging*, **29**, 34 (April, 1984).
22. R. L. Harris, "Closures, Dispensing Systems," *Packag. Encycl.* **29**, 157 (1984).
23. T. T. Williams, *A History of Technology*, Clarendon Press, Oxford, 1978, p. 1411.
24. "Tamper-Resistant Packaging Requirements," *Fed. Reg.* **47**(215), 50444 (1982).
25. H. Forcinio, *Food Drug Packag.* **29**, 35 (1984).
26. *Child Resistant Packaging*, American Society for Testing and Materials, Philadelphia, pp. 20–21.
27. "CPSC Replies to Queries on CR Rules Compliance," *Food Drug Packag.* **40**, 20 (1985).
28. Ref. 9, Section 9, p. 21.
29. *Options for Successful Medical/Pharmaceutical Packaging, Bulletin PB-484*, Phoenix Closures, Inc., Naperville, IL., April 1984, p. 2.
30. L. Roth, *An Introduction to the Art of Packaging*, Prentice-Hall, Englewood Cliffs, NJ, 1981, p. 153.
31. Ref. 9, Section 7, p. 16.
32. Ref. 9, Section 7, p. 31.
33. "The 5 C's of Closure," *Marketing Communications Bulletin*, Phoenix Closures, Inc., Naperville, IL., December 1, 1984.
34. *CMA Voluntary Standards*, Closure Manufacturers Assoc., McLean, VA, 1984.
35. J. Szajna, *Food Drug Packag.* **29**, 12 (1984).
36. A. J. F. O'Reilly, *Food Drug Packag.* **29**, 72 (1984).
37. H. K. Foster, *Food Drug Packag.* **29**, 46 (1984).
38. Ref. 21, p. 36.

39. B. Miyares, *Food Drug Packag.* **29**, 72 (1984).
40. R. Graham, *Food Drug Packag.* **29**, 42 (1984).
41. H. Peter Aleff, "Comparison of Thermoplastic with Thermoset Closures," *Packag. Technol.* **12**(2), 18 (1982).
42. "Materials 1985," *Mod. Plast.*, **63**(1), 69 (1985).

General References

H. L. Allison, "High Barrier Packaging: What are the Options?," *Packag.* **30**, 25 (1985).

J. Agranoff, ed., *Modern Plastics Encyclopedia*, Vol. **60**, McGraw-Hill, New York, 1984. *Note*: The Engineering Data Bank section contains extensive data on properties of plastics, along with design data, chemicals and additives information, and data on molding machinery.

L. Barail, *Packaging Engineering*, Reinhold Publishing Corporation, New York, 1954.

The Closure Industry Report, Closure Manufacturers Association, McLean, VA, fall 1983 and summer 1984.

E. F. Dorsch, "Closures and Systems," *Packag. Encycl.* **30**, 126–128 (1985).

R. C. Griffin, Jr., and S. Sacharow, *Principles of Packaging Development*, The Avi Publishing Co., Westport, CT., 1972.

K. Hannigan, "Baby Food Closure Grows Up," Chilton's *Food Engineering*, Chilton Company, Radnor, PA, 1984.

G. Jones, *Packaging: A Guide to Information Sources*, Gale Research Company, Detroit, MI, 1967.

Kline's Guide To The Packaging Industry, Charles H. Kline & Co., Inc., Fairfield, NJ, 1979.

E. A. Leonard, *Packaging Economics*, Books for Industry, New York, 1980.

"Mack-Wayne Introduces New One-Piece Dispensing Closure and New Breakaway Closure," *Packag. Technol.* **14**(1), 34 (1984).

"Packaging: Big Changes Ahead," *Prepared Foods* **153**, 60–70 (1984).

"Plastics Hit the Market with Tamper Evident Closures," Chilton's *Food Eng.* **56**, 60 (1984).

N. C. Robson, "The State of the Anti-Tampering Art," *Packag. Technol.* **13**, 26 (1983).

S. Sacharow, *A Guide to Packaging Machinery*, Books for Industry, New York, 1980.

S. Sacharow, *A Packaging Primer*, Books for Industry, New York, 1978.

B. Simms, ed., "Closures, Dispensers and Applicators," *Packag. Encycl.* **29** (1984).

CLOSURES, BREAD BAG

G. E. Good
Kwik Lok Corporation

INTRODUCTION

Packaging bread in polyethylene bags is an almost universal method of bread packaging. Customer preference for easy opening and reclosing the package influenced the development of bag closures at the very start of bread bagging. Closing by tape, which had been used in connection with early bagging methods, was quickly discarded when the bulk of the bakery production lines changed to the new polyethylene bagging and closing equipment. Tape was neither convenient for the consumer nor fast and dependable for the bakers. Two types of closures and automatic equipment systems have emerged as the standards of the baking industry. Developed simultaneously, these are the wire tie and the plastic-clip closure.

WIRE TIES

The predominant automatic wire-tie equipment now being used by the United States baking industry is from the Burford Corporation, Maysville, Oklahoma. Different models are required to attach to the different types of installed bread and bun baggers. This type of automatic bag-closing equipment is limited to about 60 packages per minute. The wire ties used in automatic application are 4 in. (10.2 cm) long. The wire comes on reels of 6000 ft (1829 m), 18,000 closures per reel, and is cut to length as it is applied to the package. Colors are available for color-coding purposes (see Figure 1).

The wire tie has a left- or right-hand twist, depending on the production equipment. Wire ties are available with all-plastic, laminated plastic/paper, along with all-paper covers over the wire core. The quality of the wire tie must be carefully maintained; otherwise, separations of the laminations occur, leaving the bare wire exposed. Source of the wire ties is Bedford Industries, Worthington, Minn.

PLASTIC-CLIP CLOSURE

Plastic-clip closures are produced from medium-impact polystyrene (see Polystyrene). The material has a resiliency that allows it to return to its original shape after many reuses by the consumer (see Figure 2). They are

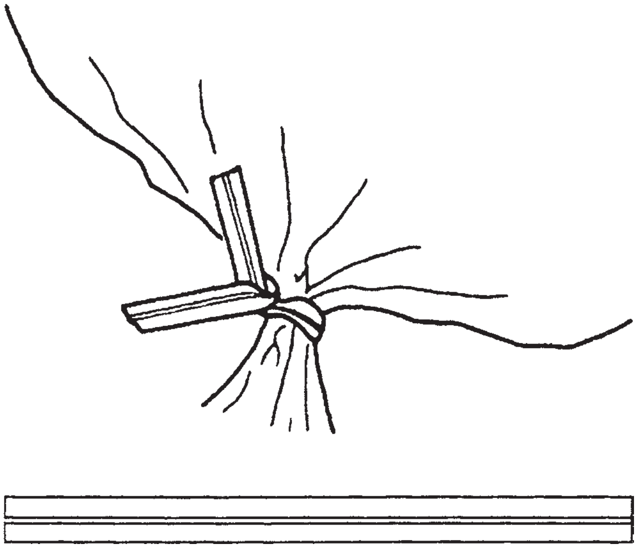

Figure 1. A wire tie for a bread bag.

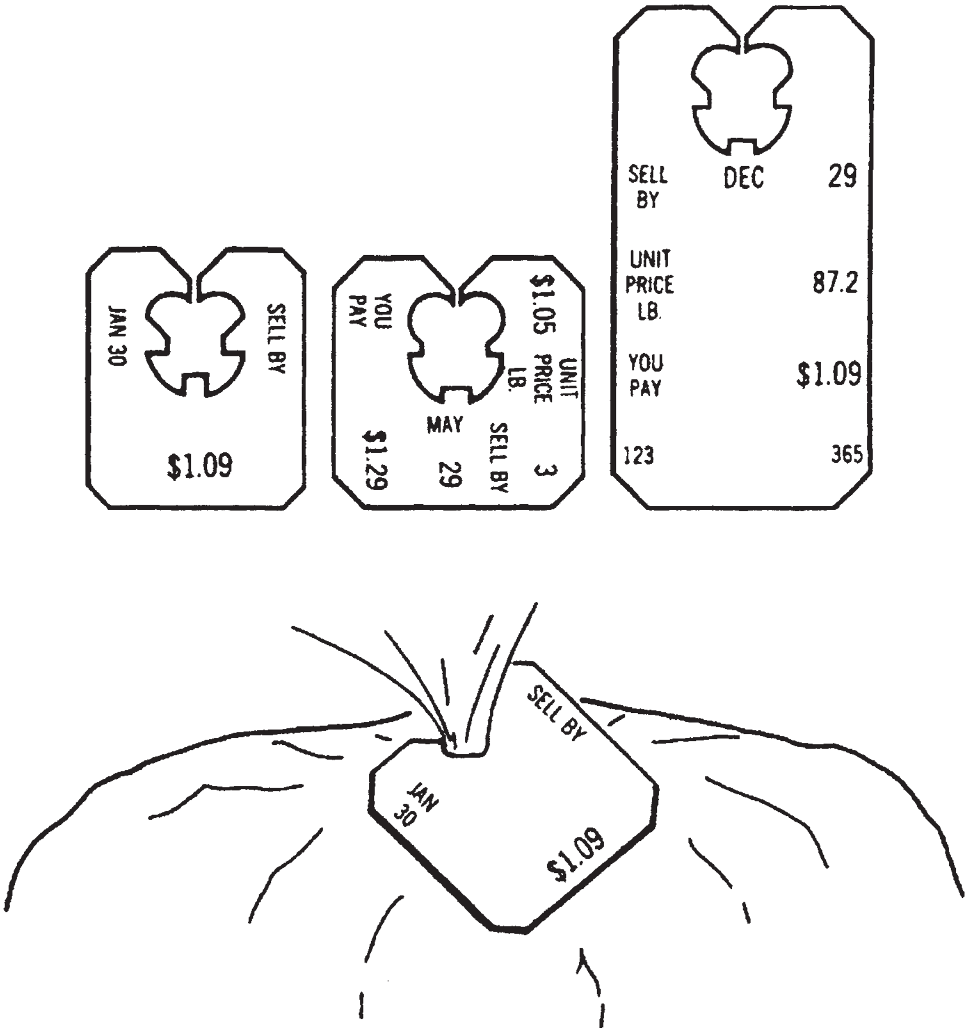

Figure 2. A plastic-clip closure for a bread bag.

furnished with various aperture sizes to accommodate the different polyethylene bag widths and thicknesses. The proper selection of aperture size can result in an almost air-tight package. Colors are available for color-coding purposes. The plastic-clip closures are provided in reels of 4000 or 5000 closures per reel.

The Striplok closures and closure-applying equipment are manufactured by the Kwik Lok Corporation, Yakima, Washington. The equipment is simple and dependable, with production speeds up to 120 bakery bags per minute. The Kwik Lok Corporation manufactures two basic machines that attach to any of the common bagging machines from Formost Packaging Machines, Inc., Woodinville, Washington; United Bakery Equipment, Compton, California; and AMF, Inc., Union Machinery Division, Richmond, Virginia. By mounting an imprinter on the closing machine, imprinting can be done on the plastic clip. Many bakeries are required to print on the package the price per pound, the unit price of the package, and the "sell by" date (see Code Marking and Imprinting). Printing on the polyethylene bag lacks legibility and is often obscured by the package graphics. Three sizes of Striplok closures are available to facilitate compliance with regulatory coding and dating requirements.

BIBLIOGRAPHY

G. E. Good, "Closures, Bread, Bag" in M. Bakker, ed., *The Wiley Encyclopedia of Packaging Technology*, 1st edition, John Wiley & Sons, New York, 1986, pp. 185–186; 2nd edition, A. J. Brody and K. S. Marsh, eds., 1997, p. 220.

COATING EQUIPMENT

Stefano Farris
Food Science and Microbiology,
University of Milan, Milan,
Italy

Coating is defined as the process of applying at least one layer of a fluid or melt substance onto the surface of a material (paper, plastic, metal) in the form of films, sheets, or shaped structures (i.e., bottles and jars). The coating process differs from laminating, which encompasses all processes in which two or more plastic or nonplastic materials (paper, aluminium foil, cellophane) are combined together to form a composite multilayers structure. Bonding between the different layers can be achieved by means of several techniques, including thermal or chemical treatment, use of tie layers (adhesives), and curing systems. As for the lamination, the main advantage arising from the coating process is obtaining composite structures having specific properties and characteristics not available in any of the individual parts taken alone. Some functional performances that can be improved, for instance, include mechanical properties, barrier to gas and water vapor, and acceptance of printing and labeling. In addition, it is a common practice to use multilayered films for food packaging applications for an economical reason. In fact, combining different films often lead to a reduction of the costs that should be incurred if monolayered structures were used for the same purpose. This is because each different single thin layer can function in a specific way (e.g., as a barrier against light or gases, as a heat or cold sealant, as a protection against abrasion), differently from the performances of a single layer.

Even if similar to other processes (e.g., lamination), some prerequisite properties of materials are specific for the coating method. These include: the capacity to be applied from high-speed rolls without forming foam; the ability to be spread uniformly and quickly over the wide surfaces of fast-moving substrates; generating fairly strong initial bonds to enable handling in the coating machinery; and rapid conversion to the final desired forms as well as the retention of necessary bonding after drying or curing. In addition, the coating process is useful and suitable only when very thin layers have to be applied (from about 0.5 to 15 μm). For thickness greater than 15 μm, solution coatings or dispersions are not often applied, except by different subsequent steps. Finally, coating when applied must be sufficiently fluid to be spread into an evenly thin layer across the web. For that reason, the only polymers practical as coatings are those that can be made directly by emulsion polymerization. Therefore, coatings are applied as solutions in organic solvents, as aqueous solutions or emulsions, as a hot melt (solid molten or softened by heat), or as a reactive liquid that solidifies by a polymerization reaction induced either thermally or by radiation. Extrusion coating, which is similar to hot-melt coating, is discussed separately (see Extrusion Coating).

Coating equipment and processes have been reviewed in several books (1–7). As a result of new materials being recently developed and the always increasing demand for high-performance solutions, an interest in the world of coatings has rapidly increased, and the opportunity of using new deposition techniques has become broad and various. Consequently, different equipments have been developed, and summarizing them in few pages will not be an easy task. Dedicated and updated textbooks provide, in an exhaustive manner, detailed information (8–10).

Coating is usually applied to the web material wound in rolls. This process requires unwinding the web, applying coating, drying, and then rewinding the web again. For this purpose, different coating and handling equipment are required. Coating equipment is intended as the collection of machines and devices used to put into practice the related process. It consists of four main components: (1) a surface treatment device, (2) a coating head, (3) a dryer or other coating solidification station, and (4) web handling equipment and accessories (drives, winders, edge guides, coating thickness controls, etc.).

SURFACE TREATMENT DEVICES

Some webs (e.g., polyolefin films) show low surface energies such that the application of a coating is very difficult to achieve. For that reason, these substrates must be treated before the coating process, in order to modify their surface energy level and hence increase the probability of a satisfactory bond between them and the coated substances. The same treatments are needed for other processes such as printing or laminating. The most important concept is that after the treatment, the surface energy of the polymer (i.e., its surface tension) must be higher than that of the coated substance to accomplish the right bond between components.

Different methods can be employed for surface treatment: corona discharge, gas plasma, etching with chemicals of continually moving webs, and gas flame treatment of molded objects for example. The most widely used is corona discharge, which consists of impinging a high energy electrical discharge on a surface, leading to a surface more suitable to adhere to other substances. Plastic film is unrolled between both a metal roll and a high voltage source, producing a voltaic arc (also called corona) which generates oxidation and other effects on the surface. In most cases, webs are treated in line (Figure 1), just before they undergo the specific coating process. This is because of the disappearing nature of the treatment, which effect gradually dissipates over time. Ozone is a byproduct of the corona-discharge method, and provision must be made for its removal.

Different methods can be used in practice for evaluating the goodness of the treatment, such as ink retention, contact angle, and water spreading. However, the most widely used is that referring to the ASTM standard method (11). Further methods have been successfully set, as the simple and rapid one to be used in production proposed by Sprecher (12).

COATING HEADS

The coating head accomplishes two functions: applying the coating to the substrate and distributing a metered amount uniformly over the surface. Metering may be combined with the coating application, or it may be carried out separately immediately following the coating deposition. There are many designs of coating heads, but they fall into three major categories: (1) roll coaters; (2)

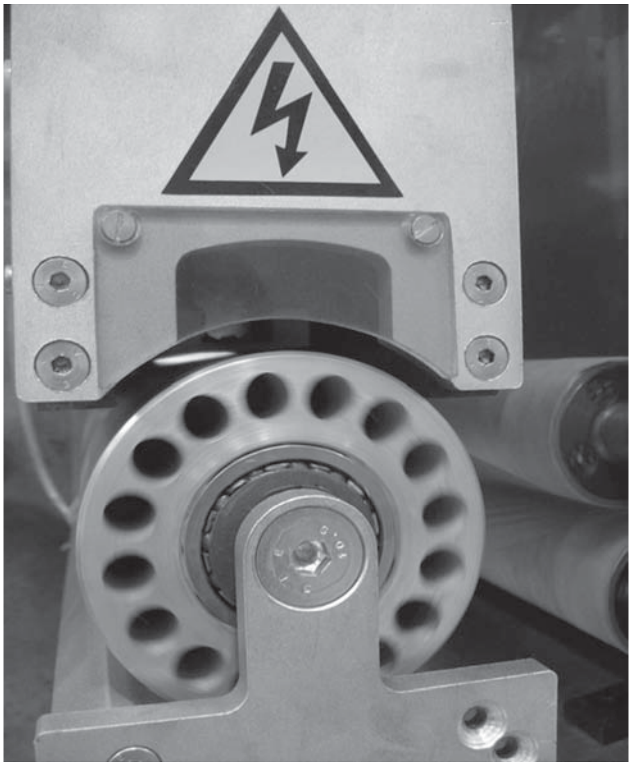

Figure 1. Corona treating equipment mounted on a coating line. Note the voltaic arc (the small clearest zone in the center). (Courtesy of Metalvuoto Spa, Roncello, Italy.)

knife, blade, and bar coaters; and (3) hot melt coating. General characteristics of most important coating heads are shown in Table 1.

Roll Coaters

Roll coaters are most widely used and can be subdivided into several major types: direct, reverse, gravure and calender coaters.

Direct Roll Coaters. In this case, substance is deposited by contact between the moving web and the rotating applicator roll. The roll picks up coating from a specific source, either a different roll (transfer roll) or a bath, and then transfers it onto the web surface. The web carrying roll and the coating applicator roll rotate in the same direction. The thickness of the coating can be modified by the speed of both the application roll and the web, and also by considering the physical properties of the coating and those of the web. In fact, the more viscous the coatings and the lower the speeds for their application, the thicker will be the final dry coatings. Conversely, the thinnest will be obtained with low-viscosity coatings applied at high speeds. The coating is split evenly between the roll and the substrate as shown in Figure 2. Coating splitting produces an uneven surface, which sometimes can be a problem. For that reason, a steel backing roll covered by rubber represents a useful tool for accommodating some irregularities in thickness of the substrate. This is particularly evident when working with fibrous webs (e.g., paper). They offer a sponge-like surface that quickly absorbs water from wet coating. On one hand, this speeds the drying of coating; on the other hand, it may interfere with the achievement of smooth and not porous coatings. As a result, several primers of polymers can be used in order to avoid the coating penetrate into the substrate as paper. On the contrary, plastic films do not absorb water or solvent-dissolved coatings. However, also for this kind of substrate, primers are often used to improve the adhesion between the substrate itself and the coating—that is, to bond the coating to the film. Many different coating heads utilize the direct roll-coating principle. A squeeze-type roll coater is shown in Figure 3. Direct roll coaters can be used to coat sheeted material as shown in Figure 4. The coating is metered in a gap between accurately machined metering and applicator rolls. Sheets are fed through a nip formed by applicator and carrier rolls. Direct roll coaters are used widely for packaging materials: paper sizing, paper color coating, overcoating of blister packaging board, and heat seal coating.

Kiss roll coaters apply the coating to the web from a pan (Figure 5). The amount of coating deposited is not controlled by the coater; therefore, kiss roll coaters usually employ a metering device, such as wirewound rod, to remove the excess coating. Such a rod is installed immediately after the coater and is a part of the coating head. Kiss roll coaters can be also run in the direction opposite to the web travel. In such cases the web wipes the roll clean.

Transfer roll coaters of modern design are used for deposition of very lightweight coatings accurately (Figure 6). One of the important uses is the application of 100%

Table 1. Characteristics of Various Coaters

Coating System	Deposit Weight Range (g m^{-2})	Coating Speed Range (m min^{-1})	Viscosity Range (cP)
Knife-over-roll	10–100	150	1000–30,000
Floating knife	2–30	150	500–15,000
Air knife	3–30	500	100–1000
Blade	5–20	100–1200	2000–10,000
Wirewound rod	5–20	150	100–2500
Reverse roll	25–300	150	300–20,000
Kiss/squeeze	10–30	300	50–2000
Transfer roll	0.3–50	300	300–150,000
Gravure	2–25	10–400	100–10,000
Slot orifice	20–600	300	400–200,000

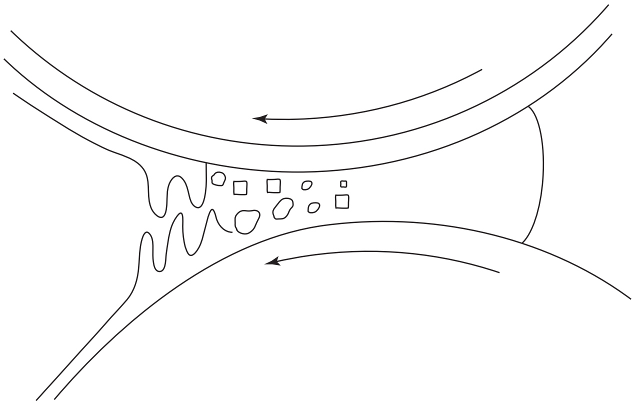

Figure 2. Coating splitting.

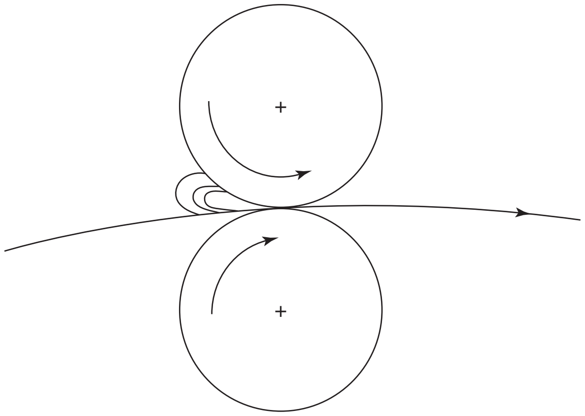

Figure 3. Squeeze coater.

solids radiation curable silicone release coatings, which are used for pressure-sensitive adhesive labels and other products. The transfer roll coater is a direct roll coater. The rubber-covered applicator roll is run 5–25 times faster than the transfer roll, and this decreases the amount of coating transferred to the substrate by that factor.

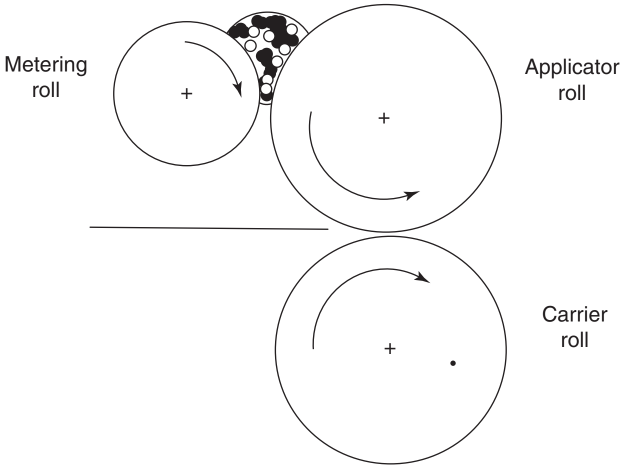

Figure 4. Direct roll sheet coater.

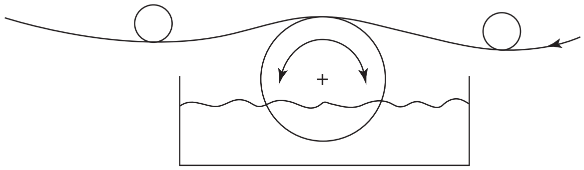

Figure 5. Kiss-roll coater.

Reverse Roll Coaters. The main feature of the reverse roll coater is that the applicator roll rotates in the direction opposite to the web travel (therefore, reverse roll) and transfers the coating by wiping. These coaters are versatile machines. Among the advantages of reverse roll coating are (a) the possibility to handle a wide range of coating thickness and viscosities and (b) greater weight of coatings. Solids in the range of 10% (w/w) are typical. Moreover, the reverse roll coating leads to a more thorough and uniform deposition of the wet coating and a smoother dry coating as well. In addition, this kind of equipment can work at higher line speeds than the direct system, achieving excellent results while handling weak webs. Solvent solutions, aqueous coatings, and less frequently hot melts are coated on these machines. Reverse roll coaters are expensive; rolls must be accurately machined. These coaters are available in several designs: Feed location may be varied from nip to pan; three or four rolls may be used. In the case of a nip-fed coater as shown in Figure 7, the coating is delivered to the nip between metering and applicator rolls, and dams are used to contain the coating. A gap set between these two accurately machined rolls determines the amount of coating carried by the applicator roll. The web usually runs faster than the applicator roll, and the amount of coating deposited depends on the ratio between the speed of these two rolls (wipe ratio) as well as on the gap between metering and applicator rolls.

Gravure Coaters. These machines are inexpensive and highly reliable, but limited to the coating thickness and viscosity that can be handled. The main advantage of this system is related to the possibility of controlling

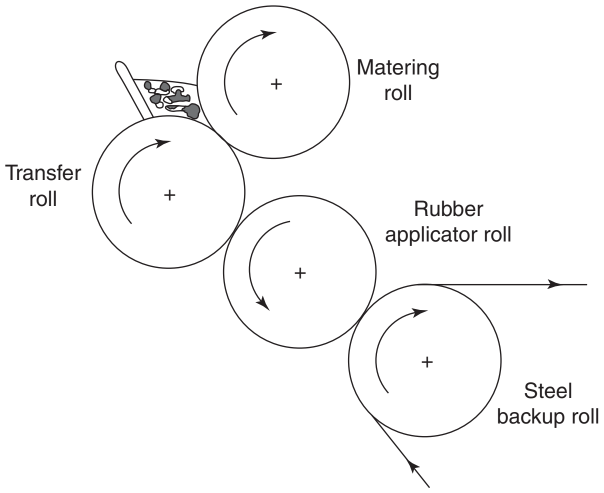

Figure 6. Transfer coater.

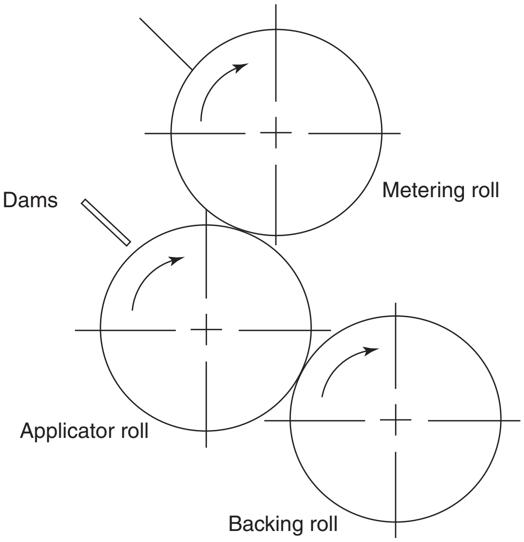

Figure 7. Nip-fed reverse roll coater.

accurately the amount of substance applied on the web (i.e. the thickness of dry coatings) as well as its homogeneity. It is agreed that gravure coating represents the most uniform and reproducible system to coat moving web of material. An engraved chrome-plated (sometimes ceramic coated) copper roll is wetted with the coating, excess is removed by a doctor knife (scraper) (Figure 8), and the coating remaining in the engraved cells below the roll surface is transferred to the web at the gravure roll/backup roll nip (Figure 9). Three engraving patterns are commonly used for coating purposes: pyramidal, quadrangular (truncated pyramid), and tri-helical. The amount of coating depends on the liquid volume retained in the cells—that is, on the cell depth and their density, referred to as *screen* or *ruling* (the number of cells per unit length). The coarser the screen, the larger the diameter and depth of cells and the higher the deposit. It is important that the amount of coating entrapped in the depressions of the gravure roll remains constant over the life of the roll, guaranteeing a virtual constant uniformity during the whole production process. The fluid viscosity must be sufficiently low to allow the transfer of the coating from the cells to the web at nip pressure. Thickness typically ranges between 3 and 25 μm, even if lower values (0.5 μm) can be easily obtained. In the direct gravure arrangement (Figure 9), the engraved roll contacts the web directly. In offset gravure the coating is first transferred to a rubber-covered roll and then transferred to the web. In this case, it should be important to use a covering elastomer resistant to solvents eventually present in the coating solution. Offset gravure allows the use of higher nip pressure and is therefore more suitable for coating rough-surface substrates. It also allows the coating to level on the roll surface before its transfer to the web. Different matrices, substances, and formulations can be used as coatings to be applied through this system. Latexes, solvent-based coatings, water-based coatings, hot melts, and reactive (curing) coatings are the most frequently employed. Gravure coating is widely used for various decorative and functional lightweight coatings on plastic films, paper, and other packaging substrates. The same technique is suitable for printing, wherein coating deposition takes place only to limited areas of the substrate. In this case, a given roll delivers a fixed amount of coating; that is, it deposits noncontinuous coating.

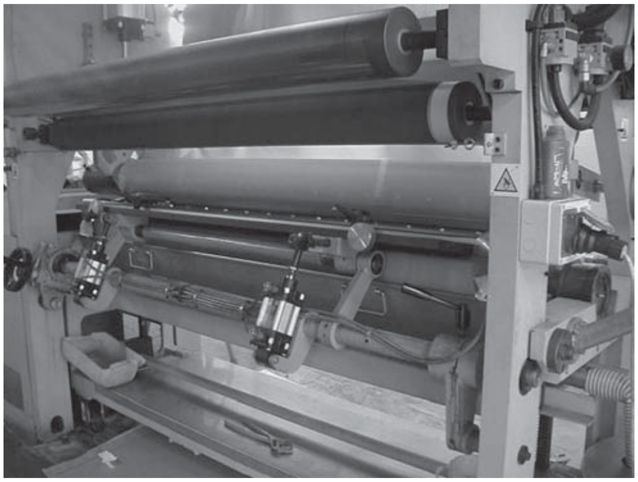

Figure 8. Gravure coater showing the doctor blade supported by two pistons. (Courtesy of Metalvuoto Spa, Roncello, Italy.)

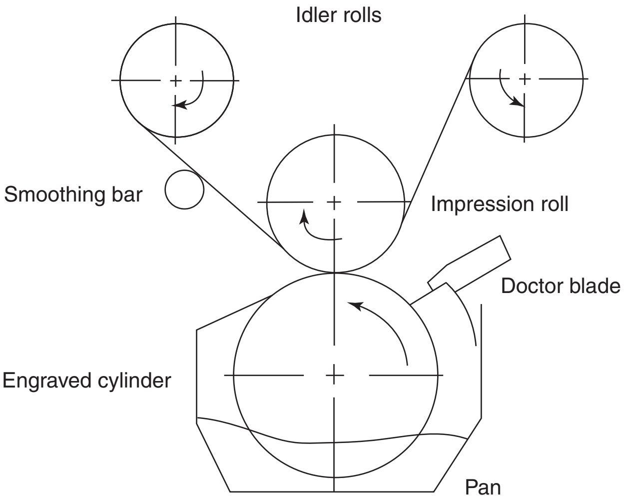

Figure 9. Direct gravure coater.

The most recent machines are able to handle different substrates continuously—that is, without arresting the whole plant in order to substitute the coated roll with another one. Hence, the coating application can take place by replacing automatically online the just-coated web with a new one previously mounted on the machine (Figure 10). Obviously, to avoid the stop of the coating line, the different rolls must have the same width and have to be coated with the same matrix. The final result will be the increased line speed in the coating process and the enhancement of the output.

Calender Coaters. The calendering process involves squeezing a polymeric material between steel rolls into a

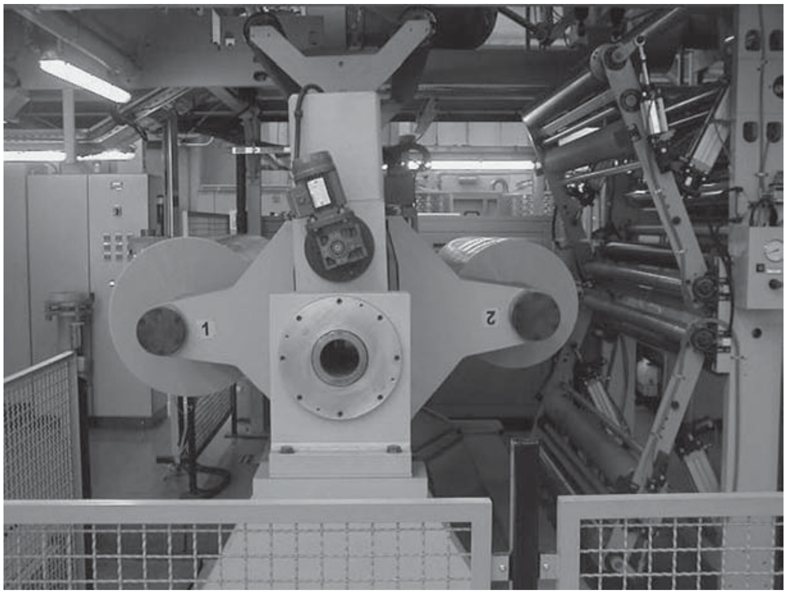

Figure 10. Two rolls simultaneously placed on the same coating line. Roll 2 (working) will be automatically substituted by roll 1 (not working). (Courtesy of Metalvuoto Spa, Roncello, Italy.)

thin sheet. The formed sheet may be then laminated to a substrate. Rubber and PVC are most often used for calender processing. Calendering is rarely used for manufacturing packaging materials.

Knife and Bar Coaters

Knife and bar coaters are metering devices that remove excess coating and allow only a predetermined amount to pass through.

Knife-over-Roll Coaters. Knife-over-roll is a useful inexpensive method for the application of coating, having both high viscosity and heavy weights. As a result, it is primarily used to coat paper and textiles. A knife-over-roll coater consists of a knife placed against a roll. The knife may be either straight-edged or "J"-shaped, depending on the specific application. The coating weight is adjusted by setting a gap between the roll and the knife. An excess coating is delivered to the bank before the knife, and the desired amount is metered by the gap. An accurately machined steel roll and knife are used (Figure 11). In another version of a knife-over-roll coater, a rubber-covered roll is used and the coating weight is determined by the gap and rubber hardness (its capability to deform because of hydraulic pressure).

Other Knife Coaters. Knife coaters are used in many other configurations: floating knife, knife-over-blanket, knife-over-channel, and inverted knife. These methods are used more frequently in the textile industry.

Blade Coating. Flexible-blade coating is the dominant process for applying pigment coating over paper and board. Clay coatings give a smooth and printable surface. Blade coating processes are suitable for high-speed application such as required in paper converting. The coating head consists of a coating applicator, such as roll or fountain, which applies an excess of coating to the paper. The excess coating is removed by a blade (Figure 12).

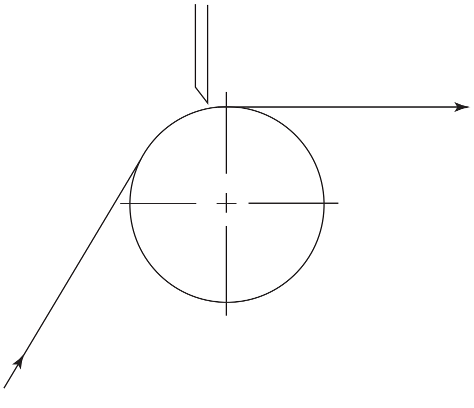

Figure 11. Knife-over-roll coater.

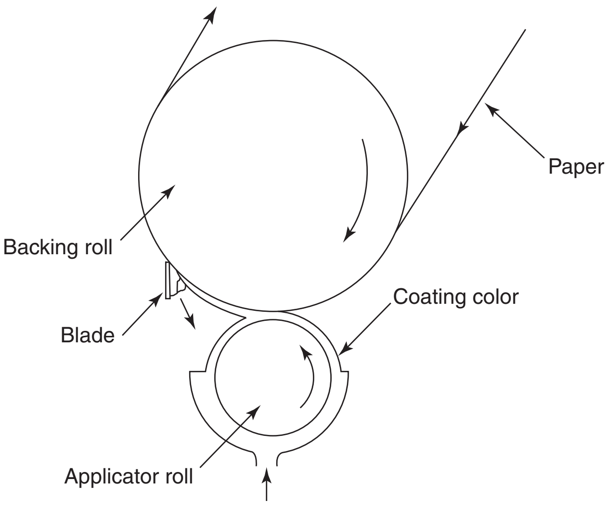

Figure 12. Blade coater.

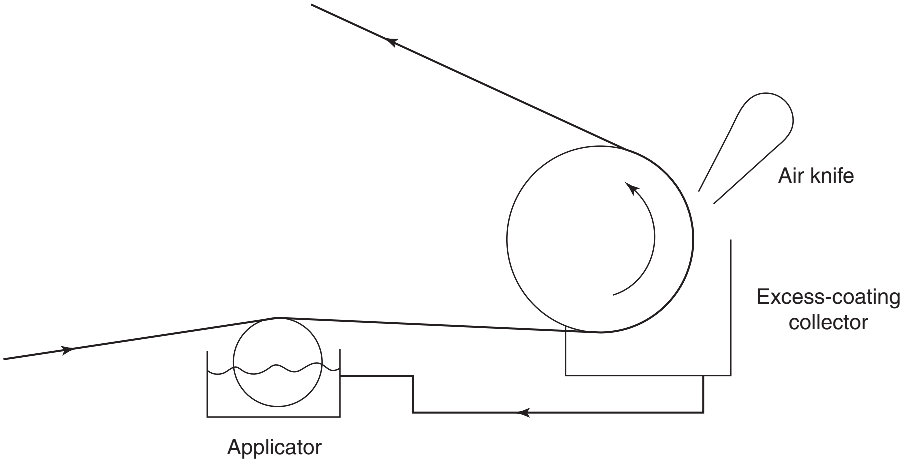

Figure 13. Air-knife coater.

Several modifications of blade coaters are available employing different blade designs, different methods of applying and regulating blade pressure, and different ways of applying the coating to the paper. Machines capable of applying coating to both sides of the web are available.

The air-knife system consists of a head with a narrow slot emitting a ribbon of pressurized air through nearly the width of the web being coated. In air-knife coating an excess of material is applied to the web surface usually by a kiss-roll applicator or by spraying as a wet matrix to be dried as quickly as possible. The excess is removed by the air knife, wherein pressurized air is forced into the head and is accelerated at the slotted nozzle. The escaping airstream impinges on the coated web and removes excess coating (Figure 13). Air-knife coaters provide an even thickness of the coating rather than a flat-surfaced coating. It is the preferred method for coating paper, although in the recent years it is being replaced by more developed blade coaters for paper-coating applications.

Wirewound-Rod Coater. *A* wirewound-rod coater (Meyer rod) is a simple metering device widely used in applying lightweight coatings over film and paper packaging materials. The coating is firstly applied by an applicator, usually a kiss roll, and then uniformly spread by a rod wound spirally with stainless-steel wire; finally, the excess of coating is removed by the scraping action of the rod. Usually, the wire-wound rod is rotated counter to the rotation of the web, allowing a more precise control of the process. Moreover, the rod is rotated to help dislodge any particles that might become trapped between the wire and the web and to ensure uniform wear of the wire. The rod wipes the surface clean, except what escapes through the spaces between the wires. The thickness of the wet coating can be easily established by selecting the diameter of the wire winding on the rod. In particular, the following equation can be taken into consideration for this purpose:

$$K = D\left(0.5 - \frac{\pi}{8}\right) = 0.1073(D)$$

where K and D are, respectively, the thickness of the wet coating and the diameter of the wire, expressed in the same units. As it can be seen, K is practically 10 times less than D. It means that, for instance, a wire 125 μm in diameter will spread a wet coating 12.5 μm thick. In some cases a rod wound with two wires could be used, with the second one of lesser diameter than the first. This allows us to spread coatings thicker (about 500 μm) than those obtained by using a single wire and to provide for coatings that flatten out faster. Wire rod coating is particularly useful to lay down thin layers of PVDC latex to paper. In general, paper should not be extensible, to avoid the fact that the tension developed to hold the web tightly against the rod coater will stretch the extensible film (such as a polyolefin) enough to jeopardize the process. On the contrary, stiff plastic films like PET as well as cellophane, papers, and paperboards are suitable to be worked in rod coaters.

Hot Melt Coating

Hot melting coating concerns the application of molten polymers characterized by an intermediate molecular weight. It can be considered as a variation of extrusion coating. Both processes use a heated coating material to be applied onto a moving web. The major difference is linked to the viscosities, much lower for the hot melting coating. Another further difference concerns the magnitude of pressure applied during deposition of the coating. In fact, hot melts are applied with little pressure. Different materials can be used in the hot melting process, such as waxes, resins, and thermoplastics of low molecular weight. However, blends of polyolefins and poly(ethylene-vinyl acetate) with resins and waxes represent the majority of applications in food packaging. In particular, these hot melts are widely used to obtain (a) heavy coatings to wrapping cases for waterproofing and (b) lighter layers to food cartons for frozen foods. Typical hot melt coating methods include: slot-orifice coating, curtain coating, and roll coating.

Slot-Orifice Coating. In the slot-orifice coating, the coating is forced through a narrow slot extending the full width of the web. The slot die is designed to give a uniform coating thickness across the width. A slot-orifice coater is widely used for manufacturing hot-melt

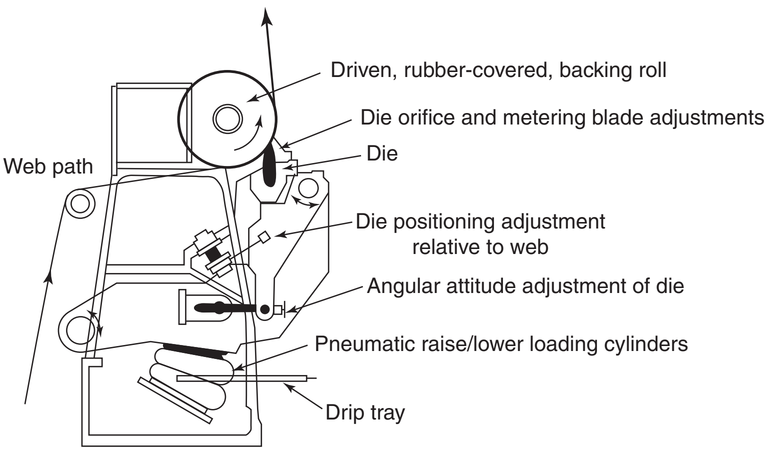

Figure 14. Hot-melt slot-orifice coater. (Courtesy of Black Clawson Co.)

pressure-sensitive adhesive packaging tapes (13) and for applying waterproof coatings over paper. It also found applications in aqueous emulsion coating. A slot orifice coater is shown in Figure 14.

Curtain Coating. Curtain coating is similar to slot-orifice coating, except that the liquid curtain coming from the die is allowed to drop down some distance to the material to be coated. The slot width is adjustable and the flow is regulated by the slot width, by the liquid level (in weir-type coaters), or by pressure and pump speed in enclosed-head coaters, as well as by the distance between the slot and the coated material, which determines the acceleration of the curtain. This technique is used for heavier coatings. In the packaging area, curtain coating may be employed to deposit a hot wax coating over corrugated board.

Roll Coating. Both direct and reverse roll methods can be used for the application of hot melt coatings to the substrate. Moreover, the rolls used for spreading the coatings can be either smooth or engraved.

The application of the hot coatings usually takes place at speeds ranging from 100 to 500 $\mathrm{m\,min^{-1}}$ at coating weights of 3 to 600 $\mathrm{g\,m^{-2}}$.

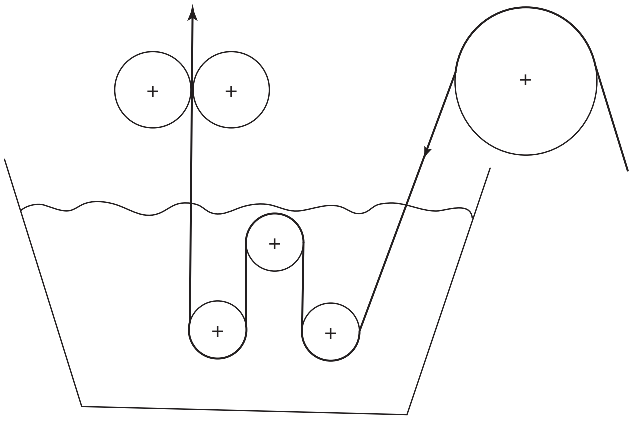

Figure 15. Sawtooth saturator.

SATURATORS

The saturation or impregnation process is used to treat paper and paperboard with a polymeric binder to improve the web's strength, barrier properties as packaging material, and resistance to water and grease. The process consists of immersion of the web into a coating bath, or applying an excess of coating on both sides and then squeezing or scraping to remove the excess. The coating may penetrate the web or most of it may remain on the surface, depending on the product needs.

Saturating machines consist of a web-immersion section and a metering section. Several saturating arrangements are used. Figure 15 shows a conventional sawtooth saturator followed by squeeze-roll metering. Other types of metering arrangements are inflatable bars, bar scrapers, doctor blades, and similar devices.

DRYING

Coatings applied as solutions or emulsions must be dried in order to remove the liquid vehicle. Heat and mass transfer take place simultaneously during the drying process. Different methods are used in commercial practice, including convection drying with heated air; hot air impingement; infrared; conduction heating; and radiofrequency heating.

In the *convection* drying method, the wet web is passed through a tunnel oven heated by a flux of hot air forced in the same direction (sometimes in the opposite direction) as the web.

Impingement drying consists of a forced air flux able to dry the wet web more rapidly than convection drying. This is because the method exploits the increased heat transfer achieved by blowing rapidly heated air over the web surface.

Infrared drying is carried out by using a heating source emitting infrared rays. Indeed, infrared radiation is usually used in combination with convection and impingement drying, to raise quickly surface temperatures and hence to increase the efficiency of the solvent removal by forced air.

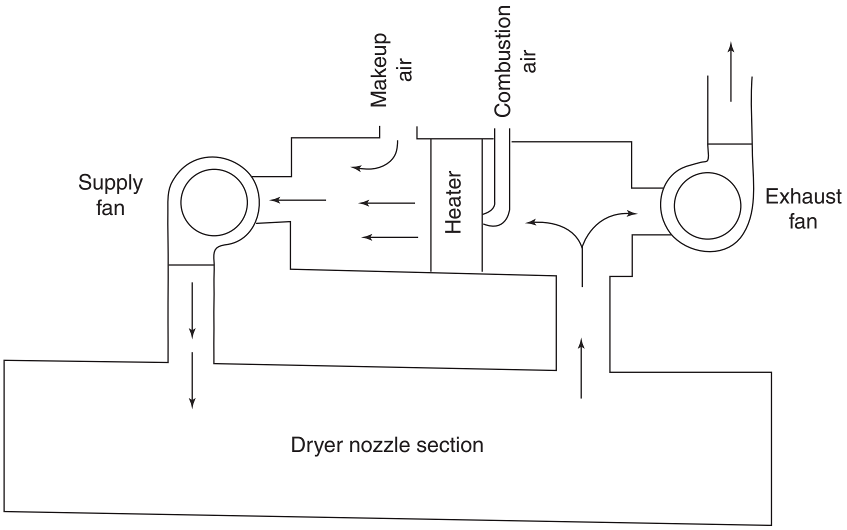

Figure 16. Airflow in a convection oven.

Conduction drying is obtained by the direct contact of the web with a heated surface. The final dried substrate (paper, paperboard, pulp, and laminations of porous webs) is generally obtained very quickly, usually using heated rotating cylinders.

Radio frequency (or dielectric heating) is a powerful drying method especially for heavy coatings and water-based systems.

Drying is a fundamental step in the coating process. Incomplete or partial drying could lead to serious problems affecting the further converting phases, such as bubble formation between layers, haziness, and separation of layers, among others. It is also to avoid the overdrying a web.

The drying equipment also has a means of vapor removal and recirculating and heat-exchange equipment to conserve energy. Figure 16 schematically shows the airflow in a convection dryer. If a coating from a solution in an organic solvent is used, the solvent vapor must be removed from the exhaust in order to satisfy the environmental laws and to decrease solvent costs. Solvent adsorption on activated carbon, incineration, or condensation in an inert-gas dryer are used. Drying equipment (see also Figures 17 and 18) may be subdivided according to the heat-transfer mechanism or according to web handling as listed in Table 2.

Extruded, hot-melt, and wax coatings do not require drying and are solidified by chilling. Such coating machines require considerably less space than do the coating lines with drying ovens.

Some coatings are applied as reactive monomers or polymer/oligomer/monomer blends and may be cured by either ultraviolet or electron-beam irradiation. Such irradiation units are incorporated into the coating line.

WEB HANDLING

Coating machines may apply the coating or the adhesive to the packaging material supplied as a continuous web on

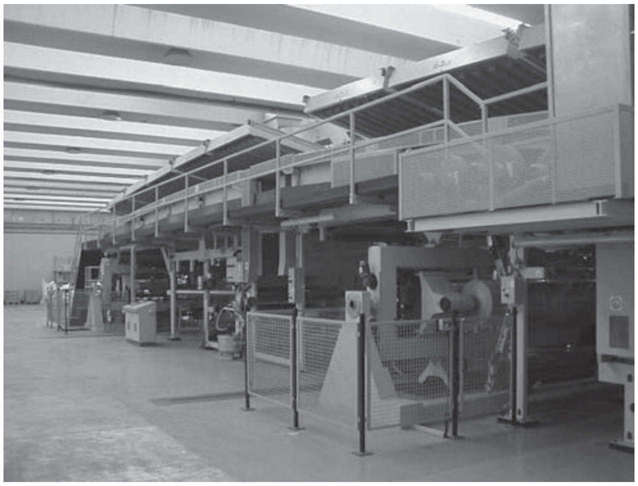

Figure 17. Coating line, with the extensive overhead convection dryer system. (Courtesy of Metalvuoto Spa, Roncello, Italy.)

Figure 18. In-line infrared drying equipment (enlightened part). Note the engraved chrome-plated roll partially covered by the metallic pan. (Courtesy of Metalvuoto Spa, Roncello, Italy.)

Table 2. Drying Equipment

Heat Transfer	Web Handling
Convection dryers	
Parallel air flow	Idler-supported
Impingement air	Conveyer dryers
Through dryers	U-type dryers
Infrared radiation dryers	Arch dryers [a]
Near infrared (electric)	Tenter frame dryers
Far infrared (electric or gas)	Floater dryers
Conduction dryers	
Hot roll dryers	

[a] An arch dryer including winding, coating, and laminating stations is shown in Figure 16.

a roll, and the finished product is rewound after completion of the operation (see Roll Handling). Unwind and rewind stands, web-carrying equipment, and web controls and other accessories are used (14). Controls are needed to track the web properly on the machine and may consist of tension-sensing devices and means of controlling the tension and of edge-sensing devices and means of keeping the web centered on the coating machine. Many packaging materials are coated as sheet, requiring sheet-feeding and sheet-handling devices. There is less of a choice between various coating heads for sheet coating.

BIBLIOGRAPHY

1. D. Satas, *Web Processing and Converting Technology and Equipment*, Van Nostrand Reinhold, New York, 1984.
2. H. L. Weiss, *Coating and Laminating Machines*, Converting Technology Co., Milwaukee, WI, 1977.
3. G. L. Booth, *Coating Equipment and Processes*, Lockwood Publishing, New York, 1970.
4. E. D. Cohen and E. B. Gutoff, *Modern Coating and Drying Technology*, VCH Publishers, New York, 1992.
5. W. E. Brown, *Plastics in Food Packaging: Properties, Design, and Fabrication*, Marcel, Dekker, New York, 1992.
6. S. E. M. Selke, J. D. Culter and R. J. Hernandez, *Plastics Packaging: Properties, Processing, Applications, and Regulations*, 2nd edition, Hanser Carl, Munich, 2004.
7. G. L. Robertson, *Food Packaging: Principles and Practice*, Marcel, Dekker, New York, 1993.
8. A. A. Tracton, *Coatings Technology Handbook*, Taylor & Francis, Boca Raton, FL, 2006.
9. R. Ryntz and P. Yaneff, *Coatings of Polymers and Plastics*, Marcel, Dekker, New York, 2003.
10. M. J. Forrest, *Coatings and Inks for Food Contact Materials*, Rapra Review Report, Vol. 16, No. 6, Report 186, 2007.
11. ASTM, *Standard Test Method for Wetting Tension of Polyethylene and Polypropylene Films*, D 2578-84, Book of Standard, 08.03, Plastics, American Society for Testing and Materials, Philadelphia, 1988.
12. T. W. Sprecher, "Testing Corona Treatments", *Paper, Film and Foil Converter* **57**(11), 114, 1983.
13. D. Satas, *Handbook of Pressure Sensitive Adhesive Technology*, Van Nostrand Reinhold, New York, 1982.
14. D. R. Roisum, *The Mechanics of Winding*, TAPPI Press, Atlanta, 1994.

CODE, BAR

Henri Barthel
GS1 Global Office, Brussels,
Belgium

A *bar code* may be defined as a series of bars and spaces arranged according to the encodation rules of a particular specification in order to represent data. Its purpose is to represent information in a form that is machine-readable. Bar codes are read by scanning devices that are programmed to analyze the structure of the bars and spaces and transmit the encoded data in electronic format. These data can then be stored on a file or transmitted to a computer for processing.

Techniques other than bar codes achieve the same objective: capturing automatically data encoded using a particular technology. These include optical character recognition, magnetic stripe, and radio-frequency identification. The concept of encoding and reading data automatically is called *automatic data capture* (ADC).

BENEFITS OF BAR CODES

The main benefits of bar codes are *speed* and *accuracy*. Capturing data automatically by reading a bar code can be done in a fraction of a second, much faster than manual key entry. It is commonly agreed that an operator doing key entry makes one error for every 300 characters typed. Reading bar codes makes data capture almost error-free. The error rate depends on the type of bar code and equipment being used, but usually it is lower than one error per 1,000,000 readings.

BAR-CODE SYMBOLOGIES

A *bar-code symbology* is a set of rules describing the way bar and spaces have to be organized to encode data characters.

Since the invention of the bar code concept in the United States in the late 1950s, hundreds of bar-code symbologies have been developed, but only a few of them are actually being used on a large scale.

Typically, a symbology is qualified as being discrete or continuous. In a discrete symbology, the spaces between symbol characters do not contain information because each character begins and ends with a bar. In a continuous symbology, there is no intercharacter gap; that is, the final element of one symbol character abuts the first element of the next symbol character, and all the elements carry data contiguously. The most popular bar-code symbologies are briefly described below.

Code 39 was launched in 1975. It is widely used for industrial applications. Code 39 is a discrete, variable-length symbology encoding the 36 numeric and uppercase alpha characters (A–Z, 0–9) and seven special characters: space, dollar sign ($), percent (%), plus (+), minus (–), dot (.), and slash (/). A symbol character is composed of nine elements, five bars and four spaces. An element is either wide or narrow. There are three wide elements and six narrow elements in a symbol character. A Code 39 symbol begins with a start character and ends with a stop character. It can be read from the right to the left and from the left to the right.

Interleaved two of five (abbreviated ITF) has been found to be well adapted to the materials and printing conditions frequently used on fiberboard cases. It is a continuous symbology encoding only numeric digits. A pair of digits is represented by five bars and five spaces. One of the pair is represented by the dark bars and the other by the light bars, and the dark and light bars are interleaved. Because the digits are represented in pairs, the symbol can only encode even number of digits. In addition to the digit characters, there are two auxiliary characters used as guard bars at the beginning and at the end of the digit representation. The symbol is designed to be read bidirectionally by fixed or portable scanners.

Code 128 was introduced in 1981 in response to the need for a compact alphanumeric code symbol that could be used to encode complex data. The fundamental requirement called for a symbology capable of being printed by existing data-processing printers. Code 128 uniquely addresses this need with the most compact, complete, alphanumeric linear symbology available. In addition, Code 128 has been designed with geometric features to improve scanner reading performance and to be self-checking.

EAN/UPC was developed in the late 1960s when researches were conducted in the United States to improve the efficiency of checkout operations in retail stores. EAN/UPC is a continuous symbology encoding fixed-length numeric digits. Several variants exist, known as EAN-13, UPC-A, EAN-8, and UPC-E. In addition, the symbology enables to encode two small symbols encoding two and five digits. These are called add-ons because the information they contain supplement the main symbols. A symbol character is composed of seven modules, two bars, and two spaces. A bar or a space is composed of one to four modules. An EAN/UPC symbol begins and ends with a guard pattern. In the EAN-13, UPC-A, and EAN-8 version, a center pattern separates the symbol into segments that can be read separately by a decoding equipment, thus making the symbol omnidirectionally readable. The EAN/UPC symbology is widely used to encode the identification number of consumer products.

The symbologies described above are all linear symbologies. The symbol is always formed of a single row of symbol characters. Since the early 1990s, two-dimensional symbologies have been developed. Some are qualified as multirow symbologies consisting of two or more vertically adjacent rows of symbol characters. Others are known as *matrix symbologies*, which take the form of a two-dimensional graphic that is decoded in its entirety and not row by row. Two-dimensional symbologies can encode a large amount of data in a small amount of space.

PDF417 is a two-dimensional, stacked bar-code symbology. In PDF417, the basic data unit or minimum segment containing interpretable data is called a codeword. Every codeword in the symbol is the exact same physical length, and each codeword can be divided into 17 equal modules. Within every codeword, there are four bars and four spaces. The minimum number of modules of any bar or space is one; the maximum is six. The PDF417 symbology defines 929 distinct codewords and supports 12 modes. Each mode specifies the meaning of the codewords. The standard modes are Extended Alpha Numeric Compaction Mode, Binary/ASCII Plus Mode, and Numeric Mode. The number of data characters that can be encoded in a PDF417 symbol depends on the mode being used. In the extended alphanumeric compaction mode, the maximum number of ASCII characters per symbol is 1850. In numeric mode, a symbol can encode a maximum of 2725 digits.

Data Matrix is a two-dimensional matrix symbology that is made up of nominally square modules arranged within a perimeter finder pattern. Each Data Matrix symbol consists of data regions that contain nominally square modules set out in a regular array. The data region, or set of data regions and alignment patterns, is surrounded by a finder pattern, and this is in turn surrounded on all four sides by a quiet zone border. The number of data characters per symbol is up to 2335 alphanumeric characters or 3116 numeric only characters. Data Matrix Symbols are read by two-dimensional imaging scanners or vision systems. Most other scanners that are not two-dimensional imagers cannot read Data Matrix. Data Matrix Symbols are designed for use with applications that involve imaging scanners throughout the supply chain.

DATA CONTENT

The purpose of bar-code applications is to capture data automatically and to process these data in computer applications. Rules are therefore required to specify the way data should be encoded in a symbol. Similarly, when reading a bar code, there must be a way to know accurately what data have been captured. Three methods exist to specify the rules of encoding and decoding data in bar-code symbols:

1. The first method is to establish a one-to-one relationship between the symbology and the data content. In this case, a particular symbology is exclusively reserved to carry certain types of data. The EAN/UPC symbology is an example of this method. EAN/UPC bar codes always carry a number that is a unique identifier of the item on which the bar code is affixed.
2. The second method is based on conventions defined either by a party for its own applications or established on the basis of mutual agreements between two or more parties. The conventions describe the symbology to be used and specific rules indicating the way data elements are to be encoded. This method is appropriate only in internal or closed applications, because the rules are relevant only to the parties agreeing to follow the convention.
3. The third method is based on the concept of *data identifiers*, which are prefixes used to define data

fields. Each prefix uniquely identifies the meaning and the format of the data field following it. Two sets of identifiers have been standardized and are used in many bar-code applications.

In the late 1980s, a body called FACT (Federation of Automated Coding Technologies) was formed in the United States to examine existing standards and to produce materials that would permit coexistence of standards from all industries. A dictionary of FACT data identifiers has been put together and was formally approved as an American National Standard by the American National Standards Institute (ANSI) in 1991. On December 31, 1992, the FACT organization was dissolved. Prior to its dissolution, the Subcommittee 8 of Accredited Standards Committee (ASC) MH10 agreed to continue the maintenance of data identifiers. ANSI MH10 identifiers are composed of one alpha character preceded by up to three digits. These data identifiers usually have to be complemented by industry guidelines providing additional clarifications regarding the definition and format of the data fields.

Following the requirements of their membership, EAN International and UCC jointly developed a system of *application identifiers*, permitting the encodation of a wide range of information. EAN International and UCC merged into one single global organisation called GS1 in early 2005. The GS1 system is characterized by the management of a unique identification scheme for products, services, and locations, by a clear and unambiguous definition of data elements and by the strict recommendation of protected symbologies, offering a high level of security.

When considering the use of data identifiers for their bar-coding applications, users should consider the following guidelines:

- *Made-to-Order Products*. When the products are manufactured for and shipped to individual customers operating in a specific industry sector, the ANSI MH10 data identifier set can be suitable.
- *Products for General Distribution*. When products are traded with more than one customer and possibly with more than one industry sector, the GS1 application identifier set should be used.

APPLICATIONS

The bar-coding technology has gained wide acceptance in numerous applications. Today, virtually all packages, from the smallest units intended for sale to a consumer to the biggest transport units, bear one or several bar codes carrying their identification number and other data relevant to the parties shipping, carrying, or receiving goods.

Scanning at retail point of sale is a major application using bar-code technology. Millions of stores around the world have implemented scanning systems relying on the GS1 identification number and the associated EAN/UPC bar-code symbol. Scanning at point of sale enables us to automatically register the sales through price-lookup files. It also opens up the opportunity to implement a wide range of applications such as inventory management, automatic reordering, and sales analysis.

A rapidly growing field of applications using bar-coding technologies lies within the supply chains. Goods ready for shipment by a supplier are packed, and each package is numbered and bar-coded with a unique number. Before the physical delivery of the merchandise, the supplier sends an electronic message to the delivery point, advising about the arrival of the goods. This electronic message contains the unique identification number of each package and the description of its contents. When processed by the receiver, the electronic message is matched against the original purchase order and stored in a computer database. When goods arrive, a bar-code reading device scans the unique number identifying the goods, and the computer makes the link with the information previously stored. The system is then able to show what has to be delivered, and the actual delivery can be checked. Inventories can then be updated automatically, because the information is already available in electronic form.

PRINTING BAR CODES

Virtually any printing technology can be used to print bar codes, provided that it is accurate enough to achieve the right level of required quality. The printing processes fall into two categories: commercial and on-site. The choice between these two approaches is determined by the nature of the information to be encoded and the number of codes to be printed. Typically, if the information is static (e.g., the identification number of a product to be placed on a package) and if the number of codes to be printed is large, the traditional commercial method using film masters is appropriate. If the information is variable (i.e., different for each item or short series of items or if the quantity required is small), then on-site printing processes should be used.

The commercial printing techniques use a master image of the bar code on the printing plate. Film masters are very accurate and are available on the market from commercial companies. The printing process itself generally generates a print gain due to the ink viscosity, the pressure of the printing plate, or the type of substrate being printed. This print gain can be evaluated and compensated in the film master itself by reducing the size of the bars. The party ordering the film, the film master supplier, and the printer must work closely together to achieve a quality bar code.

The on-site printing techniques may use a piece of hardware acting as graphics controller between the computer and the printer. They may also use “intelligent” printers incorporating the controller equipment. Finally, software is commercially available to generate the picture of the bar code and send it to a printer. The printing systems may be based on character-by-character impact, on serial dot-matrix, or on linear-array technologies. The choice of the appropriate technology depends on many parameters linked to the application requirements.

READING BAR CODES

Many types of devices are commercially available to read bar codes. They all illuminate the symbol and analyze the resulting reflectance. Areas of high reflectance are interpreted as spaces, while areas of low reflectance do represent bars. The reflected pattern of bars and space is converted to an electric signal that is then digitized. The decoder assigns a binary value to the signal and forms a complete message. The message is checked by the decoder's software and transformed into data according to the appropriate decoding algorithm relevant to the symbology being read.

Fixed-beam readers depend on external motion to read the symbol. This can be provided by an operator moving the reader across the symbol or by providing movement to the symbol in front of the reader. A low-cost popular reading device is the handheld contact scanner. It requires an operator to move the reader smoothly over the symbol.

Moving-beam readers use a mirrored moving surface to provide the illumination. The light source appears as a continuous line of light. The most common moving-beam readers in use are generally referred to as *laser scanners*.

Imaging devices are also used to read bar codes. They operate similarly to a camera. The reflected image of the bar code is projected onto photodiodes composed of many photodetectors. The photodetectors are sampled by a microprocessor and produce a video signal that is then decoded.

The choice of a reading device is dictated by many parameters linked to the application and to economic criteria.

BIBLIOGRAPHY

1. GS1 General Specifications, available from GS1, avenue Louise 326, B-1050 Brussels, Belgium.
2. C. K. Harmon, *Lines of Communication, Bar Code and Data Collection Technology for the 90s*, Helmers Publishing, Dublin, NH, 1994.
3. R. C. Palmer, *The Bar Code Book, Reading, Printing and Specification of Bar Code Symbols*, Helmers Publishing, Dublin, NH, 1991.
4. W. H. Erdei, *Bar Codes, Design, Printing & Quality Control*, McGraw-Hill, Interamericana de Mexico, 1993.

COEXTRUSION FOR SEMIRIGID PACKAGING

This article pertains to a flat, semirigid coextruded sheet, which is a minimum of 0.010 in. (0.25 mm) thick (see Coextrusion machinery, flat). These coextruded sheet structures are thermoformed to produce high-barrier plastic packages (see Barrier polymers; Thermoforming). A similar concept is used to produce high-barrier plastic bottles, except the bottles are formed from coextruded multilayer tubes instead of a flat sheet (see Blow molding).

The production of coextrusions for semirigid packaging was made possible by technology developed in the late 1960s and early 1970s (1, 2). Utilization of this technology was initially limited to "simple" structures, such as two-layer systems (a general-purpose polystyrene cap layer on a high-impact polystyrene base layer) for drink cups. Commercialization of high-barrier coextrusions occurred in the 1970s in Europe and Japan. Large-scale commercial barrier coextrusion applications did not surface in the United States until the 1980s. For the purposes of this discussion, barrier materials are defined as those that exhibit an oxygen transmission rate of less than $0.2\,\mathrm{cm}^3 \cdot \mathrm{mil}/(100\,\mathrm{in}^2 \cdot \mathrm{day} \cdot \mathrm{atm})$ $[0.777\,\mathrm{c}^3 \cdot \mu\mathrm{m}/(\mathrm{m}^2 \cdot \mathrm{d} \cdot \mathrm{kPa})]$ (see Barrier polymers). Other techniques that can be used to produce multilayer barrier structures are coating and lamination (see Coating equipment; Laminating). Some advantages coextrusion offers versus these other two methods are thicker barrier layer capability, single-pass production, barrier layer sandwiched between cap layers, and generally lower cost. The potential markets for packages formed from these high-barrier coextrusions include both low- and high-acid food products sterilized by aseptic, hot-fill, or retort methods. These markets obviously represent a significant opportunity for barrier coextrusions.

BARRIER MATERIALS

On the basis of the barrier definition above, only two commercially available thermoplastic resins can be considered as barrier resin candidates for these extrusions: ethylene–vinyl alcohol (EVOH) (see Ethylene–vinyl alcohol) and poly(vinylidene chloride) (PVDC) (see Vinylidene chloride copolymers). The barrier properties of specific grades of these two materials are listed in Table 1. The resins identified in the table are currently the highest barrier, commercially available, coextrudable resins of their respective polymer classes. Other formulations of both resin types are available offering certain property and processing improvements at the sacrifice of barrier properties.

The most significant technical issue concerning the use of EVOH as a barrier material is its moisture sensitivity. The material is hygroscopic, and its barrier properties are reduced as it absorbs moisture. The importance of this property to the food packager is dependent on the sterilization process, food type packaged, and the package storage conditions. The most severe conditions are encountered during retort processing (see Canning, food). Special consideration to coextrusion structure design and postretorting conditions may be required to achieve the desired oxygen barrier for packages produced from EVOH coextrusions (3).

PVDC is not moisture sensitive and does not exhibit the deterioration of barrier properties shown by EVOH. The challenges associated with using heat-sensitive PVDC are faced by the coextruded sheet producer. Equipment and process design are critical to the production of coextrusions containing PVDC. Concern relating to the reuse of scrap generated in the production of coextrusions based on

Table 1. Barrier Materials

Resin	O_2 Transmission Rate[a]	Water-vapor[b] Transmission Rate	Mid-1985 Price, $/lb ($kg)
EVOH (Eval F, Kuraray)	0.035 [0.136]	3.8 [1.50]	2.41 [5.31]
PVDC (Saran 5253, Dow Chemical)	0.15 [0.583]	0.10 [0.04]	1.02 [2.25]

[a] $cm^3 \cdot mil/(100\,in.^2 \cdot d \cdot atm)$ $[cm^3 \cdot \mu m/(m^2 \cdot d \cdot kPa)]$ at 73°F (23°C), 75% rh.

[b] $g \cdot mil/(100\,in.^2 \cdot d)$ $[g \cdot mm/(m^2 \cdot d)]$ at 100°F (38°C), 90% rh.

PVDC is an economic issue. Development of new material forms and recycle-containing structures is underway with commercialization targeted for 1985 (4). In the meantime, resin manufacturers are working on the development of other types of barrier materials for coextrusion applications (5).

STRUCTURAL MATERIALS

The materials generally used to support the barrier resins in coextrusions are listed in Table 2. The maximum process temperature listed is the highest sterilization temperature that packages based on these resins should experience. Polystyrene, polypropylene, and the polyethylenes are the predominant structural materials used in coextrusions for semirigid packaging applications. Structural resin selection is dependent on use requirements, coextrusion processability, and container-forming considerations.

Polystyrene (see Polystyrene) exhibits excellent coextrudability and thermoformability. It can be used in applications that require low-temperature processing and in some hot-fill applications. Polypropylene (see Polypropylene) is also excellent from a coextrusion-processing standpoint, but it requires special forming considerations. Deep-draw containers from polypropylene-based sheet are most commonly formed using solid-phase forming techniques. Polypropylene can be retorted, but some grades exhibit poor low-temperature impact characteristics, which limit their use in applications that require resistance to refrigerated or freezing temperatures.

High-density polyethylene (see Polyethylene, high-density) offers a significant improvement in low-temperature properties compared with polypropylene, but its suitability in applications that require retort processing is marginal. Low-density polyethylene would be incorporated in coextrusions that require good heat sealability (see Sealing, heat) for applications involving low-temperature-fill conditions.

Although coextrusions based on crystallizable polyester (see Polyesters, thermoplastic) and polycarbonate (see Polycarbonate) are not commercially available at this time, these materials are included as structural materials because of their future potential in retort applications. The success of these relatively expensive materials will be dependent on the cost and performance achieved. Considerable developments of coextrusion and forming techniques need to be completed prior to commercialization of coextrusions based on polyester and/or polycarbonate.

APPLICATIONS

Three representative commercially coextruded structures are shown in Table 3. The transition layers in these structures are materials used to ensure the integrity of the coextrusion. The technology of transition layers is complex and maintained as proprietary by coextrusion manufacturers. The first structure, which uses polystyrene as both cap layers, finds use in form/fill/seal applications because of the particularly good thermoformability of polystyrene (6) (see Thermoform/fill/seal). The second structure has one polystyrene cap layer to maintain thermoformability and one polyolefin cap layer. The polyolefin layer, in this case, would be the food-contact layer. This structure would comply with the current Food and Drug Administration (FDA) regulations for aseptic H_2O_2 package sterilization (see Aseptic packaging). The resins that comply with current FDA regulations for H_2O_2 sterilization are polyethylenes, polypropylenes, polyesters, ionomers (see Inonomers), and ethylene vinyl acetates (EVA). Petitions have been submitted for FDA clearance of polystyrene and ethyl methyl acrylate (EMA) as food-contact layers as well. Containers formed from this structure, with polypropylene as the food-contact surface, can also be hot-filled (7).

The last structure shown in Table 3 has the most potential of those listed, because it can be used in applications including retort processing. The primary market target for coextrusions with polypropylene as the cap layers is processed foods currently in metal cans (8, 9).

In addition to the food-packaging markets, barrier coextrusions can be used in the medical (see Healthcare

Table 2. Structural Materials

Resin	Maximum Process Temperature, °F (°C)	Mid-1985 Price $/lb ($kg)
Polystyrene	195 (90.6)	0.49–0.51 (1.08–1.12)
Polypropylene	260 (127)	0.43–0.47 (0.95–1.04)
High-density polyethylene	230 (110)	0.44–0.50 (0.97–1.10)
Low-density polyethylene	170 (77)	0.40–0.44 (0.88–0.97)
Polyester, thermoplastic (heat-set)	>260 (>127)	0.63–0.67 (1.39–1.48)
Polycarbonate	>260 (>127)	1.69–1.81 (3.73–3.99)

Table 3. Commercial Coextrusions

Structure	Application
Polystyrene Transition Barrier Transition Polystyrene	Form/fill/seal Preformed containers Hot fill
Polystyrene Transition Barrier Transition Polyolefin	Form/fill/seal Preformed containers H_2O_2 aseptic Hot fill
Polypropylene Transition Barrier Transition Polypropylene	Preformed containers H_2O_2 aseptic Hot fill Retort

packaging), pharmaceutical (see Pharmaceutical packaging), and industrial packaging markets where barriers to oxygen, moisture, and hydrocarbons are required.

ECONOMICS

Simply using resin prices to calculate a material cost for a coextruded sheet structure can be unreliable in determining the economics of barrier plastic package. Using material prices only to compare the economics of several coextruded sheet structures on the basis of different resins can result in erroneous conclusions. Items such as required equipment costs, coextrusion output rates, package-forming method and rates, amount of scrap generated, amount of scrap reutilized, container design, and container performance are some of the cost considerations that can be dissimilar for different coextruded sheet structures. Economic comparison of various coextruded barrier packages with alternative packaging materials should be based on a total packaging systems analysis. The current commercial applications and market tests underway show that packages from coextruded sheet offer economic and/or performance advantages versus other packaging materials.

BIBLIOGRAPHY

"Coextrusions for Semirigid Packaging" in R. J. Dembrowski, ed. *The Wiley Encyclopedia of Packaging*, 1st edition, Ball Corporation, pp. 201–204.

1. U.S. Patent 3,479,425 (Nov. 18, 1969), L. E. Lefeure and P. Braidt (to Dow Chemical Company).
2. U.S. Patent 3,557,265 (Jan. 19, 1971), D. Chisholm and W. J. Schrenk (to Dow Chemical Company).
3. K. Ikari, "Oxygen Barrier Properties and Applications of Kuraray EVAL Resins," presented at Coex 1982, sponsored by Schotland Business Research, Inc., Princeton, NJ.
4. W. J. Schrenk and S. A. Marcus, "New Developments in Coextruded High Barrier Plastic Food Packaging," presented at SPE–RETEC, 1984, Cleveland, OH.
5. R. McFall, "New High Barrier Polyester Resins for Coextrusion Applications," presented at Coex 1984, sponsored by Schotland Business Research, Inc., Princeton, NJ.
6. "Cheese Invades Europe," *Packag. Dig.* **45** (1981).
7. "Industry/Newsfocus," *Plast. Technol.* p. 114 (1984).
8. "Campbell's Plans for Plastics: 'mm, mm, good'," *Plast. World* **6** (1984).
9. S. A. Marcus, *Food Drug Packag.* **22** (1982).

General References

S. E. Farnham, *A Guide to Thermoformed Plastic Packaging*, Cahners Publishing Company, Boston, MA, 1972.

S. Sacharow and R. C. Griffin, *Basic Guide to Plastics in Packaging*, Cahners Publishing Company, Boston, MA, 1973.

J. A. Cairns, C. R. Oswin, and F. A. Paine, *Packaging for Climatic Protection*, Newnes–Butterworths, London, UK, 1974.

Proceedings of Coex '81, '82, '83, and '84, Schotland Business Research, Inc., Princeton, NJ.

R. J. Kelsey, *Packaging in Today's Society*, St. Regis Paper Company, New York, 1978.

Proceedings of the Seventh International Conference on Oriented Plastic Containers, Ryder Associates, Inc., Whippany, NJ, 1983.

L. B. Ryder, *Plast. Eng.*, 1983.

S. Hirata and N. Hisazumi, *Packag. Japan* **25** (1984).

A. Brockschmidt, *Plast. Technol.* **67** (1984).

COEXTRUSION MACHINERY, FLAT

Multilayer coextruded flat film and sheets are produced on single-slot T dies. The overall process is similar to that used for single-layer products of the same dimensions (see Extrusion). The specialized design considerations for coextrusion are discussed below.

MACHINERY

Extruders. Each product component requires a separate extruder. Several layers may be produced by the same extruder using suitable feed block or die connections. Systems range from two extruders for a simple BA or ABA structure to five or six extruders for high barrier sheet (see Coextrusions for semi-rigid packaging).

Since all of these extruders feed one die, the area behind the die can become a crowded place. Extruders are therefore built as narrow as possible. Vertical gearboxes permit tuck-under motors that reduce space requirements and provide good service access to the motor and other components.

Smaller extruders can be mounted overhead at various angles. Larger machines present an access and height problem when located overhead. The most effective and

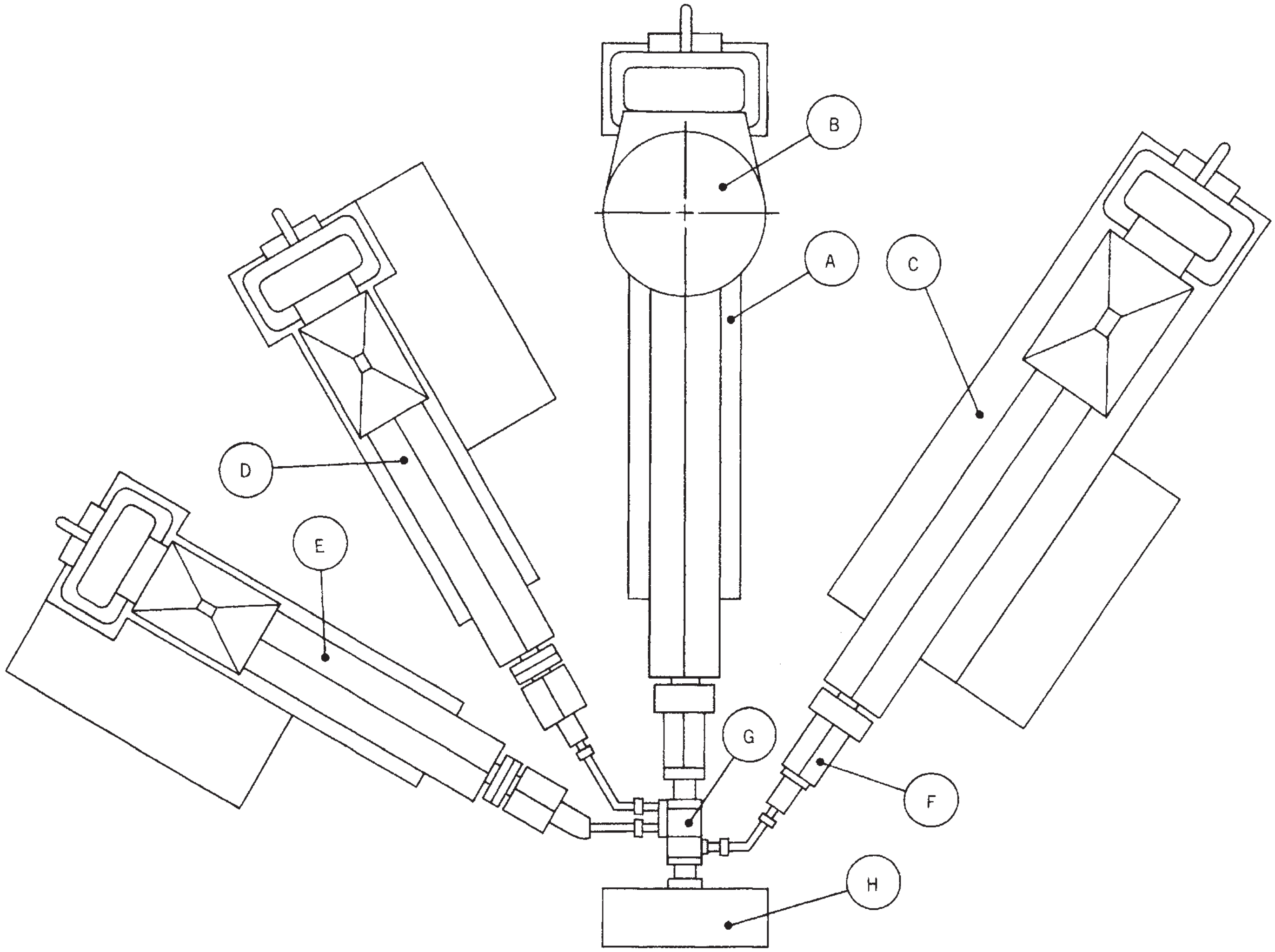

Figure 1. A typical layout for coextrusion (1): A, recycled layer extruder; B, crammer feeder; C, virgin layer extruder; D, glue layer extruder; E, barrier layer extruder; F, static mixer; G, feed block; H, sheet die.

accessible arrangement is usually a fan layout of larger extruders with some small machines overhead (Figure 1).

Thermal expansion requires that all but one and sometimes all machines to be mounted on wheels with expansion capability both axially and laterally. Height adjustments must also be provided to permit accurate alignment to the interconnecting piping.

PVDC requires special corrosion-resistant extruder construction (see Vinylidene chloride copolymers). High-nickel cylinder lining and Z nickel screws are essential to avoid corrosion and polymer degradation. The optimum ratio is 24 *L*/*D* (length/diameter) for this heat-sensitive material. Everything associated with the PVDC extruder is critically streamlined, and all flow surfaces normally contacting or possibly contacting PVDC must be nickel. No screens or breaker plates are used. A long conical tip with matching adapter assures streamlined flow. A PVDC extruder can run over barrier materials equally well with different suitable screw designs.

All other extruders can be of conventional materials of construction. A ratio of 30 *L*/*D* is desirable for best performance in most cases. These can also be vented for devolatizing when necessary to remove entrapped air or moisture. Venting cannot be used with high backpressures or low screw speeds. Screen changers are used on most extruders to avoid laborious disassembly when screens are plugged. Good screening is essential in barrier sheet extrusion to avoid plugging critical flow passages and pinholes in some layers. Remote-control hopper shutoffs help quick startup and shutdown.

Ethylene–vinyl alcohol (EVOH) requires predrying. Otherwise, it degrades during extrusion with a reduction of melt viscosity. An increase in melt index will disturb layer distribution (see Ethylene–vinyl alcohol).

Scrap or recycled material is often used as a 100% constituent of one layer. This may require special feed handling such as a grooved feed section or the addition of a crammer feeder. If the scrap contains PVDC, the extruder must also include the appropriate materials of construction and streamlined design.

Good mixing with special screws is necessary to homogenize the components.

Melt quality and uniformity are absolutely critical for good multilayer coextrusion. Small variations that are invisible in a single-layer sheet can cause severe disturbances in coextrusion resulting from layer interactions. It therefore cannot be assumed that an extruder that works well in single-layer service is suitable for critical coextrusion work.

Cylinder Cooling System. Melt viscosity is the major factor controlling layer distribution. The ability to control melt temperature level upward and downward to some extent is essential to permit layer distribution control. This requires conservative speed extruder operation. Complex sheet extruders should therefore always be larger for a given capacity than those used for single-layer extrusion. Closed-loop liquid cooling rather than air cooling is desirable on larger extruders to achieve desired melt temperatures.

PVDC extruders of any size should be liquid-cooled for fast cooling in case of problems. Automatic fail-safe liquid cooling is often used to cool the extruder in case of a power failure.

Layer uniformity and stability can be improved by two devices that are relatively new to extrusion.

Gear Pump. Gear pumps provide positive output delivery systems for extruders. They permit accurate control of the content of each layer and ensure that all layers are present in the preselected proportions. The pump is run at an accurately controlled speed. The extruder speed is automatically regulated to maintain a constant feed pressure into the gear pump. All variations in extruder output are therefore automatically compensated. The regrind extruder, which is subject to the largest variability, should be fitted with a gear pump.

Static Mixer. Static mixers play an important part in stabilizing melt uniformity. This is particularly important with viscous polymers such as PP and HDPE, which have long stress–relaxation times.

The mixer also provides an extended residence time at low shear rate for stress relaxation after the high shear in the extruder and gear pump. The static mixer is best installed as the last element prior to the feed block.

Piping. The extruder output is conveyed to the feed block or die through a feed pipe. There are a number of important considerations regarding this technical plumbing (Figure 2):

It should be as short as possible with a minimum of bends. All bends should be smooth to avoid material hangup.

The internal diameter should be large enough to avoid large pressure drops, which cause a rise in melt temperature, but not so large as to create stagnation.

The wall thickness should not only take operating pressure into consideration but also act as a good heat sink and distributor. Polymer-filled pipes can be subjected to enormous thermal expansion pressures during heating.

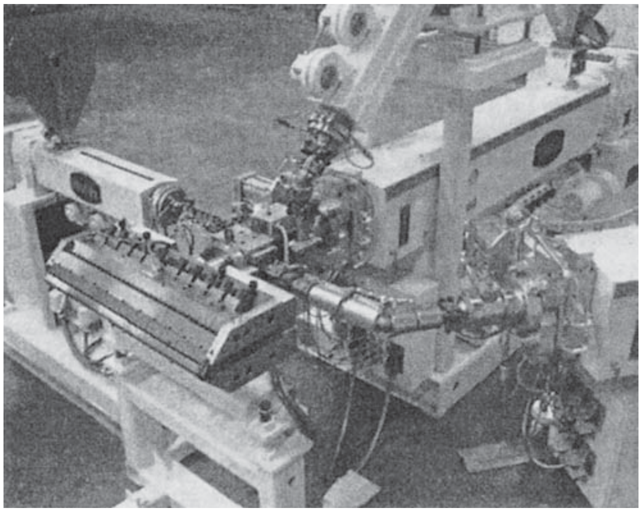

Figure 2. Feed block and piping.

Heating must be very uniform to avoid hot and cold spots.

Low-voltage density heaters with almost complete pipe coverage are desirable. Heater tapes are dangerous owing to the possibility of poor uniformity of heat distribution.

Control thermocouples must be carefully located to sense the actual pipe temperature.

The construction material must suit the polymer to be conveyed.

Pipes should be easily and quickly disconnected for cleaning and access. Longer pipes should be sectionally assembled to help with this. C clamps are ideal for coupling feed pipes. These also permit rotational motion and compensation for minor misalignment without leakage.

METHODS

Two different methods are used to coextrude flat film and sheet: multimanifold die and feed-block coextrusion.

Multimanifold Die. The molten polymer streams are fed to separate full-width manifolds in a T die. They are merged prior to exiting from a common slot. These dies are complex and expensive but provide for accurate adjustment of individual layer profiles. The number of layers is limited by the die design, and five appears to be the practical upper limit. The layer capability can be increased by using a feed block on one of the manifolds. Layer adjustment is tedious owing to the great number of adjustment points, and these dies are usually limited in use to single-purpose applications.

Feed-block Coextrusion. The product is coextruded on a conventional single manifold T die preceded by a feed block in which the layers are formed. This is the most frequently used process for complex structures. It has been the object of many patents and much litigation.

Feed blocks combine the polymer layers in the structure arrangement desired for the finished sheet in a narrow width and a relatively thick cross section. This makes the layer assembly fairly easy. Thereafter, laminar and nonturbulent flow in the die is necessary to maintain the desired structure.

Viscosity matching of components is essential; that is, the viscosities of the separate components must be alike. Higher viscosity material displaces lower viscosity material at the edges of the die. Even materials having apparently identical viscosity may not flow evenly because of interfacial slip or die surface drag. Despite this, viscosity matching works very well for many complex structures. Viscosity differences can often be compensated by temperature adjustments. Feed blocks also incorporate mechanical compensating devices. Consequently, layer distribution uniformity in the 1% range is attainable across the sheet.

Three major feedblock systems are in use commerically. Each has its advantages and disadvantages. All use the principle of nonturbulent laminar flow through the die to achieve good results. The difference between the systems is in how the layers are assembled before the die.

The *Dow system* (Dow Chemical Co.) uses a square die entrance with the height of the die manifold. The layers are assembled in one plane through a series of streamlined flow channels. Details are covered by secrecy agreements and therefore cannot be disclosed. This coextrusion technology has been developed around Dow's saran PVDC, and it excels in this field. The Dow feed block incorporates several flow adjustments. These feed blocks are available from Dow machinery licensees who include most sheet extrusion system builders (1).

The *Welex system* uses a circular flow passage, which is the usual die entrance configuration for single-layer extrusion (see Figure 3). The layers are assembled sequentially in and around the cylindrical flow. The system is modular so that more layers can be added to a given feed block at any time. Inner- and outer-layer feed components are fixed but are removable for correction or adjustment (2).

The *Cloeren system* uses a rectangular die entrance with the height of the die manifold and a width of about 4 in. (100 mm) (see Figure 4). The block is essentially a miniature multilayer sheet die with movable separating vanes. These permit adjustment of the relative flow gaps during operation. The number of layers is predetermined by the number of flow channels. The feed to each channel can be selected by interchangeable inlet plugs. They are available from Cloeren Company or through builders of sheet extrusion systems. Cloeren also builds multimanifold dies similar in structure to the feed block. These can be fed by a feed block into the central manifold. Although this may seem complex and expensive, it offers a solution to structures with widely differing melt viscosities (3).

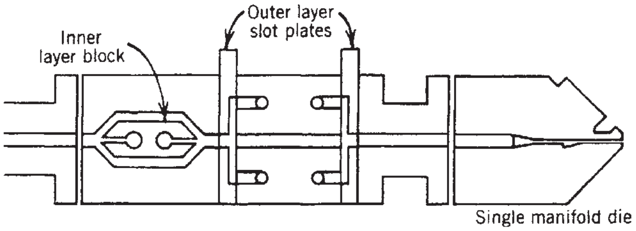

Figure 3. Welex feed block (2).

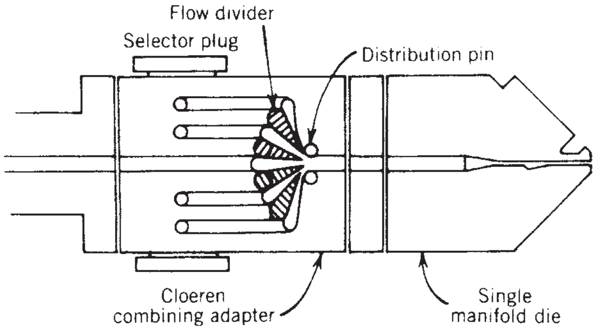

Figure 4. Cloeren feed block (3).

ENCAPSULATION AND LATERAL ADJUSTMENT

It is generally desirable to limit the width of the barrier layer to less than the full sheet width. This is essential with PVDC to avoid contact with the die surfaces and much of the feed block. This not only permits the use of normal materials of construction but also totally eliminates degradation of PVDC by stagnation on a metal surface. This problem is solved by encapsulating or totally surrounding the barrier layer with other polymers so that it is floated through the die.

The accurately adjustable width of the barrier layer permits major savings in barrier-material cost and reduces recycling problems. Preferably, this layer should extend only to the tooling width in the thermoformer. Edge trim from the extrusion operation and from the thermoforming should be single layer.

All three feed-block systems incorporate adjustments for this purpose. This is usually achieved by a flow mechanism in the feed block that adjusts the flow width of the barrier layer. Other layers such as the glue layers can be similarly controlled.

OTHER EQUIPMENT

Controls. The most important aspect of multilayer sheet and film extrusion is control. A system includes a tremendous number of variables and adjustments that affect the layer thickness and distribution. Since 100% inspection is impossible, reliance is placed on the consistency and stability of operation.

A microprocessor control system is ideal to help maintain good control and to alarm process deviations. It can also be easily programmed for rapid product changes and for critical startup and shutdown procedures.

Gauging. Single-layer gauging and control have reached a high state of perfection. Tolerances better than 1% are readily achieved. Measurement of individual layers is possible in certain cases. In thin transparent structures, selective infrared absorption bands permit the separate measurement of widely differing polymers. This method does not work on thick and opaque products, and it does not give the layer location within a structure. Continuous nondestructive-layer measurement remains under intensive development.

Downstream Equipment. Multilayer sheet and film use conventional sheet and film takeoff equipment. Nickel-plated rolls are preferably used when processing product containing PVDC to avoid damage to chrome plating in the event of a breakdown. Multiple-edge trimming is sometimes used to separate single-layer from multiple-layer material to reduce scrap recycling problems.

BIBLIOGRAPHY

"Coextrusion Machinery, Flat" in F. R. Nissel, ed., *The Wiley Encyclopedia of Packaging Technology* 1st ed., by Welex, Inc., pp. 193–196.

1. U.S. Pat. 3,557,265 (Jan. 19, 1971), D. F. Chisholm et al. and U.S. Pat. 3,479,425 (Nov. 18, 1969), L. E. Lefevre et al. (to Dow Chemical USA).
2. U.S. Pat. 3,833,704 (Sept. 3, 1974), U.S. Pat. 3,918,865 (Nov. 11, 1975), and U.S. Pat. 3,959,431, May 25, 1976, F. R. Nissel (to Welex Incorporated).
3. U.S. Pat. 4,152,387 (May 1, 1979) and U.S. Pat. 4,197,069, (Apr. 8, 1980), P. Cloeren.

General References

L. B. Ryder, "SPPF Multilayer High Barrier Containers," *Proceedings of the Eighth International Conference on Oriented Plastic Containers*, Cherry Hill, NJ, 1984, pp. 247–281.

F. Nissel, "High Tech Extrusion Equipment for High Barrier Sheeting," *Proceedings of the Second International Ryder Conference on Packaging Innovations*, Atlanta, GA, Dec. 3–5, 1984, pp. 249–279.

J. A. Wachtel, B. C. Tsai, and C. J. Farrell, "Retorted EVOH Multilayer Cans with Excellent Barrier Properties," *Proceedings of the Second International Ryder Conference on Packaging Innovations*, Atlanta, GA, Dec. 3–5, 1984, pp. 5–33.

COEXTRUSION MACHINERY, TUBULAR

Tubular coextrusion for packaging applications is generally referred to as *blown-film coextrusion*, which distinguishes it from other similar tubular processes that produce products such as pipe and heavy-wall tubing. Blown-film coextrusion therefore refers to the process of forcing more than one molten polymer stream through a multimanifold annular die to yield a film consisting of two or more concentric plastic layers (see Extrusion; Films, plastic). The laminar characteristic of polymer flow permits the maintenance of discrete layer integrity such that each polymer in the film structure can fulfill a specific and individual purpose (see Coextrusions for flexible packaging).

Coextruded film structures are designed to incorporate one or more of the following objectives: heat sealability; barrier against gas or moisture transmission; high strength (ie, tensile, impact, and tear); color differential; surface frictional properties; adhesive between layers; stiffness (modulus of elasticity); optical quality (clarity and gloss); and reclaim carrier. Combinations of these properties can be achieved by the arrangement of polymer layers in which each polymer exhibits the specific desired property.

PROCESS EQUIPMENT

A tubular coextrusion process fundamentally consists of the extruders, die, air ring, collapsing mechanism, haul-off, and winder. These elements are similar to those of single-layer film extrusion except for the die, which must contain more than one flow manifold, i.e., layer channel, for extrusion (see Figure 1).

The added complexity of multilayer die components, coupled with the inherently superior quality requirements for coextruded films, make the die the highest design priority of the extrusion system. The most critical die-design considerations for multilayer applications are (a) structural integrity, i.e., the hardware's ability to withstand typical internal pressures of 3000–6000 psi (21–41 MPa); (b) dimensional integrity, the interlocking of and machining precision related to mating parts defining flow-stream concentricity; (c) polymer-flow distributive quality, in order to use a range of diverse materials; and (d) reduction of design-flow restriction, permitting extrusion of high-viscosity polymers.

Closely related to the die issue is the frequent need to rotate (or, preferably, oscillate) the die assembly for the

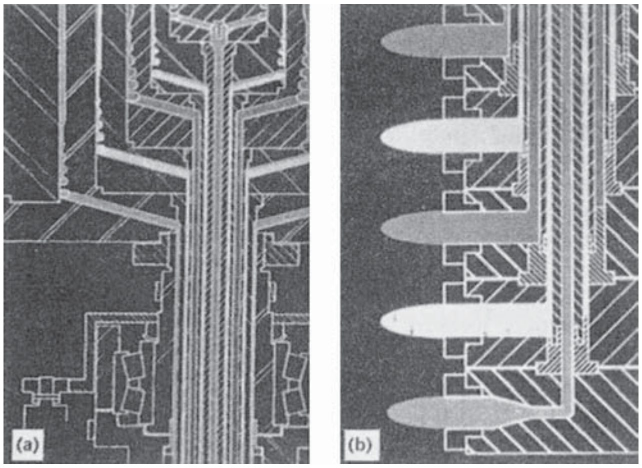

Figure 1. Typical rotating tubular five-layer configuration: (**a**) die structure; (**b**) extruder inlet arrangement.

purpose of randomizing film-thickness variations across the entire windup width. In the seal section, where there is an interface between fixed and oscillating members, polymer pressure is large, i.e., typically 5000 psi (34.5 MPa). Because the seal must act against this force, the seal design must be well qualified, and thrust-bearing, and the seal-maintenance costs are likely to be high.

Alternative methods sometimes used for thickness randomizations are oscillating haul-off assemblies, rotating winders, or rotating extrusion systems. Each method poses some significant technical difficulty worthy of extensive selection and design consideration.

SPECIALIZED PROCESS DESIGN

Because coextruded films often employ polymers uncommon to those used in single-layer extrusion, some unusual process design criteria, discussed below, are added for multilayer systems.

Degradable Polymers. Most of the gas-barrier resins are vulnerable to temperature degradation. This imposes a need for specialized die streamlining and extruder-feedscrew design. The feedscrew configuration is critical in minimizing melt temperature and in ensuring uniformity of temperature and viscosity across the melt-flow stream.

High Modulus of Elasticity (Film). Many barrier and high-strength polymers exhibit modulus, i.e., stiffness, characteristics that cause unique web-handling and winding difficulties. The elimination of web wrinkles and flatness distortions becomes a critical design objective related especially to collapsing geometry, idler and nip-roll size, as well as line-drive quality. The handling of stiff webs usually entails relatively high equipment costs because higher tension levels are required, along with more precise tension control. Use of highly accurate regenerative de drive equipment is usually advisable for coextruded films. The high-modulus webs also dictate greater hardware rigidity and tighter roll-alignment tolerances.

Four-side Treatment Capability. Because of layer-thickness structure considerations in coextrusion, the surface to be printed may be extruded as the inner layer of the bubble. This shifts corona-treatment requirements (for subsequent ink adhesion) from the outer to the inner layer. Two treater stations are sometimes installed on coextrusion systems; one is for the treatment of the inner layer downstream of the web separation.

High Film Surface Coefficient of Friction (COF). For many high-speed sealing applications, as well as such products as stretch film, multilayer film surfaces are abnormally tacky. One of the principal advantages of the coextrusion process is its ability to create such properties with relatively low additive content concentrated in individual layers. However, very high resultant COF values can cause unusual web-handling difficulty, especially in relation to the bubble-collapsing function. This aggravated geometric problem, i.e., flattening a cylinder (bubble) into a single plane, can be alleviated with the use of very low friction collapsing means. In contrast to the more conventional wood-slat configuration, low friction systems employ rollers on ball bearings or air-cushion surfaces to minimize film-surfacing drag forces during collapsing.

QUALITY-CONTROL REQUIREMENTS

Multilayer films, because of their enhanced physical properties, frequently command premium selling prices; however, these films also necessitate several added cost factors and engineering complications related to process design. The cost differential is due to the film's added value, exemplified by more stringent thickness-uniformity and winding-quality standards. These are described below.

Temperature Control. In addition to plant-space problems associated with multiple extruders, tighter film-quality specifications dictate improved temperature control in a smaller control console. Most recent coextrusion-system plans employ microprocessors to save space and take advantage of digital-control logic. Achieving process-temperature stability is often essential for coextruded films, in contrast to the fluctuations and errors normally tolerated in single-layer processes.

In-line Blending. Because of the many types of raw material used in coextrusion, the purchase and storage of specialized-resin blends is impractical. There is an advantage to in-line blending of additives, and investment plans for a complex coextrusion system generally include a high priority for blending equipment. This is also logical in view of the relatively high per pound (kg) cost of the special resins and additives involved and the particularly high quality demanded of multilayer products.

Layer-thickness Control. Individual layer thickness must be carefully monitored either by tedious off-line measurement or in-line by gravimetric (weigh-feeding) extruder loading. A difficult technical objective unique to coextrusion, layer-thickness control is a key process-control priority that provides the opportunity to achieve cost savings or the liability to waste raw material and produce defective film. Although layer-thickness measurement can be achieved with spectrophotometers, weigh feeding seems the most practical and reliable means of controlling layer percentages.

Roll-winding Quality. Roll-conformation requirements associated with multilayer films are usually severe, representing a more costly and complicated winder configuration. In-line slitting is a common cost-saving requirement, encouraging the use of advanced web-handling technology in the categories of alignment precision, web spreading concepts, as well as tension and speed control (see Slitting and rewinding machinery). Typical high multilayer line speeds, often 200–500 ft/min (61–152 m/min), dictate the incorporation of automatic cut and transfer mechanisms. Manual roll transfers are not practical at these speeds and with multiple slits. Additionally, the broad range of film elasticity, stiffness, thickness, and surface tack encountered in coextruded applications demands extraordinary winder versatility and performance quality.

ECONOMIC FACTORS

Most blown-film coextrusion systems operate in an output range of 200–1000 lb/h (91–454 kg/h). A typical average rate is 300 lb/h (136 kg/h). Although some two-, four-, and five-layer systems exist, a common installation uses three extruders, even when producing two-layer products. Usual extruder combinations include 2.5-in. (6.4-cm) diameter and 3.5-in. (8.9-cm) sizes, although many 4.5-in. (11.4-cm) extruders are also used. Some lines operate at 2000 lb/h (907 kg/h) with 6-in. (15.2-cm) extruders.

In the United States, the coextrusion industry consists of a large population of in-line multilayer bag operations in addition to those requiring film winding. Investment levels and process-quality requirements are usually not as high for the bag operations. A three-layer, 300-lb/h (136-kg/h) in-line bag extrusion system, for example, costs approximately $300,000; a film-winding version with the same output specification would probably cost at least $400,000.

Operating costs for coextrusion systems are similar to those of single-layer extrusion except for the higher initial investment, i.e., typically 50% higher for coextrusion of the same output category. Energy costs are equivalent ($0.03–0.05/lb or $0.07–0.11/kg) to those of single-layer extrusion, and man-power requirements vary only slightly. Labor costs per unit weight are often higher for coextrusion, not as a function of manpower requirements but because more elaborate processes require greater skills.

A frequent important economic incentive for the manufacture of coextruded films is that premium film pricing reduces the cost percentage of raw materials, e.g., resin. Therefore, multilayer products are generally reputed to offer higher profit margins than their single-layer counterparts.

Scrap reclaim can often be an economic disadvantage with coextrusion. It may be limited or prohibited by incompatibilities between the polymers of corresponding layers, which is a complication particularly prevalent among specialty food-packaging films that contain gas-barrier resins. In these cases, reclaimed scrap may only be eligible for insertion into a thin adhesive layer, thus severely limiting reclaim percentages. Conversely, some coextruded films are designed specifically to exploit high scrap-input potential. In these cases, high loadings of scrap or reprocessed resin are sandwiched between skin layers of virgin polymer.

BIBLIOGRAPHY

"Coextrusion Machinery, Tubular" in W. D. Wright, ed., *The Wiley Encyclopedia of Packaging Technology*, 1st ed., by Western Polymer Technology, Inc., pp. 197–199.

General References

W. J. Shrenk and R. C. Finch, "Coextrusion for Barrier Packaging" and R. C. Finch, "Coextrusion Economics," *Papers Presented at the SPE Regional Technical Conference (RETEC)*, Chicago, IL, June 1981, The Society of Plastics Engineers, Inc., Brookfield Center, CT, pp. 205–224 and pp. 103–128.

R. Hessenbruch, "Recent Developments in Coextruded Blown and Cast Film Manufacture," *Papers Presented at COEX '83*, Düsseldorf, FRG, Schotland Business Research, Princeton, NJ, 1982, pp. 255–273.

N. S. Rao, *Designing Machines and Dies for Polymer Processing with Computer Programs*, Macmillan, New York, 1981.

R. L. Crandell, "CXA—Coextrudable Adhesive Resins for Coextruded Film" and G. Burk, "On Line Measurement of Coextruded Coated Products by Infrared Absorption," *Papers Presented at TAPPI Coextrusion Seminar*, TAPPI, Atlanta, 6A, May 1983, pp. 89–90.

Properties of Coextruded Films, TSL 71–3, E. I. duPont de Nemours & Co., Inc., Wilmington, DE.

C. D. Han and R. Shetty, "Studies of Multi-layer Film Coextrusion," *Polym. Eng. Sci*. **16**(10), 697–705 (Oct. 1976).

D. Dumbleton, "Market Potential for Coextrudable Adhesives," *Papers Presented at COEX '82*, Düsseldorf, FRG, 1982, Schotland Business Research, Princeton, NJ, 1982, pp. 55–74.

G. Howes, "Improvements in the Control of Plastics Extruders Facilitated by the Use of Microprocessors, *Papers Presented at the TAPPI Paper Synthetics Conference '81*, TAPPI, Atlanta, 6A, pp. 21–31.

"Coextrusion Coating and Film Fabrication," TAPPI Press Report 112, Atlanta, 6A, 1983.

COEXTRUSIONS FOR FLEXIBLE PACKAGING

ERIC HATFIELD
LARRY HORVATH
James River Corporation,
Milford, Ohio
Updated by Staff

INTRODUCTION

Multilayer coextrusion of thermoplastic film and sheet has developed into an important plastic fabrication process, providing large growth opportunities for the plastic industry. Coextruded multilayer plastics are challenging such traditional materials as metals, glass, paper, and textiles (1). Flexible packaging is the second largest type of packaging in the United States. It represents 18% of the $\$135 \times 10^9$ market (2). The attraction of coextrusion is both economic and technical. It is a single-step process starting with two or more plastic materials that are simultaneously extruded and shaped in a single die to form a multilayer sheet or film. Thus, coextrusion avoids the costs and complexities of conventional multistep lamination and coating processes, where individual plies must be made separately, primed, coated, and laminated. Coextrusion readily allows manufacture of products with layers thinner than can be made and handled as an individual ply. Consequently, only the necessary thickness of a high-performance polymer is used to meet a particular specification of the product. In fact, coextrusion has been used commercially to manufacture unique films consisting of hundreds of layers of individual layer thicknesses less than 100 nm. It is difficult to imagine another practical method of manufacturing these microlayer structures.

Layers may be used to place colors, bury recycle, and screen UV radiation, and provide barrier properties; for example, additives such as antiblock, antislip, and antistatic agents can be placed in specific layer positions. High-melt-strength layers can carry low-melt-strength materials during fabrication.

The largest market for coextruded films and sheets is in packaging applications—for example, two- or three-layer films for trash bags or five- to nine-layer structures for flexible and semirigid packages. As many as five different polymers may be used to obtain heat sealability, barrier, chemical resistance, toughness, formability, and aesthetics. Coextrusion is also suitable for applying thin multilayer films as coatings on substrates. Food packaging is a growing application.

ADVANTAGES OF COEXTRUSIONS OVER BLENDS

The layers of a coextruded film are generally composed of different plastic resins, blends of resins, or plastic additives. The difference between a coextruded film and a resin blend lies in the existence of distinct layers in the coextruded film as opposed to the blend. Figure 1 illustrates the differences.

Some structures would not function as blends, but perform very well as coextrusions. For example, a film requiring aroma barrier and easy sealability would be very difficult to make as a blend. As a coextrusion the product could look something like the structure shown in Figure 2.

If the structure shown in Figure 2 were run as a blend, the EVA would degrade at the temperature required to melt the nylon, and the nylon would lose much of its aroma barrier because it would be contaminated by the EVA.

PRINCIPAL MANUFACTURING PROCESSES

Five principal manufacturing processes utilize coextrusion technology in producing flexible-packaging material: cast-film coextrusion, blown-film coextrusion (tubular), coextrusion coating, coextrusion lamination, and oriented coextruded films.

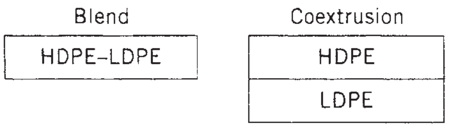

Figure 1. Cross section of film composed of resin blends and coextrusion.

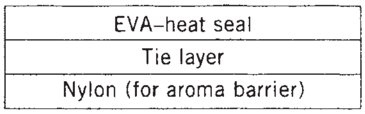

Figure 2. Cross section of functional coextruded film.

The coextrusion processes for cast film, extrusion coating, and laminations are similar in that the coextrusions pass through a flat die. However, there are differences in the remainder of each process. The cast-film process requires extruding the molten extrudate on to a chill roll, quenching it into a multilayer film and eventually winding into a roll.

In extrusion coating, the molten extrudate is extruded onto a substrate such as paper or foil, cooled, and wound into a roll. A coextrusion lamination occurs when (a) the molten polymer is extruded between two substrates, thereby gluing them together, (b) the polymer is quenched, and (c) the lamination is wound into roll form. A typical example of a coextrusion lamination process is illustrated in Figure 3.

Oriented coextruded films can be made by either the cast or the blown process but require additional processing before being wound into a finished roll.

Cast-Film Process

The main focal points of technology in the cast processes are the designs of the dies and melt-flow properties of the resins.

Two types of design are used: a multimanifold die and a single-manifold die with an external combining adapter. A schematic of each die design is shown in Figure 4.

In the single-manifold die, separate resin melt streams are brought together in a common manifold. The resin streams are combined in a combining adapter (or feedblock) prior to the die where distinct layers are maintained. In a multimanifold die, resins streams flow in separate channels and are combined inside the die after attaining full width. The important advantages of the single manifold are capital costs, flexibility of operation, thinner layers, and a larger number of possible layers.

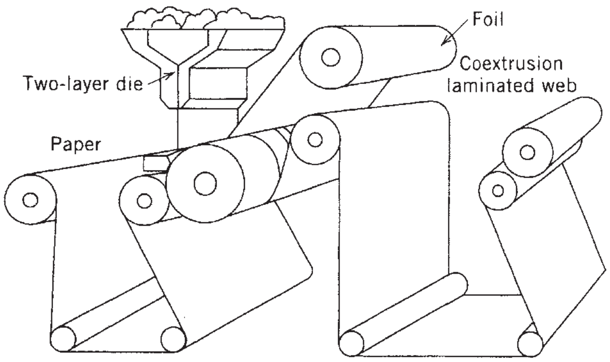

Figure 3. A typical coextrusion lamination process.

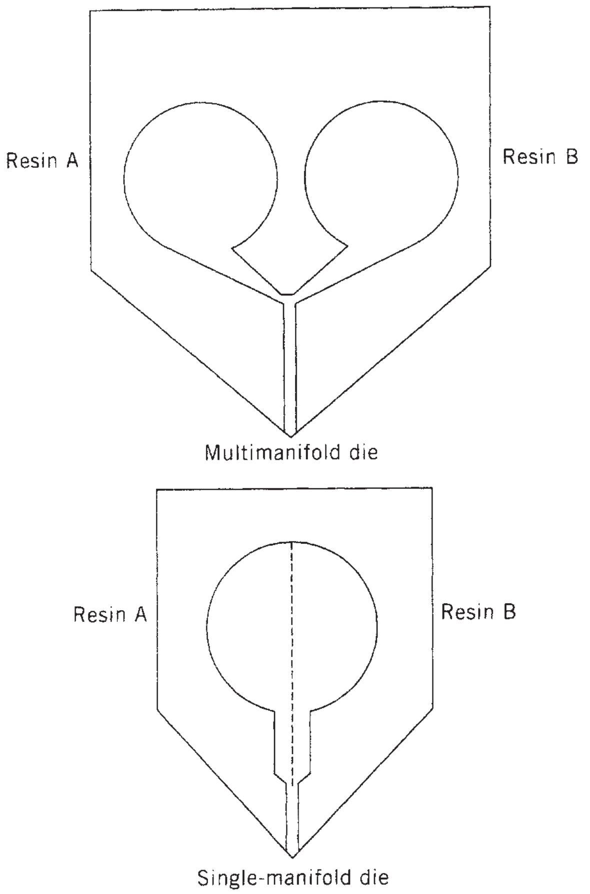

Figure 4. Schematic of a single-manifold die and multimanifold die.

Coextrusions of over 2000 layers have been reported (3). The design of feedblocks and control of laminar flow of the various components are critical to successful operation of this process.

A potential disadvantage of the single-manifold die is the need to carefully select materials with relatively similar meltflow properties. The multimanifold system allows for easier processing of dissimilar materials. In addition to a broader range of melt properties, a greater differential of temperatures between layers is possible. In practice, almost all coextrusion is done with the combining adapter and the single-manifold die.

Blown-Film Process

The blown-film coextrusion process is illustrated in Figure 5. In this process, separate resins are extruded into a circular die. The molten-resin streams are blown into a bubble, cooled by air rings, and collapsed in the primary nip. The tubular film is generally slit for specific packaging applications. The die design for blown film, in addition to being circular, is different from the cast process in that separate melt streams are combined near the die exit or external to the die.

Compared to cast films, blown films generally have more balanced physical strength properties, higher moisture barrier, and greater stiffness. Optical properties such as clarity and gloss, however, are generally inferior to those of the cast process because of the slower rate of crystallization in the blown process. (Blown films are more crystalline than the corresponding cast films.)

Coextrusion Coating and Laminating Processes

Die designs for coextrusion coatings and laminations are similar to those used in the manufacture of cast film. The polymers used are usually lower viscosity and are extruded at higher temperatures, resulting in easier flow properties. Therefore the dies are usually smaller in bulk and rigidity when compared to cast-film dies. The higher temperatures are required to achieve good adhesion to the various substrates. On an extruder with two dies, it is possible to extrusion laminate the paper with aluminum foil and then extrusiom coat the aluminum foil in one pass (4).

Oriented Coextruded Processes

Coextruded films are often oriented to enhance their physical or barrier properties. Orientation of the film is the result of stretching the film after it is quenched. Coextrusions can be oriented in three ways: (1) monodirectional—either MD (machine direction) or TD (transverse direction-cross machine), (2) sequentially MD and TD, or (3) simultaneously MD and TD. The method of orientation chosen is dependent on the materials used and the desired final properties.

PRINCIPAL RAW MATERIALS

The majority of coextruded structures are made up of polyolefins (polyethylene and polypropylene). This class of material is preeminent because of low cost, versatility, and easy processability. LDPE–LLDPE resins (see Polyethylene, Low-Density) are used extensively in coextruded structures for their toughness and sealability. HDPE resins are selected for their moisture barrier and machinability characteristics (see Polyethylene, High-Density). Polypropylene is chosen for its ability through orientation to provide machineable films with high impact and stiffness properties.

Although the polyolefins are the workhorse grades for coextruded packaging, they are almost always combined with other resins to achieve multilayer functionality. Copolymers of ethylene–vinyl acetate (EVA), ethylene–acrylic acid (EAA), and ethylene–methacrylic acid (EMA) are regularly used as skin layers for their low-temperature sealing characteristics. When oxygen, aroma, or flavor protection is necessary, polymers such as poly(vinylidene chloride) (PVDC), nylon, and ethylene–vinyl alcohol (EVOH) for clarity ethylene–vinyl alcohol copolymers are used (see Nylon; Vinylidene Chloride Copolymers). Nylon and EVOH do not readily adhere to polyolefins, so an adhesive or tie layer is necessary to hold the coextruded structure together. Other polymers such as polycarbonate (see Polycarbonate) or polyester (see Polyesters,

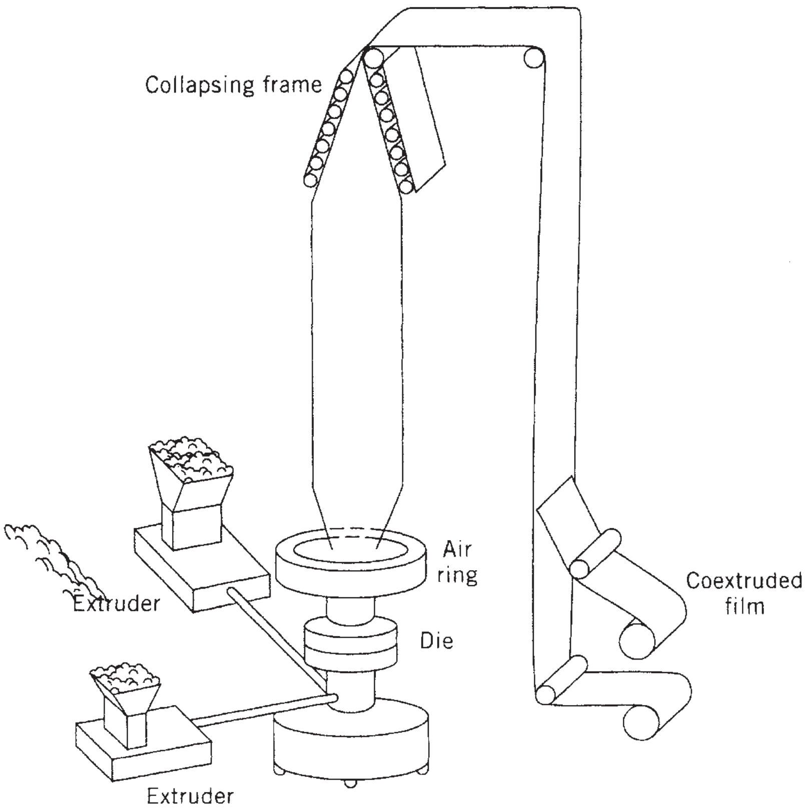

Figure 5. Blown-film coextrusion process.

Thermoplastic) many be used as skin layers to provide unusual thermal integrity for packaging machine performance.

STRUCTURES

Coextruded flexible-packaging applications include coextruded films (see Table 1 for a list of structures), laminations, and coatings. In general, coextruded films are preferred to coextruded laminations and coatings because of their cost-effectiveness in use. Because lamination and coating require an extra value-added stage, they tend to cost more.

Coextruded multilayer structures can be divided into three categories: single-resin, unbalanced, and balanced. Many structures that are based on the performance properties for a single resin are coextruded for performance or cost reasons. Unbalanced structures typically combine a functional layer with a heat-seal resin. Balanced structures generally have the same heat-sealable resin on both sides of the film.

Single-Resin Structures

Single-resin films are coextruded for a variety of reasons. Many commodity film applications may not appear to be multilayer films, yet they actually have three or more distinct layers. Bakery, produce, and trash-bag films, for example, are often three-layer structures. The core material may contain pigment or recycled material, while virgin skin layers control surface quality and machinability. Single-resin coextrusions can also provide a differential coefficient of friction on the two surfaces.

Unbalanced Structures

Typical of the unbalanced structures are films designed for vertical form/fill applications with a fin seal. A base resin such as HDPE is augmented by an EVA skin layer for sealability. For horizontal wrappers a polypropylene skin layer is sometimes selected for its higher thermal resistance. In another important unbalanced application, cast polypropylene, which has a limited sealing range, is combined with more sealable polyethylene for single-slice cheese wrappers.

Table 1. Typical Coextruded Film Structures

Outside Layer	Core Layer	Inside Layer	Remarks
LDPE	White LDPE + recycle	LDPE	Virgin skin layers control surface quality
HDPE	HDPE + recycle	EVA	EVA provides rapid fin seal machinability
EVA	LLLDPE1+ recycle	EVA	EVA increases lap seal cycle time
LDPE	LLDPE + recycle	LDPE	LDPE limits film’s elongation under load
EMA	OPP	EMA	Oriented polypropylene sealability poor without coextruded or coated skin layers

There are multilayer films using only one polymer (AAA), unbalanced coextruded films with two or more polymers (ABC), and balanced multilayer structures with two or more polymers (A/B/C/B/A).

Balanced Structures

Balanced coextruded structures typically have a core resin selected for its functionality plus two skin layers that are heat-sealable. Oriented polypropylene films, for example, are increasingly coextruded instead of coated to attain machinable surfaces (see Film, Oriented Polypropylene). Frozen-food films are typically constructed with an EVA skin layer for enhanced sealability. Heavy-wall bags are regularly coextruded with LLDPE (linear LDPE) cores for impact strength and LDPE skins to limit the film's elongation under load. Primal meats are packaged in PVDC shrink film with EVA skins for seal integrity.

Two main applications that have shifted from monolayer films to coextrusions are overwrap and stretch wrap (see Wrapping Machinery, Stretch Film). Horizontal overwrap machines typically use an MDPE film or an LDPE–HDPE blend.

Coextrusions can provide comparable overwrap machinability at lower gauge. Stretch wrap is difficult to produce as a single-layer structure without blocking. By splitting stretch wrap into a multilayer structure, its LLDPE core can be provided with controlled tackiness on the surface layer.

BIBLIOGRAPHY

E. Hatfield and L. Horvath, “Coextrusions for Flexible Packaging” in A. J. Brody and K. S. March, eds., *The Wiley Encyclopedia of Packaging Technology,* 2nd ed., John Wiley & Sons, New York, 1997, pp. 237–239.

Cited Publications

1. J. Dooley and H. Tung, “Coextrusion” in J. Kroschwitz, ed., *Mark Encyclopedia of Polymer Science and Technology,* 2nd edition, Wiley, Hoboken, NJ, 2002.
2. “Economic News,” www.flexpack.org, June 19, 2008.
3. J. A. Wheatley and W. J. Schrenk, “Polymetic Reflective Materials (PRM),” *J. Plast. Film Sheeting* **10** (1994).
4. M. J. Kirwan, “Paper-Based Flexible Packaging” in M. J. Kirwan, ed., *Handbook of Paper and Paperboard Packaging Technology,* Blackwell Publishing Ltd., London, 2005.

COLORANTS

Updated by Staff

INTRODUCTION

Colorants for packaging materials fall into two broad categories: pigments and dyes. Used for both decorative and utilitarian purposes, their diversity is at least as broad as the diversity of packaging materials. This article focuses on their use in inks, plastics, and paperboard. The emphasis is on pigments, which are far more prevalent than dyes in packaging applications.

Pigments are black, white, colored, metallic, or fluorescent organic or inorganic solids that are insoluble and remain essentially unaffected by the medium into which they are dispersed or incorporated. They are small in particle size, generally in the range of 0.01- to 1.0-μm diameter. Pigments produce color by selective absorption of light, but because they are solids, they also scatter light. Light scattering is undesirable in a transparent material, but desirable if opacity is the goal. Some organic pigments that are extremely small in particle size scatter very little light and therefore act like dyes—for example, Benzimidazolone Carmine HF3C, with a particle size of 0.05–0.07 μm. Some colorless pigments, relatively large in particle size (up to 100 μm), are used as fillers or extenders.

Organic pigments are characterized by high color strength, brightness, low density, high oil absorption, transparent and translucent properties, bleeding in some solvents, and heat and light sensitivity. In the world at large, the major user of organic pigments is the printing-ink industry. In packaging, they are useful for numerous applications such as printing on cartons, labels, and flexible bags. Naphthol reds, for example, are used for soap- and detergent-carton printing because of bleed resistance. Barium lithol is a most important red for packaging flexo and gravure inks, and alkali blue is used in glycol-type inks (see Inks; Printing).

Compared to organic pigments, inorganic pigments are more opaque, less bright, and weaker in tint; but they are more resistant to heat, light, chemical attack, bleed, migration, and weathering. They have higher density, lower cost, and less antioxidant effect. The major use of inorganic pigments is the paint industry. In packaging, they are useful for printing on cartons, bags, and glass bottles. Examples are molybdate orange for gift wrap and vinyl film, titanium dioxide for glass beverage bottles, and cadmium reds for plastics. Metallic pigments such as gold, platinum, and silver help vivify colorants for glass bottles.

Dyes are intensely colored solubilized organic substances that are retained by the medium that they color by chemical bonding, absorption, or mechanical retention. Dyes produce color by absorption of light, without affecting transparency and high optical purity. The major user of dyes is the textile industry. In packaging, dyes are used to some extent in inks for special effects, for coloring paperboard, and to produce tinted transparent plastic containers or films.

PIGMENTS IN PACKAGING

Properties of pigments are a function of the chemical composition as well as other physical and chemical parameters such as particle size, particle shape, particle-size distribution, and the nature of the pigment's surface. Particle size affects a number of pigment properties. Lightfastness improves with increasing particle size, and oil absorption and strength decrease. Hue is also affected by particle size; for example, an orange pigment usually appears yellower as the size decreases. Narrower particle-size distribution leads to cleaner hue, higher gloss, and lower oil absorption and viscosity. A pigment's light absorption, light-scattering power, and particle size contribute to determining the hiding power of the pigment. Opacity is also affected by refractive index differences between the pigment and the dispersing medium. Selection of a pigment for a specific application depends on a great many physical properties and characteristics. Some of the factors involved in pigment selection are listed in Table 1. Table 2 lists most of the pigments used in packaging materials.

SPECIAL-EFFECT PIGMENTS

Nacreous pigments, like basic lead carbonate and titanium-coated mica, are used for luster effects for cosmetic containers. Fluorescent pigments and dyes are used in gravure inks for carton printing and special effects in gift-wrap printing. They are also used as colorants for blow-molded bottles, closures, tubs, cartons, and pails. Other special-effect pigments include luminescent and phosphorescent pigments, as well as metallics (e.g., aluminum flake and various copper bronzes that vary in shade, depending on their chemical composition).

DYES IN PACKAGING

When dyes are used for coloration, as in plastics, they must be checked for migration, heat stability, lightfastness, and sublimation.

For plastic materials, dyes that are widely used are azo dyes, anthraquinone dyes, xanthene dyes, and azine dyes that include induline and nigrosines. Azo dyes such as Solvent Red 1, 24, and 26, Solvent Yellow 14 and 72, and Solvent Orange 7 are colorants for polystyrene, phenolics, and rigid PVC. Better heat stability and better weatherability are obtained from anthraquinone dyes such as Solvent Red 111, Blue 56, Green 3, and Disperse Violet 1 in the coloration of acrylics, polystyrene, and cellulosics. Basic Violet 10 is a xanthene dye used in phenolics. Solvent Green 4, Acid Red 52, Basic Red 1, and Solvent Orange 63 are used for polystyrene and rigid PVC. Azine dyes produce exceptionally jet blacks and are used in ABS, polypropylene, and phenolics. A perinone dye, Solvent Orange 60, has good light and heat stability for ABS, cellulosics, polystyrene acrylics, and rigid PVC. ABS, polycarbonate, polystyrene, nylon, and acrylics may be colored with quinoline dye. Methyl Violet and Victoria Blue B, two basic triphenylamine dyes, find limited use in phenolics.

For printing inks, five dye families are of particular interest: azo, triphenylmethane, anthraquinone, vat, and phthalocyanine. *Certified food colorants* are used in packaging applications where the printed surface is in direct contact with food. The package is the immediate container and is not a shipping container or other protectve container (1). Dyes for paper include acid, basic (including resorcine and alizarine), and direct dyes. Basic directs are used to color containers, boxboards, wrapping paper, and multiwall bags.

COLORANTS FOR PRINTING INKS

Most priniting-ink pigments are organic. Printing inks are used for a broad range of packaging items such as cartons,

Table 1. Some Factors Involved in Selection of a Pigment

For Printing Ink	For Plastics	For Paper and Paperboard
Color	Color	Whiteness
Masstone	Nature of resin	Brightness
Tintone	End use	Opacity
Printone	Toxicity	Rheological properties
Density	Heat resistance	Bulk
Rheological behavior	Resistance to migration	Specific gravity
Opacity	Bleeding	Transparency
Oil absorption	Crocking	Refractive index
Texture	Bronzing	Use cost
Chemical resistance	Plateout	Color
Acid	Lightfastness	Color migration
Alkali	Weatherability	Flocculation
Solvent resistance	Dispersibility	Gloss
Heat resistance	Electrical properties	Mechanical properties
Oil, fat, grease, soap resistance	Morphological properties	Ink absorbency
Lightfastness	Filtration characteristics	Sheet strength
Resistance to sterilizing	Effect on mechanical properties	Abrasion
Bake stability	Use cost	
Pearlescence	Tensile strength	
Iridescence		
Viscosity		
Bulk		
Transparency		
Use cost		
Particle size		

Table 2. Listing of Pigments for Utilization in Packaging Materials

				Color Permanency,^{b} Indoor Fadeometer, Max *h*		Plastic Applicability^c		
Common Name	Color Index Name Number	CAS Registry Number	Application^a	Masstone	Tint	Wide Use	Limited Use	Some Other Data
				White Pigments				
Zinc oxide^d	White 4 77947	[*1314-13-2*]	2			A,B,C,D,E,F,G,H,I, J,K,L,M,N,O	P	Refractive index 2.01; embrittles oleoresinous film
Lithopone	White 5 77115	[*1345-05-7*]	1			A,B,C,E,G,H,I,J, K,L,M,N,O,P	D	Refractive index 1.84
Titanium dioxide (anatase, rutile)^d	White 6 77891	[*13463-67-7*]	1,2,3	250	250	A,B,C,D,E,G,H,I, J,K,L,M,N,O,P,Q,	F	Refractive index 2.76 (rutile) Refractive index 2.55 (anatase)
Zinc sulfide	White 7 77975	[*1314-98-3*]	1,2			A,B,C,D,G,H,I,J,K,L,M	N,O,P	Refractive index 2.37
Calcium carbonate^d	White 18 77220	[*471-34-1*] [*1317-65-3*]	1,3					Refractive index 1.48–1.65; brightness 85–95% (nat.) 92–98% (syn.)
Kaolin clay, bentonite^d	White 19 77004	[*1332-58-7*] [*8047-76-5*]	1,3					Refractive index 1.56; low brightness
Blanc fixe, process white^d	White 21 77120	[*7727-43-7*]	1					Refractive index 1.64
Aluminum hydrate^d	White 24 77002	[*1332-73-6*]	1					Refractive index 1.57; rheology modifier for inks
Talc, French chalk^d	White 26 77718	[*8005-37-6*] [*14807-96-6*]	1					Refractive index 1.54–1.59
Silica^d	White 27 77811	[*7631-86-9*] [*14808-60-7*] [*61790-53-2*] [*63231-67-4*]	1					Refractive index 1.45–1.55; brightness 91–96% (syn.), $<90\%$ (nat.)
				Black Pigments				
Aniline black	Black 1 50440	[*13007-86-8*]	1	120	20–30			Gives deep matt black or velvety finish
Lamp and vegetable black	Black 6 77266	[*1333-86-4*]	1					
Carbon black^d Furnace black Channel black	Black 7 77266	[*1333-86-4*]	1,2	>240	>240	A,B,C,D,E,F,G,H,I, K,L,M,N,O,P,Q	J	Excellent stability to light, chemicals and heat; good uv absorption
Iron titanate brown spinel	Black 12 77543	[*68187-02-0*]	2			A,B,C,D,F,G,H,J,K, L,M,N,O	E,I,P,Q,	Excellent heat, light, and chemical resistance
Iron copper chromite black spinel	Black 23 77429		2			A,B,C,D,F,G,H,J,K, L,M,N,O	E,I,P,Q	Certain plastics embrittled by iron
Manganese ferrite black spinel	Black 26 77494	[*68186-94-7*]	2			A,B,C,D,F,G,H,J,K, L,M,N,O	E,I,P,Q	Certain plastics embrittled by Mn and Fe
Copper chromite black spinel	Black 28 77428	[*68186-91-4*]	2			A,B,C,D,F,G,H,J,K, L,M,N,O	E,I,P,Q	Excellent chemical and heat resistance
				Red Pigments				
Naphthol Red FRR	Red 2 12310	[*6041-94-7*]	1,3	20–80	15–20			Printing inks for packaging; excellent chemical resistance

(*Continued*)

Table 2. Continued

				Color Permanency,[b] Indoor Fadeometer, Max *h*		Plastic Applicability[c]		
Common Name	Color Index Name Number	CAS Registry Number	Application[a]	Masstone	Tint	Wide Use	Limited Use	Some Other Data
Toluidine Red	Red 3 12120	[*2425-85-6*]	3	40–140^{D}	5–20^{F}		D,H,J	
Chlorinated Para Red[d]	Red 4 12085	[*2814-77-9*]	1,3	40–120^{DL}	5–30^{F}	N,O	D,H,J	Bleeds in organic solvents and overstripes
Naphthol Carmine FB	Red 5 12490	[*6410-41-9*]	1	60–120	20–40			Excellent chemical resistance; gravure inks for packaging
Naphthol Red F4RH	Red 7 12420	[*6471-51-8*]	1,3	80–160^{F}	60^{F}		C,E,J,K,L,M,N,O,Q	Packaging printing inks; excellent chemical resistance
Naphthol Red FRLL	Red 9 12460	[*6410-38-4*]	1,3	80–120	40–60			Excellent chemical resistance
Naphthol Red FRL	Red 10 12440	[*6410-35-1*]	1,3	60–80^{F}	25–35			
Naphthol Red (medium shade)	Red 17 12390	[*6655-84-1*]	1,3	30–80^{F}	10–30^{FL}		A,D,E,H,J,K,N,O	Excellent chemical resistance; packaging printing ink
Naphthol Red (light yellow shade)	Red 22 12315	[*6448-95-9*]	1,3	40–80^{DFL}	15–30^{FL}		A,D,E,H,J,K,N,O	Printing ink for packaging, superior chemical resistance
Naphthol Red (dark blue shade)	Red 23 12355	[*6471-49-4*]	1,3	60^{DFL}	30^{FL}		A,D,E,H,J,K,N,O	Printing inks for packaging
Pyrazolone Red	Red 38 21120	[*6358-87-8*]	1	50–75^{DF}	15–50^{F}	A,P	C,D,E,H,J,K,N,O	Metal decorating and packaging printing inks
Dianisidine Red	Red 41 21200	[*6505-29-9*]	1				K,P,Q	Packaging printing inks
Permanent Red 2B (barium)	Red 48:1 15865:1	[*7585-41-3*]	1,2,3	10–30^{DFL}	10–20^{FL}	K,L,M,N,O,P	A,D,E,J,Q	Carton and label printing inks; excellent brightness
Permanent Red 2B (calcium)	Red 48:2 15865:2	[*7023-61-2*]	1,2	20–100^{DFL}	10–50^{FL}	E,K,P,Q	D,J,L,M,N	Printing inks for labels and cartons; bright and good tint strength
Permanent Red 2B (strontium)	Red 48:3 15865:3	[*15782-05-5*]	1,2	10–30^{D}	5–30^{F}			Excellent brightness; solvent-based printing inks
Permanent Red 2B (manganese)	Red 48:4 15865:4	[*5280-66-0*]	1	80–120^{DFL}	30–40^{DFL}			Poor alkali and soap resistance
Lithol Red (sodium)	Red 49 15630	[*1248-18-6*]	1	5–10	2–5			Excellent tint strength
Lithol Red (barium)	Red 49:1 15630:1	[*1103-38-4*]	1	5–40^{DL}	2–20^{FL}		P	Resination increases transparency; poor alkali and soap resistance
Lithol Red (calcium)	Red 49:2 15630:2	[*1103-39-5*]	1	2–5^{DL}	2–5^{FL}			Excellent brightness and tint strength
Red 2G (calcium)	Red 52:1 15860:1	[*17852-99-2*]	1,2	10–15^{D}	5–10^{FL}	N	B,C,D,E,H,J,K,O,P,Q	Process magenta for printing inks
Red Lake C[d] (barium)	Red 53:1 15585:1	[*5160-02-1*]	1,2	5–50^{DFY}	1–25^{F}	A	C,D,E,H,J,K,L,N,O	Standard warm red; foil coatings
Lithol Rubine[d] (calcium)	Red 57:1 15850:1	[*5281-04-9*]	1,2	15–50^{DFL}	5–25^{FL}	E,K	C,D,H,J,L,M,N,O,P,Q	Standard process magenta; foil coatings
Pigment Scarlet (barium)	Red 60:1 16105:1	[*15782-06-6*]	1,2	25–50^{D}	20–30^{B}	A,C,E,K,L,N,O,P	D,H,J,M,Q	Printing ink for gloss labels, waxed papers, metal decorating; foil coatings

(Continued)

Anthosine Red 3B (Ba, Na)	Red 66 18000:1	[*68929-13-5*]	1					Metal decorating printing inks
Anthosine Red 5B (Ba, Na)	Red 67 18025:1	[*68929-14-6*]	1					Metal decorating printing inks; transparency
Rhodamine Y (PTMA)	Red 81:1 45160:1	[*12224-98-5*]	1	15–30^{D}	5–10^{F}			Brillant, color purity, good tint strength
Rhodamine Y (SMA)	Red 81:3 45160:3	[*63022-06-0*]	1	15–30^{D}	5–10^{F}			Process magenta printing inks
Rhodamine Y (PMA)	Red 81:x 45160:x	[*63022-07-1*]	1	15–30^{D}	5–10^{F}			Poor alkali and soap resistance
Alizarine Red B	Red 83 58000:1	[*72-48-0*]	1	120	30		A,D,E,H,J,N,O,P,Q	Metal decorating inks, butter and soap packages
Thioindigold Red	Red 88 73312	[*14295-43-3*]	2	120–160	80–120	P,Q	D,H,J,K,L,M,N,O	Clean color with excellent fastness
Phloxine Red (Lead)	Red 90 45380:1	[*1326-05-2*]	1	$<20^{DF}$	$<20^{F}$			Poor chemical, light, solvent and heat resistance
Synthetic Red^{d} iron oxide	Red 101 77491	[*1309-37-1*]	1,2			A,E,H,J,K,L,N,P,Q	C,F,G,M	Foil coatings, Fe embrittles certain plastics
Molybdate Orange	Red 104 77605	[*12656-85-8*]	1,2	20–160^{D}	20–160	D,H,J,P,Q	A,B,K,L,M,N,O	Poor alkali and acid resistance
Cadmium Sulfoselenide Red	Red 108 77202	[*58339-34-7*]	2	500	200^{GF}	A,B,C,D,E,G,H,I,J,K,L, M,N,O,P,Q	F	Bright, clean, intense colors
Cadmium Sulfoselenide Lithopone Red	Red 108:1 77202:1	[*58339-34-7*] and [*7727-43-7*]	2	500	150^{GF}	A,B,C,D,E,G,H,I,J,K,L, M,N,O,P,Q	F	Sensitive to mineral acids
Naphthol Red FGR	Red 112 12370	[*6535-46-2*]	1,2,3	60–160	40–160			Excellent brightness, very good lightfastness; paper coatings
Mercadium Red	Red 113 77201	[*1345-09-1*]	2			A,B,C,D,E,F,G,H,J, K,L,M,N,O,P,Q		Poor lightfastness when light and moisture present
Cadmium mercury Lithopone Red	Red 113:1 77201:1	[*1345-09-1*] and [*7727-43-7*]	2			A,B,C,D,E,F,G,H,J, K,L,M,N,O,P,Q		Low tint strength
Quinacridone Magenta Y	Red 122 73915	[*980-26-7*]	1,2	140–160^{D}	80–120^{F}	K,L,M,P,Q	A,B,C,D,H,J,O	Soluble in nylon and certain plastics
Perylene Vermilion	Red 123 71145	[*24108-89-2*]	1,2			A,B,C,E,J,K,P,Q	L,M,N	Transparent; good fastness properties
Disazo Red	Red 144	[*5280-78-4*]	1,2	160	100–140	C,E,H,J,K,L,M,N, O,P,Q	D	High-performance pigment
Naphthol Carmine FBB	Red 146 12485	[*5280-68-2*]	1,2,3	60^{D}	30^{D}	C,E,H,J,K,L,M,N, O,P,Q	D	Packaging and metal decorating inks, paper coatings
Perylene Red BL	Red 149 71137	[*4948-15-6*]	1,2	40–80^{D}	20–80	A,B,C,E,H,I,J,K,L, M,N,O,P,Q	G	Metal decorating
Disazo Scarlet	Red 166	[*12225-04-6*]	1,2			C,E,H,J,K,L,M,N, O,P,Q	D	High-performance pigment
Brominated Anthanthrone Red	Red 168 59300	[*4378-61-4*]	1			J,K,L,M,P,Q		Metal decorating printing ink
Rhodamine 6G	Red 169 45160:2	[*12224-98-5*]	1	30^{D}	10^{F}			Gravure printing inks, excellent tint strength
Naphthol Red F5RK	Red 170 12475	[*2786-76-7*]	1	80–120^{D}	60^{D}	C,L,M,N,O,Q	A,E,F,I,J,K,P	Brilliant excellent chemical resistance
Benzimidazolone Maroon HFM	Red 171 12512	[*6985-95-1*]	1	120	120	C,K,L,N,P,Q	A,B,E,G,J	Foil coatings; very transparent
	Red 175 12513	[*6985-92-8*]	1,2	160^{F}	120^{F}	C,K,L,N,P,Q	A,B,E,G,J	

(*Continued*)

Table 2. Continued

				Color Permanency,[b] Indoor Fadeometer, Max *h*		Plastic Applicability[c]		
Common Name	Color Index Name Number	CAS Registry Number	Application[a]	Masstone	Tint	Wide Use	Limited Use	Some Other Data
Benzimidazolone Red HFT								Highly transparent; inks for packaging and metal decorating
Benzimidazolone Carmine HF3C	Red 176 12515	[*12225-06-8*]	1,2	80^{D}	40^{F}	C,K,L,N,O,P,Q	A,E,F,I,J,M	Transparent, bright, chemical resistant; packaging and metal decorating inks
Anthraquinoid Red	Red 177 65300	[*4051-63-2*]	2	120	70–100	C,D,G,H,J,K,L,M,P,Q	B,E,I	Transparent
Perylene Maroon	Red 179 71130	[*5521-31-3*]	2			A,B,C,E,J,K,P,Q	L,M	Excellent fastness properties
Naphthol Rubine F6B	Red 184		1	60^{F}	15^{F}			Printing ink for packaging
Benzimidazolone Carmine HF4C	Red 185 12516	[*61951-98-2*]	1,2	60^{D}	30^{F}	C,K,L,N,O,P,Q	A,E,F,I,J,M	Process magenta for metal decorating
Naphthol Red HF4B	Red 187 12486	[*59487-23-9*]	1,2	80^{F}	40^{F}	K,L,N,P,Q	C,E,I,J,M	Bright, transparent; packaging and metal decorating inks
Naphthol Red HF3S	Red 188 12467	[*61847-48-1*]	1,2	80^{D}	60^{D}	K,L,N,P,Q	C,E,I,J,M	Superior chemical resistance; packaging inks
Perylene Scarlet	Red 190 71140	[*6424-77-7*]	2					Transparent, dull tints
Rubine Red (calcium)	Red 200 15867	[*58067-05-3*]	1,2	$20–70^{FL}$	$10–15^{FL}$			Oil-based printing inks, poor soap, solvent and alkali resistance
Quinacridone Scarlet	Red 207	[*1047-16-1*] and [*3089-16-5*]	1,2	$120–320^{D}$	$80–120^{F}$			High-performance pigment
Benzimidazolone Red HF2B	Red 208 12514	[*31778-10-6*]	1,2	80^{F}	40^{F}			Bright medium red; packaging and metal decorating inks
Quinacridone Red Y	Red 209 73905	[*3089-17-6*]	1	120^{D}	120^{F}			Soluble in nylon
Naphthol Red F6RK	Red 210		1	60^{D}	30^{F}	C,J,K,L,M,N,O,Q	A,E,F,I,J,K,P	Packaging printing inks
Perylene Red Y	Red 224 71127	[*128-69-8*]	2	>500	>500			Transparent; very good strength and fastness properties
				Orange Pigments				
Dinitraniline Orange[d]	Orange 5 12075	[*3468-63-1*]	1,3	$40–80^{DFL}$	$5–10^{DFL}$			Good chemical resistance
Pyrazolone Orange	Orange 13 21110	[*3520-72-7*]	1	$10–60^{DFL}$	$5–10^{FL}$	K,L,N,O,P,Q	A,C,D,H,J,M	
Dianisidine Orange	Orange 16 21160	[*6505-28-8*]	1,2	$25–75^{DF}$	$5–50^{F}$	J,P,Q	K,L,M	
Persian Orange Lake (A1)	Orange 17:1 15510:2	[*15876-51-4*]	1					Inks for waxed bread wrappers
Pure Cadmium Orange; Cadmium Sulfoselenide Orange	Orange 20 77202	[*12556-57-2*]	2	500	100^{GF}	A,B,C,D,E,F,G,H,J,K,L,M,N,O,P,Q		Lightfastness needs protection from moisture
			2	500	100^{GF}			

(*Continued*)

Cadmium Sulfoselenide Orange Lithopone	Orange 20:1 77202:1	[*12556-57-4*] and [*7727-43-7*]				A,B,C,D,E,F,G,H,J,K, L,M,N,O,P,Q		
Mercadium Orange	Orange 23 77201	[*1345-09-1*]	2			A,B,C,D,E,F,G,H,J,K, L,M,N,O,P,Q		Fades in presence of light and moisture
Mercadium Lithopone Orange	Orange 23:1 77201:1	[*1345-09-1*] and [*7727-43-7*]	2			A,B,C,D,E,F,G,H,J,K, L,M,N,O,P,Q		
Disazo Orange	Orange 31	[*5280-74-0*]	2					
Diarylide Orange	Orange 34 21115	[*15793-73-4*]	1,2,3	20–60^{D}	15–30^{F}	K,L,N,O,P,Q	A,C,D,H,J,M	Bleeds in some overstripes
Benzimidazolone Orange HL	Orange 36 11780	[*12236-62-3*]	1	120^{D}	80^{F}	A,C,E,J,K,L,M,N, O,P,Q	B,G,I	
Naphthol Orange	Orange 38 12367	[*12236-64-5*]	1,2	80–120^{D}	10–40	K,L,N,O,P,Q	C,E,I,J,M	Printing inks for metal decorating and packaging
Perionone Orange	Orange 43 71105	[*4424-06-0*]	1	160^{D}	120^{D}	J,K,L,M,P,Q		
Ethyl Red Lake C (barium)	Orange 46 15602	[*67801-01-8*]	1,2	5–30^{FL}	2–20^{FL}			Metal decorating inks
Quinacridone Gold	Orange 48	[*1047-16-1*] and [*1503-48-6*]	2	120–320^{D}	80–120^{F}			
Quinacridone Deep Gold	Orange 49	[*1047-16-1*] and [*1503-48-6*]	2	120–320^{D}	80–120^{F}			
Benzimidazolone Orange HGL	Orange 60		1,2			E,J,K,P,Q	A,B,C,F,H,L,M,N,O	Transparent
Tetrachloroisoindolinone Orange	Orange 61		2	200–500	200–500			High-performance pigment
Benzimidazolone Orange H5G	Orange 62		1	>160	60–160			Oil-based printing inks
Orange GP	Orange 64		2					
Yellow Pigments								
Arylide Yellow G	Yellow 1 11680	[*2512-29-0*]	1,3	60–200^{DFG}	20–40^{F}			Printing inks requiring alkali resistance, aqueous dispersions for paper
Arylide Yellow 10G	Yellow 3 11710	[*6486-23-3*]	1,3	120–200^{DF}	20–60^{F}			Printing inks requiring alkali resistance, aqueous dispersions for paper
Diarylide Yellow AAA	Yellow 12 21090	[*6358-85-6*]	1	10–60^{DFL}	2–30^{FL}		A,C,D,E,H,J,K,M, N,O,P	
Dairylide Yellow AAMX	Yellow 13 21100	[*5102-8-30*]	1,2	20–60^{F}	10–40^{F}	A,P	D,E,G,H,I,J,K,L,N,O	
Diarylide Yellow AAOT	Yellow 14 21095	[*5468-75-7*]	1,2	10–60^{DFL}	5–40^{FL}	G,K	A,C,D,E,H,J,L,M, N,O,P,Q	
Permanent Yellow NCG	Yellow 16 20040	[*5979-28-2*]	1,2	80–120^{DF}	30^{F}	C,E,K,L,M,N,O,Q	A,I,P	Printing inks for packaging
Diarylide Yellow AAOA	Yellow 17 21105	[*4531-49-1*]	1,2	20–80^{DF}	10–40^{F}	G,K,L,M,P,Q	A,C,D,H,I,J,N,O	
Chrome Yellow (primrose, light, medium)	Yellow 34 77600 77603	[*1344-37-2*]	1	10–160^{D}	10–160^{FG}	D,H,J,P,Q	A,B,I,K,L,M,N,O	
Cadmium Zinc Yellow (primrose, lemon, golden)	Yellow 35 77205	[*12442-27-2*]	2	400	100^{GF}			

(*Continued*)

Table 2. Continued

Common Name	Color Index Name Number	CAS Registry Number	Application[a]	Color Permanency,[b] Indoor Fadeometer, Max *h*		Plastic Applicability[c]		Some Other Data
				Masstone	Tint	Wide Use	Limited Use	
Cadmium Zinc Yellow Lithopone	Yellow 35:1 77205:1	[*12442-27-2*] and [*7727-43-7*]	2	400	80^{GF}			
Cadmium Yellow	Yellow 37 77199	[*1306-23-6*]	2	400	$70–100^{GF}$	A,B,C,D,E,F,G,H,I,J, K,L,M,N,O,P,Q		
Cadmium Lithopone Yellow	Yellow 37:1 77199:1	[*1306-23-6*] and [*7727-43-7*]	2	400	80^{GF}	A,B,C,D,E,F,G,H,I,J, K,L,M,N,O,P,Q		
Synthetic Yellow[d] Iron oxide	Yellow 42 77492	[*12259-21-1*] [*51274-00-1*]	2					
Nickel Antimony Titanium Yellow Rutile	Yellow 53 77788	[*8007-18-9*] [*71077-18-4*]	2	1000^{F}	1000^{F}	A,D,E,F,G,H,J,K,L, M,N,O,P,Q	B,C,I	
Diarylide Yellow AAPT	Yellow 55 21096	[*6358-37-8*]	1	35–60	25–40			Printing inks for waxed food wrappers
Arylide Yellow 4R	Yellow 60 12705	[*6407-74-5*]	1	60–100	$35–50^{F}$			Alkali resistance and lightfast printing inks
Arylide Yellow RN	Yellow 65 11740	[*6528-34-3*]	1,3	$80–150^{DF}$	60–100			Lightfast and alkali resistance printing inks; aqueous dispersions for paper
Arylide Yellow GX	Yellow 73 11738	[*13515-40-7*]	1,3	$70–120^{DF}$	$30–40^{F}$			Lightfast and alkali resistance printing inks; aqueous dispersions for paper
Arylide Yellow GY	Yellow 74 11741	[*6358-31-2*]	1,3	$70–120^{DF}$	$20–60^{F}$			Lightfast and alkali resistance printing inks; aqueous dispersions for paper
Diarylide Yellow H10G	Yellow 81 21127	[*22094-93-5*]	1	60–160	$30–60^{F}$	C,E,K,L,N,O,P,Q	A,M	Printing inks for packaging
Diarylide Yellow HR	Yellow 83 21108	[*5567-15-7*]	1,2	$70–240^{DF}$	$20–60^{DF}$	P,Q	C,D,E,H,J,K,L,M,N	
Disazo Yellow G	Yellow 93	[*5580-57-4*]	1,2	120	80	A,K,L,M,N,O,P		
Disazo Yellow R	Yellow 95	[*5280-80-8*]	1,2	120	80	A,K,L,M,N,O,P		Metal-free printing inks
Permanent Yellow FGL	Yellow 97 11767	[*12225-18-2*]	1	120^{D}	120^{F}	A,C,E,J,K,L,M,N,O,Q	B,G,N,I	Heat, lightfast, and alkali-resistant printing inks
Arylide Yellow 10GX	Yellow 98 11727	[*12225-19-3*]	1	$80–120^{F}$	$40–60^{F}$			
FD&C Yellow No. 5[d] aluminum lake	Yellow 100 19140:1	[*12225-21-7*]	1			C,F,G,K,L,O,P	E	Colorant for food, drugs, cosmetics, and food-contact surfaces; metal decorating
Fluorescent Yellow	Yellow 101 48052	[*2387-03-3*]	2					
Diarylide Yellow GGR	Yellow 106	[*12225-23-9*]	1	$30–50^{F}$	$20–30^{F}$			Printing inks for packaging
Tetrachloroisoindolinone Yellow G	Yellow 109		2	200	100–200	H,J,K,L,M,P,Q	A,D,G,N,O	

(*Continued*)

Tetrachloroisoindolinone Yellow R	Yellow 110		2	200–500	200–500	E,H,J,K,L,M,P,Q	A,D,G,N,O	
Diarylide Yellow H10GL	Yellow 113 21126	[*14359-20-7*]	1	60^{F}	30^{F}	C,E,K,L,M,N,O,P,Q	A,G,I	Printing inks for packaging
Diarylide Yellow G3R	Yellow 114		1	40^{F}	15^{F}			Oil-based ink for packaging
Azomethine Yellow	Yellow 117	[*21405-81-2*]	1					Food packaging
Zinc ferrite brown spinel	Yellow 119 77496	[*12063-19-3*] [*68187-51-9*] [*61815-08-5*]	2					
Diarylide Yellow DGR	Yellow 126		1	25–35^{F}	10–20^{F}			
Diarylide Yellow GRL	Yellow 127		1	30–50^{F}	20–30^{F}	A,K,L,N,O,Q	C,D,E,H,J,M,P	Inks for packaging and metal decorating
Disazo Yellow GG	Yellow 128		2					
Quinophthalone Yellow	Yellow 138		2					
Isoindoline Yellow	Yellow 139		2			C,D,E,J,K,L,M,N,P,Q		
Nickel Yellow 4G	Yellow 150	[*68511-62-6*]	2					
Benzimidazolone Yellow H4G	Yellow 151		1,2	160^{F}	120^{F}	A,C,E,J,K,L,M,N,O,P,Q	F,G,H,I	
Diarylide Yellow YR	Yellow 152	[*20139-66-6*]	1	20–40^{F}	10–20^{F}			Lead chromate replacement
Benzimidazolone Yellow H3G	Yellow 154		1,2	160^{F}	120^{F}	C,E,J,K,P,Q	A,F,H,L,M,N,O	Inks for metal decorating
Nickel Niobium Titanium Yellow Rutile	Yellow 161 77895	[*68611-43-8*]	2					
Chrome Niobium Titanium Buff Rutile	Yellow 162 77896	[*68611-42-7*]	2					
Manganese Antimony Titanium Buff Rutile	Yellow 165 77899	[*68412-38-4*]	2					
				Green Pigments				
Brilliant Green (PTMA)	Green 1 42040:1	[*1325-75-3*]	1,3	10–15^{D}	5–10^{F}			Poor alkali and soap resistance
Brilliant Green (PMA)	Green 1:x 42040:x	[*68814-00-6*]	1,3	10–15^{D}	2–10^{F}			Excellent brilliance, color purity
Permanent Green (PTMA)	Green 2 42040:1 49005:1	[*1328-75-3*] and [*1326-11-0*]	1,3	10–15^{D}	5–10^{F}			Poor alkali and soap resistance
Permanent Green (PMA)	Green 2:x 42040:x 49005:1	[*68814-00-6*] and [*1326-11-0*]	1,3	10–15^{D}	5–10^{F}			For lustrous appearance in printing
Malachite Green (PTMA)	Green 4 42000:2	[*61725-50-6*]	1,3					Poor alkali and soap resistance
Phthalocyanine Green	Green 7 74260	[*1328-53-6*]	1,2	120–320^{DFL}	120–160^{FL}	A,B,D,E,G,H,I,J,K,L,M,N,O,P,Q	C	Standard green for printing inks
Nickel Azo Yellow (green gold)	Green 10	[*51931-46-5*]	2	>70	>70	E,N,O,P	C,D,F,H,I,J,K,L,M,Q	Very lightfast pigment
Chrome Green	Green 15 77510 77603	[*1344-37-2*] and [*25869-00-5*]	2,3	60–80^{DG}	20–40	J	C,D,H,I,N,O,P,Q	
Cobalt chromite green spinel	Green 26 77344	[*68187-49-5*]	2	>160	>160			Outstanding chemical and light stability
	Green 36 74265	[*14302-13-7*]	1,2	160–320^{FL}	120–160^{FL}		C,G	High-performance pigment

(*Continued*)

Table 2. Continued

Common Name	Color Index Name Number	CAS Registry Number	Application^a	Color Permanency,^{b} Indoor Fadeometer, Max *h*		Plastic Applicability^c		Some Other Data
				Masstone	Tint	Wide Use	Limited Use	
Phthalocyanine Green (Cl, Br)						A,B,D,E,H,I,J,K,L,M, N,O,P,Q		
Cobalt titanate green spinel	Green 50 77377	[*68186-85-6*]	2					Outstanding chemical, light, and heat stability
Blue Pigments								
Victoria Blue (PTMA)	Blue 1 42595:2	[*1325-87-7*]	1,3	20–40^D	5–10^F			Outstanding brilliance
Victoria Blue (SMA)	Blue 1:2 42595:3	[*68413-81-0*]	1,3	30–40^D	5–10^F			SMA salt is stronger than PMS/PTMA but not as clean
Victoria Blue (PMA)	Blue 1:x 42595:x	[*68409-66-5*]	1,3	15–40	5–10^F			Printing inks with lustrous appearance
Permanent Blue (PMA) Peacock	Blue 9:x 42025:x	[*68814-07-3*]	1,3					Excellent color purity and strength
Phthalocyanine Blue Alpha (red crystallizing)^d	Blue 15 74160	[*147-14-8*]	1,2	120–320^{FLZ}	120–160^{FL}	A,B,C,D,E,G,H,I,J, K,L,M,N,O,P,Q	F	Excellent transparency, chemical resistance, and lightfastness
Phthalocyanine Blue Alpha (R, NC)	Blue 15:1 74160 74250	[*147-14-8*] [*12239-87-1*]	1,2	120–320^{FLZ}	120–160^{FL}	A,B,C,D,E,G,H,I,J, K,L,M,N,O,P,Q		
Phthalocyanine Blue Alpha (R, NCNF)	Blue 15:2 74160 74250	[*147-14-8*] [*12239-87-1*]	1,2,3	120–320^{FLZ}	80–160^{FL}	A,B,C,D,E,G,H,I,J,K, L,M,N,O,P,Q		
Phthalocyanine Blue Beta (G, NC)	Blue 15:3 74160	[*147-14-8*]	1,2	120–320^{FLZ}	120–160^{FL}	A,B,C,D,E,G,H,I,J,K, L,M,N,O,P,Q		Standard process cyan.
Phthalocyanine Blue Beta (G, NCNF)	Blue 15:4 74160	[*147-14-8*]	1,2	120–320^{FLZ}	80–160^{FL}	A,B,C,D,E,G,H,I,J,K, L,M,N,O,P,Q		
Phthalocyanine Blue (metal free)	Blue 16 74100	[*574-93-6*]				A,G,K,L,M,N,O,P		
Fugitive Peacock Blue (Ba)	Blue 24 42090:1	[*6548-12-5*]	1					
Iron Blue, Milori Blue^d	Blue 27 77510	[*25869-00-5*]	1	>160^G	20–80^C	K	B,C,D,H,J,L,N,O,P,Q	
Cobalt Blue^d	Blue 28 77346	[*1345-16-0*] [*68186-86-7*]	2	>100^F	>100^G	B,C,D,E,F,G,H,J,K, L,M,N,O,P,Q	I	Outstanding lightfastness, chemical resistance
Ultramarine Blue^d	Blue 29 77007	[*57455-37-5*]	1,2	>240	>240	A,C,E,G,H,K,L,M,N, O,P,Q	F,I,J	
Cobalt chromite blue-green spinel	Blue 36 77343	[*68187-11-1*]	1	>100^F	>100^G	B,C,D,E,F,G,H,I,J,K, L,M,N,O,P,Q		
Alkali Blue G	Blue 56 42800	[*6417-46-5*]	1					For printing inks needing alkali and soap resistance
Indanthrone Blue	Blue 60 69800	[*81-77-6*]	2	120–160^F	120–160^F	O,P,Q	B,C,D,E,H,J,K,L,M,N	
Alkali Blue, Reflex Blue	Blue 61 42765:1	[*1324-76-1*]	1	2–10^{FL}	2–10^{FL}			Poor alkali and soap resistance

(Continued)

Victoria Blue (CFA)	Blue 62 42595:x		1	20^{D}	10^{F}			
				Violet Pigments				
Rhodamine B (PMA)	Violet 1:x 45170:x	[*63022-09-3*]	1	$<20^{D}$	$<20^{F}$			Brilliant, color purity and tint strength
Methyl Violet (PTMA)	Violet 3 42535:2	[*1325-82-2*]	1,3	15–30^{DFL}	5–10^{FL}		A,D,H,J,N	Printing inks with lustrous appearance
Fugitive Methyl Violet	Violet 3:3 42535:5	[*68308-41-8*]	1	2–5^{FL}	2–5^{FL}			
Methyl Violet (PMA)	Violet 3:x 42535:x	[*67989-22-4*]	1,3	15–30^{DG}	5–10^{F}			Standard purple for printing inks
Cobalt violet phosphate	Violet 14 77360	[*13455-36-2*]	2					Decolorizer for clear and white plastics
Ultramarine Violet and Pink[d]	Violet 15 77007	[*12769-96-9*]	2			A,D,E,G,H,I,J,K,L, M,N,O	B,C,P,Q	Counteracts yellowing in plastics on heating
Manganese Violet[d]	Violet 16 77742	[*10101-66-3*]	2					
Quinacridone Violet	Violet 19 73900	[*1047-16-1*]	1,2	120–320^{D}	80–120^{F}	I,J,K,L,M,N,O,P,Q	A,B,C,D,E,H	High-performance pigment
Crystal Violet (CFA)	Violet 27 42535:3	[*12237-62-6*]	1	20^{d}	10^{F}			
Benzimidazolone Bordeaux HF3R	Violet 32 12517	[*12225-08-0*]	1,2	60	40	K,L,N,O,P,Q	C,E,I,J,M	Inks for packaging and metal decorating
Cobalt lithium violet phosphate	Violet 47 77363	[*68610-13-9*]	2					Decolorizer for clear and white plastics
Cobalt magnesium red-blue borate	Violet 48 77352	[*68608-93-5*]						Decolorizer for clear and white plastics
				Brown Pigments				
Monoazo Brown (copper)	Brown 5 15800:2	[*16521-34-9*]	1,2	>160	>100			Amber effects in plastics
Magnesium ferrite	Brown 11 77495	[*12068-86-9*]	2					
Diazo Brown	Brown 23		1,2			K,L,P,Q	A,M,	High-performance pigment
Chrome Antimony Titanium Buff Rutile	Brown 24 77310	[*68186-90-3*]	2	>1000	>1000	A,C,D,E,F,H,J,K,L,N, O,P,Q	G,I,M	Outstanding light, heat, and chemical stability
Benzimidazolone Brown HFR	Brown 25 12510	[*6992-11-6*]	1,2	80^{F}	80^{F}	K,L,N,O,P,Q	C,M	Printing inks for metal decorating; highly transparent
Zinc iron chromite brown spinel	Brown 33 77503	[*68186-88-9*]	2					Excellent heat and light resistance
Iron chromite brown spinel	Brown 35 77501	[*68187-09-7*]	2					Excellent heat and light resistance
				Metal Pigments				
Aluminum Flake[d]	Metal 1 77000	[*7429-90-5*]	1,3			B,C,D,E,G,J,K,L,M, N,O,P,Q		Nonleafing for decorative inks, paper coatings
Copper powder, bronze powder[d]	Metal 2 77400	[*7440-50-6*] [*7440-50-8*] [*7440-66-6*]	1,2			B,C,D,G,J,K,L,N,O,P,Q	E,I,M	Decorative printing inks for packaging, labels

---

[a] Key to application: 1, printing inks; 2, plastics; 3, paper and paper coatings.

[b] Key to permanency failures: F, fades; D, darkens; L, loses gloss; B, turns bluer; G, turns gray or greener; Y, turns yellower; Z, bronzes.

[c] Key to plastic: A, ABS; B, acetal; C, acrylic; D, amino resins; E, cellulosics; F, fluoroplastics; G, nylons; H, phenol–formaldehyde; I, polycarbonate; J, polyester or alkyd; K, polyethylene, low density; L, polyethylene, high density; M, polypropylene; N, polystyrene, general-purpose; O, polystyrene, impact-resistant; P, flexible vinyl; Q, rigid vinyl.

[d] Pigments having an FDA status.

bags, labels, metal cans, rigid containers, and decorative foils. Table 2 highlights the pigments used for printing (see Inks). Important qualities of pigments for printing inks are contribution to printing properties (i.e., rheology and bleeding), print appearance (i.e., the color has sales appeal), and useful service life (i.e., resistance to fading and chemicals). The advantage of optimizing particle size to provide good rheology is frequently compromised by simultaneously deteriorating coloristic properties. Such changes may be prevented by a suitable pigment preparation or by predispersing a pigment in nitrocellulose resin (NC chips) (2).

In general, most ink pigments can be utilized in most types of inks; but there are minor differences in a pigment's performance that must occasionally be considered. For example, pigments for lithographic inks must not bleed in water or very mild inorganic acidic (phosphoric acid) solutions. Glossy finishes require small-particle-size pigments. Metal deco printing is a speciality area. Traditional inks, which are processed at temperatures of 140°C and more, must be quite thermally stable to retain ther color value during application. Printed metal sheets that are to be used in food cans must be capable of being sterilized in the presence of food without degradation (2).

Extender pigments are essentially transparent or translucent and contribute to neither hiding power nor color. They are formulated into inks to extend the covering power of strong pigments and enhance the working properties (e.g., to increase viscosity without affecting color).

COLORANTS FOR PLASTICS

In selecting a colorant for plastics, in addition to the colorant characteristics listed in Table 1, the resins, their properties and compatibility, and the method by which they are processed are critical factors. Because PVC and its copolymers liberate acid at high temperature, acid-sensitive colorants like cadmium reds and ultramarine blue must be used with care. Hansa yellow tends to crock (smudge) in polyethylene. In polyethylene, impurities in pigments such as cobalt and manganese should be avoided. Polyacetals and thermoplastic polyesters are sensitive to moisture. Molten nylon acts as a strong acidic reducing agent and can decolorize certain dyes and pigments.

Colorants must have enough heat stability to withstand processing temperatures, which are sometimes very high [e.g., ~600°F (316°C)] for injection-molded polycarbonate. Some organic pigments processed at 350°F (177°C) for 15 min begin to show signs of darkening, but some cadmium pigments can withstand 1500°F (816°C) without noticeable color change. When processing temperatures are particularly high, the choices for colorants are few. Colorants may also interact with other additives used in the plastic such as heat and light stabilizers; for example, sulfur-containing cadmium pigments react with the nickel-bearing stabilizers used in some film-grade polypropylenes.

Dispersion

Dispersing the pigment to develop color strength and maximum optical properties is an extremely important issue that is continually being addressed. Dispersion of dyes is not as great a problem because of their solubilizing nature. Pigments need to be properly wetted by vehicles or the plastic medium. Mixing does not change size and surface area of particles, dispersion does (3). Colorants must be able to be uniformly dispersed in any plastic system. If the system is unable to tolerate the shear energy required to disperse a given colorant, no matter how desirable the colorant may be, it is not usable in that system. Poor dispersion can lead to processing difficulties for thin films. Agglomeration and aggregation in pigments are due to many reasons, such as different particle sizes and shapes, presence of soluble salts or impurities, and improper grinding. Improvements in pigment dispersion have been obtained through surface treatments of pigments and better grinding techniques.

PIGMENTS FOR PAPER AND PAPERBOARD

Two reasons for the use of pigments, fillers, and extender pigments for paper goods are as follows: (a) to load or fill the sheet during manufacture to increase bulk and improve such properties as opacity, printability, and brightness and (b) to coat the paper to provide opacity, black out defects, or color and provide a receptive surface for printing. Table 3 lists some pigments and extender pigments used in the manufacture of paper goods for packaging. Organic pigments are used as paper coating wherever improvements in finishing efficiency, sheet gloss, or print gloss are important. They are used extensively in coated folding boxboard and woodfree-coated printing papers (4).

Table 3. Some Pigments for Use in Paperboard and Paper

Filler	Composition	Refractive Index	Brightness	Use
Titanium dioxide (rutile, anatase)	TiO_2	2.7 for rutile	98–99	Board, waxing stock, board liner, paper, specialties
		2.55 for anatase	98–99	
Clay (kaolin)	Aluminum silicate	1.87–1.98	80–85	Board, papers, specialties
Calcium carbonate (natural and precipitated)	$CaCO_3$	1.56	95–97	Printing, cigarette papers
Talc	Magnesium silicate	1.57	70–90	Board, printing papers
Gypsum	$CaSO_4$	1.57–1.61	80–90	Boards, specialties
Diatomite (natural)	Diatomaceous earth	1.40–1.46	65–75	Improves bulk and drainage of board stocks

SUPPLY OPTIONS

Colorants are supplied in a number of different forms.

Dry Powder. Pigments and dyes are sold in a dry powder form. Pigments are ground to suitable working particle sizes for ink manufacture or for dispersion into a plastic. The maximum working particle size of most dry pigments is about 44 μm. These pigments should pass through a 325-mesh (44-μm) screen with less than 1% retention.

Presscake Form. This is an undried form in which the presscake may typically contain 25–50% solids. Presscake is used for the preparation of water-based inks.

Flushed Colors. Pigments are dispersed in a varnish or mineral oil forming a paste that has a pigment content of $\geq$30%. The flushing operation involves exhanging water in a presscake for the organic vehicle by a kneading action in a Sigma blade mixer.

Chip Dispersion. Pigments dispersed in resin with little or no solvent content. Usually prepared by milling on a two-roll mill.

Resin-Bonded Pigment. This is a dry flush in which the vehicle phase is a resin.

Easy-Dispersing Pigments and Stir-In Pigments. Pigments treated with surfactants or polymeric materials to make them readily dispersible in various ink vehicles, particularly gravure ink types.

Color Concentrates. Colorant dispersed in resin that is let down with virgin resin to make final product. Color concentrate is supplied in chip or pellet form. Liquid- and paste-color concentrates are used for vinyls.

Slurry. Titanium dioxide and other white pigments or extenders are supplied to the paper industry in this manner.

REGULATORY REQUIREMENTS

In the United States, the FDA and USDA administer the laws of interest to colorists. The Federal Food, Drug and Cosmetic Act, the Federal Hazardous Substances Act, and the Poison Prevention Packaging Act of 1970 are relevant FDA statutes. The Meat Inspection Act and the Poultry Inspection Act of the USDA relate to colored plastics where food contact is a concern. The Food, Drug, and Cosmetic Act (1938) was modified by the Food Additives Amendment (1958) and the Color Additives Amendment (1960) (revised in 2007). Pigments that have an FDA status are noted in Table 2 (see Food, drug, and cosmetics regulations).

The regulations do not deal with colorants in printing inks. Four groups of colorants are presently permitted in the coloring of plastics for food, drugs, and cosmetics: (1) certified colorants are those in the list of FD&C certified dyes and alumina lakes; (2) purified nonaniline colors include iron oxides, carbon black, and titanium dioxide for use in and on plastics; (3) use of a noncertified colorant may be petitioned—responsibilities for compliance with regulations rests with user; and (4) a colorant is not subject to the color-additive amendment if there is an impermeable barrier between colorant and food, drug, or cosmetics, and no chance of contact.

Product packaging constitutes about one-third of municipal solid waste and is usually decorated with various colors. Some of them containing heavy mtetals. The Coalition of Northeast Governors developed a model to regulate cadmium, hexavalent chromium, lead, and mercury in packaging to a decreasing content, not leachability, of 100 ppm. Currently, 19 states have enacted this legislation with some limited variations (5). Lead pigments and other toxic pigments have been eliminated from inks for food packaging. For nonfood packaging, the three major lead pigments for inks are chrome yellow, molybdate orange, and phloxine red. No other heavy metal pigments are used in significant quantities.

BIBLIOGRAPHY

R. C. Schiek "Colorants" in *The Wiley Encyclopedia of Packaging Technology*, 1st edition, CIBA-GEIGY Corporation, pp. 204–217; in *EPT,* 2nd edition, pp. 242–256.

Cited Publications

1. *Code of Federal Regulations,* 21CFR 70.3, revised April 1, 2007.
2. W. Herbst and K. Hunger, *Industrial Organic Pigments,* 3rd edition, Wiley-VCH, Weinheim, 2004.
3. R. A. Eppler, "Colorants for Plastics" in *Kirk-Othmer Encyclopedia of Chemical Technology*, Wiley, Hoboken, NJ, 2004.
4. J. Blecschmidt, in H. Holick, ed., *Handbook of Paper and Paperboard,* Wiley-VCH, Weinheim, 2006, Chapter 2.
5. *New York State Hazardous Packaging Law,* New York State Department of the Environment, www.dec.ny.gov, accessed March 2008.

COMPRESSION MOLDING

INTRODUCTION

Compression molding is used to produce parts from thermosetting plastics that cannot be processed by thermoplastic processing methods (see Blow molding; Extrusion; Injection molding; Thermoforming). In compression molding, polymerization takes place in a closed mold. Under heat and pressure, the materials fill the mold cavity, and with continued heat and pressure, the part hardens as crosslinking takes place (see Polymer properties). The irreversibility of the process rules out thermoplastic-processing methods, but it also imparts excellent heat resistance and dimensional stability to the part. These properties are essential for many nonpackaging applications (e.g., electrical components, automotive and aircraft body panels). The use of compression molding in packaging is very limited. Thermosets rarely provide the best balance of properties, and compression molding is not economical for high-volume production.

Compression molding is sometimes used to prepare thermoplastic test specimens. For example, in the ASTM

D4703-93 method, thermoplastic resins in the form of pellets are loaded into the mold, heated above their melting points, formed, and cooled into a plaque or sheet for making test specimens.

APPLICATIONS

Compression molding has some advantages compared to injection molding, including lower tooling costs and fewer stresses in the part, but design flexibility and production rates are limited (1). For many years, the only significant packaging application for thermosets was closures (see Closures). The main application today remains screw caps (2, 3). At one time, phenolic and urea–formaldehyde molding compounds were the only plastics available for the purpose. Also used today are melamine-formaldehyde and polyester molding compounds (4).

A resurgence of interest in thermosets and compression molding occurred in recent years because of the heat required for "ovenable" packages. Compression-molded glass-filled thermoset polyesters, which had been used for some time for heat-and serve airline trays, moved into the consumer market with the advent of frozen dinners that could go from the freezer to the convection or microwave oven and then to the table.

BIBLIOGRAPHY

"Compression Molding" in *The Wiley Encyclopedia of Packaging Technology*, 1st edition, John Wiley & Sons, New York, 1986, pp. 217–218; 2nd edition, 1997, p. 256.

Cited Publications

1. G. A. Tanner, "Compression Molding," in *Modern Plastics Encyclopedia*, Vol. 61, no. 10a, 1984–1985.
2. J. C. Brennan and B. F. Day.,"Packaging" in J. G. Brennan, ed., *Food Processing Handbook,* Wiley, VCH, Weinheim, Germany, 2006.
3. D. R. Bain and P. A. Giles, in D. R. Bain, ed., *Technology of Plastics Packaging for the Consumer Market,* Sheffield Academic Press, Sheffield, UK, 2001, pp. 146–158.
4. M. Xanthas and D. B. Todd, "Plastics Processing," *Kirk–Othmer Encyclopedia of Chemical Technology*, 5th edition, Vol. 19, John Wiley & Sons, Hoboken, NJ, 2006.

COMPUTER APPLICATIONS: PALLET PATTERNS

Brad Leonard
Cape Systems, Inc., Allen,
Texas

THE PALLET PATTERN

A *pallet pattern* is a group of finished products in a single layer that is organized onto a pallet base of slip-sheet. The most common form of finished product container is the corrugated shipping case. Multiple layers of product on a pallet or slip-sheet are used to create a unitized pallet load. The efficiency of the pallet pattern, as well as the resulting pallet load, is determined by the quantity and size of the product in the corrugated shipping case. For example, a 16-in. × 12-in. case gets 10 cases per layer in a pallet pattern on a 48-in. × 40-in. pallet surface. However, a 16 1/8-in. × 12-in. case can only get 8 cases per layer, a 20% decrease. Therefore, optimizing each case size, the product inside, the pallet pattern, and the number of layers can have a dramatic effect on the utilization of space within the entire distribution system. Typically, companies average 80–85% utilization on the pallet. This underutilization of space offers many industries the opportunity to realize tremendous savings.

THE USE OF THE PALLET

Pallets were first used for handling finished goods in the distribution environment in the 1930s. Modern wooden pallets were introduced on a larger scale during World War II by the military. Then, in 1946, the food-processing industry along with transportation companies, as well as the pallet manufacturing industry, recommended the adoption of the 40-in × 32-in. and the 48-in. × 40-in. pallets.

Today, hundreds of millions of pallets are sold each year to support the handling and movement of all types of manufactured products. Pallets are produced in many shapes and sizes; however, the most common size in North America is 48 in. × 40-in. The most common materials are wood, plastic, corrugated board, and metal.

THE PALLET PATTERN PROCESS: MANUAL METHOD

Traditionally, companies used laborious manual methods for calculating pallet patterns, and they used "pallet pattern charts" and lookup tables to create very basic styles. This manual method of calculation was slow and inaccurate. Manual methods also proved to be inconsistent. They considered only a few alternatives and were narrow in scope, and communicating the results made preplanning difficult. With increasing mass-production techniques and the growth of product distribution on a nationwide basis, manual methods were simply inadequate.

COMPUTERS IN PACKAGING

The earliest use of computers, in the traditional packaging function, dates back to the early 1970s. At that time, the mainframe computer was a large room-sized machine used to crunch numbers for activities related to accounting, sales, and inventory control. Its use by the packaging department was limited primarily to providing simple pallet pattern configurations and a small amount of secondary package design work. Both of these tasks were performed without the use of scaled diagrams or graphics. However, mainframe programs were expensive and not readily available. Therefore, the computer did not play a significant role in packaging until much later.

The introduction of the first PCs in the mid-1980s brought about a very different opportunity as the use of these personal computers became more prominent in the business world. The PC, with the advantage of its small size, ease of use, and computing power, brought many changes. One of the most important changes was the quick acceptance of its emerging role in the area of packaging, where an ideal use was the creation of pallet patterns and packaging design.

THE PALLET PATTERN PROCESS USING THE COMPUTER

In the packaging process, the pallet base is usually considered to be fixed in size and cannot be easily changed. However, there are many variables relating to the loading of the pallet that can be evaluated to produce the optimum pallet pattern. These parameters include the maximum load height and weight, underhang and overhang requirements, minimum area and cube utilization, the size of the corrugated case, and the dimension loaded vertical on the pallet. The final compression strength of the corrugated case and the various pattern styles that can be considered for each pattern type are also important factors to be considered.

To add to these requirements, in 1988 a Joint Industry Shipping Container Committee (drawn from the membership of the Food Marketing Institute, the Grocers' Association) published the *Voluntary Industry Guidelines for Dry Grocery Shipping Containers*. These guidelines were aimed at reducing the damage from poor palletization standards. The two major components of these guidelines were to standardize on the 48-in × 40-in. pallet surface without the use of any overhang. This move also prompted other industries to adopt similar guidelines.

WHAT BENEFITS THE COMPUTER CAN PROVIDE

It is virtually impossible for the human mind or a simple lookup chart to consider the combinations of all these factors and individual user requirements. This is why today's computers and pallet loading programs are ideally suited to the task.

In a PC-based pallet pattern/loading program, the user simply types in the basic information required for the specific analysis. This information usually consists of the corrugated case size, the dimension vertical for stacking on the pallet, the weight of the filled case, the pallet size and type, allowable underhang and overhang, the maximum finished load height and weight, and the pattern types to be considered. This information is then saved in a file format that can be retrieved for later use and from which the various solutions are generated.

From the information provided by the computer, the user can then determine which pattern arrangement will best meet their needs. Hundreds, even thousands, of potential solutions can be considered in the process. The computer's calculations are consistently accurate and enable rapid evaluation of all patterns and load plans that fit within the restrictions applied by the user.

From the list of available solutions, the user can select one or more options for viewing and printing (both text and graphical reports) showing the exact location of each case, the layout of the cases within the layer, and the arrangement of each layer on the pallet. After viewing a satisfactory solution, the user can then use the software to model the compression strength performance of the corrugated case.

Using modern computers to calculate the pallet patterns is highly effective. Studies have shown that a 10% improvement is pallet load utilization is common. Often improvements are much higher than 10%. This is especially important because these improvements directly affect the profitability of an organization. In larger organizations, such savings can be many hundreds of thousands of dollars annually.

THE FUTURE OF COMPUTERIZED PALLET PATTERNS

Today's users of computerized pallet pattern/loading programs are looking for even more sophistication and reality in their ability to create reports and share this information with others.

Current pallet loading programs are far more sophisticated. They are used throughout the world to evaluate different pallet pattern options, the best pallet size to use, and which packing medium will do the best job. All of these tasks are now calculated in seconds. Each solution created can be viewed as three-dimensional color diagrams. Graphics technology now allows users to select the rotation and stacking of individual pattern layers. Even the layout of individual cases can be edited to meet any special pattern layout requirements. High-quality, very detailed and customized reports can be produced in seconds.

Modern programs can also be used to export palletizing information directly to other programs. Examples are word-processing applications, spreadsheets, specification systems, manufacturing systems, and CAD programs. Information from pallet loading programs can even provide the necessary information to drive robotic and mechanical palletizing equipment. Such information can then be shared with other departments to create a finished product specification, which can be easily communicated, controlled, and monitored for future updates and modifications.

Manufacturing companies are now beginning to understand the importance of multiple product pallet patterns, for retail store shelf replenishment and as end-aisle displays for promotional use. Programs to deal with these "multiproduct loading" situations work with many of the same inputs as standard pallet loading software. The one exception is that many different products are calculated on the same pallet at the same time, adding an extra level of complexity to the final solution.

For many multinational companies, the key to future growth is importing and exporting their products to or from other countries. This means considering how to palletize their products on at least two different pallet sizes: one for domestic use and one for import and export. This type of application is also ideally suited to modern computers and pallet loading programs.

Technology is now available that allows pallet loading programs to merge artwork and graphic images onto the surfaces of both cases and pallets. This brings a new and extremely powerful "visual reality" to the world of computerized pallet patterns and allows the most comprehensive pallet pattern reports and specifications to be created "at the touch of a button."

SUSTAINABILITY

Sustainability is a key to the future role of product palletization, and the use of the computer has never been needed more. The computer can model thousands of palletizing alternatives, across a wide range of sustainability variables, and quickly determine the most sustainable alternative. Companies will soon be measured by a number of sustainable benchmarks, one of which is efficient palletization. Using the current sustainability scorecard, cube utilization and transportation, two major elements of optimum palletization, count toward 25% of the total scorecard value.

SUMMARY

The use of computers for creating pallet patterns has come a very long way in the past 30 years. Because of the increasing pressures for modern industries to continue to change and become more competitive, there are still many opportunities that lie ahead, such as the combining of product design, packaging, and palletizing, to speed time to market. Computer models are now being used to explore the entire product life cycle, from start to finish, in an attempt to drive all the unnecessary costs out of the product. As technology continues to advance and computers become more powerful, the computerization of pallet patterns and their impact on the total business operation will grow in many directions.

CONSULTING

Howard R. Leary
Howard R. Leary Associates

Consultants are available in many technical and commercial areas of packaging. There are as many specialties among packaging consultants as there are disciplines in the packaging industries. They are independent experts who provide a temporary resource to fill the needs of a company for various reasons and purposes. This article defines who consultants are, what they can do for an organization, where they can be found, and how to best use them, evaluate them, and do business with them.

ROLES OF A PACKAGING CONSULTANT

There are any ways that an independent packaging expert can help an organization in its packaging-related business. The consultant brings skill and experience as well as a fresh point of view to a project or problem. The consultant's expertise can go to work for large and small organizations in a variety of ways:

Solve Problems. A company may have a need to resolve a concern or pursue and opportunity that can be most effectively addressed with outside expertise. Examples may be package failures in the field, loss of packaging line efficiency or the desire for higher efficiency, quality issues with packaging material, material incompatibility with packaging equipment, changing or revising the package to make it more appealing to the consumer, complying with regulations, or the desire to reduce packaging material cost.

Because the consultant is independent and perceived as an expert, he or she has certain situational power. An independent consultant can have the ability to convince members of an organization of the effectiveness of a solution better than another member of the organization can because the outside expertise validates the information. Often a factor in an operation is overlooked or generally accepted, and a fresh view from a consultant can expose the value of that factor.

The consultant has had many different experiences, usually in different industries. People working in a company generally do not have the opportunity for such varied experience, so the consultant can bring a fresh point of view and different assumptions to a situation that can lead to new and useful ideas.

Typically, a consultant would be hired first to investigate the issue and prepare a written report of recommended action. This might involve monitoring the packaging line operation, doing store or warehouse checks, testing package samples, evaluating the proficiency of line personnel, working with a material supplier on process control or other forms of evaluation. Often the implementation of the recommended action is carried out, led or supported by the consultant under a separate contract.

Augment the Packaging Staff. For companies with in-house package development or packaging engineering staffs, occasions arise when extra help is needed temporarily. This could be a major project that brings a greater workload than the group can absorb without falling behind on other committed work, or the loss of a key member of the group. In such a case a consultant can bridge the gap. Also if a major project employs a form of package different from the usual, the consultant can provide expertise in the new area for the current project as well as train the staff members who will provide continuing support.

True consultants will work on a project basis, according to a defined scope of work. The consultants need not work in the client's office, except for occasional meetings. It is wise to have a company contact person to handle the internal communication, so that the consultant can concentrate on the technical matters, in which case the client will get the most value for the fees spent.

Hiring a consultant to fill a temporary need may be a wise choice compared to a new hire, not only because there is no commitment of continued employment but because the company has use of a highly skilled expert.

Be the Packaging Staff. Some companies may not have a permanent staff devoted to developing packages or designing packaging lines, either because they are relatively small, they are in a startup situation, or their normal production historically didn't required new things. The need for a packaging specialist may be for a special project, in which case the consultant would work to a specified scope of work to achieve the goals of the project, such as design a new package or a new packaging line. In the case of a startup company, the objectives may be to design packages for new products, then source them, and then set up a packaging operation, which could be set up as separate consulting contracts. For a company that has occasional need for packaging technology support, keeping a consultant on a retainer may be the best arrangement.

Set Up a Packaging Design or Engineering Department. Many packaging consultants got their experience working in companies. If a company wants to start a package development or engineering function, or evaluate the way it is organized within the company, an experienced consultant can fill this need.

Assessment. Many companies see a need to evaluate what their company has as compared to what they could or should have. A consultant can be brought in who has had experience with other businesses to assess the shelf impact of the package, efficiency of the packaging operation, cost effectiveness of the packages, and so on. The consultant typically would examine the issues in question and prepare a report with recommendations. Implementing the recommendations may then be a second consulting contract.

In a case like this, the consultant's varies experience makes him or her uniquely qualified to achieve the desired result.

Source for Ideas. Many marketing-oriented businesses are always looking for new ideas to improve the acceptance of their products. "Creative design" consultants will brainstorm a product application and develop presentation drawings and/or models for review. These consultants are typically industrial or graphic designers with creative skill and a penchant for consumer appeal issues.

Provide Focus on an Issue. A problem or concern can sometimes persist in an organization and not be effectively addressed within an organization. In such cases, bringing in an outside expert can highlight the issue and draw attention to it. Consultants tend to be listened to more than regular members of the organization are, probably because they are a novelty or because they're being paid for their opinion. The consultant is independent of any group or department within the organization so he or she is free to dig into the roots of the issue wherever they lie. Often a fresh look from an outside perspective can easily see factors that can be less obvious to insiders. Examples of issues to which this might apply are (a) low-quality performance in a packaging or package manufacturing operation and (b) unsatisfactory packaging line efficiency or waste level.

Expert Witness. Many packaging consultants make themselves available as expert witnesses for attorneys. They investigate the evidence on the matter in litigation and provide an expert's report. In some cases they will testify in court or in deposition.

Validation. In regulated industries, particularly pharmaceutical and medical device, all packages and packaging machinery must be formally validated. Some consultants provide validation-related services such as preparation and execution of functional requirements specifications, preparation and execution of factory acceptance test protocols and qualification protocols, engineering studies to determine qualifyable process parameters, and package specifications for New Drug Approval submissions.

TYPES OF CONSULTANTS

There are various sources of consulting services, and each has its characteristic strengths and situations in which they can best serve. Different consultant types and their applications are described below.

Independent Individual Consultants. Experienced package developers or engineers sometimes choose to work independently as consultants. These are typically people that have gained experience in a company that packages or manufactures packages. They could be package developers, machinery engineers, marketers, graphic designers, industrial designers, logistics experts, regulatory specialists, polymer chemists, or other practitioners of other packaging-related technology. They typically work on limited-term defined projects, although some will accept longer-term assignments. When a project requires expertise beyond that of the consultant, he or she will bring in "associates," other consultants that will share the project to provide a complete solution for the client. When you see a consulting firm listed as "(name) & Associates" the firm is usually a single person who uses a network of other consultants. This can be a very effective approach, because the consultants brought in are known to the lead consultant to be effective in their area, and the lead consultant is free to pick the best people for the project.

Independent consultants are best for creative ideas and flexibility in their work approach and business arrangements. They have limited hours per week availability, so they may not be able to handle very large projects. They can be effective on large projects as advisors who bring special expertise. When using an independent consultant, you know that the person whose expertise was the reason for selecting them is doing the work.

Independent consultants should be defined as people who are dedicated to consulting as a practice, as compared to people who seek to consult until a new position in a company comes along, or who moonlight after hours. A full-time professional consultant will provide the most reliable results for a client.

Small Consulting Firms. Some consultants will form small companies that have support staff. One or two consultants typically lead the technical work, and others, such as designers or technicians, perform tasks that complete the project work. The support staff generally works under close direction of the lead consultants.

These firms are similar in their creativity and flexibility to independent individuals, but can usually handle more or larger projects.

Large Consulting Firm. There are no large consulting firms that specialize only in packaging, but there are numerous large engineering and construction firms that have packaging groups. For these firms, packaging is usually part of a larger project, such as the design and construction of a new manufacturing plant. These firms also have validation specialists who can provide packaging system validation specialists.

College Professors. Professors at the colleges that offer packaging degree programs offer themselves as consultants and sometimes employ students to assist in testing activities. They generally work on primary technology investigations as compared to implementing projects for manufacturing facilities for example.

Material Suppliers. Some companies that supply packaging materials offer technical services to large customers at no charge as a means to bring in or support sales. This work can often be effective and useful, but it is, of course, not independent of specific commercial interest. If the customer has a strong technical packaging leader in control of these activities, they can provide useful results. If there is an issue involved that requires independent judgment, an independent consultant may be required who has no commercial ties.

Who Are Not True Consultants. Commissioned sales representatives or brokers sometimes present themselves as consultants in that they provide design expertise to potential customers. These people can take care of the packaging needs for a customer, helping them make decisions and selling them materials or machinery. These firms are primarily sales organizations and should not be classified as consultants.

Contract engineers and designers should not be classified as consultants. They work regular hours at the customer's offices in place of permanent employees, rather than consult on a project basis.

As mentioned previously, people between jobs or moonlighters should not be classified as full-time professional consultants.

VALUE OF CONSULTING SERVICES

Most consultants charge by the hour, and in the case of a fixed price contract the price is based on the estimated hours at the consulting rate. Rates are generally higher than the hourly pay rate of a company employee, which can give the impression that the consultant is expensive. If used properly, however, the consultant can offer very good value for the fees spent.

The consultant will only spend the time required to meet the objective set, assuming that he or she is allowed to work independently of the client's location and office hours, so the time is used efficiently. He or she should have a high level of skill for the task assigned and as such should be capable of achieving the result in the least amount of time practical. The company, of course, has no overhead expense for the time spent by the consultant. Most independent consultants have a good deal of experience and expertise, which in most cases is at a very high level compared to less experienced packaging professionals employed in a company packaging group.

DOING BUSINESS

A good business arrangement will assure satisfactory results from a consulting assignment. Requirements and expectations should be clear for both parties. The first step is to define the scope of work to be performed. The detail of this depends upon the need. If a project is in the conception stage, such as the creation of a new package, the scope may be to define what needs to be done to bring it from idea to production. In a more mature project, a detailed scope of activities would be appropriate, such as design line layout, prepare bid specifications, write package specifications, and so on. Based on these requirements, the consultant should develop a proposed budget to perform the specified tasks. A good proposal should list the tasks specified. This will help if requirements change during the project's course, in which case the consultant should advise the client in advance if changing requirements affect the budget.

There may be situations when research is required to enable the consultant to develop the desired proposal. An example might be a requirement to improve a packaging process, where it is necessary for the consultant to spend a day at the client's plant, including travel, and a day developing an approach to the project. In such a case it would be appropriate for the consultant to charge for this, and the recommended plan in the proposal is something of value that the client has even if the consultant is not hired.

Consultants generally work on a time and expense basis, charging for the actual time spent and any costs incurred. This does not mean that the budget cannot be controlled. Companies generally issue a purchase order for the proposed budget amount; and if invoicing exceeds the purchase order amount, it won't be paid.

Commonly, the consultant will require a down payment to provide cash flow, especially on longer projects. Independent consultants are individuals that need a steady income, so they are not in a position to wait for project completion for payment.

Sometimes a consultant will be willing to offer a fixed price for a project if the efforts required are deemed to be predictable. This is typically when the consulting is part of a larger project done by a large engineering firm. The consultant will be careful to clearly define specified deliverables in such a case.

A retainer is a regular fee, usually paid monthly, to retain a consultant for occasional work not defined in a purchase order. The consultant is treated as a vendor, not an employee. This can work in a situation where both parties know that the needs and required work level are fairly consistent. A retainer arrangement can be convenient but lacks control of work scope and spending, so it is not frequently used.

QUALIFYING A PROSPECTIVE CONSULTANT

A consultant should be someone whose opinion you respect and value. To be sure that that will be the case, his or her qualifications should be investigated. One can ask the consultant what ideas might be pursued for the subject project, how his or her experience was gained in the relevant technical area, what other project work he or she may have done that have similarity, and what other clients he or she has worked for. Get references and ask them if the work was satisfactory. The consultant should be able to provide a resume of experience for your examination.

An ethical consultant will not take on a project for which he or she does not have the proper skill and knowledge. In such a case, he or she should recommend another consultant that will be reliable in that area. On some projects, consultants can join together to provide a complete solution.

If one has been consulting for a long period of time, that would indicate a professional level of capability and a commitment to the profession.

When considering a firm rather than an individual consultant, find out who will be doing the work and/or who is in responsible charge of it. Check the qualifications of those people.

WHERE TO FIND THEM

Referrals are the most reliable source of good consultants. If you know someone willing to recommend one based on positive experience, the selection process is simplified and short. If this is not the case, there are sources that list or find consultants.

Searchable Internet directories are available that include packaging materials, machinery, and services, including consulting. Packaging trade publications sponsor these (*Food & Drug Packaging, Packaging Digest*), as well as PMMI (Packaging Machinery Manufacturers Institute) and ASTM (American Society for Testing Materials). Thomas Register includes packaging consultants among their all-encompassing industry lists.

There are services that have consultants' abilities on file and locate them for clients, both industrial and legal IMSD Expert Services and others. These firms typically bill the client and pay the consultant directly.

IoPP (the Institute of Packaging Professionals) has a Consultants' Council that hosts a directory accessible through the institute's web site (www.iopp.org) or directly at www.packagingconsultants.org. The directory lists the council's members by expertise and industry served, and requests for information or proposals can be sent to the members of the group. All the consultants listed have been qualified by the council to be committed experienced consultants who agree to uphold the Consultants' Council's code of ethics.

If the requirements are of a research-based nature, the colleges and universities that have packaging programs can refer professors for consulting in their field of specialty.

CONSUMER RESEARCH

Joseph O. Eastlack, Jr.
Saint Joseph's University,
Philadelphia, Pennsylvania

It goes without saying that strong and effective packaging has to be an integral part of the marketing mixture. A strong package is equity. A strong package, sells a product, and a strong package justifies premium pricing.

But who defines a strong package? The shopper, because the shopper is the individual who ultimately picks up and buys the product or quickly bypasses or totally ignores it. From both the shoppers' and the marketers' point of view, the shopping experience is a battle. On the one hand, the shopper has to battle through competing items, through heavy shopper traffic, and through the checkout lines. The marketer, on the other hand, has to break through the clutter to get a few precious seconds of consideration. Several startling facts about shopping in the United States are now available. Examples include the following:

- The average supermarket contains over 25000 items, with 17000 new products being introduced each year.
- The average shopper is spending approximately 24 min in his/her normal shopping trip. This time translates to 1440 s to consider 25000 items. Not surprisingly, approximately one third of the packages on the shelf were being completely ignored. Even with more than 8200 products by-passed, the U.S. supermarket shopper still is faced with 16000+ items being considered in 1440 s; not much time for a marketer to sell his/her product.

In the United States, it is now generally acknowledged that 80% of the decisions made in today's supermarkets are in-store decisions and, of equal importance, 60% are impulse purchases. This observation means that the packaging and its effectiveness in breaking through the clutter and conveying the right imagery can determine, and does determine, a product's success or failure.

How do marketers research packaging to ensure that our products will receive a fair share of nonplanned or impulse purchases? Initially, we must define an effective package. An effective package is as follows:

- Is simple
- Quickly communicates what the product is
- Makes use of focal points
- Stands out from the competition
- Makes selection within a product line easy
- Has the right quality impression
- Reflects the image of the product
- Retains a visual connection with the past when redesigned

Package research must address each of these criteria. Effective packaging research must also be conducted with the appropriate target audience—the same target audience that is used when developing marketing strategy, planning TV commercials, and producing print ads.

GOOD PACKAGING RESEARCH

What is good packaging research? Let us begin with the premise that the packaging must be compatible with the long-term strategy and positioning of the brand. The packaging must close a sale in the store.

If we can define what the package should be, then certainly we should be able to design research to uncover whether the packaging is delivering in all the key areas.

Research should uncover shoppers' attitudes and feelings toward packaging. It should consider whether the shopper takes the time to pick the package up, consider it, and hopefully, buy it. We recognize that a designer can create a gimmick package that gets attention but does not close a sale. Conversely, a marketer can have a unique product with unique benefits, yet its packaging may be lost or buried on the cluttered store shelf. A strong package must be strong in many areas. It must have stopping power, it must generate readership and involvement with the labeling, and it must convey the imagery that helps close a sale.

Packaging for a well-established brand represents equity. Changing that package represents a risk. Packaging research must profile the equity the marketer has in his/her existing packaging and the risk he/she may encounter by making a change. Thus, packaging research must be evaluative. This statement means that it must profile to the marketer the strengths as well as the limitations of his/her package, and, at the same time, it must be diagnostic. It must generate information or fine-tune packaging designs, if fine tuning is necessary.

CONDUCTING RESEARCH

Three methods of conducting packaging research exist:

- Focus group sessions
- Mall intercept interviewing
- Test market auditing

Focus groups have several advantages as well as serious limitations. They alow you to see and hear consumer reaction. They also can provide valuable diagnostic input. However, we are all familiar with one dominant respondent totally controlling the focus group and biasing the responses of the other attendees. Many of you also have learned from attending focus groups that we often hear what we choose to hear. Often, four or five observers walk out of a focus group session with four or five different interpretations.

We noted earlier the importance of shelf visibility. It is impossible to measure the shelf prominence of a package in a focus group session. To ask a shopper whether he/she would or would not take notice of a package on the shelf is naive at best. What you gain from focus group sessions is an overall insight of "acceptable or unacceptable." If you are looking for serious negatives, then the focus group will begin to uncover problems. If you are looking for quantitative decision-making information, then the focus group session is not appropriate.

MALL INTERVIEWING

Mall intercept interviewing is widely used. In the shopping malls, we are generally able to reach target shoppers and interview them individually. The mall intercept interview is conducted on a one-to-one basis (shopper and interviewer). Accordingly, one strongly opinionated shopper cannot make or break a package, as so often occurs in the focus group session.

Areas that should be covered in the questionnaire include the following:

- Aesthetic appeal of the packaging
- Perceived product imagery conveyed by the packaging
- Believability of claims
- Effectiveness of the package in stimulating interest in trial
- Functionality of the packaging (easy to store, easy to pour, easy to hold)
- Confusion (if any) with labeling claims and instructions

Test market auditing, on face value, seems to be an effective way of documenting the impact of packaging in the store. In actuality, it is probably the least efficient method, because it is subject to so many uncontrollable variables, such as competitive pricing, positioning on the shelf, number of facings, and in-store sales. In addition, in-store auditing requires the packaging to be produced in finished form and in sufficient quantities to stock the shelves. Unfortunately, if your packaging is deficient, then the marketer will not find out until he/she has wasted a lot of time and money.

MEASURING SHELF IMPACT

Researchers have tried a variety of tools to measure shelf impact. Some have strengths and some have serious limitations. Let's consider the following:

- Tachistoscopic research
- Findability tests
- Recall questioning
- Eye tracking

Tachistoscopic Research. This method is simple to administer and provides a measure of quick recognition. The shopper is exposed to a series of scenes at brief time intervals (0.2, 0.5, 1 s) and asked to identify what he/she saw. The package that is identified most quickly is generally considered to be the best.

Unfortunately, many serious limitations exist to T-scope research. The most fundamental is the arbitrary time the researcher chooses to show each package. Does it really matter that package A communicates faster (in 0.2 s) than package B? Who determines whether 0.2 s (1/5 of a second) is a relevant timeframe?

An even greater drawback is the aspect of familiarity. As you might imagine, the familiar brands are generally those that are identified faster. Thus, when a marketer is considering a packaging modification, the T-scope may put his/her new design at a distinct disadvantage.

Findability Tests. Findability tests simply are those that ask a shopper to look at a cluttered in-store shelf scene and find specific products. Again, it is assumed that the package that can be found fastest is the most effective. We mentioned earlier that 80% of the purchases made in the supermarket are nonplanned. Thus, the findability tests that ask the shopper to locate a specific brand he/she is looking for is relevant only to those 20% who are going into the store looking for that brand. In actuality, the marketer's concern is with the other 80% who might make a nonplanned purchase. The 20% who plan to buy your product will find it, regardless of where it is located on the shelf.

Recall Questioning. A third commonly used measure of shelf impact is recall questioning. Recall, like T-scope research, is often influenced by familiarity. The well-known brands receive the higher recall scores. The new products or low-awareness brands suffer from a lack of previous exposure.

Eye-tracking Research. Eye-tracking research to document shelf prominence overcomes many of the limitations of the T-scope, findability tests, and recall. The eye tracker enables researchers to observe the shopper behavior, see what they see, see what they consider, and most importantly, observe what they ignore. Eye tracking is not hampered by the need to select an arbitrary viewing time. Researchers are able to observe what people do and how they shop the category, be it one second, one minute, or one hour. The eye tracking is not biased by familiarity.

One might even argue that the uniqueness of new brands would have an advantage, rather than a disadvantage, in drawing shopper attention. Many major marketers in the United States are using the eye tracking method to develop planograms and to pinpoint the pros and cons of additional shelf facings and horizontal and vertical layouts, and to uncover the competitive products that are strong on the shelf.

Some may argue that the eye-tracking viewing situation is artificial, and they are correct. However, the reality is that no one can duplicate the "real world," because it differs from store to store. How many times have we seen beautiful planograms never implemented in the supermarkets?

Often we refer to eye-level shelf placement as being optimal. But does eye level assume the shopper is 6 ft 2 in., 5 ft 10 in., or 4 ft 9 in.? With eye tracking, we can watch the shopper discriminate and, most importantly, see what he/she ignores. We know from eye tracking the packaging that is breaking through the visual shelf confusion.

LABEL READERSHIP

Label readership is another vital area that comprehensive packaging research must address. The designer has positioned key elements on the label to be seen and to be read. The three research tools commonly used to evaluate label readership are T-scope, recall, and eye tracking. The T-scope and recall measures suffer from the limitations described earlier that include: a fixed viewing time, contamination by familiarity and, in many instances, shopper guessing. The eye tracking shows how shoppers read the package labeling. It quantifies the advantages of top of the package versus bottom. It shows the shoppers' discriminating process and, most importantly, it allows the shopper to ponder and thoroughly examine a package if he/she chooses.

Researching packaging attributes can be accomplished only through a comprehensive and well-thought-out questionnaire. Unfortunately, many researchers attempt to answer these questions through paired comparisons, i.e., showing two potential packaging alternatives side by side. This method is a simple approach for forcing a winner, because one package will test better than the other. However, in actuality, neither may meet marketing objectives, and the end result may be the best of the worst.

DESIGNING RESEARCH

With all the above in mind, let us consider a few of my do's and don'ts when designing packaging research.

1. Do not show different packaging alternatives side by side to a shopper. The shopper will never see two executions for the same package side by side in the store. His/her frame of reference is competition. Thus, each packaging execution should be tested against competition.
2. Never control the amount of time you let a shopper look at a package. Remember, a designer is trying to develop a package that is a stopper, a package that is involving, a package that a shopper will want to take a second or third look at. When a researcher controls the amount of time he/she lets the shopper look at a package, he/she can no longer measure involvement. Speed of communication is not the key. Effective communication is far more relevant.
3. Do not live by hard-and-fast rules. Packaging designers have demonstrated time and time again that being different can pay great dividends at the cash register. Who would have guessed years ago that an orange-juice company could use the color black as their primary packaging identifier? Yet Minute Maid has done it and has done so with enormous success.
4. Do not rely on traditional advertising research recall scores. Many researchers have a tendency to rely on that magical thing called recall. Yet, recall per se is irrelevant when it comes to packaging research. A package is not on the shelf to be recalled. A package is there to be seen, considered, and sold.
5. Do not tie the package designer's hands. Respect the creativity and excellence of the packaging design industry. They are creative, innovative, insightful, and most of all, approaching their task with a marketing frame of reference. To advise a package designer that certain colors or shapes or designs will not work within a category is short-sighted. Use their talents, allow them free rein, and explore all creative opportunities before accepting or rejecting an innovation in packaging.
6. Do not forget to look at competition. The shopper considers competition prior to making his/her purchase decision. The marketer should do the same. All too often, a tendency exists to "follow the leader." If he/she is using red, then we should use red. If his/her packaging is horizontal, then ours should be the same. Keep in mind, breaking through clutter and getting attention is the first step to a sale.

Effective packaging is an integral part of the marketing mixture. An effective package catches the consumer's eye and entices the shopper to give the product a try. Successful packaging leads to successful businesses. Do not underestimate the influence of packaging. The package represents the product. The package is equity. A major change in a package is a risk. Research the risk thoroughly and logically. Remember that the package is a product to the consumer at the point of sale.

CONTAINER INTEGRITY REGULATION, USA

Yoon S. Song
Process Engineering Branch,
Office of Food Safety (OFS),
United States Food and Drug
Administration, Summit-Argo,
Illinois

INTRODUCTION

"Canning" is defined as the process of preserving food wherein a food and its containers are rendered commercially sterile by the application of heat alone or in combination with pH and/or water activity or other chemicals (1). For "canned" foods, the container must be constructed in such a way that *Clostridium botulinum*, other pathogens, and spoilage bacteria can't enter the container after the thermal process. This is called container integrity. It is important to note that foods packaged in materials other than metal cans are also considered "canned" if the food undergoes the canning preservation process. Thus, today a canned food can be packaged in a number of other types of container, such as glass jars, paperboard cans, and plastics that can be formed into anything from pouches to soup bowls to serving trays. For traditional glass and metal canning, the food is placed in an airtight container and heated to destroy microorganisms. Foods with a naturally high acid content such as tomatoes, citrus juices, pears, and other fruits don't support the growth of spore-forming food poisoning bacteria. Therefore, foods that have a high acid content, do not receive as extreme a heat treatment as do low-acid foods. They are heated just sufficiently enough to destroy both pathogenic and spoilage bacteria, yeasts, and molds. Canners and food safety regulators are most concerned about foods with low acid content, such as mushrooms, green beans, corn, and meats, because the deadly *C. botulinum*, which causes botulism poisoning, produces a toxin in these foods during growth and their spores are highly heat-resistant.

The issue of container integrity has been recognized as critical for acid and low-acid foods since the canning industry, which dates back to the early 1900s, has experienced botulism and spoilage outbreaks related to commercial thermal processes and container closure operations. In particular, several incidents of botulism in the 1970s led to increased observation by the FDA and great awareness of quality control by container manufacturers and food processors to produce as perfect a container as possible under commercial operating conditions. According to many investigation reports, major causes for microbial spoilage in canned foods can generally be attributed to (a) underprocessing and (b) post-process contamination during container cooling process, storage, and distribution. Richardson (2) reported that microbial spoilage in Australian canned foods occurring from 1955 to 1968 resulted from underprocessing (46 cases) and postprocess contamination (64 cases). Davidson et al. (3) investigated 790 swollen cans collected from the U.S. local supermarkets over a two-year period. He reported that types and incidences of the microorganisms recovered were 7.9% pure cultures of spore-forming organisms traditionally associated with underprocessing and 91.6% typical postprocess leaker spoilage microorganisms. From a study of 154 incidents of food poisoning associated with postprocess contamination between 1921 and 1979 which occurred in Great Britan and Canada, Stersky et al. (4) also concluded that channel leaks during the cooling process were one of the major defects leading to bacterial spoilage. Therefore, thermal processes and sealing operations applied in commercial practice for canned foods must be properly monitored and regulated to prevent spoilage outbreaks and avoid potential health hazards.

REGULATORY OVERVIEW ON CONTAINER INTEGRITY

Container materials manufactured for use in contact with food in the United States, whether for home or commercial use, fall under the jurisdiction of the Federal Food, Drug, and Cosmetic Act (FFDCA, Title 21 United States Code 348) whenever they are intended to be marketed in interstate commerce. In general, there are two federal agencies that regulate canned food and container in the United States: the Food and Drug Administration (FDA) of the U.S. Department of Health and Human Services (DHHS) and the Food Safety Inspection Service (FSIS) of the U.S. Department of Agriculture (USDA). In general, the FSIS regulates red meat and poultry, and the FDA regulates all the rest including food with less than 3% raw or 2% cooked meat. The FDA regulations address container integrity in Part 113 (*Thermally Processed Low-Acid Food Packaged in Hermetically Sealed Containers*) and Part 114 (*Acidified Foods*) of Title 21 Code of Federal Regulations (CFR) (Government Printing Office, Pittsburgh, 2005). The FSIS has similar regulations covering low-acid canned meats and poultry as well as acidified meat and poultry in Part 318 (*USDA Canning Regulations*) of Title 9 CFR (5).

Both FDA and USDA-FSIS regulations are specific for thermally processed foods packaged in hermetically sealed containers. A hermetically sealed container is defined as a container that is designed and intended to be secure against the entry of microorganisms and thereby to maintain the commercial sterility of its contents after processing (Part 113.3 of Title 21 CFR). In particular, the regulations contain provisions (Part 113.10 and Part 114.10 of Title 21 CFR; Part 318.310 of 9 CFR) for training of personnel who supervise critical areas in thermal processing and packaging of canned foods. This implies that operators of thermal processing systems and container closure technicians must be under the direct supervision of persons who have successfully completed certified courses of study in canning technology. Currently, the Better Process Control Schools (BPCS) sponsored by the FDA provides an approved course of instruction.

RIGID CONTAINER REGULATIONS

The rigid container is defined as “a container that is neither affected by the enclosed contents nor deformed by external pressure up to 10 psig” (Part 318.300 (j) of Title 9 CFR). Examination of metal containers for defects and can double-seam measurements described in Part 113.60 (a) (1) of 21 CFR and in Part 318.301 (b) of 9 CFR are very specific, describing (i) the types of defects to look for (cutover or sharpness, skidding or deadheading, false seam, droop at the crossover or lap, and condition of inside of counter sink wall for evidence of broken chuck), (ii) the specific double-seam parameters to be examined (cover hook, body hook, tightness or wrinkle, thickness, width, overlap, and countersink), and (iii) and the specific measuring methods to be used (micrometer method, gauge method, and scope or projection method). For glass containers, the only specific procedure discussed is the cold water vacuum test. FDA regulations state that *it shall be done before actual filling operations and that the result shall be recorded*. Detailed procedures to conduct integrity tests for metal and glass containers have been well described in guidance documents, such as FDA’s Bacteriological Analytical Manual (BAM) (6, 7) and Food Processors Institute (FPI) manual (1).

Part 113.60 (a) of Title 21 CFR and Part 318.301 (b) of 9 CFR also require that regular observations shall be maintained during production runs for gross closure defects and any such defects shall be recorded along with the corrective action taken; that at intervals of sufficient frequency (at least once every 30 min recommended) a qualified person shall visually examine the top seam of a can randomly selected from each seaming head or the closure of any other type of container being used and shall record the observations made; and that additional visual closure inspections shall be made at the beginning of production, immediately following a closing machine jam or after machine adjustments. In addition to visual examinations, both FDA and USDA require teardown examinations to be performed and recorded by qualified individuals. Furthermore, regulations recommend that sample containers be tested at intervals not to exceed 4 h.

SEMIRIGID AND FLEXIBLE CONTAINER REGULATIONS

The semirigid and flexible container is one that is not affected by the enclosed contents but is deformed by external pressure of 10 psig or less (Part 318.300 (j) of Title 9 CFR). Unlike regulations for all rigid containers, the regulations for flexible and semirigid plastic packages are not clearly specified in CFRs other than the regular observations. The reason for this is that when these regulations were written, there was plenty of information concerning the procedures for testing metal cans and glass jars but very little for plastic containers. For instance, FDA regulations in Part 113.60 (a) (3) of 21 CFR only state that *for closures other than double seams and glass containers, appropriate inspections shall be conducted and tests be made by qualified personnel at intervals of sufficient frequency to ensure proper closure machine performance and consistently reliable hermetic seal production. Records of tests shall be maintained.*

The USDA-FSIS regulations described in Part 381.301 (d) (1) and Part 318.309 (d) of 9 CFR include more specific details on the evaluation of semirigid and flexible containers, such as visual test, physical test, and incubation test. The regulations require that heat seals and the entire container be visually inspected before and after thermal processing operation by a trained closure technician with sufficient frequency and that corrective actions be promptly recorded; that physical test be performed after thermal processing operation by a trained closure technician at sufficient frequency (at least once every 2 h recommended) and that corrective actions be promptly recorded; and that at least one finish container per batch be incubated for not less than 10 days at 95 ± 5°F. In addition, the USDA-FSIS requires that empty containers, closures, and container rollstock be inspected, stored, handled, and conveyed in a manner to ensure they are clean and free of defects that may affect the product or package integrity.

Processors who pack product in flexible pouches under military contract are also required to comply with specific U.S. military contract requirements (8, 9). A 100% visual inspection of the seals on every pouch produced may be required both before and after thermal processing. Other requirements are (a) destructive tests in which sample pouches must withstand internal pressure at 20 psig for 30 s (burst test), (b) residual gas tests ($<$10 mL), and (c) incubation tests after thermal processing for not less than 10 days at 80–95°F.

In response to requests by industry to evaluate containers and closures, the Food Products Association (FPA, the former NFPA), in joint efforts with FDA, USDA, and industry, developed guidance documents that (a) provided a classification of visual exterior defects of flexible and semirigid containers, (b) established the relative hazard of each defect to public health, and (c) defined sampling rates and action levels for the various defects in flexible and semirigid containers (10, 11). In addition, FDA published the *Bacteriological Analytical Manual* (BAM) that contains a chapter entitled, “Examination of Containers for Integrity” (12). This chapter describes procedures for the examination of paperboard packages, flexible pouches, plastic cups and trays with flexible lids, and plastic cans with double-seamed metal ends. Test procedures included are air leak testing, bio-testing, burst testing, chemical itching, compression testing, distribution test, dye penetration, electester, electrolytic, gas leak detection, incubation, light, machine vision, proximity tester, seam scope projection, sound, tensile testing, vacuum testing, and visual inspection. The manual, however, doesn’t reflect current advances in inspection techniques for container integrity.

SPECIAL CONSIDERATIONS FOR EMERGING INSPECTION TECHNOLOGIES

Inspection techniques for detecting package defects in the food industry have been moving toward nondestructive and online methods that test all packages. The applicability of these emerging inspection techniques to various food containers with different types and compositions has become of great interest to the industry. In spite of rapid advances in technologies, however, severe limitations of each inspection technique still have become apparent. This reality, coupled with the increased use of flexible and semirigid plastic packaging for acid and low-acid foods, made it necessary for the FDA to continue to investigate the integrity of plastic packages.

In the United States, the National Center for Food Safety and Technology (NCFST) in affiliation with the FDA has evaluated and reported several state-of-the-art techniques; these include pressure differentials, magnetic resonance imaging, ultrasonic immersion and airborne imaging, high-voltage leak detection, and thermal imaging techniques. However, there is still not sufficient information available on capabilities and limitations of the emerging techniques, in detecting various package defects and tampering, over traditional visual and destructive offline inspection methods. It is because validation of each technique is container-specific, and the detection sensitivity and online applicability of a technique depend upon targeting defect types, container shapes, and packaging materials. These evaluation studies should continue and will ultimately result in enhancing efficiency in removing different types of defective packages, reducing the risk of product recalls and subsequent outbreaks, and improving the overall safety of the food supply.

CONCLUSIONS

In summary, FDA’s major concern regarding container integrity centers on the postprocess contamination of acidified and low-acid canned foods. Requirements on all metal double-seamed cans are clearly stated in Codes of Federal Regulations, but the regulations for heat-sealed flexible and semirigid plastic packages are not clearly specified. It generally means that integrity tests for flexible and semirigid containers developed by industry, in the case of pouches, are reviewed by FDA, USDA, and/or the army for applicability and soundness. If acceptable, the tests are expected to be used. For many years, the emphasis on container integrity had been on rigid containers such as double-seamed metal cans because the container integrity issue started with processing of the metal cans, and metal cans are still the dominant container in the United States. However, FDA and USDA are just as concerned with the integrity of hermetically sealed, nonmetal containers and are monitoring them as closely as metal ones.

BIBLIOGRAPHY

1. National Food Processor's Association, in A. Gavin and L. M. Weddig, eds., *Canned Foods: Principles of Thermal Process Control, Acidification and Container Closure Evaluation*, The Food Processors Institute, Washington, DC, 1995.
2. K. C. Richardson, *Food Technol. Austral.* **24**, 106–107 (1972).
3. P. M. Davidson, I. J. Pflug, and G. M. Smith, *J. Food Protect.* **44**, 686–691 (1981).
4. A. Stersky, E. Todd, and H. Pivnick, *J. Food Protect.* **43**, 465–476 (1980).
5. Government Printing Office (GPO), Superintendent of Documents, New Orders, P.O. Box 371954, Pittsburgh, PA 15250-7954. Phone (202) 512-1800, Fax (202) 512-2250 (http://www.access.gpo.gov/nara/cfr/index.html), 2007.
6. R. C. Lin, P. H. King, and M. R. Johnston in *FDA Bacteriological Analytical Manual (BAM)*, AOAC International, Arlington, Virginia, 2001, Chapter 22A.
7. R. C. Lin, P. H. King, and M. R. Johnston, "Examination of Glass Containers for Integrity" in *FDA Bacteriological Analytical Manual (BAM)*, AOAC International, Arlington, Virginia, 2001, Chapter 22B.
8. U.S. Military Specification, MIL-PRF47073D, Packaging and Thermal Processing of Foods in Flexible Pouches, January 6, 1992.
9. U.S. Military Specification, MIL-PRF47073E, Packaging and Thermal Processing of Foods in Flexible Pouches, November 30, 1995.
10. National Food Processor's Association, *Classification of Visible Exterior Can Defects*, NFPA/The Flexible Package Integrity Committee, AOAC International, Arlington, Virginia, 1984.
11. National Food Processor's Association, *Flexible Package Integrity Bulletin*, NFPA/The Flexible Package Integrity Committee, NFPA Bulletin 41-L, Washington, DC, 1989.
12. G. W. Arndt, "Examination of Containers for Integrity" in *FDA Bacteriological Analytical Manual (BAM)*, Chapter 22C, OAC International, Arlington, Virginia, 1992.

CONTROLLED RELEASE PACKAGING

KIT L. YAM
Department of Food Science,
Rutgers University, New
Brunswick, New Jersey

Controlled release packaging (CRP) is a technology for producing a new generation of packaging materials and final packages that can release beneficial active compounds such as antimicrobials, antioxidants, enzymes, flavors, nutraceuticals, anti-browning agents, and bioactive compounds in a controlled manner to enhance food quality and safety as well as extend shelf life. CRP may be considered as a form of active packaging (see Active packaging), in which the package is used as a delivery system to release active compounds to favorably modify the internal environment of the package. Currently, this technology is being developed in the laboratory and the industry, but it has the potential for commercial application in the future.

BASIC CONCEPT

Figure 1 compares the traditional method and CRP for adding active compounds to a food product. The traditional method is to add the active compounds directly into the initial food formulation as shown in Figure 1(a); however, once these compounds are consumed in reaction, protection ceases and food quality degradation may increase rapidly. Increasing the amounts of these compounds is sometimes not feasible as the levels in the food formulation are regulated by the U.S. Food and Drug Administration (FDA).

CRP can overcome this limitation by continuously replenishing the active compound via controlled release from the package, which is necessary for achieving long-term stability of the food. Different methods are available to incorporate active compounds into the package; for example, as shown in Figure 1(b), active compounds are incorporated into the food-contact layer of a package that is designed to allow the slow release and replenishment of active compounds to maintain an effective level during the shelf life of the product.

The benefits of controlled release of antimicrobials and antioxidant to retard microbial growth and lipid oxidation have been demonstrated in the laboratory. In some situations, the best results may be achieved by a combination of adding a portion of these compounds directly into the food formulation and then replenishing the remaining portion through CRP.

ACTIVE COMPOUNDS

Currently, the most commonly used active compounds for CRP research are antimicrobial and antioxidants. For example, antimicrobials include nisin, potassium sorbate, lysozyme, oregano, and garlic as well as antioxidants that include tocopherols, sesamol, BHT, and quercetin. The selection of active compounds depends on the application, activity of the active compounds, safety considerations, ability of the active compounds to be incorporated into the package, and cost. Natural active compounds are often preferred.

The volatility of active compound is also an important consideration. The applications of nonvolatile compounds are limited to products that have direct contact with the package, because direct contact is necessary for the migration of these compounds to the product. However, volatile compounds may be used for products that do not have direct contact with the package, because after being released from the package, these compounds may vaporize to the headspace and then condense onto the product.

ABILITY TO CONTROL RELEASE

A technical challenge is to achieve the ability of "controlled release." For example, how does one produce a CRP

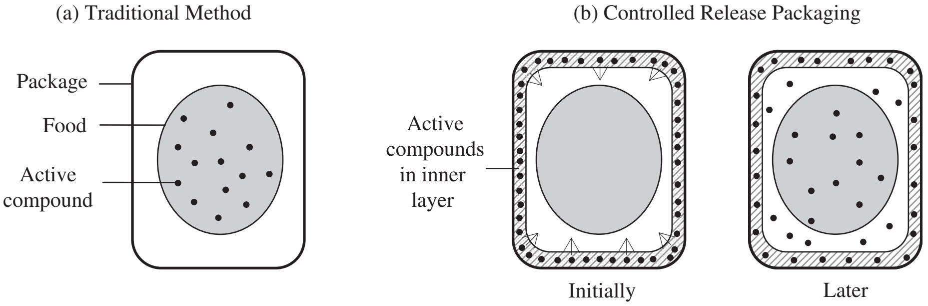

Figure 1. Traditional method versus controlled release packaging.

film that has a desired release property? In theory, it may be achieved by manipulating several factors that include the active compound or compounds to incorporate into the film, the polymer or polymers to make the film, and the film making processing method and conditions [1]. Those factors, along with the resulting structure or morphology of the film, will affect the diffusion of active compound in the film and the release of active compound from the film.

Another technical challenge is the determination of what release rate is suitable for a particular product. This decision requires an understanding of the stability of the product. For example, to reduce microbial growth or lipid oxidation of a food product, it is necessary to study the microbial and oxidative kinetics of the food product exposed to the condition caused by the release of active compound. This condition includes the concentration of active compound surrounding the product (which changes with time because the release of active compound from the film decreases with time) and temperature. The aim of the study is to determine the optimum condition and the target release rate required of the film.

Uncontrolled release may result in wastage of active compound. For example, lipid oxidation reactions have an inherent induction period in which the primary oxidation product remains constant. During this period, dumping antioxidant is not necessary and may also lead to pro-oxidation, and thus, the release of antioxidant should be kept at a low rate.

POTENTIAL APPLICATIONS

This technology is particularly useful for controlling food degradation reactions that are continuous and increase exponentially, such as microbial growth and lipid oxidation, because constant replenishment of inhibitory substances prevents runaway deterioration of safety and quality. Examples of potential applications are processed food products that require long-term inhibition of lipid oxidation and perishable food products such as fresh meat, which require short-term or intermediate-term inhibition of microorganisms.

REFERENCES

1. A. Lacoste, K. M. Schaich, D. Zumbrunnen, and K. L. Yam, Advancing controlled release packaging through smart blending. *Packaging Tech Sci* **18**, 77–87 (2005).

CONVEYING

Paul J. Zepf
Zarpac, Inc.—Engineering,
Oakville, Ontario, Canada

DEFINITION

The Conveyor Equipment Manufacturers Association (CEMA) of the United States defines a conveyor as a horizontal, inclined, or vertical device for moving or transporting bulk materials (cereals, aggregate, powders, etc.) or objects (such as bottles, cases, cartons, products, etc.) in a path predetermined by the design of the device and having points of loading and discharge fixed, or selective; included are skip hoists, vertical tractors and trailers, tiering machines (truck type), cranes, monorail cranes, hoists, power and hand shovels, power scoops, bucket drag lines, any conveyor designed to carry people, and highway or rail vehicles.

Basically, a conveyor is made up of one or more sections that transfers (via an intermittent or continuous media) such items as inputs (bottles, bags, caps, cartons, product, etc), packages, cases, or pallets from one location or position to another. Each section may be driven independently at varying speeds or employ gravity as a method of transfer. The *conveyor speed* is the surface speed of the conveyor in feet per minute (fpm) or meters per minute (mpm), while “line speed” or more properly actual run speed is the transfer rate, given in pounds or kilograms per minute, parts per minute (ppm), or containers per hour (cph).

Two or more rows of containers carried side by side without internal divider rails on the same conveyor chain bed are collectively referred to as *mass flow*, while carrying only a single row is referred to as *single-lane* or *in-line* flow. For mass flow, the number of adjacent rows is referred to as the *line width* and is given as an integer, while *conveyor width* refers to the width of a section of moving conveyor element expressed in inches or meters. Pitch is defined as the center-to-center spacing of containers, given in inches or meters. The pitch in the direction of motion is referred to as the longitudinal pitch or travel distance, while the spacing across the width of the conveyor is the transverse pitch or sideways distance. The full width of the conveyor is called the “conveyor frame width.”

The integration of all packaging machinery with their conveyors is critical to produce a seamless transfer and assembly system that results in the consistent regular flowing movement of inputs, packages, or cases that enter into the packaging production process at specific points and are assembled, identified, verified, and distributed to fulfill customer needs. Integration of conveyors to conveyors or conveyors to packaging machinery should follow the principles as stated below in order for the packaging line to be successful.

Integration of conveyors with machinery should consider the following factors:

1. Selection and design of proper conveyor transfer type or types for the system to fulfill needs.
2. Design and installation of (a) *guiderails* and (b) *sensing and handling control components*.
3. Speeds, feeds, dynamics, and loads to achieve the required results.
4. Compatibility of *interconnecting machinery* and other conveyor types.
5. Installation and maintenance of conveyors and machinery.

There are many other components that can be attached to or are part of a conveyor system that perform special functions such as:

1. Quality inspection (vision, dud, low/hhigh/no fill, no/cocked cap, no/cocked label, count, etc.).
2. Coolers, freezers, conditioning ovens, cooker ovens.
3. All types of coding units (inkjet, laser, impression, stencil).
4. Staging or allowances for manual operations.
5. Hard and soft reject stations for off loading out of spec materials or sample selection.
6. In-process storage (buffers or sometimes called accumulators) areas.
7. Combiners, dividers, turners, orientors, fallen bottle removal, etc.

All of these devices require some form of conveyor or transfer equipment as the main critical element to manipulate or identify or test the products and/or inputs. Conveyors are therefore an integral part of the packaging process and are elements or machines that have their own reliability and maintenance issues.

DESIGN AND INSTALLATION OF CONVEYOR SYSTEMS

Traditionally, conveying systems were designed without paying much attention to drive dynamics, the forces imposed on the conveyor and product, or the effects of these forces on container stability. Design criteria were based on the average running-speed requirements and mechanical longevity. In fact, typical design formulas considered only rough estimates of the loading (forces) combined with factors that represent the number of startups and the amount of product slippage. Most present chain manufacturers are improving the nature and extent of engineering for their products. Chain manufacturers such as Rexnord, UniChain, and MCC have technical engineering data and software programs available to assist in designing effective conveying systems related to their products. Also, engineering services companies have developed their own specialized software programs for line design and conveyor systems integration.

In recent years, increasing demands, economics, and environmental concerns have placed enormous pressure on production facilities to increase operating speeds, reduce wastage, reduce rework, and cut manpower requirements. These changes have pushed traditional design methods to the limit of their effectiveness. In addition, the aesthetic appeal of complex input shapes (bottles, products, cartons, cases, etc.), the use of lightweight materials, the variety and nature of materials themselves, and input thin walling to reduce material weight (in film, corrugate, paper, plastic bottles and glass bottles) have resulted in a new generation of stability and control problems associated with the transport and manipulation of materials and containers by conveyor.

With current conveyor technology and the demand for high-productivity packaging lines, simple conveyors must be designed, built, and installed to run at a run utilization or availability of over 99.5% per month. Conveyors with attachments must be designed, built, and installed to run at a run utilization of over 99.0% per month (buffers, combiners, dividers, reject mechanisms, etc.).

For most cases, conveyors should be designed and run with minimum backpressures on the inputs or products in order to minimize part damage, maximize control, and maintain product conformity for optimum quality.

This article only *summarizes* the concerns and methods of container or input transport by conveyors.

CONVEYING SYSTEMS: OVERVIEW

There are many types of conveying systems in common use today. These conveyor designs are listed and described in the following pages.

Slat-Top Chain (Also Called Table top) Design (see Figure 1)

This style of conveyor comes in the following designs and materials (see Figure 1):

1. Magnetic hinged-joint chain conveyors or magnetic slat-top chains (also called tabletop) chain conveyors.
2. Steel or stainless-steel hinged-joint chain conveyors or steel or stainless-steel slat-top chains (also called tabletop) chain conveyors.
3. Plastic hinged-joint chain conveyors or plastic slat-top chains (also called tabletop or flat-top) chain conveyors.
4. Magnetic slat-top chains (also called tabletop or flat-top) roller chain conveyors.

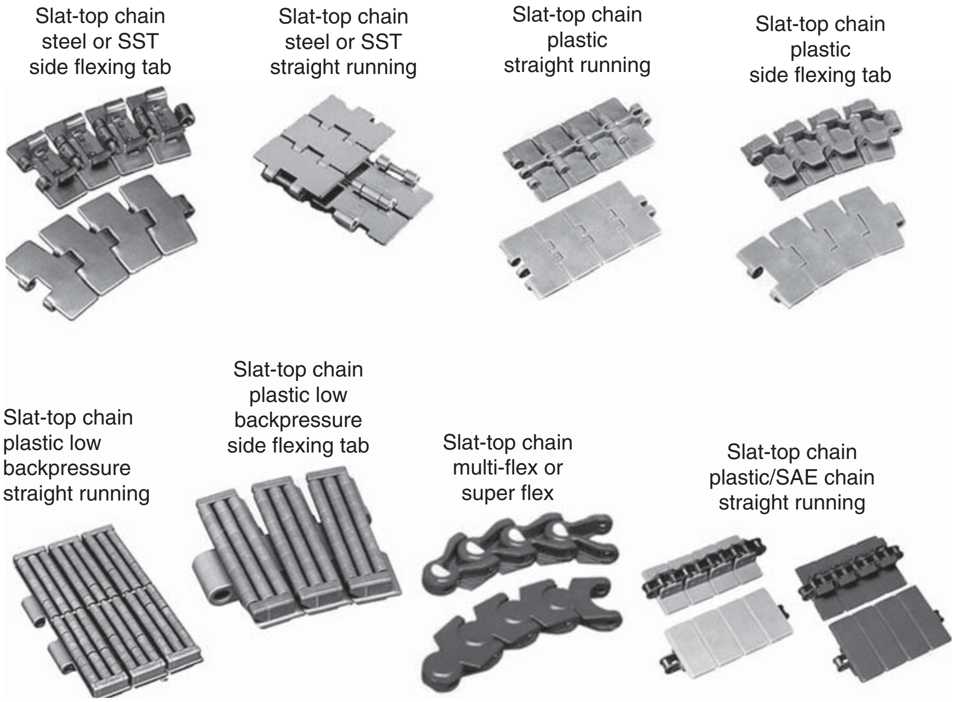

Figure 1. Types of slat-type or table-top chains.

5. Steel or stainless slat-top chains (also called table-top or flat-top) roller chain conveyors using SAE roller chain underneath to drive the slat top chain.
6. Plastic-top roller chain conveyors for low backpressure using SAE roller chain underneath to drive the slat-top chain.
7. Stainless-steel multiflex chain conveyors.
8. Plastic multiplex or super flex chain conveyors for small-curve-radius requirements.
9. Side-flex hinged chain conveyors or side-flex slat-top chains (also called tabletop or flat-top) chain conveyors.
10. Flex link™ hinged conveyors or flex link slat-top chains (also called tabletop or flat-top) chain conveyors.
11. Steel or stainless steel mesh belt chain that can have up to 20 ft of width.
12. Plastic or ceramic modular belts that can be mesh or mat style and widths varying from 12 in. (300 mm) to 120 in. (3000 mm).

Rex™ LBP Trademark of the Rexnord Company.
Flex link™ Trademark of SKF Flexlink conveyor systems.

Mesh-Top or Open-Top Modular Belt Chain Design (See Figure 2)

This consists of

- Metal (steel or stainless steel) straight mesh conveyors
- Metal (steel or stainless steel) curved mesh conveyors
- Plastic straight mesh conveyors

Mesh chains, like mat-top chains, form wide-running conveyors. They are constructed from steel or stainless-steel wire that is formed into interlocking loops or injection-molded plastic wide links connected together by stainless-steel or plastic long pins (pins are as wide as the chain). Mesh chains are manufactured in various mesh patterns. They are designed for slow mass transport of products such as bakery items, solid food products, small metal products, and some confectionary items where drainage or cooling is required. However, they are usually designed for the mass transport of stable inputs needing no orientation requirements. The metal mesh chains are excellent to use in hot and some corrosive environments. Mesh conveyors are connected together usually via a butt transfer or overlap in-line transfer. Curved or side-flexing configurations are possible.

New plastics and designs have now resulted in plastic mesh-type chains, giving low friction, reduced weight and torque requirements, wet capability, excellent drainage or fall through, better economy, and effectiveness for products where steel or stainless mesh or mats either cannot be used or are not economical. Mesh-type conveyors generally have less surface area in contact with the product due to the large percentage of holes or open space in the chain. Mat chains usually have more surface area in contact with the product.

Mat-Top™ or Modular Belt Chain Design (See Figure 2)

This consists of

- Mat metal (steel or stainless steel) conveyors
- Mat-type plastic conveyors (see Figure 2).

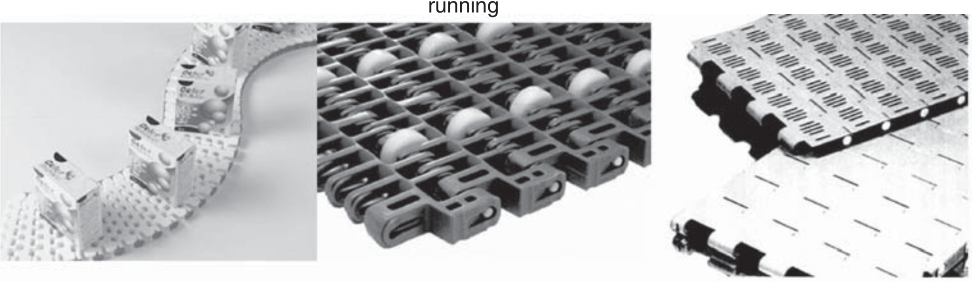

Plastic modular belts side flexing type

Plastic modular belts low friction back mesh type pressure straight running

Plastic modular belts mat type straight running

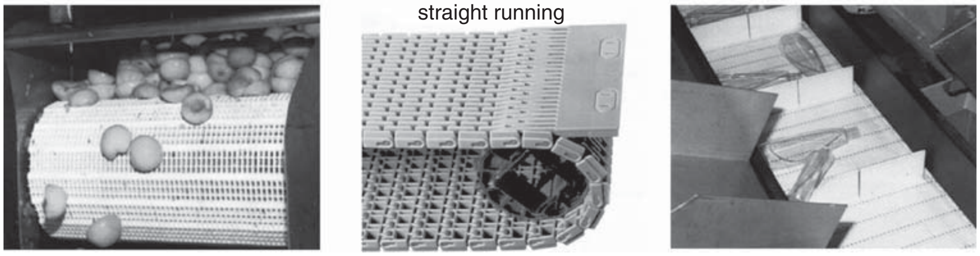

Plastic modular belts mesh type straight running

Plastic modular belts mesh type w/comb transfer plate straight running

Plastic modular belts mat type w/flights straight running

Figure 2. Types of plastic modular belts.

Mat-top™ (Trademark of the Rexnord Company) chain, like belts, are wide-running conveyors. However, they are usually designed for the mass transport of stable inputs needing no orientation requirements. The chain is constructed using one wide link per longitudinal pitch as opposed to many adjacent narrow links. The wide links are connected by stainless-steel or plastic long pins so that two adjacent links resemble a "panel hinge" or "piano hinge." The links may have slots or holes for drainage. Mat conveyors are connected together usually via a butt transfer or overlap in-line transfer. Curved or side-flexing configurations are possible. These conveyors, although having flat running surfaces, are not considered flat-top chains.

New plastics and designs have now resulted in plastic mat-type chains, giving lower friction, reduced weight and torque requirements, wet capability, better economy, and effectiveness for products where steel or stainless-steel mats cannot be used or are not economical.

These conveyor types are composed of individually hinge-connected flat slats that form a smooth surface or plastic flat slats that are connected to a standard roller chain, usually number 60 chain. They function at any level, including substantial elevations, although the most common usage height is 36–42 in. (910–1070 mm) from the floor and usually transferring product in a horizontal plane.

Slat-Top Chain (Also Called Table top) Conveyors (See Figures 3 and 4)

These are sometimes called *flat-top conveyors*, can run at high speeds (generally up to 300 fpm or 100 mpm) and are widely used, for example, in the filling and packaging of bottles and cans, where production speed requirements constantly push the chain to their design limits. These chains are also used for many industrial conveying requirements, such as the manufacture and packaging of bearings, small mechanical components, blow-molded parts, and injection-molded parts. They can even interface effectively with robotic systems used in manufacturing and packaging. Slat-top chain conveyors use plastic or metal or a combination of the two materials in their construction (excluding the link pins, which usually are stainless-steel or ferritic tempered steel).

Plastic chain is usually made of predominantly three materials:

1. Acetal or delrin base chain for frictional requirements needing an approximate coefficient of friction 0.25–0.3 dry and 0.2–0.25 lubricated.
2. Low friction (LF) (about 18% Teflon) chain for frictional requirements needing an approximate coefficient of friction 0.15–0.2 dry and 0.1–0.15 lubricated.
3. High-performance (HP) (about 26% Teflon) chain for frictional requirements needing an approximate coefficient of friction 0.1–0.15 dry and 0.05–0.1 lubricated.

The proper plastic slat-top chain, which is dependent on friction, temperature, and speed requirements, is normally used for conveying plastic containers and other nonabrasive products that have a degree of stability.

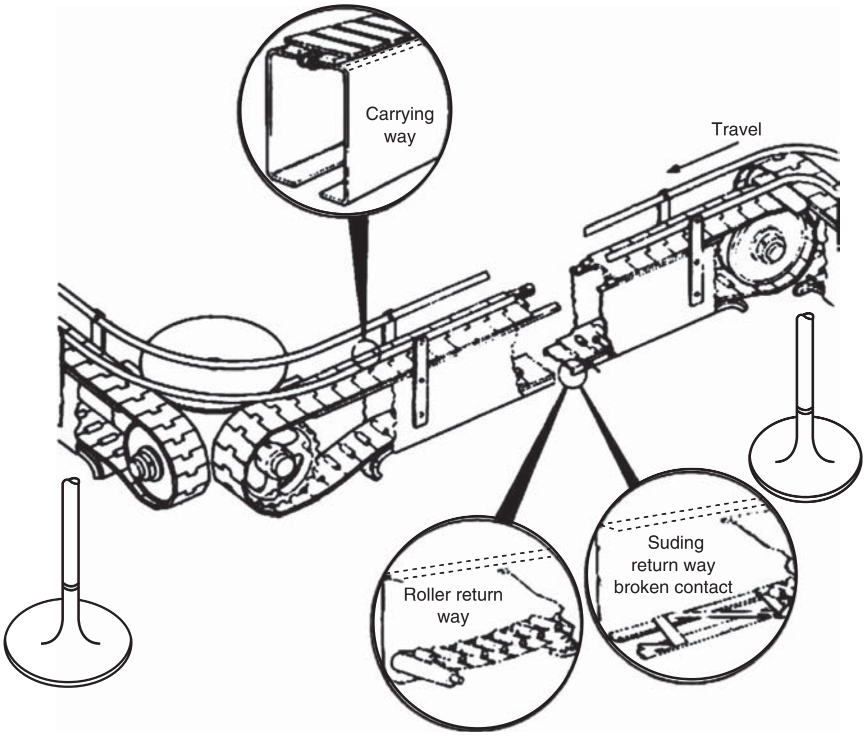

Figure 3. Typical straight-running slat-top-type conveyor design.

Lubrication of these chain types can take the form of a spray mist on the idle top side of the chain. The spray mist consists of soft water mixed with minute amounts of special liquid soaps specially formulated for either plastic or metal slat top chains.

Glass containers, steel cans, and abrasive-type products are generally conveyed on carbon or stainless-steel slat-top chains. Sometimes plastic slat-top chains can be used as an economy measure or noise reduction measure where its application is suitable.

Hinged slat-top chains or roller-driven slat top chains come in the following standard widths to fit the needs of the packaging process. All widths are narrow as compared to mat or mesh plastic modular chain. Standard widths are $3\frac{1}{4}, 4\frac{1}{2}$, 6 (not common) 7.5, 10, or 12 in. (89, 108, 152, 190, 254, and 305 mm) wide, and containers are carried at medium to high speed in single lane or mass flow. Speeds over 300 ft (90 m) per minute may be possible for specific chain materials and under certain conditions. Generally, speeds of under 300 fpm are for normal applications.

The chain or hinge runs in a “channel,” which is specially designed to support the chain or hinge on both sides and can carry both the loaded and return sections. The channel is fitted with wear strips to reduce friction and prevent long-term damage to the channel and slat top chains. The channel is designed to allow the hinged section to pull through on top, feed through the drive and idle sprockets, and return below the channel smoothly without hesitation. There is always a catenary or return chain slack at the drive end, and its profile affects conveyor torque.

Slat-top chains may be either straight-running or side-flexing. Straight-running chain is simple in design but requires special devices such as turntables or dead plates in order to move product through any type of turn. A side-flexing conveyor is more expensive but provides smooth, continuous turns and transfer of products. Side-flexing gives more control and flexibility than straight-running slat-top chains.

There is a fundamental problem with the use of side-flexing chain in that side forces are imposed on the chain, which can cause it to twist and lift out of the channel. There are four common designs of side-flexing chain: tab, wedge, magnetic, and super flex (or multi-flex).

Tab. Tab chain uses short lips on the underside of the links to hold the chain in the channel and keep it from lifting. Unfortunately, the tabs cause increased side loading and a longer maintenance time for chain repair or replacement.

Wedge. The body of the links are tapered, decreasing in width near the top surface of the chain. The channel has a mating taper that prevents the chain from twisting or lifting. Unfortunately, the wedge causes increased side loading but less than tabs and a longer maintenance time for chain repair or replacement.

Magnetic. Magnetic chain has permanent magnets located in either the chain or the channel. The magnetic attraction between the channel and the chain holds the chain into the channel. Plastic chain can be used in plastic channels with magnetic impregnated materials only if the link pins are of a ferrite material.

Super flex (Sometimes Called Multi-flex). Very tight radius side-flexing chain that can usually be easily lifted out for cleaning and inspection.

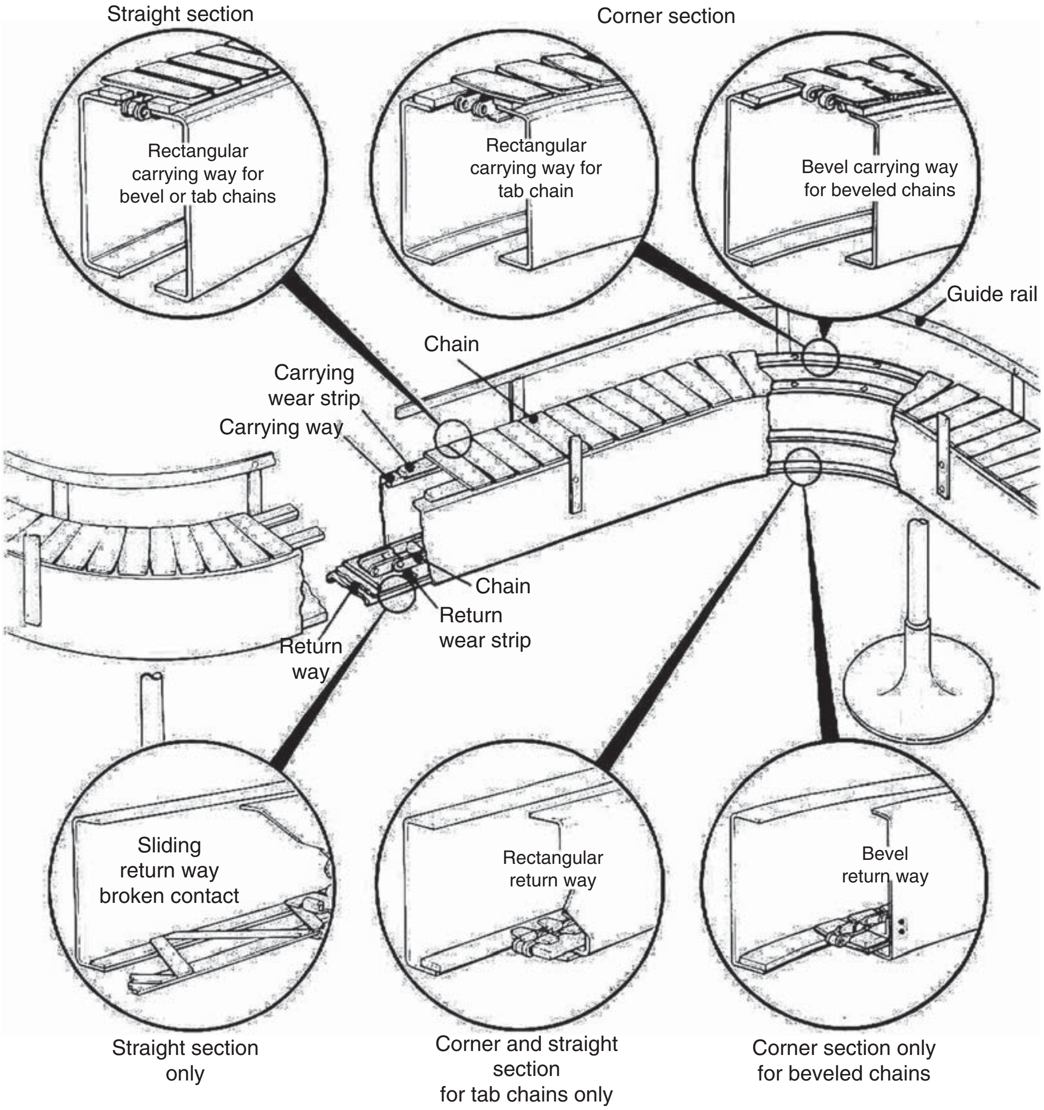

Figure 4. Typical Side-Flexing Slat-Top-Type Conveyor design.

Cloth, Rubber, Synthetic, Reinforced, or Composite Belt Designs (See Figure 5)

This consists of

- Troughed belt conveyor for bulk granular transfers
- Spiral belt conveyors
- Flat straight belt conveyors
- Magnetic flat belt conveyors
- Retracking belt conveyors
- Magnetic spiral belt conveyors
- Flighted belt conveyors

A *belt conveyor* is defined as an endless fabric, rubber, plastic, leather, or metal belt operating over a suitable drive, tail end, and bend terminals. Most modern belts are reinforced with steel or Kevlar cords to increase strength and performance. In the case of handling bulk materials, packages, or objects placed directly on the belt, the belt is supported by and operates over belt idlers or a slider bed. Belt conveyors use a belt as a carrying medium for the controlled movement of a great variety of regular and irregular-shaped commodities, ranging from light and fragile to heavy and rugged, to granular, and to solid unit loads. The belt conveyor can be level or angled up or down. The angle of transfer is limited mainly by the stability of the commodity and strength of the product being moved. Belt conveyors are connected together usually via a butt transfer, or one belt is above or below the other and the product drops onto the downstream belt conveyor.

A belt conveyor consists of a flat belt wrapped around two end rollers (one powered, one idle) and supported along its length on both the loaded and return sections. The “loaded section” is the portion of the belt that carries

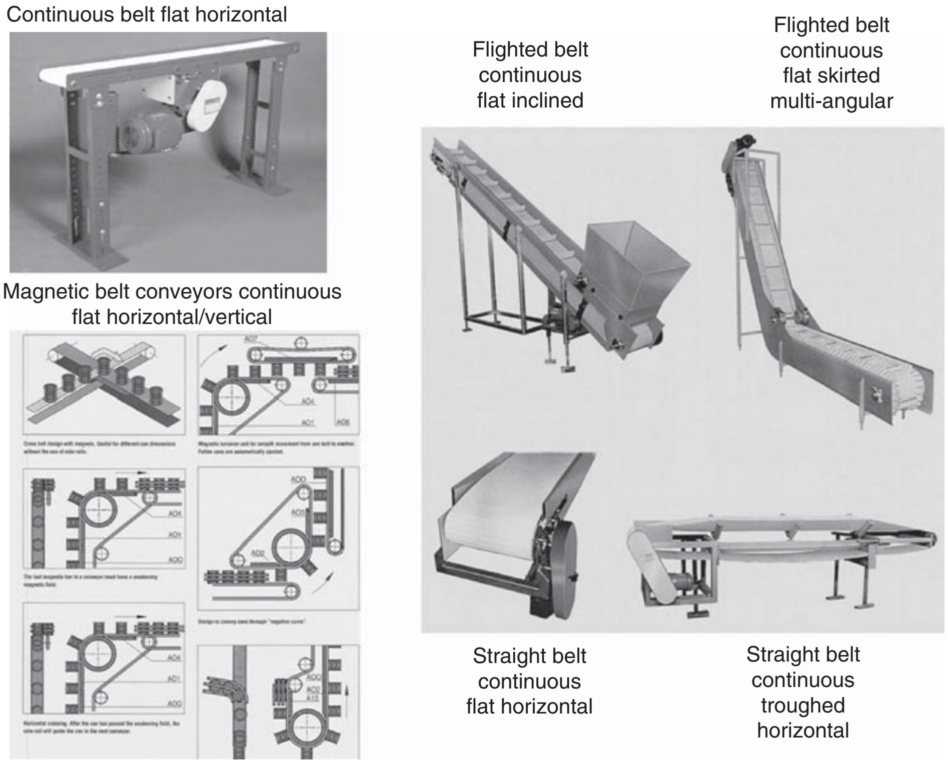

Continuous belt flat horizontal

Magnetic belt conveyors continuous flat horizontal/vertical

Flighted belt continuous flat inclined

Flighted belt continuous flat skirted multi-angular

Straight belt continuous flat horizontal

Straight belt continuous troughed horizontal

Figure 5. Belt conveyor types.

product (from idler roller to driver roller), while the return section runs from the driver back to the idler underneath the top section to form a closed loop. Belt conveyors can be driven at the drive or discharge end or at most locations on the return leg, generally near the discharge end. Common practice is to drive from the discharge end. Pushing by driving from the idler end is problematic, but could be used for very short lightly loaded belt conveyors.

Support for the top section may take the form of a fixed sheet or metal on which the belt slides or a series of equally spaced free-turning rollers or slider bars. Support for the return section takes the form of free-turning rollers or a stationary metal strip or horn. A special type of belt conveyor is the trough conveyor, which has troughing idlers that consist of two or more rollers arranged to turn up the edges of the belt to form it into a moving trough for usually granular or aggregate products.

Belt conveyors run at a variety of speeds and conditions. Belt conveyors can be used as follows:

1. To transport granular bulk, boxes, cartons, confectionery products, or randomly distributed containers.
2. To set the pace of assembly operations.
3. As a timing medium for integrated handling systems or subsequent machine operation.
4. For controlling and/or spacing products through the use of top and bottom or side-to-side grip belts.

Lug or bar chain design

This consists of

- Car-type conveyor
- Crossbar conveyor
- Drag chain conveyor
- Flight or bucket conveyor
- Floor chain conveyor
- Overhead trolley conveyor
- Pan or apron conveyors
- Pallet-type conveyor, indexing or continuous
- Pin-type slat conveyor
- Pocket conveyor
- Pusher bar conveyor
- Pusher chain conveyor
- Reciprocating-beam conveyor
- Rope and button conveyor
- Shuttle conveyor
- Sliding-chain conveyors
- Walking-beam conveyor
- Vertical elevator chain conveyor

Lug or bar chain conveyors transport items via hooks, brackets, or bars attached to the top or bottom sections of most types of chains at a predetermined pitch, which will pull or push the input or product with no slippage.

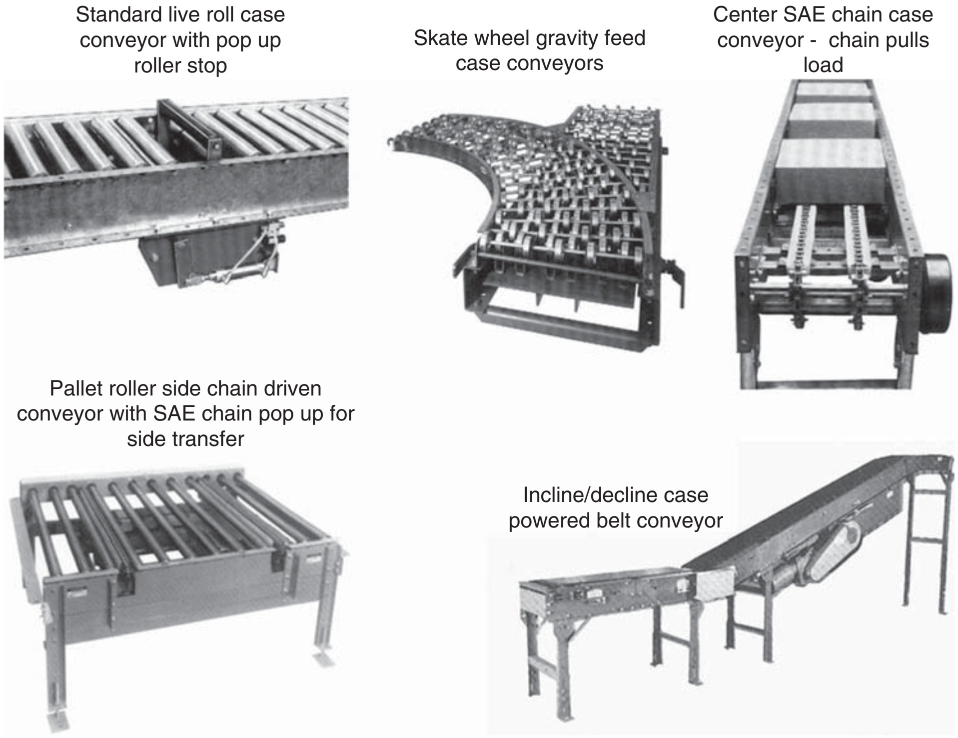

Figure 6. Case and pallet conveyor types.

Roller Design (See Figure 6)

This consists of

- Nonpowered roller or wheel conveyors or gravity roller or wheel conveyors
- Chain-driven live roller conveyors
- Roller spiral gravity conveyor
- Belt-driven live roller conveyor
- Line-shaft roller conveyor—straight, curved, and spiral
- Skate-wheel spiral conveyor—straight, curved, and spiral
- Skate-wheel conveyor

This type of conveyor system is used mainly for transporting large and/or heavy inputs or components such as large cartons (empty or full), cases, pallets, or unit loads.

Screw Design (See Figure 7)

This consists of

- Screw conveyors
- Ribbon flight screw conveyor
- Gravity chutes or spiral cage

Mostly granular or dough-type products are transported and/or mixed via screws that are fully or partly contained in a tube or trough.

Cable Design (See Figure 8)

This consists of

- Floor cable conveyors
- Overhead track with powered rollers
- Steel cable conveyors
- Steel-sheathed cable conveyors
- Urethane cable conveyors

Another basic conveyor design employs a cable as the transporting vehicle. The cable conveyor is used as an inexpensive method of moving lightweight containers, primarily empty cans and plastic bottles, in single-file mode only, at speeds of $\leq$800–1000 containers per minute. The method is also used in the food industry for handling full containers (usually cans) generally at speeds under 500 containers per minute. In operation, a $\frac{3}{8}$-in. (9.5-mm)-diameter, nylon-coated steel cable driven by a motor is supported on small-diameter sheaves along its length. The containers are seated on top of the cable and held in position by adjustable side guiderails made of stainless steel, aluminum, or plastic. The cable provides the drive and friction to move the container.

This method provides relatively low-cost conveying, notably for conditions where lengthy distances must be economically traversed in a plant environment. A capacity for long pulls and curves can minimize transfer points. Although about one-third the cost of flat-topped conveyors, the system can be used effectively for accumulating containers such as plastic bottles and metal cans.

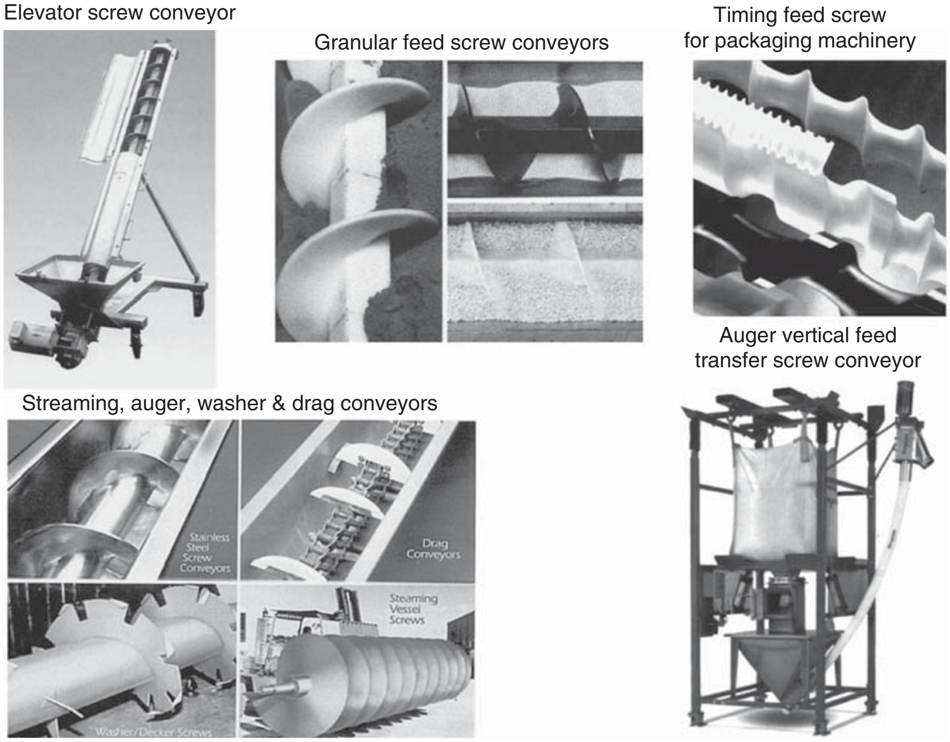

Figure 7. Screw transfer designs.

Also, urethane has made it possible to make short multiple cable transfer and positioning conveyors for a wide variety of products and inputs, especially cartons, pouches, and bags.

Air of Vacuum Design (See Figure 9)

This consists of

- Airveyor (air-driven conveyor)
- Vertical or angled air chutes
- Vacuum bulk-transfer tube conveyor
- Vacuum holddown conveyor
- Air-transfer tube conveyor for parts
- Pneumatic conveying

In the last few decades, packaging technology has developed new methods of stabilizing lightweight and/or some oddly shaped containers by drawing the product down onto flat-topped chain or belts through the use of a vacuum plenum. This permits conveying the containers at much higher speeds. The same concept can be applied to the operation of elevators and lowerators, but is not common. (See also Air conveying.)

Inputs or products can be very effectively moved in mass or single file on a thin film of air. Pressurized air is blown into a plenum, and small holes are drilled or punched out at an angle into a stationary plate. The containers are then supported by air pressure, with their motion over the plate induced by air coming out of the holes' raked angle. A major advantage of this low-friction system is the reduction in the number of moving parts and reduced maintenance. Disadvantages are the large blower requirements, which cause noise and power consumption issues as well as plant air contamination and pressures. Air transfer is effective for inputs or products that have light weight, low center of gravity, and a difficult shape, such as cartons, toilet tissue, and bags.

Pneumatic tubes are very common for the transfer of granular or powder products, and some solid objects can also be transferred effectively such as caps.

Vibratory Design (See Figure 10)

This consists of

- Vibrating spiral conveyors
- Vibrating straight transfer conveyors

Most vibratory designs are used to convey granular-type products over short and long distances. Cereal companies are common users of this type of conveyor.

POWER TRANSMISSION COMPONENTS

The following analyses are applicable to almost all types of conveyor designs. Each conveying system must have a "drive." The term "drive" refers to the apparatus that supplies motive power to the conveyor or is the energy source for the motive power. It usually consists of an electric motor (AC or DC), a gearbox, and possibly a mechanical drive train (shaft, chain, or belt). The most common configuration is still an AC electric motor, gearbox, and chain drive. Note also that the electric motor may be supplied by a VFO or variable frequency drive, which is becoming more of the standard method of control.

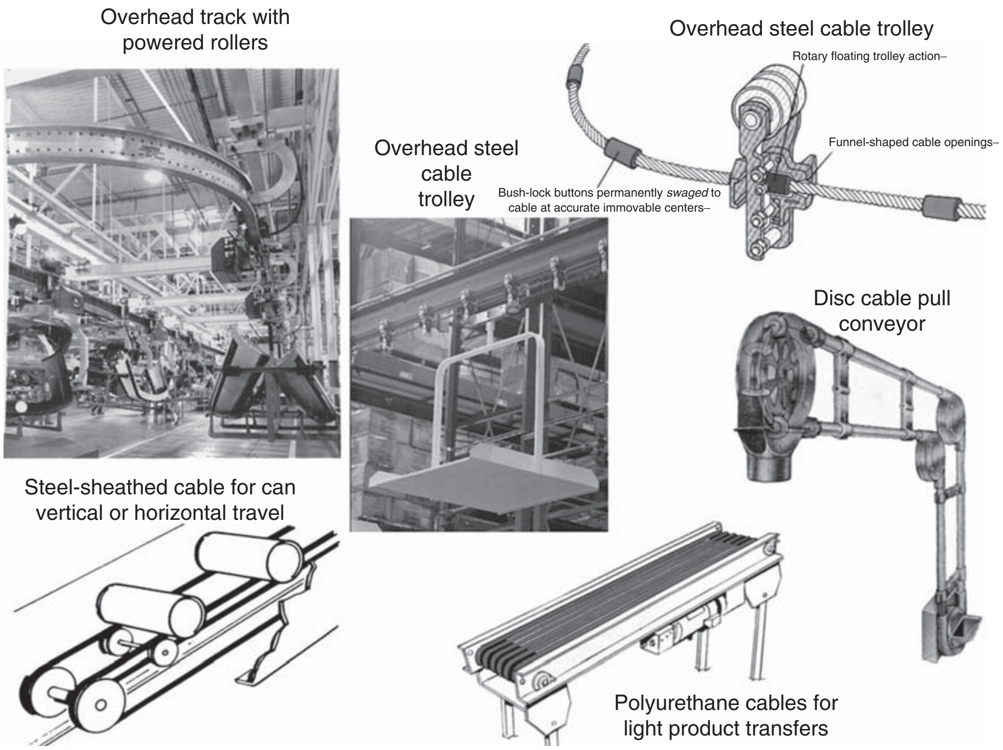

Figure 8. Cable and trolley conveyor types.

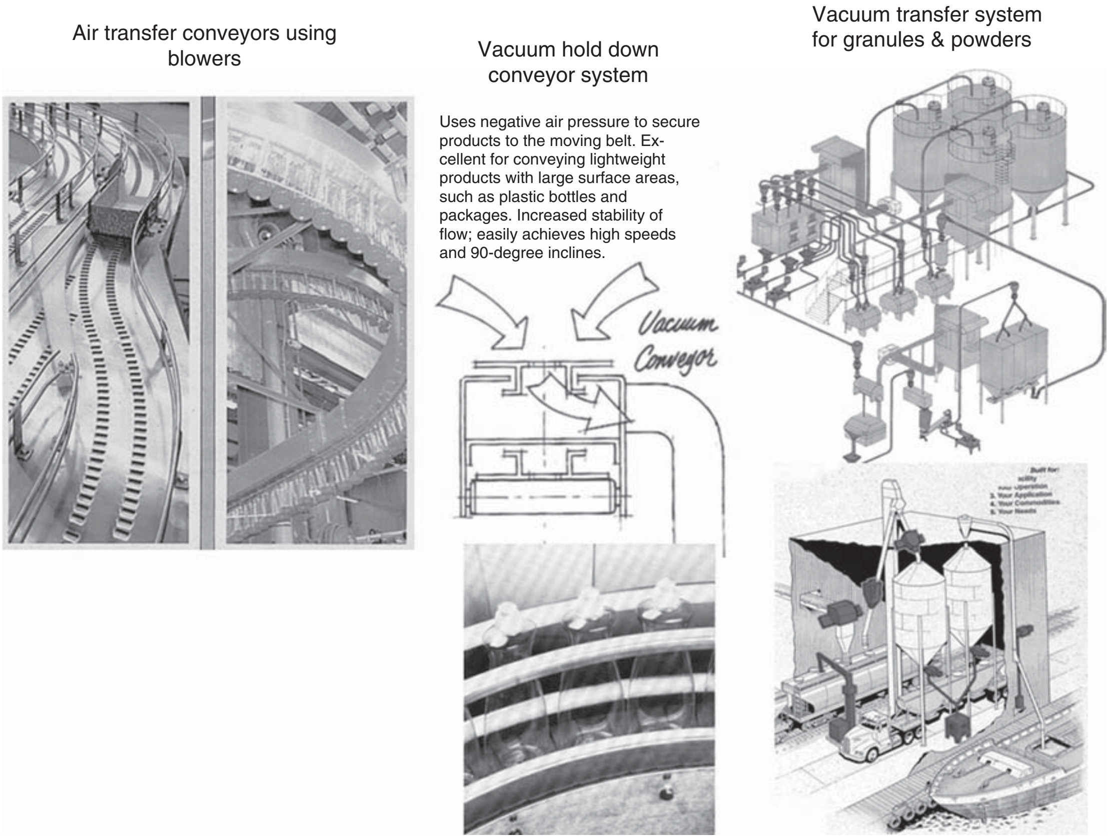

Uses negative air pressure to secure products to the moving belt. Excellent for conveying lightweight products with large surface areas, such as plastic bottles and packages. Increased stability of flow; easily achieves high speeds and 90-degree inclines.

Figure 9. Vacuum and air transfer systems.

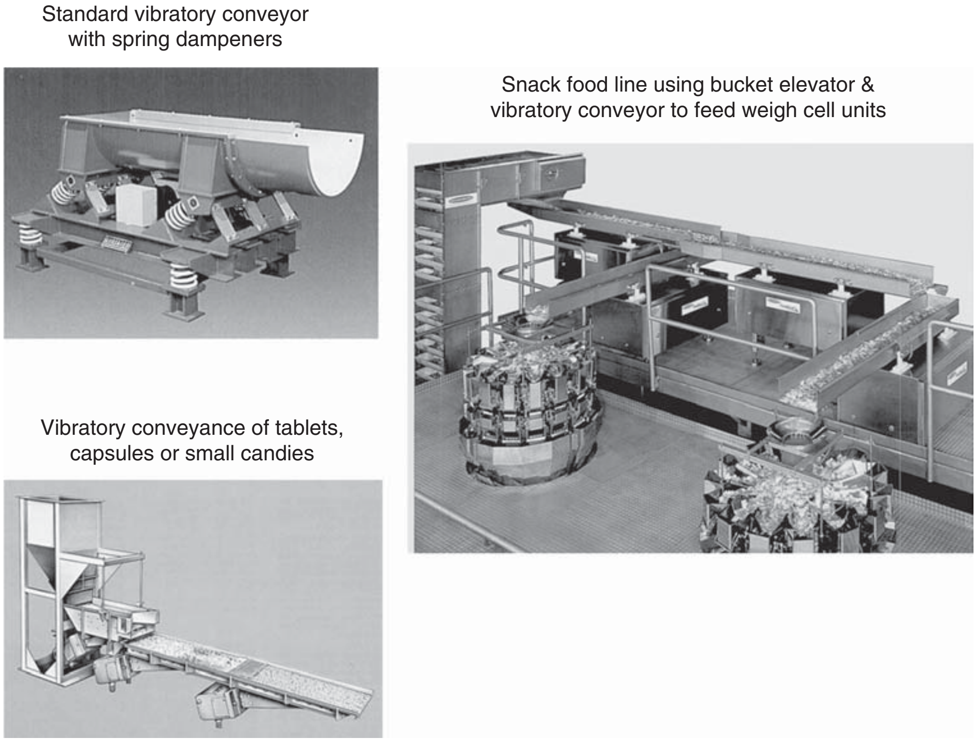

Standard vibratory conveyor with spring dampeners

Snack food line using bucket elevator & vibratory conveyor to feed weigh cell units

Vibratory conveyance of tablets, capsules or small candies

Figure 10. Vibratory feeder conveyors.

Gearboxes

The purpose of a gearbox is to change the rotational speed and torque of a rotating shaft. Most gearboxes are *fixed-ratio* designs, where the ratio of input speed to output speed is constant. Fixed-ratio gearboxes are best with an AC inverter, and mechanically variable gearboxes should normally not be used with an AC inverter.

Belt-Pulley Power Transmission

A flexible connector (belt) is wrapped around two or more pulleys mounted on shafts. Power is transmitted from one pulley to another by a difference in tension in different sections of the belt.

There are two types of belt drives: positive (sometimes called timing belts) and nonpositive. In nonpositive belt arrangements, friction is relied on to transmit the peripheral force from the driving pulley to the belt and then to the driven pulley. This design permits a small amount of slippage between the belt and the pulleys. In positive belt drives, the peripheral force is transmitted by positive locking of "teeth" on the belt and pulleys. There is no slippage in this design. Examples of positive drives are gearbelts (standard or HTD). Gearbelts provide minimum noise levels and smooth operation. Care must be taken when high impact loading is required.

Chain–Sprocket Power Transmission

Chain drives are similar in concept to positive belt drives except that the connector is made from a number of rigid links that are connected by pins. The links rotate about the pins providing the flexibility necessary to wrap the chain around the sprocket. The pins engage the spaces between the teeth of the sprocket. The most common type of chain used is SAE roller number 40 and 50 steel chain.

TRANSFERS BETWEEN CONVEYORS USING SLAT-TOP CHAINS (SEE FIGURE 11)

The most common types of transfer as used in slat-top (also called table-top) hinged or *roller* chain conveyors and some special lug, mesh, and mat-top conveyors are

1. Butt end
2. Side transfer
3. S-inline transfer

In a *butt-end transfer*, two conveyors are literally put together inline or end to end in such a manner that one chain is short of touching the other chain by at least $\frac{1}{2}$ in. A dead plate or small rollers are placed between the gap to allow the product to run or be pushed across. Also, the upstream chain should be slightly higher by about 1/32 to 1/16 in. than the downstream chain. Therefore the inputs or product will fall or cascade onto the downstream conveyor. Belt, chain, slat-top chains (also called tabletop), mat, and mesh-type conveyors can all be butt-ended. Some mesh-type conveyors have comb transfer plates between end to end conveyors to reduce dead transfer and improve product flow stability.

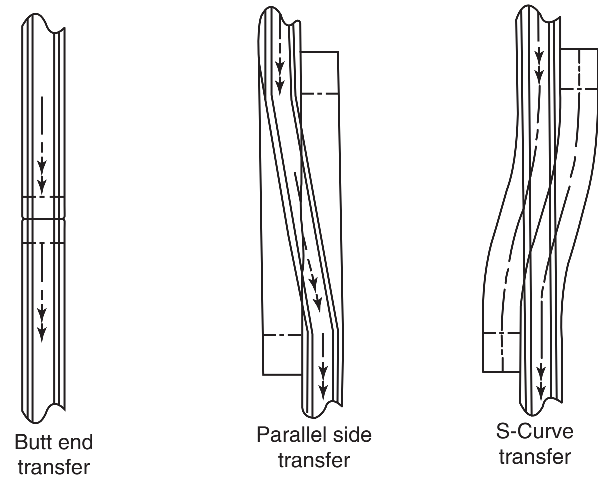

Figure 11. Type of slat-chain conveyor-to-conveyor transfer.

It is not advisable to use only a dead plate transfer for:

- Unstable packages with a difficult shape and/or high center of gravity or product that is open on the top and could allow spillover of the product bouncing across the dead plate or being pushed across by the next product.
- Conveyor speeds are above 150 ft/min.
- Package is shorter than the dead plate or transfer roller such that the package will hang up and wait for the next package to push it off.
- Packages have a base with sharp edges.

Twin side-driven belt conveyors can be used to grip most types of containers (especially with vertical side faces) and laterally carry them over the dead spot on the butt-end transfer. High-speed transfers can be accomplished under specific conditions.

In a *side transfer*, two conveyors are placed side by side so that the package is guided via angled guiderails from one conveyor onto the other. This ensures that the package will be controlled and powered from one conveyor onto the next.

The items one should consider when designing side transfers are

- The gap between chains should never exceed $\frac{1}{4}$ in. (6 mm); $\frac{1}{8}$ in. is optimum.
- The downstream conveyor should be about $\frac{1}{32}$–$\frac{1}{16}$ in. (1 mm) lower than the upstream conveyor for good transfer.
- The angle of cross transfer should not be greater than 15°. For difficult shapes or higher centers of gravity, less than 10° is advisable.
- Guiderail shape can be critical for difficult shapes.
- Conveyor speed differentials can be very critical.
- Because the transfer guiderails are angled to the conveyor pull direction, rotational forces on the container or input can be substantial.

In an *S-curve transfer*, two conveyors operate parallel together in an elongated S form so that the guiderails are straight and the conveyors flex at the transfer. This ensures that the package will be controlled and powered from one conveyor onto the next in line with minimal side forces and maximum control. Although this type of conveyor is more expensive than the traditional side transfer, the control for difficult shapes is superior and guiderail changeover to other sizes is quicker and more accurate. The items one should consider when designing S-transfers are as follows:

1. The gap between chains should never exceed $\frac{1}{4}$ in. (6 mm).
2. The downstream conveyor should be about $\frac{1}{32}$–$\frac{1}{16}$ in. (1 mm) lower than the upstream conveyor for good transfer.
3. Conveyor speed differentials are a minor consideration.
4. The side-flex radii should exceed minimum chain specifications. Only side-flex conveyor chains can be used.
5. The idle and drive ends should be straight sections for about 12 in.

In general, conveyors are critical elements in any packaging process and are grossly misunderstood and poorly manufactured. This is mainly due to nonpackaging people and some packaging people thinking that conveyors are non-value-added items that are as follows:

- Not a major item or consideration.
- The last thing considered in packaging line design and the last item purchased.
- Cheap units for moving inputs from machine to machine.
- One conveyor type is as good as another.

This thinking can be disastrous for many inputs and packages that have difficult or irregular shapes, sizes, and weights.

DESIGN AND INSTALLATION OF GUIDERAILS AND HANDLING CONTROL COMPONENTS

In general, guiderails are critical control parts attached to every conveyor system. They are very important parts in any packaging process and are grossly misunderstood, poorly manufactured, poorly set up, and usually not robust enough. This is mainly because most people think that guiderails are like the conveyors themselves, non-value-added items that are as follows:

- Not a major item or consideration.
- The last thing considered in line design and are poorly specified.
- Cheap units for just keeping inputs from falling over the conveyor.
- One guiderail is as good as another.

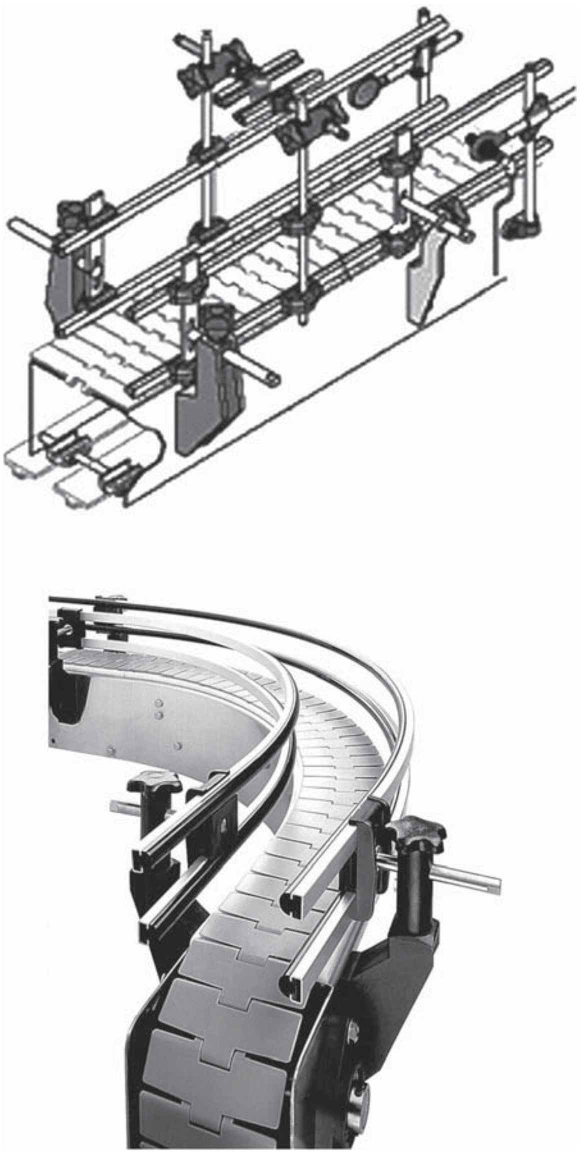

Figure 12. Typical guiderail configurations.

This thinking can be disastrous for many package shapes and sizes. Today, many packaging engineers require quick positive position guiderails that are robust in adjustment features. This is imperative on modern packaging lines that have multiple changeovers (Figure 12).

SPEEDS, FEEDS, DYNAMICS, AND LOADS FOR INTERCONNECTING MACHINERY

The common thread throughout all the operations described above is the use of conveyors to transport inputs from machine to machine, and finally to storage facilities or shipping positions. In general, each machine or staging point will have different requirements in terms of container spacing, linear infeed and outfeed speeds, method of infeed and input, or package or case orientation. For the packaging line to function smoothly, the conveying system must provide the required changes in pitch and speed and must also serve at times as a reservoir of inputs to help level out fluctuations in machine operation. In addition, the conveying system may also have to convert from single to multilane or mass flow and vice versa. All of these requirements must be met without tipping, spilling, jamming, or damaging the inputs, packages, cases, or pallet loads.

In the past, packages or case transfer rates were relatively low (e.g., ≤ 300 ppm or <20 cases per minute) and the packages were geometrically simple with low centers of gravity (e.g., short, round bottles). Recently, however, higher speed and performance requirements and more sophisticated machines have resulted in increased line rates (≤ 2000 bottles per minute in the case of breweries). Also, the aesthetic appeal of complex shapes and the use of lightweight materials and thin walling have resulted in a new generation of stability and quality problems associated with conveyance systems.

Traditionally, line speeds have been dictated by the operating capacity of the critical machine in the line such as the filling station. As a result of these changes, however, the performance of today's lines are limited not by the capabilities of the machinery employed but by the conveying systems used for package transport and manipulation.

CONVEYOR DESIGN

A packaging line should try to balance its machinery and conveyors with compatible function type. *Function type* means the method of operation, which can be either continuous or intermittent. Most low-speed lines generally have intermittent-motion machinery. High-speed lines usually have all continuous motion machinery. Medium-speed lines could be a mix of both. There usually are tremendous problems when a intermittent machine is coupled to a continuous-motion machine. The best way to solve the mix is to place a buffer between the two elements. These two motions are almost impossible to line-shaft mechanically but could be electronically line-shafted, but with great difficulty. It is possible to effectively run an intermittent motion on top of or within a continuous-motion machine or vice versa. These types of new high-technology machines require the correct selection of conveyor system for optimal results.

All packaging machines and equipment require some form of conveyance system to transport product or inputs from one machine to the next. Conveyors are therefore an integral part of the packaging process and are critical to the function of the packaging process.

The primary objective in the design or selection of the conveyor is that it function as efficiently and with as little maintenance as possible. Factors to consider are materials, load capacity, type of drive, speed range, and capability of the conveyor, not only with the objects being transported but also with the other equipment in the production line.

Many industries have developed specialized conveyors to suit particular needs. Often they travel at very slow speeds. Overhead trolley conveyors, for example, are used in heavy industrial applications, such as in automative plants and in other heavy manufacturing facilities. Drag-type chain conveyors connect under an automobile's chassis and intermittently and very slowly pull the vehicle along its manufacturing and assembly cycle.

Interfacing with feedscrews (feedscrews are sometimes called *scolls, timing screws, worms*) can be very critical. Normally, conveyors should run about 10% faster than the discharge feedscrew pitch.

CONVEYOR TECHNOLOGY RELATED TO SPEED

The beer–beverage industry is a prime example of reliance on advanced conveying and packaging technology to meet steadily increasing demands for greater speeds, production efficiencies, and marketing innovations. The developments in current high-speed conveyor systems are a response to this need. Today's state-of-the-art high-production conveyor systems can achieve smooth, damage-free travel of containers from delivery to final packaging. The design challenge is to sustain high production rates through the proper integration of the various conveyor types despite any temporary interruptions in container flow that may occur at any points.

High-speed can–bottle conveyor technology is a combination of up-to-date mechanical, electromechanical, and electrical/electronic techniques, resulting in production capabilities of up to 2000 cpm and plastic bottle rates of 200–1000 bottles per minute (bpm). The high production derives from container transport and accumulation techniques combined with microcircuit-controlled, start–stop, and speed modulation that compensates for intermittent container-flow variations.

Most high-speed container packaging lines have one or more critical machines in the line, such as the filling machine, which dictates the flow parameters for the remainder of the system. For smooth continuous production, all functions upstream and downstream of the critical machine(s) must be designed to assure an uninterrupted supply of inputs in and out of the critical machine(s). The conveyor system then must isolate discontinuities in input flow so that the critical machine(s) will be neither short of inputs from the upstream side nor slowed or shut down because of inputs that are backed up downstream. Continuous movement of the inputs in and out of the critical machine(s) is the best indication that the conveyor system is functioning properly, barring unreliability in upstream and downstream machines.

Backpressure is a multiple of the product weight times the coefficient of friction between the chain and product. Factors affecting chain pulls include the type of chain, container weight, and whether the process is dry or wet, depending on the product being handled. Smooth side transfers to and from the buffer areas and coordination of conveyor speeds with the number of lanes also are critical to the maintenance of the high production rates.

HANDLING LIGHTWEIGHT CONTAINERS

For delicate inputs or packages such as lightweight aluminum cans and thin-walled plastic bottles, confectionery goods, bakery goods, and medical and high-cost quality products, conveyors must handle the inputs gently, with as little contact and pressure as possible. This is accomplished by combining the buffer techniques and container traffic patterns with sensing and interlock devices that prevent jamming of containers and assure smooth, shock-free flow and minimal surging (which is critical for some types of plastic containers). Conveyor surfaces that reduce friction, techniques that maintain container-separation gaps, dimensional precision in fabrication of conveyor components to minimize binding and jerking, and interlocked motion controls are also a requirement for handling lightweight containers.

The container material, type, and shape are equally important factors in the design of a conveyor. Flow paths and buffer areas must be sensitive to the increased jamming potential of nonround shapes. Lightweight plastic bottles, particularly without base cups, are more likely to tip over. Usually nonround lightweight plastic container designs might function best with vacuum conveyors that stabilize the packages by pulling them and holding them onto conveyor surface for optimum control. Another method more commonly used is to use airveyors and convey plastic bottles via a designed in bottle neck ring.

STAGES IN CONVEYING

Today most production packaging lines receive a continuous supply of containers from single or multiple feed lines. The latest designs use a programmable controller that contains the electronic logic for operation of the solenoids, motors, clutches, brakes, and other control components to monitor the supply lines and determine the routing of inputs into and through the packaging line and the routing of finished goods to the truck or warehouse.

Sometimes, to prevent impact shocks downstream, notably at the critical machine, a comparatively slow, usually double or triple $7\frac{1}{2}$-in. (19-cm)-wide mass conveyor is used to spread the large volume of inputs, such as round stable containers, over a wider surface area. The high production rate can then be maintained, and the conveyor velocity is limited to up to 50 ft/min (15 m/min). Experience has shown this rate to be the maximum manageable at this stage of the production line to minimize package damage.

SINGLE FILING FROM MASS FLOW

Conventional methods of single filing containers have been limited to round units, with the volume of containers from multiple lanes or mass flow being directed into a single lane with the aid of converging guiderails (which have a shaker bar or use small plastic roller chain in the vertical position to facilitate merging and reducing friction or binding) mounted over multiple-speed combining conveyors.

With new computer-controlled, low-pressure techniques, however, nonround shapes can be conveyed at high speed by photoelectric monitoring of the gaps between the containers at the output end of the station. Chain speeds are adjusted automatically to maintain the desired gap between the containers and the optimum single-file exit rate. In addition to being much more tolerant of nonround container shapes, this method is significantly quieter and assures gentler handling of less-sturdy containers. Care must be taken in using this technique, because it will work only for a specific range of nonround containers.

SYSTEM DESIGN

The following factors affect the type and design of a conveyor system:

1. Input or package material, shape, size, weight, and center of gravity.
2. The conveyor system's speed of operation.
3. The space available and the production line layout and flow.
4. The best location for the major pieces of equipment and their interrelationships.
5. The location points of supply for the system.
6. The routing of finished products to warehouse and/or marketplace.
7. The production volume needed by the marketing department (present and future needs).
8. The cost justification for the system.
9. The probable return on the investment.
10. Locating points of labor needs and the most efficient use of the labor supply.
11. Access routes for primary and secondary packaging supplies, labeling, and maintenance.
12. The power, air, and/or hydraulic services that are available for systems operation.
13. The logic requirements of the electrical power and control system.
14. The systems basic pacing factors—whether the design is based on maximum process speed or on the projected sales volume.

Profits of successful consumer products companies are heavily influenced by the proper design and installation of conveyors in their packaging lines.

Special thanks to the following manufacturers for their input and materials. They have a wealth of knowledge, experience, and products.

uni-chains Manufacturing, Inc.
Tel: (610) 743-6964, (800) 937-2864,
Fax: (610) 372-3590
Holli Musante
e-mail: hmu@unichains.com
Web site: http://www.unichains.com

Rexnord
2000 Sam Rittenburg Boulevard, Suite 2011
Charleston, SC 29407 USA
Rick Corlett Tel. (262) 376-4678
Phone: 843-852-3456
Fax: 843-852-3471
Web site: http://www.rexnord.com

BIBLIOGRAPHY

General References

Conveyor Equipment Manufacturer's Association (CEMA) [9323 Hungerford Drive, 6 Rockville, MD, 20850, telephone (301) 738–2448], http://www.cemanet.org/publications/index.html.

ANSI/PMMI B155.1-2006. *American National Standard for Packaging Machinery and Packaging Related Converting Machinery—Safety Requirements for Construction, Care, and Use. ANSI*, American National Standards Institute, Inc., 1430 Broadway, New York, NY, 10018. Harmonized with ISO/EN requirements, http://www.ansi.org/.

ANSI B20.1-2006. *American National Standard for Safety Standard for Conveyors and Related Equipment*. ANSI, American National Standards Institute, Inc., 1430 Broadway, New York, NY 10018, http://www.ansi.org/.

F. Nippard, *Dynamic Analysis of Container Conveyance Systems*, Zarpac Inc., 1185 North Service Road E, Oakville, Ontario L6H 1A7, Canada, 1991.

F. Nippard, *Kinematic Analysis of Container Conveyance Systems*, Zarpac Inc., 1185 North Service Road E, Oakville, Ontario L6H 1A7, Canada, 1990.

P. J. Zepf, P. Eng., CPP, *How to Calculate Wastage and Rework in Production Process*, Zarpac Inc., 1185 North Service Road E, Oakville, Ontario L6H 1A7, Canada, 2002, http://www.zarpac.com.

P. J. Zepf, P.Eng., CPP, *How to Implement Performance Measurements into a Production Process,* Zarpac Inc., 1185 North Service Road E, Oakville, Ontario L6H 1A7, Canada, 2002, http://www.zarpac.com.

CORRUGATED PLASTIC

Neal Ferguson
I.C.C. Primex Plastics Corporation
Updated by Staff

INTRODUCTION

Corrugated plastic refers to a wide range of extruded twin-wall plastic sheet products produced from high-impact polypropylene resin with a similar makeup to corrugated fiberboard. It is a lightweight, tough material that can be easily cut. Theoretically, almost any plastic material can be formed into a corrugated profile, but costs can be prohibitive. In the United States market, polypropylene copolymer (see Polypropylene) and high-density polyethylene (see Polyethylene, High-Density) are the materials in common use, although there is a small quantity of polycarbonate (see Polycarbonate) material imported for specialized outdoor applications. The board is marketed under the following trademarks: Coroplast, Correx, Corrulite, Corriflute, and Twinplast.

Correx and Coroplast are extruded profiles. Corrulite is laminated from three separate sheets and has the characteristic S-shaped flute of standard fiberboard. In all cases, the formability and mechanical properties are very similar, although the printability of the extruded sheet is superior. The plastic corrugated board has advantages over standard fiberboard, but certainly cannot be used as a substitute for all applications. The packaging designer should consider the following opposing criteria:

Advantages	**Disadvantages**
Long life	Cost
Chemical resistance	Formability
Insulation	Temperature resistance
Multiple color choice	Ultraviolet degradation
Strength: weight ratio	
Waterproofness	

PROPERTIES

Plastic corrugated board utilizes test data from both the fiber and plastics industries, and this can lead to confusion. Plastic corrugated's strength and durability have no direct relationship to corrugated fiberboard. Corrugated plastic sheet is inert. It is pH neutral. At regular temperatures most oils, solvents, and water have no effect. This allows good performance under adverse weather conditions or for a product exposed to harsh chemicals. When used in archival, pharmaceutical, and hospital applications, Coroplast may act as a carrier through a sterilization system (1). It can be wiped down with alcohol, autoclaved (check for extreme conditions), and treated with ethylene oxide gas. A single treatment by gamma radiation is not critical, but 4–5 exposures to the Standard AECL-2.5 mega rad dose will be sufficient to cause polymer breakdown. The rough handling capability of Coroplast compares well against fiberboard, and it has a significantly higher burst, puncture and edge, and flat crush properties than that of B flute fiberboard. Special products require additives that are needed for UV protection, antistatic properties, flame-retardant properties, custom colors, and anti-corrosion properties. For general performance comparisons of corrugated plastic and corrugated fiberboard, see Tables 1 and 2.

PRINTING TECHNIQUES

Plastic corrugated board is supplied in various base colors by blending pigment into the plastic resin. It can be printed by screen printing or flexography (see Decorating; Printing) if the extruded board is flat enough. The polyolefins are nonabsorbent and have poor adhesion surfaces unless they are corona-treated or flame–treated prior to printing (see Surface Modification). Minimum film thickness of ink is essential to expedite ink drying (see Inks). Therefore, ink viscosity should be approximately 10%

Table 1. Mechanical Properties Extruded Profile of Polypropylene Copolymer[a]

Property		Value		
Thickness	in. (mm)	0.157 (4.0)	0.157 (4.0)	0.196 (5.0)
Weight	lb/ft^2 (g/m^2)	0.143 (700)	0.159 (775)	0.205 (1000)
Impact strength[b]				
73.4°F (23°C)	lbf/in. (N/cm)	90.7 (159)	97.9 (171)	126.5 (222)
32°F (0°C)	lbf/in. (N/cm)	88.5 (155.0)	100.3 (175.7)	129.4 (226.6)
−4°F (−20°C)	lbf/in. (N/cm)	62.7 (109.8)	69.4 (121.5)	89.6 (156.9)
Tensile strength				
Load	lbf (N)	62	68.6	88.6
Yield point	lbf/in. (N/cm)	661.5	732.4	945.9
Point of failure	lbf/in.^{2} (N/cm^2)	3417	3783.2	4886.3
Elongation	%	166.3	165.8	165.3
Compression strength[d] flat				
Load	lbf (N)	36 (160.1)	39.5 (175.7)	51.4 (228.6)
Compression	lbf/in.^{2} (N/cm^2)	9.2 (6.3)	10.2 (7.0)	13.2 (9.1)
Strain	%	1.04	1.06	1.08
Vertical flute				
Load	lbf (N)	87.7 (390.1)	97.1 (431.9)	125.4 (557.8)
Compression	lbf/in.^{2} (N/cm^2)	280.8 (193.3)	310.2 (213.9)	401.1 (276.5)
Strain	%	2.37	2.52	2.71
Horizontal flute				
Load	lbf (N)	6.4 (28.5)	7.1 (31.6)	9 (40.0)
Compression	lbf/in.^{2} (N/cm^2)	21.3 (14.7)	23.6 (16.3)	30.5 (21.0)
Strain	%	1.7	1.7	1.4

[a] Tests conducted by Tokan Kogyo Co., Ltd., Japan, on extruded profile.
[b] DuPont Impact Tester to ASTM D781-59 T. Test specimen 1.9685 × 1.9685 in. (50 mm × 50 mm).
[c] Instron Material Tester to ASTM D828-60. Test specimen 9.8425 × 0.5905 in. (250 mm × 15 mm).
[d] Tensilon Material Tester to ASTM D695-69. Test specimen 1.9685 × 1.9685 in. (50 mm × 50 mm).

Table 2. Comparative Tests Between Plastic and Paper[a]

Test #1 Box size:	in. (mm)	$12.4 \times 9.4 \times 11.8$ $(315 \times 240 \times 300)$		
Material:		*Polypropylene*		*Paper*
Board thickness:	in. (mm)	0.157 (4)	0.197 (5)	0.205 (5.2)
Board weight:	lb/ft^2	0.150 (730)	0.191 (930)	A Flute[b]
Compression load:	lbf (N)	485 (2157)	1455 (6472)	661 (2940)
Test #2 Box size:	in. (mm)	$23.6 \times 19.7 \times 16.1$ $(600 \times 500 \times 410)$		
Material:		*Polypropylene*		Paper
Board thickness:	in. (mm)	0.157 (4)	0.197 (5)	0.299 (7.6)
Board weight:	lb/ft^2 (g/m^2)	0.150 (730)	0.191 (930)	Double wall[c]
Compression load:	lbf (N)	717 (3189)	1482 (6592)	1753 (7798)
Distortion:	in. (mm)	0.630 (16)	0.787 (20)	0.512 (13)
Test #3 Box size:	in. (mm)	$15.7 \times 9.4 \times 8.8$ $(400 \times 240 \times 225)$		
Material:		*Polyethylene*		Paper
Board thickness:	in. (mm)	0.150 (3.8)		0.191 (4.85)
Compression load:	lbf (N)	794 (3532)		708 (3149)
Distortion:	in. (mm)	0.472 (12)		0.630 (16)

[a] Testron #2000, compression speed 0.472 in./min (12 mm/min). Ten samples cases at 68°F (20°C).

[b] A flute (B-240)(B-240)(SCP-135)(B-240).

[c] Double-wall corrugated (B-240)(SCP-135)(SCP-135)(SCP-135)(B-240).

higher than normal. Squeegee pressure is normal with the squeegee medium sharp to sharp. Halftones and transparencies are possible using direct emulsion screens or indirect photo-films on a fine monofilament fabric (245–305 mesh). When force-drying, care should be taken to keep the oven temperature below 110°F (43°C) and to prevent sharp variations in air temperature. Corrugated plastic tends to be relatively rigid and, therefore, is best printed on flat–bed types of automatic and semiautomatic equipment.

One of the major uses for corrugated plastic is in signage, so high-quality printing and water resistance are important properties. Coroplast supplies a smooth polypropylene sheet for digital flat-bed printing (2).

FORMING METHODS

Standard boxmaking techniques can be used to fabricated corrugated plastic board. Generally, flat-bed presses using cam action or single stroke are used to die-cut, score, crease, or fold the material. Three-point or four-point, single-side bevel-edge rule is used for cutting. Six-point creasing is used for creasing parallel with the flutes, three-point for creasing across the flutes, to obtain a 90° bend. The packaging designer must bear in mind that the polyolefins have a “memory” and, unlike paperboard, will generally attempt to return to their previous shape. This characteristic calls for modified bending and creasing techniques, but difficulties can be overcome.

High-frequency welding has been the most successful method of joining the material. Because of the nature of the polymer, glues are not generally successful, but lap joints have been accomplished using corona-treated board with silicone-type or hot-melt adhesives (see Adhesives). Metal stitching can be used, but this creates a weak spot immediately surrounding the staple (see Staples).

Milseal 2 is a new, smooth plastic process that seals the edges of heavy duty sheets (3).

CONDUCTIVE CONTAINERS

Changes in the electronic industry resulted in a requirement for different packaging materials. Plastic resins have been formulated to prevent, or dissipate, a static-electricity charge that would normally build up in the material. In the past, a carbon-loaded film was printed onto the surface of corrugated paperboard, but this had a tendency to slough off easily. The sloughing rate can be reduced by dipping the entire material, but this is another area in which plastics have an advantage. If the carbon is introduced into a polymer before extrusion, the wear factor is sharply reduced and the board can be used in near-”clean-room” conditions. The electronic industry has requirements for conductive containers for dip tubes, kitting trays, stackable tote boxes, multitrip shipping containers, dividers, covers, and lids. Coro-Gard (Coroplast) is a conductive plastic sheet made to transport electronic materials and meets the Electronic Industries Association’s standard STD 15-5A, MILP 83668 (United States Air Force), and DOD-HBBK 263.

ENVIRONMENTAL CONCERNS

Twin-wall fluted structures produce strength and rigidity at lower weight, thus reducing the amount of material required for a product. Durability in all weather conditions means a longer life of the product. Polypropylene recycles in processing streams. Polypropylene copolymers are considered inert and nontoxic and safe for use in contact with food.

BIBLIOGRAPHY

Neil Ferguson, "Corrugated Plastic" in M. Bakker, ed., *The Wiley Encyclopedia of Packaging Technology*, 1st edition, John Wiley & Sons, New York, 1986, pp. 226–228; 2nd edition, A. J. Brody and K. S. Marsh, eds., 1997, pp. 285–287.

Cited Publications

1. "Sterilization of Coroplast TM, Coroplast, Dallas, Texas, http://www.coroplast.com/steril.htm, 2008.
2. "General Properties of Coroplast Plastic Sheets," Tech Bulletin CSS-011-93, Coroplast, Dallas, Texas, http://www.coroplast.com/genprop.htm, 2008.
3. "Milseal 2," Mill Industries, www.millsind.com, 2008.

D

DATE CODING AND MARKING

Dale Voney
Markem-Imaje, Kennesaw,
Georgia

Date coding and marking serves many crucial purposes. Within a single date code or product label, one or many of the following functions can be filled: product marketing, product identification, traceability, date and/or time of product creation, expiration of product, product ingredient/chemical composition information, and product usage information. Depending on the type of product produced, where the product is produced, and where the product is sold, state and federal agencies may have specific requirements for the date code.

Most products will receive multiple date codes as they are created, packaged, and processed throughout a supply chain. In the different stages of a production cycle, various technologies are used to efficiently and accurately apply the proper marking. Depending on the objective of the date code and all of the variables involved in a particular application, one may choose from the following coding and marking technologies: continuous ink jet, drop-on-demand, laser, thermal transfer, direct thermal, and contact.

In this article, we will examine each of these technologies and discuss their proper application.

TECHNOLOGIES

Industrial printers used for marking and coding can use a variety of technologies. The most prevalent technologies are described in the following subsections.

CIJ (Continuous Ink Jet)

The principle of CIJ technology is to apply ink to the substrate by deflecting calibrated droplets from a continuously circulating stream. These droplets are distributed in a dot matrix pattern to form desired characters. The dot matrix pattern, or character, is made up of vertical dots controlled electronically. The horizontal placement of drops is achieved by the movement of the substrate under the print head. Ink is distributed from holding tank, through the printer, and into the print head. Droplets are created and dispensed to the substrate by the print head (see Figure 1). Droplets used in printing the message are selectively chosen by the equipment software.

6	Cannon
7	Charge electrode
8	Detection electrode
9	Deflector plates
10	Recovery gutter
11	Head cover
12	Gutter plug

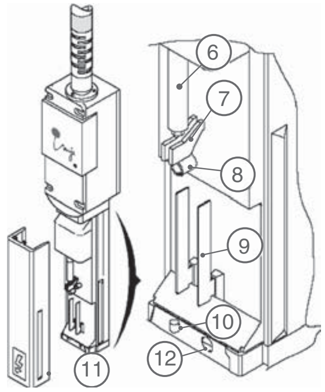

Figure 1. Continuous ink jet printhead.

Droplet creation, calibration, and consistency are crucial to this technology. Within the print head is an ink chamber that contains a small nozzle and a vibrating crystal, called a resonator. The pressurized ink flows through the chamber and toward the opening, called the cannon. During this journey, the resonator changes the characteristics of the ink stream from a continuous stream to a series of droplets that are marginally connected. As the ink stream leaves the cannon, marginally connected “teardrops” begin to form. Due to fluid dynamics, these teardrops eventually form individual, spherical droplets. The size of the drop varies and is dependent on the modulation of the resonator, cannon size, and ink pressure. The droplets continue down the print head and through a charge electrode. Since CIJ inks are conductive, the ink droplets can be selectively charged simply by changing the electrical current on the charge electrode. Only those droplets needed to form the desired matrix pattern or characters will be charged. Droplets then pass through two parallel plates, called deflection plates, whereby the charged droplets are deflected by applying voltage. The remaining uncharged droplets fall directly into a small vacuum tube at the bottom of the print head. The vacuum tube returns the ink to the ink reservoir.

For industrial packaging, CIJ technology is mainly used in **small-character ink jet printers (SCPs)**. Small-character printers are typically used to print directly onto products or primary packages. Depending on character height and dpi requirements, SCPs can also be used for secondary package printing. Here is a brief list of examples of SCP applications: lot identification for glass bottle printing, expiration information on metal cans containing vegetables, time of production on bags of bread, and kosher symbols on hot dog packaging. Due to the large variety of fluid chemistries that can be used in a continuous inkjet printer, it is a preferred printing technology for primary packaging applications.

DOD (Drop-On-Demand)

Drop-on-demand (DOD) ink jet technology uses the principle of applying ink to the substrate by ejecting drops though multiple openings. Each opening corresponds to a specific location on the vertical axis of the message to be printed. Drops are ejected from these openings based on message requirements and character locations relative to the print head (on-demand). DOD technology is mainly used in **Large-character ink jet printers (LCPs)**. There are different mechanisms used in DOD technology for ejecting drops.

Valve-Based. The principle is to supply ink under slight pressure to an array of valves that are all equipped with a drop-ejecting nozzle. By controlling the opening of the valves, the drops can be ejected to print characters or graphics. DOD-valve-based printers have coarse resolution. They are mainly used to print large alphanumeric characters onto shipping cartons (also called secondary packaging), hence their naming as large-character printers or **LCP-valve printers** (see Figure 2).

Piezoelectric-Based. Ink is supplied by a chamber to a print head. Each print head is comprised of an array of chambers that are all equipped with an ejecting nozzle. The principle is to activate a piezoelectric element attached to each chamber in order to deform the chamber. The change of volume of the chamber leads to the intermittent ejection of drops from the nozzle. Piezoelectric-based systems offer finer and more precise control, leading to high-resolution printing. The industry commonly refers to this equipment as “high-resolution printing systems” (see Figure 3).

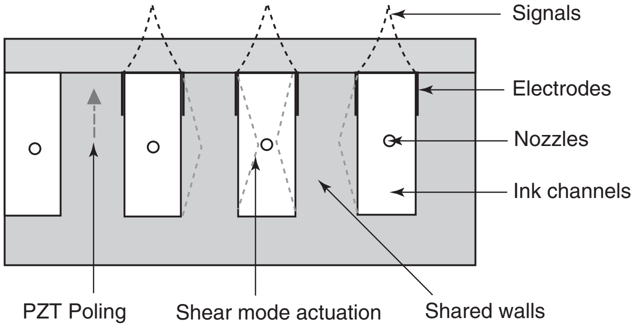

Figure 3. Drop-on-demand technology (piezoelectric-based).

Laser Marking

This technology uses a laser beam that interacts directly with the substrate material to create an indelible mark (see Figure 4). The laser beam can be of different wavelengths according to the laser source that is used. Different wavelengths are chosen in order to interact efficiently with the target substrate material. CO_2 (carbon dioxide) and YAG (yttrium aluminum garnett) laser mediums are the most common types used in the coding and marking industry. Of these two types, CO_2 lasers are used in the packaging industry. YAG lasers are used for marking metal surfaces.

In order to print characters or graphics, the laser beam(s) are directed to the correct location on the substrate. Different technologies are used to create the marking beam and control it:

Mask-Based. A mechanical mask (template) is used to create the pattern on the substrate. The laser marks the substrate according to the pattern placed in front of it. A different mask has to be used for each printed pattern.

Dot Matrix. A pulsed laser beam is formed into a column of dots. These dots are individually activated

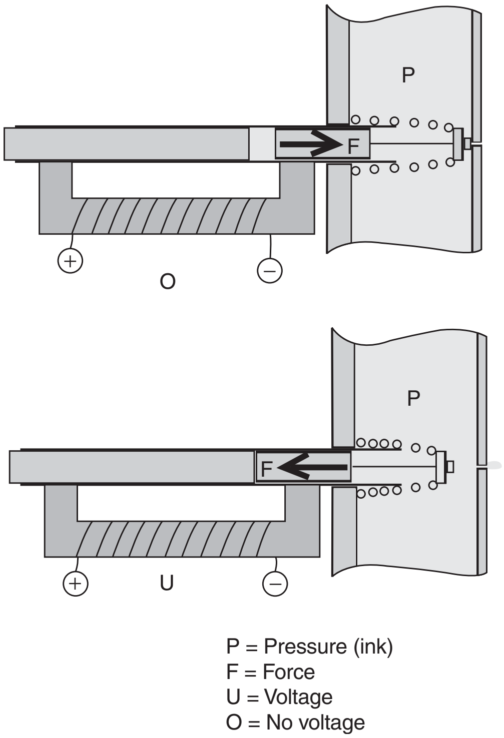

Figure 2. Drop-on-demand technology (valve-based).

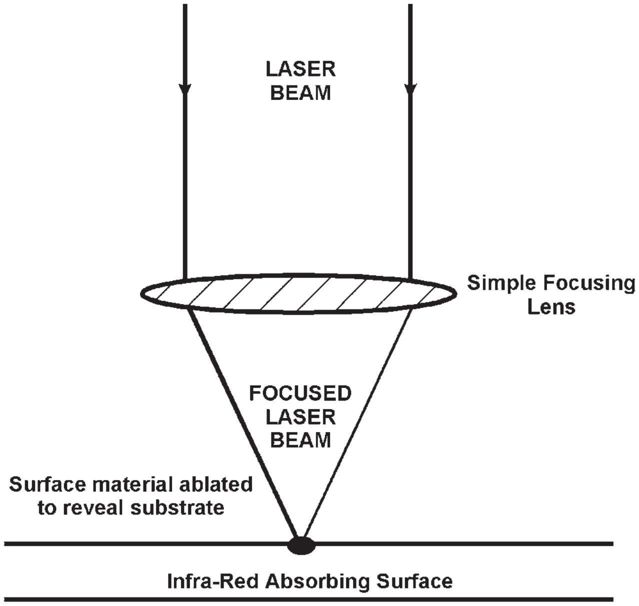

Figure 4. Laser technology.

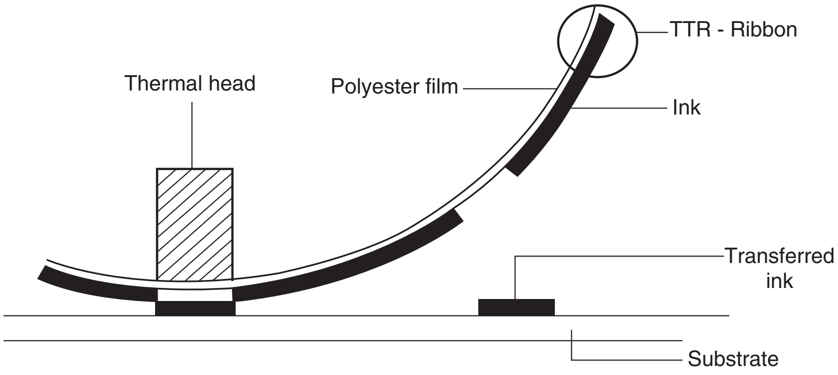

Figure 5. Thermal transfer technology.

for printing a matrix-based image from a repeat combination of columns.

Steered Beam. A pulsed laser beam is displaced along the *X–Y* axis by a set of electronically controlled mirrors.

Lasers used in the packaging industry range from 10 to 150 W of power. Various energies are required for creating legible marks on different substrates and speeds.

Thermal Transfer

This technology uses a thermal print head comprised of a dense array of thermal elements (or thermistors) that can be selectively activated. Printing is accomplished by bringing the thermal head in contact with an inked ribbon. The inked ribbon is pressed against the printable surface. The inked ribbon consists of a base polymer sheet material and a releasable coating made of fusible ink. By heating the ribbon with thermistors within the print head, small areas (dots) of ink are subsequently transferred by contact to the printed substrate (see Figure 5).

Thermal transfer technology can be used in three printing systems:

Thermal Transfer Online (TTO). This technology is used to print directly on packaging film.

Desktop Label. Thermal printheads transfer ink to adhesive labels. In these systems the labels need to be applied manually to the products.

Print and Apply Systems. Thermal printheads transfer ink to adhesive labels. An automated mechanism (applicator) then applies the label to the substrate.

Direct Thermal

This technology also uses thermal print heads, as above. The thermal elements of the printhead come in direct contact with specially treated labels. These labels are sensitive to heat and change color when in contact with an activated thermistor. This thermal technology does not require a thermal transfer ribbon. Two printing systems use direct thermal printing technology: **desktop label** and **print and apply systems**. The concepts of these systems are the same as listed above in the “Thermal Transfer” section (see Figure 6).

Contact Printing

Contact printing relies on mechanical methods to transfer print to a surface. The general principle of contact coding makes use of predefined forms (metal letters, engraved print wheels, rubber pads/stamps, etc.). These forms are pressed into the substrate. The image is transferred as the pressure is removed. Contact printing may or may not involve the use of ink or inked ribbon. Embosser, hot stamp, or roller printers are among these older contact technologies that are still in use today. These contact technologies are gradually being phased-out by electronically controlled printing technologies.

The technologies mentioned in the preceding paragraphs (except Mask Laser) utilize advances electronic technology to create and control character generation. These electronics give the capability of changing and printing variable information on the fly. This limits the amount of human intervention with the date coding equipment and allows for variable and unique messages generation from during production runs.

The latest date coding systems also contain communication capabilities that allow for the option of remote control, monitoring, and data collection. As quality control and regulation becomes more stringent, remote communication to date coding equipment will be more common.

APPLICATIONS

The horizontal segmentation of the packaging market is described below (see Figure 7).

Product/Primary Package Printing

These applications consist of printing: lot numbers, time and/or date of product creation, best before dates, or other product references directly onto the products and/or primary packaging in the manufacturing line. These applications are the fastest and highest-output packaging applications on the the production line, so speed and accuracy of date code placement are crucial. Four types of systems can be chosen:

- *Continuous Ink Jet Marking Systems*. This product is the workhorse for product and/or primary packaging printing applications. It generates marks onto

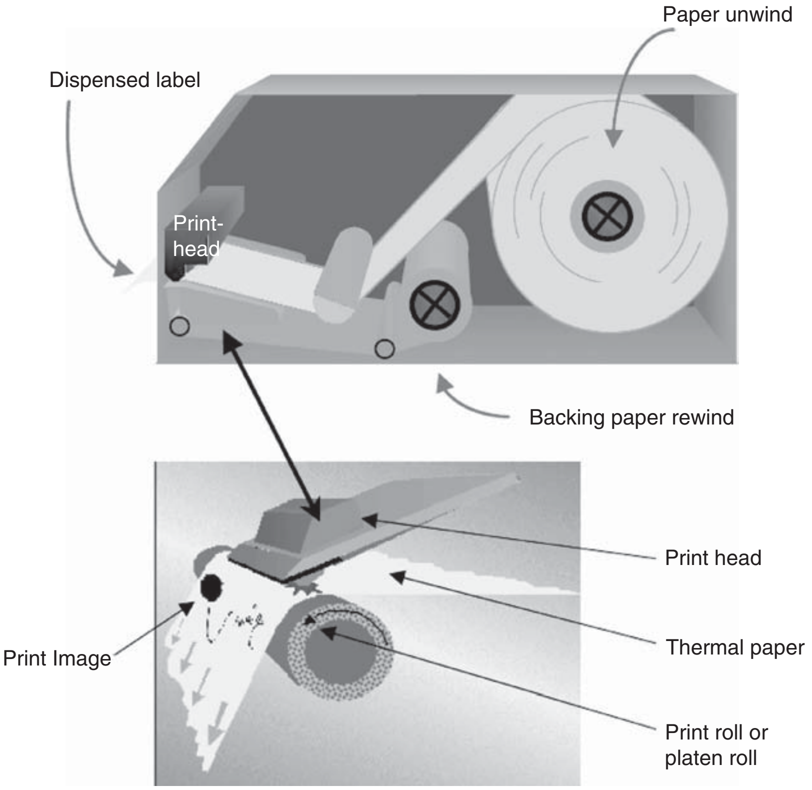

Figure 6. Direct thermal technology.

products without contact, at high speed, with large print distance, on most substrate materials (a wide range of ink chemistries are available). Its limitations are related to its moderate print quality, the limited printed width, and the necessity to use and handle liquid inks that maybe hazardous for fast drying chemistries. Common applications: bottle printing, retail chipboard box printing.

- *Laser Marking Systems*. Laser systems generate indelible marks on many (but not all) packaging substrate materials. They are preferred over ink jet because of their superior print quality, indelible marks, and the absence of consumables. Their main limitation is linked to the inability to mark all material types and colors.

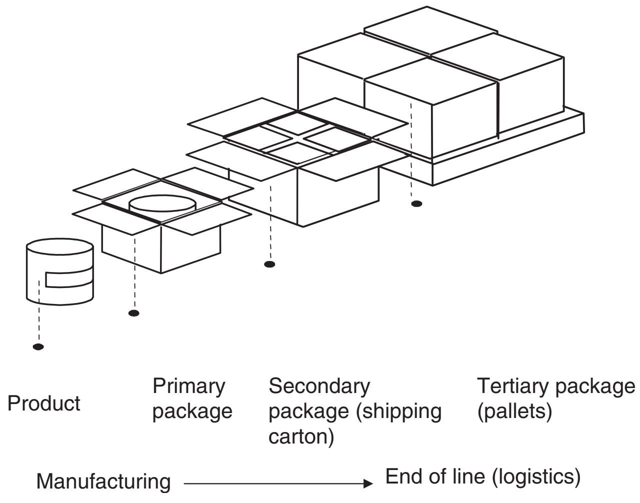

Figure 7. Packaging applications.

- *Thermal Transfer Online Printers (TTO)*. These printers print by contact on film materials. Their main advantage is in print quality. This enables them to print most industrial bar codes with good read rates. Also they do not use liquid consumables. This printing technology is primarily used in packaging film. Printing speeds can be a limitation.
- *Small-Character (DOD-Piezo) Ink Jet Systems*. These systems can be preferred to CIJ in applications where speed and print distance is not demanding. These systems can produce better print quality than CIJ systems.

Secondary Package (Shipping Cartons) and Tertiary Packages (Pallets) Printing

These applications consist of printing product information (product references, lot numbers) and shipping information (manufacturer, customer addresses, and order information). Three types of systems can be chosen:

Print and Apply Label Systems. These systems are the workhorse for these applications. They print high-quality labels that can be read automatically with high reliability with all scanning equipment. Their drawback is related to their limited speed and high cost of labels.

Large-Character Ink Jet Systems. Ink jet systems have the advantage of higher speed (noncontact printing) and better cost of ownership (there is no cost associated with labels).

Valve-Based (LCP Valve). These low-price systems print coarse resolution text or graphics directly onto most packaging substrates. They cannot print the shipping information that requires bar codes.

Piezo-DOD-Based (LCIJ). These systems use different technology variants and therefore come in models that can use either liquid ink (Markem-Imaje's High-Res) or solid ink (Markem-Imaje's HMIJ). They can print high-resolution text and graphics including shipping information that includes bar codes on most packaging materials. Their main limitation against labels is that they cannot meet the highest standards in bar code verification rates, and their output print quality/performance is substrate-dependent.

Desktop Label Printers. These systems are not integrated on packaging lines. The printed labels need to be applied manually to the products. Use of tabletop printers is therefore limited to low-throughput lines, or as backup to print and apply systems.

DECORATING: IN-MOLD LABELING

Ronald Schultz
RBS Technologies, Inc.,
Scottsdale, Arizona

In-mold labeling (IML) is a process for prelabeling plastic containers during the molding operation. IML differs from other prelabeling methods, such as pressure-sensitive and heat-transfer, in that the labeling mechanism is built into the molding machine. No additional labeling equipment or labor is required because the containers are ejected from the molding machine with the labels already in place. One of the most important advantages that IML offers packagers is cost reduction. Use of containers that come from the molder already labeled allows packagers to eliminate their labeling machines and flame treaters along with the labor, maintenance costs, utilities, and floor space for that equipment. Other advantages include labels with the highest-quality graphics, a plastic gram weight savings over post-mold-decorated containers, and, in the case of injection-molded containers, the ability to cover all five sides of a rectangular container with a single label in one operation.

Over the past several years, IML has evolved and grown into three related technologies: extrusion blow mold in-mold labeling (EB-IML), injection mold in-mold labeling (IM-IML), and thermoform in-mold labeling (T-IML).

BLOW MOLD IN-MOLD LABELING

Procter and Gamble recognized the advantages of EB-IML and was the first consumer products manufacturer in North America to use it on HDPE bottles in the late 1970s.

In-mold labeling requires some modifications to the conventional blow-molding procedure (see Blow Molding): (1) In-mold labels for EB-IML have a heat-activated adhesive on the backside; (2) the molds are fitted with vacuum ports or the labels are electrostatically charged to hold the labels in place on the mold wall during the blow-molding operation; (3) label magazines are added to hold stacks of die-cut labels, usually one for the front and one for the back of the container; and (4) a robotic pick-and-place device is added to transfer labels from the magazine into the mold cavity.

In a typical continuous-extrusion blow-molding (EB-IML) process, the robotic pick-and-place device takes a label from the magazine and places the printed side against the wall of the open mold, where it is held in place by the vacuum ports. As the mold closes, it pinches off a section of a molten plastic tube (the parison) as it comes out of the extruder. The closed mold then moves away from the extruder and high-pressure air is injected into the parison, inflating it like a balloon. When the hot plastic parison contacts the back of the label, it activates the adhesive and flows up and around the edges of the label. The label is flush with the surface of the container and becomes an integral part of it. A volume of plastic is displaced that is equal to the volume of the label (Figure 1). The air pressure in the mold is maintained until the container is cool enough to be ejected from the mold.

The largest numbers of EB-IML containers produced in North America are HDPE bottles made on rotary or "wheel" blow molding machines. These machines are used primarily for long runs of containers ranging in size from 8 oz to large, economy-size laundry detergent jugs of more than 300 oz. Volume of production is a function of container size and rotational speed of the wheel. Shorter runs of EB-IML containers are made on shuttle blow molding machines. These can be single- or double-sided with multiple mold cavities on each side. Recent developments in label insertion device technology have permitted retrofitting of older, non-IML shuttle machines to render them IML-capable. Lesser quantities

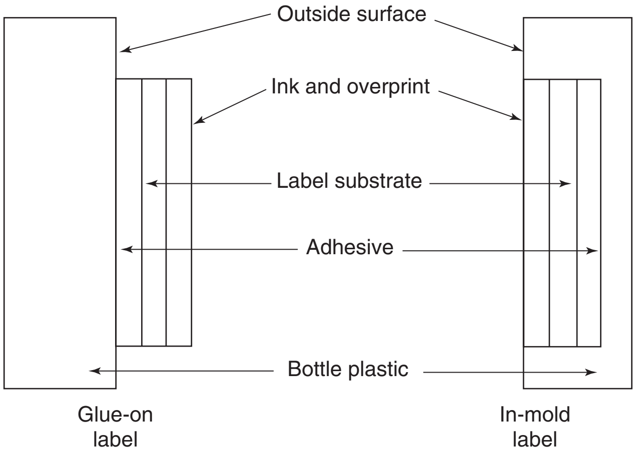

Figure 1. Diagram of in-mold versus glue-applied label.

of in-mold labeled PET and PP bottles are made by injection-stretch blow molding.

The greatest percentage of labels for EB-IML is still produced by integrated converters on large gravure presses, but polyolefin film is now the preferred substrate over 60-lb, coated two-side (C2S) paper litho stock. Film in-mold labels (FIML) are now used in the majority of EB-IML applications, and this trend is expected to continue for the foreseeable future.

Both paper and film labels for EB-IML require a heat-activated sealant layer on the backside. This sealant layer can be an ethylene–vinyl acetate heat seal coating applied on-press by the converter or a coextruded layer produced during the film manufacturing process by an independent substrate supplier. Regardless of the production method, the proper choice of adhesive is critical to the successful functioning of the label during the blow molding operation. Label defects such as blisters can result if the adhesive does not activate completely during blow molding. Once the labels are printed, they are die cut into stacks of individual labels by any one of several different methods including flat bed, rotary, or "high-die."

Gravure printed in-mold labels can have up to 10 colors and offer the highest quality graphics. Advances in print quality now make it feasible to successfully print in-mold labels by other methods such as sheet-fed offset, web offset, and a variety of narrow-web combination presses. These narrow-web presses can combine flexo, uv-flexo, rotary letterpress, and hot-foil stamping to create the type of highly unusual effects desired for labeling of personal care products. Narrow-web or sheet-offset printers use paper or film label stock that has been precoated with the heat-activated adhesive by another converter or an independent substrate supplier. Labels printed on narrow-web equipment can be rotary die cut inline or offline; those printed by sheet-fed offset presses are generally high-die cut.

The most successful film in-mold labels for EB-IML are polyolefin-based materials supplied in both white opaque and clear versions. Many of these are coextrusions of modified HDPE that incorporates a sealable layer and thus do not require application of a liquid adhesive during the converting process. Film in-mold labels offer many advantages over paper IML. These include improved moisture and product resistance, fewer label defects, easier recycling, and the ability to create a "no label" look. A film in-mold labeled container also has little or no label panel bulge typical of a paper IML application. However, film labels still cost at least 50% more than paper labels and are more difficult to print and handle because of static and other problems unique to thin, unsupported plastic substrates. Other disadvantages of the EB-IML process are higher tooling and setup costs, cycle time penalty for label placement and bottle cool-down, and the need to remove paper labels for recycling.

Film in-mold labels have captured a large share of the market and are now used extensively on laundry-product, household-cleaner, premium orange-juice, and motor-oil containers. They have replaced pressure-sensitive and heat-transfer labels in a number of health and beauty aid applications where the "no label" look is desired.

INJECTION IN-MOLD LABELING

Injection in-mold labeling (IM-IML) of open top containers, which has long predominated over EB-IML of bottles in Europe and Asia, is now showing significant growth in North America. The largest market for these containers is for dairy products such as butter, margarine, ice cream, and yogurt. Buckets for paint and cups for soft drinks are also rapidly growing markets. Injection molded in-mold labeled containers can be almost any shape and size from the smallest rectangular tub holding 100 g to large 10-L buckets.

Injection molding of plastic containers differs significantly from blow molding in several ways. Instead of a hot, taffy-like parison inflated by high pressure air into the confines of a hollow blow mold, the plastic used in injection molding is a viscose liquid injected under high temperature and pressure through ports or "gates" into the closed mold. The open space in the closed injection mold will become the container as defined by the male and female halves of the closed mold. The liquid plastic completely fills this space, forming the shape of the container. Once the plastic has solidified, the mold opens and the container is ejected.

Another difference is the labels used for IM-IML. Unlike EB-IML labels, IM-IML labels do not require a heat activated adhesive on the back side. These labels are thinner and are made of the same material as the container. The liquid plastic, injected at high temperature and pressure, fuses to the back of the label without the need for an adhesive. The most common container and label material is polypropylene. Injection molds are manufactured to very tight tolerances and so must the labels used for IM-IML. Die cutting precision required for IM-IML is about three times that of EB-IML.

As in EB-IML, the IM-IML process requires magazines to hold the labels, robotics to pick the labels from the magazine, and molds designed to accommodate the labels. The most common method of holding the label in the mold before the mold closes is electrostatic attraction. The label is given an electrostatic charge after it is picked up from the magazine by the robot.

If the label is for a rectangular container, an assisting device pushes it into the mold cavity. The charge on the label causes it to transfer to the inner surface of the mold. The mold closes and the molten plastic is injected into the mold, either through the male half (inside gating) or from the female side through a hole in the bottom of the label (outside gating). The plastic completely fills the space between the back of the label clinging to the mold cavity wall and the male half of the mold. A single label in the shape of a Maltese cross can cover the bottom and all four sides of a rectangular container in one operation. The "wings" of the label are carefully die cut to meet on the corners of the container (Figure 2).

Cylindrical containers are in-mold labeled in much the same way except that the charged label wraps around the

Figure 2. “Wings” of a container label.

core before the core is inserted into the mold cavity. Once inside the mold cavity, the static charge causes the label to transfer from the core to the inside surface of the mold. The injected molten plastic fills the space between the back of the label and the core.

THERMOFORM IN-MOLD LABELING

Labels similar in appearance to those used in IM-IML are given an electrostatic charge and inserted into the open mold cavity. These labels can be film or paper and have a heat-activated adhesive on the back side very much like those used in EB-IML. Once the labels are positioned in the mold cavity, plastic film or sheet is positioned over the open mold and heated to the point where it just begins to lose its structural integrity. A ram that matches the interior of the container forces the hot plastic film down into the mold cavity. The heat from the plastic film and the pressure from the ram activates the adhesive on the back of the label. The finished, labeled container is then ejected from the mold. T-IML containers can be polypropylene, polystyrene, or other suitable plastics.

Thermoforming machine manufacturers are working to improve both the quality of T-IML containers and the efficiency of the process to better compete against IM-IML.

IML has evolved from the simple blow-molded and injection-molded containers produced in the early days of the process into the sophisticated, even elegant products found in retail markets around the world. Further refinements in materials and processes can be expected to provide better containers at lower costs in the years ahead.

BIBLIOGRAPHY

General Reference

R. B. Schultz, *The ABC’s of IML: A Basic Course,* seminar guide presented by RBS Technologies, Inc., March 2007.

DIAGNOSTIC SENSORS IN PACKAGING AND IN SHELF-LIFE STUDIES

J. J .F. vanVeen and
W. D. van Dongen
TNO Quality of Life, Advanced
Food Analysis Group, Zeist,
The Netherlands

INTRODUCTION

Active and intelligent packaging may provide several benefits to the quality and safety of packed food. The active systems focus on the extension of the shelf life by keeping its quality for a longer period.

The intelligent systems monitor the quality of the food product or the storage conditions of the packed food. In the EU, “intelligent” packaging is defined as “packaging that monitors the internal and/or external conditions of a product through its life cycle.” However, a more suitable name would be diagnostic systems because their main function is to monitor the quality or the storage conditions of the food. A real intelligent system would be a package that takes an appropriate action after a deviation from the desired situation is measured. The value of a measured parameter will in that case act as a trigger for an active packaging system.

Degradation of food products may cause off-flavors or loss of nutritional value resulting in inferior product quality and consumer rejection. The mechanism of degradation and the reaction products highly depend on the type of product. Degradation of nutrients, flavour, and additives is mainly determined by light, pH, oxygen (oxidation), moisture, and other product matrix components.

Optimization of the composition and packaging of food products with respect to shelf life and sensory quality can be done with classical techniques such as high-performance liquid chromatography (LC) and gas chromatography (GC) and microbial testing.

However, noninvasive sensors provide an attractive alternative, because no sampling is required and the same package can be monitored in time under various conditions. This is in contrast to classical techniques where each measurement requires its own sample. In addition, if monitoring of each food package is required, these cheap noninvasive sensors are the only possible solution.

Apart from degradation, monitoring of contaminants such as pathogens or pesticides, in terms of quality control of food products, is also a useful application of noninvasive sensors in this field (1).

A useful classification of noninvasive sensors in packaging that can be used for diagnostic purposes and for shelf-life studies is:

- Time–temperature indicators (TTIs), monitoring the conditions during storage and transportation of the food products
- Leak indicators in modified atmospheric packaging (MAPs) monitoring the integrity of the food package

- Freshness or spoilage indicators monitoring the actual condition of the packed food product.
- Microbiological growth indicators monitoring the increase of the microbiological cell number or cfu.

All of these indicators, except for TTIs, are positioned inside the package and consequently they have to be considered as food contact materials (FCM).

In the United States, Japan, and Australia, smart packaging is already being successfully applied to extend the shelf-life food quality and safety. In Europe, the application of smart packaging systems is limited. The main reason for this is that until 2004, the legislative position of such food contact materials was uncertain.

One could raise the question, Who is waiting for these diagnostic sensors? Are they consumer-oriented or are they a desire of the retail or is it purely B2B (business-to-business)? Or is it purely meant for R&D purposes? The latter is certainly true as can be seen in the examples given in the following paragraphs. In our vision it is also clear that at this moment, B2B applications, like quality control in the food chain, will be the main application.

Because these diagnostic sensors in food packaging are at the moment not meant for checking the quality of the food product by the consumer, a visual detection of the sensor response is not strictly required. Therefore, the readout of the sensor could also be realized in an instrumental way, detecting features that cannot be observed by the human eye. This could be an optical scanner detecting optical changes in the sensor, such as fluorescence or absorption changes in the infrared region or the change in certain electrical properties.

Enabling technologies for discovery of markers and for (future) developments of diagnostic sensors in food packaging are advanced, comprehensive analysis for the discovery of food degradation markers, the integration with RFIDs (electronic version of noninvasive sensors), and the implementation of nanotechnology in new, innovative sensor concepts.

TIME–TEMPERATURE INDICATORS (TTIs)

These indicators or sensors are meant for those food products that easily deteriorates at higher temperature. The basic idea behind it is that they monitor the history of the temperatures at which the food product has been exposed. In fact they display an irreversible change, typically a color change, caused by both the time and the temperature.

In that way they should safeguard whether or not the food product has been exposed to high temperatures somewhere in the food chain, typically the cold chain. The “run-out” time of the sensor has to be correlated to the shelf life of each food product or groups of food products because the parameter time–temperature is only an indirect measure of the quality of the food product.

A major advantage of TTIs is that they can be attached to the outside of the package and as a consequence no food approvals are required here because they are not food contact materials.

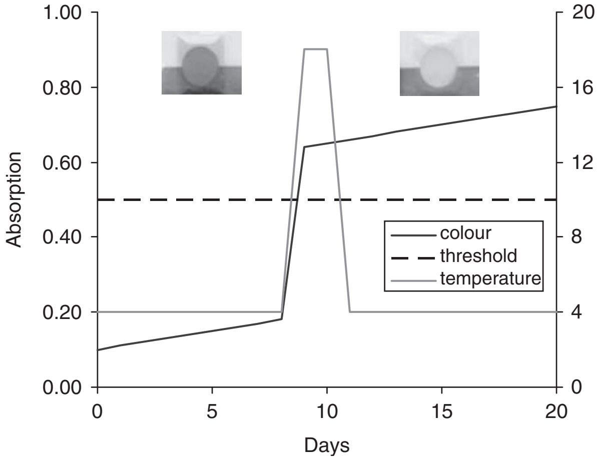

Figure 1. Schematic graph of the principle of operation of a TTI; color change from green (safe) to yellow (unsafe).

Principles used for this type of sensors are enzymatic reactions, polymerization reactions, and even microbiological responses. These irreversible reactions are, in general, coupled to a colorimetric change that accumulates in time and that can be detected visually (Figure 1). A number of companies are active in this field, such as Vitsab, Lifelines, Timestrip, and Cryolog.

Because these sensors behave in an accumulative way, the reagents have to be stored in separate chambers and the reaction has to be started or in other words the TTI has to be activated. This is typically done by means of a mechanical action.

Nowadays the introduction of RFID has raised the question, Can these electronic devices be used for monitoring the temperature history as well? Indeed, this is possible with so-called active RFIDs (RFID with internal power supply in the label) that are coupled to a temperature sensor. In contrast to the visual TTIs, they can tell us not only if the food product has been exposed to a high temperature, but also when this has happened because these devices log the temperature in time (at the moment with only a limited time resolution). A major drawback of these electronic devices, in particular active RFIDs, is that their cost price is still far too high to be applied in single food packaging.

LEAK INDICATORS

Nowadays, many packaging concepts are based on modified atmosphere packaging (MAP) that apply modified concentrations of oxygen, nitrogen, or carbon dioxide. Usually, low oxygen (O_2) or high carbon dioxide (CO_2) atmospheres are used to increase the shelf life of the food product of oxygen-sensitive products such as beer, meat, or pre-baked products. This clearly leads to a need for O_2 or CO_2 indicators that can be applied as noninvasive sensors inside the package.

These sensors could also be used for indicating microbial growth in the case of nonpermeable packaging

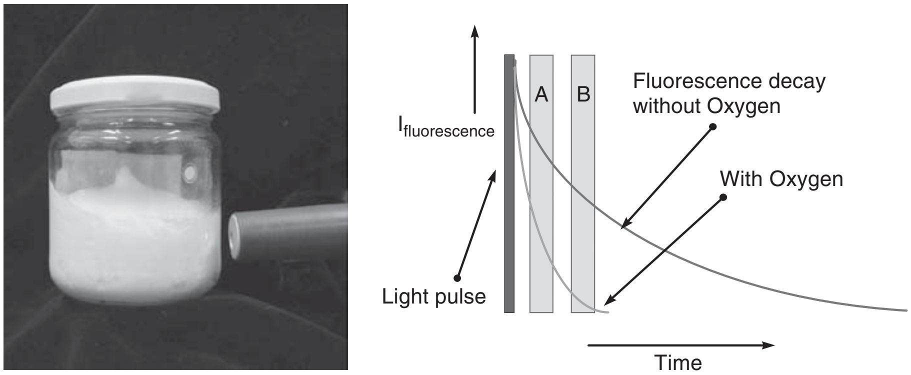

Figure 2. Sample with oxydot and reader pen (left), fluorescence decay curve (right).

material (e.g., glass). However, in flexible packaging the consumption or production of these metabolic gases will always be in competition with the ingress or losses through these materials.

Therefore the main application of O_2 or CO_2 indicators in packaging will be as leakage indicators to safeguard the integrity of the package (seal defects, pinholes) or to verify the efficiency of oxygen or carbon dioxide scavangers. The main application at the moment would be in B2B applications, in quality control at filling lines, and in R&D applications.

In the latter they could be used for gas permeation measurements, testing of packaging materials, or testing of packaging concepts (for instance, beer in plastic bottles). This could also be used in shelf-life studies or in studies measuring the rates of fat oxidation or of oxygen consumption by microorganisms.

TNO developed a noninvasive optical technique (2) that is based on the quenching of fluorescence of a dye embedded in a gas-permeable hydrophobic polymer by oxygen (Figure 2). This quenching also results in a change in the fluorescence lifetime of the dye. This effect can be recorded by an optical reader, also taking care of the illumination by means of a blue light-emitting diode.

The oxygen concentrations can be measured in liquids (e.g., dissolved oxygen) or in gas. Today this technique is being marketed as the Oxysense™ technique, enabling the detection of oxygen concentrations from ambient (21%) down to 0.01 mg/L in liquids or 0.02% by volume in gas. The sensor is independent of pH (2–12), is almost free of interference by other matrix components and the measurements itself does not consume oxygen.

Other noninvasive oxygen sensors, including those based on color or fluorescent intensity changes, have been described in literature. Commercially available systems for oxygen detection are currently provided by GSR/NCSR, Ocean Optics, PreSense, and Oxysense.

Noninvasive CO_2 indicators for food packaging, based on similar optical principles, are being developed at this moment in various research institutes. These are mainly sensors that make use of the permeation of carbon dioxide into a polymer with impregnated pH-sensitive dyes. These indicators can be color-based for visual detection or fluorescence based for instrumental detection (Figure 3).

DISCOVERY OF FOOD DEGRADATION MARKERS

For the development of smart packaging, which is able to monitor compounds correlating with freshness, quality, or safety, it is essential to have specific markers. A lack of specificity means that, for example, color changes indicating contamination can occur in products free from any significant deterioration. Therefore exact correlations appear necessary between target metabolites (indicators), product type, and (organoleptic) quality and safety. To find the appropriate marker, advanced analytical approaches in combination with food packaging research techniques allow obtaining insight in the key processes of food degradation. The combination of analytical techniques and food packaging research techniques such as gas permeability and optical oxygen measurements allow the selection of appropriate markers to avoid food degradation processes like lipid oxidation and growth of aerobic microorganisms.

To study more complex research issues such as off-flavor research, optimization and control of products, and aging or alteration of food during storage such as oxidation in complex food stuffs, more advanced analytical methods can be applied. The idea is to perform a comparative nonbiased determination of nearly all components in a broad range of polarity and molecular weight in a sample. This is in contrast to target analytical techniques as mentioned above, which aims at measuring a limited

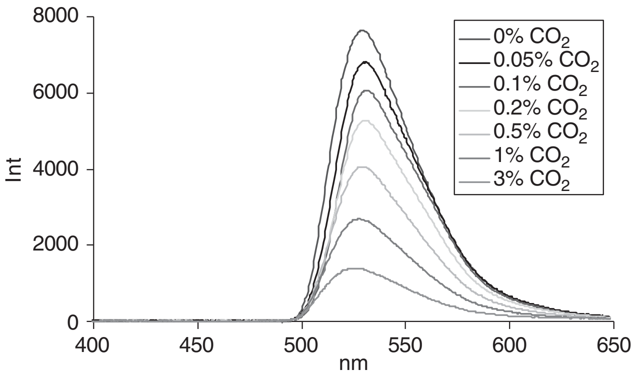

Figure 3. Spectra of the fluorescent intensity (green light) of a noninvasive carbon dioxide sensor excited by a blue polymer LED.

number of known parameters and/or compounds. Such comprehensive techniques are based on GC or LC coupled to mass spectrometry (MS). Next, data preprocessing tools and multivariate data analysis (MVA) are applied to find the relevant correlations between the analytical data with certain properties of interest (e.g., food degradation).

FRESHNESS OR SPOILAGE INDICATORS

Freshness indicators would be more ideal as, for instance, TTIs or leak indicators, because they also take into account the starting quality of the product as well as all "supply chain" mistakes. Real freshness indicators will indicate the actual freshness of the product instead of indirect measures of the freshness.

The freshness of a food product may express itself in certain metabolic products, gaseous or dissolved in the product. A freshness indicator that indicates if the product is not suitable for consumption anymore is referred to as a spoilage indicators. However, it is preferred if in an earlier stage an indication of the decrease of freshness is obtained. In that case we speak about a freshness indicator. Nearly all of the freshness or spoilage indicators are still in a development stage at universities, research institutes, or innovative companies. In general, it can be stated that gaseous metabolic products are less complicated to detect than dissolved metabolic products.

Issues that also play an important role here are microbiological quality and sensory quality.

EXAMPLES OF SPECIFIC PARAMETERS THAT CAN BE USED FOR FRESHNESS OR SPOILAGE INDICATORS

Specific Parameter/Marker	Food Product
Volatile amines	Fish
H_2S	Poultry
Ethanol, ethylene	Vegatables, fruit
Acetaldehyde	Yogurt, fruit
Hexanal, butyric acid	Salads (oils, fats)
ATP	Meat, fish
CO_2	Meat (salads)
Toxins	Meat (salads)

An important safety issue—in particular, in the case of (raw) meat products—is the monitoring of toxins or the pathogenic microorganisms such as *Salmonella* or *Campylobacter* that produce these toxins. Some attempts have been made to accomplish this, like the immunochemical detection principle for toxins by Toxin Alert.

The key challenge for toxin indicators is that pathogenic microorganisms generally exist in or on a food product at very low concentrations which can already be dangerous for humans. In addition, they are not homogeneously distributed throughout the whole food. Consequently, an indicator or sensor for toxins has to be extremely sensitive and needs to have a contact area with the food as large as possible. For all of these reasons, it is not likely that toxin indicators will become available in the near future.

Other, more realistic examples are, for instance, indicators for H_2S, volatile amines, ethanol, ethylene, or volatile carbonic acids.

A useful freshness indicator for poultry has been developed by VTT in Finland based on the color change of myoglobin from brown to green in the presence of the marker H_2S.

Ethylene is a useful indicator for the ripeness of most fruits. Colorimetric indicators for this parameter are under development by several institutes (e.g., RipeSense™).

Another good example is the freshness indicator of fresh-packed fish products (Figure 4). This indicator can be specifically based on the amount of trimethyl amine (TMA) formed by the bacterial reduction of trimethyl amine *N*-oxide (TMAO) or, less specifically, on the total volatile base concentration (sum of basic reduced nitrogen gases, including ammonia). These indicators have to be validated for specific type of fish products (e.g., fatty or nonfatty fishes) and they have to be sensitive enough to predict the shelf life on a reliable basis. The latter implies that they have to be able to monitor TMA or TVB (total volatile base) on a ppm level. TNO has developed such a sensor based on a visual detectable color change from green to blue of a few ppm of either ammonia or trimethyl amine.

Another indicator from TNO being in the same category as the volatile base indicator is the one based on the sum of volatile carbonic acids, as a measure of rancidity for fatty products such as salads, that change color from purple to blue.

A special kind of freshness indicator is a so-called microbial growth indicator, because this will display the freshness of the product by means of the number of microorganisms present in the food product in stead of specific (chemical) parameters formed in the product or in the headspace of the packaging. Such an indicator has to be nonspecific with respect to the type of microorganism, and it could be useful for monitoring the overall freshness of meat products.

Such a nonspecific sensor is under development at TNO (3). This development started for sterile products in closed, aseptic containers (for instance, in case of tissue engineering or clinical food) where the indicator only tells whether or not the product is (still) sterile (see Figure 5). In most food applications, however, sterility is not an issue and the indicator has to display the growth instead of the presence of microorganisms.

This particular indicator or sensor is based on the assumption that microorganisms will produce certain extracellular enzymes, such as proteases and amylases, which can be detected by means of a color change or by means of a chance in fluorescent properties of the indicator. Because the applied principle is cumulative, the indicator will not only be able to detect low levels of initial growth, but will also hold its value after the logarithmic growth phase of the microorganisms.

In the graph in Figure 6, it can be seen that the sensor, more or less independent of type of microorganism, will only depend on its growth rate and on its capability to produce external enzymes like, in this case, proteases.

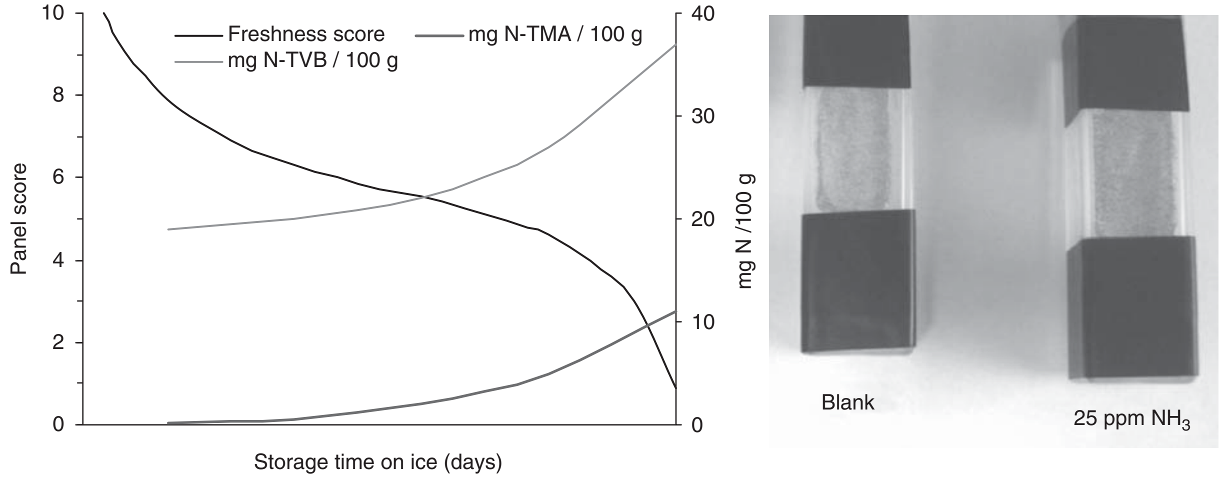

Figure 4. Freshness indicator for freshness of fish products based on total volatile base detection.

LEGISLATION

The EU is the only region in the world which has legislation specific for smart packaging substances. However, delays in drawing up the legislation have hampered the introduction of smart packaging (especially for releasing systems) in Western Europe food markets. A European Commission funded project [FAIR-project CT-98-4170 (4)] known by the acronym ACTIPAK came up with recommendations that were taken up in the drafting of amendments to the EU Framework Directive for food contact materials 89/109/EEC (5). This resulted in the adoption of a new framework Regulation (1935/2004) (6) in which provisions are made to allow the use of smart packaging systems. The new Regulation applies to smart packaging, containing deliberately added substances, provided that the packaging can be shown to enhance the safety, quality, or shelf life of the packaged foods or provides information on the conditions of the packaged food. A major provision is that the composition of food may be changed by the use of active packaging, provided that the final food complies with relevant rules on food and food additives. However, such changes should never result into the masking of spoilage or misleading the consumer. The Regulation (1935/2004 is valid in all EU Member States without a need for implementation in national laws) announces additional rules laid down in a specific measure. At the moment a specific regulation [EMB/973 Rev. 6B (7)] for smart packaging is being drafted and discussed with the Member States. The final regulation most likely will not differ significantly from the document now available. However, the extent of the authorization procedure is still open for discussion. It is clear that any authorization will only be related to the substance(s) that cause the smart function. Inert parts of a smart packaging (i.e., a sachet, box, foil) will remain the responsibility of the manufacturer. The inert part should comply with the rules for food contact materials valid at EU or national level [e.g., Directive 2002/72/EC (8)].

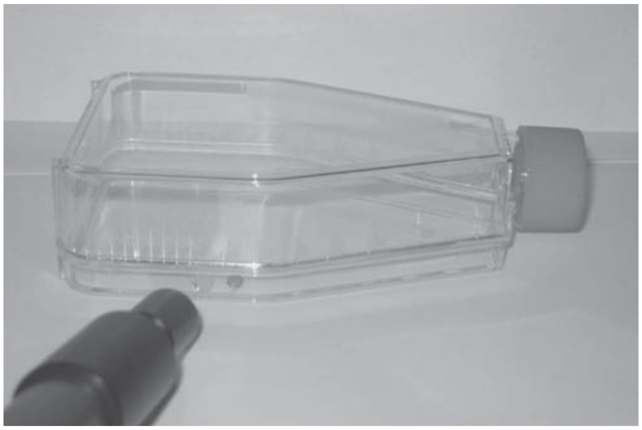

Figure 5. Photograph of a noninvasive sensor for sterile products with optical readout.

In addition, some of the systems are subject to regulations on food additives, labeling, environment/waste, food hygiene, and general safety. The EU system requires the opinion of the European Food Safety Authority (EFSA) before it can be inserted in any regulation. Therefore, the smart components need to be evaluated by the EFSA for its safety in food contact applications. EFSA guidelines are under preparation but may be adapted to the final specific regulation for smart packaging. The following issues will (most likely) be part of the guidelines:

- Toxicological evaluation of the smart components, taking into account the potential level of migration into the food.
- Demonstration of efficacy of smart materials is under discussion. Because this is not a safety issue, in many cases, the need for a demonstration of efficacy may be reduced or completely withdrawn. In those cases it is a up to the user to ensure that the smart packaging is efficious. However, the requirement in the Framework regulation that the consumer should not be misled may be a reason to check the efficacy even in the absence of a health risk

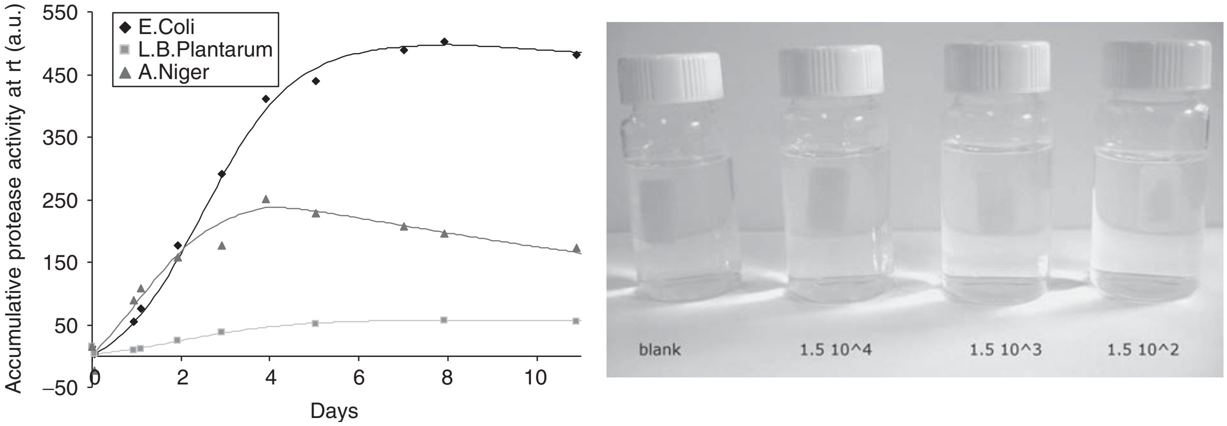

Figure 6. Proof-of-principle with a fluorescent indicator (left) for different microorganisms. Quantification of a color indicator (right) for various protease.

- Migration data regarding the smart component. Conventional migration methods may not be applicable, and dedicated migration methods may be required to demonstrate that migration of smart components does not endanger human health.
- Advise to the Commission for insert of the smart component in a list of authorized components.

Based on the outcome of that evaluation, the Commission (DG SANCO) will grant a petitioner, authorization for the submitted smart systems, which will be entered in the Regulation. The general requirements for food contact materials (1935/2004/EC (6)) also apply to smart packaging systems and, consequently, they shall not endanger human health. Labeling should comply with the food additive Directive89/107/EEC (9).

TRENDS

Presently, diagnostic sensors are mainly applied in the business-to-business (B2B) market in the form of TTI indicators to monitor the storage conditions of temperature-sensitive products. However, TTI is only an indirect measure of food quality and is not likely to replace the "best-before" dates.

The main drivers in packed food for the near future will be food safety and quality of fresh products. This implies that there will be a need for freshness, microbial growth, and toxin indicators. In this respect, it will be essential that the indicators provide a clear, unambiguous indication of product quality, safety, and shelf life. Probably all new diagnostic sensors will first be used in B2B applications with a some form of added value. It could be used as a quality indicator or shelf-life indicator, removed before presenting the products to the consumer, or invisible to the consumer. If the retail can guarantee that no pathogens are present in meat, this will give added value to the product. It would, for instance, allow the retailer to sell higher-value raw meat products. Or by improved selection and order picking directed by the shelf-life indicator, replacing the principle of "first-in first-out" by picking on remaining shelf life, the shelf life could be increased. An additional shelf-life day is absolutely a very interesting business driver for fresh products.

Nanotechnology will be more and more applied in the development of new freshness and toxin indicators, enabling more sophisticated and more selective sensor principles.

Also the combination with electronic devices, such as RFID and polymeric electronics, will expand the possibilities of diagnostic and intelligent packaging in future. A major demand for these devices will be the breakdown of cost price.

Currently, the market for diagnostic packaging is small compared to the more mature market of active packaging. However, we believe that the overall trend for diagnostic packaging will be a growth scenario.

BIBLIOGRAPHY

1. S. Gunasekaran., ed., *Nondestructive Food Evaluation*, Marcel Dekker Inc, NewYork–Basel, 2001.
2. A. Draaijer, Optical Sensor for Measuring Oxygen, WO 01/63264, August 30, 2001.
3. J. J. F. van Veen; Method for the Non-invasive Detection of Micro-organisms in Closed Containers, WO 04/024945.
4. FAIR-Project PL 98-4170. "Actipak": Evaluating Safety, Effectiveness, Economic–Environmental Impact and Consumer Acceptance of Active and Intelligent Packaging, *Duration* 1998–2001. Final report: 2003.
5. Council Directive 89/109/EEC of 21 December 1988 on the approximation of the laws of the Member States relating to materials and articles intended to come into contact with foodstuffs, *Official Journal*, **L040**, 11/02/1989, 0038–0044.
6. Regulation (EC) No. 1935/2004 of the European Parliament and the Council of 27 October 2004 on materials and articles intended to come into contact with food and repealing Directives 80/590/EEC and 89/129/EEC, *Official Journal of the European Union* **L338**, 13-11-2004, 4–17.
7. Working Document on a Draft Regulation on active and intelligent materials and articles intended to come into contact with foodstuffs. Version updated to 16 June 2006; EMB/973 Rev. 6B.

8. Corrigendum to Commission Directive 2002/72/EC of 6 August 2002 relating to plastic materials and articles intended to come into contact with foodstuffs (*Official Journal* **L220**, 15/8/2002, 0018–0058), *Official Journal* **L0392**, 13/02/2003, 01–42.

9. Council Directive of 21 December 1988 on the approximation of the laws of the Member States concerning food additives authorised for use in foodstuffs intended for human consumption (89/107/EEC), *Official Journal* **L040**, 11/02/1989, 0027–0033.

DISTRIBUTION HAZARD MEASUREMENT

Dennis E. Young, CPP
School of Packaging, Michigan State University, East Lansing, Michigan

To be successful in the marketplace, products must be available to consumers. Most manufacturers produce products in one or several central locations, gaining the efficiency of larger scale operations. Markets and consumers, however, are far less concentrated and are located in widely separated areas, even thousands of miles away from the point of manufacture. This characteristic of most producers and consumers generates the need for physical distribution, which represents a key part of the supply chain system of any manufacturer. As global markets open and distribution channels grow in length and complexity, logistics takes on increasing importance.

Physical distribution in its simplest form combines three related logistic activities. Transportation moves products from point to point using a plethora of modes and equipment. Warehousing buffers the uncertainties of production and demand and helps ensure availability to satisfy demand. Handling connects the elements of the system, which include production to warehouse, warehouse to truck, truck to retail, and so on. Each element includes hazards to the safe passage of products and packages. In each case, the hazards are characteristic of the operations performed within that distribution element. All these activities also occur in an atmosphere that may change the results of the activities. Temperature and moisture, for example, can affect the characteristics of packaging materials, which compromises their protective ability.

Transportation requires vehicles, and vehicles produce vibration as a consequence of their motion. The discontinuities of transit media, such as road roughness, rail irregularities, water waves and air currents, are among the original sources of vibration. The vehicle reacts to these irregularities, amplifying some types and reducing other types. Vehicle suspension and structure play a role in vibration modification. The result is a complex mix of vibration frequencies and intensities, which change in response to immediate conditions. Figure 1 shows an example of actual vehicle vibration, demonstrating the change of vibration intensity over time. These transit vibrations may produce fatigue, abrasions, crumbling, separation, and other types of damage in products and packages.

Warehouses gain efficiency by the careful use of space. This usually involves stacking one product and package on another to fill the available storage cube of the building. Unit loads of products may be stacked several items high in floor loading warehouses. Even with storage that uses

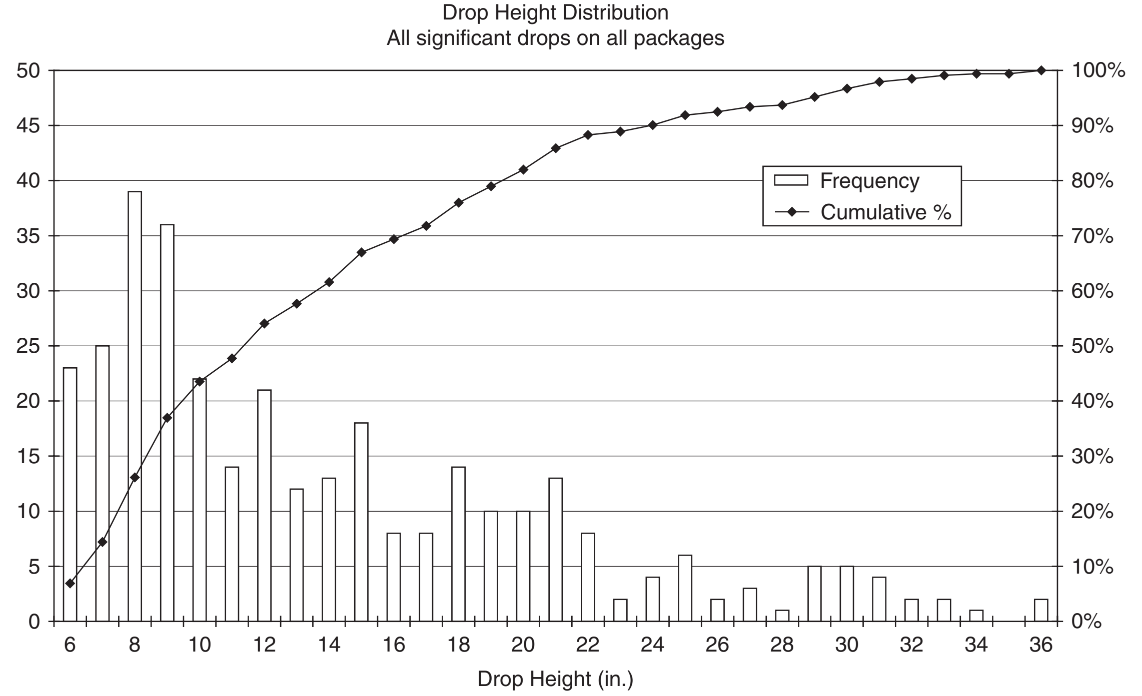

Figure 1. Example drop height distribution data.

racks to contain packages and unit loads, stacking often occurs, albeit with lower heights. The loads imposed on packages by the warehousing system can exist for weeks or even months. These warehouse loads may produce collapse, denting, buckling, bending, and other types of damage in products and packages.

Handling operations include the manual movement and placement of packaged products in sorting, transferring, and vehicle loading and unloading. Persons are often assisted by mechanical tools in this handling, including lift trucks, dollies, conveyors, and similar devices. Some handling operations are fully automated and use robotics or purpose-built devices to lift and place packages. Vehicles are also handled, and vehicle impacts such as railcar switching and truck docking may be hazardous. Inherent in handling is the possibility of accidental or purposeful drops, including severe mishandling. The shocks experienced by the product and package when dropped in handling may produce breakage, shatter, bending, misalignment, chipping, and other types of damage in products and packages.

Along with packaging material performance and product fragility, knowledge of the hazards of distribution is critical to successful protective packaging development. Data on package drops, vehicle vibration, compressive loads, and atmospheric conditions are central to determining the target performance of packages. If the general probability of occurrence of these hazards is known, then intelligent decisions on level of protection are possible.

Small, battery-powered instruments capable of accurate measurements and recording of transit hazards are available from several manufacturers. Instruments that can measure shock, drop, impact, and vibration usually employ accelerometers, or acceleration transducers. Likewise, instruments for detecting compressive loads would use some version of a load cell or weighing transducer. Temperature and humidity measurement requires appropriate sensors. In all cases, power from batteries and signal conditioning matched to the sensors are needed. Data are converted from the continuous or analog form into small, discrete steps by internal electronics. This analog-to-digital conversion (ADC) allows the data to be stored and understood by digital devices, including computers. Once detected, hazard data are stored in computer-compatible memory within the instrument, which is available for eventual transfer to a personal computer for analysis.

The process of measuring the hazards of distribution requires careful planning. The following steps are recommended:

- Observation
- Measurement
- Analysis
- Specification
- Validation

The first step to a quantitative understanding of supply change distribution hazards is qualitative. Observation of the distribution system details the elements of distribution, such as handling, transit, and warehousing, and it assists in understanding how these pieces fit together into a system. Attention should be paid to possible sources of handling drops or impacts. A block diagram of how a package travels from manufacture to consumption is a useful tool to develop. With these observations, targets for the measurement step may be selected. A certain handling operation, or a transportation mode or route, or an entire trip or system, may be selected. Independent variables, such as position in the vehicle or weight of package may be targeted at this stage. Much may be learned from observation alone. Although largely qualitative, the information gained is valuable to establish the order of events and the specific characteristics of equipment (vehicles, conveyors, etc.) and process (unloading, sorting, loading, etc.).

The measurement step concentrates on qualitative data collection. The location of the measurement system and transducers is critical at this point. Measurement needs to be taken at a point where eventual tests will be controlled. For example, if the goal is a vibration test, then the test system will be taking the place of the vehicle bed, as this is the point of input to packages transported in the vehicle. The test system will be programmed to simulate the motion of this vehicle. Accordingly, the measurement system must monitor the vehicle bed. Measurements taken of the response vibration, inside the packaging, will be interesting for package performance characterization but are not specifically useful for the development of test specifications.

Drop height data are collected by an instrument inside of the package that experiences the drop. Data on compressive load would also be taken by inside-package instruments. Shock and impact data-collection points depend on how the eventual test will be controlled. Temperature and humidity data may be taken at any point but with due consideration of the mitigating effects of the package.

All data types should be time stamped and date stamped when collected if possible. This allows the user to evaluate the location of each data event, which includes the truck terminal, warehouse, road or rail section, flight number, or loading dock. Small parcel tracking and vehicle global positioning system (GPS) information are tools to help interprete the data collected.

The analysis step focuses on converting raw data to information. Data from an electronic recorder are organized and stored by events as individual readings or packets of time. Slowly changing data, such as temperature, atmospheric pressure, or relative humidity, may be sampled by individual readings. Dynamic data, i.e., shock and vibration, need to be captured in time packets so that the rapidly changing nature of the original event may be observed. Drop heights may be estimated by the instrument software, and vibration data may be sorted for frequency content.

Data analysis should begin with a careful consideration of the goal of the measurement program. Temperature and relative humidity data help to define the exposure to extreme levels, the time of exposure, and how exposure changes over time and with the distribution situation.

These data can be used to develop laboratory tests or to assess the degree of hazard to product or package.

If the goal is the development of a random vibration test, then spectral analysis is the typical form. If data taken by a recorder inside a package are to be used to set up a drop test specification, then data analysis should include the number of drops, orientation of drops, and drop-height distribution. A useful form of data analysis for drop-height distribution is a drop-height histogram with cumulative percentages. Figure 1 shows an example from handling drop data collected in shipments by a parcel delivery mode (1). Similar results have been obtained in less-than-truckload (LTL) domestic shipments (2) and in many other studies.

Figure 2 shows a summary analysis of truck vibration in a truck distribution environment, in this example, a large semitrailer on intercity roads in China (3). In all these examples, the information should serve as illustrations of analysis form and content, not as definitions of these shipment conditions.

One key advantage of laboratory testing is the ability to compress time in the evaluation of package performance. A shipment that might take several days of elapsed time can be simulated in the laboratory in a matter of hours. The specific technique for time compression depends on the test being performed.

Time compression for drops is clear. The time between drops in actual shipment may range from minutes to days. In the laboratory simulation, drops are conducted with minimal waiting time, so the elapsed time is compressed. The time compression for top-load compression tests to simulate the effects of long term storage in a short test time is being developed by some users.

Time compression for vibration is more complex. In general, increased test amplitude intensity (G level) may be traded for reduced time. There are undoubtedly practical limits to such compression. A shipment of 20 h transit time probably cannot be effectively simulated in 10 min. Random vibration test durations of one to $\geqslant$6 h may prove successful in replicating field damage. Shorter or longer vibration test durations may be required to achieve desired results. The default vibration time of 3 h used by ASTM D4169 is suggested as an initial target International Safe Transit Association (ISTA) links test time and transportation distance using a similar relationship. The ISTA process relates test time to transportation distance. For example, a palletized load would be tested in one axis for *time = miles traveled/5*, with a maximum time of 240 min (5). There are several approaches to vibration time compression. Among these is the following generalized approach. Within limits, the trip time may be compressed to laboratory time using the following relationship, which was adopted from test equivalence formula (6):

$$L_2 = L_1\left(\frac{T_1}{T_2}\right)^a$$

where

L_2 = level of lab test vibration (overall G_{rms})
T_2 = time duration of lab test
L_1 = level of field measurement (overall G_{rms})
T_2 = time duration of field measurement
a = exponent, typically 0.3–0.5

Test specifications should also include consideration of the diversity of distribution environment hazard levels. For example, a series of drop heights should be constructed to

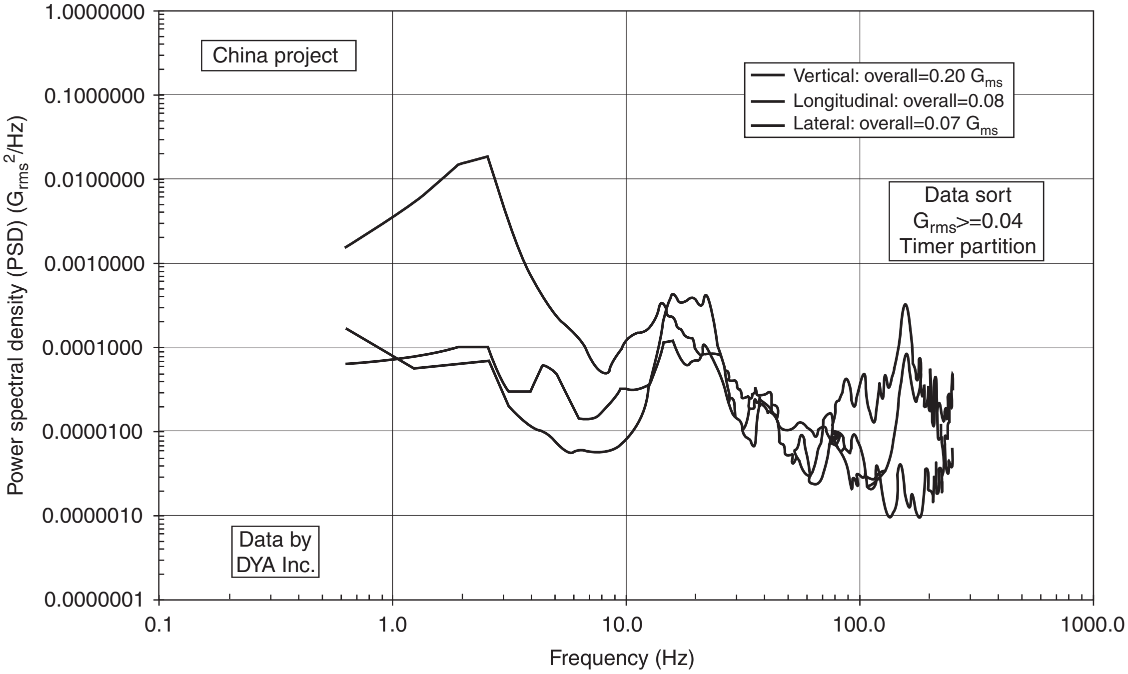

Figure 2. Example random vibration spectrum date.

reflect the actual occurrences measured in the field. Rather than a series of drops all at the same drop height, a series should be constructed with different drop heights, because that is how drops happen in actual handling. Such a series might include several low heights, a few midlevel drops, and one high drop. This is modeled on the actual hazard, where high drop heights occur seldom, and lower drops occur more often.

This level diversity technique is also valuable for vibration testing. Data may be sorted by event amplitude and grouped. The estimated actual time that vibration occurred at each group level is then calculated. One background level, which reflects most events recorded may be combined with one of more higher level tests of shorter durations. The time compression may be applied to some or all test segments that result. This multilevel test specification should provide a more robust simulation of the logistic environment hazard than a single-level test.

The validation step is a potentially time-consuming, but necessary, effort. During validation, the user compares actual field results with laboratory results and makes any required adjustments. This may include selected testing of products with known shipping histories. Of particular interest would be products that have exhibited repeatable, definable damage during transit. A laboratory test that produces similar results is the goal. If the test specification under development achieves this end, then it has demonstrated a degree of validity. A several such test cases will increase the validity and confidence in this specification. In general, exercise caution when using new test specifications that have not undergone validation, especially in the evaluation of new products and packages where no history is available.

All stages of the process, from observation through validation, should be documented carefully. In this way, future users may extend the development process to new logistical operations or assess the need for additional measurement and analysis efforts.

BIBLIOGRAPHY

1. D. Batz, and D. Young. "The Lighter the Package, the Higher the Drop and Other Packaging Myths," *Proceedings of Dimensions 06, ISTA*, East Lansing, MI, 2006.
2. S. R. Pierce and D. E. Young, "Package Handling in Less-Than-Truckload Shipments: Focused Simulation Measurement and Test Development," *Proc. IoPP Educational Symp. Transport Packaging*, IoPP, Herndon, VA, 1996.
3. Young, D. and T. Baird. "The China Project," *Proceedings of Dimensions 04, ISTA*, East Lansing, MI, 2006.
4. ASTM International, *2008 Annual Book of ASTM Standards*, Vol. 15.09, ASTM International, West Conshohocken, PA, 2008.
5. International Safe Transit Association, *Project 3B,* International Safe Transit Association, East Lansing, MI, 2009.
6. A. J. Curtis, N. G. Tinling, and H. T. Abstein, *Selection and Performance of Vibration Tests, SVM8*, p 97, The Shock and Vibration Information Center, USDOD, Washington, DC, 1971.

DRUMS, FIBER

Gerald A. Gordon
Sonoco Products Company,
Industrial Container Division,
Lombard, Illinois
Updated by Staff

INTRODUCTION

A fiber drum is a cylindrical container made with a sidewall made of paper or paperboard having ends and components made of similar or other materials such as metal, plastic, plywood, or composite materials. It is made by the convolute (not spiral) winding of multiple plies of paperboard into a tubular body, to which are attached headings that may be made from solid fiberboard, metal, plastic, natural wood, or plywood. No single ply of the sidewall may be less than 0.012 in. (0.30 mm) thick. The sidewall plies must be firmly glued together and may include protective layer(s) of metal foil, plastic, or other appropriate materials. The outer ply may be waterproofed, or, at the least, must be sized to resist the effect of casual water. Fiber drums provide high strength and low tare weight for the packaging of industrial commodities. A fiber drum intended for heavy-duty use may weigh as little as half that of a comparable steel drum.

Fiber drums are used globally and offer a strong, cost-effective means for the packaging of solid granular powder, paste, semiliquid, and liquid products. Fiber drums were originally introduced as an alternative to the metal drum and therefore had a circular cross section. In recent years, drums with a square cross section and rounded corners have become available. Fiber drums make up about 30% of the industrial containers used in the United States (1).

CONSTRUCTION

Sizes

Fiber drums are manufactured in a wide range of diameters and capacities: in diameter from about 8-in. (200 mm) to 23 in. (584 mm) in $1\frac{1}{2}$-in. (38-mm) increments, and in capacity from 0.75 gal (2.8 L) to 75 gal (285 L), with almost infinite variability, since capacity is controlled by the slit width of the tube, which can be adjusted in $\frac{1}{8}$-in. (3-mm) increments.

Stacking

The stacking strength of a fiber drum is determined by the number of plies of paperboard in the sidewall. This commonly varies from 4 plies for lightweight drums to 11 plies for large drums intended to carry heavy loads (these ply counts are for 0.012-in. board; the increasingly common use of heavier board requires fewer plies). The stacking strength is also a function of the moisture content of the paperboard; the higher the humidity, the lower the stacking strength. Taking these and other construction factors into account, the bottom drum in a stack of large, heavy-duty fiber drums might safely support as much as 2000 lb (900 kg).

Linings and Barriers

The basic structure of a drum may be modified by the insertion of a laminated barrier board (a sandwich made from aluminum foil and/or polyethylene between two plies of lightweight paperboard) into the sidewall to reduce the moisture vapor transmission rate (MVTR). Alternatively (or sometimes additionally), a laminated integral lining made of paperboard, plastic film, and sometimes aluminum foil may be used as the interior surface of the tube, to impart MVT resistance, oxygen transport resistance, and/or chemical resistance to the drum. The plastic part of such a laminated lining may include polyethylene (as barrier layer or as adhesive for a different barrier), polyester, poly(vinyl alcohol), silicone release lining, or a laminate of a special barrier polymer with polyethylene. A lightweight polyethylene lining or a loose polyethylene bag is also frequently used in the packaging of dry products to reduce MVTR. A “skin” (pigmented polyethylene-coated board) or label (decorated stock) may be wound as the outside ply of the drum, with the colored plastic or decorated stock to the outside, to provide protection from moisture or physical abuse, or to project information, using the drum surface as a “billboard.”

Table 1 shows that the MVTR of fiber drums may vary over a factor in excess of 300, depending on lining or barrier construction.

Adhesive

The adhesive most commonly used in the manufacture of fiber drums is sodium silicate, or water glass. Silicate adhesive has the advantages of low cost and general effectiveness, but the disadvantage of being water-soluble, and therefore producing drums with poor water resistance. Thus, a silicate drum subjected to a 5-day exposure in a water-spray test will lose about 90% of its stacking strength.

Table 1. Water-Vapor Transmission Rate of Chime-Style Fiber Drums[a]

Construction	Weight Increase
Silicate adhesive, no lining	10,000+ (est.)
Silicate adhesive, polyethylene barrier (0.7 mil)	600
Silicate adhesive, polyethylene lining (2 mils)	350
Flame activated polyethylene adhesive, no lining	175
Silicate adhesive, aluminum-foil barrier	125
Silicate adhesive, polyethylene/aluminum foil lining	30

[a] Total weight increase of a desiccant inside a 55-gal fiber drum with rubber gasketed steel cover, in grams of water per 30 days, with the drum exposed to 100°F and 90% RH. The values listed above are for comparative purposes only and should not be understood as absolute values that would be picked up by a specific product.

For drums requiring moisture proof capability, poly (vinyl acetate) (PVA) is used. There is also use of poly (vinyl alcohol) and dextrin. The main requirements for the adhesive are good wet tack and a quick setting speed. It is important to use an adhesive with high solids content to ensure that the amount of water added, as a consequence of using the adhesive, is kept to a minimum.

Lids

Fiber drums are known as open top drums. This means they have a lid that matches the diameter of the drum. The lid can be made of wood, plastic, steel, or fiberboard. The lid is held in place with a metal band, normally steel. Tight head drums have tops that are permanently fixed to the body. These drums are made only from plastic or steel. Steel lids are used in high performance specifications. Tight end drums are used for liquids and semiliquid products. Depending on the global manufacturer, there is a preference for the lid material. In the United Kingdom, the popular choice is plastic (polyethylene). In the United States the choice is split between plastic and fiberboard. In order to assist in the stacking of drums and in the stability of the stack of drums, it is usual for the lids to be designed in such a way that they locate within the base chimes of the drum on the next layer. For drums that require an airtight seal, a gasket is incorporated into the plastic or steel (1).

DRUM STYLES

Drums with Metal Chimes

Figure 1 shows the most common style of fiber drum, with metal chimes on the top and bottom of the drum. These chimes are mechanically formed during drum assembly to attach the bottom heading to the sidewall (bottom inset) and to provide an attachment site for a toggle-action locking band to hold the cover onto the drum (top inset). This drum style can provide the highest level of abuse resistance and product protection by a fiber drum. Many variations are commercially available for this versatile drum style.

Drums for Packaging Liquids

If made with an interior lining, caulking compound in the bottom juncture, and a gasketed steel or, preferably, plastic cover, a metal-chime drum can be used for the packaging of liquids, ranging from self-sealing latex adhesives to water-based chemical solutions, to solvent-based cleaners and fiberglass gelcoats. Such drums can also be provided with a spun-on locking band to produce a tight-head drum that provides an even better top seal. The use of fiber drums to package liquids has grown significantly with advancements in lining materials and manufacturing processes that have expanded the holding capabilities of the drums.

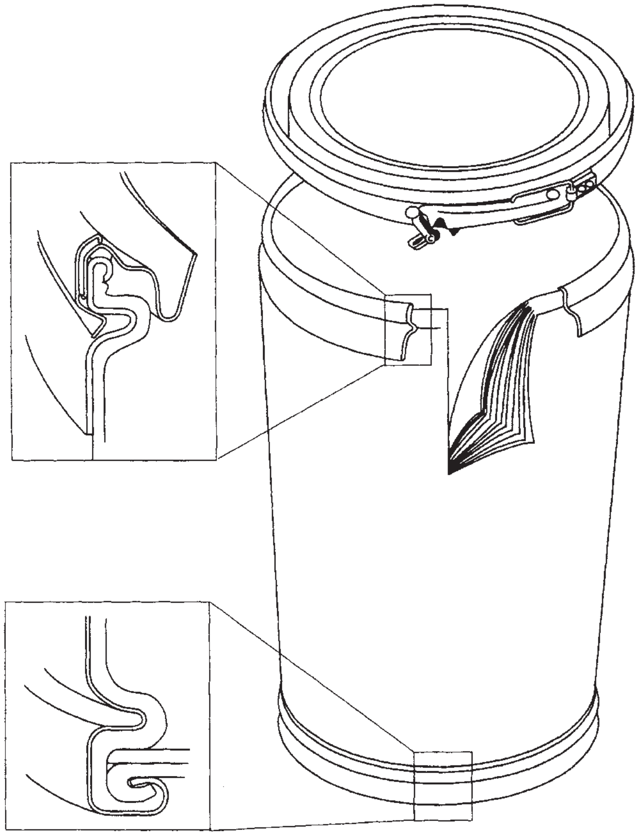

Figure 1. Drum with metal chimes.

Composite Fiber Drums

Figures 2 and 3, respectively, show open-head and tight-head composite fiber drums intended for the packaging of liquids. Some drums have a self-supporting plastic insert, or inner receptacle, inside each drum to contain the liquid. The inner receptacle is an integral part of the packaging and is filled, shipped, and emptied as such.

Straight-Sided Drums

Figure 4 shows the straight-sided chime of a drum intended for the packaging of hot-melt adhesives and other products that are dispensed by use of a platen pump. Since a close-fitting platen must slide into the drum to dispense the product, the inverted groove design typical of other drums with metal chimes cannot be used. Instead of reducing the diameter at the groove to provide purchase for a lock band as in the standard design, the chime and fiber tube of a straight-sided drum must be expanded outward by about 8%. Since paper typically can be elongated only about 3% before failure, the development of this drum style was not a simple task. This drum style may also be made with two tops (i.e., two removable headings) so that when the platen pump has removed as much product as it can reach, the drum may be inverted, the bottom removed, and the residual heel removed and placed on top of the next drum for dispensing.

Drums for Packaging Wire

Figure 5 shows a drawing of a drum designed for the packaging and dispensing of wire. The drum is made with a central core, around which the wire is coiled and from which it is dispensed.

Drums for the Aseptic Packaging of Foods

The aseptic packaging of foods at ambient temperatures requires a containment system that provides a good barrier to both oxygen and biological contaminants that might cause food spoilage. In this system the food is packaged in a high-strength polyester/polyethylene/aluminum-foil bag, which is then placed inside the drum. The drum itself is of heavy-ply construction, frequently using weatherproof adhesive, to allow outdoor storage. The drum functions to provide protection from mechanical abuse and moisture. The bag provides the barrier to chemical and/or biological degradation of the food (see also Aseptic Packaging).

Drums without Chimes

Figure 6 shows the simplest of drum designs: a fiber tube with steel or plastic headings attached by stitching, taping, adhesively bonding, or the use of mechanical clips. The top and bottom headings are designed to interlock to facilitate stacking. This inexpensive drum design, generally with an inner polyethylene bag, is commonly used for the packaging of such low-cost products as detergent and ice-melt compound in relatively small sizes.

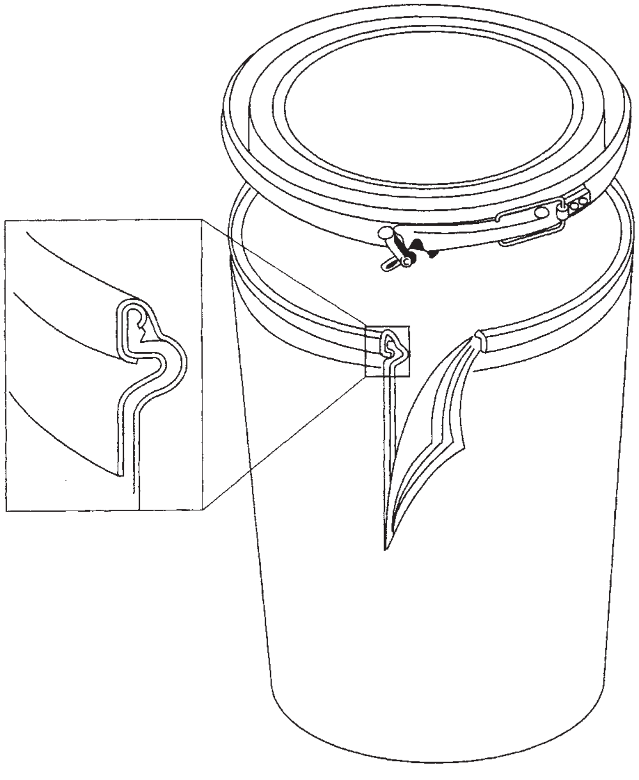

Figure 2. Open-head composite fiber drum.

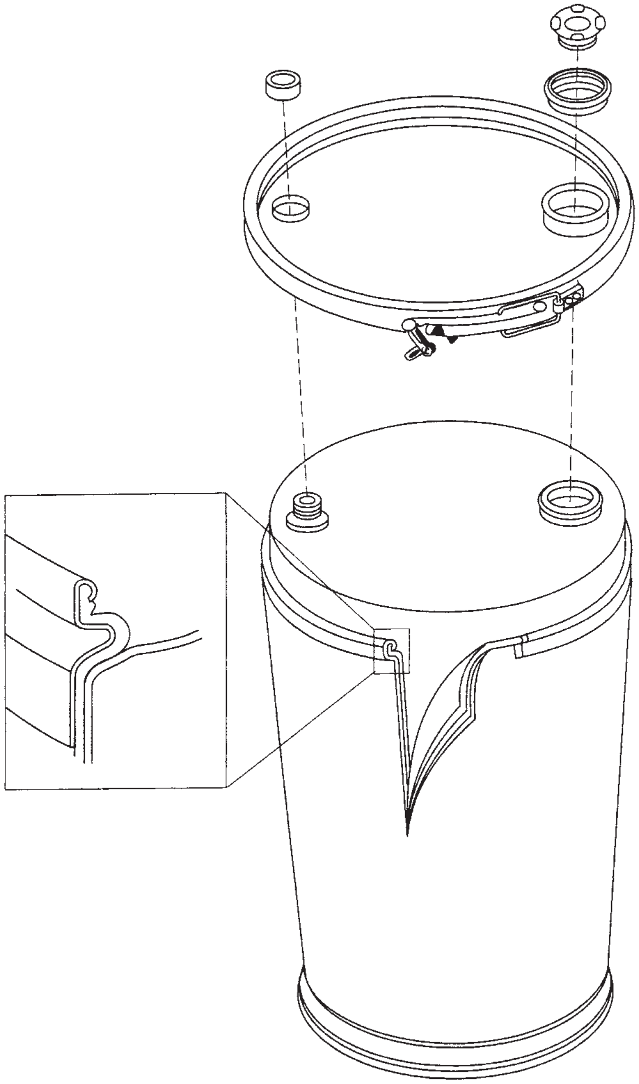

Figure 3. Tight-head composite fiber drum.

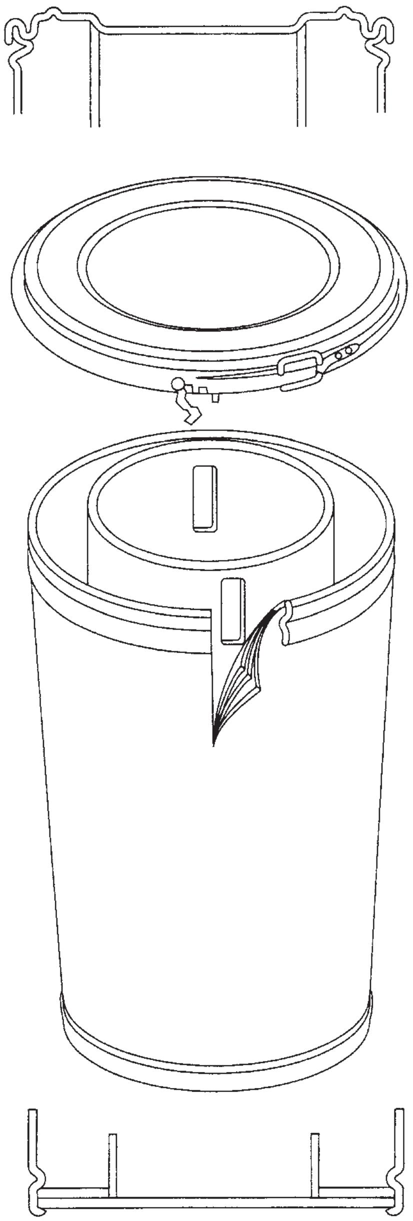

Figure 5. Drum for packaging wire.

Nestable Fiber Drums

A striking variation of this drum style is a nestable fiber drum. A frustroconical tube is made by the winding of precut sheets of paperboard, one for each ply. An integral polyethylene lining and plastic headings (adhesively bonded on the bottom, taped on the top) complete the structure. The advantage of this construction lies in the reduction of shipping cost and storage space for empty drums, but at the sacrifice of some stacking strength. This drum design was developed for the storage and transport of hazardous medical waste for incineration.

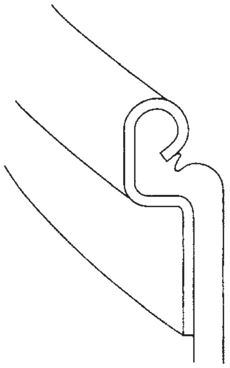

Figure 4. Crimp of straight-sided drum.

All-Fiber Constructions

Drums made only from fiberboard have somewhat greater structural integrity than do the chimeless drums described above. As shown in Figure 7, in the manufacture of such drums the bottom-end portion of a tube is notched and/or folded in and is then covered inside and out with fiber disks that are stitched and/or glued to produce a

Figure 6. Drum without chimes.

strong and secure heading. Covers, designed for slip fit, are made in the same way, but from a short piece of tube.

Drums of this style are available in several design variations. The simplest has a drum bottom with a cover of somewhat larger diameter, which slides over the drum, leaving a step or ridge at the juncture between cover and drum. The cover is often taped in place, but this may leave an unsightly ridge. This drum design can also be made with a tube and two covers, often used for the shipment of rolls of plastic or other materials that need protection to prevent damage to the roll edge.

In a somewhat stronger all-fiber design, the drum body is composed of two components (Figure 7): a tube that is glued into a somewhat shorter shell of somewhat larger diameter. The cover, having the same diameter as the shell, slides on over the exposed portion of the tube, leaving no ridge at its juncture with the shell. In a fourth variation of this style, the drum body is squared off to provide for more efficient use of storage space. The trade-off for this gain is some reduction in stacking strength as compared to the right circular cylindrical form of other drums. The primary application for all-fiber drums is for the packaging of dry powders, frequently with an inner polyethylene bag.

REGULATIONS

The manufacture and use of fiber drums are regulated by a wide variety of governmental and nongovernmental national and international agencies.

NMFC and UFC

The National Motor Freight Classification (NMFC) and the Uniform Freight Classification (UFC) are nongovernmental agencies concerned with the shipment of all commodities, hazardous or not, by common carrier by highway and rail, respectively, in the United States. As part of their function of setting freight rates for such shipments, these agencies also set construction specifications for the packaging to be used.

Other

The U.S. Department of Transportation (DOT), the International Maritime Organization (IMO), which publishes the International Maritime Dangerous Goods Code (IMDG), the International Civil Aviation Organization (ICAO), the International Air Transport Association (IATA), and RID/ADR, the organizations regulating international shipments of dangerous goods by road and rail in Europe have several things in common. First, they are all concerned only with the shipment of hazardous materials (the transport of dangerous goods). As far as these agencies are concerned, nonhazardous materials may be shipped in any packaging that the shipper desires to use. Second, they have all based their regulations, to a large extent, on the UN *Recommendations on the Transport of Dangerous Goods* (Orange Book). Fiber drums that conform with the UN Packaging Group I, II, or III Standards are often used to transport hazardous products in solid/dry form. Fiber drums cannot be used to transport hazardous liquids (1).

APPLICATIONS

Fiber drums are commonly used for the packaging of a broad range of products, from apple juice to zinc powder.

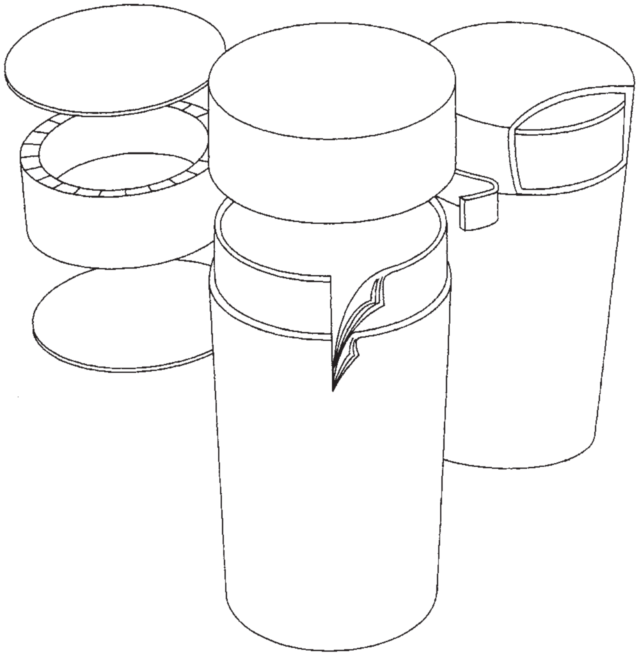

Figure 7. All-fiber drum.

Major markets include dry and solid chemicals, liquid and hot-melt adhesives, paints and coatings, liquid textile chemicals, such foods as tomato paste and dried onions, and rolls of plastic film and carpeting. Fiber drums are also used for the transport and dispensing of electrical wire and for the transport of hazardous wastes to incinerators and landfills.

RECYCLING

Fiber drums can be either reused, the component materials recovered and recycled, or disposed of in an energy-to-waste system. Internationally agreed identification code data and reycling logo can be applied to drum sidewalls and base that indicate their composition (2). This information is used as a guide to recycling. Fiber drum manufacturers can supply information and support on environmental and waste management issues.

BIBLIOGRAPHY

G. A. Gordon, “Drums, Fiber” in A. J. Brody and K. S. Marsh, eds., *The Wiley Encyclopedia of Packaging*, John Wiley & Sons, New York, 1997, pp. 310–315.

Cited Publications

1. Fibrestar Drums, Ltd., “Fibre Drums” in M. J. Kirwan, ed., *Paper and Paperboard Technology,* Blackwell Publishing, London, 2005.
2. SEFFI, European Drum Association, www.seffi.org, 2004.

DRUMS, PLASTIC

Bruno Poetz
Ernest Wurzer
Mauser Werke GmBH,
Düsseldorf, Germany

Chemicals and other industrial products are shipped mainly in pails and drums. In most parts of the world, 1- to 6-gal (4- to 23-L) open-top plastic containers, generally injection-molded (see Injection molding), are called pails (see Pails, plastic). In North America, 1- to 6-gal (4- to 23-L) closed-head (i.e., bung-type) blow-molded containers (see Blow molding) are called pails as well, or jerrycans. The term jerrycan is often used in other countries to describe bung-type containers in the 1- to 16-gal (4- to 61-L) size range. In general, however, the word drum applies to open- and closed-head containers larger than 6 gal (23 L). In North America, the standard drum sizes are 15, 20, 30, 35, 55, and 57 gal (57, 76, 114, 132, 208, 216 L). In Western Europe and most other parts of the world, standard drum sizes are 30, 60, 120, and 216 L (roughly 8, 16, 32, 55, and 57 gal).

Polyethylene liners for steel and fiber drums were blow-molded and rotationally molded in the United States and Western Europe in the 1950s, but there were no self-supporting plastic alternatives until the 1960s. In 1963, U.S. production of all-plastic 5-gal (19-L) pails and 16-gal (61-L) drums began. In western Europe, production of 16-gal open-top and bung-type drums started at about the same time, and a 32-gal (121-L) open-top drum soon followed. The introduction of all-plastic 55-gal (208-L) drums did not come until the early 1970s. The development of large all plastic drums took many years because they required special resins and processing equipment. Market acceptance has also required special designs.

Plastic containers have excellent performance characteristics. They are strong, lightweight, durable, corrosion-free, and weather-resistant and, in accordance with international transport regulations, are authorized to carry a great number of hazardous materials. Most plastic drums are used for chemicals, but they are also used in the food-processing industry for the shipment and storage of products that include concentrated fruit juice, vegetable pulps, and condiments.

RESINS

Self-supporting plastic drums are made of extra-high-molecular-weight (EHMW) high-density polyethylene (see Polyethylene, high-density). The molecular weight of these resins is so high that their flow rates cannot be expressed in terms of melt index (MI) as measured according to ASTM 1238, Condition E (44 psi or 303 kPa). The MI of relatively low-molecular-weight HDPE injection-molding resins ranges from 1 to 20 g/10 min; the MI of higher-molecular-weight blow-molding bottle resins is less than 1 g/10 min. Measuring the flow of EHMV resins requires higher pressure (Condition F, 440 psi or 3 MPa), and the values obtained are expressed in terms of high-load-melt index (HLMI). The HLMI of resins used for self-supporting drums range from 1.5 to 12 g/10 min. Design trends in plastic drums are related to the availability of EHMW resins. In the United States, 10 HLMI became the standard resin for drums with separate plastic- or metal-handling rings. The development of drums with integral handling rings required higher-molecular-weight resins (HLMI 1.5–3) that were available in Western Europe before they were produced in the United States.

All properties of polyethylene depend on three important factors: molecular weight (length of molecule chains), density (degree of crystallinity), and molecular weight distribution (distribution of longer and shorter chains). As molecular weight increases (and MI or HLMI decreases), toughness and resistance to stress cracking increases. The tradeoff for these improved properties is difficulty in processing. HDPE has crystallinity of 60–80% at density of 0.942–0.965 g/cm^3. (In contrast, LDPE has crystallinity of 40–50% at density of 0.918–0.930 g/cm^3.) As density increases, toughness and stress crack resistance decrease, but stiffness, hardness, and resistance to oils and chemicals improves. Molecular-weight distribution is related primarily to processing.

Chemical Resistance

Chemical resistance is particularly important in drum design. All 55-gal (208-L) drums use EHMW high-density resins, but there are variations within that category. Drums used for chemicals that are compatible with HDPE generally use relatively high-molecular-weight (e.g., HMLI 1–3) and relatively high-density (i.e., >0.95-g/cm^3) resins. Where stress cracking is a potential problem, relatively low-molecular-weight (e.g., HLMI 6–10) and relatively low-density (i.e., <0.95-g/cm^3) resins give better performance. Although no chemical dissolves polyethylene (particularly high-molecular-weight polyethylene), the effects of certain chemicals include strong swelling action by penetration into the container walls, stress cracking, oxidation, degradation by destruction of the macromolecules, or permeation through the container wall. Resistance tests should be made based on laboratory samples and on containers in use.

The resistance to stress cracking must be examined before using self-supporting plastic drums. The ESCR test prescribed in ASTM D1693 can be used for material selection, but tests must be performed on finished containers. This can be done by storing a drum filled with 5% surfactant for more than 3 months at temperatures higher than 40°C. Stress cracking may occur if there are stresses in the wall. Tensile and compressive stresses can be avoided by using an optimum wall-thickness distribution in production or in the design of the blow-molding tool. They may also occur when the products contain surface-active substances such as wetting agents at concentrations up to 20%. HDPE's resistance to stress cracking depends on the density and the molecular weight of the raw materials. As density increases, ESCR decreases. As molecular weight increases, ESCR increases. High-molecular-weight blow-molding resins with densities of 0.947–0.954 g/cm^3 have a high degree of stress-crack resistance and are ideal for drums (1).

HPDE drums can safely package a wide variety of chemicals. Uses within the chemical industry include dairy, agricultural, electronic, specialty, photographic, and oil-well applications, as well as those for organic and inorganic chemicals and natural flavorings.

Permeability

HDPE is susceptible to permeation by certain chemicals. Special attention should be paid to inorganic chlorinated hydrocarbons (e.g., per- and trichloroethylene) and aromatic hydrocarbons (e.g., benzene, toluene, and xylene). Normally, inorganic chlorinated or aromatic hydrocarbons cannot be packed in HDPE drums owing to permeation, but the permeation rate can be reduced by several methods of surface modification (see Surface modification). Within the HDPE family, high-molecular-weight grades have relatively high resistance to permeation. The risk is also reduced by using relatively thick walls.

UV Resistance

The service life of HDPE containers cannot be accurately predicted because it largely depends on climatic conditions. Different colorings (see Colorants), especially black (with carbon black), blue, green, white, and gray, increase resistance to weathering and protect the product from light. Depending on climatic conditions, additional UV stabilizers must be added.

DESIGN

Closed-Head Drums

Closed-head drums, also called tight-head drums, are available in different designs, with 2-in. (51-mm) and 3/4-in. (19-mm) bungs, in 15-, 30-, and 55-gal 57-, 114-, and 208-L) sizes. They are used where handling equipment is available to accommodate them. This is important because large self-supporting drums are designed to replace composite steel drums (steel with plastic liners or coatings), for which mechanical handling equipment is available worldwide. In the United States, plastic drums were initially designed with metal handling rings so that the drums could package heavy liquids (e.g., up to 1.8 g/cm^3 or 825 lb/55 gal) and still be handled by traditional steel-drum handling equipment, particularly the "parrot's beak."

A different approach was taken in Europe and other parts of the world, where the L-ring drum was 30- and 55-gal (114- and 208-L) capacities has become the standard. L-ring drums are produced by blow-molding the drum and integral rings in one step. The use of this configuration required the development of a wider parrot's beak, and at first it was approved only for liquids with densities less than 1.2 g/cm^3 or 550 lb/55 gal. The L-ring is now approved for heavier liquids.

Open-Top Drums

For general applications, open-top drums are provided in 8-, 15-, 30-, and 55-gal (30-, 51-, 114-, and 208-L) sizes. The advantages of the standard open-top drum are easy handling, absolute tightness, good stacking properties, and high radial rigidity. They are used most often for water-based products such as glues, softeners, and liquid soaps, as well as for foodstuffs. The standard open-top drum can be cleaned easily and reused.

SHIPMENT OF HAZARDOUS MATERIALS

International regulations for transport of dangerous goods (hazardous materials in the United States) are one of the central issues regarding the use of plastic drums because of heightened worldwide concern for environmental protection and the increasing number and volume of dangerous goods being shipped. HDPE is a safe and durable material for shipping dangerous goods.

United Nations Regulations

International regulations concerning packaging tests for hazardous materials are contained in the *United Nations Transport of Dangerous Goods* (2) and in the *International Maritime Dangerous Goods Code* (IMDG Code), which regulates substances shipped overseas. The recommendations do not specify how a package is to be made. They stipulate package-performance tests for each dangerous substance and modification of the test procedures based on the degree of hazard and some physical properties of the substance. They require a certification mark to show that the package has passed the tests. Self-supporting plastic drums can be used for a wide variety of dangerous substances. A typical drum marking under these regulations would be

$$\mathrm{UN} = 1\mathrm{H}1/\mathrm{Y}.1.8/150/84/\mathrm{D}/\mathrm{Mauser}\,824$$

where UN = United Nations; 1H1 = plastic drum, small opening; Y.1.8 = Group II products up to 1.8 g/cm^3; 150 = test pressure, kPa; 84 = year of production; D = FRG; Mauser = producer; and 824 = registration number.

U.S. Regulations

The Materials Transportation Bureau (MTB) of the Department of Transportation (DOT) has expanded Specification 34 (CFR, Title 49, Part 178.19) to include 55-gal (208-L) plastic drums (3). Previously, only drums of up to 30 gal were included, and 55-gal (208-L) drums needed special exemptions. The revision eliminates the need for those exemptions. They are now marked DOT-34-55. Some familiar commodities have been written into the regulations with no restrictions, but many of the chemical listings in Part 173.24(d) prescribe channel compatibility and permeation tests. Reference to specific types of polyethylene has been deleted from the most recent revision. Minimum wall thickness is specified, but this does not create significant differences between drum construction in the United States and other countries.

European Regulations

European regulations for rail and road transport of hazardous materials in plastic containers up to 250 L (66 gal) include testing procedures based on test data obtained with model liquids such as acetic acid, nitric acid, water, white spirit, surface-active agent, and *n*-butyl acetate. On the basis of the dangerous properties of these materials, all other dangerous substances can be approved and assimilated as long as their individual requirements are taken into account in testing. Plastic containers are included in the packaging regulations as follows: up to 15 gal (57 L) for Class-1 dangerous substances (very dangerous); up to 55 gal (208-L) for Classes 2 (dangerous) and 3 (less dangerous). Apart from the requirements concerning approval of the containers, quality assurance in production plays an important role in the safe transportation of dangerous goods.

Plastic drums will continue to gain importance, particularly if worldwide standardization occurs.

BIBLIOGRAPHY

Bruno Poetz and Ernest Wurzer, "Drums, Plastic" in M. Bakker, ed., *The Wiley Packaging Encyclopedia Technology*, 1st edition, John Wiley & Sons, New York, 1986, pp. 247–249.

Cited Publications

1. D. L. Peters, P. E. Campbell, and B. T. Morgan, "High Molecular Weight High Density Polyethylene Powder for Extrusion Blow Molding of Drums and Other Large Parts" in *Proceedings 42nd SPE Annual Technical Conference and Exhibition*, 1984, Society of Plastics Engineers, Inc., Brookfield, CT, 1984, p. 939.
2. "General Recommendations on Packing," *United Nations Transport of Dangerous Goods—Recommendations of the Committee of Experts on the Transport of Dangerous Goods*, 3rd revised edition, United Nations, New York, 1984, Chapter 9.
3. *Fed. Reg.* **49**(116), 24684 (June 14, 1984) and **49**(199), 40033 (October 12, 1984).

DRUMS/PAILS, STEEL

Richard B. Norment
Steel Shipping Container
Institute, Washington, DC

Despite centuries of innovation, no one has devised a more useful and adaptable medium-sized container for liquids and semisolids than a cylindrical container. Its shape, based on the circle, provides maximum strength; when fully laden, it can be tipped over and rolled. Early ocean shippers employed heavy, easily breakable clay and ceramics. They knew smelting and metalworking, but evidently could not produce metal containers much larger than pots and pans. From the Middle Ages until recent times, the standard container material was wood, usually oak, formed into metal-bound, stave-constructed barrels and kegs (see Barrels). The wooden barrel had no weight advantage but was far stronger and could be manufactured anywhere of materials widely available at low cost. Design differed little from the early jars, featuring the same bilged sides for maximum strength. In almost every trading nation, the wooden barrel reigned as the universal shipping container for liquids and semisolids until the late 19th century, when the first steel barrels appeared in Europe.

Impetus for the invention and development of the modern steel drum had begun years earlier with the Great Oil Rush of 1859. Oil-drilling technology improved so rapidly that by 1869, U.S. wells were producing 4,800,000 barrels ($7.6 \times 10^5\,\mathrm{m}^3$) a year. That introduced a much tougher problem: how to store and ship the oil. The only container available was the wooden barrel. Demand soon outstripped the production capacity of the cooperage firms, and oak became scarce and very expensive. The immediate solution was the development of pipelines, railroad tank cars, and the tank truck. But for smaller packages, oil-industry shippers still had to struggle along for another 40 years with the time-honored wooden barrel. Kerosene was the most important barreled product. The wooden barrel's chief problem was leakage. Designed to hold 50 gal ($0.189\,\mathrm{m}^3$), it commonly lost enough per trip to arrive at its destination containing only about 42 gal ($0.159\,\mathrm{m}^3$), a figure that has remained the standard "barrel" measurement of the oil industry.

A few years after their development in Europe, the first steel barrels were produced commercially in the United States by Standard Oil at Bayonne, NJ, in 1902. Constructed from 12 to 14-gauge terne steel, they were heavy, clumsy, bilged affairs with riveted or soldered side seams and were anything but leakproof. Extremely rugged, many of them lasted 20–30 years. They were also expensive compared with wooden barrels. Despite the need, steel barrels were slow to catch on; yet technical developments came rapidly. In about 1907, the welded side seam was introduced, which curtailed the leakage problems of riveted barrels and reduced costs. Shortly afterward, the first true 55-gal (208-L) drum was introduced, with its characteristic straight sides contrasting markedly with the bilged barrel. Rolling hoops were introduced soon thereafter, both expanded and attached, with the latter utilizing an I-bar section. The mechanical flange was invented after 1910. These improvements were far-reaching and gave the new container added advantages. Among them was lighter weight, which reduced shipping costs and reduced the amount of steel required. The new drum design permitted use of 16- and 18-gauge steels instead of the far heavier gauges used previously. These drum developments were followed in 1914 by the first true steel 5-gal (18.9-L) pail featuring the first lug cover.

The use of steel containers grew slowly before 1914, despite their cost, weight, and safety advantages over wooden containers. The advent of World War I marked the beginning of the end for the wooden barrel, along with the eventual dominance of the steel drum and pail. Wartime demand also spurred many improvements in manufacturing techniques and equipment. After the war, many innovations appeared, including pouring pails, agitator drums for paints, and new, colorful decorating techniques. Manufacturers began to use steel containers for products other than petroleum products and chemicals. Toward the end of the 1930s, the steel-container industry started gearing up for a second wartime effort. This time, however, the demands were far more stringent, requiring fuel containers for a highly mechanized war on more than one front. Innovation took a back seat to production considerations as war machines on the ground and in the air consumed vast amounts of fuel and chemicals. The 55-gal (208-L) 18- and 16-gauge drums were indispensable to the fuel supply of island bases and assaults in the Pacific, frontline mechanized operations in Europe, and to air and ground operations in East Asia. Apart from its ruggedness, the fact that a cylindrical drum could be rolled by one man was an important feature.

Although a downturn in steel drum and pail production occurred at the end of World War II, it was of short duration. Resumption of business created a demand from industry, agriculture, and consumers. The acceleration in chemical and pharmaceutical product development and output provided new markets for steel drums and pails. Demand for paints, lacquers and varnishes, adhesives, inks, foodstuffs, and other products made the steel shipping container industry one of the largest users of cold-rolled sheet steel (approximately 1 million tons in 1993). Despite the introduction of competitive containers made of other materials and of intermediate-bulk containers, U.S. production increased from 2.4 million drums in 1922 to 32.35 million drums in 1993.

Drums range in size from 13 to 110 gal (49 to 416 L), but the 55-gal drums account for 80% of annual production. Over 75% of all new drums are used for liquids, and the rest are used for viscous and dry products. About 70% of the market is accounted for by five broad product categories: chemicals (35%); petroleum products, including lubricants (15%); paints, coatings, and solvents (10%); food and pharmaceutical products (5%); and janitorial supplies, cleaning compounds, and soaps (5%).

As a result of increased environmental awareness, drum manufacturers, drum users, reconditioners, pail and drum recyclers, and steelmills have developed programs to collect, recondition, and/or recycle used steel drums and pails. In addition the recycled content of steel has surpassed an average of 25% per container. In fact, more steel is recycled than all other packaging materials combined (53 million tons of steel scrap in 1993) (1). Thus, choosing steel packaging conserves energy and natural resources and reduces waste. Each year over 40 million drums are reconditioned, thus prolonging the useful life of steel drums.

The industry's growing involvement in drum and pail reclamation is an important factor in purchasing agents' or packaging engineers' decisions to select the appropriate container for their company's products.

DRUM AND PAIL CONSTRUCTION

Steel drums [13–110 gal (49.2–416 L)] and pails [1–12 gal (3.8–45.4 L)] are generically fabricated from cold-rolled sheet steel in a range of thicknesses from 0.0946 in. (2.4 mm) (formerly 12-gauge) to 0.0115 in. (0.292 mm) (formerly 29-gauge). They consist of a cylindrical body with a welded side seam and top and bottom heads. The thickness of steel used in pails and small drums usually range from 0.0115 in. (0.3 mm) to 0.0269 in. (0.7 mm), while thicker steel [i.e., from 0.030 in. (0.8 mm) to 0.0533 in. (1.4 mm)] are used for larger, reconditionable drums (see Table 1).

Most drums are made of commercial-grade cold-rolled sheet steel, but stainless steel, nickel, and other alloys are used for special applications. Only about 45% of all new drums are lined with interior protective coatings, but the percentage is much higher (i.e., 80%) for drums used for chemicals. Over the years, the cost and weight of steel drums have been reduced owing to technological advances, such as the introduction of the triple-seam chime in the early 1980s. Improvements in cold-rolled steel chemistry, surface quality, and gauge control have also contributed to a reduction in cost and weight. Until the early 1960s, most tight-head drums were made of steel 0.0428 in. (1.1 mm) thick (formerly 18-gauge). There has since been a shift to a lighter-gauge drum with a steel thickness of 0.043 in. (1.1 mm) in the top and bottom heads and 0.030 in. (0.8 mm) in the body (formerly known as the 20/18 drum, now marked as 1.1/.8/1.1). Currently, 55-gal (208-L) drums of 0.0378-in. (1.0-mm) steel thickness are being manufactured to transport hazardous materials,

Table 1. Sheet Steel Thicknesses Versus Gauge No[a]

	Minimum Thickness		Nominal Thickness Marking[b]
Gauge No.	in.	mm	mm
12	0.0946	2.40	2.4
16	0.0533	1.35	1.4
18	0.0428	1.09	1.1
19	0.0378	0.960	1.0
20	0.0324	0.823	0.8
22	0.0269	0.683	0.7
24	0.0209	0.531	0.5
26	0.0159	0.404	0.4
28	0.0129	0.328	0.3
29	0.0115	0.292	0.3

[a] Sheet steel thickness is measured at any point no less than 3/8 in. (9.53 mm) from the edge. New DOT regulations that went into effect for new packaging manufacturers on October 1, 1994 no longer refer to steel thicknesses in gauges but rather in millimeters.

[b] Nominal thickness markings are those applied as part of the durable and permanent UN marks on the drum and pail (4). Consult ISO Standard 3574 for nominal thickness tolerances.

and 55-gal drums of 0.030-in. (0.8-mm) thickness or thinner are used for nonhazardous materials. Other popular sizes are 30 and 16 gal. In addition, the 85-gal drum, known as the “salvage drum,” is used to transport leaking or damaged packagings and debris from hazardous materials accidents. Each size can fit the non-bulk packaging needs of the drum user. [For a complete list of standard drum sizes and dimensions, consult *ANSI MH2-1991* (2).]

STYLES

Two basic styles of drums exist: the tighthead (or non-removable head), with permanently attached top and bottom heads, and the open head (or removable head), in which the removable top head or cover is secured by using a separate closing ring with either a bolted or lever-locking closure (see Figure 1).

Expanded rolling hoops, ie, swedges, in the drum body stiffen the cylinder and provide a low friction surface for rolling filled containers.

Tight-head drums (and pails) have their top and bottom heads mechanically rolled (seamed) in multiple layers to the body using a nonhardening seaming compound to form a joint (chime). Two openings, one 2 in. (51 mm) and the other 3/4 in. (19 mm), for filling and venting are usually provided in the top head, although side openings and other opening combinations and sizes are sometimes used. The openings are fitted with mechanically inserted threaded flanges conforming with American National Pipe thread standards. Threaded plugs for insertion in the flanges are made of steel or plastic and have resilient gaskets where appropriate. On full-removable-head drums, the top of the body sidewall is rolled outward to form a follow curl (false wire) to which the top head or cover is attached using a gasket of resilient material and a separate closing ring.

Steel pails are generally of the same configuration and style as the large-capacity steel drums, but are usually of thinner metal and may have only one expanded body hoop. A bail handle or carrying grip is often provided for handling purposes. A common closure for open-head pails is a lug cover that is crimped in place around the top curl and is removed by lifting the lugs (see Figure 1).

PROTECTION AND LININGS

Most steel pails and drums are fabricated from steel treated to resist rusting owing to moisture in the air. Steel is a nonpermeable, biodegradable material that is compatible with most chemicals and petroleum-based products.

Coatings are applied to the inside of drums (linings) and the outside (paint) to provide additional protection and decoration. State and federal environmental regulations control the amount of volatile organic compounds (VOCs) emitted during the application of the linings and the paint. Because conventional linings and paint contain some degree of organic solvent or heavy-metal pigments, these are being replaced by water-based or high-solids linings and nontoxic paint. In many instances, steel drum and pail manufacturers use after-burners to incinerate all vapors emitted in the paint booths, thereby reducing VOCs. Companies also recapture spray paint for remixing and reapplication on containers to conserve paint and protect the environment.

Interior

Linings are used for protection against acids, alkalies, and some organic chemicals. Phenolics provide protection against certain acids, and epoxies offer protection against alkalies. Linings consisting of varying percentages of epoxy and phenolic materials are most commonly used today. In some instances, the needed protection is supplied by a flexible or semirigid polyethylene liner insert.

Exterior

New steel containers can be painted, lithographed, or silk-screened to provide an attractively decorated and durable finish. Enamels are sprayed or roller-coated, baked, and oven-cured to give a scuff-resistant exterior coating. Black is generally the standard color, but other colors are available as well. Product and manufacturer information for merchandising or to satisfy transportation needs is applied by lithography, silk-screening, or stenciling.

STANDARDIZATION

National standards for steel pails and drums have been developed in the United States within the American National Standards Institute (ANSI) by a Committee on Steel Pails and Drums sponsored by the Steel Shipping Container Institute.

These dimensional standards have received international acceptance and have provided many advantages in

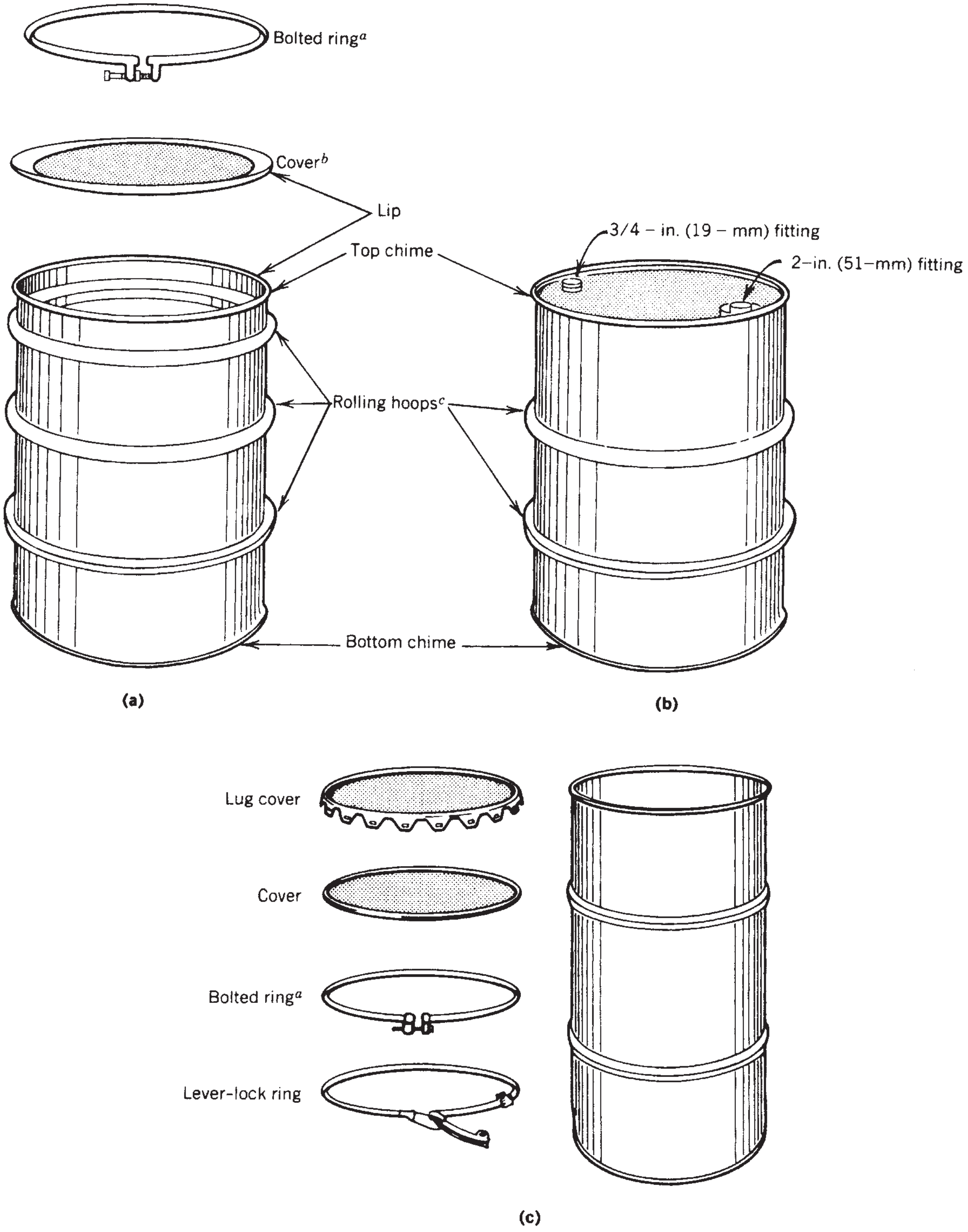

Figure 1. Steel drum designs: **(a)** open-head 55-gal (208-L) drum; **(b)** tight-head 55-gal (208-L) drum; **(c)** open-head 16-gal (606-L) drum. In part a, lever-lock ring may be used; in part b, lip of cover is turned down to fit over lip of drum; in part c, two or three rolling hoops may be used, depending on size and material packaged. Hoops are equally spaced horizontally. Actual drum dimensions may vary.

the areas of filling, handling, storage, and shipping. There are presently standards for the 55-, 30-, and 16-gal open-head and tight-head drums, as well as for the 20-L and 5-gal tight-head, nesting-lug cover, and straight-sided lug cover pails. The ANSI standard also includes a thorough glossary of terms related to packaging. The ANSI Committee is presently in the process of revising the current edition of the standard, *ANSI MH2-1991* (2), to incorporate the construction requirements set forth under the Department of Transportation's *Performance-Oriented Packaging Standards*, published in 1990 (see under "Regulations" below).

REGULATIONS

All-steel pails and drums used in the United States for the transport of hazardous materials must comply with the Department of Transportation's Hazardous Materials Regulations (DOT) (4). For nonhazardous products, these containers usually comply with the minimum requirements of the specifications set forth in the railroads' Uniform Classification Committee (UCC) (5) and the highway carriers' National Classification Committee (NCC) (6). Noncompliance with these latter two organizations' specifications, known respectively as the *Uniform Freight Classification* (UFC) (5) and the *National Motor Freight Classification* (NMFC) (6), may lead to higher insurance costs for the packager and/or shipper.

Significant regulatory changes have taken place at the DOT. Hazardous materials, governed by DOT, include flammable liquids, gases, and solids; oxidizing agents and organic peroxides; poisons; explosives; radioactive materials; corrosive materials; and certain marine pollutants and hazardous wastes. Decades-old DOT design specifications (such as the DOT-17E, -17 H, and -17C containers) have been replaced by new *Performance-Oriented Packaging Standards* (also known as HM-181 for its DOT docket number), based on the United Nations' *Recommendations on the Transport of Dangerous Goods*. The reasons for this shift were harmonization of packaging requirements with international regulations and development of package safety criteria based on the performance of the container rather than on its design. This has entailed a complete restructuring of the way packagings are specified. The SSCI's manual *Understanding HM-181 for Steel Drums* (3) summarizes the DOT regulations found in Title 49 of the *Code of Federal Regulations* (4) as they pertain to steel drums and pails.

Packagers must now provide their drum and pail suppliers with the following information: Packing Group, product vapor pressure (if liquid), net mass (if solid), and specific gravity (if liquid). The SSCI *Buyer's Guide* (7) provides a checklist for the packager. The steel drum and pail manufacturer marks the container, after having performed the following tests: drop, leakproofness, stacking, hydrostatic pressure (if liquid), and vibration. These tests are meant to minimize the risk of leakage that might result from normal handling, shipping, storage, and accidents.

A sample mark for an open-head steel drum of 1 mm thickness manufactured in 1994 by manufacturer M1234 and authorized to carry a Packing Group II or III solid with a gross mass of 300 kg (or less) is

UN 1A2/Y300/S/94/USA/M1234 1.0

where UN = United Nations, 1 = drum, A = steel, 2 = open head, Y = Packing Group II or III, 300 = maximum gross mass in kilograms (net mass of solid plus mass of drum), S = solid, 94 = year of manufacture, USA = country of manufacture, M1234 = manufacturer's number of symbol, and 1.0 = thickness in millimeters.

A tighthead drum with a nominal 1.1-mm-thick head and bottom and 0.8-mm body manufactured in 1994 and authorized to carry a Packing Group II or III liquid with a specific gravity of 1.8 or less and with a product vapor pressure of 230 kPa (or less) at 55°C is marked

UN 1A1/Y1.8/230/94/USA/M1234 1.1/.8/1.1

where UN = United Nations, 1 = drum, A = steel, 1 = tighthead, Y = Packing Group II or III, 1.8 = specific gravity (relative density of material to water), 230 = maximum hydrostatic pressure tested in kilopascals, 94 = year of manufacture, USA = country of manufacture, M1234 = manufacturer's number of symbol, and 1.1/.8/1.1 = thickness of top, body, and bottom in millimeters.

Steel drums of 1.0-mm thickness or more (also 1.1/.8/1.1) are permitted to be reconditioned and reused to transport hazardous materials, thereby extending the life of the container. Title 49 of the *Code of Federal Regulations* (CRF), Parts 100–199, gives the full details of DOT hazardous materials regulations. These regulations govern shipment by land, sea, and air. It is the responsibility of the shipper to ensure that they are using containers tested and marked in accordance with the minimum requirements for the material to be transported.

International

As stated above, the DOT's new POP standards are based on the *Recommendations of the United Nations Committee of Experts on the Transport of Dangerous Goods*, acting under the direction of the United Nations Economic and Social Council (8). Chapter 9 contains "General Recommendations on Packing," which details packaging requirements, types of packagings, and marking and testing requirements.

Members of the UN Committee are committed to adopt these recommendations into their respective nation's transportation regulations as closely as possible to the original, although differences are permitted. The UN recommendations are not regulations per se, but guidelines for regulations. Yet they are usually part of the law in the country of export or import, if not both. For example, Canada has adopted the UN recommendations into its Transportation of Dangerous Goods Act and Regulations and Related Performance Packaging Standards, while Mexico has nearly completed the process of writing the POP standards required under its hazardous materials transportation law of 1993.

Two international codes do have the force of law for member states: the International Maritime Organizations' (IMO) *International Maritime Dangerous Goods Code* (IMDG Code) governing hazardous materials transportation by water and the International Civil Aviation Organization's (ICAO) *Technical Instructions for the Safe Transport of Dangerous Goods by Air*. These two codes have adopted the UN recommendations.

As of January 1, 1995, European road and rail regulations (ADR and RID) conform to the most recent revisions of the UN recommendations.

STEEL PAILS

About 73 million new steel pails are currently produced in the United States each year; sizes range from 1 to 12 gal (3.8 to 45.4 L).

About 80% is accounted for by the popular 5-gal (18.9-L) pail. They are made in four basic configurations: full open-head, straight side, lug cover; full open-head, nesting, lug cover; tight-head, straight side; and tight-head dome top (see Figure 2). They are constructed of 0.0115-in. (0.3-mm) or thicker steel. Pail heights vary by volume, but diameters are 6 and 8 in. (15.2 and 20.3 cm, respectively) for 1 to 2.5-gal (3.8 to 9.5-L) sizes, 11.4 in. (28.6 cm) for 3–7 gal (11.4–26.5 L), and $13\frac{15}{16}$ in. (35.4 cm) for larger capacities. The two open-head designs account for about 75% of the total pail production.

Both types of open-head pails have a liquid-tight, welded side seam on the pail body and a bottom affixed by double seaming (see Can seamers). Two side "ears" are welded or riveted to the body, and a galvanized wire bail handle is attached. Handles are furnished with or without a grip, which can be wood or contoured plastic. The straight-sided pail normally has one strengthening body head (i.e., swedge), to add rigidity to the top of the

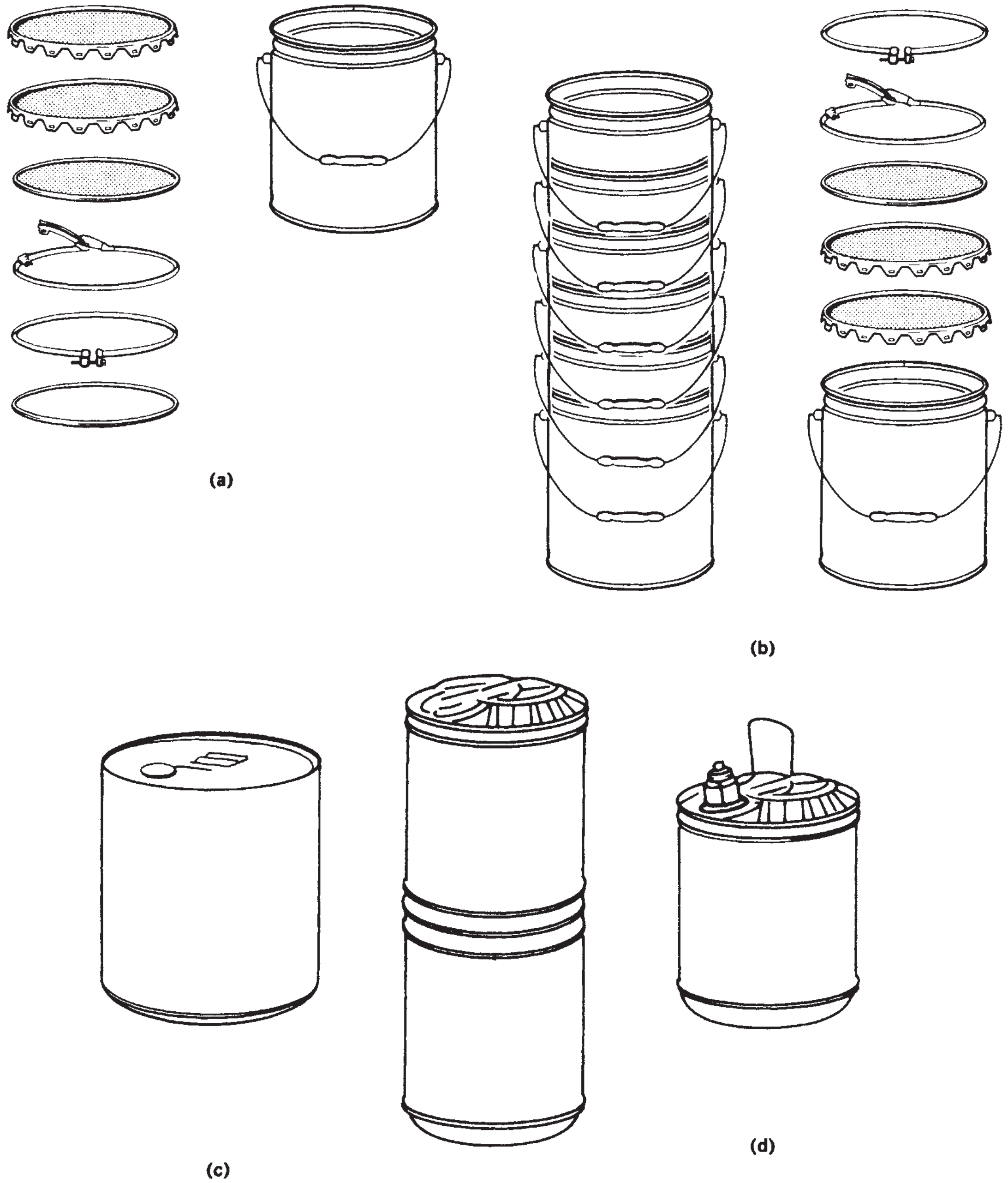

Figure 2. Designs for 5-gal (18.9-L) steel pails: (**a**) Open-head, straight side, lug cover; (**b**) open-head, nesting, lug cover; (**c**) tight-head, straight side; (**d**) tight-head dome top. (Courtesy of SSCI.)

cylinder. The tapered type usually has a second bead that, in nesting, rests on the top curl of the pail below and limits nesting depth.

The tight-head pail, accounting for some 25% of sales, is often used for the shipment of low viscosity or free-flowing liquids. It embodies a welded side seam, double-seamed top and bottom ends, and a carry handle, usually a D-ring, of galvanized wire spot-welded to the head. This container can be fitted with a variety of pouring and venting apparatus. An offshoot of the tight-head pail is a domed-top or utility pail, especially popular in $2\frac{1}{2}$- and 5-gal (9.5- and 18.9-L, respectively) sizes for petroleum products.

Pails are used for liquids, viscous products, powders, and solids. Pail markets include paint and printing inks; chemicals; adhesives, cements, and roofing materials; petroleum products; janitorial supplies (e.g., cleaners, and waxes); abrasives; cosmetics; fasteners and stamping; foods; insecticides; marine supplies; pharmaceuticals; powdered metals; and scores of other products and materials.

Because of their ability to withstand high temperatures, pails are the container of choice for the transportation and indoor storage of flammable and combustible liquids. The range of classes of flammable and combustible liquids allowed for warehousing and storage is greater than the range for like-sized containers made of plastic. See, for example, NFPA Code 30 on Flammable and Combustible Liquids (9).

In addition to varying capacities, steel thicknesses, and container construction, a host of options, fittings, and accessories are available to design a pail to a buyer's exact requirements.

Open-head pails can take two types of covers. The lug cover, usually incorporating 16 wide lugs around its circumference, can be applied at production-line speeds by automatic crimping equipment, although hand-operated and semiautomatic crimping tools are also available. The lug cover is opened with standard hand tools. The second cover, a ring seal, is best for resealing purposes. It consists of a formed disk that sits on the top curl of the container and is clamped to it either by a separate ring band or with rings that lock by lever action or bolt-tightening.

Another option is a combination of steel thicknesses. Cover and ends can be made of steel of different thickness than the body for different requirements of strength and economy. Lids and bottom ends can be strengthened by using embossed circumferential beads to provide increased rigidity.

On both tight-head and open-head pails, a wide range of opening sizes, pouring spouts, and cap closures is available. To cut costs, covers can have a simple, threaded pouring nozzle topped by a screw cap. Even simpler are pails furnished with just a dust cover over the pour opening to keep the interior clean, with the user clinching on or pressing in a pouring fitting after filling. Various metal and plastic pouring devices are offered, mostly of the pull-up style; these are covered by a cap during shipment. Some pour fittings incorporate vent openings that eliminate the need for a separate vent opening on the cover. Tamperproof seals, consisting of a steel cap clinched directly onto the pail fitting, are often used.

BIBLIOGRAPHY

1. Steel Shipping Container Institute, *Steel Shipping Containers: The Choice for the Environment*, Washington, DC, 1994.
2. *ANSI MH2-1991*, American National Standards Institute, New York, 1993.
3. Steel Shipping Container Institute, *Understanding HM-181 for Steel Drums*, Washington, DC, 1993.
4. U.S. Department of Transportation, *Code of Federal Regulations*, Title 49, Parts 100–199 (October 1993).
5. Uniform Classification Committee, *Uniform Freight Classification*, National Railroad Freight Committee, Atlanta.
6. National Classification Committee, *National Motor Freight Classification*, National Motor Freight Traffic Association, Alexandria, VA.
7. Steel Shipping Container Institute, *A Buyer's Guide to New Steel Drums & Pails*, Washington, DC, 1994.
8. United Nations Committee of Experts on the Transport of Dangerous Goods, *Recommendations on the Transport of Dangerous Goods*, 8th edition, United Nations, New York, 1993.
9. *ANSI/NEPA 30*, National Fire Protection Association, Quincy, MA, 1993.

ECONOMICS OF PACKAGING

DIANA TWEDE
School of Packaging, Michigan
State University, East Lansing,
Michigan

PACKAGING MACROECONOMICS

U.S. industry shipments of packaging materials and containers in 2005 were nearly $103 billion, and sales of packaging machines were estimated to be $5.76 billion. Combined, these represent about 2.4% of all U.S. manufacturing shipments (see Table 1). But the economics of packaging go far beyond the simple cost of producing the materials and machines.

The total cost of the nation's packaging operations is easy to underestimate because it is embedded in the cost of producing everything, and data on packaging operation costs are not published. All products are packaged in some way, and their components and ingredients are repacked several times in the manufacturing operations of a supply chain. The fact that all products are packaged means that the packaging industry performance parallels the national economy's performance.

The packaging industries have almost every other kind of business as a customer, and so packaging affects the supply cost and demand of every product and factor of production, from food to building materials to auto parts. Retailing and distribution industry costs are also affected by packaging. And after use, packaging affects the social costs of disposal or recycling.

It is equally problematic to estimate the *value* of packaging. The values of protection and containment relate to the physical requirements of the product. Values of communication and differentiation relate to the marketing requirements that facilitate sale. Therefore, the amount of packaging materials used per product varies enormously. For example, the can represents a much larger proportion of the cost of a canned soft drink compared to the relative cost of a multiwall shipping sack for 50 lb of flour. Furthermore, packaging is a key way to differentiate products and add value to markets willing to pay higher prices.

Table 1. Gross Domestic Product 2000–2005 versus Packaging Expenditures (in millions of current U.S. dollars)

	2000	2005
Estimated U.S. value of all manufacturing shipments (1)	$4,209,000	$4,545,000
U.S. value of packaging shipments (2)	$92,617	$102,756
Percentage: packaging of all shipments	2.2%	2.26%
U.S. packaging machinery shipments (3)	$3,820	$5,760
Percentage (packaging material+machinery)	2.32%	2.39%

Consumer products use 80% of the packaging materials in the United States. The largest segment is the food and beverage industry, purchasing a little over half of all consumer packaging (35% for food and 19% for beverages). Other consumer products like health and beauty aids and household cleaners account for 8%, and a combination of tobacco, clothing, appliances, electronics, and furniture make up the rest (18% of consumer goods packaging). Packages for shipping (which includes shipping containers for consumer products) comprise 33% of the value of packaging (2).

Globally, the cost of packaging is variously estimated at between $390 billion (4) and $450 billion USD (5).

Developed market economies consume the most packaging. Pira International estimates that North America consumes 29% of the world's consumer packaging and Europe consumes 33%, compared to 4% by Latin America and 34% by the rest of the world (5). Datamonitor splits the worldwide consumption in thirds: the Americas at 34.2%, Europe at 33.2%, and Asia/Pacific at 32.5% (4). The U.S. per capita consumption of packaging for 2004 was estimated at slightly over $350 (5).

The expenditure on packaging is much lower in less developed countries, and packaging solutions tend to have lower cost. Materials and graphics are less sophisticated, the process to make and fill packages is more labor-intensive, and machinery is slower and less efficient than in industrialized countries. Food is not shipped long distances and is more likely to be purchased fresh rather than processed and packaged. There is less variety and much greater losses due to spoilage. But the packaging that is developed is generally economical, material recovery systems are efficient, and there are many creative packaging applications using indigenous materials and appropriate technology.

Packaging plays a significant role in a nation's economic development. Improvements in packaging can facilitate economic growth by increasing the efficiency of markets and by adding value to exports. Packaging can reduce the cost of food and increase its supply by preventing losses, which can be as much as 50% for food in developing countries.

The best way to add value to exports is to ship packaged products rather than shipping in bulk. There is a growing demand for more sophisticated packaging materials and methods to be used for export packaging. There is increasing realization by government authorities that investments in packaging technology can yield economic benefits, and organizations like the International Trade Centre have implemented programs to develop human resources in packaging and make information more easily accessible (6).

Table 2. Actual and Forecast shipments of the U.S. Packaging Industry, 1992–2010

	1992	2000	2004	2005	2010	Increase %/yr
Paperboard/Molded Pulp						
Corrugated containers-a	$19,138	$24,610	$28,385	$29,500	$31,484	1.3%
Folding cartons	7,731	8,450	8,320	8,360	9,300	2.2
Sanitary food containers						
Milk and beverage	678	705	775	805	875	1.7
Cartons and trays	175	416	335	330	300	−1.1
Lipid tight	77	107	154	161	190	3.4
Fiber and composite packaging						
Cans	600	600	590	590	600	0.3
Drums	374	430	310	340	350	0.7
Rigid boxes	516	620	563	570	500	−2.5
Molded pulp products	354	550	481	492	550	2.1
	29,643	36,488	39,913	41,148	44,149	1.4
Metal						
Cans	11,665	10,954	11,374	11,700	11,000	−1.1
Shipping containers	1,132	1,200	1,345	1,440	1,470	0.4
Flexible	1,406	1,850	2,090	2,150	2,508	3.0
Miscellaneous						
Crown and closures	811	776	749	778	660	−4.0
aerosols	775	991	500	525	580	2.0
Foil containers	177	180	105	115	110	−0.5
Collapsible tubes	56	75	55	50	45	−3.0
Strapping	420	353	370	375	430	2.8
Pallets	25	20	25	25	30	3.0
	16,467	16,399	16,613	17,158	16,833	0.4
Plastics						
Containers						
Blow-molding bottles	4,577	7,510	7,920	8,790	10,900	4.4
Closures	1,586	1,865	2,210	2,323	2,700	3.1
Miscellaneous	2,153	2,667	2,825	2,970	3,760	4.8
Shipping containers	618	965	1,725	1,770	2,000	2.4
Squeeze tubes	220	350	410	440	510	3.0
Flexible packaging						
Speciality bags	959	1,450	1,644	1,690	1,910	2.5
Converted wraps	2,455	3,650	4,300	4,410	5,000	2.6
Wrappers	515	1,350	1,580	1,618	1,824	2.4
Shipping sacks and lines	220	265	220	235	240	0.5
Cushioning	835	1,395	1,485	1,515	1,665	1.9
Strapping	250	320	340	355	400	2.4
Pallets	55	160	220	230	270	3.3
Total	14,353	21,947	24,819	26,346	31,179	3.4
Paper						
Flexible packing						
Converted wraps						
All paper	866	1,155	1,050	1,058	1,100	0.7
Paper/foll	633	705	825	840	900	1.4
Wrappers	453	830	760	750	700	−1.3
Specialty bags-c	486	800	740	733	700	−0.9
	2,438	3,490	3,375	3,381	3,400	0.1
Label and tags	1,490	3,005	3,300	3,370	3,730	2.0
Heavy-duty bags	1,455	1,639	1,250	1,260	1,100	−2.7
Tapes	235	260	280	283	300	1.2
Wadding	30	110	122	120	50	0
	5,648	8,504	8,327	8,414	8,580	0.4
Glass						
Containers	4,915	4,105	4,304	4,500	4,800	1.3
Wood						
Pallets and skids	2,143	3,155	3,215	3,295	3,750	2.5
Containers						
Nailed boxes and crates	418	360	418	427	475	2.2

(Continued)

Table 2. Continued

	1992	2000	2004	2005	2010	Increase %/yr
Wire-bound boxes and crates	139	545	647	650	625	–0.8
Veneer and plywood containers	112					
Cooperage	112					
Excelsior	30	20	15	20	15	0.8
	2,954	4,060	4,295	4,392	4,865	1.8
Textile						
Bags	728	914	610	610	550	–2.0
Twine	100	150	130	128	100	–4.0
Flock	35	50	60	60	60	0
	863	1,114	800	798	710	–2.4
Total/Average	$74,863	$92,617	$99,131	$102,756	$111,116	1.6%

Notes: Shipments of many miscellaneous and unreported packaging items, Whose value may be as high as $1 billion, are not included. Some of the most important items excluded are plastic food and garbage bags, fast-food packaging, reconditioned barrels and drums, gas cylinders, tubes and cores, and bulk containers.

a. Includes solid fiber boxes.

b. Includes value of container, value, cap and propellant.

c. Includes paper/foil laminates.

d. Percent increase from 2004 to 2010.

Source: Estimates by *Impact Marketing Consultants, Inc., The Marketing Guide to the U.S. Packaging Industry*, 2006. Used by permission.

PACKAGING SUPPLY INDUSTRIES

Packing is produced by four manufacturing industries using very different raw materials and manufacturing processes. In the richly forested United States, the largest segment (40% of sales in 2005) is paperboard-based. Metal represents 16%, plastics is 26%, paper is 8%, and glass is 5%. Table 2 shows sales in the United States, by packaging material type, for an eighteen-year span, from 1992 to 2010 (estimated). It and most of the industry data which follows are drawn from *The Marketing Guide to the U.S. Packaging Industry*, used with permission (2).

The paper, glass, and metal packaging industries in the United States are mature. Their growth rate generally parallels, but is slower than, all manufacturing. The packaging industries' profitability varies, but is generally below the average for other manufacturing industries.

Commodity markets for metals, paperboard, and plastic resins used in packaging are characterized by low profit margins and high capital investments. Packaging conversion is, likewise, a low-profit sector. The degree of integration varies; paper and paperboard are the most vertically integrated, plastics is becoming less integrated as resin manufacturers have left the packaging business, and the big aluminum and steel producers no longer make cans.

However, unlike other mature industries, the packaging industry is not concentrated because packaging producers of various materials compete with each other due to the substitutability of container types. In 2005, only 26 companies had sales over $1 billion. The largest 50 packaging suppliers account for only 44% of total packaging shipments, with many companies supplying only one type of packaging material. Concentration is greater within each material's supply industry. Materials like molded pulp, beverage cartons, glass containers, and metal cans are made by industries in which the top four companies account for 65% of shipments (2).

Paperboard Packaging

Paperboard-based packaging is the largest segment of the packaging supply industry. It is also the most vertically integrated; companies producing 50% or more of their own paperboard account for 80% of the shipments of corrugated containers and folding boxboard cartons. Most of the large companies making paper-based flexible packaging also make their own paper (see also Paperboard).

Corrugated fiberboard accounts for almost 63% of the paperboard tonnage used in packaging. Since most products (in the United States, at least) are shipped in corrugated fiberboard boxes, the price is sensitive to the overall economy's performance. Periods of growth directly increase the demand for boxes by every industry, causing suppliers to reach full production capacity, which leads to higher prices. Similarly, the increase in imported goods from China has drawn demand away from the U.S. corrugated industry, and so the U.S. industry has cut its production in response, using the power of the integrated producers to orchestrate industry dynamics.

Paperboard packaging prices are also affected by the cost of wood (or recycled raw materials) and energy. Wood has always been relatively plentiful in the United States, and corrugated fiberboard boxes are one of the most highly recycled packaging materials. Energy is a large component of the production cost.

Metal Packaging

Tin-plated steel and aluminum cans make up most (70%) metal packaging. Packaging is a small portion (only 3.8%) of total steel production, but is 21% of total aluminum production. The metal can industry is one of the most concentrated of packaging industries in the United States, with the top 7 can producers accounting for 90% of the volume.

For many uses, steel and aluminum cans are interchangeable, and usage depends on relative prices. Aluminum is more expensive per pound than steel. But aluminum cans are lighter weight, and most innovations have emphasized further weight reductions. To reduce the cost of raw materials, the aluminum industry has facilitated recycling, and 50% of the aluminum cans used in 2003 (in the United States) were recycled. Since 1981, aluminum cans have outnumbered steel cans; aluminum is more popular for beverages, but steel still predominates for food (see Cans, aluminum; Cans, steel).

The largest use for metal cans (71%) is for carbonated beverages. The metal can is such a vital input to beer production that big breweries sometimes have their own captive can producing facilities. Food manufacturers use 26% of the cans produced.

The metal share of the packaging industry has been falling due to the substitution of plastics. Cans are being replaced by plastic bottles for beverages and by rigid plastic or retort pouches for food. Steel drums and pails have been replaced by lighter weight plastic drums and pails. The aluminum foil barrier in flexible packaging, bottle caps, and collapsible tubes has likewise been replaced by new high-barrier plastics.

Plastics Packaging

Plastics are the fastest-growing segment in packaging. Plastics have won market shares from all other packaging materials, converting glass bottle users to plastic bottles, paper bag users to plastic bags, fiberboard boxes to plastic wraps, and steel drums to plastic drums. Plastic packages generally use less material, are less costly to fabricate, and weigh less, thus reducing transport costs.

The largest-volume plastic used for packaging is low-density and linear low-density polyethylene used for film (LDPE and LLDPE = 30% of plastics packaging), followed by high-density polyethylene (HDPE = 26%), polyethylene terephthalate (PET = 18%), polypropylene (PP = 14%), polystyrene (PS = 8%), and polyvinyl chloride (PVC = 2%). The largest growth has been in PET for beverage bottles, including substitution for glass bottles and metal cans as well as the dramatic growth in the sale of bottled water.

The production of plastic resins is concentrated in oil-producing firms like Dow Chemical, ARCO, and DuPont. But the plastics converting industry is much more diverse, with few barriers to entry. Economical production scale is much smaller than that for converting paper, metal, or glass. Market leadership for a container type is often governed by proprietary technology that provides a special value. Since plastic forming is relatively easier than forming other packaging materials, there is more captive production by filling companies, especially for plastic bottles, thermoforms, and flexible packages that are produced in a form/fill/seal operation. (see Blow Molding and the articles on the individual plastics).

As the plastics industry has matured, it has developed more specialty applications. Lamination, coextrusion, and barrier coatings have improved barrier and strength properties, and thereby increased the market for plastic packaging. Furthermore, most composite packages (and even packages not normally thought of as composites, like coated cans and cartons) rely on an essential layer of plastic that adds strength, sealability, or barrier to other materials in the structure.

The flexible package converting industry is very dynamic. New materials and new combinations have been developed to improve manufacturing options and to increase the range of applications. Flexible packaging can now be used to package almost any kind of product, challenging every rigid packaging form with lower-cost options.

The flexible packaging industry is vital for developing countries without the resources or infrastructure needed for glass, metal, and paperboard industries. As a country develops its economy in the 21st century, improvements in low-cost flexible packaging can stimulate every sector, especially food industries.

Glass Packaging

Glass packaging is the smallest material segment in the U.S. packaging industry. Glass has suffered from declining sales as glass bottles and jars have been replaced by plastic, metal, and composite packages for many products. The 1980s was a period of consolidation and mergers, in an effort to make the industry more competitive with other materials. The top two producers now control 70% of the market.

The raw materials for glass are relatively inexpensive, but glass production requires a high amount of energy and has high labor costs. Very few bottle producers own the sources of raw materials, which account for 46% of the cost. The increase in recycling glass has reduced energy and material costs. Innovations in glassmaking have been focused on weight reduction, including improving the uniformity of glass distribution and plastic coatings, in order to reduce material and shipping costs. In addition, the efficiency of glassmaking has improved considerably (see also Glass container manufacturing).

The largest use for glass bottles is for beer (57% in 2004), followed by food (19%), beverages (9%), and liquor and wine (8%). However, in many cases, aluminum cans have displaced glass bottles for beer, and PET bottles have displaced glass for food, soft drinks, and liquor. Glass applications are growing only for food and drinks where its "prestige" image and high clarity are desired.

PACKAGING AFFECTS DEMAND FOR PRODUCTS

Packaging can increase the quantity demanded of a product by reducing its cost. For example, as developments in packaging technology have reduced the cost of protecting processed food, the market has grown to include more low-income consumers.

Packaging can also increase the absolute demand for a product by providing features that attract a new category of consumers. For example, the market for paint was increased by the introduction of "spray paint" to include consumers who had never painted before.

Packaging is used as a tool to differentiate products for market segmentation strategies. Buyers have unique needs and can be segmented into broad classes. For example, consumers with physical disabilities need easy-to-open packages. Some of the primary packaging benefits that are used to differentiate products are:

- The amount in the package, to match various consumption rates
- Low-cost minimal packaging for frugal shoppers
- Convenient package opening, reclosing, and dispensing features for a variety of consumer use behaviors
- Longer shelf life for consumers who want to store the product for future use, including packaging to reduce oxidation of fats and decay of fresh fruits and vegetables
- Special packaging for special occasions (gifts, holidays, etc.)
- Appeal to a consumer's psychographic image
- Fit with a lifestyle
- Package recyclability for environmentally conscious consumers

Of these benefits, the most universal demand is for low-cost improvements in package opening, reclosing, and dispensing features.

Packaging affects all stages of the buyer decision process—from problem recognition to postpurchase behavior—especially for routine purchases of low-involvement goods. Seeing a package can stimulate recognition of a problem that could be solved by the product. Package graphics can facilitate information search, evaluation of alternatives, and the purchase decision, by showing the attributes that differentiate the product inside. After the product is purchased, packaging shows how to use the product, and encourages a repeat purchase. Packaging can also play a role in purchases that require more extensive problem solving without the assistance of a salesperson.

PACKAGING COSTS

The cost of packaging per product, expressed as a percentage of selling price, varies widely, from 1% to 40%. For some products, like bottled drinks, perfumes, and aerosols, the package may cost more than the products' ingredients. These products depend on the package for their very existence. For other products such as durable goods, where the package is simply a means to facilitate distribution, the relative cost of the package is low.

Packaging costs depend on the materials and production methods employed. The choice of materials generally depends on the protection required and the marketing requirements. Protection and preservation needs depend on the nature of the product and its logistical system; fragile products and packages that will be roughly handled during distribution require more protection than do rugged products; and for perishable products to be stored, more preservation is required.

There is a growing recognition that package system development should begin early in the product development process. Packaging-related cost tradeoffs are much easier to optimize before the product is fully developed. For example, product modification to reduce fragility may be more economical than improving package protection.

Material Costs

Packaging materials include the primary package and its closure, the shipping container, and unitization materials. The cost of packaging materials depends on the cost of the raw materials (plastic, paper, wood, glass, and/or metal) plus the cost of conversion into packages to be filled. Most of the raw materials are competitively priced commodities. U.S. prices for raw materials can be found in publications such as *Plastics News* and *Official Board Markets*.

The percentage of the sales price represented by the raw material cost fluctuates, depending on commodity markets. In 2002, U.S. manufacturers of paperboard packaging spent, on average, 54% of the sales price on raw materials. It is highest for metal containers, 63%, and lowest for glass, 37% (2).

The more complex conversion processes, such as molding, coating, or laminating, add a greater percentage to the cost of converting the finished package. The conversion setup cost can also vary by container type. Conversion processes that require tooling, dies, or molds add fixed costs that are generally amortized over an initial production period.

The prices of packaging supplies are also affected by competition, vertical integration, and opportunities for intermaterial substitution. Prices are affected by general economic conditions such as recessions that result in oversupply, growth cycles that strain production capacity, and the cost of energy. The export demand for goods and for packaging materials also affects prices.

Packages can be purchased directly from the converters or from independent distributors. While a converter may offer a lower price for high-volume orders, it is rare to be able to purchase all packaging components from a single supplier. Bottles may be purchased from the bottle manufacturer, but caps, labels, shipping containers, pallets, and stretch-wrap will be purchased from other sources (although in the United States, glass bottles are often sold in corrugated fiberboard "reshipper" boxes). Independent distributors offer various components as well as entire packaging systems.

Most packaging is purchased competitively, especially when it is a standard commodity. For example, corrugated fiberboard regular slotted containers have standardized properties and are very similar when purchased from different suppliers. In order to ensure low cost, a purchaser may encourage competing firms to bid against one another. Packaging innovations, like light-weighting or material substitutions, are often introduced by one supplier competing against another.

At the same time, there is a countervailing trend to closer partnerships between packaging suppliers and purchasers. In exchange for a single-source contract, suppliers provide services such as design, quality guarantees, inventory reduction, just-in-time delivery, and customized logistics. Likewise, packages with special designs are more likely to be purchased from a single source. The supplier may work in partnership to design the package to the user's needs. For example, custom-molded bottles, trays, or plastic foam cushioning are available only from the supplier with the custom mold.

Packaging Machinery Costs

Packaging machines can be either purchased or leased. The purchase decision is evaluated like any other capital investment, judged on its net present value, by subtracting the initial investment from all cash flows from the machine's expected life of production, discounted for the time value of money. Expected income cash flows are forecast by a firm's marketing department, and the finance department crunches the numbers.

Selection of packaging machinery capacity and capability should match the expected production volume and lot sizes for the product's expected life cycle. Extremely high-volume filling operations have many dedicated single-purpose filling lines controlled by a single computer. But production plans can dramatically change in response to competitive conditions or packaging material substitutions. In order to reduce the risk of obsolescence, packaging machinery increasingly has the flexibility to run different materials and to change over quickly for different products with various lot sizes.

Package Filling Economics

Package filling operations are accounted for like any other factory operation, including inputs of direct labor, materials, energy, overhead, and shrinkage due to defects. Traditional approaches to cost reduction have focused on productivity (output/input) improvements, especially by reducing labor and energy inputs by increasing automation and by increasing machine efficiency and speed. Since successive packing machines are often linked together (e.g., filling, capping, labeling, cartooning, and palletizing), packaging line efficiency depends on a smooth flow of materials, often including master controls and a plan for accumulation to cover variation between adjacent machines.

New activity-based costing methods allow for the cost of specific operations to be more closely monitored, in order to compare alternative methods. They give packer/fillers the information needed to target productivity improvements and improve package and product quality. Planning economical production quantities, quick changeovers, and time phasing the delivery of materials can dramatically reduce costs. Improved quality control, using real-time statistical evaluation of data gathered by automated monitoring equipment on the packaging line, can reduce scrap and improve overall profitability.

In some cases it is less expensive to hire a contract packaging firm to fill packages. If production need is irregular, does not fit with current production, or is an uncertain test market, contract packaging may be more cost-efficient than filling packages in house (see also Contract packaging).

Logistical Packaging Economics

Packaging can dramatically affect the cost of distribution. For example, transportation costs are directly related to packaging cube and weight efficiency. Methods to reduce the size and weight of packaging include concentrating or nesting products, shipping products unassembled, lightweighting containers, improving the efficiency of stacking patterns in unit loads and vehicles, substituting slipsheets for pallets, and reducing the volume of cushioning materials by decreasing the fragility of products. Sometimes postponing packaging to a later time and place—for example, packing to order—can reduce packaging cube and investment dramatically.

Material-handling cost is also related to packaging; the productivity of operations like vehicle unloading and order picking depends on packaging configuration. If packages are individually handled, the cost will be much higher than if the packages are unitized in order quantities. The cost of the unitization materials is often offset by more economical mechanical handling.

Returnable packaging can often reduce distribution packaging costs if the shipping cycle is short in time and distance and if the shipper and consignee can work out the partnership details of ownership and cost sharing. Most returnable packages are initially more costly than single-trip packages, but the cost per trip can be lower. Potential returnable packaging investments should be evaluated on the basis of net present value to judge the investment's profitability. Factors to be evaluated when comparing returnable to expendable packaging include purchase cost, expendable packaging disposal cost, number of containers required for the logistical cycle, packaging management costs, and return sorting, cleaning, and transport costs (7).

The cost of distribution damage is directly related to packaging protection. But damage is not necessarily related to packaging cost. Often the cost of damage and packaging can be reduced simultaneously with a redesign that uses less materials or by substituting less expensive, yet more protective, materials. Sometimes it is more cost-effective to strengthen the product. Measurement and control of distribution damage costs is an important step in reducing packaging-related costs (see Logistical/distribution packaging).

Package Disposal Economics

It has been estimated that 76.7 million tons of packaging materials went into the U.S. waste stream in 2005, accounting for the largest component, 31%, of all municipal solid waste (MSW). MSW, generated from residences and commercial establishments, accounts for only 2.2% of the total solid waste generated; the other 97.8% includes waste from agricultural production, mining, demolition, hazardous materials and so on. More packaging is recycled than any other category of MSW: 40% of packaging was recycled in the United States in 2005 (8).

In the United States, disposal costs of MSW are paid by local governments, consumers, and businesses. Businesses pay the direct cost for disposal, and as a result they have a higher rate of recycling and more reusable packaging than do consumers. There is a trend to making consumer disposal costs more explicit, rather than hiding them in the general tax base, in an effort to encourage trash reduction and recycling. There are also "external" social costs, especially for landfilling and incineration, including possible pollution and the fact that many communities will not permit landfills or incinerators to be sited nearby. The site problem resulted in skyrocketing disposal costs; landfill tipping fees doubled in the period from 1987 to 1991, especially in highly populated areas in the Northeast. As a result, recycling of packaging materials has become more widespread. Recycling can be economically viable, but only when the reuse value of recycled material and the disposal avoidance cost exceeds the cost for collection, sorting, transporting, and reprocessing. Governments in Europe and Japan have implemented a packaging tax to help cover recycling costs.

CONCLUSION

Packaging affects every part of our market economy. There is a growing awareness at the financial level in major processing–packaging corporations that packaging represents a significant proportion of the cost of doing business. Even at 5–10% of the retail price, packaging costs can amount to hundreds of millions of dollars for a multi-billion-dollar food or beverage firm. It should be recognized that packaging costs must be analyzed in a systems approach, where the basic component purchase price is only one factor among many. Other costs include labor, machinery, distribution, development, impact of one component's cost on others', and research.

Furthermore it is increasingly recognized that packaging is more than a cost center. Packaging also directly impacts sales and profitability. A packaging innovation may have a higher purchase price than the container it replaces but can increase profits by adding value, increasing product quality, reducing damage, and improving efficiency of production and distribution.

BIBLIOGRAPHY

1. U.S. Department of Commerce, *Statistical Abstract of the United States 2007*, U.S. Government Printing Office, 2007.
2. Impact Marketing Consultants, Inc., *Marketing Guide to the U.S. Packaging Industry*, Impact Marketing Consultants, Inc., Manchester Center, VT, 2006.
3. PMMI, *Statistics on U.S. Packaging Machinery Shipments*, Packaging Machinery Manufacturers Institute, Alexandria, VA, 2007.
4. Datamonitor, *Global Containers and Packaging*. Datamonitor, New York, 2006.
5. Packaging Strategies, *Packaging by the Numbers*, J. P. A. J. Seigle, ed., Packaging Strategies, 2007.
6. International Trade Centre, *PACKit*, International Trade Centre, Geneva, Switzerland.
7. D. Twede and R. Clarke, "*Supply Chain Issues in Reusable Packaging*," *J. Market. Channels, Distrib. Syst. Strategy Manage.* **12**(1): 7–26 (2004).
8. U.S. Environmental Protection Agency, *Municipal Solid Waste in the United States 2005 Facts and Figures*, U.S. EPA, 2006.

ELECTROSTATIC DISCHARGE PROTECTIVE PACKAGING

Steve Fowler
Fowler Associates Inc., Duncan, South Carolina

Marvin Havens
Cryovac/Sealed Air Corporation, Duncan, South Carolina

INTRODUCTION

Contact and separation of any material from another generates electrical charges that, if separated quickly enough or isolated by sufficient resistance, result in what is known as *static electricity*. Indeed, the root word for electricity is *elektron*, Greek for "amber," because the Greeks originally found static electricity after rubbing amber with fur or cloth. This experiment is still repeated in school science demonstrations. Thus, static electricity can be considered to be an old and reliable scientific observation. However, protecting materials from the influence of static electricity did not become a seriously studied area until the advent of modern microelectronics.

Historically, static electricity has been a serious fire and explosion hazard for many industries from milling grain to manufacturing explosives. Dust control, choice of materials, and simple procedures were adequate solutions for these industries. Early electronics were large and robust enough to be immune to static electricity damage. However, with smaller and more dense solid-state devices, even subtle static electricity problems could destroy an entire device. Military reliability and economic losses estimated as high as $15 billion (1–3) have driven the technical understanding and development in the area now known as *electrostatic Discharge* (ESD) protective packaging.

HISTORY

People have seen static electricity for millennia. Lightning, the most spectacular example, results when charges are generated by contact and separation between air and water droplets and where water carries one charge away. When sufficient field strength accumulates for the separated charges to neutralize each other, lightning strikes. This is the same basic effect observed by walking across a carpet in the winter with rubber-soled shoes and reaching for the doorknob. In the dry air, a spark will often be observed and felt at about 10,000 V. In humid air, the voltages are less and not often felt.

Early electrical components, like resistors, capacitors, inductors, and vacuum tubes, were simple and robust enough to be virtually immune to physical damage from static electricity. The first transistors were also relatively insensitive to static because of their physical size. However, as solid-state components became smaller and faster, static sensitivity became a minor but increasing problem. Early static-control methods such as good grounding, choices of clothing materials, relative humidity control, and air ionizers were sufficient for a while. As solid-state technology progressed to ever-smaller, more complex circuits with metal oxide semiconductor technology (like CMOS and TMOS) or field-effect devices such as field-effect transistors (FETs), static became recognized as a serious problem in both manufacturing and operation. Some MOSFETs are known to be susceptible to electrostatic discharge damage at voltage thresholds as low as 150–250 V, values well below human sensitivity to static (4). While it is possible to design some static electricity protection into a chip, the best static-safe solutions for manufacturing, shipping, and storage of electrical components include electrostatic discharge protective packaging.

The military and NASA were the first to technically define and quantify static electricity problems related to electrical and electronic parts. Not only was static electricity a problem with electronics reliability, there were some unfortunate accidents believed to be caused by static, such as several missile explosions and, perhaps, the 1967 Apollo command module fire. The Department of Defense issued the original MIL Specifications that set the basis for further investigation and understanding of electrostatic discharge protective packaging (5).

CLASSIFICATION OF TYPES

Based on the type of protection required and the materials available, the original MIL Specifications divided electrostatic protective packaging into two types. In later recognition of performance differences between foils and metalized films, Type I was subdivided for a total of three types. Although MIL-Spec nomenclature and tests for electrostatic protective packaging are being phased out in favor of industry standards, they are still widely recognized.

Type I. This uses a metal or foil as a moisture barrier layer within a multilayer plastic pouch. Their electrical function is to form a metallic Faraday cage around the components to provide protection against high-voltage fields (e.g., static) and attenuate at least 25 dB or essentially all RF (radio-frequency) interference. Although the metal forms a Faraday cage, commercial Type I materials are multilayer composites of metal foils, usually aluminum, sandwiched between films with Type II surface resistivity and heat-sealing properties. This metal within this structure provides good Faraday cage protection, and the Type II film provides antistatic isolation between the electronic components and the metal foil. Type I materials are commonly referred to today as *electrostatic barrier materials*.

Type II. This uses a plastic film with a strong antistatic agent either compounded within or coated onto it. The antistatic agent must have an appropriate hydroscopic nature so that it will absorb and hold a trace of atmospheric moisture that actually provides the electrostatic dissipation layer. These materials are now called *static-dissipative materials*.

Type III. This uses a metalized layer, often vapor deposited nickel or aluminum on a polyester film, to provide a Faraday cage effect. However, because the vapor-deposited metal is thin enough to have limited transparency, the RF attenuation is limited to >10 dB.This difference in RF attenuation is the major difference between Type I and III. As with Type I packaging, commercial Type III materials are multilayer sandwiches with surface properties of Type II films. In recognition of their lesser attenuation than Type I or electrostatic barrier films, Type III films are called *static discharge shielding materials*.

TERMS AND TEST METHODS

Triboelectricity

The Greek word *tribein*, meaning “to rub,” combined with *elektron*, Greek for “amber,” defines the phenomenon we know as triboelectricity. Although the phenomena is ancient, it has been difficult to quantify and is better explained in relative terms. Table 1 is a triboelectric series of materials arranged from positive to negative, based on their charge polarities after being rubbed together. In general, when two materials on the list are rubbed together, the upper one will take the positive charge; the lower, the negative charge. Except for illustration, the triboelectric series is of little practical value since materials near each other can switch relative charge position and since the amount of charge between the two materials can vary widely (6).

However, the major point of the list is to show that common semiconductor materials and packaging materials are very low in the triboelectric series with metals higher and humans being much higher. Thus it is easy to see how a printed wiring circuit board with metal conductors, components, and connectors, all loosely held in a plastic bag and handled by human hands, can produce static electricity with possible electrostatic damage to the electronics.

Triboelectricity and its measurement has been discussed at length by the ESD Association (7). Most of the measurement techniques use a rolling or sliding test specimen that drops into a Faraday cup where the accumulated charge is measured in nanocoulombs. One method uses large (1 in. × 1 in.) cylinders of either PTFE or quartz, and another uses smaller (1/2 × 1 in.) cylinders of PTFE, quartz, or polished brass that are rolled down an inclined plane into a Faraday cup. Another method uses chips in rail magazines that are slid into the Faraday cup.

Table 1. Triboelectric Series (29)

Positive	Human hands
+	Rabbit fur
	Glass
	Mica
	Human hair
	Nylon
	Wool
	Fur
	Lead
	Silk
	Aluminum
	Paper
	Cotton
	Steel
	Wood
	Amber
	Sealing wax
	Hard rubber
	Nickel, copper
	Brass, silver
	Gold, platinum
	Sulfur
	Rayon
	Polyester
	Celluloid
	Polyurethane
	Polyethylene
	Polypropylene
	PVC
	KEL F
–	Silicon
Negative	Teflon

Other tests pull cards from bags or rub materials in a programmed way and measure the field strength developed as volts. As expected, all these tests are done with controlled humidity and temperature conditions.

Surface Resistivity

Surface resistivity is the resistance in ohms measured between two parallel electrodes on opposite sides of a square. The geometry in Figure 1 illustrates why the common units of surface resistivity are ohm/square for a measurement that is otherwise physically dimensionless. Some commercial surface resistivity measuring devices use concentric circles with a calculated “area factor” as seen in Figure 2. In either case, a given applied voltage allows a current to be measured that calculates the surface resistivity. Although test voltages are not spelled out in the specifications, relatively low voltages (50–100 V) are used, which, for the lower limits of the measurement correspond to picoampere current measurements (8).

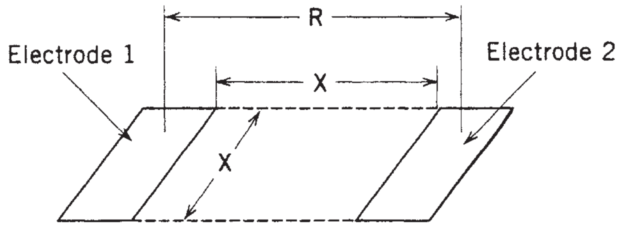

Figure 1. Surface resistivity geometry with parallel electrodes.

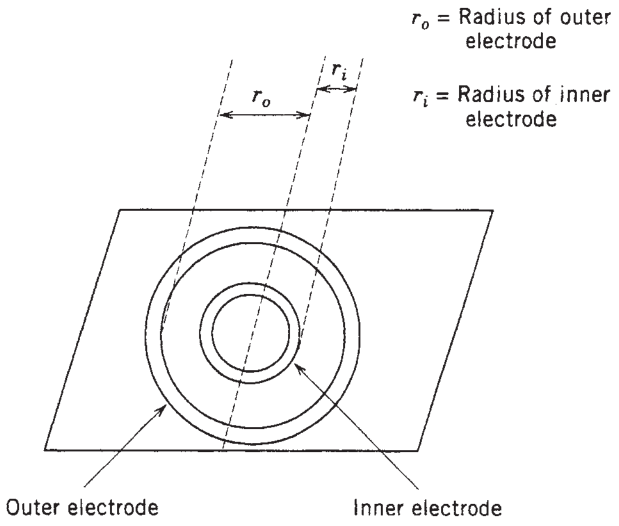

Figure 2. Alternative geometry for surface resistivity using concentric ring electrodes.

Surface resistivity can be used to broadly classify materials as conductors such as metals, insulators such as most ordinary plastics, or semiconductors as illustrated in Figure 3. Materials with surface resistivity values of $<10^5$ Ω/square are classified as conductors, those with values and above 10^{12} Ω/square are classified as insulators. Static dissipative materials are defined as having surface resistivity values between 10^5 and 10^{12} Ω/square.

There has been some discussion that surface resistivity is too simple a measurement for several factors such as the effect of film thickness and the use of multiple layers of differing resistivity values. For example, a more conductive layer below a less conductive layer can suppress the measured charges. This has resulted in a recent test method for surface resistance.

Triboelectricity and Surface Resistivity

While triboelectricity and surface resistivity have some relationship for the generation and separation of electrical charges, no good overall experimental correlation between the two has been found. One paper took an extensive variety of materials and test conditions and found no

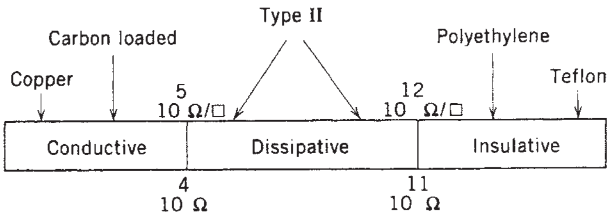

Figure 3. Surface resistivity and surface resistance ranking of common materials.

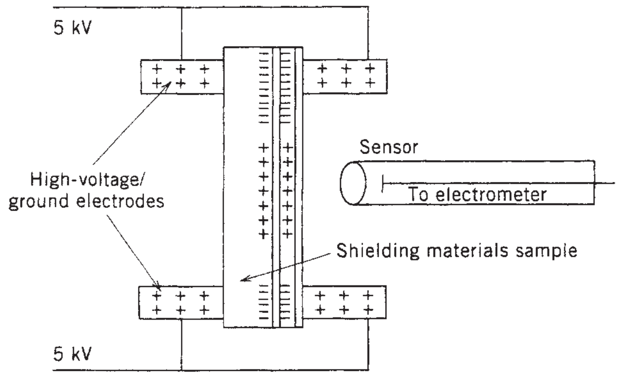

Figure 4. Static decay time fixture (5).

direct correlation (6). As stated in EIA-541-1998 and these data, it may be best to associate triboelectricity with the generation of static electricity and surface resistivity with its dissipation.

Static Decay Time. Static decay time is the time for a charge impressed on a film sample to decay to a nominal lower value. This is most often measured as the time for 5000 V to decay to 1%, or 50 V. Commercial instruments often use the fixture geometry illustration in Figure 4. They usually operate where the voltage cuts off the timer. One static decay-time measurement variant uses a digital oscilloscope to take voltage versus time values, which are then fed through an exponential decay curve-fit program that calculates the static decay time with a minimum error (9).

Surface Resistivity Versus Static Decay Time

While surface resistivity and static decay-time measurements are simple and straightforward lab procedures, there have been comparisons and discussions about their relative merit. One relatively extensive work showed data that, for homogeneous bulk additive-loaded Type II films, indicated a reasonable correlation between the surface resistivity and static decay time as illustrated in Figure 5. However, this correlation does not hold for any films with more than a single layer. Such films include the Types I and III structures with metal foils or metalized layers for RF attenuation or multilayer and coated Type II film materials (10).

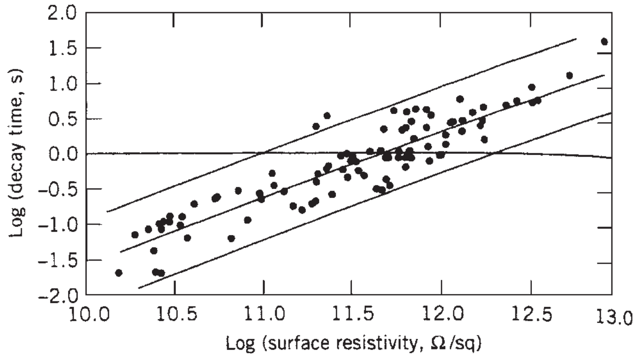

Figure 5. Correlation of surface resistivity and static decay for monolayer materials Only (10).

Surface Resistance

Because of concerns that surface resistivity was oversimplified, the ESD association prepared a new test method for surface resistance, ANSI/ESD Association STM11.11, which uses a fixed annular geometry and a fixed 100 V to measure resistance across the surface of the material to calculate resistance in ohms. This method separates the test result from any inherent resistive properties of the film. In special cases, it is possible to convert this test fixture geometry to a loose estimation of surface resistivity by

$$\text{Surface resistance } (\Omega) \times 10 = \text{surface resistivity } (\Omega/\text{square})$$

However, surface resistance is increasingly the preferred term over surface resistivity.

Volume Resistivity. Volume resistivity is the resistance of current passing through a section of film. However, even for simple homogeneous composition monolayer materials, like early Type II films, the static dissipative properties are based on atmospheric moisture absorbed on the surface, not a bulk material property. Also, because most advanced electrostatic discharge protection materials are of multilayer construction, all Types I and III plus many Type II films, *volume resistivity* is now an essentially meaningless term for these types of materials.

Static Shielding

Static shielding measures the energy that penetrates the test bag relative to the source energy. With an impressed 1000 V onto the outside of a bag containing a capacitive sensor, the current and time are plotted with a fast digital oscilloscope. The current and time are then used to calculate the energy transferred inside as nanojoules (11).

Effect of Relative Humidity

Most additives achieve either low surface resistivity or static decay-time function by attracting low levels of moisture to the film surface. For this reason, it was quickly apparent that the electrical properties would be related to relative humidity (12). In addition, moisture is quickly absorbed and slowly desorbed by strongly hydrophilic antistatic agents. Both of these were addressed by the test methods that specify the use of 10 ± 3% rh (relative humidity) at 72°F and holding the samples in a controlled environment chamber for 48 h before measuring surface resistivity or surface resistance and static decay time.

Effect of Accelerated Aging

Early Type II materials based on bulk loading of an antistatic additive into a monolayer film were found to have diminished electrostatic protection over time. This was due to the low but finite volatility of the additives used. Because fresh films would perform well, but older films would fail, an accelerated aging test procedure was needed to simulate field use. MIL Specs were developed that used held samples at 160°F for 3 days before the surface resistivity and static decay-time measurements were done. For monolayer bulk additive loaded Type II films, it is estimated that this accelerated aging test predicts performance for films between 6 and 12 months old. While other methods of achieving good surface resistivity films are less susceptible to activity loss with time, the test method has remained (28).

Corrosion

Because antistatic additives function by absorbing atmospheric moisture and weakly ionizing it, corrosion can be a problem with many metals used with electronics (14, 15). The MIL Spec considered seven metals to be important: low carbon steel, 2024 aluminum alloy, copper, silver-plated copper, SN63 solder-coated copper, 314 stainless steel, and Kovar. The test methods check for corrosion and/or surface discoloration when test films are in contact with clean coupons of these metals for 72 h at 120°F and 65% rh (5).

Polycarbonate Compatibility

Field service people from a major electronics equipment manufacturer found that polycarbonate components, like circuit board connectors, would "craze" and then crack (16). After a costly worldwide recall, the problem was traced to a Type II bag additive that could attack polycarbonate. EIA-564 standard for polycarbonate compatibility had the effect of nearly eliminating certain antistatic additives from the market films (17).

CURRENT STANDARDS

Standards generally are changed over time as additional information accumulates. On the basis of this information and the three different types of materials discussed above, the current accepted standard properties are listed in Table 2. Besides the electrical, corrosion, and polycarbonate standards, there are many more including those that cover heat seals and optical transmission for reading product codes inside a bag.

Figure 6. Antistatic additive molecules showing dual characteristics.

TECHNICAL SOLUTIONS

Early Type II Additives and Mechanism

Because Type II properties and materials are used either by themselves or as the inner or outer layers in other types of electrostatic protective packaging for good antistatic performance, they will be discussed as the base technology.

The original static-dissipative materials were based on then-current additive technologies for antifog and antistatic properties in plastic films. These additives are generally characterized as relatively long molecules with two distinctive molecular ends that can be considered "heads" and "tails" as illustrated in Figure 6. Most of the molecule's length is the tail, which is a chain of roughly 10–18 carbon atoms surrounded by hydrogen. This tail part of the molecule is nonpolar and is considered hydrophobic or polymerphilic because it prefers to "dissolve" in the polymer. The other "head" end is polar and hydrophilic and wants to diffuse out of the nonpolar polymer to the surface or "bloom." On the surface, the polar end is capable of absorbing atmospheric moisture and weakly ionizing it to create the modestly conductive electrical path necessary for static dissipation as in Figure 7. While these films use additives that were homogeneously compounded into the plastic and then extruded as a single layer, even simple "homogeneous" composition films function with distinct layers because of additive blooming to the surface.

Because the first MIL Specs required a visually distinct identification for these materials, a pink tint was added, which is why these early Type II materials are often called "pink poly."

There were some problems with the early materials. Some of these problems, like limited lifetime and water solubility of the additive, have been noted in the discussion of terms. The limited effective lifetime problem is related to a combination of blooming and the nature of additive "reservoirs" within the bulk film. As long as there is sufficient additive concentration within the film, additive diffusion to the surface will maintain a surface

Table 2. Electrical Standards for Types I–III Materials

Property	Surface Resistivity (Ω/square)	Surface Resistance (Ω)	Static Decay Time (sec)	RF Attenuation, EIA (dB)	Static Shielding, ESD-STM11.31 (nanojoules)
Type I	$<10^{12}$	$<10^{11}$	<2	>25	<5
Type II	$<10^{12}$	$<10^{11}$	<2	—	—
Type III	$<10^{12}$	$<10^{11}$	<2	>10	<50

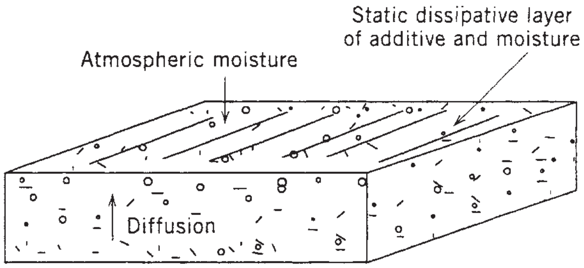

Figure 7. TYPE II film (18).

concentration sufficient for good surface resistivity. However, when the interior reservoir becomes depleted, diffusion to the surface cannot maintain the necessary surface concentration and therefore results in the loss of surface electrical properties as illustrated in Figure 8, 9. It was found that static dissipation required a higher additive concentration than for an antifog property, which made some pioneer films feel greasy. Refinement of the additives has improved this situation (18, 19).

Multilayer Type II ESD Protective Films

After recognizing that the static dissipative properties of even simple Type II films were based on distinct layers, it was inevitable that coextrusion and/or coated films would be adapted to ESD protective films to maximize the properties.

To deal with the diffusion-related limitations of the early Type II films, coated or topical antistatic films were developed. The first ones used quaternary amines (or quats), which are excellent antistatic agents but, because they are nearly incompatible with nonpolar polymers, must be topically applied. These quats were added to a compatible polar acrylate polymer that was cured with an electron beam to form a static-dissipative surface matrix (20–22). While this cured coating solved some problems with diffusion and evaporation of the additive, it was found that any contact with water would leach out the antistatic additive and, thus reduce the static-dissipative electrical property. There are some current materials that have improved compatibility between the additive and the coating matrix that resist leaching with modest water exposure.

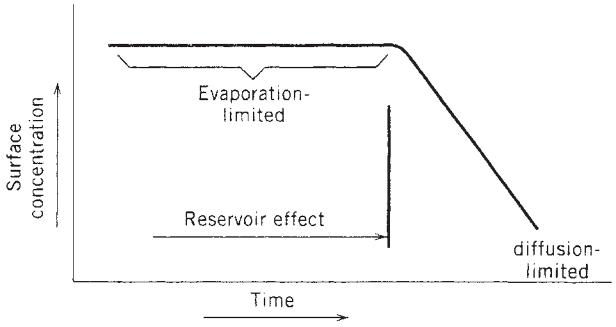

Figure 8. Reservoir effect.

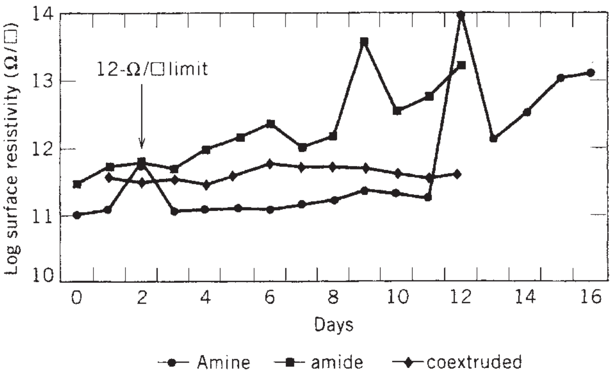

Figure 9. Log of surface resistivity versus time—reservoir effect is seen the loss of surface resistivity when the film interior becomes depleted of additive (18).

The next materials evolution utilized coextrusion of multiple layers in which different static-dissipative properties could be incorporated. One of the first of this type used high-density polyethylene (HDPE) skins over a quat-loaded polar polymer matrix blended into less polar polymers as illustrated in Figure 10. This structure buried the static-dissipative layer behind insulating layers. This material had static decay times that met the then-current MIL Spec, which required that a Type II film have either static decay time of <2 s or surface resistivity between 10^5 and 10^{12} Ω/square. This structure of insulators over static-dissipative layers was a major advantage because the film surface was virtually free of contamination. This same coextrusion technology was used to make low-surface-resistivity film shown in Figure 11 (18).

Additive Chemistry and Polycarbonate Compatibility

As discussed previously, some expensive problems related to additives crazing polycarbonate were encountered. In these, ethoxylated amines were found to be the worst for their effect on polycarbonate. Polymers, like other chemistry, follows the rule "like dissolves like." While amines can begin to dissolve into polycarbonate, the polycarbonate is so rigid that it cannot swell to accept the amine molecule; instead, it forms a surface crack or "craze." These surface cracks can expand until the polycarbonate piece breaks. Fortunately, ethoxylated amides and

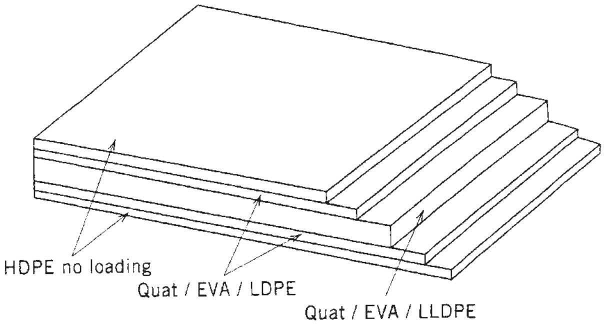

Figure 10. Multiple-ply static dissipative film with clean skins.

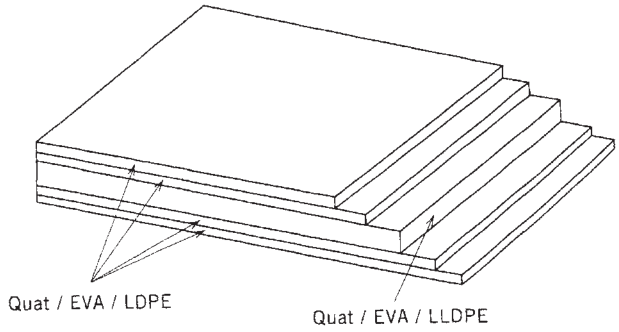

Figure 11. Multiple-ply static dissipative film with low surface resistivity skins.

quaternary amines were found to be more polycarbonate compatible as well as have good antistatic properties. Typical chemical structures are shown in Figure 12. The polycarbonate compatibility is illustrated in Table 3 (18).

Types I and III Mechanism via Faraday Cage. Types I and III materials have a common MIL Spec heritage that is differentiated only by the degree to which they attenuate RF interference. They function by creating a Faraday cage effect where electrical charges repel each other to the maximum extent possible—that is, on an exterior surface. The electrical field inside the package is essentially nil. The foil is a barrier to EMI and moisture as well as static. With Type III, the vapor-deposited metal is controlled to a thickness that is somewhat transparent but achieves static discharge shielding and EMI shielding of at least 10 dB.This allows one to read some label or bar-code information through the bag without opening it and still have a high level of ESD protection. The polyester substrate film also often provides more physical protection than a foil in a polyethylene-based film sandwich (23).

Because foils and metalized films are relatively fragile against printed circuit boards with many edges and devices and because their metallic nature can help transmit some charges into the contents, commercial Types I and III materials are laminated with Type II films. This provides physical protection and a modestly conductive static-dissipative layer between the electronics components and the shielding metal layer as illustrated in Figure 13 (24). Some Type I and III bags are laminated with extruded Type II films; others use static-dissipative coatings on regular films.

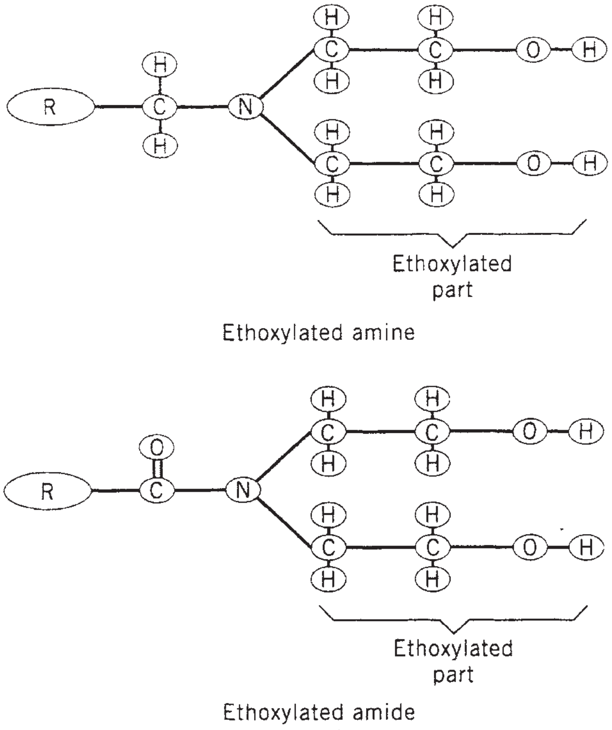

Figure 12. Typical antistatic additive molecules.

Heat-Shrinkable ESD Protective Packaging

Most ESD protective packages are loose-fitting bags that function by surface static dissipation but offer no mechanism to minimize static generation by friction within the bag. To address this need, static-dissipative chemistry and structures have been adapted to heat-shrink films that, when heat-shrunk tight onto the electronics, essentially eliminate motion within the package. The exterior is then protected by the static-dissipative surface of the shrink film. Electrostatic discharge protective heat-shrink films have not been possible using metals or metallized materials and are therefore all Type II in their performance.

The first antistatic shrink films were based on multiple-ply coextrusion, which encapsulates the additive containing layer within two “clean” skin layers. This trapped the additive and effectively eliminated corrosion and polycarbonate compatibility problems but is not currently on the market (4, 25). It has been replaced, in part, by straightforward commercial shrink films that are coated with special antistatic additives.

Table 3. Polycarbonated Compatibility (17): Highest Compatible Stress Level (psi)

	Temperature			
Material	73°F	120°F	158°F	185°F
Ethoxylated amine	2500	1700	<1000	<1000
Ethoxylated amine	3400	2500	1700	1000
Quaternary amine	3400	3400	2500	2000
Control (air)	3400	3400	2500	2000

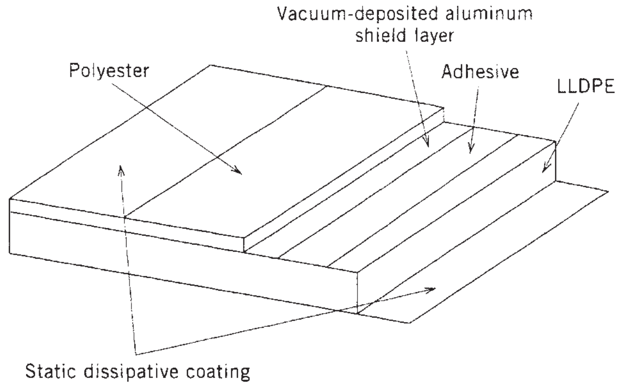

Figure 13. Typical Type III metallized bag laminated construction.

Inherently Static-Dissipative Polymers for ESD Protective Packaging

Several classes of inherently antistatic polymer have been utilized experimentally in electrostatic discharge protective packaging (26–28). While the most public attention is given to inherently conductive polymers, like polyacetylene, these polymers are often so rigid or insoluble that their packaging applications are limited. Also, in the case of polyacetylenes, these often need to be doped with some other material like iodine to achieve their conductivity. Most dopants like these are also inherently corrosive and therefore unacceptable.

One class of inherently static dissipative materials that was found to have workable properties is poly(amide ethylene oxide) block copolymers. On the molecular level, these polymers incorporate hydrophilic poly(ethylene oxide) (PEO) block segments into a polyamide (nylon) structure. The polyethylene oxide absorbs and holds a sufficient amount of water to achieve static dissipation. The PEO segment length and choice of nylon are important to balance the moisture absorption for surface resistivity versus moisture that blocks heat seals (28).

In all cases discussed so far, the major drawback to the inherently static-dissipative polymers has been cost. Few materials can compete effectively with combinations of additives compounded into or coated onto inexpensive resins like polyethylene and metalized polyesters or foils that are sandwiched with static-dissipative polyethylene.

Polymer Systems with Conductive Fillers

Conductive fillers in conventional polymers were considered a means of achieving high conductivity for static dissipation. These fillers have included aluminum flakes, carbon powders, carbon flakes, nickel-coated carbon fibers, nickel-coated mica flakes, and stainless-steel fibers, to name a few. In general, once a conductive filler is added in sufficient quantity to physically connect particle to particle, the resin matrix becomes essentially metallic in electrical conductivity. The practical problems have been numerous and include opacity, reliable extrusions, electrical properties, and relative cost. In general, these systems are applicable to injection or compression molding but have limited use with films. A carbon-loaded film was successfully marketed for a while with a modest surface resistivity. However, it fell into disfavor when it was noticed that the black bag would leave pencil-like black streaks that were conductive. Conductive fillers have not been satisfactory solutions for flexible packaging materials.

ORGANIZATIONS CONCERNED WITH ESD PROTECTIVE PACKAGING AND APPROPRIATE STANDARDS

Given the safety and economic issues behind EMI and electrostatic discharge shielding, static dissipative, and antistatic protective packaging, it was not surprising that a group of organizations have participated in opening communications and formulating standards. The four groups listed below have issued pertinent standards for the industry.

American Society for Testing Materials (ASTM)

D 257, *Standard Test Methods for DC Resistance or Conductance of Insulating Materials*

D 991 *Standard Test Method for Rubber Property—Volume Resistivity of Electrically Conductive and Antistatic Products*

Department of Defense

Federal Test Method Standard 101C, *Method 4046.1 Test Procedures for Packaging Materials—Now Mil-Std 3010,* Test Procedures for Packaging Materials.

MIL-PRF-81705D Military Specifications, *Barrier Materials, Flexible, Electrostatic-Free, Heat Sealable.*

MIL-HDBK-263 Military Handbook, *Electrostatic Discharge Control Program for Protection of Electrical and Electronic Parts, Assemblies and Equipment.*

MIL-HDBK-773 Military Handbook, *Electrostatic Discharge Protective Packaging.*

MIL-STD-883, *Test Methods and Procedures for Microelectronics.*

MIL-STD-1686, *Electrostatic Discharge Control Program for Protection of Electrical and Electronics Parts, Assemblies and Equipment.*

Electronic Industries Association*

EIA-541, *Packaging Material Standards for ESD-Sensitive Items.*

EIA-564, *Standard Test Method for Chemical Compatibility of Polycarbonate by Stress Crazing Evaluations.*

EIA-583, *Packaging Material Standards for Moisture-Sensitive Items.*

---

* Now called Electronic Industry Alliance (EIA). Address: 2500 Wilson Blvd., Arlington, VA 22201-3834.

ESD ASSOCIATION[†]

ESD ADV 1.0-2004 *For Electrostatic Discharge Technology—Glossary.*

ANSI/ESD STM 8.1-2001, *ESD Awareness.*

ANSI/ESD STM 11.11-2006, *Surface Resistance Measurement of Static Dissipative Planar Materials.*

ANSI/ESD STM 11.12-2000, *Volume Resistance Measurement of Static Dissipative Planar Materials.*

ANSI/ESD STM 11.13-2004, *Two Point Surface Resistance Measurement.*

ESD ADV. 11.2-1995, For Protection of Electrostatic Discharge Susceptible Items—Triboelectric Charge Accumulation Testing.

ANSI/STM 11.31-2006, *For Evaluating the Relative Performance of Electrostatic Shielding Bags.*

ANSI/ESD S541-2003 *For the Protection of Electrostatic Discharge Susceptible Items—Packaging Materials for ESD Sensitive Items.*

ANSI/ESD S20.20-2007 *For the Development of an Electrostatic Discharge Program for Protection of Electrical and ElectronicParts, Assemblies and Equipment (Excluding Electrically InitiatedExplosive Devices).*

BIBLIOGRAPHY

1. "The ESD Control Process Is a Tool for Managing Quality," *Electron. Packag. Prod.*, 50–53 (April 1990).
2. J. Jesse, "ESD Control," *EOS/ESD Technol.*, 13 (December–January 1988).
3. R. J. Pierce, "Static Control Pays," *EOS/ESD Technol.*, 14–19 (April/May 1990).
4. M. R. Havens and D. L. Hines, "Static Protection through Shrink Packaging," in *Proceedings, Technical Program*, Vol. II, NEPCON West, Anaheim, CA, February 23–27, 1992, pp. 821–827.
5. MIL-B-81705, Military Specification, *Barrier Materials, Flexible, Electrostatic Protective, Heat Sealable*.
6. S. L. Fowler, "Triboelectricity and Surface Resistivity Do Not Correlate," in *EOS/ESD Symposia Proceedings*, in press.
7. W. Klein, "On Resistivity," *Threshold,* pp. 6–9 (EOS/ESD Association Newsletter (now the ESD Association) (March 1990).
8. S. Fowler, J. Lovin, and B. Carson, "Computer Analysis of Static Decay Curves," *Threshold*, 1–3 (September 1987).
9. S. L. Fowler, "Surface Resistivity and Static Decay Do Not Correlate," in *EOS/ESD Symposia Proceedings*, New Orleans, September 26–28, 1989, pp. 7–11.
10. ESD Assoc. S 11.3.1, *For Evaluating the Relative Performance of Electrostatic Shielding Bags*.
11. L. E. Walp, T. E. Breuer, and S. E. Golyer, "Modification of the Electrostatic Behavior of Polyolefins," in *ANTEC 86 Proceedings*, SPE Annual Technical Conference, 1986, pp. 1141–1143.
12. J. M., Kolyer and J. D. Guttenplan, "Corrosion and Contamination by Antistatic Additives in Plastic Films," in *EOS/ESD Symposia Proceedings*, 1988.
13. Steve Fowler, "Do We Have and Aging Test? (for ESD Packaging)," *The ESD J.* (2005), http://www.esdjournal.com
14. B. Borodoli, "Characterization of Corrosivity of Antistatic Packaging Materials," in *EOS/ESD Symposia Proceedings*, 1988.
15. W. Kropf and S. Royce, "Qualifying ESD-Protective Materials," *EOS/ESD Technol.*, 20–24 (February/March 1990).
16. M. R. Havens, "Understanding Pink Poly," in *EOS/ESD Symposia Proceedings*, New Orleans, September 26–28, 1989, pp. 95–101.
17. M. R. Havens, "The Chemistry of Pink Polyethylene," *EOS/ESD Technol.,* 8–18 (February/March 1990).
18. H. Keogh and G. T. Sydney, "The Versatility of Electron Beam Processing and the Conversion of Medium and High Performance Films for ESD Protection," in *EOS/ESD Symposia Proceedings*, September 11–13, 1990.
19. H. Keogh, "Electron Beam Radiation Cured Coatings for Static Control," in *EOS/ESD Symposia Proceedings*, in press.
20. H. Keogh, "Antistatic Resin Composition," U.S. Patent 4,623,594 (November 18, 1986).
21. "Transparent Bags Foil Static Electricity's 'Zap'," *Package Eng.*, 104–107 (January 1983).
22. L. Mott, "Antistatic Sheet Material and Package," U.S. Patent 4,756,414 (September 15, 1992).
23. D. L. Hines and W. V. Duncan, "Shrink Film Packaging Evaluation," in *EOS/ESD Symposia Proceedings*, Dallas, September 6–18, 1992, pp. 5A1.1–5A1.3.
24. T. E. Fahey and G. F. Wilson, "Inherently Dissipative Polymer Films," in *EOS/EST Symposia Proceedings*, Dallas, September 16–18, 1992, pp. 5A3.1–5A3.6.
25. T. R. Maas, "ESD Polymer Alloys: An Alternative Approach for Producing Permanently Antistatic Polyethylene," in *EOS/ESD Symposia Proceedings*, September 11–13, 1990.
26. M. R. Havens, "Inherently Static Dissipative Packaging Films," in *EOS/ESD Symposia Proceedings*, Las Vegas, September 24–26, 1991, pp. 204–209.
27. "Conductive Thermoplastics Compounded for Static Control Applications," *Compliance Eng.* (in press).
28. MIL-HDBK-263A, *ESD Control Handbook for Protection of Electrical and Electronic Equipment*, Naval Sea Systems Command, Washington, DC.

ENVIRONMENTAL REGULATIONS, NORTH AMERICA

MICHELLE RAYMOND
Raymond Communications,
Inc., Silver Spring, Maryland
Updated by Staff

INTRODUCTION

Environmentalists started the trend toward recycling mandates on packaging because of the "Stop Styro" campaign, originating in Berkeley, California in 1987. The greens used the McDonald's foam clamshell as a

---

[†] ESD Association (aka Electrical Overstress/Electrostatic Discharge Association or EOS/ESD Association). Address: 7900 Turin Road, Bld 3, Rome, NY 13440-2069. http://www.esda.org

"symbol," something consumers could easily identify. They told consumers to stop using polystyrene foam (often misidentified as *styrofoam*, a Dow Chemical trade name). Thus, eschewing PS foam became a simple way consumers could do their part to save the earth.

The original rationale for banning foam was that it was not degradable in landfills, was not made of a renewable resource, used toxic chemicals in manufacture, killed sea life when ingested (allegedly styrene leaches into food from the containers), and uses harmful CFCs. The plastics industry formed a new group (Council for Solid Waste Solutions) to lobby plastics waste issues in general. CSWS (Now American Plastics Council) had to hire lobbyists throughout the country to combat the new wave of PS foam bans.

Since this historical event, environmental regulations have expanded into all forms of commerce and regulations have increased many-fold. Environmental regulations involving recycling and solid waste management affect the packaging industry most.

The United States Environmental Agency's official statement on packaging states that in most parts of the developed world, packaging constitutes as much as one-third of the nonindustrial waste stream. As more countries are raising their standards of living, more countries are seeing significant growth in packaging waste. At least 28 countries have laws designed to encourage recycling and reduced packaging. Many countries require manufacturers to take back packaging discards or pay for their recycling.

There are no federal package mandates of a similar nature in the United States. States and local governments concern about waste continues to grow. New containers emerge that complicate recycling. Demand for secondary materials from abroad have put increased pressure on recyclers who are competing for limited feedstock.

Packaging can be made more sustainable by applying the principles of product stewardship: eliminating toxic constitutents; using less material; making packaging more reusable; using more recycled content; and making it more readily recyclable (1).

All of the 50 states plus 12 of the Canadian provinces have environmental agencies and regulations that cover state, local, and municipal laws. Basically, they all follow the mandate; for example, New Hampshire Title X-Chapt 149-M states that waste management rules are in place to to protect human health, preserve the natural environment, and conserve dwindiling resources through proper management of waste. The reader is advised to check the web sites for the individual states of interest. Examples of rules from some states are given in the following discussion.

WASTE MANAGEMENT/RECYCLING

The individual United States and provinces of Canada have laws on the books that reflect the product stewardship principles of the U.S. EPA. New York State's Solid Waste Management Act of 1988 sets out the principles of reduce, recycle, and reuse. The California Beverage Container Recycling and Litter Reduction Act, effective as of September 1986 and amended in January 2008, sets out the law for efficient and large scale bottle and container recycling. Sections 14500–14501 declare that California's intent is to gather manufacturers, distributors, and consumers to join in a large-scale redemption and recycling of beverage containers. The recycling goal was set out as 80%; and when any one type of container falls below 65%, an increased refund value is increased. (This may be eliminated by a new law presented to the California Legislature in 2008.) The Legislature also urged cities and counties to make redemption and recycling centers available to the public. The responsibilty to provide redemption opportunities rest jointly with manufacturers, distributors, dealers, recyclers, processors, and the Department of Conservation. It established this act to significantly reduce beverage container litter in the state.

In addition, industry has accepted recycling. Coca Cola wants to set a goal of 100% recycling of its cans. Coca Cola will recycle more than 100 million pounds each of PET and aluminum (2).

RECYCLED CONTENT MANDATE

Some states have minimum recycled content standards for plastics (CA, OR, WI), glass containers (CA, OR), and trash bags (CA).

California Beverage Container Recycling and Litter Reduction Act Section 14549 states that every glass container manufacturer shall report to the California Department of Conservation the amount of total tons of new glass food, drink, and beverage containers and the tons of California postfilled glass used in manufacturing these containers. Each glass manufacturer shall use a minimum of 35% postfilled glass in the manufacture of glass beverage and food containers measured on an annual basis; but if a glass manufacturer demonstrates that its use of postfilled glass during the annual period is made up of at least 50% mixed color cullet, then the manufacturer may use a minimum of 25% postfilled glass. A new law in California (AB 2449) covers the recycling of plastic bags.

Oregon's Rigid Container Recycling law (Or Rev St 459A.650-655) required that by 1995 all rigid containers must contain 25% recycled plastics or plastic resins that are recycled at a rate of 25% or must be reused at least five times.

Wisconsin has a law that requires 10% recycled content in rigid plastic containers eight ounces and over.

LANDFILL BANS

All states have landfill bans. They cover a whole spectrum of waste from batteries, appliances, and yard waste to newspaper and packaging materials. Wisconsin is one of the first states to enact sweeping landfill bans. Laws were enacted to manage waste reuse and recycling (Adminstrative code NR542-549). In the 1990s when The Waste Reduction and Recycling Law was passed, 17% of waste was recycled. By the end of 2004, when laws on landfill bans and recycling were fully implemented, recycling rose to 32%.

In 1995, Wisconsin's law was amended to include packaging materials. Forbidden in landfills are aluminum and steel containers, glass containers, corrugated cardboard, plastic containers, polystyrene foam packaging, and bi-metal containers, Plastics #3–7 can be landfilled or incinerated. If a market will exist for recycling of these plastics, they will be banned from landfills.

North Carolina was the benchmark state for local landfill bans. A total of 32 communities at first had some sort of local landfill bans in this #2 manufacturing state. Some just banned corrugated containers (OCC), others banned all kinds of recyclables. The bans forced businesses to recycle and push haulers to either set up routes or pull out OCC at landfills when the price was right.

DEPOSITS/BOTTLE BILLS

The term “bottle bill” refers to a container deposit law; that is, a refundable deposit is paid on a beer, soft drink, or other beverage container at time of purchase.

In 1971, Oregon passed the first bottle bill in the United States (3). The law covered all beer and soft drink containers. By 1986, ten states enacted some form of bottle bill. Some of these states cover water, juice, and other beverages not included in the Oregon bill. In 2009, Oregon will make its first change to its original bill by covering bottle water and flavored bottled water (4)

In 2008, eleven states and twelve Canadian provinces have a deposit law. Several states and provinces have expanded their laws to cover beverages such as juice and sports drinks, tea, and bottled water; beverages that did not exist when most bottle bills were passed. The eleven U.S. states are California, Connecticut, Delaware, Hawaii, Iowa, Maine, Michigan, Massachusetts, New York, Oregon, and Vermont

These bills were intended to reduce beverage container litter. Now the protection of natural resources through recycling and reduction of solid waste going to landfills are the goals. Seven states reported a reduction in beverage container litter ranging from 73% to 83%.

Unclaimed or unredeemed deposits have been determined to be the property of the distributors and the bottle bill states. These containers are considered abandoned by the public and involve millions of dollars a year.

There are still areas where food packagers have been successful in defeating proposed bottle bills such as in Columbia, Missouri in 2007. Also, there have been complaints that redemption rates are declining because deposits are not keeping up with inflation. However, Senator Ed Markey of Massachusetts has introduced an amendment to the Solid Wastes Disposal Act to require a refund value for certain beverage containers (of metal, glass, or plastic or in combination) and resources would go to the state for pollution prevention and recycling. This Bottle Recycling Climate Protection Act (introduced November 5, 2007) would apply to all of the United States. States with high recycling rates would be exempt (5).

HEAVY METALS BANS

The model Toxics in Packaging Bill, developed by the Coalition of Northeastern Governors (CONEG), is law in 18 states. In 1995, six states moved to amend the law in an effort to clean up some loose ends (6).

The model bill states that no package may be sold if any packaging component (including inks, dyes, pigments, adhesives, stabilizers, or other additives) contains lead, cadmium, mercury, or hexavalent chromium intentionally introduced during manufacture or distribution. The law usually gives manufacturers two years to phase down to 600 ppm; then 250 ppm, with 100 ppm after four years. The model law allows state regulators to later institute bans on other heavy metals if they are found to be a threat.

GREEN AND ECO-LABELING

Laws are on the books in many states to guard against false claims of environmental value. An ecolabel identifies overall environmental preference of a product within a product category based on life-cycle considerations. In contrast to self-styled labels, these labels are awarded by an impartial third party. Ecolabeling is a worldwide effort. It is, however, only one type of environmental label and gives the consumer information about the relative environmental quality of a product In North America, the Global Ecolabelling Network Secretariat is located in Ottawa, Ontario, Canada (7) The International Organization for Standardization has undertaken efforts to attempt to standardize three major voluntary environmental labeling types. Type 1: environmental labels; Type 2: self-declaration claims; and Type 3: environmental declarations, for example, report cards and information labels. ISO 14020 guiding principles for labeling, including ecolabels, are accuracy, avoiding unecessary trade barriers, scientific basis, provision of information on methodology, life-cycle approach, allowance of innovation, minimal adminstrative burden; open consensual process; and provision of information on products. Companies that want to participate in an ecolabeling program make application and submit products for third-party testing. If approved, the companies pay licensing fees for permission to use the program’s label for a specified period. Ecolabeling is a voluntary policy instrument. An increase in certified products indicates that producers or providers see an advantage is displaying the label. Consumer surveys indicate that there is a preference for products perceived as environmentally positive. The willingness of consumers to pay for green products has been regularly confirmed. However, surveys show that superior environmental performance generally only becomes a key competitive factor once product performance, quality, and value have become established.

Green Seal, Inc., is a third-party certification organization in the United States. One of their certifications involves paper products used in food preparation (8).

RESIN CODING

The resin identification code developed by the Society of the Plastics Industry in 1989 was intended to assist plastic recyclers in sorting bottles by resin type. Even though there are thousands of different resin grades used by

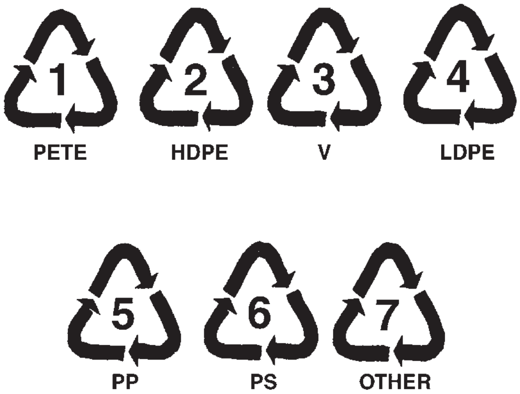

Figure 1. Identifications and abbreviations for seven types of resin grades.

industry, a committee decided on some basic identification numbers and abbreviations for seven types as shown in Figure 1.

Some of the states objected to the codes at first because of a concern that the code would be used as a recycling symbol, and not all resins are welcome in curbside bins. Nevertheless, the SPI model bill was pushed and passed in 39 states. While there still is much confusion, industry and consumer/government interests have been unable to agree on an acceptable change in the code.

Many companies inappropriately use the SPI code as a green claim on bags, nonretail bottles, and clamshells, which are unwelcome in curbside bins. Even though two states technically require the code on plastic clamshells, legal experts say there have never been any enforcement actions against companies not using the code.

If companies are using blends of polymers or multilayer bottles that recycle, then experts say it is generally acceptable to put that resin number (e.g., PET) on the bottle. Many large companies have in practice.

NAFTA/MEXICO

The North American Free Trade Agreement (NAFTA) came into effect January 1, 1994. The agreement sets out rules for trade among Canada, the United States, and Mexico. Mexico faces severe environmental degradation. Mexico's principal environmental law is the General Law of Ecological Balance and Environmental Protection, in effect since 1988.

Mexico generates about 80,000 t of municipal waste every day. About 70% of this is collected every day, but only a fraction is adequately transported or deposited in a sanitary landfill. Mexico is serious about solving its severe environmental problems. It is believed that there is an extraordinary opportunity for U.S. environmental firms to export solutions to Mexico. ACCESS-MEXICO is a low-cost program and source of Mexico's environmental laws in English. It is considered to be a key element in reducing barriers between the United States and Mexico and is a source of information for anyone wishing to do business in Mexico (9).

BIBLIOGRAPHY

Michelle Raymond, "Environmental Regulations, North America" in *The Wiley Encyclopedia of Packaging*, 2nd edition, John Wiley & Sons, New York, 1997, pp. 351–355.

Cited Publications

1. "Product Stewardship, Packaging," United States Environmental Protection Agency, www.epa.gov, updated July 2007.
2. "C-C Sets Recycling Goal," *Atlanta Business Chronicle,* December 13, 2006.
3. "Oregon Bottle Bill," Oregon Department of Environmental Quality, www.deq.state.or.us, accessed March 2008
4. *Fact Sheet, the Expanded Bottle Bill,* State of Oregon Department of Environmental Quality, June 26, 2007.
5. *Bottle Bill Resource Guide,* Container Recycling Institute, www.bottlebill.org, updated July 2007.
6. New York State Hazardous Packaging law (article 37), www.dec.ny.gov/chemical.
7. *Introduction to Ecolabelling,* Global Ecolabelling Network, Ottawa, Canada, July 2004.
8. "Paper Used in the Preparation of Food, *Green Seal's Standards and Certification,* Green Seal, January 1, 1997, www.greenseal.org/certiifcation/standards.
9. "Environmental Issues/Mexico," U.S.-Mexico Chamber of Commerce, www.usmcoc.org, April 2005.

General References

U.S. Recycling Laws by State, Raymond Communications, Silver Spring, MD, August 16, 2004.

Green Labeling: A Global Guide for Marketers and Manufacturers, Raymond Communications, Silver Spring, MD, August 18, 2005.

ENVIRONMENTAL IMPACT OF PACKAGING

Susan Selke
School of Packaging, Michigan
State University, East Lansing,
Michigan

The term *environment* subsumes many concepts related to how packages and packaging systems function in the broader context of our planet, its people, and its ecosystems. Increasingly, packaging designers, manufacturers, and users are paying attention to the environmental impacts of packaging. This is being driven by a combination of (a) pressure from consumers and from regulators and (b) the desire of business and industry to engage in responsible corporate citizenship. In this article, we discuss the broad topic of environmental impacts of packaging and provide an overview of some of the major current environmental concerns impacting packaging. We will examine the solid waste impacts of packaging and the topic of sustainability in greater detail.

LIFE CYCLE ASSESSMENT

In discussing the environmental impacts of packages and packaging systems, a key concept is the need to take an approach that looks at systems and that encompasses the entire life cycle. For example, if we were to determine whether glass bottles or steel cans were environmentally preferable based on the energy use in filling alone, we would obviously be neglecting a vast array of considerations that are also important. Similarly, if we were to attempt to decide whether packaging juice in pouches was environmentally preferable to packaging it in bottles, we might reach an inappropriate conclusion if we failed to consider the requirements for the associated distribution packaging (not to mention other aspects of the transport and delivery system).

Therefore, there is general agreement that the appropriate framework for evaluating environmental impacts must include (a) the whole system and (b) the entire life of the item being evaluated, from "cradle to grave." This approach is known as *life cycle assessment* or *life cycle analysis* (LCA) and is the analysis of the environmental impacts of product or process systems, including packaging, with the goal of selecting those that have the least overall adverse environmental impacts, or of modifying systems to diminish those impacts.

While actually performing an LCA is fraught with complications and can be extremely sensitive to the assumptions and data used, not to mention the difficulty in making decisions from the complex sets of information generated, there is general agreement that this is the correct philosophical approach to use. We will not discuss LCA in detail, but rather will use the concept as an organizing principle for this discussion.

A wealth of information is available on LCA, and extensive efforts are underway to further develop this methodology. One of the primary sources of information is the Life Cycle Initiative developed by the United Nations Environmental Program (UNEP) in cooperation with the Society for Environmental Toxicology and Chemistry (SETAC) (1). There are also a variety of LCA studies of particular materials and systems. Unfortunately, some of these reach contradictory conclusions. Increasingly, computer-based systems are available to calculate LCAs, but they too often fail to provide adequate information about the underlying data and assumptions used. Because of the complexity of doing full-fledged LCAs, there is also considerable interest in and development of modified LCAs, which are more limited in their approach and provide data in a form that is much easier to use for decision making, even though it is less complete. The Wal-Mart "Scorecard" can be regarded as one of these (2).

RESOURCE DEPLETION AND CONSERVATION

Depletion of natural resources may occur when nonrenewable resources are utilized in the production of packaging materials. For example, the manufacture of aluminum cans may consume aluminum ore, which is a finite resource. (On the other hand, ore is not consumed if the cans are made from 100% recycled aluminum.) Whether this is a serious concern is dependent in large part on the relative scarcity or abundance of the resource in question, as well as on the amount that is used for packaging. For example, large amounts of sand and sandstone are used in the production of glass bottles, but the earth's supply of this resource is abundant, so resource depletion is not a serious concern. In contrast, the earth's supply of chromium is rather small, but only relatively tiny amounts of chromium are used in the manufacture of tin-free steel for packaging, so while the overall global depletion of chromium might be a concern, packaging does not play a significant role in such depletion. In principle, use of renewable resources is less of a concern than use of nonrenewable resources since renewable resources, by definition, can be replenished. The major raw materials used for all the major packaging materials (wood, paper, aluminum, steel, glass, and plastics) are, fortunately, relatively abundant at this time, at least to the extent that serious shortages are not likely to arise in the near future, given current and projected patterns of use. Future availability of petroleum and natural gas for plastics is likely the most serious concern. However, manufacture of plastics packaging is responsible for much less than 5% of petrochemical resource use; and when life cycle energy is included, plastics often use less total petrochemicals than do competitive materials.

Of course, recycling of materials can extend their availability by reducing demands on the resource base.

ENERGY

In addition to material resources, packaging is also a consumer of energy resources. The typical mix of energy resources used differs by material. In the production of paper, renewable biomass (wood) is a major energy source, as well as being the primary raw material. On the other hand, in production of paper from recycled fiber, petroleum products are the primary energy source. For plastics, petroleum and natural gas are both raw materials and energy sources. The aluminum industry is heavily dependent on electrical power, and production of aluminum metal from ore is highly energy-intensive. The glass industry relies primarily on natural gas and electricity as energy sources. The manufacture of steel from ore uses coal as the primary energy source. Transporting of packaging materials of all types uses primarily petroleum-based energy. All packaging materials use electricity at various points in their manufacture. Electricity is not a primary energy source and depends on a mix of energy technologies, including hydroelectric and nuclear power, but in the United States is most heavily dependent on coal. Modification of packaging processes to make them more energy-efficient can result in significant cost savings as well as environmental benefits. Beginning in the late 1970s and early 1980s, increasing fuel prices and consequent interest in energy efficiency led to a number of studies comparing the energy use of various alternative packaging systems for products (3–5). These are the forerunners of more recent life-cycle assessment studies.

Waste-to-energy incineration can recover valuable embedded energy from combustible packaging materials and thus diminish dependence on other fuel sources.

POLLUTION

Emission of air and water pollutants during the manufacture, distribution, and disposal of packaging also impacts the environment. Different packaging materials are associated with different types of pollution concerns. Manufacture of paper, for instance, produces water effluents with a high load of organic materials, producing a significant biological oxygen demand (BOD). In the manufacture of plastics, on the other hand, air emissions of volatile organics are generally a more serious concern than water emissions. For all types of packaging materials, proper control and treatment of effluent streams is important for protection of the environment, and is mandated by government regulations. This is true not only for manufacture of packaging materials but also for the converting processes that change these materials into packages. The practice of waste minimization (defined as reduction of the production of toxic materials), commonly practiced in the chemical industry, can also have benefits for the packaging industry in dealing with requirements for proper treatment of effluent streams. Simply put, if a toxic material is not used or produced, it will not be present in effluent streams and thus will not require treatment for its removal. An example that is commonplace in packaging is the substitution of water-based inks and adhesives for solvent-based systems in a variety of printing and converting operations. This substitution enabled many converters to avoid the necessity of installing expensive air pollution control systems to collect volatile organics when new air emission regulations were enacted. Three particular types of pollution concerns have been regarded as of particular importance in recent years.

Ozone Depletion

In the mid-1980s, it was discovered that an “ozone hole” was formed over Antarctica in the spring, and a vast body of scientific evidence has since accumulated linking the destruction of stratospheric ozone throughout the globe with chlorofluorocarbons (CFCs) and similar compounds. As a result, there has been a global phase-out of ozone-depleting substances (ODS). There is no longer any manufacture of CFCs in industrialized countries. This is essentially now a non-issue for packaging, because the necessary changes in aerosol propellants and foams are for the most part complete, worldwide. Nevertheless, it will still be a number of years before the ozone layer returns to its normal condition. The 2006 international report on ozone depletion predicts that ozone levels in Antarctica will return to pre-1980 levels by about 2060–2075 (6).

Global Warming

In the late 1980s, a number of scientists became increasingly concerned about the possibility that increases in the atmospheric concentration of carbon dioxide and other “greenhouse gases” were acting to increase average global temperatures. Potential consequences of such temperature rise were believed to include an increase in ocean levels and consequent flooding, changes in rainfall patterns, change in ecosystems with adverse effects on animal and plant populations, and a variety of other effects, including increases in the number and severity of tropical storms.

Subsequent developments have increased the evidence base that global temperatures are in fact increasing, and better understanding of the mechanisms behind global climate has led to a clear scientific consensus that anthropogenic greenhouse gases are leading to increasing global temperatures and rising sea levels. In 2007, the Intergovernmental Panel on Climate Change (IPCC) released its 4th Assessment Report (7).

Among the IPCC findings are that global temperatures have increased by about 0.6°C (1.1°F) over the last 100 years, that this increase is due to human effects on the climate, specifically increases in concentrations of greenhouse gases, and that the rate of increase has increased to about 1.8°C (3.2°F) per century over the last 25–30 years. This higher rate is expected to be sustained over the next century. Carbon dioxide concentrations increased from the preindustrial level of about 280 ppmv (parts per million by volume) to 358 ppmv by 1994, and by 2005 they were about 379 ppmv. Current carbon dioxide concentrations are higher than they have been at any time in at least the last 420,000 years. The last time the earth had CO_2 levels as high as they are today was likely 10–20 million years ago (7).

Sea levels have increased around the world by about 17 cm (6.7 in.) over the last 100 years. The rate of increase was about 1.8 mm per year between 1961 and 2003, increasing to about 3.1 mm per year from 1993 to 2003. IPCC is not sure whether this faster rate is due to natural variability, or to an increase in the long-term trend. The primary cause of sea level rise is the combination of (a) thermal expansion in response to increased ocean temperatures and (b) increased volume of water in the oceans due to melting of ice (7).

The fourth IPCC assessment says the most likely temperature scenario for the future is a warming of 2–4.5°C (3.6–8.1°F) this century, reflecting a continuing warming rate of about 0.2°C per decade. This rate of warming is unprecedented in at least the last 10,000 years. IPCC says it cannot rule out values substantially higher than 4.5°C, but feels an increase of less than 1.5°C is very unlikely (7). For sea level, the current projections are for increases of 0.18–0.59 m (7–23 inches) this century. These projections do not include the full effects of changes in the Greenland and Antarctic ice sheets—which could increase the estimates by 0.1–0.2 m, or perhaps even more. IPCC felt that these phenomena are not yet well enough understood to be incorporated in the predictions. Moreover, ocean levels will continue to increase long after 2100, even if greenhouse gas concentrations have stabilized, and may have reached only half their eventual total even by 500 years from now (7). Collapse of the West Antarctic ice sheet could raise sea levels by as much as 5 m. Only a few years ago, this was thought to be highly unlikely at least for several millennia, but some scientists now think it is not nearly so far-fetched. Melting of the ice sheet in Greenland is considered much more likely, and this alone could increase sea levels by as much as 7 m (8).

Use of fossil fuels for energy is the primary cause of increased carbon dioxide concentrations in the atmosphere.

Chlorine, Chlorinated Organics, and Plasticizers

In recent years, there has been increasing concern about the effects of chlorine, and in particular of chlorinated organic compounds, as well as other chemicals that can interfere with action of natural hormones or that have hormone-mimicking effects (endocrine disruptors and similar compounds).

Initial attention focused largely on dioxins. Considerable concern was expressed about incineration of polyvinyl chloride (PVC) because of fear that presence of PVC in incinerators would lead to increased dioxin production. Despite evidence that PVC is at most a minor factor in dioxin production in incinerators, with combustion and emission-control system conditions being much more significant, opponents of incineration often have raised this as a major issue. Concern has also been raised about possible hormonal disruption effects associated with a variety of other chlorinated organic compounds. PVC again is often targeted as a contributor to these problems. Organizations such as Greenpeace have even called for elimination of chlorine-based chemical production processes.

While attacks on chlorine have diminished somewhat, a current target is a variety of phthalate plasticizers. A recent U.S. study found high levels of plasticizers in a significant fraction of water samples (9). The Canadian government has listed plasticizers as one of the sources of endocrine disrupting substances (10). The Center for Bioenvironmental Research at Tulane and Xavier Universities is one of many other sources about such effects (11).

Concern about these chemicals was refueled in part by the publication of *Our Stolen Future* (12) in 1996. The organization by this name continues to provide updated information about endocrine disruption (13).

SOLID WASTE ISSUES

Much of the criticism of packaging in recent years has been related to its disposal. During the 1980s, a number of municipalities in the United States, particularly on the East Coast, began to encounter significant problems with lack of availability of disposal facilities for municipal solid waste (MSW). Packaging accounts for approximately one-third of the MSW stream by weight, a fraction that has been relatively constant for several decades, so it became a natural target for efforts to decrease the amount of MSW requiring disposal. At the same time, there was a change in the general philosophy about solid waste management techniques from heavy reliance on landfilling to use of a more complex mixture of options.

In the United States, this was expressed, by the EPA and others, as the philosophy of integrated solid waste management, incorporating the solid waste management hierarchy. This hierarchy placed waste reduction at the top, as the most desirable option, followed by recycling and composting, next incineration, and finally landfilling at the bottom. The goal was to manage waste materials as far up the hierarchy as was practical.

Waste reduction

Waste reduction, or source reduction, is an action that prevents generation of waste. Using less material in a package means that less will be disposed at the end of the package life. Furthermore, it results in savings in production, processing, and transportation of materials. Of course, this must be balanced against the function of the package. Elimination of packaging would mean the elimination of many of the products we enjoy, as well. Similarly, underpackaging can lead to significant product damage, thus increasing waste. The packaging industry has a long tradition of source reduction, accomplished for the most part with the goal of saving money by using less material for packages. Glass bottles, plastic bottles, metal cans, and many other package forms have become thinner and lighter over the years.

Reuse of packages is another form of waste reduction. While some types of reusable packaging, such as refillable beverage bottles, have decreased in use, in the distribution packaging segment, reuse has enjoyed some revival in the last decade or so. Some industries have switched from corrugated boxes to plastic or metal crates or bins. One-way wood pallets have been replaced by reusable plastic pallets in a number of applications. There have been efforts to combine source reduction and reuse by providing no-frills refill packages for consumer products such as laundry detergent, but with limited success.

The U.S. Environmental Protection Agency, in its series of reports on MSW, now also includes discussion and quantification (to the extent possible) of source reduction (14).

Recycling

Much of the attention related to reducing packaging waste going to disposal has focused on recycling, including both (a) designing packages for easier recyclability and (b) using recycled materials in manufacture of packages. There are significant differences between packaging materials in average recycling rates and in the potential for incorporation of recycled content.

Aluminum beverage cans used to boast the highest recycling rate for any packaging material, but their rate has fallen from its historic high of 65% in 1992, while the rates for other packaging materials have increased. In 2005, the recycling rate was only 44.8% (Figure 1) (14, 15). It should be noted that the Aluminum Association cites higher rates, but includes imported used beverage cans in calculating the rate (15), a practice that is not accepted by EPA.

A substantial portion of the aluminum beverage cans recycled come from the 11 states with deposit systems for carbonated beverage containers (and in some cases on other beverages; one of these states exempts aluminum cans from the deposit). The aluminum industry set up a network of buyback centers in many nondeposit states, but these have decreased in relative significance as collection of cans and other recyclables at curbside has increased. Aluminum cans remain one of the most valuable materials collected in such programs. New aluminum cans are an important end market for recycled aluminum. Using recycled aluminum is economically attractive due to the high cost of virgin raw materials (bauxite) and to the large energy savings associated with making aluminum sheet from recycled aluminum rather than from bauxite (95% energy savings).

The recycling rate for steel cans has actually exceeded the rate for aluminum cans for the last several years. The rate reached a historical high of 62.9% in 2005 (Figure 1) (14, 16). While steel cans are also commonly collected in curbside recycling programs, recovery of steel from garbage going to waste-to-energy incineration facilities is another important source. This is possible because of the magnetic nature of steel, which allows it to be fairly easily separated from the mixed waste, either prior to or after incineration. While steel cans generally contain about 25% recycled content, most collected cans are used in nonpackaging applications. Used cans are now recognized as a valuable source of high-quality steel scrap.

The recycling rate for glass containers is considerably lower than for aluminum and steel, about 25.3% in 2005 (not including refilling), and has been relatively stable for the last decade (14). In contrast to aluminum, raw materials for glassmaking are relatively low in cost. While energy savings do accrue from using recycled glass (cullet) in making new containers, they are significantly more modest than with aluminum. The energy required to process the cullet and transport it to the glass-making facility may consume a significant amount of this savings. An additional problem with glass recycling is the requirement for separation of the glass by color. While automated sorting equipment does exist, this is often still a hand-sorting operation and is restricted to unbroken containers. Facilities for sorting commingled recyclables (material recovery facilities, MRFs) typically lose a substantial fraction of their incoming glass stream to breakage. Container manufacturing is the major market for recycled glass and can accommodate very little color contamination. Uses for mixed-color cullet can be found in construction and related industries, where recycled glass can substitute for some of the aggregate in concrete and asphalt, for instance, but these are low-value uses that are often uneconomical. The major sources of collection of glass containers for recycling are deposit systems for beverage containers and curbside recycling programs. A significant number of curbside programs have stopped collecting green glass because of lack of markets, and some have stopped collecting glass containers all together, primarily because of contamination of paper with broken glass in single-stream collection systems.

Recycling of paper and paperboard packaging materials is heavily dependent on the particular form of packaging involved. Corrugated has the highest recycling rate of all packaging materials, 71.5% according to EPA (Figure 2) (14) and 76.6% according to the Paper Industry Association Council (PIAC) (17). Most of this material originates in the business sector, rather than from individual consumers. Retail stores, factories, and so on, can generally achieve savings in their waste disposal bills by participating in programs to source-separate corrugated boxes for recycling. In addition, some garbage collection operations divert selected loads of waste, known to contain a high percentage of corrugated, to sorting facilities where hand sorting is used to recover this material. An additional source of material is dropoff collection sites. Curbside collection of corrugated is less available, though it does appear to be growing. Major end-use markets for corrugated containers include manufacture of new corrugated, boxboard, and kraft paper for grocery sacks. While, in general, paper fibers are shortened and weakened by the processing required to repulp and clean the fibers, it is possible to make recycled grades of board with properties

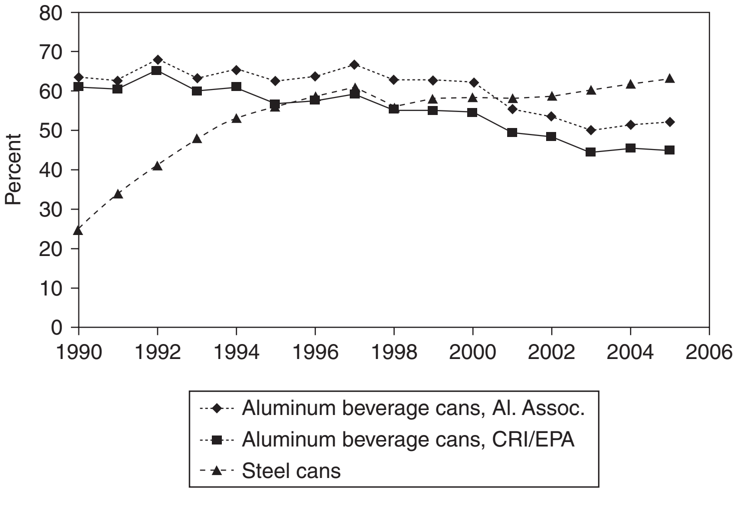

Figure 1. Aluminum beverage can and steel can recycling rates (14–16).

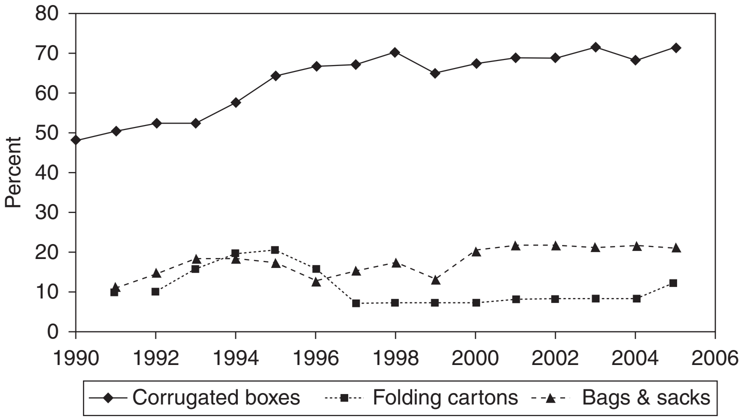

Figure 2. Corrugated, folding carton, and paper bag recycling rates (14).

near those of virgin materials, especially when the recycled content is blended with virgin fiber. Kraft bags and sacks had a recycling rate of about 21% in 2005, considerably lower than the rate for corrugated. Some of this is collected through drop-off sites or curbside collection, often along with corrugated or newspapers. Recycling of folding cartons was almost unheard of before 1990, but reached a rate of 11.9% in 2005. Efforts have been made to recycle milk cartons and aseptic "juice boxes," but they have not had much success, and recycling rates for these materials remain negligible. The overall recycling rate for paper and paperboard packaging was 58.8% in 2005 (14). In addition to domestic uses, export of recovered paper is significant.

Recycling of plastic packaging differs considerably by resin and container type. For a long time, the "star" of plastics recycling was polyethylene terephthalate (PET) soft drink bottles, which reached a recycling rate of 53.3% in 1994, according to EPA (Figure 3) (18). However, the recycling rate has fallen substantially since then, and in 2005 was only 34.1% (14). The 11 deposit states provide a major source of this material. As PET has spread into the "custom" bottle market, curbside collection has become increasingly important as a source of recyclable materials. The growing use of single-serve beverage bottles and, in particular, the rapid growth in bottled water have contributed to the declining PET bottle recycling rate. These bottles are often consumed away from home and, except in Maine and California, are not covered by deposits. The PET industry has worked on establishing convenient drop-off sites for bottles, especially at special events, but this has not been sufficient to reverse the decline. Other types of PET packages have a lower recycling rate than bottles. The overall PET container recycling rate in 2005 was 26.5%; the overall PET packaging recycling rate was 25.2% (14). The major use of recycled PET is fiber applications such as fiberfill, carpet, and clothing. Other major uses include containers, automotive parts, strapping, and other products (19). Recycled PET is acceptable for direct food contact in certain circumstances. First, some such applications, such as use in egg cartons or vegetable trays, provide limited potential for migration. Second, some applications use a layer of virgin plastic to provide a functional barrier between potential contaminants in recycled PET and the product. Third, some mechanical recycling processes have received letters of nonobjection from FDA after demonstrating their ability to remove potential contaminants. Finally, some systems use tertiary recycling processes (methanolysis or glycolysis) to chemically break down the polymer into monomers, purify them, and use them as feedstocks for production of PET that is identical to virgin resin.

Currently the most widely recycled plastic packaging material is natural high-density polyethylene (HDPE) bottles, such as those for milk and water, which were recycled at a rate of 28.8% in 2005 (Figure 3) (14). The major source of these bottles is curbside collection programs. The high-quality unpigmented homopolymer is suitable for a variety of uses, including applications in packaging, housewares, toys, pipe, and traffic cones. Significant packaging applications include motor-oil bottles (blended with virgin resin), household chemical bottles (as a buried inner layer), and bins and pallets. Some recycled HDPE is also used in film form, primarily for shopping bags. Recovery of pigmented HDPE bottles is somewhat lower than for unpigmented bottles, 26.0% in 2005 compared to 28.3% for unpigmented bottles, according to the American Chemistry Council (20), and its uses are more limited because of the complications caused by the mixtures of colors. Motor-oil bottles and agricultural pipe are two major markets. The demand for recycled HDPE, as for other recycled materials, tends to be strongly influenced by ups and downs in the supply and cost of virgin materials.

A significant amount of plastic film is recycled from two major sources, stretch wrap and bags. Pallet stretch wrap is widely collected for recycling, although precise recycling rates are not readily available. It is collected in the same way as most corrugated—through commercial sources. It used to be common for grocery and other retail stores to have drop-off bins for collection of plastic merchandise bags, but many such programs have disappeared, and recycling of bags has fallen. EPA reports a "bags and sacks" recycling rate of 3.2% in 1990, but only 0.6% for 2005 (14). Two major markets for recycled plastic film and bags are plastic lumber and trash bags. Other markets include housewares, agricultural film, and merchandise bags.

In the 1980s and early 1990s, the National Polystyrene Recycling Company engaged in an effort to recycle

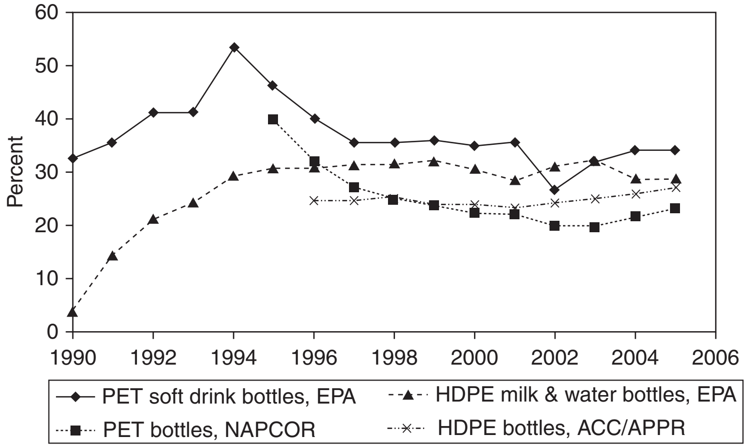

Figure 3. PET and HDPE bottle recycling rates (14, 19, 20).

expanded polystyrene from food-service applications. These efforts have largely disappeared. Most current polystyrene recycling is limited to foam cushioning materials, primarily (in the United States) through the efforts of the Alliance of Foam Packaging Recyclers (21).

Some recycling of polypropylene (PP) bottles takes place in communities with "all plastic bottles" collection programs. The "rule of thumb" is that about 5% of PP can be included in HDPE recycling without adversely affecting the performance of the recycled material. Of course, it must be noted that the caps and fitments that may be included on the collected HDPE bottles are usually PP and contribute to this total. Most specific recycling of PP packaging is caps on PET bottles. The density-based separation systems that are a routine part of PET recycling are quite good at separating PP and PET.

Little recycling of other plastic packaging materials is occurring in the United States. PVC is recycled to an appreciable extent in Europe, but not much in the United States Some recycling of comingled plastics occurs; the major products are substitutes for wood or concrete, often for outdoor use. However, such systems are rare and their economic success has been marginal at best.

As can be seen above, the most desirable way to collect materials for recycling is significantly influenced by the type of material to be collected and by where it is most available. For corrugated boxes and stretch wrap, collection efforts focus on the commercial sources that discard most of these materials. For beverage bottles, deposit legislation, originally passed primarily as a litter-prevention measure, has been proven to be a very effective method of collection, in terms of recovery rate. In Michigan, the only state with a 10-cent deposit on all covered containers, recovery rates are over 97% (22). For understandable reasons, retailers generally oppose expansion of deposit systems. Nevertheless, both Maine and California have expanded deposits to cover most beverage containers with the explicit goal of increasing recycling. Efforts are underway in other states to do the same. Curbside collection programs generally offer significantly higher diversion rates than drop-off collection, due to the greater convenience that they provide. The variety of materials accepted obviously influences the proportion of materials diverted from disposal. Other important variables are the amount of effort the consumer is expected to go to in preparing the materials, the logistics of the system (is a container or cart provided, is collection weekly or less often, etc.), is participation in recycling less or more expensive than simply putting the materials in the garbage (pay-as-you-throw plans), is recycling voluntary or mandatory, how much effort is devoted in a community to educating and motivating residents to participate, and so on.

Composting

Composting is the managed biodegradation of waste materials. It has grown substantially as a disposal option for yard waste, but is still very limited, in the United States, as an organized system for disposal of MSW. Obviously, only the biodegradable fraction of MSW can be handled by composting. In principle, this includes most paper and wood packaging, as well as those plastics that are truly biodegradable. In practice, some composting systems are limited to food and yard wastes, not accepting any packaging materials, and others accept packaging materials only if they are paper. Difficulties in getting compostable plastics accepted in such systems include the limited use of these materials, the difficulty in differentiating compostable from noncompostable plastics, and concern on the part of operators that the materials will cause problems in the proper functioning of their systems or adversely affect their markets.

Incineration

The next step down the solid waste management hierarchy is incineration. As practiced in the United States today, it is virtually always coupled with energy recovery, and therefore offers not only a reduction in the volume of solid waste requiring landfilling but also the generation of energy, which can displace some combustion, usually of coal. To avoid unacceptable air pollution, sophisticated and expensive pollution control equipment is required. The ash generated from the noncombustible residues combined with that from the air pollution control systems may contain levels of heavy metals high enough to require disposal as a hazardous waste. The recommended practice is to dispose of these materials in ash monofills. While in the mid-1980s EPA called for significantly increased use of incineration and it did grow substantially, it has remained relatively stagnant since the mid-1990s. Reasons include public opposition and high cost.

The growth in incineration was instrumental in the development of U.S. state legislation prohibiting the deliberate introduction of lead, cadmium, mercury, and hexavalent chromium into packaging materials (except in narrowly defined circumstances) and in limiting their inadvertent presence. These laws, based on model legislation promulgated by CONEG, the Coalition of Northeastern Governors, are commonly referred to as Toxics in Packaging legislation and as of 2007 had been passed in 19 states (23).

Landfill

Landfilling is at the bottom of the solid waste management hierarchy, seen as the least desirable option, but nonetheless one that is always necessary for residual materials that cannot be effectively handled by options higher in the hierarchy. The major drawbacks of landfilling are the space that it uses and its potential for groundwater contamination. On the positive side, landfills are often the least expensive option for handling many types of waste and can serve as a source of methane for use as a fuel.

OTHER ENVIRONMENTAL IMPACTS

In addition to the effects discussed above, packaging can be associated with a variety of other environmental impacts, such as destruction of natural habitats, loss of scenic beauty, and noise pollution. For the most part, packaging plays only a minor role in such impacts. For instance, use of paper, including packaging, is often cited as a prime factor in destruction of tropical rainforests. However, slash-and-burn agriculture is a much more significant factor. Little rainforest destruction can be attributed primarily to harvesting of wood for manufacture of wood or paper packaging.

LEGISLATION

No discussion of packaging and the environment would be complete without a mention of legislation, which has been, in many cases, the primary driving force behind the increased attention given to environmental impacts. The mid-1990s have brought a slowing in the pace of legislative demands for packaging changes, but they remain an important factor. In the United States, legislation at the state level remains more significant than federal legislation. In Europe, both EEU (European Economic Union) and individual country legislation are significant. Extended producer responsibility (EPR) is the guiding framework. In Canada, both Ontario and Quebec have fee systems for manufacturers based on the amount of packaging, to help support recycling programs. Extended product responsibility, also denoted EPR but sharing the responsibility among producers, consumers, and government, guides policy there. A variety of other efforts could be cited around the world.

Recently, plastic merchandise bags have been identified as a particular concern in many localities. Several countries or other political units have enacted use fees to increase the cost of such bags. Others have banned their use outright.

GREEN MARKETING

The environmental attributes of a package are increasingly being used as a marketing tool. In several cases, enforcement activities have been undertaken against companies making such claims without proper justification. It is extremely important for any business contemplating environmental claims on a package to ensure that the claims are in compliance with relevant guidelines and regulations in the countries or states in which they will be sold.

SUSTAINABILITY

Increasingly, the concept of *sustainability* is being seen as providing useful guidance for decision-making in packaging as well as in other areas. While sustainability has been defined in a number of ways, the basic idea is to operate in ways that meet current needs without adversely impacting the ability of future generations to meet their own needs (24).

Adverse environmental impacts associated with a product or process will generally negatively impact its sustainability. Therefore, life cycle analysis can be a useful tool in evaluating sustainability.

Another concept with a close connection to sustainability is the idea of cradle-to-cradle design. In this type of design, waste streams associated with production, use, or disposal of a product become feedstocks for production of either the same type of product or some other product. This idea was popularized by McDonough and Braungart in the book *Cradle to Cradle* (25). Minimizing waste of materials is one approach to enhancing sustainability.

The Sustainable Packaging Coalition is a leading proponent of the selection and use of packaging systems that are sustainable. SPC defines sustainable packaging as packaging that (26):

> Is beneficial, safe & healthy for individuals and communities throughout its life cycle
> Meets market criteria for performance and cost
> Is sourced, manufactured, transported, and recycled using renewable energy
> Maximizes the use of renewable or recycled source materials
> Is manufactured using clean production technologies and best practices
> Is made from materials healthy in all probable end-of-life scenarios
> Is physically designed to optimize materials and energy
> Is effectively recovered and utilized in biological and/or industrial cradle to cradle cycles

Evaluating the environmental impact or sustainability of packaging systems is often very complex. Specific results generally depend on what assumptions are made, where the boundaries of the system being evaluated are drawn, and on what value judgments are made. While this can lead to considerable controversy about specific comparisons (what package is “best”), this does not mean that there is no point in trying to do so. In many cases, opportunities can be identified to make changes that clearly reduce the environmental impact of packaging systems.

BIBLIOGRAPHY

1. UNEP and SETAC, Life Cycle Initiative, web information. Available at http://lcinitiative.unep.fr/. Accessed April 22, 2007.
2. Wal-Mart Scorecard, web information. Available at http://www.walmartfacts.com/articles/4564.aspx. Accessed April 22, 2007.
3. L. L. Gaines, *Energy and Materials Use in the Production and Recycling of Consumer-Goods Packaging*, ANL/CNSV-TM-58, U.S. Department of Commerce, National Technical Information Service, 1981.
4. Arthur D. Little, Inc., *The Life Cycle Energy Content of Containers: 1991 Update*, report to The American Iron and Steel Institute, The Steel Can Recycling Institute, Ref. 67276, Arthur D. Little, Inc., Cambridge, MA, 1991.
5. I. Boustead and G. F. Hancock, *Energy and Packaging*, Ellis Horwood, Chichester, UK, 1981.
6. NOAA, NASA, UNEP, WMO and EC, *Scientific Assessment of Ozone Depletion, 2006*, web information. Available at http://ozone.unep.org/Assessment_Panels/SAP/Scientific_Assessment_2006/index.shtml, 2006. Accessed April 22, 2007.
7. Intergovernmental Panel on Climate Change, *Climate Change 2007*, 4th Assessment Report 2007, web information. Available at http://www.ipcc.ch/. Accessed April 22, 2007.
8. J. M. Gregory, P. Huybrechts, and S. C. B. Raper, *Nature* **428**, 616 (2004).
9. U.S. Geological Survey, “Pharmaceuticals, Hormones, and Other Organic Wastewater Contaminants in U.S. Streams,” 2002, web information. Available at http://toxics.usgs.gov/pubs/FS-027-02/pdf/FS-027-02.pdf. Accessed April 22, 2007.
10. Environment Canada, *Endocrine Disrupting Substances in the Environment*, 1999 web information. Available at http://www.ec.gc.ca/eds/fact/eds_e.pdf. Accessed April 22, 2007.
11. Center for Bioenvironmental Research at Tulane/Xavier Universities, web information. Available at http://e.hormone.tulane.edu/aboutus.html. Accessed April 22, 2007.
12. T. Colborn, D. Dumanoski, and J. P. Meyers, Our Stolen Future: How We Are Threatening Our Fertility, Intelligence and Survival, Penguin Books, New York, 1996.
13. Our Stolen Future, web information. Available at http://www.ourstolenfuture.org/. Accessed April 22, 2007.
14. U.S. Environmental Protection Agency, *Municipal Solid Waste in the United States: 2005 Facts and Figures*, EPA530-R-06-011, Oct. 2006. (Available at http://www.epa.gov/garbage/pubs/mswchar05.pdf)
15. Container Recycling Institute, web information. Available at http://www.container-recycling.org/. Accessed April 22, 2007.
16. Steel Recycling Institute, “Steel Recycling Rates at a Glance,” web information. Available at http://www.recycle-steel.org/PDFs/2005Graphs.pdf. Accessed April 22, 2007.
17. Paper Industry Association Council, Recovery and Use of Old Corrugated Containers, web information. Available at http://stats.paperrecycles.org/index.php?graph=corrcont&x=36&y=12. Accessed April 22, 2007.
18. U.S. Environmental Protection Agency, *Characterization of Municipal Solid Waste in the United States, 1995 Update*, web information. Available at http://www.epa.gov/epaoswer/non-hw/muncpl/pubs/msw95.pdf. Accessed May 7, 2007.
19. NAPCOR, “2005 Report on Post Consumer PET Container Recycling Activity,” Sonoma, CA, 2006. (Available at http://www.napcor.com/pdf/2005_Report.pdf)
20. American Chemistry Council, “2005 National Post-Consumer Plastics Bottle Recycling Report,” Arlington, VA, 2006. (Available at http://www.plasticsresource.com/s_plasticsresource/docs/1900/1874.pdf)
21. Alliance of Foam Packaging Recyclers, web information. Available at http://www.epspackaging.org/index.html. Accessed April 22, 2007.
22. Michigan Dept. of Environmental Quality, “Michigan Bottle Deposit Law Frequently Asked Questions,” web information. Available at http://www.deq.state.mi.us/documents/deq-wmd-swp-mibottledepositlawFAQ1.pdf. Accessed May 7 2007.
23. Toxics in Packaging, web information. Available at http://www.toxicsinpackaging.org/. Accessed April 22, 2007.
24. Sustainable Future, web information. Available at http://www.sustainable-future.org/page.php?Page=home. Accessed April 7, 2007.
25. W. McDonough, and M. Braungart, *Cradle to Cradle: Remaking the Way We Make Things*, North Point Press, New York, 2002.
26. Sustainable Packaging Coalition, web information. Available at http://www.sustainablepackaging.org/. Accessed April 7, 2007.

ENVIRONMENTAL MANAGEMENT SYSTEM

JOE CASCIO
BOOZ ALLEN HAMILTON
Ex-Chair, US Technical
Advisory Group

PRINCIPLES OF ENVIRONMENTAL MANAGEMENT

The overarching purpose of an environmental management system (EMS) is to formalize environmental management and to instill the environmental ethic in organizations. This is done primarily through formal procedures, programs, and process management controls that are applied to the organization’s operations. To achieve these ends, over 150,000 organizations in countries around the world have implemented EMSs that are based on the ISO 14001 international standard. Provisions in the standard assist implementing organizations in structuring procedures, programs, and processes into formal systems. The standard is prescriptive only with regard to organizational actions and structural arrangements but contains no performance requirements and is only moderately reliant on broad principles of environmental care and behavior. The few “principles” that are invoked include those dealing with employee involvement, management visibility, process consistency, pollution prevention, continual improvement, and system integration. It is instructive to consider each one of these separately, if only in brief:

Employee Involvement

Organizational success in environmental performance often depends on employee involvement that can only be achieved through employee commitment. In fact, where environmental care is relegated exclusively to a specialized staff, employees are less likely to acquire the habits of thought and manner that raise the environmental performance of the organization. With this in mind, the authors of ISO 14001 shifted many of the responsibilities for environmental care from the environmental staff to the organization's employees. The standard prescribes that key requirements of the EMS be implemented at "each relevant function and level" of the organization. This places the primary mandate for action on the employees in those functions and levels. For example, the standard expects that employees know the environmental objectives and targets, the applicable legal requirements, the elements of environmental management programs, and the operational controls that apply, as well as the importance of conformance to the environmental policy, the significant environmental impacts of their work, and their specific roles and responsibilities. Under the traditional approach, awareness and responsibility for these items would have been allocated almost entirely to members of the environmental function.

Management Visibility

A successful EMS also requires management visibility and leadership to bring it into being and to ensure its success. The authors of the ISO 14001 standard reasoned that any attempt to change an organization's culture without strong leadership from the top would likely end in failure. Employees are not easily fooled when management is not genuinely interested. An EMS requires that top management articulate a vision for environmental protection and that it play an active role to ensure the effectiveness of the management system and its continual improvement over time.

Prevention of Pollution

The authors of the ISO 14001 standard recognized the challenge of getting organizations to think proactively about the environmental consequences of the new products or processes they design. If engineers and product developers can be made to think about this while they are designing the new product or process, then significant gains toward environmental protection may be realized. To that end, ISO 14001 promotes preemptive environmental design either to avoid the creation of pollutants or to enlist other techniques to avoid the improper treatment or disposal of wastes.

Continual Improvement

When implemented, an ISO 14001 EMS establishes a framework that relies on the continual improvement of the various components of the system. A tacit tenet of ISO 14001—strongly articulated for quality management in the ISO 9001 standard—calls for process consistency and reliability. These two attributes provide confidence to the organization that the desired outcome will be achieved consistently. Continual improvement complements these traits by working to ensure that processes do not stagnate—that is, ensure that they remain fresh, vigorous, and relevant and become ever better in their consistency and reliability. If they do not become better, they will surely become worse. Continual improvement expects that processes be kept under frequent review and updated by the organization so that they are less likely to become neglected and ineffective over time.

Integration

Finally, it is useful to view an EMS as a subsystem of the organization's total management system. The ISO 14001 standard has been written to be applied flexibly and compatibly, capable of being integrated within existing organizational systems. Organizations have in fact found it easy to integrate their ISO 14001 EMSs with their quality management subsystems and with other subsystems including those for occupational health and safety. In this view, the EMS is simply a component, a subsystem of an organization's full, overarching management system.

THE RELATIONSHIP BETWEEN ISO 14001 AND SUSTAINABLE DEVELOPMENT

The concept of sustainable development (SD) gained popularity in 1987 with the publication of a UN-sponsored report prepared by a group of eminent international environmental experts led by Madame Gro Harlam Brundtland of Norway. The main thesis of SD is that human enterprise today should not rob future generations of their heritage—either of the ecology or of natural resources.

The 1987 *Report* spawned a series of national and international studies, commissions, and conferences on SD, culminating in the 1992 Rio Conference on Environment and Development (UNCED). Despite all the attention and time lapse, many organizations today continue to search for pragmatic ways to implement the principles of SD. Arguably, the ISO 14000 series of standards for environmental management and analysis provide the very tools needed to effectively implement the concept of SD. Provisions in the various standards of the series can lead organizations to focus their environmental protection efforts in ways they may never have done before. Principal among these is the behavioral changes that can be made to instill the environmental ethic in the organization's employees. Inducing such cultural changes in organizations can produce more efficient, reliable, and consistent environmental protection from operations and from decisions

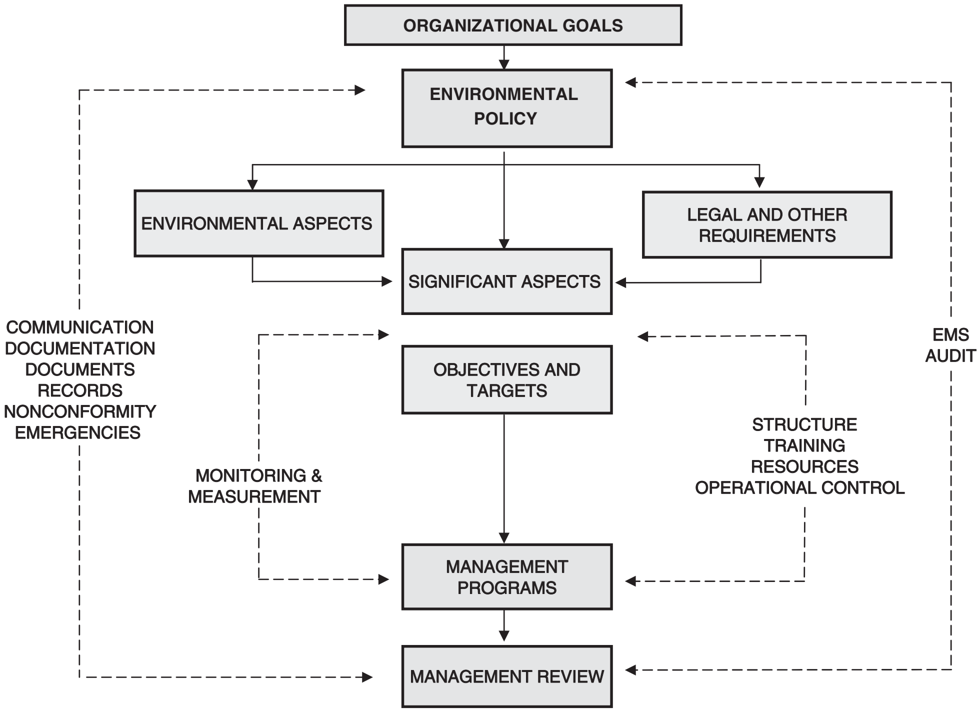

Figure 1. Interrelationship of ISO 14001 elements.

and actions on new products, processes, and investments. The ability to make these business decisions with a caring, environmentally sensitive attitude, understanding, and commitment is fundamental to the achievement of the SD goals.

THE ISO 14001 ELEMENTS

The ISO 14001 standard consists of a number of required elements that are interrelated to form a system. The elements and their gross interrelationships are shown in Figure 1. The paragraphs below provide a brief description of each of the relevant elements in the standard:

Organizational Goals

Every organization has its own goals that stem from the vision and aspirations of its founders and leaders. These may span the gamut from reaching specific financial goals to providing social services to ensuring the national defense. The possibilities, considering the vast number of existing organizations, are virtually unlimited. ISO 14001 takes the existence of the organization's fundamental goals as a fact, as a preexisting condition upon which the organization then expresses its desire and makes an additional management commitment to be an environmentally responsible organization. That commitment helps to give shape to the organization's environmental vision, which is then transformed into a public statement. The commitment must be expressed in a written, publicly available environmental policy if the organization wishes to obtain recognition for implementing an ISO 14001 conforming EMS.

Environmental Policy

The organization's Environmental Policy verbalizes management's commitment to run an environmentally responsible enterprise. The content of the environmental policy is meant to inspire—reflecting the commitment from top management and serving as a beacon to guide the behavior and actions of all members of the organization. These commitments also serve to set the objectives and targets for the EMS.

Environmental Aspects

The organization must identify its environmental aspects to begin the effort to build an EMS and to give substance to its commitment to be environmentally responsible. The common approach to environmental care, prior to EMS, was to review the environmental laws and regulations and then set controls in place to avoid excursions from requirements. The concept was to match legal requirements to the organization's activities and implement control programs to maintain compliance with the law. This based the entire focus of environmental protection on maintaining compliance, not on identifying potentially harmful activities, and gave rise to specialized organizational competencies strictly devoted to maintaining compliance. In contrast, an EMS works to place the emphasis on identifying the potentially harmful activities irrespective of legal and regulatory requirements. The environmental interactions of these activities are designated as environmental aspects in an EMS, and only after they are identified do we analyze the applicability of legal requirements. An EMS is structured to manage the organization's significant environmental aspects with the aim of preventing them from occurring and causing harmful environmental impacts.

Legal and Other Requirements

Having identified all of the organization's environmental aspects, we next need to select those that are most significant. The creators of ISO 14001 recognized that any organization might identify hundreds, perhaps thousands, of environmental aspects, but that only some of those might pose a significant threat to the environment. Among those that do pose such potential danger are those aspects that have regulatory requirements. Regulatory authorities have defined many substances, materials, and activities that present significant environmental hazards. It is prudent for the organization, therefore, to compare its list of environmental aspects against legal requirements to find those that have a match. The chances are that those that have regulatory requirements pose significant threats and should therefore be designated as significant environmental aspects.

Significant Environmental Aspects

Regulation is not the only criterion for designating significant environmental aspects; other factors may also be used to establish significance. These include the aspect's potential to cause environmental impacts, to pose health and safety risks, and to create business exposures. The point here, though, is to recognize that significance determines the design and scope of virtually every element of the EMS. An EMS focuses the organization primarily on managing those aspects that are significant; the remaining aspects are addressed through employee awareness, involvement, and commitment as the environmental ethic slowly takes hold throughout the organization. Among other ways, the EMS focuses on significant environmental aspects as follows:

- The organization must consider significant environmental aspects when setting its objectives and targets.
- Environmental management programs (EMPs) are designed to achieve the objectives and targets for significant environmental aspects.
- Employees whose work may create significant impacts must have received specific training and must be adjudged competent on the basis of appropriate education, training, and/or experience.
- The organization needs to consider external communication of its significant environmental aspects.
- The organization needs to put in place operational controls for operations and activities associated with significant environmental aspects.
- The organization needs to have procedures for the significant environmental aspects of goods and services it receives from external sources.
- The organization must have procedures for monitoring and measuring the key characteristics of its operations and activities that can have a significant impact on the environment.

Objectives and Targets

Objectives and targets should be set before drafting that portion of the policy that addresses the nature, scale, and impacts of the organization's activities, products, and services. This ensures that policy language is consistent with and reflects the organization's objectives and targets. Within the EMS, the objectives and targets determine the shape and content of the environmental management programs (EMPs).

Environmental Management Programs (EMPs)

While EMPs are primarily structured around the resources and timelines to achieve objectives and targets, they can also be used to consolidate other elements required in an EMS. Operational controls, for example, are needed to maintain control of operations and activities associated with significant environmental aspects. One can hardly expect to achieve objectives and targets if operations and activities are subject to being out of control. This is also important for regulatory compliance, since maintaining control is usually essential to staying in compliance. There are significant reasons, therefore, to incorporate operational controls within the EMPs. This same reasoning can be applied to other requirements of ISO 14001 such as training, roles, and responsibilities, as well as monitoring and measurement. All of these necessary elements of an EMS can be included in the full documentation of the EMPs.

Communication, Documentation, Document Control, Records Management, Nonconformity, and Corrective and Preventive Action

These elements of an EMS apply across the system and should be integrated with the organization's existing subsystems with similar functions. They act as lubricants in the EMS, to keep it working smoothly through information flow and self-corrective mechanisms. They should be designed to fit naturally with the culture and structure of the organization and its traditional approach to these areas. They are not dependent on the number or type of significant environmental aspects identified for the EMS. Nonetheless, they are important parts of the system. Document control, for example, ensures that only the latest authorized version of procedures are being followed by employees. The subsystem for records management ensures that generated records are maintained, safeguarded, and retained appropriately in the system. Communication ensures that information flows to the various functions and levels of the organization to enable the system to maintain its relevancy and functionality. Nonconformity, along with corrective and preventive action, provides the self-corrective mechanism that keeps the EMS working as it was intended to work.

EMS Audits

EMS audits test whether the system has been implemented and maintained as designed. Importantly, system audits are not compliance audits. The reason to look at compliance data during an EMS audit, for example, is not to test the organization's regulatory posture, but rather to test whether the programs (EMPs) that have been implemented are actually working as they were intended to work to achieve and maintain compliance. So, while EMS audits look at all elements of the system, they have a unique role in testing whether EMPs are actually achieving the ends for which they were designed—that is, whether they are effectively working to achieve the objectives and targets.

Management Review

ISO 14001 reserves a special role for top management, as well it should. Not only must they formulate and articulate the environmental commitments of the organization in the environmental policy, but periodically they must also render judgment on whether the EMS continues to be suitable, adequate, and effective.

Suitability addresses the issue of fit. Does the EMS fit the nature and character of this organization? An EMS that is designed for a municipal utility is not likely to be suitable for an oil refinery.

Adequacy addresses the issue of resources and commitment. Have proper and sufficient resources been allocated to ensure that the objectives and targets can be reached? Have all significant environmental aspects been identified and addressed to avoid environmental incidents?

Effectiveness relates to whether the system, as designed and implemented, can live up to the aspirations, goals, and commitments in the environmental policy. Here, it's not just a question of the right level of resources, but whether, as structured, the EMS can fulfill the policy commitments. In a very broad sense this is also a determination of whether the EMS has the capacity to bring the organization to its goal of becoming an environmentally responsible organization.

BIBLIOGRAPHY

ISO 14001:2004(E), *Environmental Management Systems—Requirements with Guidance for Use*, International Organization for Standardization, Geneva, 2004.

ISO 14004:2004(E), *Environmental Management Systems—General Guidelines on Principles, Systems and Supporting Techniques*, International Organization for Standardization, Geneva, 2004.

World Commission on Environment and Development, *Our Common Future*, 1987.

J. Cascio, G. Woodside, and P. Mitchell *ISO 14000 Guide, the New International Environmental Management Standards* McGraw-Hill, New York, 1996.

W. G. Wilson and D. R. Sasseville *Sustaining Environmental Management Success* John Wiley & Sons, New York, 1999.

P. A. Marcus and J. T. Willig, *Moving Ahead with ISO 14000* John Wiley & Sons, New York, 1997.

ENVIRONMENTAL REGULATIONS, INTERNATIONAL

Michele Raymond
Raymond Communications,
Inc., Riverdale, Maryland
Updated by staff

INTRODUCTION

The global community's interest in environmental sustainabilty has risen considerably since the second edition of the *Encyclopedia* was published. Many countries around the world have implemented environmental packaging requirements to allocate and distribute waste, to manage costs, and to to shift responsibility on the packaging manufacturer. The regulations differ greatly outside of the United States, but these regulations impact U.S. products. However, the U.S. must be aware of the global regulations in order to remain competitive. International fees and design requirements impact greatly on U.S. goods sold abroad.

Environmental concerns over resource use, pollution, and waste management, along with the idea that packaging businesses should share some of these concerns, have been the driving force behind packaging legislation. In many countries, the polluter pays principle and the Extended Producer Responsibility (EPR) are at the core of these regulations. The EPR has grown in popularity especially in Central and Eastern Europe. Asia is also involved in regulatory activity and has achieved complex packaging design requirements. Packaging engineers will need to keep control over the design of their products and be aware of fee requirements worldwide. This article gives only a brief description of where focus must be placed for any producer of packaging materials doing business outside of the United States.

FEES

Traditionally, packaging waste has been managed through government-backed disposal and recycling, The cost of waste management is not reflected in the price of the product. Charging companies a fee on the packaging they put out in the marketplace ensures that they share some of the economic burden.

Fee programs around the world are all quite different. Each country has a unique method for allocating recovery costs by setting fees and defining categories. Most countries place responsibility for ensuring packaging collection and recycling on the packer/filler or importer. Industry associations have established collective systems to manage compliance of the companies involved. Usually, costs are distributed among the members. In some countries, the government continues to provide collection and recycling services and charges a tax to industry based on the quantities of packaging material involved. Fees must be paid by the importer of goods. Fees are determined by the packaging weight and the type of material used.

Individual market types have a major impact on packaging fees. Other countries have broader requirements. Material definitions are not uniform and depend on the specific materials involved. If a product is made up of various materials, the component would fall into several categories. For example, a paper (70%) and aluminum (30%) product would fall into two material categories. In France, Japan, Taiwan, Sweden, and the United Kingdom, this example would be considered paper and the paper fee would apply. In Austria, Germany, and South Korea, the product would be considered a composite. This would represent a higher fee than the paper category. Belgium and Luxembourg do not have a designated category, and the product would go to the "other" category. What designates a packaging material that requires fees is also different for many countries. Some programs cover all packaging (sales, consolidation, and transport packaging) whereas others focus only on sales packaging. Austria, Belgium, the Czech Republic, Greece, Ireland, Italy, and Hungary, for example, have fees for all types of packaging including transport packaging. Variations in the fee schedules make it hard to analyze cost. The general trend is as follows: If a material is more difficult to recycle, then the fee is higher. An example of a fee schedule from Germany in 2004 was $0.19 for paper, $1.37 for plastic, and $0.98 for a composite (1).

EUROPE

European lawmakers have a different approach to ensure recycling than those in the United States. Unlike U.S. legislatures that have created hundreds of laws to encourage companies to use recycled material, those in Europe apparently believe that it makes more sense to force manufacturers to take more of a direct responsibility for packaging waste.

The assumptions are that the less environmentally sound containers will cost more to manage, consumers will choose the better materials, and manufacturers will supposedly use the materials in their new products.

The European Directive

The European Directive on Packaging was first passed in 1994 and amended in 2004. It contains some of the most comprehensive requirements focused on reducing packaging waste. All companies who sell products in the European Union (EU) must comply with the following: (a) *Source reduction*: Companies must demonstrate that they have reducd their packaging as much as possible and then identify the critical area that prevents further reduction in weight or volume of the packaging component. (b) *Recovery standards*: Packaging components must be recoverable by at least three recovery routes (energy, organic, or material recovery). (c) *Reuse*: Optional but must meet the requirements of the reuse standard if it is claimed as reusable. (d) *Heavy metal content*: Sets a concentration limit for lead, cadmium, mercury, and hexavalent chromium. (e) *Hazardous substances reduction*: Noxious substances must be minimized if they could be released in emissions, ash, or leachate when the packaging is landfilled or burned.

All packaging placed on the EU market must be in compliance with ERP or may be removed from the market. U.S. companies must incorporate the ERPs into their packaging design, and they must document how each standard of the Directive considered.

One of the problems with the Directive is that each country can set up its own "economic instruments" (i.e., taxes, deposits, industry collection fees, or a combination), and each country can stress different types of packaging from different sources. However, the European Parliamnent has adopted binding targets for the recycling of waste for its 27 member countries. The plan should be formed by 2014 for full use by 2020. Countries that fail to comply will be faced with full legal action (2)

All Packaging Affected

The Directive applies to all packaging. There are no specific exemptions for institutional, commercial, or other packaging that may be difficult to recycle. Every company supplying companies within the EU with raw materials for packaging, finished packaging, packaging components, or packaged goods are affected by the Directive, as will distributors of packaged goods and companies engaged in the collection, sorting, recovery, or disposal of packaging waste.

The Directive also covers disposable cups, plates, and cutlery used in the food service sector, but does not include the large road, rail, ship, and air containers. In principle, the Directive covers all packaging placed on the market within the EU and all packaging waste, whether disposed of at industrial or commercial sites or in private homes.

The Directive is binding on national governments, not on individual companies. Companies will simply be responsible for complying with whatever legal requirements are laid down at the national level.

National governments must ensure that systems are set up for the return or collection of used packaging, to ensure that it is effectively reused or recovered. For packaging that ends up in the home, recovery organizations are already in full operation in Germany and Austria.

The legal basis for these operations varies: They can be "Take back," which obliges a company to take back directly or contract with third party; "Give back," where companies are legally obliged to ensure that the used packaging material in their possession is either "valorized" (which means either recycled, composted, or sent for incineration with energy recovery) or passed to an organization that will take responsibility for valorizing it; or "Join up," companies are legally obliged to join (and pay a fee) to an approved recovery organization, which is responsible for meeting mandated targets.

Member states must ensure that packaging complies with certain essential requirements. These include minimization of packaging weight and volume to the amount needed for safety, hygiene, and consumer acceptance of the packed product; minimization of noxious or hazardous constituents; and suitability for reuse, material recycling, energy recovery, or composting.

The Directive contains certain "optional extras." Member states *may* (but do not have to) encourage environmentally sound reuse systems, provided that these conform with the EU Treaty; and where appropriate, member states are to encourage the use of materials recovered from recycled packaging waste in the production of new packaging and other products.

The EU member states have been considering applying reduced VAT rates on environmentally friendly producers. EUROPEN is the voice of industry for packaging and the environment in Europe. EUROPEN believes that any attempt to favor some types of packaging over others would be disproportionate to any real environmental difference and would distort competition (3).

Germany

Germany enacted the world's most stringent and well-known packaging ordinance in 1991. It forced a direct take-back obligation on the entire packaging chain (manufacturers and distributors, including wholesalers and distributors).

Quantified targets only apply to sales packaging within the DSD system. Manufacturers and distributors taking part in a "Dual System" which collects, sorts, and passes on used sales packaging for recycling are exempted from the general take-back requirement, provided that the Dual System meets the targets laid down. The DSD does *not* cover transport packaging or industrial packaging, where the absolute take-back requirement applies.

DSD is a monopoly, so there are no competitive pressures to keep costs down.

Pioneer disadvantage is that Germany was unable to learn from experience elsewhere.

The Green Dot symbol (Figure 1) is the license symbol of a network of industry-funded system for recycling the packaging material of consumer goods. The Green Dot means that a company has paid its DSD license fees and has become well known in Europe. The Green Dot signifies that a manufacturer contributes to the cost of recovery and recycling. If a company does not join the Green Dot scheme, they must collect recyclable materials themselves, and this sometimes is almost impossible for mass products. Thirty-two countries use the scheme. Companies are not required to use the dot on their products except for companies in France, Turkey, Spain, Portugal, and Bulgaria which must use the logo.

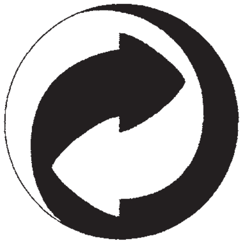

Figure 1. Germany's "Green Dot." It is not to be confused with a recycling logo.

The confusing issue for exporters is that use of the symbol on signifies payment of appropriate fees in *each country* where required. There is no pan-European program. Most European countries have transposed the Packaging and Waste Directive into national law. It is important for an exporter to join for each country to ensure compliance. Using the symbol without payment of fees can bring lawsuits for fraud.

Many countries will move in the direction of shared responsibility rather than full manufacturers responsibility as in Germany.

Refillables

Refillable containers are popular for beer and other beverages in some European countries. Germany has a refillables "quota" that has been challenged by the EU on trade grounds. Portugal recently enacted a refillables quota in its packaging law. Critics charge that these quotas are designed to protect the market share of local beverage makers, not protect the environment. Meanwhile, the patchwork of deposits, voluntary and mandatory, are pushing soft drink makers to use refillable plastic bottles.

PACIFIC RIM/EAST ASIA

Japan

Japan's Environmental Agency is now the Ministery of the Environment. Japan has a Fundamental Law for Establishing a Sound Material Cycle, meant to reduce waste, recycle waste, and appropriate disposal for the final use. The Ministry of International Trade and Industry has spent millions on research for plastics-to-fuel technologies, and it is pushing Japanese governments to purchase items with recycled content.

Hong Kong, Singapore, and Korea

All have active recycling systems, though they do not yet have direct "take-backs" for packaging. Malaysia is considering the idea, because its government has consulted with Germany's Minister of the Environment.

China

China has placed greater concern on environmental issues early in the 21st century. Problems are significant and involve soil, water, and air pollution. China's laws are among the strictest in the world, but enforcing them has been difficult. There is an eco-labeling law that apparently restricts companies from making green claims without government sanction.

As of June 1, 2008, all supermarkets and stores cannot give out plastic bags. Stores must clearly mark the price of plastic bags and are banned from tacking the price onto products. Ultrathin (less than 0.025 mm) bags are also banned (4).

Australia

Australia maintains one of the strictest regimes of environmental regulation. The only non-European nation to outrank it is New Zealand. The New South Wales government administers environmental protection legislation covering all facets of concern including waste disposal, and avoidance, resource recovery, recycling, and waste. Environmental regulations cover houshold, industry and government agencies (5).

New Zealand

New Zealand payback accord is made up of manufacturers and suppliers who use packaging, recyclers, and service providers. In 2003, the New Zealand Sustainability initiative set 2008 reycling targets. Rates are paper, 70%; aluminum, 65%; glass, 55%; plastics, 23%; and steel, 13% (6).

DESIGN

Material Restriction

South Korea currently bans packaging that is press-packed, coated, or shrink-wrapped in PVC. Several countries are expected to charge more for PVC packaging. Expanded polystyrene is forbidden in South Korea for packaging toys and composite materials. Phase-outs apply to packaging of electrical, office, and audio–visual products. An increasing number of countries (Denmark, Sweden, Norway, and Japan) have restrictions on the use of phthalates used in food packaging and toys. Many retailers, especially in Asia and Europe, refuse to accept packaging made of PVC. France and Denmark provide a fee reduction of certain materials that contain more than 50% recycled material.

Packaging Reduction

Several countries have implemented restrictions of empty space and the permissible number of layers in a packaging product. South Korea has a limit of no more that 10–35% empty space or 25–40% for a set product (a gift containing several packaged products). Austalia has limits that range from 25% to 40%. There is a 40% limit in Japan for cosmetic products. New Zealand has regulations that forbid deceptive packaging. Many countries, such as Australia, Belgium, the Netherlands, Greece, Slovakia, Spain, and South Korea, require companies to submit a detailed packaging reduction plam. The EU may make packaging reduction part of its reporting requirement. Reduction plans vary. Belgium, Greece, and the Netherlands require a company to develop a plan only if the goods are manufactured in that country. Spain and Slovakia require a plan if the quantity of packaging placed in the market exceeds a certain tonnage.

ECO-LABELING

An eco-label is a label that identifies overall environmental preference of a product (i.e., goods or services) within a product category based on life-cycle considerations, is in contrast to a self-styled symbol or claim statement developed by a manufacturer or service provider. An eco-label is awarded by an impartial third party that meets established environmental leadership. The Global Eco-labeling Network is a nonprofit association of third-party environmental performance labeling organizations founded in 1994 to improve, promote, and develop eco-labeling (7).

Programs

The United States Environmental Protection Agency researches international eco-labeling programs in order to identify common themes and connections with the International Community. Eco-labeling is voluntary, but the European Union has implemented eco-labeling regulation legislation. The EPA has identified 22 different eco-labling programs worldwide. Five of the most developed programs that have completed some form of evaluation are listed below.

The EU Flower. The EU flower was introduced in 1992 (see Figure 2). It is run by by the European Commission and is adminstered by Competent Bodies, which are representative organizations chosen within the EU member states. The flower logo is intended to promote design, product, marketing, and the use of products that have a reduced environmental impact during their life cycle. Packaging awards have gone to rubbish bags and converted paper products. The implementation of the EU's eco-labeling critria has been slow and has met with resistance from manufacturers and distributors (8).

Germany's Blue Angel. This program was implemented in 1977, making Germany the first country to implement a national eco-labeling program. The entire program is administered and financially managed by the German Institute for Quality Assurance and Certification (a private institution). It is considered more successful than the EU flower program. Packaging awards have gone to return bottles, recycled plastic and paper, and crates for food.

The Nordic Swan. The Nordic Swan was introduced in 1989 as a voluntary seal of approval (Figure 3). Currently, Norway, Sweden, Finland, Iceland, and Denmark participate. The Nordic Council of Minsters oversees the program. A listing for packaging guidelines has been approved.

Figure 2. European Union's ecolabel symbol.

Figure 3. The Nordic Swan.

Japan's Eco Mark. This is the second oldest eco-labeling program after the Blue Angel. It was introduced in 1989 as a seal of approval program to promote environmentally friendly products. It is implemented by the Japan Environment Association, a nongovernmental organization that acts under the guidance of the Environment Agency. Awards have been made for refillable containers, packaging material from recycled pulp, and recycled paper for packaging.

Taiwan's Green Mark. This program was launched in 1992 by Taiwan's Environmental Protection Administration and is administered by the Environment and Development Foundation, a private institution.

The United Nations Environment Program. This U.N. program reviews eco-lableling as an environmental policy tool and potential trade barrier.

Standards

The ISO standards for eco-labeling were set by dozens of countries working throughout the 1990s to develop standards for sustainable environmental management. ISO 14020 lists a set of principles by a practioner of environmental labeling. ISO 14024 specifies the procedures and principles that third-party certifiers must follow. ISO 14020 guiding principles for eco-labeling include: accuracy; avoiding unnessary trade barriers; scientific basis; provision of information on methodology; life-cycle approach; allowance of innovation; minimal adminstrative burden; open, consentual process; and provision of information on products.

BIBLIOGRAPHY

M. Raymond, "Environmental Regulations, International" in A. J. Brody and K. S. Marsh, eds., *The Wiley Encyclopedia of Packaging*, 2nd edition, John Wiley & Sons, New York, 1997, pp. 348–351.

Cited Publications

1. D. Allaway, *International Packaging Regulations*, State of Oregon Department of Environmental Quality, Portland, OR, www.deq.state,or.us.
2. "New Recycling Targets in Europe," www.euobserver.com, June 19, 2008.
3. "European Commission Consultation Review of Existing Legislation of Reduced VAT Rates," EUROPEN, Brussels, Belgium, www.europen.com, accessed July 2008.
4. "China Bans Free Plastic Bags," AP Press International, *Herald Tribune*, January 9, 2008.
5. "Environmental Regulations," www.business/nsw.gov.au, accessed July 2008.
6. "New Zealand Packaging Accord," www.newzealand.govt.nz. April 2008.
7. *International Eco-labeling Programs*, United States Environmental Protection Agency, March 2008, http://www.epa.gov.
8. *The Eco-labeling Regulation of 1992*, Forward Communications, June 22, 2008, http://forewardcommunications.wordpress.com.

ESTIMATION OF SHELF LIVES OF OXYGEN SENSITIVE PACKAGED PRODUCTS

Kit L. Yam
Department of Food Science,
Rutgers University, New
Brunswick, New Jersey

This article introduces a simple model equation (Equation (3), described later) and its application to estimate the shelf lives of oxygen sensitive foods in packages. A similar form of this equation also may be used for moisture sensitive products. The equation is useful to design packages for protecting products that are sensitive to the oxygen and moisture in air.

The accuracy of the estimations depends on whether the situation being considered satisfies the assumptions of the equation. The equation assumes the following: (1) the shelf life of a product is controlled by the oxygen permeation through the package, (2) the maximum allowable oxygen of the product may be defined and is known, (3) the package is made of a plastic material with uniform thickness, (4) the package has complete integrity (no leaks), and hence permeation is the only means of oxygen transfer, and (5) the oxygen concentration driving force (i.e., $P_e - P_i$ in Equation (3)) is constant. Because these assumptions are not always satisfied, experimental shelf life studies are usually recommended to validate the estimations of the equation.

Assumption (1) may be further explained using Figure 1, which shows that oxygen from outside the package can cause deterioration in the product by a series of steps as follows: (a) permeation through the package wall into the package headspace, (b) diffusion through the headspace to the food product surface, and (c) reaction with the food product until the extent of deterioration is no longer acceptable. The shelf life of the product is, thus, equal to the total time required for these steps to complete. In most situations, the diffusion step may be ignored, because the package headspace is usually small and diffusion of oxygen occurs quite quickly in the headspace. Therefore, the assumption that the shelf life is controlled by the permeation step is valid only in situation in which the

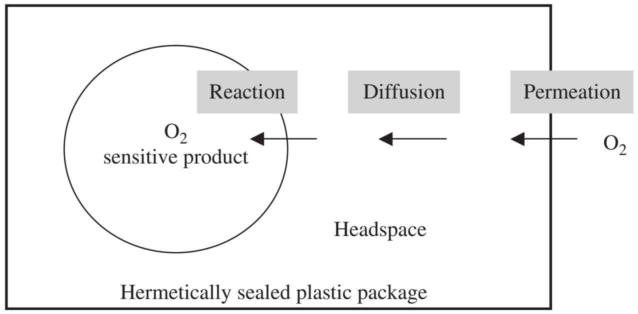

Figure 1. Permeation through package and reaction with product.

time required for reaction step is small or negligible. In practice, this assumption is satisfied if the package has good oxygen barrier; for poor oxygen barrier packages, the equation is not applicable because the reaction step controls shelf life.

In Assumption (2), the maximum allowable oxygen is the maximum amount of oxygen that a product can tolerate before becoming unacceptable. Table 1 shows the maximum oxygen and water tolerant limits for some food products, which can be converted into the maximum allowable values by multiplying the product weights. Note that these limits may serve only as general references, because experiments usually are required to obtain more accurate values.

Equation (3) has the advantage that it is simple and can provide useful estimations, although more sophisticated equations are available for situations in which higher accuracy is required (1).

MODEL EQUATION

The oxygen transmission rate (OTR) through a permeable package (e.g., a plastic pouch) may be calculated using the equation

$$\mathrm{OTR} = \frac{\overline{\mathrm{P}}\mathrm{A}}{\mathrm{L}}(\mathrm{P_e} - \mathrm{P_i}) \qquad (1)$$

Table 1. Maximum tolerant limits for some food products

Food	Maximum H_2O (%)	Maximum O_2 (ppm)
Beer, wine	3, loss	1–5
UHT milk	3, loss	1–8
Soups, sauces	3, loss	1–5
Fruits juices, soft drinks	3, loss	10–40
Preserves, jams, pickles	3, loss	50–200
Dried foods	1, gain	5–15
Snack foods, nuts	5, gain	5–15
Instant coffee, tea	1, gain	15–50
Oils and fats, dressings	10, gain	50–200

where

OTR = oxygen transmission rate, cc O_2/day
A = surface area of package, in^2
L = thickness of package, mil
$\overline{\mathrm{P}}$ = oxygen permeability, $(\mathrm{cc\ O_2 \cdot mil})/(100\ \mathrm{in}^2 \cdot \mathrm{day} \cdot \mathrm{atm})$
$\mathrm{P_e}$ = oxygen partial pressure in external environment, atm
$\mathrm{P_i}$ = oxygen partial pressure in headspace, atm

If the assumptions stated earlier are satisfied, the shelf life ($\mathrm{t_s}$) can be estimated as

$$\mathrm{t_s} = \frac{\mathrm{O_{2,\,max}}}{\mathrm{OTR}} \qquad (2)$$

where

$\mathrm{t_s}$ = shelf life, day
$\mathrm{O_{2,max}}$ = maximum allowable oxygen, cc O_2

As a reminder, Equation (2) assumes that the O_2 permeation through the package is the controlling factor of shelf life. Substituting Equation (1) into Equation (2) yields

$$\mathrm{t_s} = \frac{\mathrm{O_{2,\,max}L}}{\overline{\mathrm{P}}\mathrm{A}(\mathrm{P_e} - \mathrm{P_i})} \qquad (3)$$

This equation is useful for evaluating many what-if scenarios, as illustrated in the following two examples.

APPLICATIONS OF MODEL EQUATION

Example 1. Assume an oxygen sensitive package food has a shelf life of 12 months. If the package thickness is decreased by 20% and the surface area is decreased by 30%, what is the new shelf life?

Equation (3) may be use to obtain

$$\frac{\mathrm{t_{s2}}}{\mathrm{t_{s1}}} = \left[\frac{\mathrm{O_{2,\,max}L_2}}{\mathrm{PA_2}}\right] \Big/ \left[\frac{\mathrm{O_{2,\,max}L_1}}{\overline{\mathrm{P}}\mathrm{A_1}}\right] = \frac{\mathrm{L_2A_1}}{\mathrm{L_1A_2}}$$

The subscripts 1 and 2 denote the changes before and after, respectively. Since $\mathrm{t_{s1}} = 12$ months, $\mathrm{L_2} = 0.8\ \mathrm{L_1}$ and $\mathrm{A_2} = 0.7\ \mathrm{A_1}$, the new shelf life is estimated to be

$$\mathrm{t_{s2}} = 12\frac{(0.8\mathrm{L_1})\mathrm{A_1}}{\mathrm{L_1}(0.7\mathrm{A_1})} = 12\left(\frac{0.8}{0.7}\right) = 13.7\,\mathrm{months}$$

Example 2. A 100 g oxygen sensitive food is vacuumed packed into a multi-layer plastic pouch, which has a thickness of 10 mil, a surface area of 80 in^2, and oxygen permeability of 0.12 (cc mil)/(100 in^2 day atm). What is the estimated shelf life if the oxygen tolerant limit of the product is 5 ppm?

Multiplying the tolerant limit and product weight to obtain

$$\text{Maximum allowable } O_2 = (5 \times 10^{-6})\,(100) = 5 \times 10^{-4}\,\text{g},$$

which is the amount of O_2 allowed to enter into the package before the product becomes unacceptable. Because the molecular weight of $O_2 = 32$ and 1 g mole of $O_2 = 22400$ cc, the unit of maximum allowable value may be converted from weight to volume

$$\begin{aligned}\text{Maximum allowable } O_2 &= (5 \times 10^{-4})\,(22400)/32\\ &= 0.35\,\text{cc}\end{aligned}$$

P_i may be assumed to be zero since the product is vacuum packed. P_e may be assumed to be 0.21 atm, the normal partial pressure of O_2 in air. Therefore, the shelf life may be estimated by Equation (3) as

$$\begin{aligned}t_s &= \frac{O_{2,\max}L}{\overline{P}A(P_e - P_i)} = \frac{(0.35)(10)}{(0.12/100)(80)(0.21-0)}\\ &= 174\ \text{days}.\end{aligned}$$

REFERENCES

1. D.S. Lee, K.L. Yam, and L. Piergiovanni, Food Packaging Science and Technology, CRC Press, Boca Raton, 2008, pp. 85–86.

ETHYLENE–VINYL ALCOHOL COPOLYMERS

Ronald H. Foster
EVAL Americas, Houston,
Texas

Ethylene–vinyl alcohol copolymers are hydrolyzed copolymers of ethylene and vinyl alcohol. The polymer poly(vinyl alcohol) has exceptionally high barrier properties to various gases, solvents, and chemicals, but it is water-soluble and difficult to process. By copolymerizing vinyl alcohol with ethylene, the high barrier properties are retained and improvements are achieved in moisture resistance (EVOH is not water-soluble) and processability.

The resulting EVOH copolymer has the following molecular structure:

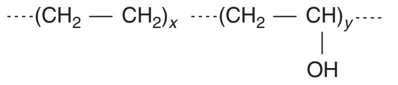

$$\cdots(CH_2 - CH_2)_x \cdots(CH_2 - \underset{\displaystyle OH}{\underset{|}{CH}})_y\cdots$$

Ethylene unit Vinyl alcohol unit

There are currently two global suppliers of EVOH copolymers. Kuraray Company Ltd. (EVAL™ resins) and Nippon Gohsei (Soarnol resins) are both Japanese companies with manufacturing facilities in Japan, Europe, and the United States. Chang Chun Group of Taipei, Taiwan has recently announced the startup of an EVOH production facility in Taiwan and is reportedly in the process of providing initial product samples to the market. Manufacturing capacity for EVOH resins worldwide is approximately 220 million lb annually. Table 1 lists the range of EVOH resins available.

Table 1. Range of EVOH Resins

Property	Range
Melt index (g/10 min)	0.7–20
Density (g/mL)	1.12–1.22
Ethylene content (mol%)	24–48
Melting point (°C)	156–196

EVOH copolymer resins first became commercially available in 1972 in Japan. However, widespread use of these resins did not occur until 1983 when U.S. food producers started using the resin for all-plastic, squeezable bottles.

The primary use of these resins is still food packaging, where the excellent gas-barrier properties are utilized to prevent oxygen degradation of food products. This has ultimately led to the replacement of many metal and glass food packages with the benefit of reduced weight and improved ease of use. In addition, usage has broadened due to EVOH's superior resistance to solvents, chemicals, and hydrocarbons, expanding into nonpackaging industrial applications such as the agricultural chemical, automotive, appliance, and protective-clothing areas.

EVOH copolymers are highly crystalline in nature, and their properties are dependent on the relative concentration of the comonomers. Figure 1 shows the relationship between comonomer concentration and moisture and gas transmission barrier properties, and Figure 2 shows the relationship between relative humidity and oxygen transmission rate.

It is this combination of exceptional barrier properties that permit the use of thin layers of these materials in multilayer packaging and nonpackaging structures.

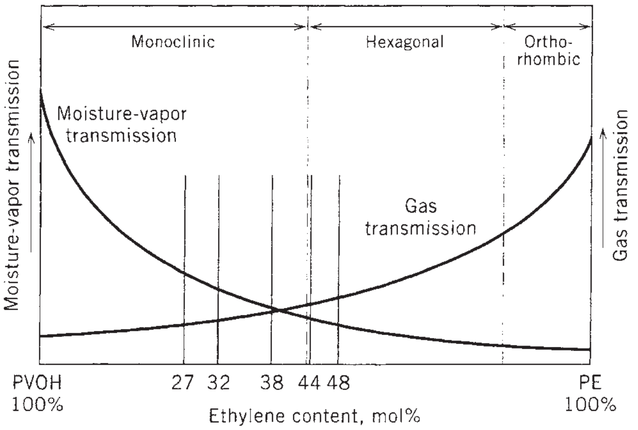

Figure 1. Comonomer concentration vs barrier properties.

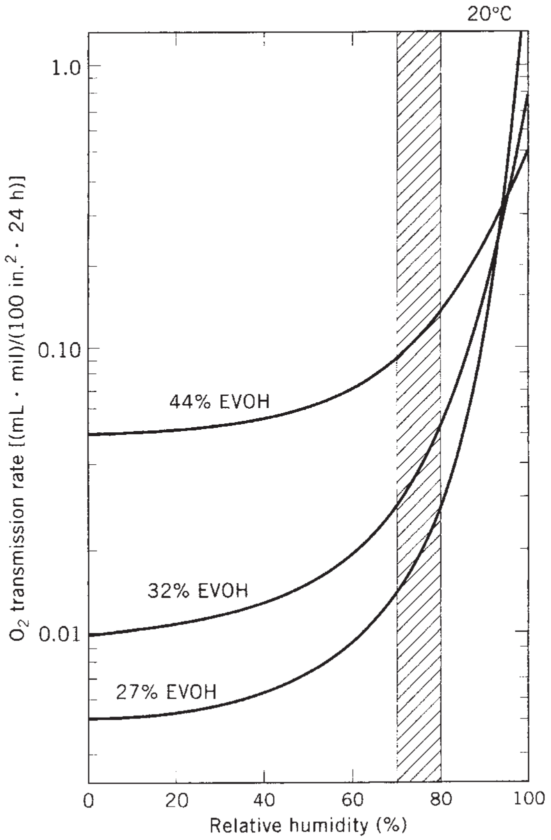

Figure 2. Oxygen transmission rate versus relative humidity.

EVOH COPOLYMER PROPERTIES

The general characteristics of EVOH copolymer resins are discussed in the following paragraphs.

Gas-Barrier Properties

EVOH resins are best known for their outstanding barrier to the permeation of gases such as oxygen, carbon dioxide, nitrogen, and helium. The use of EVOH copolymers in a packaging structure enhances flavor and quality retention by preventing oxygen from penetrating the package. For packages utilizing modified-atmosphere packaging (MAP) technology, EVOH resins effectively retain the carbon dioxide, oxygen, or nitrogen used to enhance the product. (See also Barrier polymers.)

Table 2 compares the gas transmission properties of EVOH copolymers with other commonly used packaging materials.

Hydrocarbon and Solvent Resistance

EVOH resins have a very high resistance to hydrocarbons and organic solvents. The weight-percent (wt%) increase in EVOH resins after immersion for 1 year at 20°C in various solvents is 0% for solvents such as cyclohexane, xylene, petroleum ether, benzene, and acetone; 2.3% for ethanol; and 12.2% for methanol.

Table 3 shows the performance of protective gloves containing an EVOH layer, and Table 4 reflects the resistance of EVOH to various fuels. These properties make EVOH resins an excellent choice for the packaging of oily foods, edible oils, agriculture pesticides, organic solvents, and other industrial applications.

Flavor, Fragrance, and Odor Protection

Protecting food products has become increasingly important, especially with the current trend away from product additives and the move toward smaller portion-size packaging. Protection can mean different things in different situations. One of the areas receiving increased attention in food packaging is the flavor–aroma barrier (see Aroma Barrier Testing).

The food industry is becoming increasingly aware of the importance of flavor barriers in containing natural flavors and preventing extraneous flavors from contaminating the product. Some food products are notorious for their ability to absorb extraneous flavor or aromas. Another important flavor consideration is commonly called "flavor scalping," in which some plastics, such as polyolefins, selectively absorb certain flavor constituents from the product.

EVOH resins provide excellent protection to the migration of flavors and the absorption of D-limonine, which is the primary flavor constituent in citrus juices, as can be seen in Table 5 and Figure 3.

Where food products are concerned, aroma barrier is somewhat analogous to flavor barrier. Food products must be protected from outside aromas in the distribution chain, grocery store, and home. Other food and nonfood products such as garlic, agricultural chemicals, pesticides, insecticides, or perfumes can be highly aromatic. In this

Table 2. Gas Transmission Rate[a]

	(mL · mil)/(100 in.^{2} · 24 h · atm)				(mL · 25 μm)/(m^2 · 24 h · atm)			
	O_2	N_2	CO_2	He	O_2	N_2	CO_2	He
32 mol% EVOH	0.02	0.002	0.06	18.8	0.31	0.03	1.0	291.2
38 mol% EVOH	0.03	0.005	0.15	22.0	0.39	0.08	2.3	341.3
44 mol% EVOH	0.08	0.008	0.23	25.3	1.2	0.12	3.5	391.5
PVDC	0.15	0.01	1.1	27.3	2.3	0.19	17.4	423.2
Oriented nylon	3.6	1.4	13.2	232.0	55.2	21.7	205.2	3596
Oriented PET	4.6	0.46	19.6	180.0	71.3	7.1	303.8	2790

[a] At 23°C (73°F), 65% rh.

Table 3. Protective Glove Performance[a]

Chemical or Solvent	Time	Chemical or Solvent	Time
Acetone	1440	MMA	1440
Acetonitrile	1440	MEK	1440
Aniline	1440	Methylene chloride	1440
Benzene	1440	Nitrobenezene	1440
Carbon disulfide	1440	Sodium hydroxide	1440
Chloroform	1440	Styrene	1440
Diethylamine	60	Sulfuric acid 93%	1440
DMF	1440	Tetrachloroethylene	1440
Ethyl acetate	1440	Toluene	1440
n-Hexane	1440	Trichlorethylene	1440
Methanol	1440	Xylene	1440

[a] Breakthrough time in minutes (1440 min = 24 h).
Source: Evaluated by ASTM F739.

Table 4. Resistance to Fuels[a]

	[(g · mil)/(100 in.^{2} · 24 h · atm) at 40°C]			
Fuel or Component	32% EVOH	27% EVOH	Nylon	HDPE
REF Fuel C	0.0009	0.0008	0.015	208
CM15	0.61	0.46	5.0	168
MTBE15	0.0007	0.0006	0.012	166
MTBE100	0.0002	—	0.003	26
Toluene	0.001	—	—	301
Isooctane	0.003	—	—	24

[a] *Note:* REF Fuel C—100% hydrocarbon; CM15—REF Fuel C + 15% methanol; MTBE15—REF Fuel C + 15% MTBE.

case, the desire is to retain the aroma in the package and not let it escape into the surrounding environment.

As shown in Table 6, EVOH can provide protection to aroma migration.

Mechanical and Optical Properties

Although not intended for use as structural resins, EVOH resins have high mechanical strength, elasticity, and surface hardness, and excellent weatherability. These films are highly antistatic in nature, preventing the buildup of dust and/or static charges. EVOH films have a very high gloss and low haze, resulting in outstanding clarity characteristics. Table 7 compares the mechanical and other properties of EVOH resins.

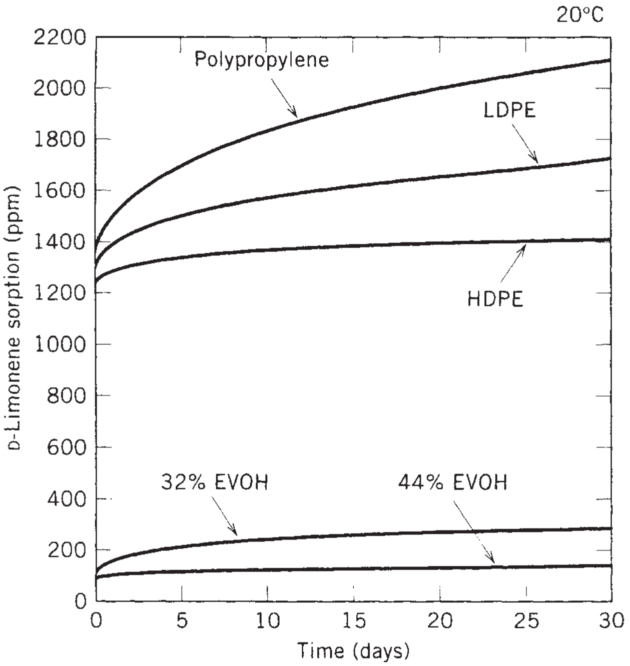

Figure 3. D-Limonene sorption.

Processability

EVOH resins are thermoplastic polymers easily processed on conventional fabrication equipment without special modifications. Using commercially available equipment, EVOH resins, in conjunction with other resins, are suitable for use in the following processes:

- Blow film
- Cast film
- Sheet extrusion
- Blow molding
- Profile extrusion
- Extrusion coating

Table 5. Flavor Permeability

	Permeation [g/(m^2 · 24 h)]			
	73°F, 0% rh		73°F, 75% rh	
Structure	D-Limonene	Methyl Salicylate	D-Limonene	Methyl Salicylate
A	0.001	0.001	0.01	0.01
B	0.001	0.0003	0.01	0.002
C	0.0003	0.0002	—	—
D	0.040	0.009	0.01	0.002
E	0.032	2.16	0.01	6.79
F	0.040	0.87	0.01	2.15

Note: A—HDPE/tie/EVOH/tie/EVA; B—LDPE/tie/PA/EVOH/PA/tie/LDPE; C—PA/tie/EVOH/tie/LDPE; D—LDPE/tie/EVOH/tie/LDPE; E—PP/LDPE/tie/PETG/tie/LDPE/PP; F—PVDC concentrated OPP.

Table 6. Aroma Protection

		Days to Aroma Leakage			
Construction	Thickness (μm)	Vanillin (Vanilla)	Menthol (Peppermint)	Piperonal (Heliotropin)	Camphor
PET/EVOH/LDPE	12/15/50	15	25	27	>30
OPP/EVOH/LDPE	18/15/50	30	>30	27	>30
PET/EVOH	12/15	>30	>30	30	>30
PET/LDPE	12/50	2	16	5	>30
OPP/LDPE	17/50	6	2	1	13

Depending on the requirements, EVOH resins can be coextruded with all types of polyolefins, nylon, polystyrene, polyvinyl chloride, and polyester. Downstream processing such as thermoforming, vacuum forming, and printing is easily accomplished with EVOH resin- or film-containing structures.

Regulatory Approvals

Depending on the resin grade, EVOH resins and films have FDA approval for direct food contact as specified in the code of Federal Regulations, Title 21, Section 177.1360. EVOH resins and films can also be used in high-temperature laminates (retortable applications), provided that a functional barrier layer is used to separate the EVOH layer from the food product.

Various other approvals related to the use of EVOH resins and films in meat and cheese products and in other countries such as Latin America, Canada, and Europe have been granted by the appropriate regulatory agencies.

EVOH resins are considered nontoxic according to the USP Class VI test protocol.

PACKAGING STRUCTURES

Throughout the world today, the primary use for EVOH resins and films is food packaging. All plastic multilayer structures containing EVOH provide a cost-effective alternative to traditional forms of packaging such as glass or metal. In addition, they also offer other advantages such as convenience of use and source reduction of packaging materials.

Rigid and semirigid containers such as bottles, trays, bowls and tubes, flexible films, and paperboard cartons containing EVOH as the functional barrier layer are commercially available today. These structures utilize the multilayer concept to protect the barrier layer (EVOH) from the effects of moisture. This concept is also used to produce an economical structure by using relatively inexpensive materials, such as polyolefins, as the bulk of the structure. Most multilayer structures used today have five to nine layers. Multilayer structures can be produced by either coextrusion and lamination technology.

When using EVOH in multilayer structures, it is necessary to use an adhesive layer to gain adequate bonding strength to the other polymers. Commercially available adhesive resin such as Admer (Mitsui Petrochemical Industries Ltd.), Plexar (Equistar), Tymor (Morton Chemical), or Bynel (DuPont Company) are suitable for use with EVOH resins.

Rigid and Semirigid Containers

The most common methods of producing these containers are thermoforming, blow molding, and profile extrusion. Most thermoformed containers are produced in a two-step process. First a coextruded multilayer sheet is produced. This sheet, containing a barrier layer (EVOH), is then formed into the final container using either melt-phase or solid-phase thermoforming technology. There are two

Table 7. Mechanical Properties of EVOH Resins

Property	Unit	EVOH Resin Grades				
Ethylene content	mol %	27	32	38	44	48
Melting point	°C	191	181	175	164	156
Crystalization temperature	°C	167	161	151	142	134
Glass-transition temperature	°C	72	69	62	55	48
Melt index at 210°C	g/10 min	3.0	3.8	3.8	13.0	14.7
Density	g/mL	1.20	1.19	1.17	1.14	1.12
Tensile strength, break	psi	10,385	10,385	6,685	7,395	5,405
Tensile strength, yield	psi	13,655	11,235	9,385	8,535	6,260
Elongation, break	%	200	230	280	380	330
Elongation, yield	%	6	8	6	7	3
Young's modulus	psi × 10^4	45.5	38.4	34.1	29.9	29.1
Rockwell hardness	M	104	100	93	88	—
Tabor abrasion	mg	—	1.2	1.2	2.0	2.2

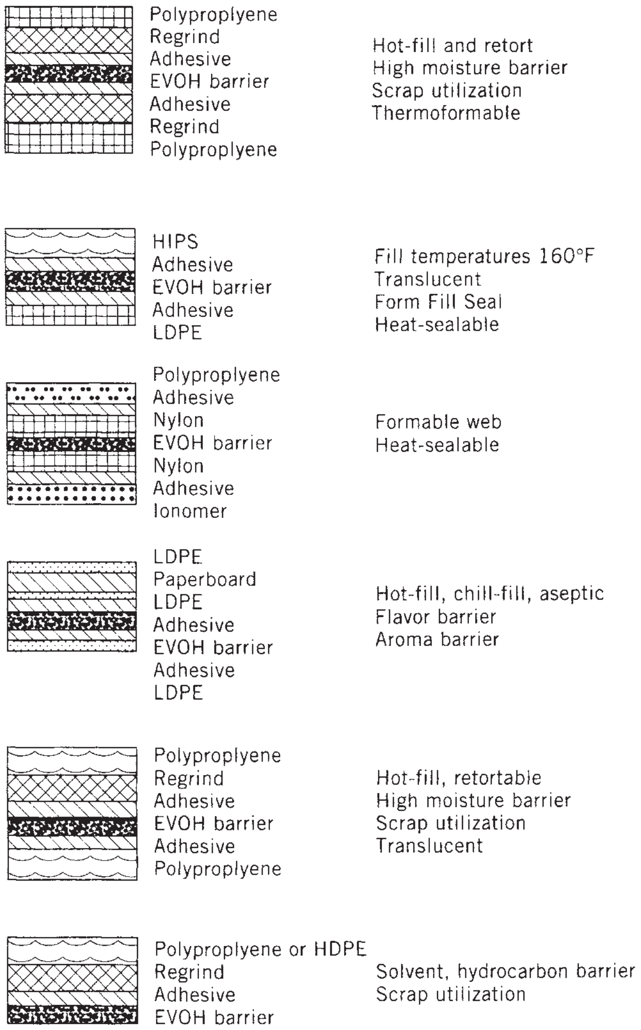

Figure 4. Barrier constructions.

exceptions to the two-step process: the use of rotary thermoforming and the "omni" process originated by American National Can, which is a variation of the injection blow-molding process.

Multilayer bottles are produced using either extrusion blow-molding or injection blow-molding technology. Likewise, tubes can be produced using direct-profile coextrusion, heat sealing of extruded sheet, or blow-molding coextrusion processes.

Figure 4 shows typical multilayer structures used for rigid and semirigid containers.

Flexible Films

Flexible films consume the largest volume of EVOH of any package structure. Flexible films are produced by several methods. These include solution coating, laminating coextrusion coating, and coextruding either tubular or flat (cast) films. Converting operations such as vacuum forming, printing, form, fill, seal, and heat sealing are used to fabricate packaging structures from these films. Figure 4 shows typical multilayer flexible-film constructions. Monolayer EVOH films, either biaxially oriented or nonoriented, can be used in conjunction with the laminating or coextrusion coating process to also produce flexible films.

Paperboard Containers

In recent years, the use of EVOH to replace aluminum foil as the barrier layer in paperboard cartons has grown rapidly. These containers, used primarily for juice products but also for nonfood products, utilize the EVOH in several ways. Besides serving as an oxygen barrier, the EVOH layer can also be used to prevent "flavor scalping" (fresh juice) or as an aroma barrier (laundry products). Coextrusion coating onto paperboard is the primary

Table 8. EVOH Film Properties

Property		Unit	EVAL™ EVOH Grades EF-XL	EF-F	EF-E	Oriented Polyamide	PVDC-Coated Polypropylene
Thickness		mils	0.6	0.6	0.8	0.6	0.9
Tensile strength at break	MD	psi	29,700	11,600	10,150	23,450	24,100
	TD		28,300	7,550	6,400	31,290	31,200
Elongation at break	MD	%	100	180	260	90	140
	TD		100	140	190	90	60
Young's modulus	MD	psi × 10^4	51.0	28.4	28.4	24.2	28.4
	TD		51.0	27.0	27.0	21.3	37.0
Tear strength	MD	g	260	380	460	500	300
	MD		330	300	440	450	200
Dimensional stability at 14°C, 1 h	MD	%	−4.0	−2.7	−1.6	−1.5	−10.4
	TD		−0.5	−0.9	−1.2	−0.9	−12.5
Melting point		°C	181	181	164	220	165
O_2 transmission rate at 20°C		mL/100 in.^{2}					
65%		24 h · atm	0.01	0.02	0.08	1.92	0.55
85%			0.04	0.08	0.17	5.4	0.55
100%			0.23	1.0	0.52	19.0	0.55
H_2O transmission rate 40°C, 90% rh		g/100 in.^{2} 24 h · atm	2.6	6.5	2.3	16.8	0.3

Table 9. EVOH Applications

Fabrication Process	Application	Structure
Cast coextrusion	Processed meats, natural cheese, snacks, bakery	PP/nylon/EVOH/nylon/LLDPE Nylon/nylon/EVOH/nylon/Surlyn®[a] Nylon/EVOH/Surlyn® PET/LDPE/EVOH/Surlyn®
Blown coextrusion	Processed meats, bag-in-box, red meat, pouches	Nylon/LLDPE/EVOH/LLDPE LLDPE/EVOH/LLDPE LLDPE/EVOH/LLDPE/Surlyn® Nylon/EVOH/LLDPE
Lamination	Coffee, condiments, snacks, lidstock	OPET/EVOH/LDPE/LLDPE PP/nylon/EF-XL/nylon/LLDPE OPET/EVOH/OPET/PP
Coextrusion coating	Juice, bakery, laundry products	LDPE/paperboard/LDPE/EVOH/LDPE LDPE/paperboard/LDPE/EVOH/LDPE/EVOH OPP/LDPE/EVOH/LDPE/EVA
Thermoforming	Vegetables, fruit sauce, entrees, pudding	PP/regrind/EVOH/regrind/PP PS/EVOH/LDPE
Coextrusion blow molding	Ketchup, sauces, cooking oil, salad dressing, agricultural chemicals, juice	PP/regrind/EVOH/PP HDPE/regrind/EVOH/HDPE HDPE/regrind/EVOH PET/EVOH/PET/EVOH/PET
Profile coextrusion	Cosmetics, toothpaste, condiments, pharmaceuticals	LDPE/EVOH/LDPE LDPE–LLDPE/EVOH/LDPE–LLDPE

[a] Surlyn® is a registered trademark of E. I. Dupont de Nemours & Co, Inc.

Note: Tie layers are used between any layers of EVOH and either PE or PP. These are omitted from the table for clarity.

process for producing these containers. Typical structures may be seen in Figure 4.

EVOH FILMS

In addition to EVOH resins, monolayer EVOH films are also available. These films, either biaxially oriented or nonoriented, provide a unique balance of attractive appearance of toughness, dimensional stability, barrier properties, and economics. When combined with other types of polymeric films in a laminating or laminating–coating process, the resulting structure provides properties similar to those of a coextruded structure. Table 8 lists the properties of several monolayer EVOH films.

APPLICATIONS

Since the introduction of EVOH resins and films in Japan during the 1970s and in the United States and Europe in the 1980s, the use of these materials has continued to grow. Table 9 shows a portion of the commercial applications utilizing EVOH as a barrier layer.

Economics

To determine the most economical barrier polymer, the price of obtaining the barrier needed for a given application at a given set of use conditions and a given packaging structure must be compared. Factors such as price per pound of the polymer, polymer yield, oxygen transmission rate, and the use of recycled scrap must be considered.

When the low barrier cost of EVOH resins is combined with their recyclability and the new developments in coextrusion technology, the packaging specialists has available a means to design a packaging structure that will not only compete with glass and metal containers on a performance basis but also provide a definite economic advantage.

BIBLIOGRAPHY

General References

M. Salame, “The Use of Low Permeation Thermoplastics in Food & Beverage Packaging,” in *Coatings and Plastics Preprints of the 167th Meeting of the American Chemical Society, Division of Organic Coatings and Plastics Chemistry*, **34**(1), 515 (April 1974).

R. Foster, “Plastics Barrier Packaging—The Future is Bright,” in *Proceedings of the Society of Plastics Engineers, Inc.*, Regional Technical Conference, April 1984.

C. R. Finch, “Coextrusion Economics,” in *Coextrusion Comes of Age*, Society of Plastics Engineers, Extrusion Division Regional Technical Conference, Chicago Section, June 1981.

K. Ikari, “Oxygen Barrier Properties and Applications of Kuraray EVAL Resins,” in *Proceedings of the Second Annual International Conference on Coextrusion Markets and Technology*, Schotland Business Research, Inc., Princeton, NJ, Nov. 1982.

S. Sonsino, *Packaging Design*, Van Nostrand Reinhold, New York, 1990.

EUROPEAN PACKAGING LEGISLATION

Luigi Rossi
European Commission; and
Strategic Advisor for Keller and
Heckman LLP

At the end of the 1950s, following the issue of U.S. Food and Drug Administration (FDA) Act on food contact materials (FCM, 1958), some European countries began adopting the first regulations and recommendations. All these new European rules were designed to avoid excessive release into foodstuffs of the substances contained in the materials, especially in plastics, and above all to rule out the possibility of a health hazard to the consumer as a result of the toxicity of some of the substances used to manufacture these materials.

In the European Union (EU) the differences in the provisions adopted at national level were sources of problems for packaging companies, which were forced to adjust production to the country of destination and apply for authorization to use a new material. This led to a growing need to approximate ("harmonize") the various laws and thereby remove legal barriers to community trade in packaged food which, with the abolition of customs duty and the new systems of sales (supermarkets) and lifestyles (pre-packaged food), were developed extensively.

In 1960 the Council of Europe (CoE) takes the initiative to harmonize the rules on plastics (see later). In 1972 the European Commission (EC) drew up a broad program of action designed to harmonize all existing national laws in the field of FCM (plastics, paper, ceramics, rubber, etc.). Because this attempt is not yet finished, depending by the material considered, rules derived from EU or national authorities or CoE exist in Europe, making the description of European Packaging Legislation extremely difficult. Therefore this note describes briefly the main aspects of current legal situation in Europe summarizing the rules on the basis of the material and the origin.

EU LEGISLATION

The legal binding acts (= laws) are called "measures" and can be adopted under a directive or regulation[*]. These measures can be divided into three categories:

- Measures applicable to all materials and articles
- Measures applicable to one category of materials and articles
- Measures relating to individual or groups of substances

All the measures adopted and mentioned here may be found in all EU official languages in EC website[†] and summarized in Figure 1.

Measures Applicable to All FCM

Framework Legislation. The Framework measure, Regulation (EC) 1935/2004, adopted in 2004 replaces those adopted in 1976 and 1989. It establishes for all FCM:

- The definition of the scope
- The obligation to manufacturing the FCM following the "good manufacturing practice"
- The interdiction of an "unsafe" migration of the constituents of the materials or articles (safety clause)
- The prevention of any unacceptable contamination of the foods even if this contamination does not imply health problems (inertness clause)
- The prevention of any deterioration in the organoleptic characteristics of foods (i.e., taste, odor, or texture of the foods)
- The information, through an appropriate labeling ("for food contact") or a symbol (🍷🍴) to the consumer or food industry of the suitability of the materials and articles to come in contact with food (labeling clause)
- The obligation for the business operators to trace FCM i.e. to identify the businesses from which, and to which, the FCM are supplied (traceability clause)
- The procedures for the authorization of substances and materials
- The obligation to consult the European Food Safety Authority (EFSA) if the specific measure deals with aspects having an impact on the consumer health
- The safeguard measures to be taken in certain dangerous situations
- The public access to the technical dossier made available by the business operator when the authorization of a substance is required
- The right of the business operator to require a certain confidentiality on the management by EC or EFSA of certain data, the disclosure of which may significantly harm its competitive position
- The possibility to share data of the technical dossier needed to obtain the authorization of a substance to avoid
- The obligation to have declaration of compliance for materials and articles covered by specific legislation
- The obligation for the MS to check the conformity of FCM to the related laws (control clause)
- The establishment of a Community Reference Laboratory (CRL) for food contact materials (see later)

Regulation on Good Manufacturing Practice (GMP). The obligation to apply the rules of GMP is included in general terms in the framework regulation. To ensure a

---

[*] Directives are binding acts that require the transposition in the national laws. Regulations are directly applicable legal acts.

[†] http://ec.europa.eu/food/food/chemicalsafety/foodcontact/legisl_list_en.htm

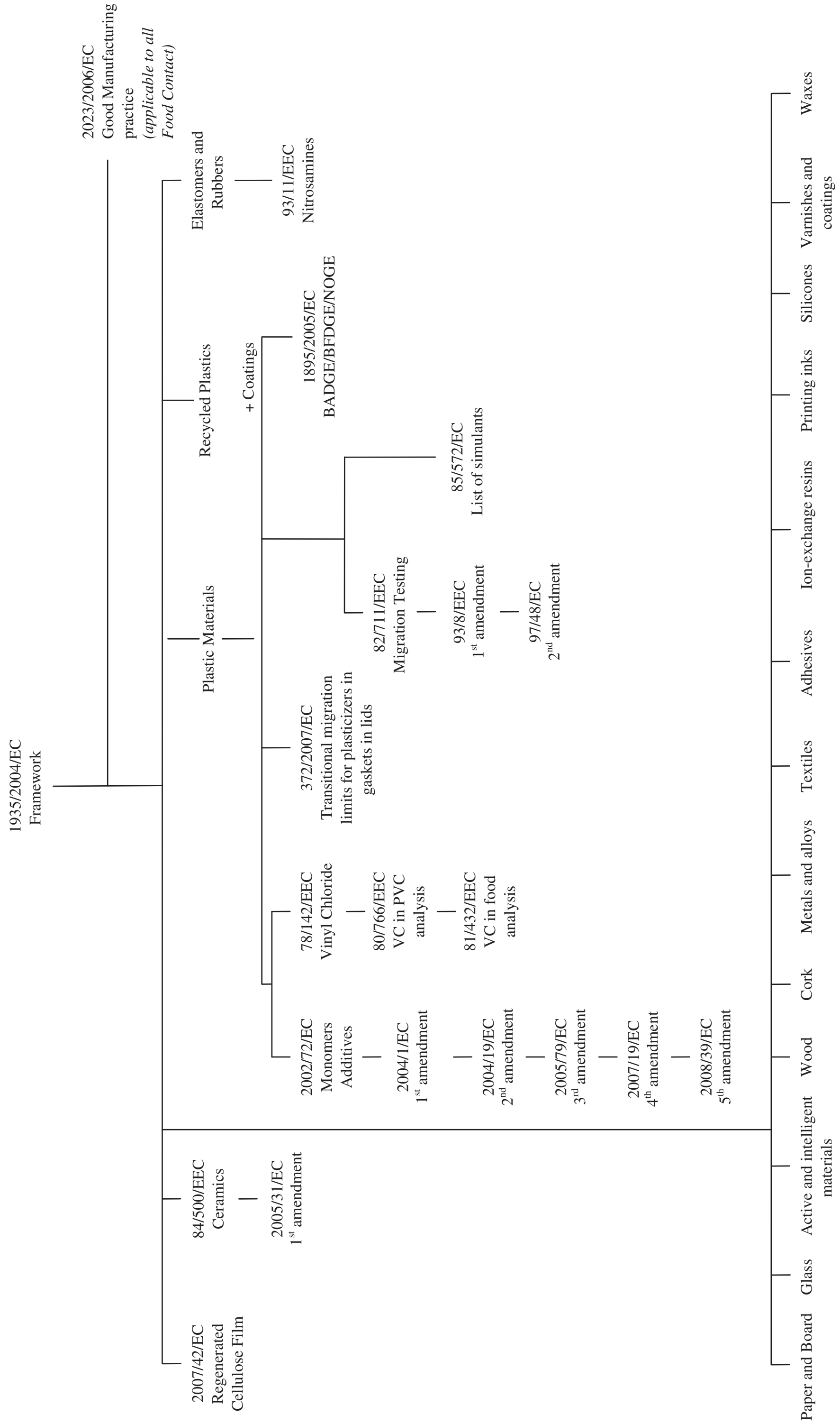

Figure 1. Overview of community legislation.

harmonized application of GMP throughout the EU and throughout the different business sectors, the basic principles of GMP are detailed in Regulation (EC) No. 2023/2006. These requirements, applicable as of August 1, 2008, have to be applied at all stages of production of FCM and in all sectors. All aspects of the GMP need to be adequately documented, and the documentation should be available to control authorities. Imports from third countries should also apply adequate GMP systems in their production. For two materials, GMP requirements have been further detailed— that is, for printing inks and for recycled plastics.

Specific Measures on A FCM

Measures on specific materials deal with the groups of FCM mentioned in Table 1. Until now, only four groups of materials have been regulated by EU measures: regenerated cellulose films, ceramics, plastics, and recycled plastics. Some general rules exist also for active and intelligent materials.

Directive on Regenerated Cellulose Film (RCF). Directive 93/10/EEC, which codified two previous directives, regulated the regenerated cellulose film. It establishes (a) a list of authorized substances and (b) the restrictions on the composition of the material.

In 2004 a new amendment, Directive 2004/14/EC, authorized a new type of regenerated cellulose film with a coating consisting of plastics, which is compostable and biodegradable in accordance with the requirement of packaging waste Directives.

Ceramics. Directive 84/500/EEC sets out migration limits for lead and cadmium and the method of analysis. Moreover, it specifies the requirement of the declaration of compliance as well as the supporting documentation to be made available to the national competent authorities on request. This documentation shall contain the results of the analysis carried out, the test conditions and the name and the address of the laboratory that performed the testing.

Table 1. Groups of Materials Including Recycled Materials which May Require an EU Legislation

Active and intelligent materials and articles
Adhesives
Ceramics
Cork
Rubbers
Glass
Ion-exchange resins
Metals and alloys
Paper and board
Plastics
Printing inks
Regenerated cellulose
Silicones
Textiles
Varnishes and coatings
Waxes
Wood

Directive on Plastics Materials. Finally, the Commission began to draw up rules for plastic materials. Due to the wide divergence of national regulations, their poor scientific basis and the need to reach a large agreement between Member States, the Commission was obliged to take a very cautious, step-by-step approach toward harmonization. Therefore the main provisions are dispersed in numerous directives and amendments. They are mainly regulated by three measures:

- Directive 2002/72/EC, which set out the main provisions
- Directives 82/711/EEC and 85/572/EEC, which set out the basic rules to checking the compliance with the quantitative restrictions and specifications inserted in the Directive 2002/72/EC

Their main provisions are related to:

- The overall migration limit (OML), which for all the plastics have the same value, that is, 60 mg/kg (of food/food simulant) or 10 mg/dm^2 (of surface area in contact with food)
- The positive lists of monomers and additives (for additives as of January 1, 2010), which collect all the substances authorized and then prevent the use of monomers and additives not listed
- The quantitative restrictions or specifications applicable to the substance(s) (e.g., SML, QM and QMA)
- The functional barrier (FB), which is a layer permitting the use of nonauthorized substances in the layer(s) not in direct contact with food, provided that (a) their migration in food or food simulant does not exceeds 0.01 mg/kg (of food/food stimulant) and (b) the substances are not classified in EU as proved or suspect “carcinogenic” “mutagenic” or “toxic to reproduction”
- Certain more restrictive provisions for young children
- The rules on the choice of food simulants in relation to food in contact and the conditions of contact (duration and temperatures) in the conventional, standardized migration testing

The field of application is quite limited because it applies only to materials and articles made up of one or more layers exclusively of plastics material. The multi layers consisting of at least one layer other than plastic are excluded even if the material in contact with food is made of plastic.

Recycled Plastics. Regulation (EC) No. 2008/1016, which applies to mechanical recycling of plastics, foresees the individual authorization of the recycling process at the community level based on the safety evaluation of the recycling process performed by EFSA. Because the recycling processes are unique based on technology applied, individual authorization dedicated to the applicant will be issued. All recycling processes shall be accompanied by an adequate quality assurance system that should be audited by member states. Recycled plastic as well as the materials and articles containing recycled plastics need to be accompanied by a declaration of compliance.

Directives Concerning Individual or Groups of Substances

While legislating on a broad scale (i.e., in relation to various sectors of production), the Commission has also been obliged to lay down rules for individual substances that have been the cause of considerable public concern. This applies to the individual measures related to vinyl chloride monomer used in PVC, mono- (MEG) and diethylene glycol (DEG) used in regenerated cellulose film, *N*-nitrosamines and *N*-nitrosatable substances from rubber teats and soothers, certain epoxy derivatives in plastics, azodicarbonamide in plastics, and some plasticizers in gaskets in lids.

NATIONAL LAWS

The national laws are not yet fully harmonized at the EU level, whereas, additional national laws remain in place. In these cases a possible option to avoid technical obstacles to the trade in the EU is given by the application of the so-called Principle of mutual recognition, set out in Articles 28 and 30 of the Treaty. It states that any product lawfully produced and marketed in one member state must be admitted to the market of any other member state. Therefore it is important to know the additional national laws in force in member states. Due the complexity of this issue, it is necessary to consult directly national legislations. Useful references can be found in the SANCO website* and on the Internet.†

COUNCIL OF EUROPE (COE)

In the absence of national laws or also, sometimes in their presence, the resolutions of the CoE may be useful to export in EU or in the marketing between member states. CoE is a European international institution that was created before the EU and is independent from it. CoE adopts resolutions, guidelines, and technical documents (TD) on FCM not covered by EU law. These documents are not binding texts unless the countries transpose (partially or totally) them into national law. Numerous resolutions, guidelines, and TD regarding various types of materials such as paper, inks, coatings, rubber, silicones, ions resin exchange, cork, and metals have been adopted. Some have been recently transposed into national legislation of some EU countries. All CoE adopted texts are reported in the CoE website.‡

OTHER (CEN, JRC)

Other European organizations set out not binding guidelines in the field of the method.

The Commission Agency, Joint Research Center (JRC), was selected as CRL. Its activity is described in its website.§

The European Committee for Standardization ('CEN') produces harmonized standards to develop and validate test methods. It established several validated method of analysis for the determination of overall and specific migration limits. All the methods adopted by CEN are described in the CEN website.¶

FINAL CONCLUSIONS

Harmonization of legislation at the community level is moving forward quite slowly for various reasons. However, the harmonization continues and will continue as necessary to remove the technical barriers to the exchange and ensure more safety in the use of FCM.

EXPORT PACKAGING

Frank W. Green
Point O'View

Export shipments have been a major business for thousands of years. Even today, export cargo is carried by surface ships in the holds and on decks. Since the worldwide acceptance of containerization, a large percentage of exports is moved in cargo containers. A smaller, but growing, quantity of high-value and high-priority items is shipped by air as break bulk or in air containers.

There are no standards, rules or regulations, codes, references, or guidelines for the export packaging of specific products. In a sense, every item, destination, and form of shipment dictates the requirements. When packaging for export, every detail must be carefully considered. The products and packages will be completely out of the control of the shipper, and they may be "somewhere out there" for weeks. Export shipping is the test. The package fails at its weakest point. It is almost impossible to overpack. Export shipments must arrive in good order. They may have taken months to arrange and to produce. They cannot be easily replaced or repaired at destination.

HAZARDS OF EXPORT SHIPMENTS

The packaging engineer must understand and meet the requirements and hazards of various forms of shipments (see the Distribution hazards article).

1. Break bulk cargo in the holds and on the docks of oceangoing surface vessels of many types, sizes, flags, and ages.

---

* http://ec.europa.eu/food/food/chemicalsafety/foodcontact/index_en.htmt

† www.foodcontactmaterials.com

‡ http://www.coe.int/T/E/Social_Cohesion/soc-sp/Public_Health/Food_contact/

§ http://crl-fcm.jrc.it/

¶ http://www.cen.eu/catweb/67.250.htm

2. Unitized loads in the holds of surface ships.
3. Containerized loads on container ships, on the decks and in the holds of cargo vessels.
4. Transport by lighters and barges; on open boats through surf to sandy beaches.
5. Rollon, rolloff (Ro-Ro).
6. Containerized air shipments plus ground handling and transportation.
7. Individual packages and unitized loads shipped by air freighters and in the holds of passenger planes.
8. Miscellaneous combinations of modes of transportation, handling, and intermittent storage in foreign places and unknown conditions.

Export packaging encounters at least two domestic movements that involve the usual hazards of handling, loading, dropping, compression, and moisture, plus the hazards of transportation. One major exposure is during the movement to the seaport or the gateway airport. The second involves the customs procedures and storage of the country of debarkation, multiple handling, unforeseen conditions of transshipment, and eventual delivery. Products must be packed for the toughest part of the journey and survive all of the exposures.

Only about 30% of the cargo losses can be classed as fortuitous losses resulting from sinking, stranding, fire, collision, seawater, or heavy weather. One ship is lost, somewhere in the world, almost every day. Approximately 70% of the losses may be preventable:

10% Water damage—freshwater, sweat, condensation, and saltwater.

20% Theft, pilferage, and nondelivery

40% Handling and stowage—container damage, breakage, leakage, crushing, contact with oil and other cargo, contamination, and failure of refrigeration or other equipment

During transit, cargo must withstand the conditions of rough seas, turbulent air, and substandard roads.

At sea, a ship may move in six different directions at the same time. A top-loaded container may travel 70 ft (~20 m) in each direction with each 40° roll as often as eight or nine times per minute. Figures 1 and 2 diagram the movements involved. The center point is least subject to these movements, but the shipper does not control the location and stowage of the cargo or of individual containers.

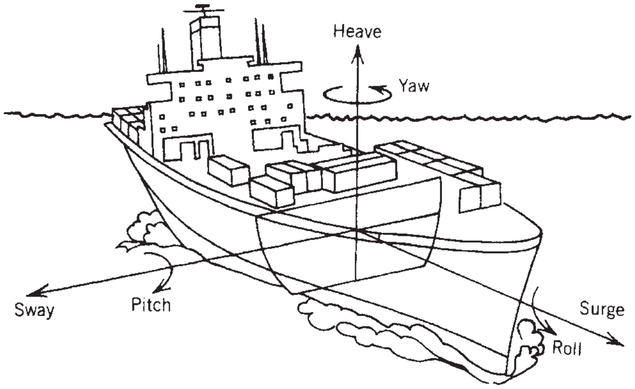

Figure 1. The six directions of motion of a ship at sea.

SPECIFIC CONDITIONS

With the above as a brief introduction to the hazards of international cargo movements, the packaging engineer should further study this subject and the conditions that may exist at the ports of embarkation and debarkation.

Brief descriptions of port conditions and equipment are provided in *Ports of the World* (1, 2) and similar publications. Information can be obtained from the cargo carriers regarding their equipment, methods of handling, routes, stops, trans shipment, and other details. They can also provide some information about local conditions at the port facilities. Some marine underwriters may have constructive suggestions. The consular staffs and the commercial development departments of each country are well informed. Foreign sales agents can provide details about the customers and their facilities, needs, and preferences. Too often the shipper is uninformed and relies on gossip rather than acquiring a realistic understanding of this complex subject.

PRODUCT ANALYSIS

Every facet of the products to be exported must be analyzed, and the potential problems, even marginal ones, must be identified. Export handling and shipping expose the weaknesses if they are overlooked.

Corrosion and Mildew. All metals must be protected against water and moisture for surface transportation and even for air shipment from or to humid and tropical areas. All natural materials (e.g., leather, cotton, wool, and paper) must be protected against moisture, fungus, and mildew.

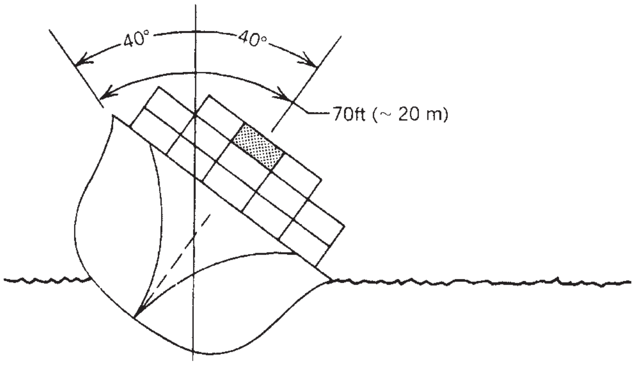

Figure 2. The distance (~20 m) traversed by a top-loaded container in a 40° roll.

Problems can begin because the products are not thoroughly cleaned for fingerprints, cutting or cooling oils, dirt, and foreign matter, or because of unnoticed rust, mildew, or local moisture in the packages. In transit and in storage, the moisture and mildew, condensation, or sweat may find the weak point in the packaging and cause irreversible damage. If the product surface is critical or if the item is expensive or choice, the damage may be total.

When the problems are identified, corrosion inhibitors (special oils and petrolatums) or properly used vapor-phase inhibitors and waterproof wrapping are applied. For electronic equipment and critical metal surfaces or hidden areas, desiccants with sealed moisture-vapor barriers are used. If possible, the critical sections or elements are removed from the larger units and packaged separately (inside the larger box or a sheathed crate). A small vapor-phase inhibitor or moisture-vapor barrier package provides better protection more economically than a thorough package for an entire unit. Containerization does not assure protection against water damage or moisture. Air shipment does not offer full protection because of entrapped atmosphere, and the cargo is on the ground more than in the air.

Pilferage and Nondelivery. It is essential to recognize that the exported products may stay days or weeks in conditions where pilferage is easy. Therefore, the packages should not identify the contents as worth pilfering for private use or resale. Identification of the product on the outside of the package by brand name, manufacturer's name, or the shape and size of the box is an open invitation to steal. A damaged package exposes the contents for pilferage.

Cigarettes, liquor, cameras, stereos, jewelry, furs, small appliances, and many other items are ideal targets for pilferage. Many consignees use code identification because their names on the packages would encourage pilferage. Some even have the items delivered to a "front" to avoid identification.

With the potential problem of pilferage identified, steps should be taken to assure special handling and accountability. Packages should be stored in separate locked areas and on board in lockers or safes.

Nondelivery occurs when the packages are stolen, destroyed, lost, unloaded and left at the wrong destination, or misdelivered. Adequate, permanent, and prominent markings help to avoid some of these problems. Unitizing or using master overpacks is also helpful.

Breakage. The internal weaknesses of electronic products equal the fragile construction, design, or materials of many products; any part that extends; and any item that is not in balance are all subject to breakage or physical damage. It may be necessary to protect the package from the product because of a dense weight load or severe imbalance.

Any product that is hard to handle, tends to fall over, or is especially awkward for any reason must be given special consideration. Often, production equipment requires special handling, and provision must be made in the package. Skids and other devices may help to keep the equipment on its base and handled properly.

Cushioning, blocking, and bracing are all essential (see the Cushioning design article). Built-in lifting eyes or other devices, special skids and pallets, and guide marks for the stevedores are helpful. On large items, the balance and the lifting points should be marked. Occasionally, an experienced exporter includes special instructions and photographs with the documentation and on the outside of the packages or crates.

Contamination. Some products can be spoiled or damaged because they can absorb the odors or fumes from the other items that may be in the same container or nearby in the holds or warehouses. Often the people who work with these items ignore or forget these problems.

Precaution can be taken to specifically request the carriers not to expose the items to adverse conditions. Sealed moisture-vapor barriers may give further assurance. Packages should be marked to indicate that they should not be stowed with potentially harmful cargo.

If photographic supplies and other sensitive items are exposed to excess heat, light, or moisture, then damage can result. This type of problem must be identified, the product shielded in the packages, and full instructions provided to the carriers.

Hazardous Materials. The shipper must identify any hazardous materials. These should be separated and given special documentation and packing under strict rules and specifications. It is essential that each hazardous material is classified and properly identified on the packages, with the correct and legal labels.

It cannot be assumed that compliance with domestic regulations will assure foreign acceptance of the shipments. This requires special study. Improperly labeled cargo may not be shipped and can cause great confusion (see the Standards and practices article).

MARKS AND SYMBOLS

It is essential that proper markings and symbols be used. Even a poor package, adequately closed and marked, has a good chance of being delivered in reasonable order. An excellent package that is not adequately marked may never reach its destination.

Only those markings that are essential and appropriate should be used. Any other markings, or too many, can be confusing and serve no purpose. New, clean packages with no advertising or other printing should be used. The selected markings can be printed by the manufacturer of the packages or stenciled permanently. Crayon, chalk, marking pens, tags, and cards should not be depended on.

Code marks for the name of the consignee and of the shipper (if used) are best for products that might be pilfered (see the Code marking and imprinting article). These and port marks should be large, clear, and applied on the side, end, and top of each package (Figure 3). Required weight and dimension information should be clear.

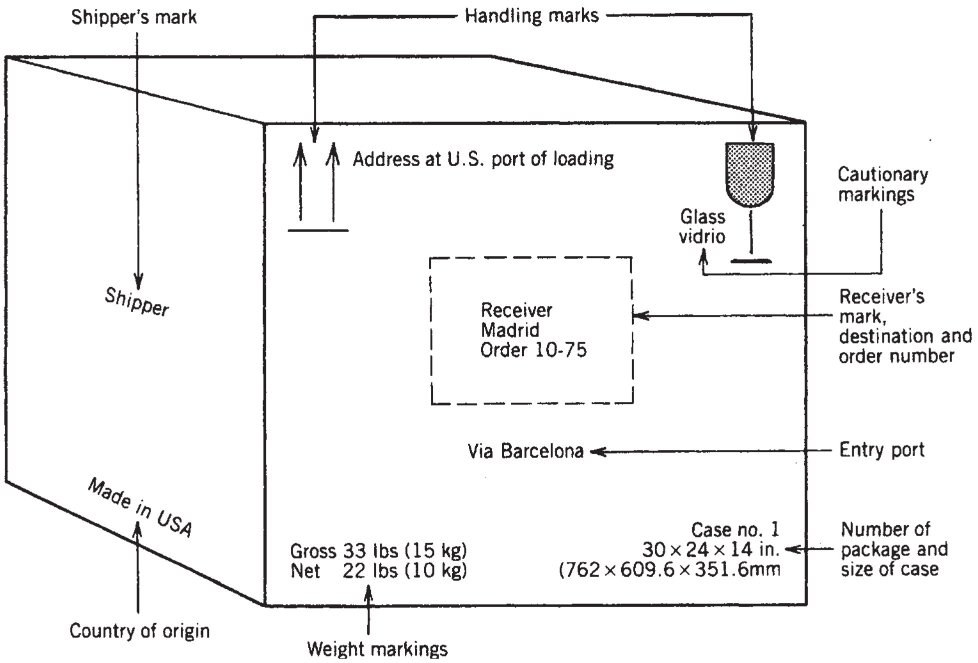

Figure 3. Assignment of codemarks for shipping.

Handling precautionary instructions should be printed or stenciled on the outside in the language of the destination country (Figure 4). Many times the cargo handlers cannot read the language of the country in which they are working. Pictorial precautionary markings may be the most helpful (Figure 5). In general use, they are recognized and have replaced a wide variety of symbols used in the past. Regardless of the markings, it is essential to package adequately and protect the products being shipped because the precautionary marks are frequently ignored.

When a large number of units are being moved in a single shipment, it helps to corner-code mark them with a distinctive symbol or to color code the opposite top corners with triangles or stripes. If a series of shipments is being sent to the same destination to be collected and staged for further inland shipment, the same method of coding should be used. This helps to reduce the number of stray packages.

When a number of packages are being shipped together, they should be numbered on the packages with the same numbers as the documentation. If there are 18 packages in a shipment, they should be numbered on the packages as 1/18, 2/18, 3/18, …, 18/18. Thus, if a package is missing, it can be checked on the documents for size, weight, and contents.

PACKAGING FOR EXPORT

Some exporters use their domestic packages for export. This is not good practice, but it may be economical. Preparation of domestic packages for export includes the following:

1. Waterproofing by liners, overwrapping, or overbagging.
2. Master packing small to medium size packages.
3. Unitizing a quantity of packages with suitable strapping, adequate pallets, and shrink or stretch films.

Unless conditions are thoroughly understood, this applies even for air shipments because of ground handling, storage, and trans-shipment.

Packaging for Break Bulk. This is the traditional form of shipment for small and large items stowed in holds or on the decks of surface ships. The individual packages are handled by the ship's gear individually or on stevedore pallets. They are pushed or moved manually, or sometimes by roller conveyor or lift truck, out of the square of the hatch to wings. They are stacked with other cargo and used to help brace the loads against movement as the vessel rolls and pitches. There is a loading plan specifying that the lightweight items should go on top of the heavier and more rugged cargo and that special classes of products should be given special treatment. The plan must also consider late cargo and the sequence of discharge at ports of call. Packages must withstand a static load of similar material 20 ft (6.1 m) high without distortion or rupture throughout the intended voyage. This applies in the lateral as well as the vertical direction. Problems of shock and vibration may be 50 times those normally experienced in domestic transit. Moisture is usually encountered during a sea voyage at deckside, in customs, and in lighters. Wooden boxes, sheathed crates, and cleated "export" plywood are appropriate for break bulk shipments when properly constructed, packed, and secured.

English	French	German	Italian	Spanish	Portuguese	Swedish	Japanese	Chinese	Arabic
Handle With Care	Attention	Vorsicht	Mannegiare con Cura	Manejese Con Cuidado	Tratar Com Cuidado	Varsamt	取扱注意	小心處理	بانتباه
Glass	Verre	Glas	Vetro	Vidrio	Vidro	Glas	ガラス	玻璃製品	زجاج
Use No Hooks	Manier Sans Crampons	Ohne Haken handhaben	Non Usare Ganci	No Se Usen Ganchos	Nao Empregue Ganchos	Begagna inga kroka	手鉤無用	勿用鉤子	عدم استعمال خطاطيف
This Side Up	Cette Face En Haut	Diese Seite oben	Alto	Este Lado Arriba	Este Lado Para Encima	Denna sida upp	天地無用	此面向上	هذه الجهه فوق
Fragile	Fragile	Zerbrechlich	Fragile	Frágil	Fragil	Omtaligt	壊物注意	易碎貨物	قابل للكسر
Keep in Cool Place	Garder En Lieu Frais	Kuehl aufbewahren	Conservare in luogo fresco	Manténgase En Lugar Fresco	Deve Ser Guardado Em Lugar Fresco	Forvaras kallt	冷暗所蔵	保持陰涼	احفظ بمكان بارده
Keep Dry	Proteger Contre Humidite	Vor Naesse schuetzen	Preservare dall umidita	Manténgase Seco	Nao Deve Ser Molhado	Forvaras torrt	水気厳禁	保持乾燥	احفظ بمكان جاف
Open Here	Ouvrir Ici	Hier offnen	Lato da Aprire	Abrase Aqui	Abra Aqui	Oppnas har	取出口	由此開啟	افتح هنا

Figure 4. Precautionary handling instructions.

Unitized Loads. In addition to the details already covered, it is necessary to note that the outside boxes in unit loads may be chaffed by other cargo during the ship's movement. The 20-ft (6.1-m) static load rule applies. It may be necessary to provide a wood or heavy-duty cover to distribute the superimposed weight and to protect the individual packages.

Containerized Loads. Cargo containers provide physical protection so the 20-ft (6.1-m) guideline does not apply. The moisture problem can sometimes be intensified because of minimum air circulation. Containers should be secured and loaded evenly from end to end. Containers should be thoroughly cleaned and inspected before use. There are special containers for unusual loads and conditions. The packages may be removed at portside and then face another domestic shipment to the consignees. Customs inspectors in some foreign ports do not restuff containers the way they were shipped. They sometimes repack with the larger and heavier items on top of the smaller items, for example.

Lighters, Barges, and Open Boats. Some modern barges may be similar to large containers. Lighters and open boats may provide the most difficult tests of the trips. The handling is doubled and may be crude or rough, partly because of greater exposure to sea water, fog, mist, and spray. Sound packaging is required.

Rollon, Rolloff (Ro-Ro). In this method of shipment, highway trailers and other units on wheels can be loaded and secured in the vessel for relatively short voyages. These modern ships offer good conditions, and the handling is minimized; however, the loading, unloading, customs, and storage are portside.

Containerized Air Shipments. If the containers are properly loaded and precautions are taken against moisture in the packages and on the ground, this method of shipment may be the safest. Domestic packaging can often be used if the delivery is known to be normal.

Individual Units by Air. Unit loads by air freighters and individual packages unitized by the airlines for shipment on air freighters may be moved automatically and have little or no handling or moisture problems. Individual packages in the holds of passenger planes, however, may experience many rough handlings. In the cargo space, the

Sling here *Fragile. Handle with care.* *Use no hooks*

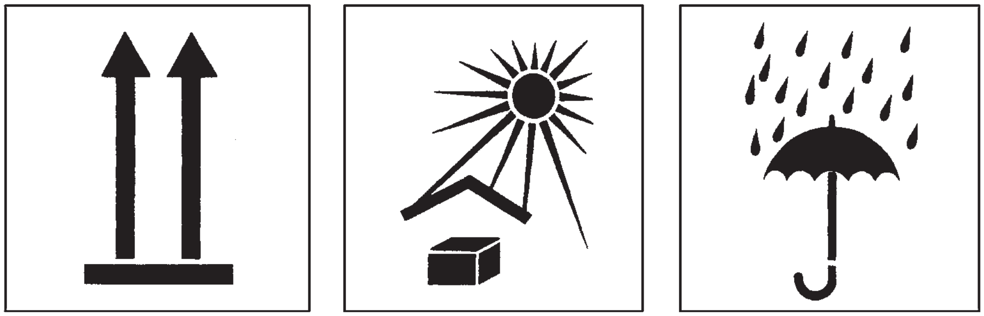

This way up *Keep away from heat.* *Keep dry*

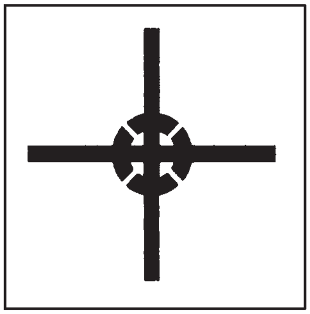

Center of gravity

U.S. STANDARDS

Do not roll *Hand truck here* *Keep away from cold*

Figure 5. Pictorial representation of precautionary markings.

handler usually cannot stand up straight and often resorts to crude methods of moving packages. The small items may be rolled or thrown and will not be thoroughly secured.

Miscellaneous Modes. Packages shipped to inland points may experience a good deal of rough handling, storage under unexpected conditions, and exposure to pilferage and corrosion.

GUIDELINES

If shipments can be fully controlled by the shipper and the consignee by containerization, documentation, representation at both ends, and complete understanding by all parties, there can still be serious trouble unless adequate packaging is used and properly implemented. It is almost impossible to design and develop packaging that is too good for export shipment.

BIBLIOGRAPHY

F. W. Green, "Export Packaging" in *The Wiley Encyclopedia of Packaging Technology* 1st ed., Point O'View, pp. 276–282.

1. *Ports of the World*, Benn Publications, Ltd., London, annual.
2. *Ports of the World, A Guide to Cargo Loss Control*, Insurance Company of North America, Philadelphia, Pa, 13th ed 1984.

General References

Preservation, Packaging and Packing of Military Supplies and Equipment, 2 volumes, Defense Supply Agency, Department of the Army, the Navy, the Air Force, Washington, DC.

EXTRUSION

J. A. Gibbons
Egan Machinery Company

INTRODUCTION

Extruders are the most common machines in the plastics processing industry. They are used not only in extrusion, but in most molding operations Molding and extrusion are the basic techniques of forming polymers into useful shapes. The molding process, which is normally intermittent, can fix three dimensions (height, width, length) of an object. The continuous extrusion process through a die can fix only two (height, width). These two processes are usually complementary rather than competitive and produce a wide variety of products as diverse as pigmented pellets, threaded closures, and refrigerator liners (1).

The extrusion process in which an Archimedean screw rotates within a cylindrical barrel is probably the most important polymer processing technique used today. It is used to manufacture continuous profiles such as fibers, tubing, hose, and pipe; to apply insulation to wire; and to coat or laminate paper or other webs (see Extrusion coating). This article, however, deals primarily with single-screw extruders for compounding polymers and producing pellets, for producing rigid or foam sheet, and for making blown or cast films.

The extrusion principle was first employed about 1795 for the continuous production of lead pipe. The first patents on an Archimedean screw extrusion machine were granted to Gray in England (2) and Royle in the United States (3). During the nineteenth century the machinery became refined for manufacturing rubber, gutta-percha, cellulose nitrate, and casein products. Modern extrusion technology as applied to synthetic thermoplastic polymers began in about 1925 with work on PVC (see Poly(vinyl chloride)). The first screw extruder designed specifically for thermoplastic materials appears to have been made by Paul Troester in Germany in 1935 (4).

SINGLE-SCREW EXTRUDERS

Modern single-screw extruders designed to process thermoplastic resins normally are <1 in. to 12 in. in diameter, although larger extruders have been built. The most common diameters for production-sized machines are 2–8 in. (51–203 mm). Figure 1 shows an 8-in. vented extruder with a barrel length of 32 diameter, and a 600-hp (447.4 kW) drive. The main features of an extruder are shown cross-sectionally in Figure 2.

The solid polymer fed to the extruder may be in the shape of powder, beads, flakes, pellets, or combinations of these forms. The extruder conveys, melts, mixes, and pumps the polymer at high temperature and pressure through a specially shaped die. The die's configuration and the solidifying or cooling process determine the shape of the product.

All extruders consist of a barrel, a screw, a drive mechanism, and controls. The heart of the extrusion process is the screw. It is fashioned with a helical thread or threads, along with varying channel depth. The function of the screw is to convey material and generate pressure in order to produce pellets or other shapes. In the case of a solids-fed screw the function is expanded to include solids conveying, compression, and melting. Rotation of the screw accomplishes all these functions.

Successful operation of an extruder depends on the design of the screw. The depth and length of each zone of the screw is determined by the product to be run. Barrier flights and/or mixing sections are sometimes built into the screw to improve its efficiency in melting and delivering a homogeneous polymer to the die at the proper temperature and pressure. The profile of the melting process in a mixing screw is shown in Figure 3.

An extruder interior schematic is shown in Figure 4. Here the solid resin is introduced into the hopper and, through the action of the rotating screw, is conveyed into

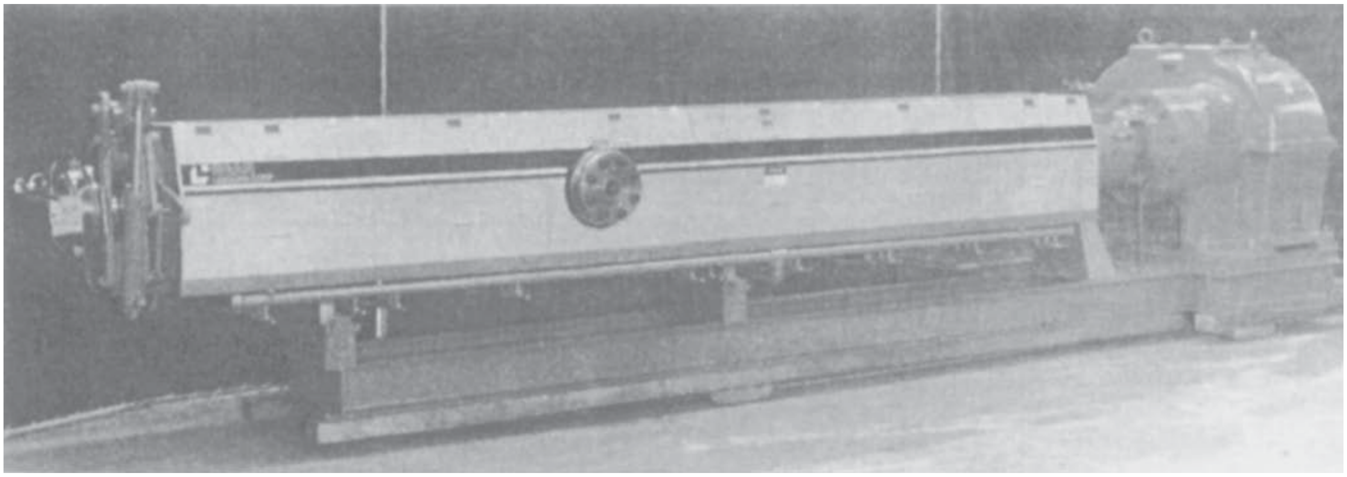

Figure 1. An 8-in. (203-mm) 32:1 L/D vented extruder.

the heated barrel. The screw in this section is feeding or conveying the solids and hence is quite deep. The geometry of the screw is such that the depth decreases in the transition zone, and the solids start to melt. Melting results from the shearing action of the screw as motor horsepower is converted into frictional heat. Barrel heaters are used for start-up and to supplement the melting process. The melt continues to be pumped toward the discharge, or die end, of the extruder through the metering section of the screw. (Metering is pumping at a given rate in a uniform manner, within close temperature and pressure tolerances.) The die then forms the polymer in the desired shape. Downstream cooling equipment solidifies and maintains that shape.

Screws are cut from alloy steel. The tops of the conveying flights are hardened or surfaced with special alloys for extended life. The clearance between screw and barrel is close. In operation, the screw floats in the barrel on a layer of melted polymer.

The barrel, or hollow cylinder in which the screw rotates, is manufactured from machined steel and built to withstand pressures of 7500–10,000 psi (51.7–68.9 MPa). Barrels are also lined with special alloys or hard-surfaced to extend life. The length of a barrel is defined as a multiple of its diameter (i.e., *L:D* ratio of 32:1 = a barrel:screw 32 diameter long). The length of an extruder barrel is determined by the polymer and process involved.

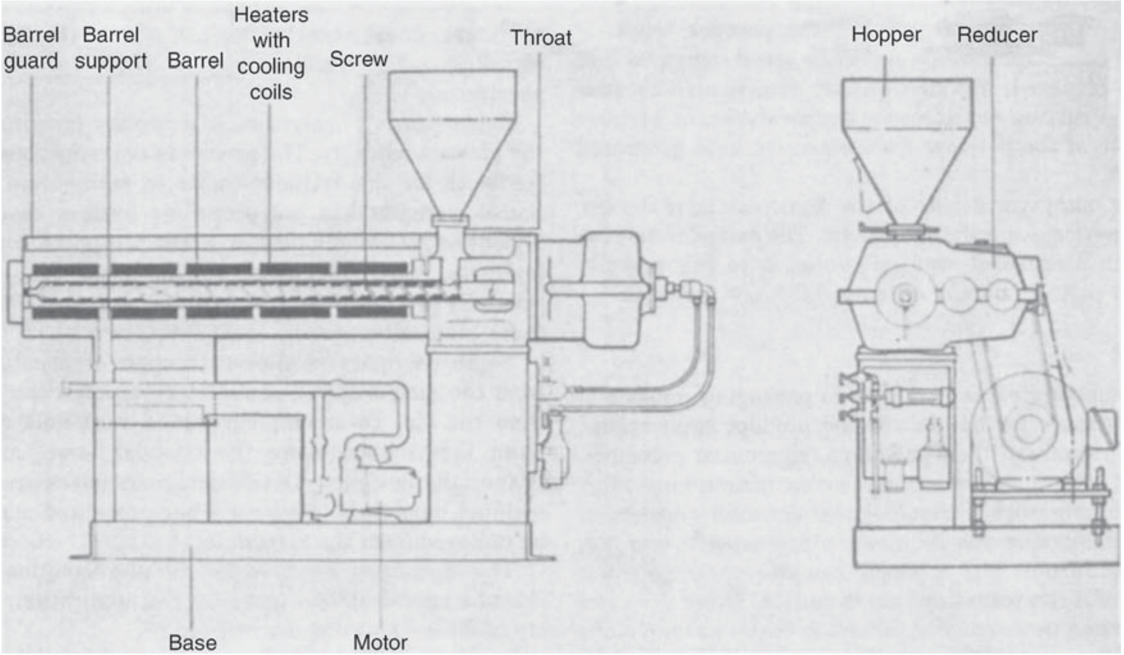

Figure 2. A cross section of an extruder.

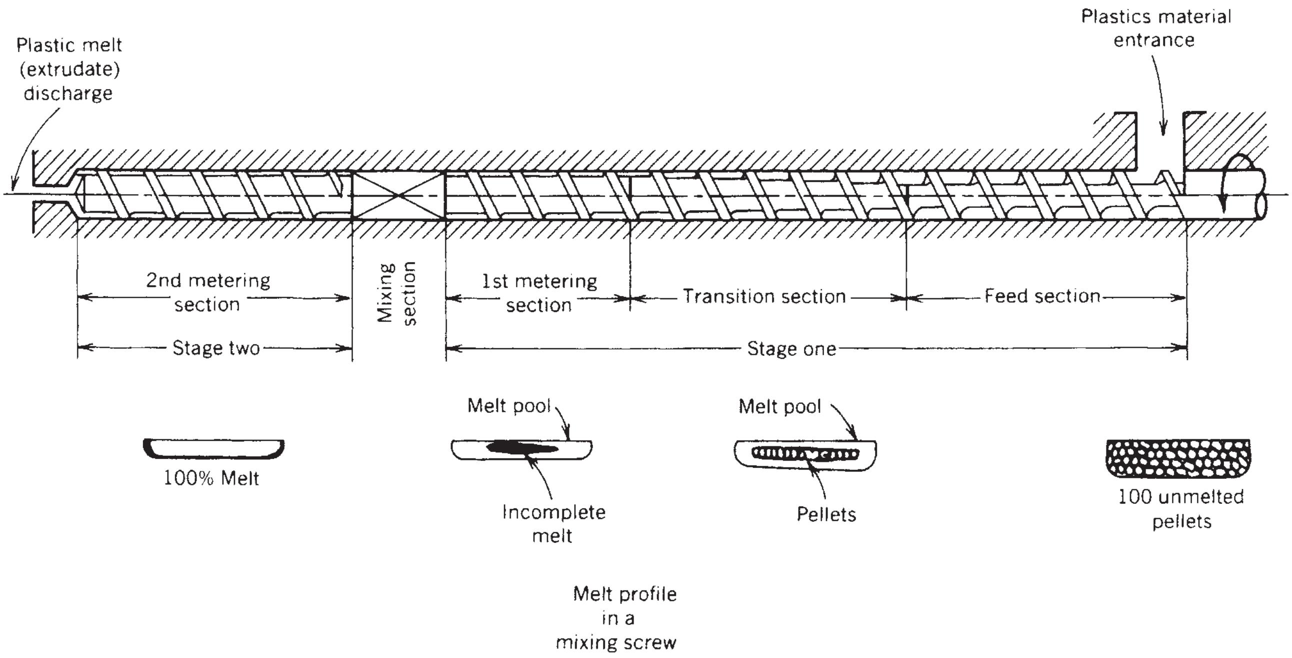

Figure 3. Melt profile in a mixing screw.

Extruders must be heated and cooled. Electrical heating or fluid heating can be used on the barrel. In electrical heating, resistance heating elements in various forms surround the barrel. Tubes for cooling fluid, cast in aluminum, also contain heating elements. Some barrels are built with jackets through which heating and cooling fluid can be circulated. Extruder barrels are usually divided into zones of specific lengths, each of which can

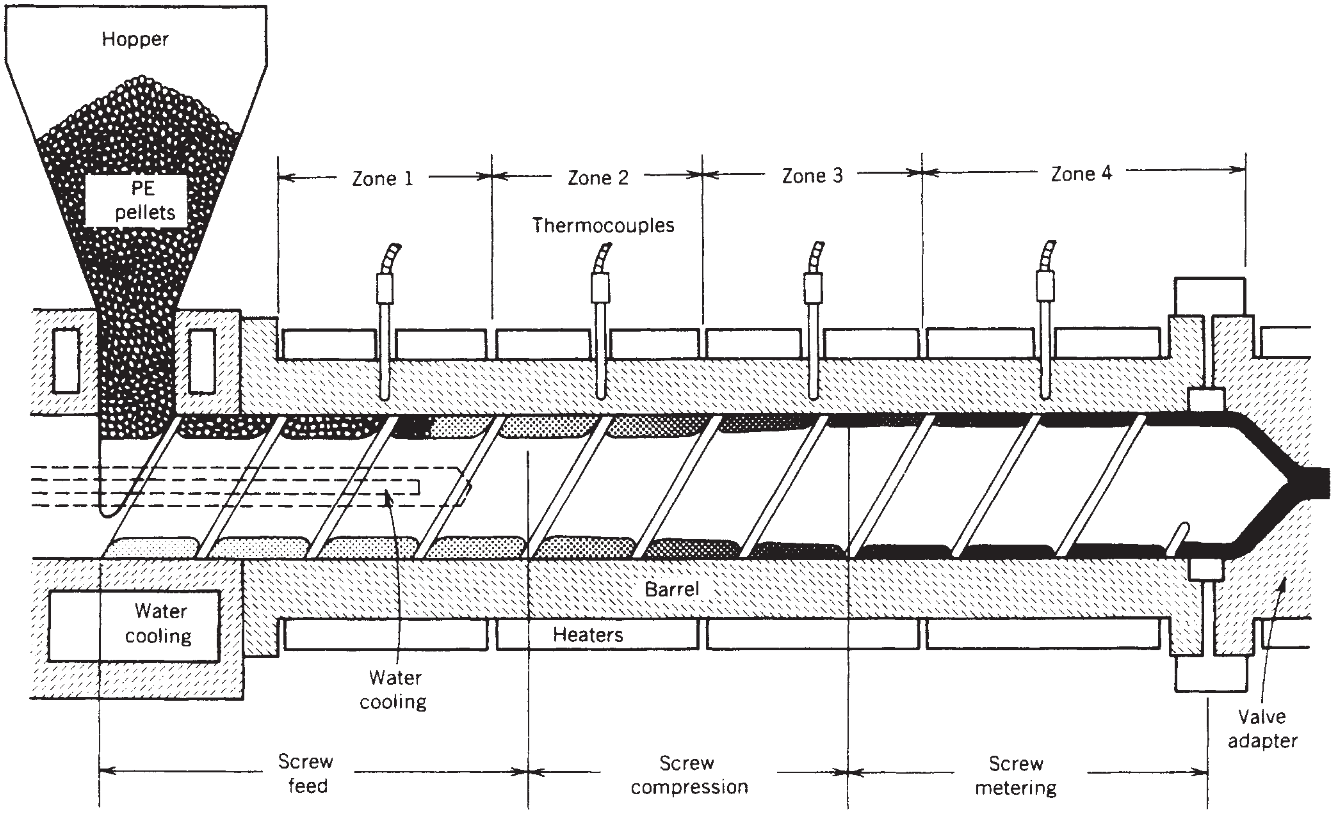

Figure 4. Schematic of the interior of an extruder.

be set at a desired temperature. The zones are controlled by instruments or by microprocessors. Thermocouples are normally used to sense temperature and to signal the action of the controller (see Instrumentation).

The drive mechanism consists of a motor and a gear reducer. The motor is usually a variable-speed dc drive system with the ability to run a speed range of slow to fast in a ratio of approximately 1:20. The gear reducer is used to lower the speed of the motor output shaft (e.g., 1750–2000 rpm top speed) to the desired screw rotation speed. Most extruders operate in a variable screw speed range of up to 200 rpm, but speeds considerably lower are used with certain polymers, especially on very large machines. The screw rotation speed depends on the diameter of the extruder, the polymer to be extruded, and the production rate desired. The limiting factor in a given-size extruder is quality of the product, which is dependent on the melt quality. As screw speed increases and more rate is achieved, the melt quality deteriorates because of nonuniform mixing or excessive temperatures, or because of degradation of the polymer from excessive heat generated by high shear.

COMPOUNDING

Extrusion compounding as it relates to packaging consists of preparing polymers for use in specific product applications. Mixtures of polymers, filled polymers, pigmented polymers, and a host of other polymer additives constitute a huge market. Compounding with a single-screw extruder consists of mixing and dispersing one or more minor constituents (e.g., pigments, stabilizers) into a major constituent, a polymer. The product of a compounding line is pellets. These are used by the converting industry. Converting is the process of melting the pellets and producing extruded sheet, film, injection-molded parts, and so on.

Compounding can be separated by functions: resin-plant extruding, blending, reclaim, and devolatization.

Resin-plant extruders take the products from a polymerization operation and make pellets. The feed to these machines can be powder, granules, other irregular shapes, or even a melt. A melt extruder has a molten feedstock and only generates pressure, whereas a plasticating extruder has the job of turning solids into a molten mass and then generating pressure. During pelletizing, stabilizers and processing aids are combined with the polymer (see Additives, plastic).

A blending extruder is used to mix feedstocks of compatible polymers, or different viscosities of the same polymer. The blending operation tailors the physical properties to meet a specific end use.

Reclamation

Reclamation of polymers is an important segment of the plastics industry. Film producers are satisfying sustainability calls and reducing costs by replacing virgin plastic with reclaim. Edge trimming is necessary when it comes to cast films. The trims are recycled by means of a special extruder, fed back in-line, and used for the encapsulation of the film edges. For blown film, recycled material can be used in the center layer of the film structure, and virgin layers prevent recycled material from contacting packaged food. Edge encapsulation prevents barrier material from making it to the edge of the film, which would preclude that scap from reintoduction (5).

The problems of reclamatiom are numerous because the feedstock for the extruder comes in many sizes and shapes. Some examples are polypropylene battery cases, polyester X-ray film, soft-drink bottles, bread wrappers, unusable foam products, fibers, filaments, and off-grade film of all kinds. Specially designed extruders must be used for processing these materials.

Some polymers require extraction of moisture or gases from the melt before a satisfactory product can be produced from the die. To accomplish this, a vent hole with vacuum pump is introduced along the extruder barrel, and the screw is specially designed. Devolatizing extruders are used where residual monomer, water, or other unwanted materials must be removed from the extrudate.

The machinery required for the aforementioned processes must be specifically designed for the application. A wide variety of design features are utilized.

Specially designed extruders are used for the addition of short fibers to thermoplastic polymers (6). This is done to improve the physical, mechanical, and structural properties of the virgin plastic. Cost-per-unit volume can also be improved. The extruder uses a three-stage screw. The polymer is melted in the first stage. The short fiber, usually chopped fiberglass, is screw conveyed into the side of the extruder barrel. The glass and polymer are mixed in the second stage. The third stage allows venting and pressure generation for the die at the exit. A cross-sectional view of a side-fed extrusion system is shown in Figure 5.

Another unique design is used for reclaiming. Because the bulk density of most of the scrap-plastic items is low, use of a dual-diameter extruder has become prevalent. The feed end of the screw has a larger diameter, so there is a greater volume for the entering light fluffy feedstock. This facilitates high production rates.

Vertical extruders meet special needs such as limited floor space, or other plant layout requirements.

BLOWN AND CAST FILM

Film is a relatively thin [usually $\leqslant 10$ mil ($\leqslant 254\,\mu$m)] flexible web made from one or more polymers, either blended or coextruded (see Coextrusion, flat; Coextrusion, tubular) but not to be confused with a fabricated extrusion-coated or laminated web (see Laminating; Multilayer flexible packaging).

Films are used in flexible packaging (for overwraps, bags) as industrial wraps (stretch and shrink films), in medical and health care products (disposable diapers, backings, hospital bed liners), in agriculture (mulch films), for sacks (drum liners, garbage bags), and as laminates (aseptic container stock). (Some packaging overwrap films are produced by casting a solvent solution of PVC resin on a stainless steel belt and evaporating the solvent as the belt

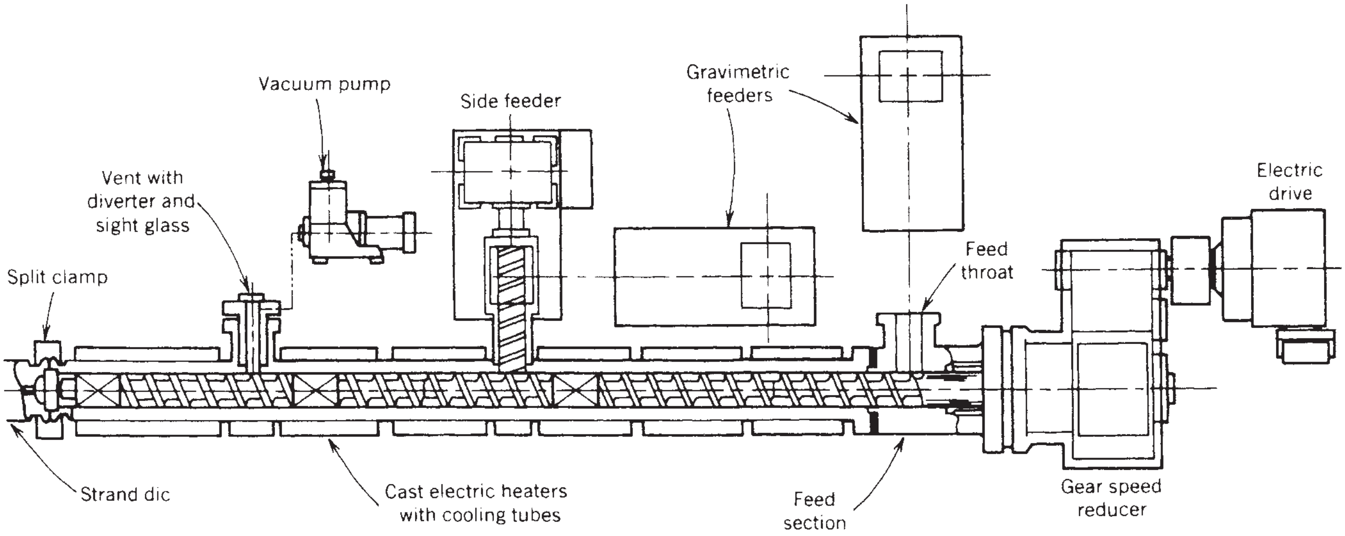

Figure 5. Cross section of a side-fed extrusion system.

travels through a heated chamber. This process normally uses a pump to distribute the solution through the die. Solvent casting is beyond the scope of this discussion.)

The same basic extrusion processes are used for producing both blown and cast film. The first two steps, melting and metering, are part of the extrusion process described above.

Forming

In the forming process, the polymer is squeezed through a die as it leaves the extruder, to form a thin uniform web. The cast-film process produces a flat web. In the blown-film process the die shapes the polymer into a tube. This latter process is more versatile because it can produce not only tubular products (bags), but flat film as well, simply by slitting open the tube. Key to the success of both processes is the die, which must distribute the polymer uniformly.

Orientation

In the orienting stage of the blown-film process, the tube is blown up into a bubble that thins out, or “draws down” the relatively thick tube to the required product gauge (thickness). In certain blown-film processes, the polymer is blown downward to produce films with special properties. The ratio of the diameter of the blown bubble to the diameter of the die is called the *blowup ratio*. Most LDPE (see Polyethylene, low density)-blown films used in packaging are made using blowup ratios of 2.0:1–2.5:1. The blowup ratio is changed depending on the characteristics of the resin being extruded and the properties desired in the film. In cast film, the molten polymer is also drawn down to the desired finished gauge. Drawdown ratios between 20:1 and 40:1 are typical. (If a polymer exits a die at 40 mils (1 mm) thick and finishes up 1 mil (25 μm) thick, the overall drawdown ratio is 40:1.) In the orientation process the long molecules of the polymer line up in the stretching direction, which improves the film’s strength in that direction. A key difference between the two filmmaking methods lies in the manner of orientation.

Because both edges are free in cast film, it is drawn down only in the direction the material exits the die (machine direction). Because cast film is drawn in one direction only, it usually exhibits excellent physical properties in the machine direction, and poor properties in the cross-machine direction. The cast-film process is shown in Figure 6. In the blown-film process, the extruded tube is stretched in two directions: as it is blown into a bubble and as it is drawn from the die in the machine direction by the adjustable speed drive system. This results in strength properties that are more uniform and can be balanced depending on the blowup ratio and the takeoff speed. Figure 7 illustrates the blown-film process.

Certain films can be biaxially oriented to enhance properties for specific packaging uses such as shrink films (see Films, shrink) or overwrap. The blown process produces a thick tube that is then reheated and blown out while increasing the take-away speed to maximize orientation in both directions. The cast process extrudes a thick, flat sheet that is chilled, then reheated and stretched in the machine direction and then reheated and stretched across its width by means of a tenter frame. The most common plastic materials to be biaxially oriented are polystyrene (see Polystyrene), homopolymers and copolymers of polypropylene, usually coextruded (see Film, oriented polypropylene); and polyester (see Film, oriented polyester). These films are then coated to enhance heat-seal or barrier properties.

Quenching

After the polymer has been extruded, it must be solidified into finished film. In blown film the quenching (or cooling) process is achieved by convection, by blowing air on the outside and sometimes on the inside of the bubble. Air rings at the die exit direct and distribute air uniformly to the bubble. In cast film the web leaves the die and is

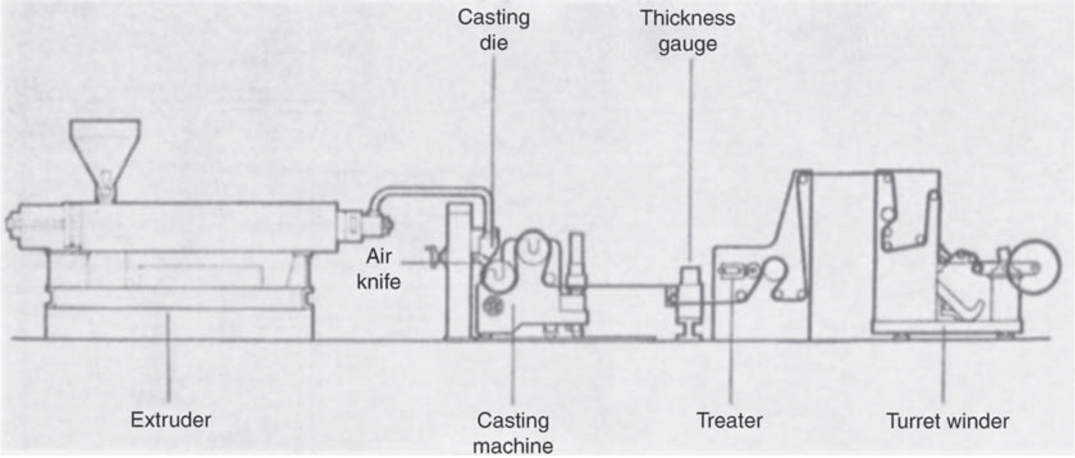

Figure 6. Cast-film line.

deposited on the surface of a driven cooled roll. There are usually several rolls in series (normally called "chill rolls"), arranged to cool the polymer by conduction, or direct contact.

Conduction cooling is quicker than convection cooling, and this has an effect on the clarity of the film. Because convection cooling (quenching of blown films) is relatively slow, more and larger crystals form in the film, as compared to those formed in the casting method. Because interfaces between crystals scatter light, blown film tends to be more hazy than cast film. This "haze factor" normally rules out use of blown film where clarity is very important, such as food overwrap applications. Because conduction cooling is more uniform and rapid than convection cooling, cast film has less gauge variation than blown film. This superior flatness means the film can be handled better in subsequent converting operations such as multicolor printing and laminating. These operations are performed at high speeds and cast film is preferred to minimize scrap.

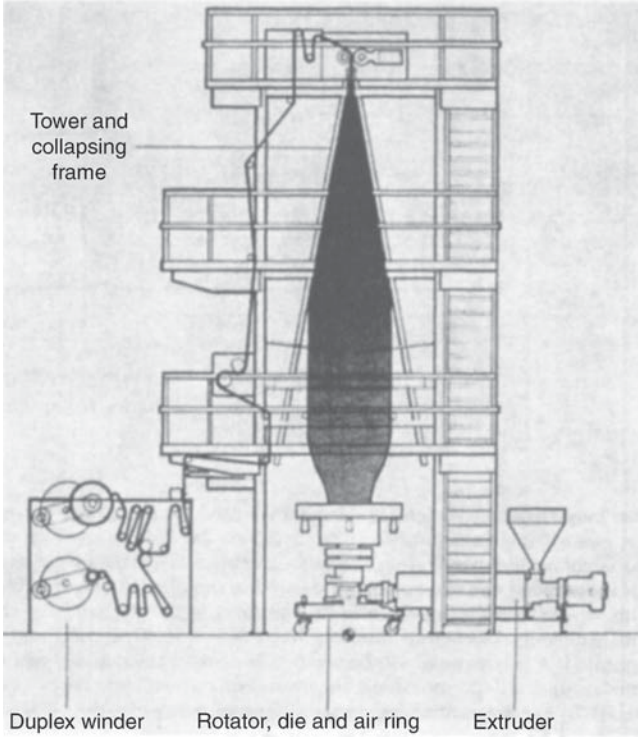

Figure 7. Blown-film line.

Gauge Randomization

In practice, perfectly flat film cannot be made, due to die geometry and machine tool constraints. Blown-film thickness variations of ±7% and cast-film thickness variations of ±3% are typical. Variations in thickness are frequently evidenced by gauge bands. If relatively small variations become significant at the film winder or at a later converting process (printing, laminating), adjustments must be made to distribute them. In the blown method, variations in the film are usually randomized by rotating or oscillating the die to distribute the gauge variations over the finished web. In cast film, because a flat web with two free edges is produced, the downstream winder with edge trim slitters is normally oscillated across the film, winding only a portion of the cast web (see Slitting and rewinding). This generates waste film that must be recycled or scrapped.

It is common to measure sheet and flat-film thickness automatically after the die, compute and average thickness, and use the signal to control screw speed and thus control thickness in the linear direction. Special casting and sheet dies that operate in conjunction with a computer and a thickness-measuring gauge automatically control the film thickness across the width of the die as well.

Wider lines and thinner layers are the current interest in film extrusion. Dies are becoming wider and layers are shrinking as film extruders look to optimize properties and output as economically as possible. Extrusion Dies Industries (EDI) report that 3.1 m dies have grown to 4.7 m and even 5.3 m. It is hoped that cast prolypropylene films could then compete with biaxially oriented polypropylene (BOPP). For the clarity that is achieved with BOPP, the film used must be quenched rapidly. This is achieved by running the chill roll slowly. At EDI, the Multiplier feed block makes films with hundreds of layers possible. Kiefel says customers are looking past dies to its Perfect Cool system in order to produce more layers. Most of the bulk equipment used at present is still three layers (5).

RIGID SHEET EXTRUSION

Film thicker than 0.010 in. (0.25 mm) is normally defined as sheet (see Films, plastic). It is thermoformed (see Thermoforming) into objects that hold their shape, a property that film does not possess. Extruded sheet is thermoformed into cups, lids, containers, packaging blisters, automotive panels, signs, and windows. The machinery required for the manufacture of sheet usually extrudes the polymer horizontally into a nip formed by two hardened cooling rolls that define the final product thickness and surface. Additional rolls and a conveyor for more cooling and pull rolls and a winder or shear complete the sheet extrusion line (see Figure 8). The extruder is often vented to remove low levels of moisture from polystyrene and ABS. Sheet is traditionally extruded horizontally from a die similar to a flat-film die, but with specially designed interior flow surfaces to suit the particular polymer. Restrictor bars are usually used for added gauge uniformity (see Figure 9). Sheet dies are often more massive, to minimize distortion.

The takeoff unit for extrusion of sheet usually consists of a cooling and polishing unit (C & P unit) having three driven, highly polished, chrome-plated rolls; a roller conveyor; and a pair of driven rubber-covered pulloff rolls. The C & P unit serves three functions: cooling, polishing, and gauge control. In some cases, one or two of the chrome-plated rolls are embossed to yield a sheet with specific surface qualities. Roll diameter is contingent on the output of the extruder, the linear speed of the equipment, and the level of heat transfer required. High-capacity multiple-zone temperature control units are often built into the C & P unit, which must be of rugged construction to eliminate vibration. Sheets up to approximately 0.050 in. (1.3 mm) thick can be wound onto rolls; thicker sheet is cut to desired lengths. In some cases the sheet is pulled directly into a thermoforming machine, providing an in-line, pellet-to-part operation.

FOAM SHEET EXTRUSION

Extruded polystyrene foam (see Foam, extruded polystyrene) sheet material used for making egg cartons, meat and vegetables trays for fast-food packaging, and similar applications continues to find new uses, ranging from decorated picnic ware to coated and laminated sheets. Polyolefin foams are used for packaging materials (see Foam cushioning), insulation, and wire coverings. Most of the world's extruded foam is produced on tandem-extrusion equipment. Although the extrusion process is relatively straightforward, special equipment and controls are needed.

The first extruder has a long barrel and is used to mix a nucleating agent uniformly throughout the melt of a base polymer. The nucleator, typically a selected filler, controls foam cell quality. In effect, it creates imperfections in the polymer melt, forming nucleation centers for cells to originate.

About two-thirds down the primary extruder barrel, the gas blowing agent is introduced. At this point the melt is homogeneous and at a pressure of 3500–4000 psi (24.1–27.6 MPa). Fluorocarbons are the usual agents, often blended with hydrocarbons, such as butane or isopentane, to reduce costs (6). Carbon dioxide blended up to 35% with either fluorocarbons or hydrocarbons reduces material costs still further.

The product mix is fed through a screen changer for filtering. Then the mix, still under pressure, is fed into a larger extruder that cools and discharges the product under conditions to allow extrusion through the annular die. This is achieved through use of a low-speed screw rotating in a barrel cooled by high flow rates of water. Foaming occurs only outside the die lips.

The foamed tube is expanded to 3.5–4 times its diameter and extruded horizontally over an internal cooling and sizing mandrel that cools and orients the foam and supports the tube as it leaves the die. After the tube passes

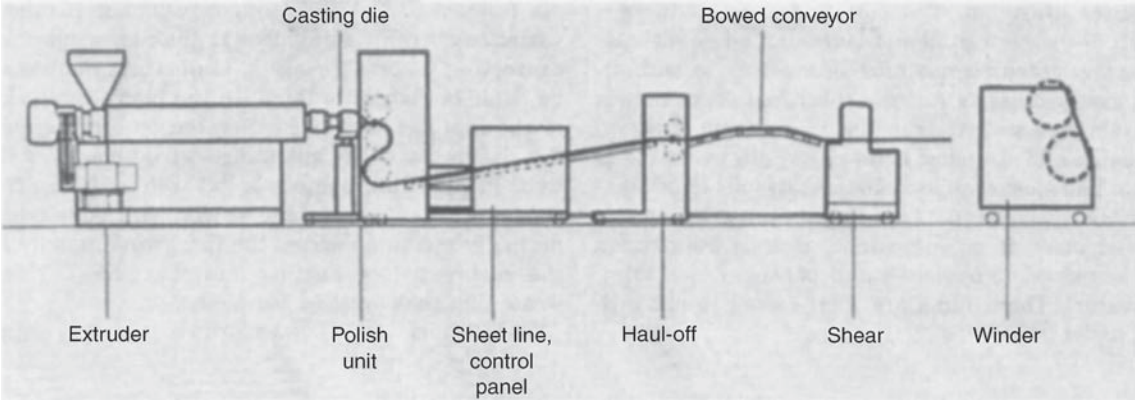

Figure 8. Sheet line.

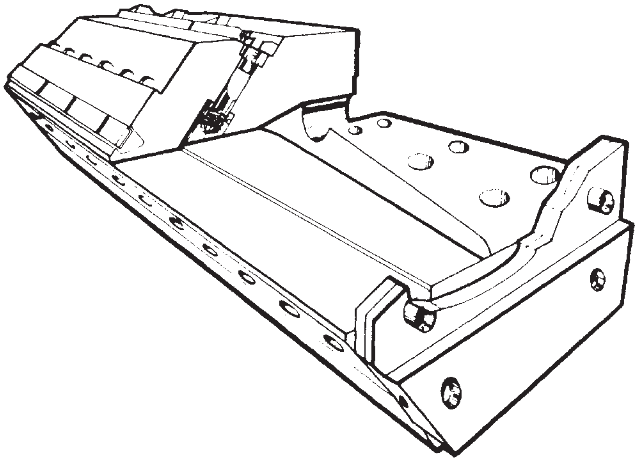

Figure 9. Cutaway of sheet die with restrictor.

along the mandrel and a slitting unit, the two webs are pulled through nip rolls. From the nip rolls the webs are wound on either dual-spindle turret-type or cantilevered winders. Large-diameter reels are required to handle foam sheet.

Sheet weight per inch (or centimeter) is governed by the amount of blowing agent incorporated in the mix. Sheet thickness is determined by adjustment of the die lips and the take-off speed of the nip rolls. Sheet orientation is controlled by a combination of die gap, blow-up ratio, and line speed.

Accurate metering equipment is needed for a good finished product. The blowing agent system calls for sophisticated controls to safely handle high-pressure gas products on the production line. The difficulties of operating a two-extruder system have been reduced through the use of microprocessors that automatically monitor and control a multitude of functions on the extrusion line.

BIBLIOGRAPHY

J. A. Gibbons, "Extrusion" in M. Bakker, ed., *The Wiley Encyclopedia of Packaging Technology*, 1st edition, John Wiley & Sons, New York, pp. 282–289; 2nd edition, A. J. Brody and K. S. Marsh, eds., pp. 370–378.

Cited Publications

1. C. Rauwendall, "Extrusion" in *The Mark Encyclopedia of Polymer Seience and Technology,* 2nd edition, John Wiley & Sons, Hoboken, NJ, 2003.
2. M. Gray, British Patent 5056 (1879).
3. V. Royle and J. Royle, Jr., U.S. Patent 325,360 (1885).
4. Z. Tadmor and I. Klein, *Engineering Principles of Plasticating Extrusion*, Reinhold, New York, 1970.
5. T. Deliglio, "Processing Technology, Extrusion," *Modern Plastics Worldwide*, 28–36 (September 2008).
6. M. Xanthos and D. B. Todd, "Plastics Processing" in *The Kirk–Othmer Encyclopedia of Chemical Technology*, Vol. 19, John Wiley & Sons, Hoboken, NJ, 2006, p. 549.

EXTRUSION COATING

Michael G. Alsdorf
Extrusion Group, Egan Machinery

Updated by Staff

INTRODUCTION

Extrusion coating is a process in which an extruder forces melted thermoplastic through a horizontal slot die onto a moving web of material. The rate of application controls the thickness of the continuous film deposited on the paper, board, film, or foil. The melt stream, extruded in one or several layers, can be used as a coating or as an adhesive to sandwich two webs together.

Equipment for extrusion coating and laminating lines is normally associated with product groups, with some overlapping between groups. Substrates or web handling characteristics distinguish the difference among plastic films, paper, and paperboard combinations.

Three types of lines for extrusion coating and laminating are thin-film or low tension applications at operating web tension levels of 8–80 lbf (35.6–356 N), paper and its combinations in the middle range of 20–200 lbf (89–887 N), and high tension for paperboard applications at 150–1500 lbf (667–6672 N).

In extrusion laminating, a film of molten polymer is deposited between two moving webs in a nip created by a rubber pressure roll and a chrome-plated steel chill roll. In this continuous operation, rolls of material are unwound, new rolls are automatically spliced on the fly, and the surface of the substrate is prepared by chemical priming or other surface treatment to make it receptive to the extrusion coating and to help develop adhesion between the two materials (see Figure 1).

Pressure and temperature on the web and extrudate combine to produce adhesion. The substrate normally provides the mechanical strength to the resultant structure, and the polymer provides a gas, moisture, or grease barrier.

As materials, especially for food packaging, become more complex with ever-increasing performance standards, coating lines become more complicated. The requirements for new extrusion coating lines are high productivity, extreme flexibility, and labor-saving computerized and robotized equipment. Modern extrusion coating lines must be able to process the speciality resins that offer greater adhesion, allowing line speeds to be increased. The most common coating resins used is low-density polyethylene, but extends to ethylene–vinyl acetate, ethylene–acrylic acid, polypropylene, high-density polyethylene, and ionomers (1).

APPLICATIONS

Products from extrusion coating/laminating lines have six main market classifications: liquid packaging, flexible

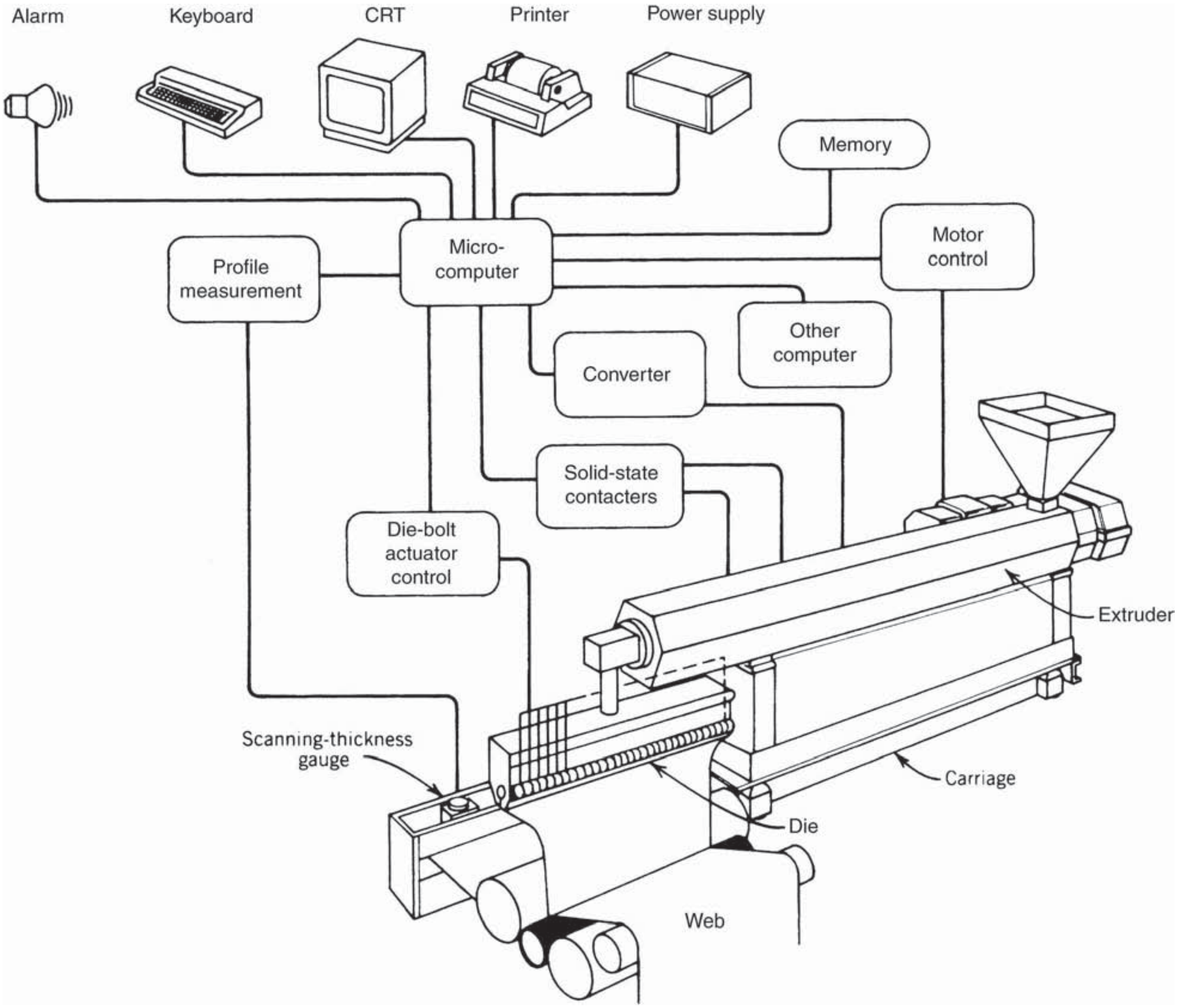

Figure 1. Simple extrusion-coating line.

packaging, board packaging, industrial wraps, industrial products, and sacks.

Liquid Packaging

Liquid packaging utilizes a single web-coated lightweight board, or a combination of board, plastic, and aluminum foil, for semirigid containers for milk, juices, water, oils, processed foods, sauces, cheese products, and aseptic packaging of liquids. The polyethylene-coated milk carton was largely responsible for the emergence of the extrusion coating industry in the 1960s, and as more commercial uses were found for polyethylene-coated materials, the industry grew rapidly (see Polyethylene; Cartons, gabletop).

In the 1980s, aseptic packaging made strong inroads in replacing traditional metal and glass containers (see Aseptic packaging). The sterile flexible “paper bottle,” which extends the shelf life of dairy products for months without refrigeration, is a major alternative form of packaging (2) (see Shelf life). It is also used to package fruit juices.

Although aseptic packaging systems differ, most of them use paperboard–foil–plastic composite material that is formed to shape, sterilized, and filled with a sterile liquid or semiliquid product under the sterile conditions. Customized extrusion-coating lines, complete with in-line laminating stations, are used to produce an almost unlimited variety of shapes, sizes, and printing options for aseptic and other packaging materials.

Flexible Packaging

The flexible packaging classification covers the combination of plain, printed, or metallized films, papers, polymers, and foil, used for protection, unitizing, dispensing, or holding of commodities. These include medicine and pharmaceutical supplies, foods, chemicals, hardware,

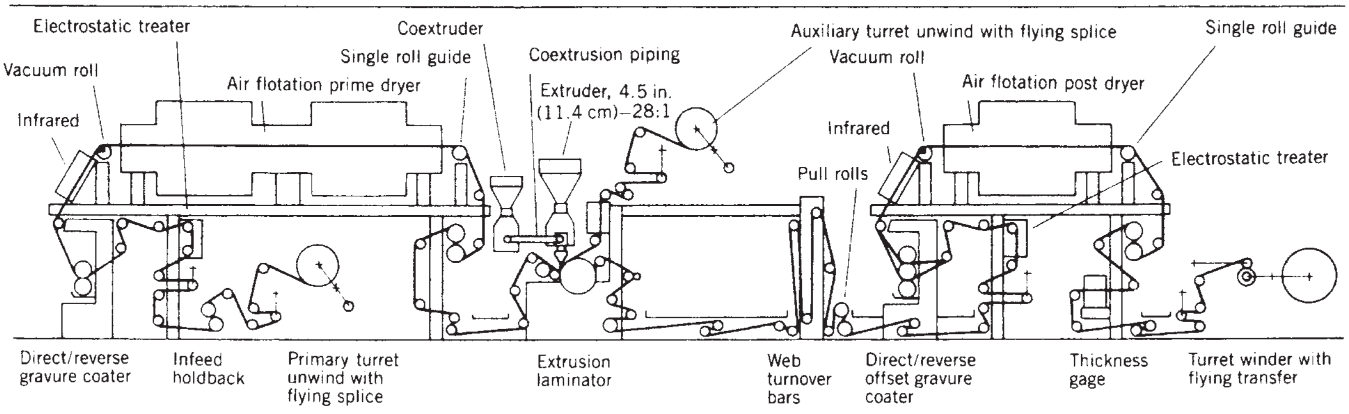

Figure 2. High-speed extrusion-coating line used to produce flexible packaging-type materials.

liquids, notions, sterile products, and meats. Flexible packages also include wrappers for fast food, the bag for “bag-in-box” containers, and the multilaminated web for Glaminate tube packaging (3) (see Bag-in-box, dry; Bag-in-box, liquid; Tubes, collapsible; Multilayer flexible packaging).

Flexible packaging lines are processing progressively thinner substrates of polyester, oriented polypropylene, and metalized materials (see Film, polyester; Film, oriented polypropylene; Metallizing). The light-gauge preprinted substrates used for snack foods require minimum tension to ensure that preprinted webs are not distorted. Machines to create these new structures are becoming increasingly complex. Thinner coating layers are more difficult to extrude on the coating machine, and often the coating head itself must be engineered to handle a variety of coating materials (see Figure 2).

Flotation drying, using air on both sides to float the web, is widely used in flexible package manufacturing because it handles light films well. Improved drying efficiency compared with roll-support dryers allows higher line speeds.

Board Packaging

In board packaging, heavyweight boards are coated, laminated, and then formed into boxes (folding cartons) for packaging detergents, tobacco, liquor, frozen foods, and bakery products (see Cartons, folding). Microwaveable and radiant oven trays (4) and ice cream cartons are also in this category. The plastic-coated containers protect against grease, moisture, and gas. Release characteristics can also be provided.

Industrial Wraps

Industrial wraps cover the range of heavy or reinforced papers, films, or boards used for products in which the extrusion-coated material may be added to other media used for products such as composite cans, drum liners, soap wrappers, and sheet overwraps for a variety of baled materials (see Cans, composite). The coated product is not necessarily used as a unit container, but as a wrapper or part of a protective structure.

Industrial Products

The industrial products classification takes in extrusion-coated or laminated material serving various industry requirements. Products include photographic-base papers, substitutes for bitumen coatings, base papers for silicone coatings, insulation backing, automative carpet coating, and metallized film balloons. Also in this category are functional laminates like credit cards and printed circuit boards, decorative laminates such as wallpaper, and disposables like tablecloths and various hospital and surgical supplies. As with industrial wraps, these products may or may not be associated with packaging.

Sacks

Sacks cover materials for multiwall paper bags and plastic-coated raffia. Intermediate tension lines produce coated scrim that is woven from tapes of oriented polyethylene or polypropylene. These materials are used for heavy-duty sacks and tarpaulins; and they have applications in building, recreational, and agricultural areas (see Bags, paper; Bags, heavy-duty plastic).

A miscellaneous classification would include coated foam used in the fast-food industry.

MACHINERY

Obviously, no single coating line can produce all the foregoing products. Today, various types of machinery are manufactured to produce coated and laminated products using substrates ranging from 0.4-mil (10-µm) film to 246 lb/3000 ft^2 (400 g/m^2) board, with coating weights 4.3–49 lb/3000 ft^2 (7–80 g/m^2), at widths 76.2–787 mil (300–3100 µm), and at speeds 1.1–33 ft/s (0.33–10 m/s).

The most important consideration in web processing or web handling equipment is the determination of the practical range for the system—the maximum and minimum unwind and winder roll diameters, maximum and minimum web-tension forces, splicing speeds, core diameters, and other process needs.

The unwind basically takes material in roll form and processes it continuously over a series of idler or driven rolls with a suitable amount of tension in order to minimize wrinkling yet not produce deformation. A dancer or transducer roll can be used for tension control; DC regenerative drives and electric or pneumatic brakes are used where applicable. Similar considerations apply to the infeed holdback when levels of tension required differ from those of the in-line operations. These sections tend to isolate tension transients from the unwinding roll.

Electrostatic treatment and flame treatment are available for enhancing surface tension or wettability conditions of the inert substrates prior to applying aqueous solutions (1). The direct/reverse gravure coater can be used for either priming, coating, or printing. Chemical priming is used mostly in flexible-packaging lines to promote adhesion between the extrudate and substrates such as cellophane, polyester, ionomer, nylon, or polyolefin films (see Film articles). Infrared preheating and vacuum rolls provide the means to dry the PVDC-coated web and effect proper web handling.

Air-flotation, driven-roll, idler-roll, or drum-support dryers are selected depending on the strength, support, or tension required for the substrates. Recirculation of heated air in the dryers is a common energy conservation practice in all these dryers. The single-roll web guide at the dryer exit and chill or pull rolls are needed for special web processing requirements.

The extrusion laminator along with the extruder-and-die system is the heart of the process. The backup chill roll, rubber roll, and large-diameter chill roll form a three-roll system. Two-roll laminators can be used for heavy substrates or paper-board applications. As the moving web enters the nip section, it is coated, laminated, or both. Ozone in close proximity to the entering web is used for oxidation of the molten polymer for improved adhesion in high bond level applications. Most of the heat is removed from the coating or laminate by the chrome-plated chill rolls. Chill rolls normally are steel and are constructed with a double-shell arrangement and spirally baffled. Outer shells of aluminum have been used for high coating weights. High-velocity chilled water is circulated to maintain a temperature rise between inlet and outlet of 2–4°F (1–2°C).

The coated or laminated structure is normally edge-trimmed at the laminator by razor, score, or shear cutting. Trim removal systems are installed just after the laminator. Slitting can also be done just prior to winding at a turret or single-drum winder.

Auxiliary unwinds can be located on, near, or over the extrusion laminator to provide a secondary substrate for laminating at the nip where the extrudate acts as an adhesive. These unwinds can consist of single-position or turret assemblies with flying splices for aluminum foil, oriented polypropylene or polyester film, paper, or paperboard substrates.

Web turnover systems, pull rolls, coaters, infrared heating, dryers, and web processing steps after the extrusion laminator are designed according to product needs. Thickness measuring devices include infrared and scanning of clear webs.

There are two basic winding techniques. The turret winder or center wind system is used for most flexible packaging materials. Tension is controlled by a dancer or transducer roll. The same design criteria for unwinds also applies to winders. The type of web, operating speed, tension range, and roll buildup must be properly controlled to wind up a satisfactory roll. Paper and paperboard products can be wound by surface methods on a single-drum winder.

All-plastic constructions require more advanced web controls. Many converters utilizing traditional wood cellulose substrates are specifying that their new coating lines must be able to handle all-plastic films. Wider tension ranges and air flotation dryers are two principal requirements of these convertible systems.

Other features being incorporated into various lines include DC-regenerative unwinds and infeed holdback drives for prices and low-level tension, direct/reverse gravure coaters for aqueous PVDC coating, infrared preheating, and vacuum rolls for web controls.

In the production of photographic-base papers, exacting specifications and special criteria for pigmented polymers are needed to produce coated materials that constantly provide high-quality photographs. The concept of tandem operations or coating two sides of a substrate in one pass can be applied to many flexible-packaging lines that produce combinations of paper, extrusion lamination to aluminum foil, and extrusion coating a polymer for heat sealing. Higher-operating line tensions can be used in producing structures with paper for granulated or powdered mixes and freezer-wrap or sugar-pouch materials. Polyethylene is not the only resin used for lamination or coating. Polypropylene, ionomer, nylon, ethylene–acrylic acid (EAA), ethylene–methacrylic acid (EMA), and ethylene–vinyl acetate (EVA) can also be part of a converter's inventory of resins.

Single-unit pilot coating lines feature an entire coating system preassembled and prewired at the factory and mounted on a structural steel base. These lines can be completely enclosed and have applications for the development of products such as the retort pouch, aseptic packaging, vacuum packaging, and other extended shelf-life products used to replace conventional glass and metal-can packages; they can also be used in the development of many types of medical-grade extrusion coatings (3).

Stainless steel is used when extreme cleanliness is required. The "cleanroom" machines are designed so that any metallic particles generated by machine friction are either contained or swept away by laminar air flow. Stainless steel is also used when lines are frequently washed with solvents that could remove conventional paint.

A typical pilot coating line consists of an unwind, coating heat, air-flotation dryer, dryer exit tension control, cooling station, extrusion coater, and rewinder, all aligned on a one-piece steel frame. Pilot coating lines are designed to handle narrow web widths and can be built so that components are cantilevered instead of being supported by traditional side-frames. The spindles, idler rolls, force transducers, and air-flotation bars are all mounted on a vertical backplate.

Extrusion-coating lines are experiencing increased automation. Raw material and roll stock can now be selected from a controlled inventory, delivered to the line, and handled through robotics (see Robots). The entire operation can be monitored and controlled by computer (see Instrumentation/controls).

Drives are under computer process control, and there have been advances in digital drives and in energy-efficient AC inverters. While a number of different drive systems have been installed and operated, the multimotor DC system is predominantly used for extrusion coating equipment. These drives can consist of as many as 10 motors in one line with a single control to bring the web up to operating speed. The tandem follower is another drive or computer feature whereby the extruder will increase or decrease in rate with line speed in order to maintain a fixed coating weight as the line speed is changed.

BIBLIOGRAPHY

Michael G. Alsdorf, “Extrusion Coating” in *The Wiley Encyclopedia of Packaging Technology*, 1st edition, John Wiley & Sons, New York, 1986, pp. 289–293; 2nd edition, 1997, pp. 378–381.

Cited Publications

1. R. J. Ashley, “Extrusion Coating” in D. E. Packham, ed., *The Handbook of Adhesion,* John Wiley & Sons, Chichester, UK, 2005.
2. J. G. Brennan and B. P. F. Day, “Packaging” in J. G. Brennan, ed., *Food Processing Handbook,* Wiley-VCH, Weinheim, Germany, 2006.
3. M. Schlack, “Extrusion Coaters Gear for New Packaging Action,” *Plast. World*, 42 (July 1984).
4. M. J. Kirwan, “Folding Cartons” in M. J. Kirwan, ed., *Paper and Paperboard Packaging Technology,* Blackwell Publishing, London, 2005.

F

FILLING MACHINERY, BY COUNT

Accurate measuring is imperative in packaging to avoid costly overage and shortages that are now prohibited by law. As a basis for measurement, most packaging lines use either the weight of the package (see Checkweighing) or the number of pieces in the package. This article pertains to methods used to produce packaging that contain a specified number of pieces. Modern automatic counting systems are based on concepts that evolved in ancient times. They all are encompassed three basic functions that are as follows: parts representation, parts detection, and product handling.

PARTS REPRESENTATION

Counting is used to determine the amount of a specified batch and the method used to achieve this begins by selecting a basic system of representation. Systems of representation are used in all forms of counting. Units can be represented by fingers and toes, knots in a rope, or as in the packaging industry, they can be pulses of electrical current generated from specially designed detection units. Over the years, humans have engineered quick and accurate ways of counting, but no method is as accurate as a single-file count of an individual unit of product.

PARTS DETECTION

The next step in counting is detecting the unit of product to be counted. A person detects the product either by sight or by touch. Machines are designed to operate on the same principles and use either optical systems (sight) or nonoptical systems (touch).

Optical Systems. An optical system operates much like a human eye. A photosensitive receiving device is established, and the unit of product to be counted is passed within detection distance of it. There are many models of optical systems used in packaging, but most are based on either a simple digital photocell system or an intricate electronic analog detection unit.

In the photocell system, the breaking of a light beam fed to the photocell receiver indicates that a unit of product has passed through the detection zone. The break is then recorded as the counting of one unit of product. This method of detection is perfect for most product applications that meet specifications for light-blocking systems, but it is limited by the fact that the light source fed to the receiver must be completely blocked out before detection is recognized. This method is not efficient with transparent, overlapping, or bicircular objects (such as clear plastic), two pieces of material riding on top of each other, or objects with holes, which may trigger the photocell more than once.

Another approach to optical detection is the analog photo-optic system. This system is fast, flexible, and accurate, because certain parameters must be established and met before detection is recorded. The Photo Optic Shadow Detector (Sigma Systems, Inc.), for example, detects the dimensions of a specified shadow made by the unit of product when fed through the detection zone. Each shadow of a detected unit must meet certain parameters before being recorded. The parameters can be entered into the computer portion of the counting system to compensate for objects such as flat washers and O rings, which would trigger a photocell system twice, or clear plastic, which would not block out a light source but would cast a shadow that could be detected.

Nonoptical Systems. The nonoptical methods of parts detection are similar to human touch. The touch methods generally involve escapement devices, electrical contact, or magnetic-field contact. The escapement device is usually fully mechanical and is similar to an analog machine. Each unit of product must be of a specific shape and size. The product is fed into a receiving device that fits those exact parameters and then is discharged and recorded as a specific unit of product. This process is equivalent to placing dominoes in a box made just for dominoes. If only ten dominoes fit, then the unit of product would be recorded as ten units. This system is accurate, but it offers little flexibility. It commonly is used for high-speed counting of uniform products such as pills and tablets.

Another nonoptical method is the electrical-contact method, in which an electrical switch is triggered each time a part comes in contact with the switch. The part is then recorded as one unit of product. The response time and the ability of the product to actuate the mechanical switch-triggering device greatly affects the accuracy and flexibility of this type of system. The *magnetic system* is another touch-system method. Each unit of product to be counted must come in contact with or disturb the magnetic flow being transmitted from a magnetic source. As each unit of product is fed through the magnetic field, it is recorded as a counted unit.

Coupled with the detection system is a process known as *discrimination* (e.g., a farmer counting cows knows how to exclude sheep). This process has hampered the automated counting system greatly, because once this vital function leaves the dependability of the human senses, accuracy often suffers. Only two of the detection systems mentioned earlier can discriminate and are as follows: the photo-optic-analog system and the escapement-device system. In both, certain parameters must be met before a unit of product is recorded; the other systems record any item that is detected. Engineers have been working for years to improve the efficiency of the detection system to ensure an accurate count.

PRODUCT HANDLING

In almost every counting system, the process of getting the product to the detection zone and then moving it away from the zone must be achieved, whether the detection zone goes to the product or the product comes to the zone. This system of product movement is known as product handling. The product is usually brought to the detection zone, and in packaging, all of the methods bring the product to the zone in single file. There are various ways to do this. One is vibratory feeding, which is designed to vibrate a track or bowl filled with product, which in turn causes the product to vibrate along a designated path or ramp. The tracks or ramps narrow as the product nears the detection zone in order to create a single file. These feeding systems are the most flexible, because most objects lend themselves to vibration.

Another method is the *belt* or *V-belt system*. The product is placed in a master container and discharged onto a belt system. The width of the belt track is narrowed to allow only one part to pass at a time to achieve single-file feeding. Product handling plays an important role in the counting process, because even the most refined counting system will be inaccurate if the product is not presented to the detection zone in a manner acceptable to the detection device.

Many approaches to product feeding exist, but most counting systems allow free entry and exit of product through the detection zone. In packaging, however, it is sometimes necessary to retain all or part of the amount counted for a specific function. The retention is known as accumulation or partial accumulation. The accumulation functions usually are determined or predetermined by a manual function, in which an accumulation parameter, i.e., the amount of product desired, is assigned to the counting unit. The counting unit usually must meet the assigned parameters before permitting the accumulation functions to discharge the retained product. This function is essential when a manufacturer wants to place a predetermined amount of product into a specific-size container, e.g., accumulating 20 tablets, then discharging them into a package or bottle. It also plays an important role in the packaging process, because most packaging machines are intermittently cycled by the signal received from the counting system when the accumulation function discharges product. Most containers are aligned under the accumulation chute to receive the allotted amount of product.

As electronic technology advances, the ability to count and discriminate parts will improve. However, the attainable operating speeds will depend on the speed with which the unit of product can be fed into the detection mechanism and the speed of the product-handling system. The performance of any counting system must be objectively evaluated on its ability to count accurately and its adaptation to the intended use.

BIBLIOGRAPHY

"Filling Machinery, by Count," in David Madison, ed., *The Wiley Encyclopedia of Packaging Technology*, 1st ed., by Sigma Systems, Inc., pp. 294–295.

FILLING MACHINERY, LIQUID, CARBONATED

The method for filling carbonated liquids (primarily beer and soft drinks) differs from other filling techniques (see Filling machinery, still liquid), because it is accomplished under pressure and uses the container as part of the control of net contents. Carbonated beverages, which tend to foam, require filling techniques that ensure the retention of the required carbonation levels in different sizes of cans and bottles. It is imperative that the carbonated liquid be processed in a way that prevents excess foaming, which would result in uncontrolled filling levels as well as impaired closing of the vessel.

The filling machine (filler) consists of a rotating bowl with a valve and CO_2 pressurization control, filling valves that attach to the perimeter of the bowl, a tabletop that contains the controlling technique for feeding in and taking away the container, a closing section that applies either a bottle closure or a can end, and a drive system that keeps all components in proper synchronization with each other.

The bowl must control the pressure on the liquid within it, yet be at a pressure lower than that of the system that feeds it. With this system, a continuous supply of product is assured with the least amount of turbulence. The level within the bowl is maintained by a simple float valve or similar device.

The filling valves embody the applied technology involved in filling carbonated products. Almost all of the machinery manufacturers of note employ the same principles with some variation in the mechanical interpretation of the concepts. To understand the valve's function, it is necessary to follow it through the various filling stages described in the following paragraphs.

The vessel is presented to the filling valve to ensure complete intimacy between both surfaces. This process is controlled by a pneumatic pressure system that holds the vessel firmly against the valve, yet tenderly enough to avoid crushing the thin metal cans or light plastic bottles.

The container rotates with the filler valve, and a mechanical trip actuates the valve to permit CO_2 from the upper part of the bowl (above the liquid level) to pressurize the container. The pressure in the container is now equal to or somewhat lower than the pressure in the bowl.

The valve is then actuated into the next stage, which permits the product to flow into the prepressurized container gravimetrically. During the filling phase (as fluid enters the vessel), it is essential that the CO_2 in the container be displaced. This displacement is accomplished through a vent tube, which is normally in the center of the valve and protruding downward into the vessel. As the product fills the vessel, it ultimately rises to seal off the vent tube or ball check. This stops the filling process because pressures in the bowl above and in the container below have reached an equilibrium.

Although the container is still in an intimate seal with the valve, another external latch actuates an internal chamber in the valve, which closes the connection to the bowl (both the liquid portion and the CO_2 charge above it) and simultaneously vents the container to atmosphere.

This step maintains control of the product in the container during the depressurizing step and assures that the product will be virtually foam-free when the container is removed from contact with the valve.

The tabletop, which employs an exit star wheel (not generally used on can fillers), sweeps away the lowered package from the rotating bowl and transfers it into the closing section at tabletop height. If the container is a can, then it is closed in the closing machine by an "end," which is rolled and seamed in place (see Can seamers) integrally with the can body with forces great enough to withstand high internal pressures. Bottles can be closed with a pryoff or twistoff crown; a rolled-on aluminum closure, which is threaded in place using the threaded portion of the bottle as a mandrel, or a prefabricated threaded closure applied by standard technique (see Capping machinery; Closures).

Carbon dioxide dissolves more readily in cold water than in hot water; thus, to keep foaming at a minimum and filling speeds at a maximum, it has been common to run beer and soft drinks as close to 32°F (0°C) as is practicable. To save the energy consumed by refrigeration, fillers have been introduced that operate at ambient temperatures. Controlling the CO_2 in the carbonating and filling stages means these operations must be accomplished at above-normal pressures, which complicates the internal parts of the filling valve and reduces rates of speed. The production rates of modern fillers have increased to approximately 2000 12-oz (355-mL) cpm and reportedly 1500 16-oz (473-mL) glass bpm. These increased rates of output are made possible by the use of programmable computers and new advanced instrumentation. Precise fill heights in the containers are controlled by the length of a vent tube in a bottle filler and ball check technique in a can filler. However, because of minor variations in the dimensions of glass and plastic bottles, more variability exists in volumetric content than in the exact volumetric measurement technique sometimes employed in "still" liquid filling.

BIBLIOGRAPHY

"Filling Machinery, Liquid, Carbonated" in W. R. Evans, ed., *The Wiley Encyclopedia of Packaging Technology*, 1st ed., by Coca-Cola Bottling of New York, p. 300.

FILLING MACHINERY, LIQUID, STILL

F. B. Fairbanks
Horix Manufacturing Company,
Pittsburgh, Pennsylvania

This article deals with the filling of noncarbonated liquids intended for packaging and distribution into rigid and semirigid preformed containers, such as glass bottles, sanitary cans, plastic bottles, and preformed paper cartons. Form/fill/seal packaging is not discussed (see the Form/fill/seal, horizontal; Form/fill/seal, vertical; Thermform/fill/seal articles), and the information relates only indirectly to such applications as the filling of paper cups in vending machines.

Table 1. Methods of Container Filling

Type of Container	Filling Method
Sealed container	Balanced pressure
	Gravity
	Gravity–vacuum
	Counterpressure
	Unbalanced pressure
	Vacuum
	Prevacuumizing
	Gravity
	Pressure
Unsealed container	Level sensing
	Piston volumetric
	Cylinder vertical, closed ends
	Cylinder vertical, open-end inlet
	Cylinder horizontal, single-ended
	Cylinder horizontal, double-ended
	Rolling-diaphragm volumetric
	Displacement-ram volumetric
	Volume cup
	Turbine-meter volumetric
	Positive-displacement-pump volumetric
	Peristaltic-pump volumetric
	Weight
	Gross weight
	Net weight
	Time
	Controlled-pressure head
	Constant-volume flow
	Overflow

Liquid-filling machines are classified here in terms of two fundamental characteristics: filling principle employed (see Table 1) and container-positioning method used (see Table 2). Except for a few specific restrictions (discussed below), the two characteristics are independent, but certain combinations are not commercially available. Packagers can select from a wide range of fillers, however. Among the members of the U.S. Packaging Machinery Manufacturers Institute (PMMI) alone, 61 companies offer liquid fillers (1), and this figure does not include machines made in other countries.

METHODS OF FILLING

In Table 1, the methods of fill are divided into two primary categories: the *sealed-container system*, in which the filling device seals positively against the container; and the *unsealed-container system*, in which the container is left open to the atmosphere during the fill process.

Sealed Container Filling System. In sealed-container filling, there are seven distinctly identifiable types of fillers. All sealed-container fillers fill to a controlled level in the container.

Table 2. Container Positioning Methods and Configurations

Positioning Method	Configuration
Manual	
Automatic, in-line	Single or dual lane
Automatic, rotary	Single or dual lane

Balanced-Pressure Fillers. The first three of the seven mentioned above are balanced-pressure fillers, in which product flows through a valve into the container from a tank of liquid located above the container, and air from the container is vented back to the headspace in the tank through the same valve. The typical embodiment of such a filling system, *gravity filling*—one of the simplest and most reliable—is illustrated in Figure 1. As the filling takes place through the sleeve-type valve illustrated, liquid flows from the tank through the liquid port into the container, and air within the container flows up the vent tube to the top of the tank. The container fills product to an exact level determined by the position of the vent port relative to the bottle. Any liquid in the vent from a previous filling cycle is returned to the product in the tank by the air flowing up the vent tube. If necessary, air or vacuum may be used to clean the vent before the start of fill.

A modification of pure gravity filling is the *gravity–vacuum filler*. In such a system, a low vacuum is maintained in the headspace in a sealed tank. When the container is brought into sealing contact with the filling valve and the valve is opened, the pressure of air in the container helps force any product in the vent back into the tank, accelerating the start of the filling process. The use of gravity–vacuum fillers also prevents the loss of product that would occur if a chipped or slightly broken container were filled. This savings is of particular advantage when filling more expensive products.

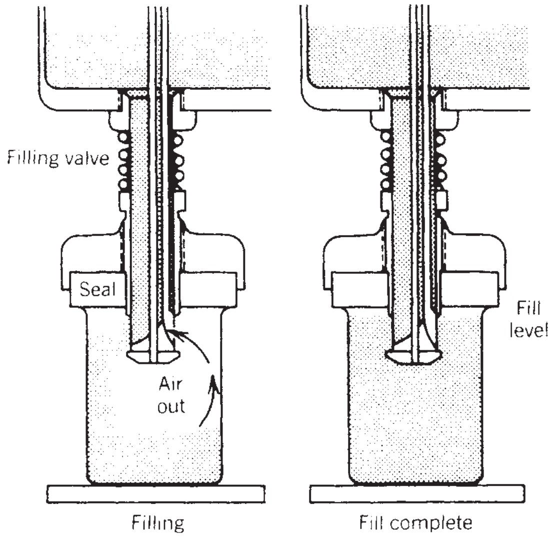

Figure 1. Pure gravity filling. (Courtesy of Horix.)

To fill thin-walled plastic containers, such as 1-gal (3.8-L) milk bottles, a pulsating vacuum in the tank is sometimes used to cause the container walls to flex in and out, assisting the foam in moving up the vents. The pulsations must be timed so that a container is not flexed inward at the position at which it is ready to break away from the filling valve, because this could cause underfill.

Thousands of different styles of filling nozzles, which use single ports, multiple ports, screens, sliding tubes, or check valves, are offered by various manufacturers. All these styles are designed to achieve the maximum production rate with the fewest number of filling valves and provide greater accuracy of fill. The selection of nozzle type is probably best left to the judgment of the machinery manufacturer, on the basis of experience and product testing.

Counterpressure fillers for carbonated beverages are discussed elsewhere (see the Filling machinery, carbonated liquid article).

Unbalanced-Pressure Fillers. Unbalanced-pressure fillers use a difference in pressure between that on the liquid to be filled and on the vent that permits air in the container to escape during the filling process. The usual combinations are listed in Table 1. The use of unequal pressure permits higher rates of product flow than possible with the balanced-pressure fillers. Unequal pressure is particularly advantageous when filling containers with small openings, viscous products, or large containers. Unbalanced-pressure filling has the disadvantage of requiring an overflow-collection/product-recirculation system, in contrast to the relative simplicity of balanced-pressure fillers. Higher liquid-flow rates do not necessarily result in faster filling because the additional foam generated by rapid entry of product into the container must be drawn off through the overflow system to obtain accurate filling-level control.

A schematic diagram of a typical *vacuum filler* is shown in Figure 2. The supply tank may be located either above or below the container to be filled. After the filling valve seals against the container and the valve opens, the vacuum on the vent draws the liquid into the container up to the filling level. Usually, a substantial quantity of

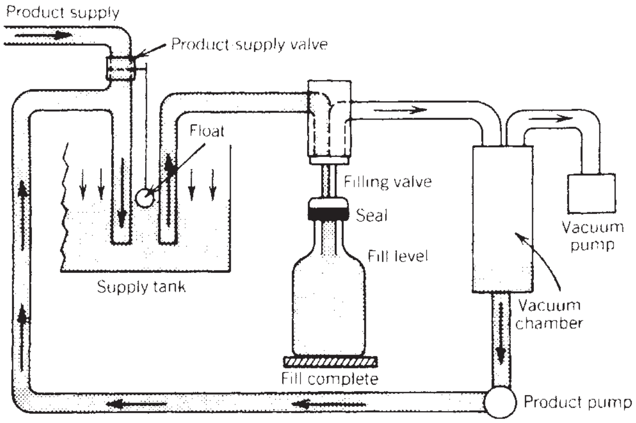

Figure 2. Pure vacuum filling. (Courtesy of PMMI.)

liquid is drawn into the vent, which leads to an overflow tank. Product is recovered in the overflow tank and then recycled.

The *prevacuumizing filler* is a special form of vacuum filling. On such a filler, a vacuum is first drawn in the container, evacuating the air. The valve then permits liquid to enter the container. Because such a system is complex and expensive, it is normally used only when liquid is being added to solids already in the container. Certain solids, such as peach halves, trap air. Such air entrapment may be eliminated by use of a prevacuumizing filler.

In an unbalanced-pressure *gravity filler*, the product-supply tank and the overflow tanks are open to the atmosphere, but the product tank is located above the container and the overflow tank is located below the container, permitting the differential pressure achieved by the difference in elevation to cause product flow. Such a filler is necessarily rather restricted in its ability to adapt to varying products and containers because the pressure difference is established solely by the product-tank and overflow-tank locations. Fillers of this type are not common.

A *pressure filler* is similar to a vacuum filler except that pressure is applied to the product. This may be achieved either by pressurizing the headspace over a tank or by direct pumping of the product to the filling valve. In the most common form of pressure filling, the product is pressurized, and the overflow tank is open to the atmosphere. Such a system allows unbalanced fill without vacuum. This is desirable when vacuum cannot be drawn on the product.

For example, drawing a high vacuum on alcoholic beverages can reduce the alcoholic content of the beverage. Applying a vacuum to a hot product, such as juice at 200°F (93°C) causes the liquid to flash. If desired, both the product and the vent can be maintained above atmospheric pressure, but with a higher pressure on the product. Such a filler is often used for filling lightly carbonated products, such as certain wines, using the pressure to retain the low carbonation in the product.

Unsealed Container Filling Systems.

Level-Sensing Fillers. Level-sensing fillers fill containers to a controlled level without sealing the container, as shown in Figure 3. Such a filling technique eliminates product recirculation and allows filling to a level in plastic containers that would bulge out or flex inward if pressure or vacuum were applied to the sealed container. A level-sensing filler uses some type of sensing means, typically a flow of ultra-low-pressure air. The rising liquid level in the container blocks air-flow, triggering a control system that shuts off product flow to the container. Such control mechanisms, which are required at each filling nozzle, are expensive, but high rates of fill may be achieved because there is no product overflow and no foam to be removed. Electronic sensing is also available.

Piston Volumetric Fillers. Currently, unsealed-container fillers are the most common, and volumetric filling is a frequently used method. In view of this popularity, many different kinds of volumetric fillers are available. For volumetric filling, piston fillers are most widely used. Table 1 indicates four subclasses of piston fillers, depending on the orientation of the pistons, specifically vertical or horizontal, and inlet arrangement.

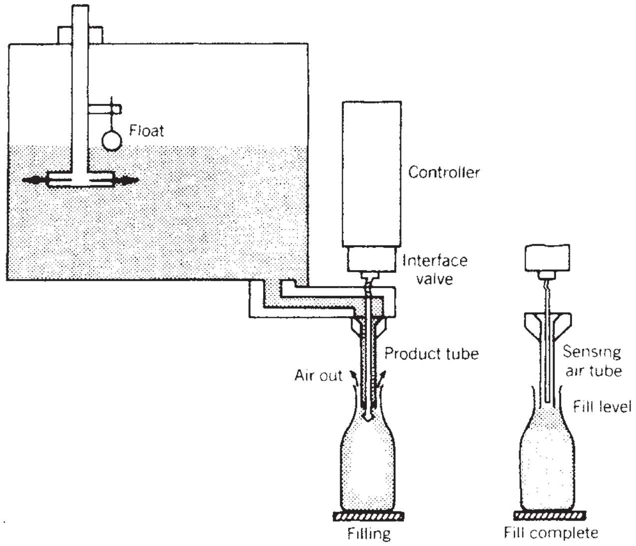

Figure 3. Level-sensing filling. (Courtesy of PMMI.)

1. *Cylinder Vertical, Closed Ends*. One station of a typical vertical-cylinder rotary filling machine is illustrated in Figure 4. The valve(s) controlling the product flow between the supply tank, measuring chamber, and dispensing nozzle may have either a rotary or a reciprocating motion. The rotary style, which is more common, is illustrated. The product is drawn into the cylinder from the liquid-supply tank when the piston moves upward. The valve then rotates to permit the premeasured volume in the cylindrical chamber to flow into the container. Usually, either a direct mechanical drive from a cam track or an air cylinder is used to stroke the piston. If an air cylinder is used to drive the piston, controls are usually such that the piston does not cycle if a container is not in place. This eliminates moving the liquid back and forth between the measuring chamber and the supply tank, a situation that is usually undesirable and may cause product breakdown with foods such as mayonnaise. It is not easy to uncouple a mechanically driven piston.
2. *Cylinder Vertical, Open-End Inlet*. In an alternative design, product enters vertical volume chambers through cylinders open at their upper ends, with a cam drive located below. A nonrotating plate with an orifice allows product to enter the open-ended cylinders at the appropriate position during the rotation of the filler bowl. Such a configuration is mechanically complex and generally considered difficult to clean. Fillers of this type have the advantage, however, of being able to handle products containing sizable solids in suspension.

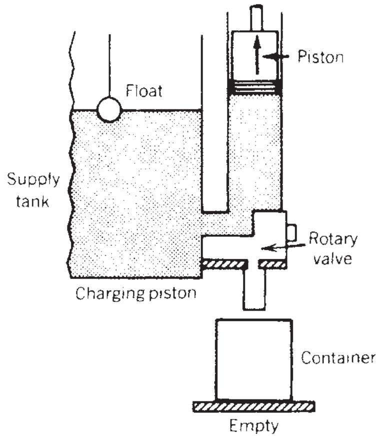

Figure 4. Piston volumetric filling. (Courtesy of PMMI.)

3. *Cylinder Horizontal*. Measuring cylinders may be mounted horizontally. Usually single-ended, they are similar to vertical cylinders in operating principle. They are frequently found on in-line, large-volume fillers to avoid excessive height for such machines. A volume cylinder may also be double ended, with inlets and outlets at both ends. Product under pressure flows into one end, which causes a floating piston to move and expel the liquid in the opposite end of the cylinder into the container. In some fillers, the double-acting cylinder may be used for a single fill, and the first half of the fill comes from one end. The flow pattern is then reversed to discharge product from the other end of the cylinder for the second half of the fill while the first end is being filled for the next cycle.

Rolling-Diaphragm Volumetric Fillers. The volumetric fillers described above normally have some type of a seal, such as V or O rings, between the pistons and cylinder walls. An alternative method for measuring volume is to use a rolling diaphragm; a typical arrangement can be observed in Figure 5. The diaphragm provides an absolute seal and also eliminates the friction contact of a seal with a cylinder wall. Such sliding causes abrasion and particle generation, which is seldom important, but minimizing particulate generation is important in the packaging of intravenous solutions and injectable drugs. Rolling-diaphragm volumetric fillers often employ flexible diaphragms or pinch valves to control product flow to and from the measuring chambers.

Displacement-Ram Volumetric Fillers. Another method for dispensing a specific volume of liquid is to use a displacement ram. The ram enters one end of a cylinder through a seal of some type, but the displacement ram does not touch the inside of the cylinder wall. An external air cylinder drives the ram, which displaces a controlled volume from the cylinder into the container. Such fillers are easy to clean.

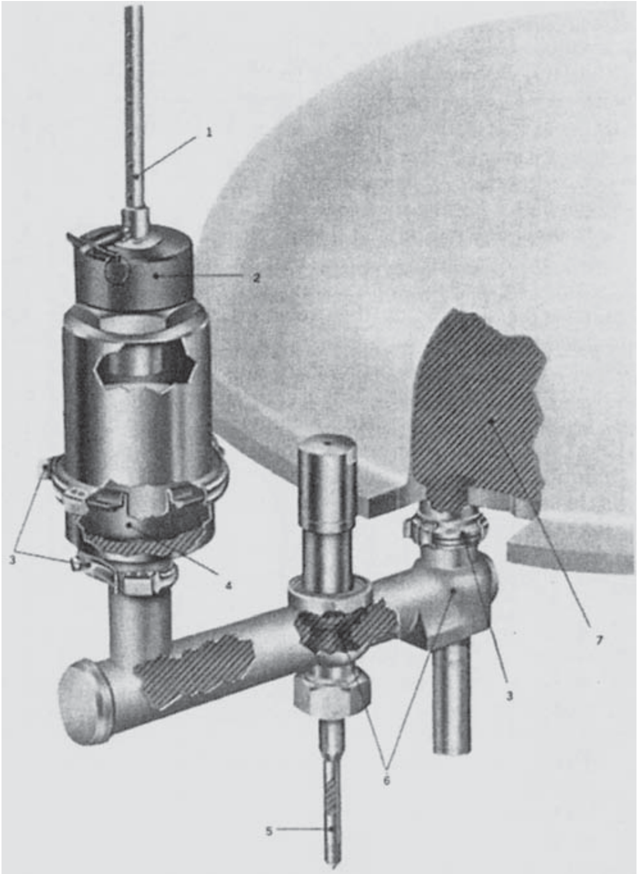

Figure 5. Rolling-diaphragm volumetric filling: (1) volume adjustment rod; (2) precision volume adjustment; (3) quick-disconnect design; (4) volume-chamber diaphragm; (5) product tube; (6) valve seats; (7) product supply manifold. (Courtesy of Horix.)

Volume-Cup Fillers. Cup-type volumetric fillers operate by first transferring the product from an open tank into measuring cups of precise volume. Depending on the design, each cup may be filled to a level matching that of the tank, or the cup may fill to overflow and then rise above the level of liquid in the tank. Each valve then opens at the bottom, permitting liquid to flow from the cup into a container. Although such fillers are appropriate only for low-viscosity liquids that do not cling to the sidewalls of the cups, for suitable applications the volume-measuring method is accurate, inexpensive, and reliable. Various volume-adjustment systems are provided. These fillers are usually rotary and are often designed to be easily changed, by means of a change of filling valves, to gravity or gravity–vacuum filling.

Turbine-Meter Volumetric Fillers. The amount of liquid dispensed from a nozzle can be measured by placing a turbine flowmeter in the line ahead of the nozzle. Such meters, which include an electronic counting and control system to start and stop flow, are accurate but expensive and are generally used only for filling large containers, i.e., ≥ 5 gal (≥ 19 L).

Positive-Displacement Volumetric Fillers. Viscous liquids may be moved directly from a supply system through a positive-displacement pump into a container. Volumetric measurement is achieved by accurately controlling the number of revolutions made by the pump. An auger may be used as the pump mechanism.

Peristaltic-Pump Volumetric. Peristaltic pumps are often used to fill sterile liquids, as they are easy to clean and have no sliding parts that might contaminate the product being filled.

Weight Fillers. On *gross-weight fillers*, each fill station is fitted with a weighing device, typically a beam scale, which acts to shut off product flow when a predetermined weight has been reached. Each scale is set for the maximum weight of container and contents. Adjustment for other containers and content weight may be made by adding special weights to each filling platform.

By using a load cell as the weighing device, the weight is electronically measured continuously, and liquid flow is stopped at a predetermined weight. With microprocessor controls, the change from one weight to another is simple. *Net-weight fillers* employ more advanced load-cell weighing devices. The tare weight of each container is measured, and then product fill proceeds until the proper net weight is in the container. Net weight filling is the most accurate method for filling free-flowing products. Such fillers are readily available with simple, easily cleanable, nonsliding contact valves. They are usually relatively expensive, as each filling station requires a load cell and its associated electronic interface. But, such costs are often justified by the reduction of product overfill possible with the increased accuracy.

Time-Fill Fillers. Time-fill filling consists of delivering liquid under pressure to an orifice that is open for a controlled length of time. Such a filler may be either of the controlled-pressure-head type or the constant-volume-flow type. On multistation *controlled-pressure-head* fillers, which are most frequently in-line, all orifices are opened for approximately the same length of time. Minor adjustments may be made at each station to compensate for individual orifice characteristics. Until recently, such time-fill fillers depended for their accuracy on maintaining a precise pressure head on the liquid at the orifice. This was achieved with pressurizing tanks or a liquid level established by flowing the product over a dam. Small pressure fluctuations are now acceptable, because a microprocessor controls the time each orifice is open, on the basis of measured pressure variations. Such fillers are designed for easy cleaning and changeover from one product to another. To date, such fillers have not generally been used for high-speed production runs. They are probably best suited to filling pint (473 mL) or smaller containers with free-flowing liquids.

The *constant-volume-flow* type of time filler is almost always adapted to a rotary filler. In a typical embodiment (see Figure 6), product is delivered continuously to the filler at a constant flow rate, using constant-displacement pumps or their equivalent. The amount of product entering each container is proportional to the length of time a nozzle is under the liquid ports. The time is determined by the rotational speed of the filler. Constant-volume-flow time fillers are relatively simple and inexpensive. They are capable of reasonable accuracy, particularly with products of medium to high viscosity. Leakage between plates is hard to control with low-viscosity liquids. The product flow must be simultaneously altered any time the filler is stopped or started. It is difficult to do this and maintain consistent filling accuracy. Because a no-container/no-fill mechanism is rarely provided, any missing containers cause product overflow, which must be collected and either returned for reuse or discarded.

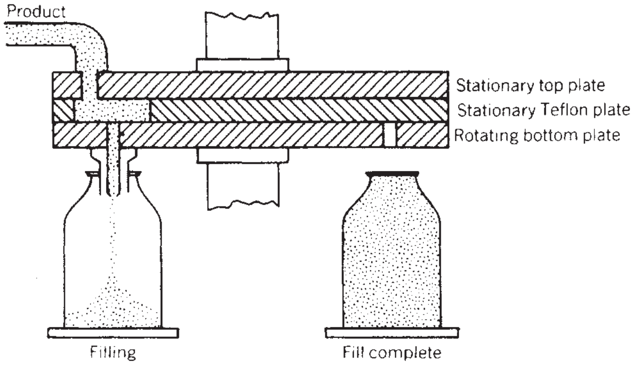

Figure 6. Constant-volume-flow time filling. (Courtesy of PMMI.)

Overflow Fillers. Some products can be filled by filling open containers, usually sanitary cans or widemouth glass bottles, to overflow. The liquid may flow from a pipe or over a barrier. In more advanced overflow fillers, the liquid flow into open containers is directed by moving funnels synchronized with the movement of containers. The headspace in the container, which is typically small, may be established in various ways. When brine is added to pickles, for example, the headspace is usually created by displacement pads that enter the container and establish the desired headspace. If solids are present, then the headspace pads also ensure that the solids are properly down into the container. Another method of establishing headspace is to tilt the containers slightly, permitting liquid to pour out. With some overflow fillers, an upwardly directed curtain of air prevents the overflowing liquid from contacting the outside of the containers. With careful adjustment of liquid flow rate and container speeds, the amount of fluid that is overflowed and recirculated may be limited to a very small proportion. Tilted-container overflow fillers are relatively fast and inexpensive. They are frequently used for filling juice in cans, but they normally cannot be used to fill narrow-neck containers.

CONTAINER POSITIONING

Filling machines may be characterized by the way they deliver containers to the liquid-dispensing mechanisms and remove them after filling (see Table 2).

Manually Loaded Fillers. The oldest and simplest method of container delivery and removal is by manual means. Filling occurs after one or more containers are in place. The containers may be raised to the filling valves or the valves lowered to the containers, or no relative motion may be required. Because of the amount of labor involved, manual filling is usually limited to small production runs.

In-Line Fillers. The simplest automatic fillers are single-lane in-line machines. In a typical machine of this type, containers, standing on a conveyor, are delivered to the filler. One or more containers back up behind a stop or gate. The barrier then opens, and a controlled number of containers move under the filling heads, where they are positioned by another barrier of some type. Conveyor motion is usually intermittent, with the conveyor stopped during the fill cycle to prevent tipping the containers. After the filling is completed, the positioning barrier opens, and the filled containers leave while unfilled packages enter.

The size and shape of a container are factors that determine how many containers may be filled simultaneously on an in-line intermittent-motion filler. Increasing the number of filling stations increases the total output of the machine, but this approach runs into space limitations and at a certain point, an additional valve is not cost-effective. Sixteen stations seem to be the maximum commercially feasible number of valves. If the containers are not straight sided, then there usually is difficulty in backing up any significant number behind a positioning stop; even with straight-sided containers, the process is limited by container dimensional tolerances. The size of the containers determines the position of the last container in a row relative to the first container. If the lead container is not properly positioned under a nozzle, then the accumulation of container dimensional tolerances may cause the trailing container not to be positioned under a nozzle.

An in-line filler may be used for in-case filling. A multiple array of filling valves is used to fill all the containers in a case at the same time. As with individual containers, two or three cases may be backed up for simultaneous filling. Such filling is possible only if the cases have reasonably consistent dimensional control.

A variation of in-line intermittent-motion filling is occasionally used to raise the containers relative to the filling nozzles. This is done (e.g., in filling mayonnaise or peanut butter) to change the position of the container relative to the nozzle during fill. On such a filler, the containers are moved by means of a pusher mechanism from the infeed conveyor onto a platform under the filling heads, and the platform is then raised. After the containers have been filled and the platform lowered, successive unfilled containers may be used to push the filled packages onto a discharge conveyor running behind and parallel to the infeed conveyor, or individual mechanisms may move the containers between the infeed and discharge conveyors. Some manufacturers offer a rising-platform device with a straight-through conveyor arrangement.

Dual-lane straight-line fillers permit more efficient utilization of filling stations. Containers move on two parallel conveyors. The filling nozzles, in a row, fill in one lane while container movement occurs in the other lane. The use of dual-lane fillers is generally considered only if the limit of the number of valves in a single lane has been reached. They are typically used for small containers because fill time is short relative to the time required for container movement.

Valve use is the percentage ratio of actual filling time, i.e., the time the valve is fully open, to the total cycle time for that valve from the beginning of filling one container to the start of filling the next container. Valve use is low on in-line fillers, i.e., 25% to 50% of cycle time, dependent on conveyor speed, container diameter, and actual unit-filling time required for the fill.

Rotary Fillers. The most common system for filling containers are moderate to high speeds is rotary filling. Containers arrive continuously on a conveyor and are spaced by some means into a rotating infeed star that delivers them, properly separated, to filling stations on the main rotary assembly. The timing mechanism normally employed to take containers coming at random to the filler is a feed screw; for large containers and low-speed operation, timing fingers, escapement wheels, or like devices may be used. The discharge from the main rotary is usually by means of a second star wheel with the same diameter as the first. However, if the liquid level is high in the container, either a large-diameter star or a tangential conveyor should be used to prevent spill.

On rotary fillers, valve utilization is almost independent of container size but is a function of filler diameter. For example, a 22-in. (56-cm)-pitch-diameter gravity filler for 32-oz (946-mL) containers has a valve utilization of 49%, whereas a similar gravity filler having the valves on a 60-in. (152-cm) pitch diameter has a valve use of 73%. The time that the valve is closed is necessary for the transfer of containers into and out of the rotary section and for the relative movement between container and filling valve needed to open and close the valve.

The concept of dual-lane rotary fillers, involving two lanes (inner and outer) on the main rotary, was proposed and patented many years ago. Except, perhaps, for large-diameter carbonated-beverage fillers, the system is not practical. Two infeed stars and two discharge stars (or a tangential system) would be needed, and such an arrangement greatly reduces valve use. The fact that valve spacing is limited in the inner row is a disadvantage as well, unless unequal production speeds are desired. In one configuration study, the valve use on an 80-valve, dual-lane, 60-in. (152-cm)-outer-lane-pitch-diameter machine is only 66%, compared with the normal 85% use of a 48-valve, 60-in. (152-cm)-pitch-diameter filler. Adding 67% in number of valves adds only 29% to the production capability.

Continuous-motion in-line fillers use a timing screw to position the containers under multiple filling heads, which move in synchronization with the containers.

Multihead in-line weight fillers may have a conveyor system that separates and stops a group of containers. Weighing platforms then lift the containers above the conveyor for the filling cycle. Alternatively, they may use a lateral transfer device to place the containers on the scale platforms.

Relative Motion. The relative motion between the container and the liquid-dispensing device can significantly affect filler performance. The various relative motions possible are none, raise container, lower valve, and raise container and lower valve.

In sealed-container filling (see Table 1), relative motion between the container and the valve is required to bring the valve into contact with the container. With manual container placement, the container can be raised against the valve, or the valve(s) can be lowered to one or more containers on platforms.

The valve use of rotary sealed-container fillers can be increased by lowering the valve (see Figure 7). With a descending valve, the valve can begin to enter the container at position 1, and it must be clear of the container at position 1′. If the container is to be raised up to the valve, the rise may not begin until position 2 because space must be allowed for the container platform to clear the infeed star. Likewise, the container platform must be in the full-down position by position 2′. As an example, with 40 valves on a 60-in. (152-mm) pitch diameter, arc 1–1′ is 327, whereas arc 2–2′ is 306. This 6% difference may be advantageous, but movement of each valve imposes other difficulties on filler design, often including the need for a flexible liquid connection to each valve. Such flexible connections often make cleaning more difficult. The combination of raising the container and lowering the filling valve is very rarely used, as it requires mechanisms for moving both elements, with all the disadvantages of each system.

In-line, sealed-container fillers are rather slow and not common, except for filling containers in a case. Most of those available operate by lowering the valves to the container, which permits the containers to remain on the conveyor. As with sealed-container fillers, level-sensing fillers require relative motion between the filling valves and the container. Rotary level-sensing fillers typically raise the container; in-line fillers bring the nozzle down to the package.

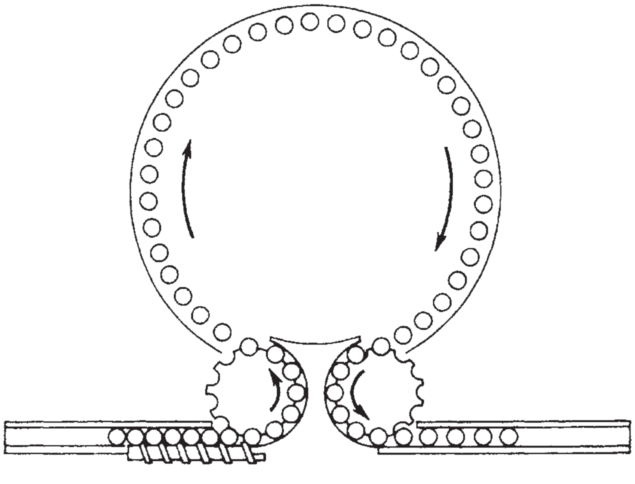

Figure 7. Rotary-filler arrangement.

Volumetric, weight, and time-fill fillers do not require relative motion between the dispensing nozzle and the package. Thus, for simplicity and economy, most of these fillers operate with the nozzle located above the container opening. However, two principal exceptions are as follows:

1. In filling containers with relatively small openings, such as long-neck plastic bottles, greatly increased rates of flow are possible if the product flow emerges from the side of the tube and is directed against the container wall (see Figure 1). Filling straight down into that style of container from above may cause air entrapment with consequent possible splashout or overflow at the end of the filling cycle. The lost time, if any, required to raise the container or lower the filling valve may be more than offset by the faster flow rates possible.
2. Viscous products such as mayonnaise and peanut butter are best filled volumetrically using a flow tube open at the bottom. To prevent air entrapment, the flow tube is maintained at a position very close to the rising surface of the liquid by lowering the container during the filling cycle.

CONSIDERATIONS IN DESIGN AND SELECTION OF FILLERS

Many factors must be considered in selecting filling machinery. These include such obvious factors as operating and maintenance costs, efficiency, reliability, size, speed, and materials of construction. Several considerations, discussed below, are specific to liquid-filling machinery and important to the satisfactory operation and use of such equipment.

Accuracy. The accuracy of fill is important for two reasons: (a) it is necessary to comply with state or other regulations as to labeled content [the regulatory agencies generally refer to the filling tolerances recommended in the *National Bureau of Standards Handbook 44* (2)] and (b) in addition to meeting legal requirements, however, packagers of most products desire to keep overfill to a minimum, thus minimizing product giveaway. Even with relatively inexpensive products, the amount given away with inaccurate overfilling on high-speed production lines can usually justify the higher cost of purchasing more accurate fillers.

Changeover and Cleaning. As a part of operating costs, the time and labor required for cleaning and preparing the filler for daily operation, changeover from one product to another or one container to another, and cleanup at the end of each day's production should be carefully evaluated. User needs may range from fillers that operate 24 h per day with no need for product or container-size change, to fillers for 30-min production runs, after which the filler must be completely sterilized and adjusted for a different container size. Comments are made above concerning the influence of filling techniques. The manufacturer's descriptions of container-positioning methods contain comments on cleanability, container-size flexibility, and ease of adjustment. Specific aspects of each filler design must be carefully considered in choosing the proper liquid filler for a particular application.

No-Container/No-Fill System. In general, it is desirable to have a filler equipped with some type of no-container/no-fill system. In most sealed-container fillers, the filling-valve mechanism is designed to automatically provide a no-container/no-fill system in conjunction with the action of the container and the filling valve coming together. Likewise, with most of the unsealed-container filling techniques, a relatively simple container-detection device can be used to prevent product flow if no container is present. The constant-volume time filler does not permit start or stop of product flow, but means such as drains in the container platform to catch the product flow may be provided. Alternatively, particularly on in-line fillers, a control system may be provided to ensure that a full row of containers is present.

Drive Location. The location of the main drive for the filler should be considered in filler selection. Usually, the main motor drive, or, alternatively, a lineshaft synchronization system, is located near floor level. Thus, the heavy drive components are conveniently supported and reasonably accessible for routine maintenance. Because the splash of corrosive products may significantly harm drive components even if they are protected against splash, some filler manufacturers locate the main drive above the product. This may not be desirable for filling food or drug products because of the potential for product contamination from drive lubricants.

Equipment Standards. Various industry-consensus standards are applicable in the United States:

ANSI B155.1-1994	*Safety Requirements for the Construction, Care, and Use of Packaging and Packaging-related Converting Machinery*, American National Standards Institute
3-A Sanitary Standard 17-06	*3-A Sanitary Standards for Fillers and Sealers of Single Service Containers for Milk and Fluid Mild Products*, International Association of Milk, Food, and Environmental Sanitarians; U.S. Public Health Service; The Dairy Industry Committee

The first standard is general but applicable to fillers. The 3-A Standard is specifically for milk fillers.

The packaging of certain products is regulated by government agencies. The packaging of fluid-milk products in the United States is usually regulated by local (i.e., county or state) authorities. They normally adopt the 3-A Standards without modification, but a few jurisdictions impose their own requirements, usually stricter. If fresh milk is packaged in flexible plastic containers, then the container is usually the legally specified measuring device. In such cases, volumetric tolerances normally follow the recommendation of the National Bureau of Standards (2).

The packaging of liquids in meat and poultry establishments subject to inspection by the United States Department of Agriculture (USDA) Food Safety and Inspection Service is governed by guidelines issued by the department (3, 4). Equipment for packaging food and drug products is regulated in the United States by the Food and Drug Administration (FDA) (CFR Title 21, Chapter I), and the packaging of distilled spirits by the Bureau of Alcohol, Tobacco, and Firearms (BATF).

BIBLIOGRAPHY

1. *The PMMI 1994–1995 Packaging Machinery Directory*, Packaging Machinery Manufacturers Institute, Washington, DC, 1994.
2. *Specifications, Tolerances, and Other Technical Requirements for Weighing and Measuring Devices, National Bureau of Standards Handbook 44*, NBS, U.S. Department of Commerce, Washington, DC, 1987.
3. *Accepted Meat and Poultry Equipment*, Meat and Poultry Inspection Technical Services, Food Safety and Inspection Service, U.S. Department of Agriculture, Washington, DC, May 1984, pp. 1–8.
4. *Guidelines for Aseptic Processing and Packaging Systems in Meat and Poultry Plants*, Meat and Poultry Inspection Technical Services, Food Safety and Inspection Service, U.S. Department of Agriculture, Washington, DC, June 1984.

General Reference

C. G. Davis, Product Filling, Vol 1. of *Packaging Machinery Operations*, Packaging Machinery Manufacturers Institute, Washington, DC, 1987.

FILM, CERAMIC COATED

Noe Obinata
Toppan Printing Company

For food packaging, gas/moisture barrier property is one of the key elements to provide longer shelf life of products. Aluminum foils, aluminum-metalized films, PVDC-coated films, or coextruded EVOH films have played major roles in barrier packaging. However, there are increasing demands for more sophisticated packaging, such as transparency, metal detector capability, microwaveability, retortability, and environmental friendliness as well as barrier properties. Ceramic-coated films are capable of meeting the demands and have become more and more popular recently.

Ceramic-coated films are AlO*x*- or SiO*x*-coated films of excellent barrier properties, having the potentially of reaching almost the same levels of O_2 and H_2O barrier

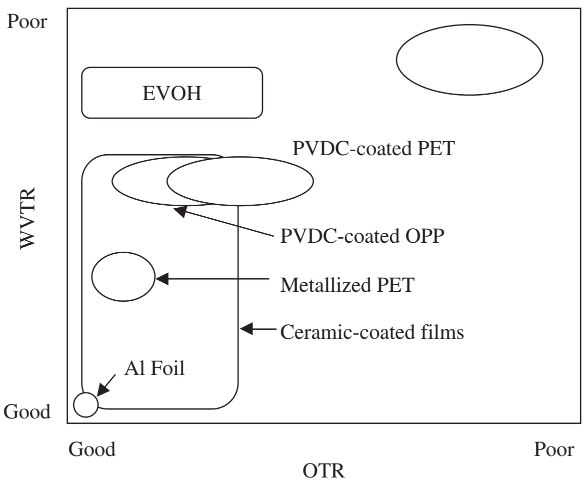

Figure 1. Oxygen and water vapor barrier map of typical barrier films (1).

as aluminum foil (Figure 1). Besides barrier properties, transparency is another important aspect of these films. Although the SiO_x layer is somewhat yellowish, both the AlO_x and SiO_x layers are clear, providing the marketing advantage of allowing the consumer to see the product inside the package and the quality control advantage of more reliable visual inspection. These films also have the advantages of metal detector capability and microwaveability. Unlike aluminum foil or metalized films, these metal-free films allow metal detectors to work properly and do not cause arcing in the microwave oven. Recent improvement also imparts these films with the exciting advantage of being retortable, with the durability to withstand the severe temperature and pressure conditions in the retorting process. In the past, only metal cans, glass containers, and aluminum–plastic pouches were retortable. Replacing the heavier and more bulky metal cans and glass containers with packages made of ceramic-coated films can result in significant cost/energy savings in transportation and waste reduction. A comparison of ceramic-coated films and other barrier films is shown in Table 1.

A physical vapor deposition process is typically used to form ceramic coatings. Figure 2 is an example of an AlO_x coating process. Aluminum is evaporated from a crucible tank by electron beam heating and then reacts with oxygen to form a thin layer of AlO_x onto a substrate. The process is done under high vacuum conditions to achieve efficient evaporation and deposition of the material.

Table 1. Comparison Between Ceramic-coated and the Other Barrier Films, where ○, △, and × are Excellent, Moderate, and Poor, Respectively

Films	Moisture Barrier	Oxygen Barrier	Transparency	Use of Metal Detector	Use of Microwave Oven	Retort Treatment
Ceramic-coated	○	○	○	○	○	○
Aluminum foil	○	○	×	×	×	○
Aluminum-metalized	○	○	×	×	×	○
EVOH	×	○	○	○	○	△
PVDC-coated	△	△	○	○	○	○

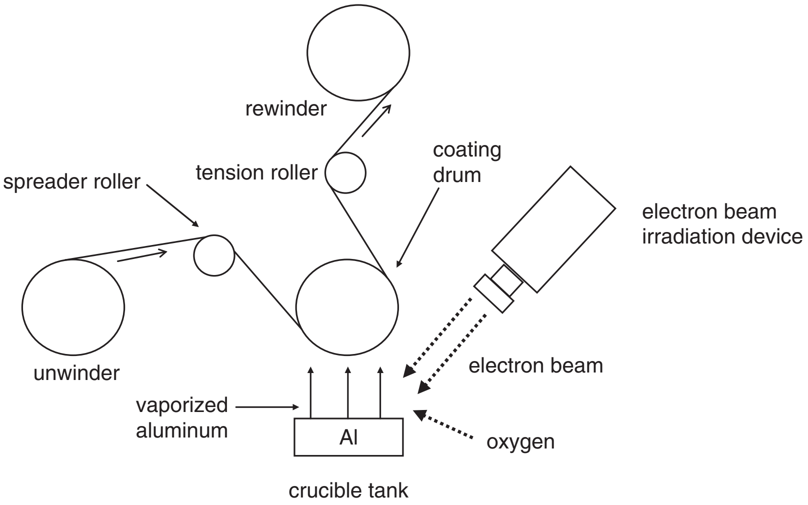

Figure 2. An example of an AlO_x coating process.

Table 2. Barrier Properties of GL/GX Films[a] (2)

Film	O_2 TR[b] (cm^3/m^2/day/MPa)	WVTR (g/m^2/day)
GX	2.0	0.05
GL-AE	5.0	0.6

[a] Films are laminated with LLDPE (60 μm).

[b] O_2 TR measured at 30°C and 70%RH, WVTR measured at 40°C and 90%RH.

Since its commercial introduction in 1989, the Toppan's GL films (ceramic-coated films with SiO_x or AlO_x coating) have been a family of leading transparent barrier films for food packaging applications. Later in 2002, the Toppan's GX films were introduced to provide higher gas barrier (Table 2). The collection of the GL and GX films now provides (a) the gas/moisture/aroma barrier, (b) transparency, (c) printability, (d) capability of microwave ovens and metal detectors, (e) retortability, and (f) environmental friendliness suitable for a wide range of food packaging applications. The GL/GX films have been used for more than 200 food and pharmaceutical products (Figure 3).

Driven by the demand for high-barrier transparent films, ceramic films have become increasingly accepted by packaging suppliers. Some major suppliers and their products are listed in Table 3. Most of the products are available in the United States and Europe. The Mitsubishi's Techbarrier® uses PVA as a base film for high oxygen barrier, but extra care must be taken against moisture absorption under humid conditions. The Toyobo's Ecosyar® uses the two-component process of AlO_x and SiO_x simultaneous coating. According to the supplier's catalogue, the two-component process could provide both advantages of AlO_x and SiO_x, meaning that high density and good barrier are from AlO_x while flexibility and high impact strength are from SiO_x.

Usage of ceramic-coated films has steadily increased in recent years. Their versatile characteristics meet changing demands of food packaging, such as higher barrier, visibility inside the package, and retortability. In particular, retort applications will support expansion of using ceramic-coated films as consumption of retort-pouched food has increased on a world basis. The major market for ceramic-coated films is in food packaging applications; however, a recent trend suggests that the applications of these films for pharmaceutical and electronic products could rise in the next future, although more improvement of the films may need to be made.

BIBLIOGRAPHY

1. Worldpak 2002, *Proceedings of the 13th IAPRI Conference, 2002*, CRC Press LLC, Boca Raton, FL, 2002, p. 410.
2. Functional material, Vol. 27, No. 3, p. 53 (2007).

Figure 3. Example of food packaging applications using GL/GX films.

Table 3. Major Suppliers of Ceramic-Coated Films and Their Products

Suppliers	Products	Barrier Materials	Base Films
Toppan Printing	GL, GX Films	AlO_x, SiO_x	PET, PA
Toray	Barrialox	AlO_x	PET
Dai Nippon Printing	IB-Film	AlO_x, SiO_x	PET, PA
Mitsubishi Plastics	Techbarrier®	SiO_x	PET, PA, PVA
Toyobo	Ecosyar®	AlO_x and SiO_x (two-component process)	PET
Alcan	Ceramis	SiO_x	PET, PA

FILM, EDIBLE

John M. Krochta
Food Science and Technology,
UC Davis, University of
California, Davis, Davis,
California

DEFINITION AND FUNCTIONS

Edible films are stand-alone structures that have appearance and protective functions similar to synthetic polymer films. However, they are comprised of edible proteins, polysaccharides, lipids and/or resins, and other components that render them edible. Thus, they can be consumed with a packaged product, resulting in less packaging that requires disposal. Also, since edible films are made from renewable resources, they contribute to package sustainability.

Edible films by convention have thicknesses $\leq 10\,\text{mil}$ ($\leq 254\,\mu\text{m}$), above which they would be considered sheets. They can be used as food wraps, and some can be formed as food casings or can be heat-sealed into pouches for food products. Edible films can also be formed as coatings directly on the surfaces of food and pharmaceutical products, thus becoming a part of the product.

Present uses of edible films include collagen casings on sausages to inhibit moisture loss and oxygen transport and provide structural integrity; hydroxypropylmethyl cellulose (HPMC) pouches for premeasured food and beverage ingredients; gelatin capsules for pharmaceuticals to improve product appearance, structural integrity, ingestibility and stability; and dissolvable breath strips made from a number of different edible materials. Present uses of edible films as coatings include shellac and wax coatings on fruits and vegetables to prevent moisture loss and improve appearance; methyl cellulose (MC) and HPMC coatings on fried foods to reduce fat update; shellac, wax, and zein coatings on confections and drug tablets to provide moisture resistance and improve appearance; and MC and HPMC coatings on drug tablets to improve product stability appearance and ingestibility.

Edible films and coatings are generally seen as having considerable potential for applications far beyond present uses for improving product quality and safety. In addition to controlling moisture, oxygen, aroma, and/or oil transport and protecting products from mechanical forces, edible films and coatings can act as carriers for edible antioxidants, antimicrobials, and other additives. Furthermore, edible films can be positioned within food products as separation layers to reduce migration of moisture, lipids, and solutes from one food component to another.

In some instances, edible films and coatings have potential for reducing use of synthetic packaging films. However, they are not intended to eliminate the need for nonedible protective packaging. Rather, they are intended to work with conventional packaging to improve product quality and shelf life. To the degree that an edible-film wrap, casing, pouch, capsule, or coating functions to protect the product from the environment, the amount and complexity of nonedible protective packaging can be reduced, leading to source reduction and improved recyclability. For example, an edible pouch for premeasured dry milk powders used in bakeries may only need a recyclable paperboard box as a secondary package. Or, an edible oxyen-barrier coating on roasted peanuts could eliminate the requirment for an oxygen-barrier layer in a flexible pouch, resulting in a single-layer moisture-barrier package that is more easily recycled. In addition, after packaging is opened, an edible coating can continue to protect the product.

The objective of this article is to review the materials, manufacture, properties, applications, and trends of edible films. The area of microencapsulation of food and drug ingredients is not covered.

FILM COMPOSITION

Components of edible films must meet the same rigorous standards applied to all food ingredients. Materials used in formation of edible fims must be generally recognized as safe (GRAS) for intended use or sanctioned by the *U.S. FDA Code of Federal Regulations* or the *U.S. Pharmacopoeia/National Formulary* (or equivalent). It is also necessary that all edible film components be included on the product label, to provide information critical to consumers with allergies or intolerances to particular food components.

Film Formers

Film-forming materials available for edible films fall generally into the categories of polysaccharides, proteins, lipids, and resins derived from plants and animals. Protein film formers include collagen, gelatin, casein, whey protein, corn zein, wheat gluten, and soy protein (1–4). Polysaccharide film-forming materials include cellulose derivatives, starch and starch derivatives, carrageenan, alginate, pectinate, and chitosan (5, 6). Layering and blending of proteins and polysaccharides show potential for optimizing film properties (7–9). Films can also be produced from purees of foods such as fruits and vegetables, which contain combinations of ingredients (10). The polar hydrogen-bonding character of polysaccharides and proteins produces films that have (a) high moisture permeability, (b) low oxygen and lipid permeabilities at lower relative humidities, and (c) compromised barrier and mechanical properties at higher relative humidities. Edible lipids and resins include carnauba wax, candelilla wax, beeswax, triglycerides (e.g., milkfat fractions), acetylated monoglycerides, fatty acids, fatty alcohols, sucrose fatty-acid esters and shellac (11–15). Lipid and resin materials are not polymers and, therefore, do not generally form coherent stand-alone films. However, they can provide gloss and/or moisture-barrier coatings on food or drug surfaces, or they can constitute the moisture-barrier component of a composite film. Composite films can consist of either (a) a lipid layer supported by a polysaccharide or protein layer or (b) lipid material dispersed in a polysaccharide or protein matrix (16, 17).

Materials used for edible films also have potential for replacing synthetic polymers in some nonedible applications, including replacing synthetic polymer coatings on paper or on other synthetic plastics (18, 19). Besides being derived from renewable resources, they are biodegradable; and when used as coatings for paper or plastic, they have potential for being more easily separated to make the paper or plastic more easily recyclable.

Plasticizers

Like synthetic polymer films, edible films often require incorporation of low-molecular-weight plasticizers to improve film flexibility and durability. Plasticizers generally interrupt polymer chain-to-chain interactions and lower the glass-transition temperature (T_g), resulting in greater flexibility but also, unfortunately, increased film permeability. Plasticizing materials acceptable for edible films include sucrose, glycerol, sorbitol, propylene glycol, polyethylene glycol, fatty acids, and monoglycerides. Depending on the composition, size, and shape of plasticizer selected for a certain polysaccharide or protein film-former, the effect on barrier properties relative to the improvement of mechanical properties can be minimized (20, 21). Water is also a plasticizer for polysaccharide and protein edible films. Thus, film moisture content as affected by content of other plasticizers and the surrounding relative humidity can have a dramatic effect on edible-film properties.

Other Additives

Edible films can be considered active packaging, because their edibility provides a function beyond passive barrier. Edible films show promise for being additionally active through incorporation of antioxidants (22), antimicrobials (23–27), nutrients, nutraceuticals, flavors and colors to enhance food safety, nutrition, and quality (28–30). For some food-coating applications, addition of surfactant to a film formulation may be necessary to ensure good surface wetting, spreading, and adhesion (31).

FILM MANUFACTURE

Methods for forming films include a wet (solvent) casting method and a dry (extrusion) method (32). Besides solvent casting, lipid films and coatings can also be formed from a melt.

Solvent Casting

This approach to forming edible films from aqueous, aqueous–ethanol, or ethanol solutions or dispersions is similar to production of certain synthetic films (e.g., polyvinyl chloride) by solvent casting. The solution or dispersion is spread on a smooth surface. After the solvent evaporates, a film can be stripped from the surface. With the exception of collagen, corn zein, and wheat gluten, most of the polysaccharide and protein film-forming materials are soluble in water. This can be an advantage in terms of film manufacture and use, but makes films whose properties are especially vulnerable to moisture. Corn zein and wheat gluten films must be formed from aqueous–ethanol solution or from an aqueous dispersion, but provide a somewhat improved moisture barrier compared to other protein-based films formed from aqueous solution. Wax films, layers, or coatings can be formed from ethanol solution. Edible-film production that requires ethanol necessitates appropriate safety measures and solvent recovery for commercialization. Water-insoluble whey protein films result from heat-treated aqueous whey protein solutions due to denaturation and subsequent intermolecular crosslinking of individual whey protein molecules (33).

Edible films from methyl cellulose (MC) and hydroxypropylmethyl cellulose (HPMC) are manufactured commercially by solvent casting on a continuous belt, with subsequent drying, removal, and winding of the resulting film. Such films can be formed into edible, water-soluble pouches for food ingredients. Gelatin capsules cast from aqueous solution find broad use in the pharmaceutical industry. Hard capsule halves are formed on steel pins by dipping into gelatin solution, followed by drying and removal from the pins (34). After a drug is filled into a hard capsule half, two interlocking halves are joined to form the full capsule. Soft capsules containing a drug or vitamin are formed from two previously formed sheets of plasticized gelatin by injection of the drug at the moment when the two sheets are brought together between the rotating halves of roller dies (35).

Polysaccharide–lipid bilayer films with excellent moisture-barrier properties have been produced from aqueous–ethanol solutions of cellulose derivatives with lipids (36, 37). As the solvent evaporates, phase separation results in bilayer formation. Lipid layers or coatings can be formed directly from ethanol solution or aqueous emulsion. Stable emulsions of lipids in proteins or polysaccharides produce well-dispersed composite films with improved moisture barrier compared to protein or polysaccharide films alone, but inferior moisture barrier compared to bilayer films. Research efforts continue to develop composite edible films with good moisture-barrier properties (17, 18).

Extrusion

Water-insoluble, edible collagen film sausage casings and meat wraps are made by regenerating collagen that is extracted from animal hides. Collagen casings and wraps are produced by extruding a viscous, aqueous suspension of purified acidified collagen into a neutralizing coagulation bath, followed by washing, plasticizing, and drying (38). Some polysaccharides and proteins display thermoplastic behavior, and this property is being explored for edible-film production by thermoplastic extrusion (39). Successful, efficient production of edible films using conventional extrusion equipment would improve commercialization opportunities.

Molten Casting

Lipid films, layers, and coatings can be produced by cooling of a melt to produce a solid structure. Challenges include the high temperatures required for some melts, film thickness control, adhesion, and brittleness of some materials. Forming a lipid layer from a melt on a precast polysaccharide or protein film is an alternative approach for manufacturing an edible composite film with good moisture-barrier properties.

FOOD AND DRUG COATING

Formation of edible films as coatings on foods and drugs generally consists of solvent casting directly on the food or drug surface. Application of film-forming solution, suspension, or emulsion can be by dipping, spraying, dripping, or enrobing.

Fruits and Vegetables

Edible coatings on whole and minimally processed fruits and vegetables generally serve to reduce moisture loss, improve appearance, and, in some cases, control oxygen and carbon dioxide exchange and/or carry an antimicrobial (40–42). Materials commonly used include beeswax, carnauba wax, candelilla wax, shellac, and mineral oil. These materials cannot form stand-alone films, but form continuous coatings on the fruit or vegetable surface. Film coatings based on polymeric materials such as cellulose derivatives, chitosan, and proteins have been developed to reduce oxygen and carbon dioxide exchange for respiration and ripening-rate reduction. Coating solution or emulsion is most typically sprayed or dripped onto the fruit or vegetable and/or onto a bed of brushes rotating either below or above the produce, followed by drying. Thorough distribution of the coating over the entire fruit or vegetable is dependent on a clean, dry produce surface and suitable surface tension and viscosity of the coating formulation.

Confections, Nuts, and Drug Tablets

Edible coatings on confections, nuts, and tablets serve to resist moisture change, reduce oxygen uptake, improve structural integrity, and make the product more palatable by adding gloss and/or flavor or, in the case of drugs, by masking flavor and improving ingestibility (43, 44). Materials commonly used include shellac, corn zein, cellulose derivatives, waxes, and acetylated monoglycerides. The most common method of coating involves controlled spraying (or ladeling) and drying of coating formulations on the product surface in a rotating, horizontal drum-like chamber called a “pan.” Formation of a uniform coating depends on good product coverage, thorough product tumbling action to help distribute the coating formulation, and rapid drying to allow gradual buildup of the coating. Coatings can also be formed on product surfaces in a fluidized-bed system. Coating formulations are sprayed into a fluidized-bed of the product, where tumbling action spreads the coating formulation and the fluidizing air dries the coating. This method is commonly used in the pharmaceutical industry, but has potential for use in coating foods such as nuts that have consistent size and shape (45). Successful pan-coating and fluidized-bed-coating depend on suitable coating-formulation surface tension and viscosity.

Other Foods

Many other foods have been considered for coating to improve quality and safety. Coatings have been developed for meat, poultry, and seafood to prevent moisture loss and oxidation and to improve color, flavor, and microbial stability (43, 46, 47). Such coatings can be applied by dipping, spraying, foaming or brushing. Coatings and batter-and-breading ingredients have been studied and commercialized for reducing fat uptake in fried foods (48, 49). Application is normally by dipping, brushing, spraying or enrobing. Requirements of edible films and coatings are especially stringent for military and outer-space food applications (50). Edible coatings have also been developed for use in low-energy osmotic dehydration of foods, to reduce solute uptake without slowing water removal (51).

FILM PHYSICAL PROPERTIES

Standard methods for testing packaging materials are used to detemine properties of edible films. Depending on which food or drug application is considered, different barrier, mechanical, surface, and optical properties are of most interest. Tables 1–3 compare the permeability and mechanical properties of edible films made from representative materials presently used or proposed for use. It is essential to understand that plasticizer content and test conditions (temperature and relative humidity) have important effects on film properties. Increasing relative humidity increases the moisture content of polysaccharide- and protein-based films, resulting in increased permeability and decreased strength. Thus, comparison of edible-film properties must be approached with caution.

Because of their polar hydrophilic nature, polysaccharides and proteins form films that are poor moisture barriers compared to the low-density polyethylene (LDPE) packaging film commonly used to protect foods and drugs from moisture (Table 1). However, when polysaccharides or proteins are combined with edible waxes or fatty acids in composite films where the polysaccharide or protein provides film structural integrity, films with moderate-to-good moisture-barrier properties result. HPMC- and MC-based composite films have been developed which are bilayer in nature, with resulting excellent moisture barrier properties. This occurs because the water-vapor permeabilities of waxes and fatty acids rival that of LDPE. In the case of wax coatings on fruit and vegetable surfaces, it is not necessary to use the film-forming and lipid-supporting nature of an edible polymer.

The polar nature of polysaccharides and proteins results in films that are good oxygen barriers at low-to-intermediate relative humidity (rh) (Table 2). Polysaccharide and protein films are better oxygen barriers at 50% rh than is LDPE film, which is a poor oxygen barrier. Protein edible films appear to be better oxygen barriers than polysaccharide, resin, or lipid films, with permeabilities approaching that of the excellent oxygen barrier provided by ethylene–vinyl alcohol copolymer (EVOH) at low-to-intermediate rh (see Ethylene–vinyl alcohol copolymer). In addition, the molecular composition and literature data

Table 1. Water-Vapor Permeabilities of Selected Edible Films Compared to Low-Density Polyethylene Film

Film	Test Conditions[a]	Permeability [(g · mm)/(m^2 · day · kPa)]	Reference
HPMC:PEG (9:1)	25°C, 85/0% rh	6.5	(36)
SA:PA:HPMC:PEG	25°C, 85/0% rh	0.048	(36)
BW/SA:PA:MC:HPMC:PEG	25°C, 97/0% rh	0.058	(37)
HPMC	27°C, 0/85% rh	9.1	(52)
HPMC:SA (1.25:1)	27°C, 0/85% rh	0.026	(52)
Amylose	25°C, 100/0% rh	31.6	(53)
Zein:Gly (4.9:1)	21°C, 85/0% rh	9.6	(54)
Gluten:Gly (3.1:1)	21°C, 85/0% rh	53	(54)
WPI:Gly (4:1)	25°C, 0/77% rh[b]	70	(55)
WPI:BW:Sor (3.5:1.8:1)	25°C, 0/98% rh[b]	5.3	(56)
Na caseinate	25°C, 0/81% rh[b]	37	(57)
Ca caseinate:BW (1.7:1)	25°C, 0/97% rh[b]	3.6	(57)
Shellac	30°C, 0/84% rh	0.72	(58)
BW	25°C, 0/100% rh	0.021	(59)
LDPE	38°C, 90/0% rh	0.079	(60)

[a] Relative humidities are those on top and bottom sides of film (top/bottom).

[b] Corrected rh shown; HPMC = hydroxypropylmethyl cellulose, MC = methyl cellulose, SA = stearic acid, PA = palmitic acid, BW = beeswax, PEG = polyethylene glycol, WPI = whey protein isolate, Gly = glycerol, Sor = sorbitol, LDPE = low-density polyethylene.

Table 2. Oxygen Permeabilities of Selected Edible Films Compared to Synthetic Polymer Films

Film	Test Conditions	Permeability [(cm^3 · μm)/(m^2 · day · kPa)]	Reference
HPMC	24°C, 50% rh	272	(61)
MC	24°C, 50% rh	97	(61)
Collagen	RT, 63% rh	23.3	(62)
WPI:Gly (2.3:1)	23°C, 50% rh	76.1	(63)
WPI:Sor (2.3:1)	23°C, 50% rh	4.3	(63)
Shellac	29°C, 55% rh	212	(58)
BW	25°C, 0% rh	931	(59)
LDPE	23°C, 50% rh	1870	(64)
EVOH (70% VOH)	23°C, 0% rh	0.1	(64)
EVOH (70% VOH)	23°C, 95% rh	12	(64)

HPMC = hydroxypropylmethyl cellulose, MC = methyl cellulose, WPI = whey protein isolate, Gly = glycerol, Sor = sorbitol, BW = beeswax, LDPE = low-density polyethylene, EVOH = ethylene–vinyl alcohol copolymer, VOH = vinyl alcohol.

Table 3. Mechanical Properties of Selected Edible Films Compared to Synthetic Polymer Films

Film	Tensile Strength (MPa)	Elongation (%)	References
HPMC	69	10	(61)
MC	62	10	(62)
Starch	49	7	(53)
Amylose	70	23	(53)
Collagen:Cell:Gly (3.4:0.8:1)	3–11	25–50	(65)
Zein:PEG + Gly (2.6–5.9:1)	3–28	6–213	(66)
Gluten:Gly (2.5:1)	3	276	(67)
WPI:Gly (2.3:1)	14	31	(63)
LDPE	9–17	500	(68)
Polystyrene	35–55	1	(69, 70)

HPMC = hydroxypropylmethyl cellulose, MC = methyl cellulose, cell = cellulose, Gly = glycerol, PEG = polyethylene glycol, WPI = whey protein isolate, LDPE = low-density polyethylene.

for polysaccharide and protein edible films suggest that they are good lipid and aroma barriers.

Edible films appear to have tensile strength (TS) and elongation (E) values roughly between those of LDPE and polystyrene (Table 3). Plasticizer level has a dramatic effect on properties, with tensile strength decreasing and elongation increasing with increased plasticizer content. Edible film toughness values (approximately TS × E) are far below that of LDPE film commonly used to make bags and pouches. However, they are sufficient to allow many applications. Small pouches are being produced successfully from HPMC for food ingredients, and casings and

Table 4. Bacterial Inhibition Effects of Selected Antimicrobial-Incorporated Edible Films

Film Base Material	Antimicrobial Agent	Target Microorganisms	References
HPMC	Nisin	*Micrococcus luteus, Listeria innocua, Listeria monocytogenes, Staphylococus aureus*	(77, 78)
Chitosan	Chitosan	*L. innocua, L. monocytogenes*	(79)
SPI	Lauric acid, nisin	*L. monocytogenes*	(80)
SPI	Citric acid, lactic acid, malic acid, Tartaric acid, nisin	*L. monocytogenes, E. coli* O157:H7, *Salmonella gaminara*	(81)
SPI, CZ	Lysozyme, nisin, EDTA	*L. plantarum, E. coli*	(82)
WPI	*p*-Aminobenzoic acid (PABA), sorbic acid	*L. monocytogenes, E. coli* O157:H7, *S. enterica*	(83–85)
WPI	Lactoperoxidase system, Lysozyme	*L. monocytogenes*	(86, 87)
WPI	Lactoperoxidase system	*S. enterica, E. coli* O157:H7	(88, 89)

HPMC = hydroxypropylmethyl cellulose, SPI = soy protein isolate, CZ = corn zein, WPI = whey protein isolate.

wraps are being produced from collagen. Other edible film materials are also being explored for these uses. Edible films formed as coatings on food or drug products do not require the mechanical properties of stand alone films used as wraps, pouches, or casings.

MATERIAL AND APPLICATION TRENDS

Much research in recent years has been devoted to quantification of the barrier and mechanical properties of edible films produced from both old and new materials. Although most effort has been devoted to moisture and oxygen permeabilities and tensile properties, increased attention has been given to aroma-barrier (71), surface (72), optical (72, 73), and sensory (74) properties and consumer attitudes (75). Availability of such data should lead to more rational selection of edible-film and coating systems for food and drug design. Besides the various waxes, acetylated monoglycerides, shellac, zein, collagen, gelatin, MC, and HPMC in current use in food and drug products, wheat gluten, soy protein, casein, whey protein, triglycerides, fatty acids, alginate, carrageenan, aloe vera, and chitosan are among materials that have received increased attention as potentially useful materials in edible films. New coating materials being developed include water-based proteins and polysaccharides to replace ethanol-based shellac and corn zein in some applications (76). Of particular interest have been multicomponent film-forming formulations that combine the advantages of the individual components. For example, multicomponent composites have potential for combining the film-forming and oxygen-barrier properties of a polysaccharide or protein with the moisture-barrier properties of a lipid.

Considerable research is also being devoted to improving the efficiencies of forming edible films as coatings on foods and to quantification of the effects of coatings on food moisture gain or loss, food oxidation, fruit and vegetable respiration, and product gloss. Advantages can be derived from ability to extrude edible films as an alternative to solvent casting for some applications. In addition to the current uses mentioned earlier, edible film coatings have been studied or proposed for applications ranging from (a) prevention of moisture loss, browning, and microbial growth with fresh-cut fruits and vegetables to (b) prevention of moisture migration and oxidation in frozen foods.

Interest in increased food quality and shelf life has resulted in research on incorporation of antioxidants in edible films to complement their oxygen-barrier properties. Increased concern with food safety has resulted in research on the ability of edible films to provide antimicrobial compounds to the surfaces of foods. Incorporation of antimicrobials in edible films and coatings prevents their rapid diffusion into the food interior, maintaining a minimum inhibitory concentration at the food surface for longer periods of time. Table 4 shows representative antimicrobial-incorporated edible films that have shown ability to inhibit bacterial growth.

CONCLUSIONS

Edible films comprised of proteins, polysaccharides, lipids, and/or resins and other edible components have much potential for complementing conventional packaging for improvement of food and drug quality and safety. Utilization of an edible film, formed into a pouch or formed as a coating, can reduce the amount and improve the recyclability of the conventional packaging. Investigation of new materials, development of new film-forming and coating methods, and determination of film and coating properties have increased the possibilities for commercial applications. Addition of antioxidants and antimicrobials to edible films and coatings can enhance their protective function. Interest in increased food quality and safety and decreased and more sustainable packaging, along with improved edible-film properties and economics, will result in increased use of edible films in the future.

BIBLIOGRAPHY

Cited Publications

1. A. Gennadios, ed., *Protein-Based Films and Coatings*, CRC Press, Boca Raton, FL, 2002.

2. K. Khwaldia, C. Perez, S. Banon, S. Desobry, and J. Hardy, *Crit. Rev. Food Sci. Nutr.* **44**(4), 239–251 (2004).
3. R. A. Buffo and J. H. Han, in J. H. Han, ed., *Innovations in Food Packaging*, Elsevier Academic Press, New York, 2005, pp. 277–300.
4. M. Lacroix and K. Cooksey, in J. H. Han, ed., *Innovations in Food Packaging*, Elsevier Academic Press, New York, 2005, pp. 301–317.
5. Z. Liu, in J. H. Han, ed., *Innovations in Food Packaging*, Elsevier Academic Press, New York, 2005, pp. 318–337.
6. M. Lacroix and C. L. Tien, in J. H. Han, ed., *Innovations in Food Packaging*, Elsevier Academic Press, New York, 2005, pp. 338–361.
7. F. Debeaufort, J.-A. Quezada-Gallo, and A. Voilley, *Crit. Rev. Food Sci. Nutr.* **38**(4), 299–313 (1998).
8. L. Were, N. S. Hettiarachchy, and M. Coleman, *J. Food Sci.* **64**(3), 514–518 (1999).
9. Y. Wu, C. L. Weller, P. H. Hamouz, S. Cuppett, and M. Schneff, *Adv. Food Nutr. Res.* **44**, 348–394 (2002).
10. M. A. Rojas-Grau, R. Avena-Bustillos, M. Friedman, P. R. Henika, O. Martin-Belloso, and T. H. McHugh, *J. Ag. Food Chem.* **54**, 9262–9267 (2006).
11. E. A. Baldwin, M. O. Nispero-Carriedo, R. D. Hagenmaier, and R. A. Baker, *Food Technol.* **51**(6), 56–64 (1997).
12. F. Callegarin, J.-A. Q. Gallo, F. Debeaufort, and A. Voilley, *JAOCS*, **74**(10), 1183–1191 (1997).
13. T. H. Shellhammer and J. M. Krochta, in F. D. Gunstone and F. B. Padley, eds., *Lipids—Industrial Applications and Technology*, Marcel Dekker, New York, 1997, pp. 453–480.
14. V. Morillon, F. Debeaufort, G. Bond, M. Capelle, and A. Voilley, *Crit. Rev. Food Sci. Nutr.* **42**, 67–89 (2002).
15. J. W. Rhim and T. H. Shellhammer, in J. H. Han, ed., *Innovations in Food Packaging*, Elsevier Academic Press, New York, 2005, pp. 362–383.
16. M. B. Perez-Gago and J. M. Krochta, in J. H. Han, ed., *Innovations in Food Packaging*, Elsevier Academic Press, New York, 2005, pp. 384–402.
17. J. Weiss, P. Takhistov, and D. J. McClements, *J. Food Sci.* **71**(9), R107–R116 (2006).
18. J. H. Han and J. M. Krochta, *J. Food Sci.* **66**(2), 294–299 (2001).
19. S.-I. Hong and J. M. Krochta, *J. Food Eng.* **77**, 739–745 (2006).
20. R. Sothornvit and J. M. Krochta, in J. H. Han, ed., *Innovations in Food Packaging*, Elsevier Academic Press, New York, 2005, pp. 403–433.
21. V. C. H. Wan, M. S. Kim, and S.-Y. Lee, *J. Food Sci.* **70**(6), E387–E391 (2005).
22. Min, S. and J. M. Krochta, *J. Agric. Food Chem.* **55**(8), 2964–2969 (2007).
23. J. H. Han, in R. Ahvenainen, ed., *Novel Food Packaging Techniques*, Woodhead Publishing Ltd., Cambridge, UK, 2003, pp. 50–70.
24. A. Cagri, Z. Ustunol, and E. T. Ryser, *J. Food Protect.* **67**, 833–848 (2004).
25. D.-S. Cha and M. S. Chinnan, *Crit. Rev. Food Sci. Nutr.* **44**, 223–237 (2004).
26. R. D. Joerger, *Packaging Technol. Sci.* **20**(4), 231–273 (2007).
27. S. Min and J. M. Krochta, in J. H. Han, ed., *Packaging for Nonthermal Processing of Food*, IFT Press–Blackwell Publishing, Ames, IA, 2007, pp. 29–52.
28. B. Cuq, N. Gontard, and S. Guilbert, in M. Rooney, ed., *Active Food Packaging*, Blackie Academic and Professional, London, 1995, pp. 111–142.
29. S. Guilbert, in J. H. Han, ed., *Active Food Packaging*, SCE Publication and Communication Services, Winnipeg, Canada, 2002, pp. 4–10.
30. Y. Mei and Y. Zhao, *J. Agric. Food Chem.* **51**(7), 1914–1918 (2003).
31. S.-Y. Lin and J. M. Krochta, *J. Agric. Food Chem.* **53**, 5018–5023 (2005).
32. S. Guilbert and N. Gontard, in J. H. Han, ed., *Innovations in Food Packaging*, Elsevier Academic Press, New York, 2005, pp. 263–276.
33. M. B. Perez-Gago and J. M. Krochta, *J. Food Sci.* **66**(5), 705–710 (2001).
34. B. J. Bowman and C. M Ofner III, in A. Gennadios, ed., *Protein-Based Films and Coatings*, CRC Press, Boca Raton, FL, 2002, pp. 367–392.
35. A. Gennadios, in A. Gennadios, ed., *Protein-Based Films and Coatings*, CRC Press, Boca Raton, FL, 2002, pp. 393–444.
36. S. L. Kamper and O. Fennema, *J. Food Sci.* **49,** 1478–1481, 1485 (1984).
37. J. J. Kester and O. Fennema, *J. Food Sci.* **54**(6), 1383–1389 (1989).
38. W. N. Osburn, in A. Gennadios, ed., *Protein-Based Films and Coatings*, CRC Press, Boca Raton, FL, 2002, pp. 445–466.
39. V. M. Hernandez-Izquierdo and J. M. Krochta, *J. Food Sci.* **73**(2), R30–R39 (2008).
40. E. A. Baldwin and R. A. Baker, in A. Gennadios, ed., *Protein-Based Films and Coatings*, CRC Press, Boca Raton, FL, 2002, pp. 501–516.
41. G. I. Olivas and G. V. Barbosa-Canovas, *Crit. Rev. Food Sci. Nutr.* **45**(7–8), 657–670 (2005).
42. D. Lin and Y. Zhao, *Comp. Rev. Food Sci. Food Safety* **6**(3), 60–75 (2007).
43. R. A. Baker, E. A. Baldwin, and M. O. Nisperos-Carriedo, in J. M. Krochta, E. A. Baldwin, and M. O. Nisperos-Carriedo, eds., *Edible Films and Coatings to Improve Food Quality*, Technomic Publishing, Lancaster, PA, 1994, pp. 89–104.
44. T. A. Trezza and J. M. Krochta, in A. Gennadios, ed., *Protein-Based Films and Coatings*, CRC Press, Boca Raton, FL, 2002, pp. 527–550.
45. S.-Y. Lin and J. M. Krochta, *J. Food Process Eng.* **29**, 532–546 (2006).
46. A. Gennadios, M. A. Hanna, and L. B. Kurth, *Lebensm.-Wiss. u.-Technol.* **30**(4), 337–350 (1997).
47. C. N. Cutter and S. S. Sumner, in A. Gennadios, ed., *Protein-Based Films and Coatings*, CRC Press, Boca Raton, FL, 2002, pp. 467–484.
48. S. Albert and G. S. Mittal, *Food Res. Int.* **35**(2002), 445-458 (2002).
49. I. Antonova, P. K. Mallikarjunan and M. S. Chinnan, in A. Gennadios, ed., *Protein-Based Films and Coatings*, CRC Press, Boca Raton, FL, 2002, pp. 517–526.
50. K. R. Conca, in A. Gennadios, ed., *Protein-Based Films and Coatings*, CRC Press, Boca Raton, FL, 2002, pp. 551–577.
51. M. Mya Kin, W. Zhou and C. Perera, *Int. J. Food Eng.* **1**(1), 1–23 (2005).
52. R. D. Hagenmaier and P. E. Shaw, *J. Agric. Food Chem.* **38**(9), 1799–1803 (1990).

53. I. A. Wolff, H. A. Davis, J. E. Cluskey, L. J. Gundrum, and C. E. Rist, *I&EC* **43**(4), 915–919 (1951).
54. H. J. Park and M. S. Chinnan, *J. Food Eng*. **25,** 497–507 (1995).
55. T. H. McHugh, J. F. Aujard, and J. M. Krochta, *J. Food Sci*. **59**(2), 416–419, 423 (1994).
56. T. H. McHugh and J. M. Krochta, *J. Food Process. Preserv.* **18,** 173–188 (1994).
57. R. J. Avena-Bustillos and J. M. Krochta, *J. Food Sci*. **58**(4), 904–907 (1993).
58. R. D. Hagenmaier and P. E. Shaw, *J. Agric. Food Chem*. **39**(5), 825–829 (1991).
59. I. K. Greener, *Physical Properties of Edible Films and Their Components*, Ph.D. thesis, University of Wisconsin, Madison, WI, 1992.
60. S. A. Smith, "Polyethylene, Low Density" in M. Bakker, ed., *The Wiley Encyclopedia of Packaging Technology*, Wiley, New York, 1986.
61. Anonymous, *A Food Technologist's Guide to Methocel Premium Food Gums*, The Dow Chemical Co., Midland, MI, 1990.
62. E. R. Lieberman and S. G. Gilbert, *J. Polym. Sci*. **Symp. No. 41,** 33–43 (1973).
63. T. H. McHugh and J. M. Krochta, *J. Agric. Food Chem*. **42**(4), 841–845 (1994).
64. M. Salame, in M. Bakker, ed., *The Wiley Encyclopedia of Packaging Technology*, Wiley, New York, 1986.
65. L. L. Hood, in A. M. Pearson, T. R. Dutson, and A. J. Bailey, eds., *Advances in Meat Research*, Van Nostrand Reinhold, New York, 1987.
66. B. L. Butler and P. J. Vergano, ASAE Paper No. 946551, ASAE, St. Joseph, MI, 1994.
67. A. Gennadios, C. L. Weller, and R. F. Testin, ASAE Paper No. 90-6504, ASAE, St. Joseph, MI, 1990.
68. J. H. Briston, in M. Bakker, ed., *The Wiley Encyclopedia of Packaging Technology*, Wiley, New York, 1986.
69. J. S. Houston, in M. Bakker, ed., *The Wiley Encyclopedia of Packaging Technology*, Wiley, New York, 1986.
70. J. F. Hanlon, *Handbook of Package Engineering*, Technomic Publishing, Lancaster, PA, 1992.
71. K. S. Miller and J. M. Krochta, *Trends Food Sci. & Technol*. **8**, 228–237 (1997).
72. S.-I. Hong, J. H. Han, and J. M. Krochta, *J. Appl. Polymer Sci*. **92**, 335–343 (2004).
73. K. L. Dangaran and J. M. Krochta, *Int. J. Food Sci. Technol*. **42**, 1094–1100 (2007).
74. Y. Zhao and M. McDaniel, in J. H. Han, ed., *Innovations in Food Packaging*, Elsevier Academic Press, New York, 2005, pp. 434–454.
75. V. C. H. Wan, C. M. Lee and S.-Y. Lee, *J. Sensory Studies* **22**(3), 353–366 (2007).
76. K. L. Dangaran and J. M. Krochta, *The Manufacturing Confectioner* **83**(1), 61–65 (2003).
77. V. Coma, I. Sebti, P. Pardon, A. Deschamps, and H. Pichavant, *J. Food Prot*. **64,** 470–475 (2001).
78. I. Sebti, F. Ham-Pichavant, and V. Coma, *J. Agric. Food Chem*. **50,** 4290–4294 (2002).
79. V. Coma, A. Martial-Gros, S. Garreau, A. Copinet, F. Salin, and A. Deschamps, *J. Food Sci*. **67,** 1162–1169 (2002).
80. P. L. Dawson, G. D. Carl, J. C. Acton, and I. Y. Han, *Poultry Sci*. **81,** 721–726 (2002).
81. S. Eswaranandam, N. S. Hettiarachchy, and M. G. Johnson, *J. Food Sci*. **69,** FMS79–FMS84 (2004).
82. T. Padgett, I. Y. Han, and P. L. Dawson, *J. Food Prot*. **61,** 1330–1335 (1998).
83. A. Cagri, Z. Ustunol, and E. T. Ryser, *J. Food Sci*. **66,** 865–870 (2001).
84. A. Cagri, Z. Ustunol, and E. T. Ryser, *J. Food Sci*. **67,** 2317–2324 (2002).
85. A. Cagri, Z. Ustunol, W. Osburn, and E. T. Ryser, *J. Food Sci*. **68,** 291–299 (2003).
86. S. Min, L. J. Harris, and J. M. Krochta, *J. Food Sci*. **70,** M317–M324 (2005).
87. S. Min, L. J. Harris, J. H. Han, and J. M. Krochta, *J. Food Prot*. **68,** 2317–2325 (2005).
88. S. Min, L. J. Harris, and J. M. Krochta, *J. Food Sci*. **70,** M332–M338 (2005).
89. S. Min, L. J. Harris and J. M. Krochta, *J. Food Prot*. **69,** 784–793 (2006).

Further Reading

R. Ahvenainen, P. Myllarinen, and K. Poutanen, *European Food & Drink Review*, **Summer**, 73, 75, 77–80 (1997).

M. Anker, *Edible and Biodegradable Films and Coatings for Food Packaging—A Literature Review*, SIK, Gotegorg, Sweden, 1996.

I. Arvanitoyannis and L. G. M. Gorris, in F. A. R. Oliveira, J. C. Oliveira, M. E. Hendrickx, D. Knorr, and L. G. M. Gorris, eds., *Processing Foods—Quality Optimization and Process Assessment*, CRC Press, Boca Raton, FL, 1999, pp. 357–370.

E. A. Baldwin, in M. S. Rahman, ed., *Handbook of Food Preservation*, Marcel Dekker, New York, 1999, pp. 577–609.

S. Chapman and L. Potter, *Edible Films and Coatings: A Review*, Campden & Chorleywood Food Research Association Group, Chipping Campden, UK, 2004.

F. Debeaufort, J.-A. Quezada-Gallo and A. Voilley, *Crit. Rev. Food Sci. Nutr.* **38**(4), 299–313 (1998).

N. Gontard and S. Guilbert, in M. Mathlouthi, ed., *Food Packaging and Preservation*, Blackie Academic & Professional, London, 1994, pp. 159–181.

S. Guilbert, in M. Mathlouthi, ed., *Food Packaging and Preservation*, Elsevier Applied Science Publishers, New York, 1986, pp. 371–394.

S. Guilbert and N. Gontard, in P. Ackermann, M. Jägerstad, and T. Ohlsson, eds., *Foods and Packaging Materials—Chemical Interactions*, The Royal Society of Chemistry, Cambridge, England, 1995, pp. 159–168.

S. Guilbert, B. Cuq and N. Gontard, *Food Add. Contam*. **14**(6–7), 741–751 (1997).

S. Guilbert and N. Gontard, in J. H. Han, ed., *Innovations in Food Packaging*, Elsevier Academic Press, New York, 2005, pp. 263–276.

J. H. Han and A. Gennadios, in J. H. Han, ed., *Innovations in Food Packaging*, Elsevier Academic Press, New York, 2005, pp. 239–262.

J. J. Kester and O. R. Fennema, *J. Food Sci.* **40**(12), 47–59 (1986).

J. M. Krochta, E. A. Baldwin, and M. Nisperos-Carriedo, eds., *Edible Coatings and Films to Improve Food Quality*, Technomic Publishing, Lancaster, PA, 1994.

J. M. Krochta, in S. Damodaran and A. Paaraf, eds., *Food Proteins and their Applications in Foods*, Marcel Dekker, New York, 1997, pp. 529–549.

J. M. Krochta and C. L. C. De Mulder-Johnston, *Food Technol.*, **51**(2), 61–74 (1997).

M. O. Martin-Polo, in G. V. Barbosa-Canovas and J. Welti-Chanes, eds., *Food Preservation by Moisture Control*, Technomic Publishing, Lancaster, PA, 1995.

A. Nussinovitch, *Leatherhead Food RA Food Industry Journal*, **1**(3), 174–188 (1998).

A. Nussinovitch, *Water Soluble Polymer Applications in Foods*, Blackwell Science, Oxford, UK, 1995.

C. Quinn, *Food Manufacture*, **Aug. 28**, 42 (2007).

FILM, FLEXIBLE PVC

Anil G. Doshi
Bordon, Inc., Resinite Division,
North Andover, Massachusetts

Flexible poly(vinyl chloride) (PVC) film is well established as a versatile, cost-effective packaging material. The ability of PVC to accept and respond to a range of additives makes it a unique and popular packaging material. A variety of production processes are used to manufacture PVC film for a variety of applications. Film can be produced by blown or cast extrusion, calendaring, or solution casting in thicknesses ranging from 0.0004 in. to >0.004 in. It can be produced as a highly flexible, permeable stretch film or an oriented shrink film.

PVC resins, the principal component of PVC films, are made by polymerizing vinyl chloride monomer using suspension, emulsion, or bulk polymerization. PVC resin is a free-flowing white powder. Of the approximately 11 billion pounds of PVC resin produced in the United States in 1994, about half a billion pounds went into packaging applications (1). Flexible PVC packaging film applications are estimated to have consumed about 200×10^6 lb of PVC resin.

COMPOSITION

The ingredients used in manufacturing of flexible PVC films depend on the intended applications. The selection of the proper additive type and level are key parameters that influence the characteristics of the PVC packaging film. Food packaging, the single largest application for flexible PVC films, requires the use of ingredients sanctioned by the Food & Drug Administration (FDA). Non-food-packaging applications offer a broader range of additive selection.

RESIN

Suspension polymerized PVC resin, having a K value of about 66–68, is typically used to produce flexible PVC packaging films. The resin is usually classified as film-grade, indicating good absorptivity, a very low level of gels and contamination, and very good heat stability.

PLASTICIZER

Plasticizers are the major additives, and their prime purpose is to impart flexibility (2). Essentially, all PVC packaging films contain one or more plasticizers. Food-packaging applications require the use of only FDA-sanctioned plasticizer. Because of the balance of plasticizing efficiency, cost, and availability, adipate plasticizers are most commonly used. For non-food-packaging applications, the plasticizer choice is vast, but the majority that are used are nontoxic and often FDA-sanctioned. Phthalate and adipate esters are dominant in such applications. Most flexible PVC film formulations also use an oil epoxide, typically epoxidized soybean oil. This additive, frequently called a *secondary plasticizer*, imparts flexibility as well as considerable heat stability during processing.

HEAT STABILIZERS

The main function of a heat stabilizer is to prevent discoloration during processing (3). Heat-stabilizer selection for flexible PVC film is a complex matter, dictated by the application, manufacturing process and interaction with other additives. For food-contact applications, stearates of calcium, magnesium, and zinc are most often used. They are relatively inefficient and are often boosted by oil epoxies and phosphites. For nonfood applications, organometallic salts of barium and zinc are popular and offer excellent heat stability.

LUBRICANTS

Lubricants are added to PVC compounds to facilitate processing and control processing rate (4). The effectiveness of lubricants depends on their marginal or complete insolubility in PVC compounds. External lubricants reduce sticking of the melt to hot-metal surfaces; montan ester waxes, paraffins, and low-molecular-weight polyethylenes are commonly used. Internal lubricants affect the frictional properties of the resin particle surface during processing and thus control the fusion rate of the resin. Fatty acids, esters, and metallic soaps are frequently used.

OTHER COMPONENTS

Most other components of a flexible PVC film are added to impart a specific physical property. Esters of multifunctional alcohols, with the proper hydrophobic–hydrophilic balance, are added at low levels to impart antifog and antistatic properties. Inorganic additives such as clay or talc, as well as organic additives such as amides, can be added for slip and antiblock properties. Pigments may be added for tinting and coloring.

METHODS OF MANUFACTURE

Essentially all flexible PVC packaging films are produced from externally plasticized resin containing other additives; this is extruded through a film-forming die. Two; basic methods are used: blown-film extrusion and slot-die-cast extrusion. The blown film process dominates PVC packaging film production.

PVC resin is blended with selected additives using a high-intensity mixer. Mixing time varies with the actual formulation used as well as the equipment. Mixing is complete when the compound (blend of resin and additives) is once again dry and free-flowing and the additives are completely dispersed. The compound is typically heated, through shear energy, to 230–260°F and then discharged to a ribbon blender to be further mixed and cooled to the desired temperature. This compound is often referred to as *dry blend*.

Dry blend may be pelletized for later use or fed directly to a blown-film extruder. Equipment needs to be expressly designed for the heat-sensitive PVC compound, requiring streamlined flow with no "dead spots." The film is wound using surface or center winders and sold in roll form, in a variety of widths. Flexible PVC film can also be preferentially or biaxially oriented to provide shrink characteristics. This is usually accomplished by using a two-roll orienting unit or bubble inflation under controlled temperatures and strain rates. Tentering equipment can also be used, usually with slot-die-cast extrusion equipment.

MARKETS

Food Packaging

Most flexible PVC film is used for packaging food products, particularly fresh red meat. Properly formulated flexible PVC stretch films features high oxygen permeability, toughness, resilience, and clarity, making it ideal for in-store wrapping of fresh meat. Packaging of fresh fruits and vegetables in flexible PVC film is primarily performed in-store. Films are formulated for high gas transmission rates and provide excellent shelf life to the respiring produce, including sensitive mushrooms.

Packaging of chilled, tray-packed poultry parts is often done with flexible PVC film. The toughness and resilience of PVC film, plus its good heat sealability in a wet environment, make it a material of choice in this centralized packaging application.

The ability to be readily printed with solvent- and water-based inks, without the need for any special surface treatment, have figured prominently in both meat and poultry packaging, for brand identification and merchandising. A recent development has been the imprinting of a safe handling label, mandated by USDA, on the film itself. This ensures 100% compliance at the store level on all packages of raw meat.

Institutional packaging is the second-largest food-wrap application for flexible PVC film. These films, in a thickness range of 0.4–0.6 mil (10–15 μm), are wound on rolls and placed in dispenser boxes with a cutter blade. They are used in institutional kitchens, cafeterias, restaurants, and caterers to overwrap food trays, salads, glassware, and utensils. The films feature excellent cling, clarity, stretch, and dispensability.

Properly formulated flexible PVC films are also used for frozen-food storage, as well as in boxed beef operations and in-store bakeries and delicatessens.

Table 1. Typical Properties of 1-mil (25.4 μm) Flexible PVC Film

Property	ASTM Test Method	Flexible PVC Meat Package Stretch Film	Flexible PVC Dispenser Film	Flexible PVC Shrink Bundle Film
Specific gravity	D1505	1.23	1.27	1.3
Yield, in.^{2}/(lb · mil) [m^2/(kg · mm)]		22,400 [1254]	21,600 [1210]	21,400 [1198]
Haze, %	D1003	1.2	1.0	2.5
Tensile strength, psi (MPa)	D882 MD[a]	5000 (34.5)	5500 (37.9)	15,000 (103)
	TD[b]	4500 (31)	5500 (37.9)	5500 (37.9)
Elongation, %	D882 MD	275	300	90
	TD	375	325	275
Tear strength, gf/mil (N/mm)	D1922 MD	300 (116)	325 (125)	335 (129)
	TD	450 (175)	500 (193)	575 (222)
Change in linear dimensions at 212°F (100°C) for 30 min, %	D1204			
	MD	NA[c]	NA	45
	TD			10
Service temperature		–20–150	0–150	10–150
°F (°C), range		(–29–66)	(–18–66)	(–12–66)
Heat-seal temperature		290–320	290–340	280–330
°F (°C), range		(143–160)	(143–171)	(138–166)
Oxygen permeability, (cm^3 · mil)/(100 in.^{2} · day · atm) [(cm^3 · μm)/(m^2 · day · kPa)] 73°F (23°C), 50% rh	D1434	860 [3342]	340 [1321]	NA
Water-vapor transmission rate, (g · mil)/100 in.^{2} · day) [(g · mm)/(m^2 · day)], 100°F (38°C), 90% rh		16 [6.3]	10 [3.9]	NA

[a] MD, machine direction.

[b] TD, transverse direction.

[c] NA, not available.

Nonfood Packaging

Oriented PVC films are widely used to overwrap boxed goods such as games and toys. One of the newer applications for oriented, flexible PVC is in the bundling of multiple aseptic packs. Ranging in thickness from 0.6 to 1.2 mils (15 to 30 μm), such films provide high shrink at low temperatures, resulting in a firm unitized pack, without any distortions, offering merchandising appeal. Heavy-gauge flexible PVC, 2–6 mils (51–152 μm), has been used as a component of windowed cards for many years. Toughness, formability, good dielectric sealability, and merchandisability are properties that lend themselves to the packaging of hardware, flashlights, and automobile parts.

Table 1 lists typical physical properties of the main types of flexible PVC packaging films.

BIBLIOGRAPHY

1. *Modern Plast.* **00**, 64 (1994).
2. J. K. Sears and J. R. Darby, *The Technology of Plasticizers*, John Wiley & Sons, New York 1982, pp. 35, 305.
3. H. A. Sarvetnick, *Polyvinyl Chloride*, Van Nostrand Reinhold, New York, 1969, p. 88.
4. *Ibid.*, p. 1214.

FILM, FLUOROPOLYMER

A. B. Robertson
Allied Fibers and Plastics
Updated by Staff

INTRODUCTION

Fluoropolymers are a family of materials that have a general paraffinic structure with some or all of the hydrogen atoms replaced by fluorine. All members of the fluoropolymer family are available in film form, but only Aclar film is used extensively in specialty packaging applications. Honeywell is a supplier of Aclar film. Some of its useful properties are extremely low transmission of moisture vapor and relatively low transmission of other gases, inertness to most chemicals, outstanding resistance to forces that cause weathering (UV radiation and ozone), transparency, and useful mechanical properties from cryogenic temperatures to temperatures as high as 300°F (150°C). The initial interest in Aclar film was for packaging military hardware, but its water-vapor-transmission properties led to interest by pharmaceutical companies for packaging moisture sensitive products (see Pharmaceutical Packaging). Available in several grades, Aclar is more expensive than most thermoplastic films.

COMPOSITION AND EXTRUSION

Aclar is a trade name (Honeywell) for film made from Aclon, a modified PCTFE (polychlorotrifluoroethylene) fluoropolymer that contains greater than 95 wt% chlorotrifluoroethylene (1). It is converted to film by melt extrusion (see Extrusion). It is a difficult thermoplastic to extrude because it has a very high melt viscosity and a low, critical, shear rate for melt fracture. The commercially available films have different machine-direction and cross-direction properties because some orientation is induced during fabrication. Aclar 22 films have good tear strength and can be used unsupported as well as in thermoformable laminates (see Laminating; Thermoforming). Aclar 33, made from a different copolymer, offers superior dimensional stability and resistance to chemicals and water vapor transmission.

FABRICATION

Aclar film can be heat-sealed (see Sealing, Heat), laminated, printed, thermoformed, metallized (see Metallizing), and sterilized (see Healthcare Packaging). The unsupported and laminated varieties can be handled and processed on most common converting and packaging machines. Unsupported and laminated films can be heat-sealed by machines that employ constant heat, thermal impulse, radiofrequency, or ultrasonic energy. In some cases, special precautions must be observed.

Most Aclar film for packaging is converted to some type of laminate. It can be laminated to paper, polyethylene (low and medium density), and to preprimed PVC, aluminum foil, polyester, nylon 6, and cellophane. A typical extrusion lamination (see Extrusion Coating; Multilayer Flexible Packaging) uses molten LDPE as an adhesive between the fluoropolymer film and one of the substrates listed above. An MDPE tie layer produces a laminate with better properties at elevated temperatures. Laminates can also be produced by adhesive lamination. In that case the Aclar film should be preprimed. Preprimed film can be bonded to polymeric substrates with two-component urethane adhesives. The adhesive system is applied in water or organic solvent, and the liquid is evaporated in an oven. Because of its low surface energy, Aclar film does not have acceptable bond strength to most substrates unless the film is corona-treated (see Surface Modification) to increase its surface energy. With corona treatment, the film can be laminated to aluminum and steel foils by using an epoxy-polyamide curing adhesive.

All grades and gauges can be thermoformed. Typical thermoforming temperatures are 350–400°F (175–205°C). It is done close to, but not above, the melting point of the film. One of the important uses of Aclar film is the use of thermoformed laminated Aclar 22A/PVC in blister packs for ethical drugs. Heavier gauges (5–10 mil or 127–254 μm) of unsupported Aclar film can be thermoformed using ceramic or quartz heating units. Thermoformed film and laminates should be quick-quenched to maintain low crystallinity and prevent brittleness.

Table 1. Approximate Comparative Transmission Rates

		O_2[b]	N_2[b]	CO_2[b]
Films	Moisture[a] Vapor, $g \cdot mil/(100\,in.^2 \cdot d)$ $[g \cdot mm/(m^2 \cdot d)]$	$cm^3 \cdot mil/(100\,in.^2 \cdot d \cdot atm)$ $[cm^3 \cdot \mu m/(m^2 \cdot d \cdot kPa)]$		
Aclar 33C	0.025 [0.01]	7 [27.2]		16 [62.2]
Aclar 22C	0.045 [0.018]	15 [58.3]	2.5 [9.7]	40 [155]
Aclar 22A	0.041 [0.016]	12 [46.6]	2.5 [9.7]	30 [117]
PVDC	0.20 [0.78]	0.8–1.0 [3.1–3.9]	0.12–0.16 [0.47–0.62]	3.0–4.6 [11.7–17.9]
Polyethylene				
Low-density	1.0–1.5 [0.4–0.6]	300–700 [1166–2720]	130–260 [505–1010]	1400–2800 [5440–10,879]
Medium-density	0.4–1.0 [0.16–0.4]	170–500 [661–1943]	100–120 [389–466]	500–1500 [1943–5828]
High-density	0.3–0.7 [0.12–0.28]	34–250 [132–971]	40–55 [155–214]	250–720 [971–2798]
Nylon-6	19–20 [7.5–7.9]	2.6 [10.1]	0.9 [3.5]	9.7 [37.7]
Fluorinated ethylene polypropylene (FEP)	0.4–0.5 [0.16–0.20]	750–1000 [2914–3886]	300–400 [1166–1554]	1600–2000 [6217–7771]
Poly(vinyl fluoride) (PVF)	2.0–3.2 [0.79–1.3]	3.0–3.3 [11.7–12.8]	0.25–0.70 [1.0–2.7]	11–15 [42.7–58.3]
Polyester	1.0–3.0 [0.4–1.2]	4.0–8.0 [15.5–31]	0.7–1.0 [2.7–3.9]	12–25 [46.6–97.1]

[a] ASTME 96 at 100°F (38°C) and 90% rh.

[b] Dry gas at room temperature.

Most applications require transparency, but Aclar film can be metallized with aluminum. Corona-treated film can be printed with polyamide-based inks (see Inks). Best results are obtained if the film is corona-treated in-line prior to printing.

PROPERTIES

Aclar film can be sterilized with steam and with ethylene oxide (ETO) systems. Radiation sterilization of Aclar film in the cobalt-60 dosage range of $2.5\text{–}5 \times 10^6$ rad ($2.5\text{–}5 \times 10^4$ Gy) have been tested. Tests at 1×10^6 rad (1×10^4 Gy) (2) indicate that little or no property loss occurs at that dosage (see Radiation, Effects of). Aclar films have outstanding barrier properties to water vapor and to other gases (see Barrier Polymers). Properties at a wide variety of temperatures can be determined by a method that is described in Ref. (3). Table 1 compares transmission rates of Aclar films with a number of other films.

Aclar film is inert to acids, bases, strong oxidizing agents, and most organic chemicals. It exhibits excellent dimensional stability in inorganics, including water, salt solutions, strong acids, and bases. Some polar organics, especially hot polar solvents, diffuse into Aclar film and act as a plasticizer. These solvents cause it to become more flexible and sometimes hazy. There are no known solvents that dissolve the film at temperatures up to 250° (120°C). Mechanical properties are usually not an important factor in packaging applications because the important mechanical properties are those of the laminates. Aclar films are not particularly strong or tough, but they have outstanding abrasion resistance, important in clean-room packaging of military hardware.

APPLICATIONS

Aclar film is used in military, pharmaceutical, electrical/electronic, and aircraft/aerospace component applications. It serves as a key component of a transparent laminated barrier construction that meets the requirements of the MIL-F-22191, Type I specification (see Military Packaging). This laminate is used for packaging moisture-sensitive military hardware. Aclar also passes the liquid oxygen (LOx) compatibility impact test under NASA specification MSFC-106A. It is used for packaging components designed for service in liquid oxygen and other oxidizers used in spacecraft applications. Gas sampling bags made of Aclar are used on the Space Station (4).

The major commercial applications are in packaging moisture-sensitive drugs. Aclar Flex 380 exhibits 10 times the barrier protection of other films. It can reduce medical errors and streamline operations by streamlining quality control, product inspection, labeling, and product identification (1). Laminates are used for rigid and semirigid blister packs, lidding, unit-dose packages, and aseptic peel-packs. They are also used in medical applications—for example, as an overwrap for plastic containers for biomedical specimens and/or pathology specimens. This application requires a film that is sterilizable by heat and ETO and that does not absorb or denature biological fluids. Aclar film laminates are used in oxygen-rich environments for packaging items in liquid nitrogen (4).

SAFETY CONSIDERATIONS

Aclar film is inert and nontoxic and safe to handle at ordinary temperatures. It is thermally stable for up to one hour at temperatures as high as 446°F (230°C). It can be processed for a few seconds at temperatures as high as 554°F (290°C), provided that the machine is ventilated with an exhaust fan. Vacuum forming is typically done at 374°F (190°C) with exhaust-fan ventilation. If Aclar film is continuously processed at temperatures above 446°F (230°C), the processing machinery should be equipped with ventilating equipment or the work should be performed in an exhaust hood. The film should not be disposed of by burning. Exposed to flame, it degrades to fluorochlorocarbon gases, some of which are toxic. In the presence of oxygen and olefins or polyolefins, it may form HF and/or HCl when exposed to flame. These acids are toxic if inhaled and are corrosive to metals (5).

BIBLIOGRAPHY

"Film, Fluoropolymer" in M. Bakker, ed., *The Wiley Encyclopedia of Packaging Technology*, 1st edition, A. B. Robertson and K. R. Habermann, John Wiley & Sons, New York, 1986, pp. 311–313; 2nd edition, A. J. Brody and K. S. Marsh, eds., 1977, pp. 403–405.

Cited Publications

1. "Aclar Homopolymers, www.honeywell.com, accessed August 2008.
2. King, Broadway, and Pallinchak, "The Effect of Nuclear Radiation on Elastomeric and Plastic Components and Materials," Report 21, Addendum AD 264890, Radiation Effects Information Center (now defunct), Battelle Memorial Institute, National Technical Information Series of the Department of Commerce, August 31, 1964.
3. N. Vanderkooi and M. Ridell, *Mater. Eng.* 58 (March 1977).
4. "Aclar Films, Copolymers 22/33," www.texastechnologies.com/aclar, accessed August 2008.
5. *Aclar Homopolymer Films, Material Safety Data Sheet*, www.honeywell.com, January 2004.

FILM, HIGH-DENSITY POLYETHYLENE

R. H. Nurse
J. S. Siebenaller
American Hoechst Corporation
Updated by Staff

INTRODUCTION

High-density polyethylene, (HDPE) film has been used for a variety of specialty applications since the mid-1950s, but it was not until the 1970s that significant growth began. Today polyethylene is the third largest resin commodity after poly(vinyl chloride) and polypropylene (1). Plants using Ziegler and chromium catalysts to make film reported production of 450 thousand tons/year. Japan and Asia use twice as much film as the United States and Western Europe (1). Much of this film is used for grocery sacks and merchandise bags and a few other nonpackaging applications. HDPE film is also used for a variety of packaging uses that require the unique property profile that HDPE films provide.

In packaging applications, HDPE films compete with LDPE and LDPE/LLDPE blends, cast PP (see also Film, Non-oriented Polypropylene), and oriented PP (see Film, Oriented Polypropylene). These polyolefin films have many properties in common, but with some significant differences in degree. Typical HDPE film properties are shown in Table 1.

HDPE, by virtue of its higher density, exhibits higher tensile strength, lower WVTR, and greater stiffness than LDPE or LLDPE/LDPE blends. PP films can offer higher tensile strength because of a higher degree of crystallinity and the ability to be biaxially oriented. PP films also have excellent optical properties due to fine crystal structure and biaxial orientation behavior. LDPE and LLDPE/LDPE blends exhibit good clarity due to their lower degree of crystallinity. HDPE is the most opaque of the three polyolefin types. This is an advantage if opacity is desired, because a relatively low amount of pigment is required to achieve that opacity (see Colorants). LLDPE and LLDPE/LDPE blends exhibit higher tendency to elongation under load because of their lower crystallinity and, hence, lower tensile modulus. This property is useful in stretch-wrap applications (see Films, Stretch), but it is a disadvantage if low elongation is required (as in handled grocery sacks). It is important to recognize, however, that the properties of all polyolefin films can be tailored during polymerization or through the use of blends or coextrusions.

PACKAGING APPLICATIONS

Two of the most important applications for HDPE film are retail grocery sacks and merchandise bags. HDPE films have replaced large quantities of glassine for packaging cereals, crackers, and snack foods. In these applications, clarity is not desirable, and the translucency or opacity of HDPE films is an advantage. They are used in conjunction with bag-in-box vertical form/fill/seal equipment (see Bag-in-Box, Dry Product; Form/Fill/Seal, Vertical). Rubber-modified HDPE film is used for medical overwraps. HDPE films are also used to produce shipping sacks. Heavy-gauge coextrusions of HDPE with low-density polyethylene are used for all-plastic shipping sacks (see Bags, Heavy-Duty Plastic), and thin-gauge HDPE films are used as moisture-barrier plies in multiwall bags (see Bags, Multiwall). Very thin embossed HDPE film is also used as a replacement for tissue paper; and without embossing, it is used as an inner wrap for delicatessen products. HDPE film is also used for foods that are heated in the package (boil-in-bag items) (2).

FILM POLYMERS

Three principal polymer properties can be adjusted to tailor the performance of HDPE films (see Polyethylene, High-Density). Density plays the most significant role as a measure of the degree of polymer crystallinity. Crystallinity has a direct influence on tensile strength, WVTR, hardness, opacity, and coefficient of friction. HDPE film resins are 0.941–0.965 g/cm^3, depending on comonomer type and

Table 1. Typical Properties of High-Density Polyethylene Film, 1 mil (25.4 μm)[a]

Property		ASTM Test Method	HDPE-HMW (Blown)	HDPE-MMW (Blown)
Specific gravity	D1505		0.950	0.950
Yield, in.^{2}/(lb $\cdot$ mil) [m^2/(kg $\cdot$ m)]			29,200 [1635]	29,200 [1635]
Haze, %	D1003		78	78
Tensile strength, psi (MPa)	D882	MD/XD, yield	5200 (35.9)/5000 (34.5)	4600 (31.7)/4400 (30.3)
		MD/XD, failure	7500 (51.7)/7000 (48.3)	6500 (44.8)/6100 (43.1)
Elongation, %	D882	MD	450	350
		XD	500	550
Tensile modulus, 1% secant, psi (MPa)		MD	125,000 (862)	120,000 (828)
		XD	130,000 (897)	125,000 (862)
Tear strength, gf/mil (N/mm)	D1922	Propagating, MD/XD	20 (7.7)/150 (57.9)	15 (5.8)/100 (38.6)
Service temperature range, °F(°C)			200–250 (93–121)	200–250 (93–121)
WVTR, g $\cdot$ mil/(100 in.^{2} $\cdot$ day) [cm^3 $\cdot$ mm/(m^2 $\cdot$ day)]; 38°C, 98% rh			0.8 [0.3]	0.8 [0.3]
COF, face-to-face	D1894		0.3	0.3

[a] COF = coefficient of friction; MD, XD = machine, cross-direction.

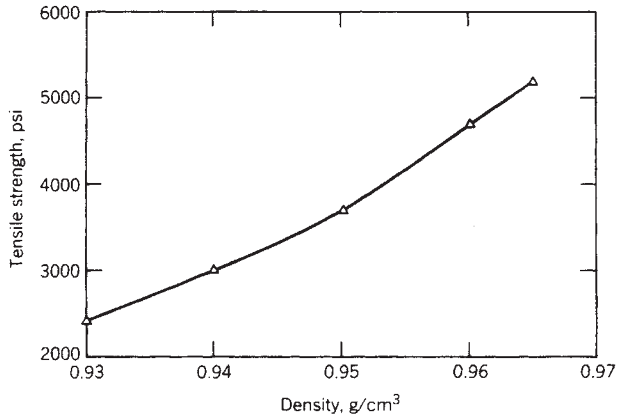

Figure 1. Influence of density on tensile strength. To convert psi to MPa, divide by 145.

concentration. The most common comonomers are butene and hexene. As density increases, tensile modulus and tensile strength increase as well (see Figure 1). The same is true for film hardness and, to some extent, for water-vapor transmission rate (see Figure 2).

The molecular weight (MW) of the polymer has a significant influence on toughness and impact strength. For many years, HDPE films were made from medium-molecular-weight (MMW) or low-molecular-weight (LMW) polymers, for applications that required only medium-to-low toughness. The development of high-molecular-weight (HMW) polymers changed the range of applications available to HDPE films (3). The influence of MW on film impact strength is significant (impact resistance increases with molecular weight), but the processing of the resin is critical as well (4).

Molecular-weight distribution (MWD) is the third parameter influencing resin design, because it influences processing. Broad-MWD resins are easier to process than narrow-MWD resins. The ability to process HDPE at economic speeds and at controlled melt temperatures requires careful resin design. High-flow LMW film resins can be narrow or medium in MWD and still be extruded at high output rates without excessive shear that would degrade the polymer. MMW resins require some careful control for high-speed extrusion (5). The use of HMW-HDPE film resins requires extreme MWD control to ensure both acceptable output rates and control of melt temperatures. Thermal degradation must be avoided to maintain the long molecular chains necessary to impart high impact strengths. This MWD has been achieved in some cases by bimodal polymerization technology. The polymer chemist has certain secondary design criteria available to fine-tune the HDPE film polymers. These include special process stabilizers, high-heat stabilizers, antistatic agents (see Additives, Plastics), different comonomer types, and the physical form in which the resins are supplied (i.e., pellets or coarse powders).

FILM MANUFACTURING

Chromium-based catalysts can be used quite widely for production of HDPE grades, but some of the best films, in terms of mechanical properties and extrusion rates, are bimodal resins made from Ziegler catalysts passing through two or more reaction zones. Most recently, metallocene resins have been used to produce extremely high clarity resins, despite the high density (6).

HDPE films are produced using two principal extrusion techniques: blown and cast (see Extrusion). The most common is blown-film extrusion, in which $1\frac{1}{2}$ – to 6-in. (3.8 – to 15.2-cm) extruders extrude the resin in tubular form. The tube is cooled, collapsed to a flat film, and either wound in tubular form or slit and folded. The properties of blown HDPE film are highly dependent on the type of resins used and the design of the extrusion equipment employed (6). MMW-HDPE films, monolayer or coextruded, are generally made with extruders in the $2\frac{1}{2}$ – to 6-in. (6.4– to 15.2-cm) diameter range operating at relatively low screw speeds yet achieving high output at moderate melt temperatures. The screw *L:D* ratio is normally 25–30 and the barrel design is normally smooth. These conventional extruders do not allow full

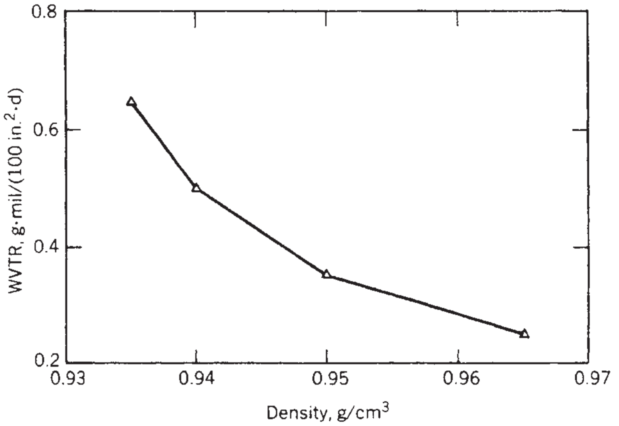

Figure 2. Influence of density on WVTR. To convert g · mil/(100 in.^{2} · d) to g · mm/(m^2 · d), multiply by 0.3937.

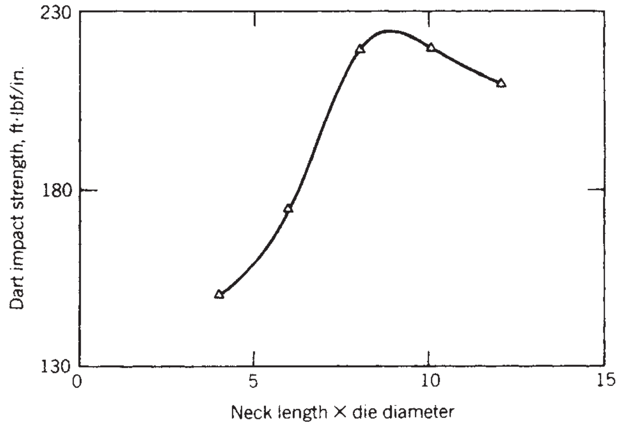

Figure 3. Effect of neck length on film toughness. To convert ft · lbf/in. to J/m, multiply by 53.38 (see ASTM D256).

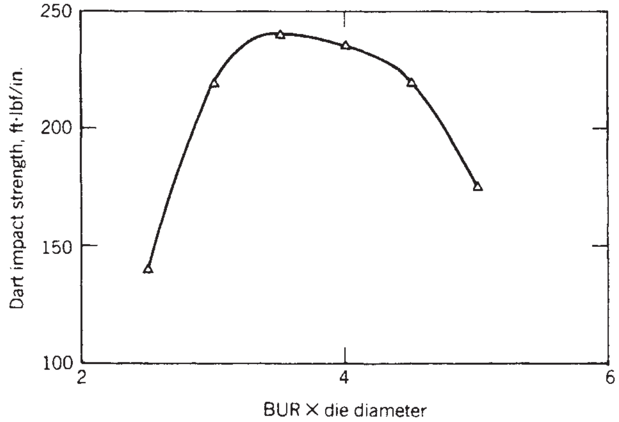

Figure 4. Effect of blowup ratio (BUR) on film toughness. To convert ft · lbf/in. to J/M, multiply by 53.38.

development of the resin capability in terms of optimum toughness, but they serve a useful role in providing high outputs at economic rates for applications which do not require the full–strength potential of HDPE.

In contrast, other designs for HMW–HDPE film extrusion are based on forced-feed grooved sections. They operate at high screw speed, using relatively short (18–21) *L:D* ratios. These extruders achieve high output with the minimum residence time required to produce a homogeneous melt for the subsequent blowing and orientation processes necessary to develop the optimum toughness and tensile strength. For HMW film it is imperative to use a relatively long neck length (frost height) (6–10 × die diameter) and high blowup ratio (3–5 × die diameter) to achieve balanced properties. The influence of these processing parameters on the optimum toughness of the film is illustrated in Figures 3 and 4.

LMW-HDPE films are generally made with cast-film technology, in which free-flowing polymer melts are extruded from flat dies on to substrates or chill rolls. These polymers do not have the melt strength necessary for the blown film process and their applications are limited.

BIBLIOGRAPHY

R. H. Nurse and J. S. Siebenaller, "Film, High Density Polyethylene" in M. Bakker, ed., *The Wiley Encyclopedia of Packaging Technology*, 1st edition., John Wiley & Sons, New York, 1986, pp. 313–315; 2nd edition, A. J. Brody and K. S. Marsh, eds., 1997, pp. 405–407.

Cited Publications

1. A. Borruso, "Polyethylene, High Density" in *Chemical Economics Handbook,* SRI Consulting, Menlo Park, CA, April 2008.
2. J. C. Brennan and B. P. F. Day, in J. C. Brennan, ed., *Food Processing Handbook,* Wiley-VCH, Weinheim, Germany, 2006, p. 306.
3. A. Brockschmidt, *Plast. Technol.* **30**, 64 (1984).
4. H. R. Seintsch and H. E. Braselmann, "Further Evaluations of HMW-HDPE Film Processing and Effects on Film Properties," TAPPI Paper Synthetics Conference, Washington, DC, 1979.
5. H. E. Braselmann and R. E. Barry, "HMW-MMW HDPE Extrusion and Fabrication Techniques for Grocery Sacks and Merchandise Bags," TAPPI 1984 Polymers, Laminations and Coatings Conference, Boston.
6. E. Benham and M. McDaniel, "Polyethylene, High Density" in *Kirk–Othmer Encyclopedia of Chemical Technology*, Vol. 20, 5th edition., Wiley, Hoboken, NJ, 2006.

FILM, ORIENTED POLYESTER

John Newton
ICI, Delaware

Updated by Staff

INTRODUCTION

Biaxially oriented polyester film is considered a high-performance film. It is used in numerous applications, including graphic arts, information storage and display, labels, solar control, membrane touch switches, pressure-sensitive tapes, hot-stamping foils, photoresists, fiberglass-reinforced panels, postlamination, ID and smart cards, and, last but not least, packaging.

World supply of PET film continues to expand. The domestic manufacturers of PET film for the merchant market are DuPont Films (Mylar, Melinex), Mitsubishi (Hostaphan), Toray Lumirror), Terphane (Terphane), and 3 M (Scotchpar).

FILM MANUFACTURING PROCESS

Polyester is produced by combining ethylene glycol and either terephthalic acid or dimethyl terephthalate in a condensation reaction. PET film can be either cast or oriented. The oriented variety can be either blown or tentered (stentered). Tenter-oriented PET film is the most versatile because the process imparts an improved combination of physical properties.

In the cast-tentered process, the molten resin is extruded onto a cooled casting drum (see Figure 1). The film is oriented in the machine direction by heating, then stretching the film to three to four times its original length. The film is then heated again in a tenter (a large oven consisting of several heating zones) and drawn three to four times in the transverse direction (see Figure 2). The film proceeds to the hottest zone of the oven, where the now biaxially oriented film is heat-set, or annealed. This prevents the film from shrinking back to its original unstretched shape.

Film processing conditions affect shrinkage, gloss, tensile strength, elongation, and other characteristics. The film can be treated or coated, within the manufacturing process or afterward, to change or enhance its properties.

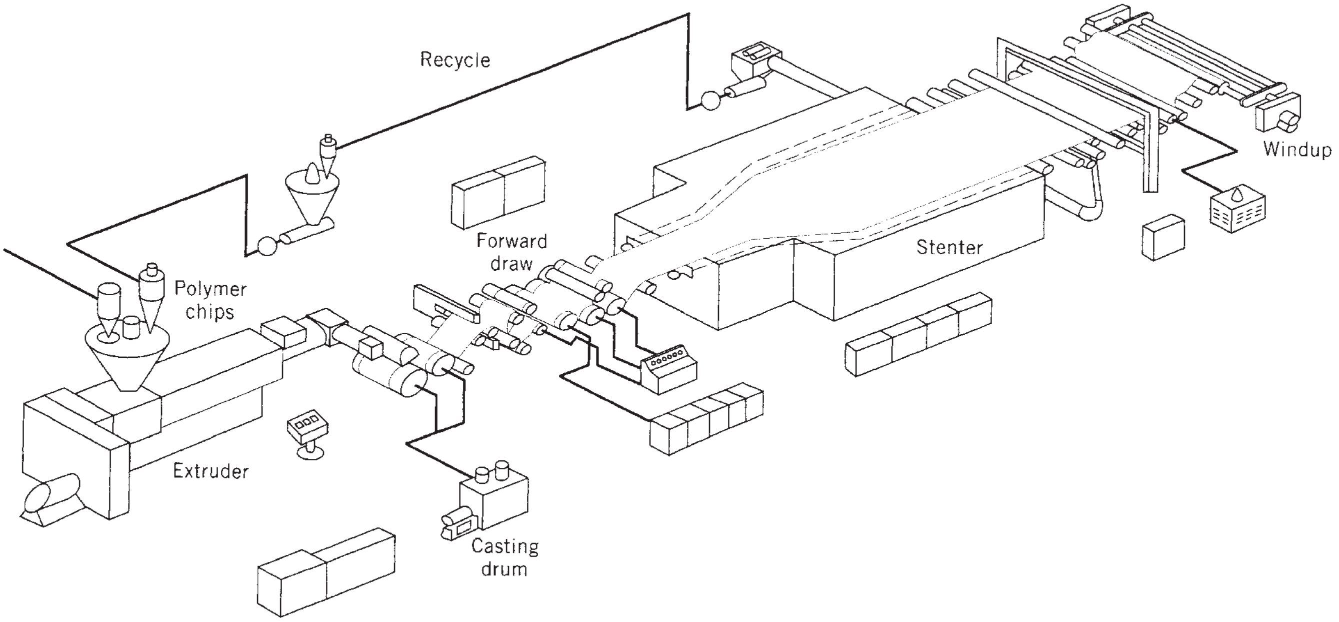

Figure 1. Film processing.

FILM PROPERTIES

PET has an outstanding combination of properties that make it valuable to the converting and packaging industries. Base PET film offers mechanical strength, dimensional stability, moisture resistance, chemical resistance, clarity, stiffness, and barrier properties. It handles well and can be printed or laminated (see Table 1). In response to customer needs, polyester film manufacturers have developed many technologies that change film properties to achieve useful effects (see Table 2).

Thermal

Polyester film gains excellent thermal properties through the heat-set process, allowing it to be processed and used in a wide range of temperatures. It tolerates temperatures ranging from −70°C to 150°C for several hours or more, and can withstand even higher temperatures for shorter time periods, making it suitable for extended drying ovens, hot stamping, and packaging processes that form, fill, and seal.

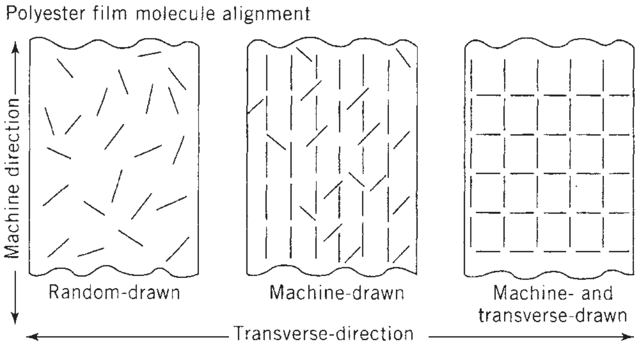

Figure 2. Polyester orientation.

Barrier

Flavor preservation is a major concern in the packaging industry. Barrier-type films constitute 50% of current U.S. PET film consumption. Polyester film has demonstrated an excellent ability to retain flavor and exclude odor from outside the packaging (see Figures 3 and 4). Metallizing or coating with PVC can provide greatly increased barrier properties.

Metallizing. Metallized films provide value to food packagers concerned with package integrity and shelf life. Metallized materials are decorative and also enhance properties such as moisture, light and gas barrier, flavor protection, protection against static electricity, and excellent machineability. Films other than polyester are now being metallized and used in packaging. However, polyester is still chosen when superior thermal stability and moisture and oxygen barrier are desired. Increasing the metal thickness further improves these barriers (see also Metallizing, vacuum).

PVC. PET can be coated offline (after the manufacturing process) with poly(vinylidene chloride). PVDC-coated PET is used in transparent packages to provide good barrier properties without metallizing. Typical coating thickness is 0.0001 in. (approximately 2 lb per ream). A major application for PVC-coated PET is in packaging processed meats such as hot dogs and luncheon meats.

Flavor Scalping

PET film is an excellent flavor and odor barrier for packaging products that contain strong flavors, smells, and migratory agents. The sealant that is used in a package is important if flavor scalping (the loss of flavor from a product to the laminate or environment) is an

Table 1. Typical Properties of Polyester Films

			Typical			
	Property		Gauge	Values	Units	Test Methods
Physical	Nominal yield		48	42,200	in.^{2}/lb	
	Tensile strength	MD	48	32,000	psi	ASTM DB82A
		TD		39,000		
	Elongation at break	MD	48	110	%	ASTM D882A
		TD		70		
	Coefficient of friction (in/out)	Dynamic	48	0.4		ASTM D1894
		Static		0.5		
	Density		48	1.40	g/cc	
Optical	Total luminous transmission		48	88.5	%	ASTM D1003
	Gardner haze		48	3.6	%	ASTM D1003
Thermal	Typical shrinkage	MD	48	3.6	%	Unrestrained at 374°F for 5 min
		TD		4.0		
Barrier Unmetallized	MVTR (24 h at 100°F and 90% rh)		48	2.8	g/100 in.^{2}	ASTM F372
	Gas permeability (24 h at 77°F and 75% rh at 1 atm)		48	O_2 N_2 CO_2 6.0 1.6 31.0	cc/100 in.^{2}	ASTM D1434
Metallized	MVTR (24 h at 100°F and 90% rh		48	0.05	g/100 in.^{2}	ASTM F372

issue. A coextruded, heat-sealable PET used as the sealant layer scalps significantly less flavor from products than does a PE sealant or an ionomeric (surlyn) sealant layer (see Figure 5).

The sealant (in conjunction with the laminate chosen) can either adsorb the flavor or allow permeation through the sealant and perhaps the laminate. PET film as a barrier web and coextruded, heat-sealable PET as a sealant layer each provide superior flavor barriers in comparison with other packaging films and sealants.

Table 2. Technologies Available that Affect Film Properties

Technology	Film Properties Affected
Manufacturing process	Tensile strength
	Flatness
	Shrinkage
	Abrasion resistance
	Roll formation
Polymer modification (e.g., additives or alloying)	Gloss
	Clarity
	Surface roughness
	Slip
	Abrasion resistance
	Flexcrack
	Adhesion
	Heat seal
	Barrier
Surface modifications (e.g., treating or coating)	Adhesion
	Slip
	Barrier
	Heat seal
Coextrusion	Adhesion
	Slip
	Heat seal
	Barrier
	Surface roughness
	Gloss

SURFACE MODIFICATIONS OF PET FILMS

Corona Treating

Corona treatments use an electrical charge to raise the surface tension of film and enhance its wet-out properties. Corona treatment more closely matches the energy of the coating surface to the energy of the substrate surface. This promotes the polyester film's adhesion to various materials used in different phases of conversion. Corona treating has been an accepted method for over 30 years. Its use is limited, however, because the treatment level dissipates with time.

Pretreatments

Polyester can be pretreated in-line for a variety of surface properties, making the coating an integral part of the film. With pretreatment, the coating is so thin that it is virtually invisible. The specific coating to be used depends on customer needs and processes, including the inks or solvents to be used, the processing equipment, and the demand of the end use. Pretreatments can improve handling by affecting slip characteristics on one or both sides. Some pretreats create a film surface that is receptive to a broad range of coatings and inks. Antistat pretreatments reduce static, which can cause handling problems and compromise worker safety during processing. Other pretreats produce superior metal adhesion for certain end-use applications.

Coextrusion

Coextrusion is another method for changing film properties. This process involves casting together two or more

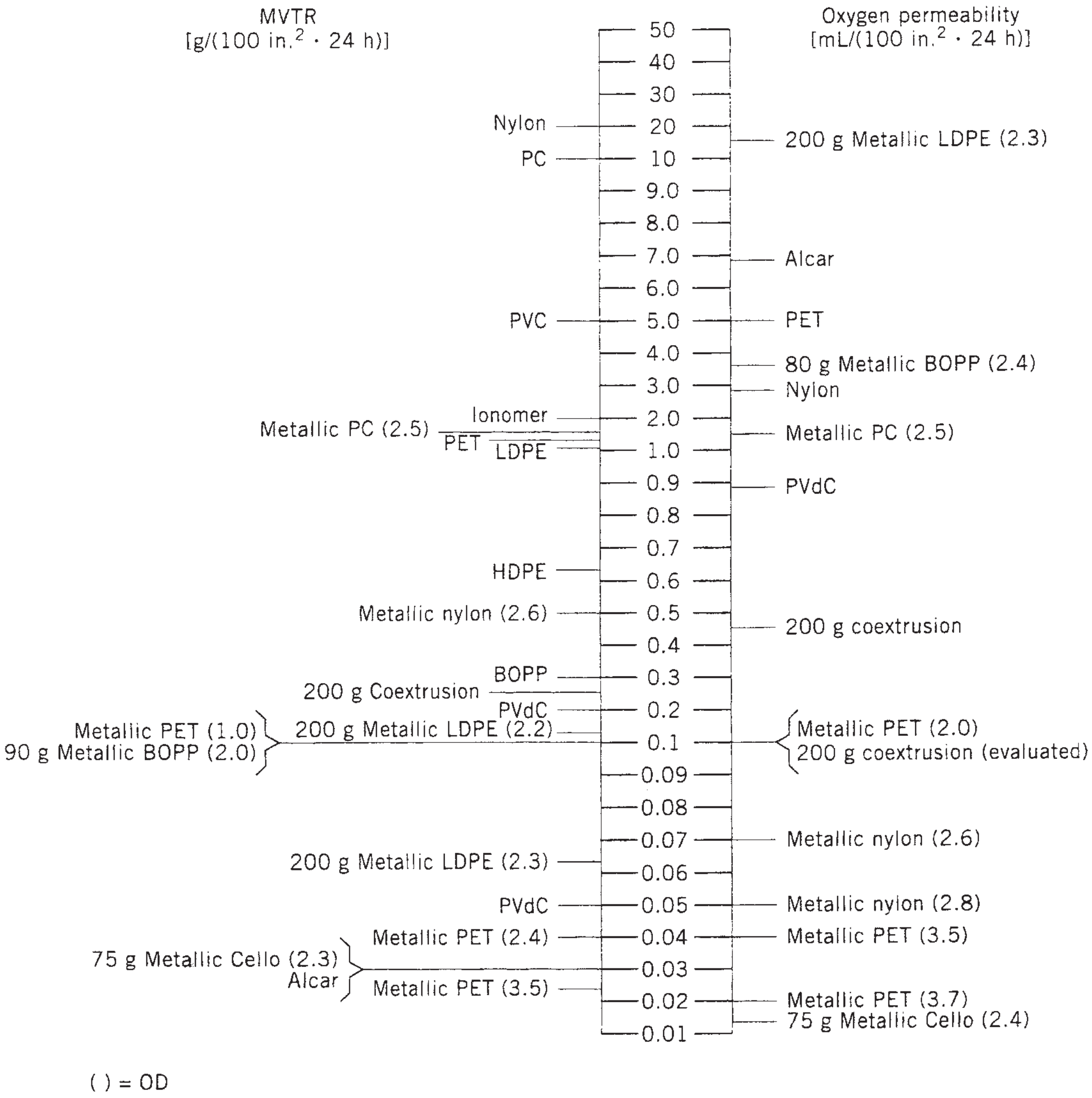

Figure 3. Barrier comparison. (Base substrates are 1 mil/metallic substrates 48 g unless noted otherwise.)

layers of polyester film to produce desired surface properties (see Figure 6). For instance, one layer of clear film can be coextruded with a layer of matte film, or a film that handles well can be coextruded with a layer of heat-sealing polyester, or resins of different colors can be coextruded. The first commercially available coextruded PET film imparted gloss and resisted glass fiber bloom when used as a construction material for pool enclosures and glazing. Today, one of the major applications for coextruded PET is metallized snack-food laminations, where it provides an absence of microcracking, a broad seal range, temperature resistance, excellent barrier properties, and improved handling.

Other Surface Modifications

Techniques for producing high-barrier transparent coatings have been available for many years. However, they were not economically viable. Sputtering techniques using indium tin oxide and aluminum oxide have produced films with oxygen transmission rates equal to those of metallizing. More recently, plasma treatments using silicon oxide products have also yielded barrier properties equal to metallized polyester (see Figures 3 and 4).

TYPES AND APPLICATIONS

Flexible packaging is a large and ever-changing source of demand for oriented PET film. Applications continue to grow as manufacturers change processes and properties to meet customer needs. In the past, polyester was considered the premier packaging material because of its unique characteristics. However, many companies continued to look for more economical ways of packaging. In many cases, they were able to maintain product integrity while using a less expensive package.

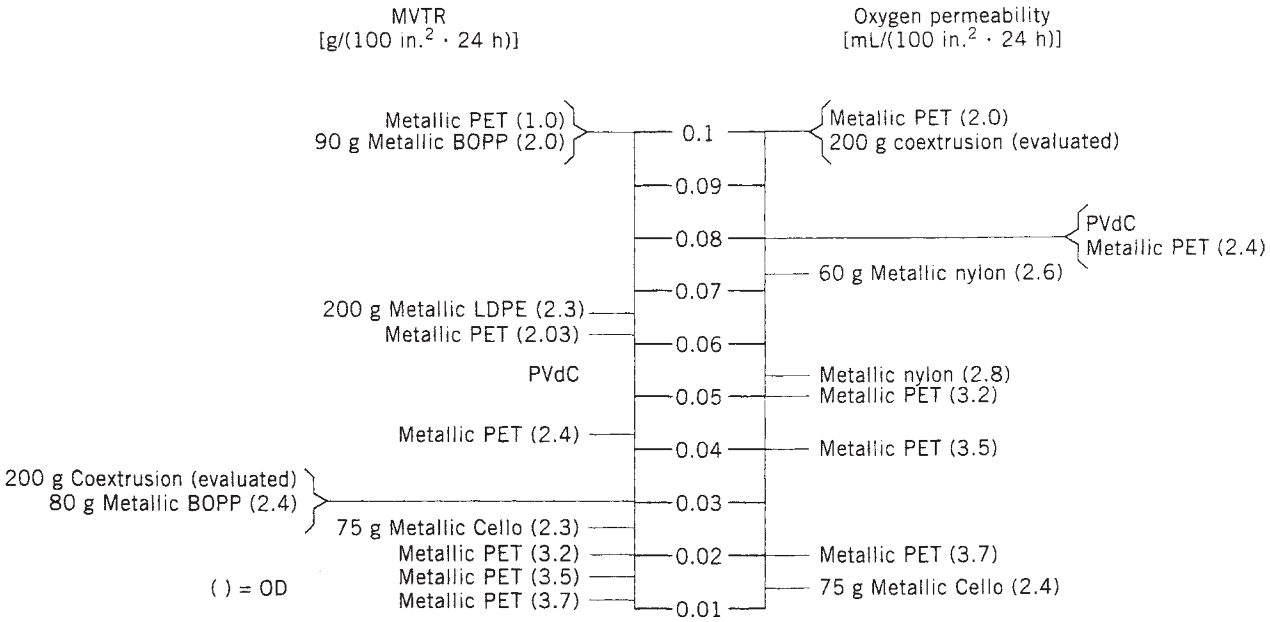

Figure 4. Barrier comparison. (All substrates are 48 g unless noted otherwise.)

In this day of downsizing and consolidation, however, companies are investing in equipment that allows them to run faster and use fewer people, and polyester is regaining its cost-competitiveness. To run equipment at full potential, polyester is preferred by converters because of its excellent ability to maintain registration (temperature stability) and because of its outstanding uniformity across the web and from point to point. The companies that use these converted products are also looking to reduce their costs by running faster. At one time, candy bars were wrapped at a rate of 100 per minute; today they exceed 400 per minute. Companies using polyester for packaging can obtain these higher speeds without distortion.

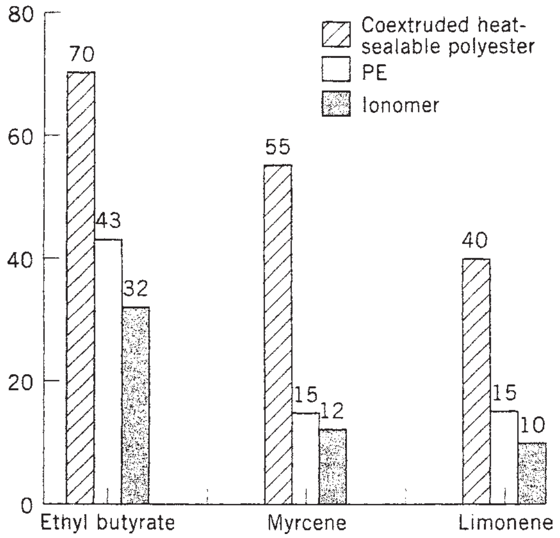

Figure 5. Percent of flavor compound retained. This graph indicates the percentage of flavor compound retained in orange-flavored Kool-Aid powder. Ethyl butyrate, myrcene, and limonene are the three key flavor components in the orange-flavored powder drink mix. The laminate structures were paper/poly/foil/PE, paper/poly/foil/ionomer (surlyn), and paper/poly/metallized heat-sealable PET.

Coffee

Coffee has long been packaged in metallized polyester structures for the fractional pack market. Typically, it has been used for restaurants and offices. PET in conjunction with aluminum foil and metallizing has taken a substantial portion of the coffee-packaging market previously held by metal cans. The brick-pack concept offers better economics and reduced shelf space.

Boil-in-Bag

Boil-in-bag applications typically use a 0.5-mil PET film with 2-mil medium-density PE adhesive lamination. A two-part adhesive system is used. The PET film is necessary for good dimensional stability in fabricating and sealing the pouch. It also provides heat-dimensional stability during the boiling operation (1).

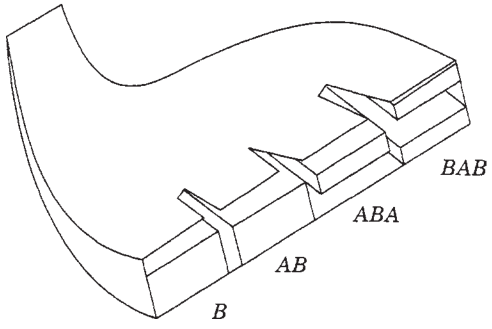

Figure 6. Coextrusion.

Bag-in-Box

Typical structures are polyethylene/metallized PET/polyethylene. Metallized PET is used because of good oxygen- and moisture-barrier properties and resistance to flavor scalping. Wine was the first application for this type of structure. Today it is also used for bulk packaging of condiments such as ketchup and mustard, as well as for foods such as tomato sauce (see Bag-in-box-liquid product).

Retort

The term *retort* refers to the process of sterilizing (cooking) a product after it is already packaged. A typical structure contains PET/aluminum foil/high-temperature adhesive/cast polypropylene (as a sealant layer) or PET-aluminum foil/HDPE (2). This type of packaged provides flavor that is closer to fresh vegetables in comparison with canned vegetables.

Dual Ovenable Lidding

PET is typically used as a lid to cover frozen single-serve dinners packaged in CPET trays. PET film can withstand the temperature differential of the freezer-to-oven transition, for both convection and microwave ovens. This market has a unique requirement: The film must seal to the tray, but must be peelable after heating.

Standup Pouches

The conversion from rigid containers to standup pouches in the United States has begun. Although the new packaging is touted for source reduction, the conversion will be driven by economics. The cost of producing, transporting, and storing unfilled flat pouches is less than that of rigid containers. Also, the pouches easily accept high-end graphics to create bolder, brighter packages on the shelf. These structures are typically thicker laminates (5–7 mil) to provide the stiffness necessary to stand on the shelf. PET, when reverse-printed on the outside of these packages, provides the thermal stability necessary to heat-seal through the thickness of the laminates (see Standup pouches).

Medical Applications

Oriented polyester film is ideal for packaging of medical and surgical devices because of its clarity (visibility) and temperature stability during sterilization. Untreated polyester has no migratory products. The PET film is combined with special paper and spun-bonded polyolefin, which allow gases to permeate both ways and restrict unwanted bacteria. Ethylene oxide is the preferred sterilization method today. Other techniques include steam and gamma radiation. The properties of polyester film are not affected at the highest levels of γ radiation. Sheets are also used to make X-ray film and test strips (3).

Shrinkable PET

Historically, both tamper-evident sleeves and labels have been made of vinyl. Over the last few years, Europe has begun to insist on products other than vinyl because of environmental concerns. Now being offered in Europe is a polyester that provides 50% shrink in the transverse direction and 5% in the machine direction.

Hot-Stamping Foils

The preferred substrate for hot-stamping foil has, for many years, been polyester film. The typical thickness is 48 gauge. Most of the film used is heat-stabilized to allow for better quality in processing and reproduction. In the normal hot-stamping process, heat and pressure are applied to produce a decorative image. Metallic hot-stamping foils are used to decorate boxes and bottles for the cosmetics and personal-care industries. A pigmented stamping foil is used to code or date products.

Holograms

In the past, holograms were used primarily as security devices on credit cards. Polyester was initially chosen as a substrate for use in this application because of its high-temperature stability and dimensional stability, along with its ability to be produced in thin gauges (48 gauge). The ability to use continuous processes with wider film widths has led packagers to begin incorporating holograms into packaging. New polyester films are being developed that allow holograms to be produced at faster speeds without coating (see also Holography).

Labels

The label industry uses many substrates, including paper, PVC, styrene, polypropylene, and polyester. Polyester plays many roles in this industry. It is sometimes used as a base stock that receives printing or bar codes. It can also be used as a protective cover lay or as a release liner. It is available either in transparent or white. The ease with which polyester can be metallized makes it suitable for high-quality decorative applications such as personal-care products, cosmetics, and pharmaceuticals.

ENVIRONMENTAL CONCERNS

PET film has a number of opportunities to stand out against other flexible-packaging films as more and more environmental pressure is placed on the packaging industry. Polyester is a good environmental choice because it is inherently more recyclable than other plastics and because of its capacity for including recycled content.

The biggest impact on the environment comes from reducing the amount of overall material used in packaging. Source reduction is driven by economic forces as well. Rigid containers (glass, metal cans, rigid plastics, etc.) are being converted to flexible standup pouches where possible. Flexible standup pouches can reduce the amount of packaging material by 70–80% when compared to a rigid container. Empty pouches occupy 70–90% less landfill volume. Rigid containers (plastic, cardboard, etc.) are also being source-reduced to the minimum technical requirements for their particular product.

PET film can also accommodate postconsumer recycled (PCR) feedstock within its manufacturing process. The

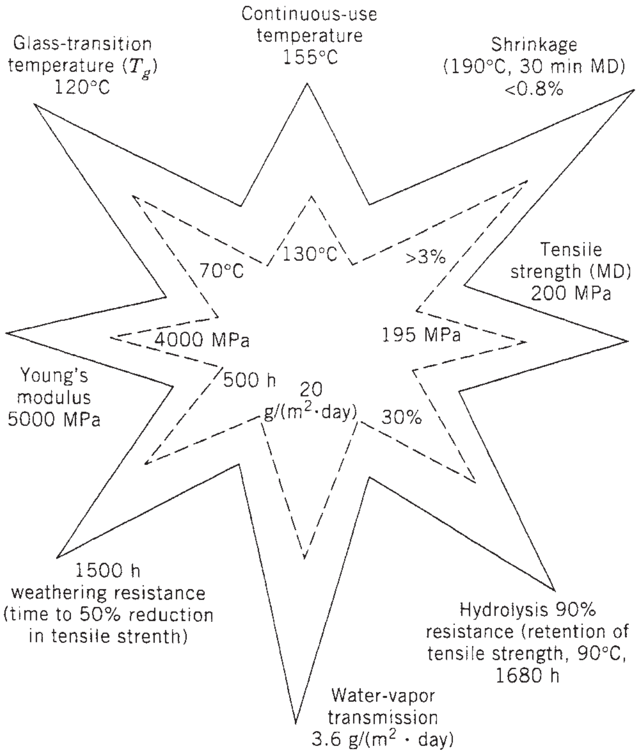

Figure 7. PEN films.

feedstock can be mechanically recycled, which requires a relatively pure PET feedstock. Mechanically recycled PET soda bottles can create a feedstock pure enough for FDA compliance. The feedstock can also be chemically recycled by either methanolysis or glycolysis process and can remain in FDA compliance. PCR feedstock is more expensive than virgin PET resin because of the additional processing involved (see also Recycling).

PEN FILMS

Opportunities in the packaging market were created by the introduction of PEN film and resin for bottles. PEN [poly (ethylene naphthalate)] is a member of the polyester family with a higher glass-transition temperature that delivers improved performance characteristics. The most important is its barrier properties. Teonex is the world's first PEN film developed by Teijin DuPont films. Compared to PET, PEN provides approximately five times the barrier for carbon dioxide, oxygen, or water-vapor transmission (see Figure 7). PEN also provides superior performance at higher temperatures when compared to PET. When used as a resin for rigid-container packaging, PEN allows them to be hot-fillable and both returnable and rewashable. As a film, PEN provides 25% greater stiffness, allowing thinner designs and greater barriers simultaneously (4).

BIBLIOGRAPHY

J. Newton, "Film, Oriented Polyester" in A. J. Brody and K. S. Marsh, eds., *The Wiley Encyclopedia of Packaging,* 2nd edition, John Wiley & Sons, New York, 1997, pp. 408–415.

Cited Publications

1. J. G. Brennan and B. P. F. Day, "Packaging" in J. G. Brennan, ed., *Food Processing Handbook,* Wiley-VCH, Weinheim, 2006.
2. M. J. Kirwan and J. W. Strawbridge, "Plastics in Food Packaging" in R. Coles, D. McDowell, and M. J. Kirwan, eds., *Food Packaging Technology,* Blackwell Publishing, Oxford, 2003.
3. "Mylar Film and Polyester Film" Grafix Plastics, www.grafixplastics.com/mylar, accessed October 2008.
4. Teonex, product outline, Teijin DuPont Films, www.teijindupontfilms.jp, accessed October 2008.

FILM, ORIENTED POLYPROPYLENE

Eldridge Mount
EMMOUNT Technologies,
Fairport, New York

Oriented polypropylene film was made commercially for the first time by Montecatini of Italy in the late 1950s. Shortly after Imperial Chemical Industries (ICI) of the United Kingdom entered into OPP film production, Kordite (the predecessor of ExxonMobil's Commercial Films Division), Hercules, Olin, and DuPont started production in the early 1960s. Through the mid-1980s, OPP manufacturing equipment was engineered using in house expertise at the first 10–20 OPP manufacturers, but today orientation equipment suppliers supply the engineering expertise supplying turnkey lines around the world as the demand for OPP films continues to grow. Orienting lines are typically 6–8 M in width with 4–10 M lines in operation. Line speeds range from a low of 200 M/min (for older machines), to 500 M/min (for a modern orienter).

In 2000, world demand stood at about 2,801,000 tonnes and was in balance with annual capacity followed by a 5-year period of excess capacity which is just now coming back into balance with capacity at a world-wide demand of approximately 5,000,000 tonnes (1, 2). Market growth of approximately 5–6% is expected for the next 10 years with world–wide capacity growing to approximately 9,000,000 tonnes by the year 2015. This assumes the continued shutdown of older slower and narrower lines which are rapidly becoming obsolete based upon their economics as well as aspects of their machine design. Growth of OPP markets is driven by technological product innovations, geographic expansion, and population growth as the per capita consumption of OPP increases with economic development. In the last 10 years, capacity growth has been primarily in the Far Eastern markets (China and India) as well as in Latin America and Central and Eastern Europe. Production capacity has been decreasing in North America, Japan, and, to a small extent, Western Europe. Also, a great deal of consolidation has been taking place in the market, with several manufacturers being absorbed by other companies.

As of 2007, there were reported to be 195 producers and 516 orienting machines (2).

Treofan is a large multinational OPP manufacturer with offices in the United States, England, and Europe; manufacturing operations are located in Mexico, Germany, Belgium, Italy, and South Africa.

The three largest producers in North America are:

- ExxonMobil, with plants in the United States, Canada, Belgium, Netherlands, and Italy
- A. E. T. (Applied Extrusion Technologies, Inc.), with three North American plants
- Amtopp

Other North American manufacturers include: Vifan, Toray America, 3 M, BIAX Int. (Canada), B.C.F. (Bemis-Curwood Films), Intertape Polymer, General Electric, and Steiner Films.

The two largest manufacturers in South and Central America are VITOPEL (Votorantin) in Brazil and Biofilm in Colombia and Mexico, with more than 10 other producers (Treofan, Sigdopack, Polo Films, OppFilm, Bopp Ecuador, Teleplastic, Agusa, Altopro, and Masterpack).

In Europe, ExxonMobil Plastics Ltd. and Innovia Films Ltd. are the largest producers, and consolidation of many of the original manufacturing companies continues in Europe. Other producers are: Dor Films, Treofan, Vifan, BOLLORÉ, Manuli, Polinas, Bimo, Radici, Derprosa, and about 12 other, smaller producers spread from Finland to the old Eastern Block countries to Greece to Spain.

In the Far East there has been a large growth of OPP capacity over the last 10 years, with large increases in capacity in China and India. Japanese capacity has decreased as older capacity is shut down and replaced with imported materials. A number of other producers are located in Taiwan, South Korea, Indonesia, Malaysia, Turkey, Egypt, India, and Israel.

RAW MATERIALS

The four resin categories used for OPP films are: homopolymer, copolymer, terpolymer, and modified resins (see Polypropylene). Homopolymer resins are made by polymerizing propylene monomer with a variety of catalyst. Copolymers incorporate 0.1–15% ethylene as a comonomer with propylene. The amount of comonomer used depends on the film's end use. Terpolymer production uses butene along with the ethylene and propylene feeds. Polypropylene homopolymer resins are also modified with terpenes to give them certain heat sealing properties (see Sealing, Heat) and to improve moisture barrier and film production. The homopolymer PP, is typically isotactic PP, and advances in molecular architecture control has permitted improvements in film properties and productivity. Due to advanced catalyst technology, syndiotactic PP, is now available and has been used in OPP shrink film production (3) but has not resulted in any broad change in OPP film.

MANUFACTURING PROCESS

When a film is biaxially oriented, it is mechanically stretched in the solid state (at a temperature below its melting point), in perpendicular directions. This aligns the film's molecules in the transverse machine direction (TD) and in the machine direction (MD). Once biaxial orientation has taken place, the film exhibits a marked improvement in optical properties: mechanical strength, moisture barrier, and low temperature durability over cast polypropylene film (see Film, Non-oriented Polypropylene). The increase in strength allows OPP film to be made as thin as 0.45 mils (11 μm) and still function as a laminating substrate for packaging applications (see Laminating; Multi-layer Flexible Packaging). Films as thin as 0.25 mils (6 μm) are routinely used for capacitors and under special conditions films as thin as 0.04 mil (1 μm) can be made. Balanced orientation is obtained when the degree of orientation, as expressed by the film's tensile strength, is approximately equal in each principal orientation direction. There are two different methods of orienting OPP film. They are called the "double bubble tubular" and "tenter frame". While both processes were in completion in the early stages of OPP technology, today the Tenter frame process dominates world-wide production of OPP films.

Double Bubble Tubular Process

In this process, molten polypropylene resin is extruded through a circular die (see Extrusion) and is water-quenched to control the polymer morphology of the tube and the tube is collapsed by a pair of nip rolls. At this point, the quenched tube is relatively thick (e.g., 1000 μm for a 25-μm finished film) and capacity of the bubble line is generally controlled by quenching rate of the tube. Next the tube is transported to the reheating section, where it is reheated by circular radiant heaters to it orientation temperature which is above the polymer's T_g (see Polymer Properties) and below the melting temperature. Air is injected into the tube after the first nip and held captive by a second nip, and the increased air pressure forms an expanded bubble between the nips (see Figure 1). At the same time the bubble is expanded, the bubble is pulled by the second nip at a speed faster than it is fed by the first nip. The size of the bubble's circumference controls the amount of transverse (TD) orientation and the speed differential between the first and second nips controls the degree of machine direction (MD) orientation.

After orientation, the film bubble is collapsed at the second nip and is either wound up as a heat shrinkable film or is reinflated and annealed for use as a stabilized, heat-set packaging film (4). Heat stabilization in the double bubble process is accomplished by one of several methods. In the "third bubble" approach (5), the oriented bubble is reinflated while the film's temperature is elevated to a point chosen for the required level of stability, but below the orientation temperature, and then is cooled. Alternatively, the collapsed bubble is passed over a series of heated rollers (6), raising the film's temperature as outlined above, and then quenched on cold rolls. In other cases the film has been held by clips and reheated in a tenter oven with parallel chains as described below (7).

In all heat stabilization methods, the film is mechanically restrained from shrinking back in the machine

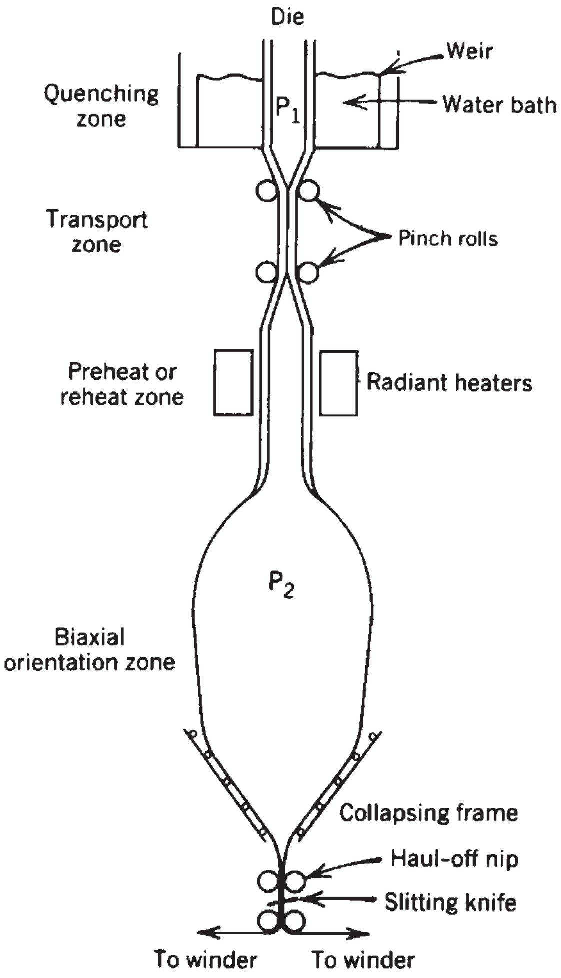

Figure 1. Schematic diagram of double bubble process.

direction (MD). The amount of restraint in the transverse direction (TD) varies from no restraint or 1–3% percent width relaxation, down to essentially no restraint. This heat treatment relaxes most of the high internal stresses and tensions built up in the film during orientation and provide a functionally stabilized product. However, most double bubble films will be less dimensionally stable than a film produced on a tenter frame, and in some instances (e.g., tobacco over wrapping films) this can be an advantage.

In the bubble-orientation process, after heat stabilization the sides of the collapsed bubble are slit and the film is wound simultaneously into two mill rolls. During this winding operation the film is frequently corona treated (see Surface Modification). This surface treatment consists of a controlled electron and ion bombardment. The film is slightly oxidized (3–8% oxygen incorporation), thereby increasing its surface free energy, which produces a multitude of sites that are chemically attracted to the polymers used in off-line coatings, printing inks, and laminating bonding-agents such as adhesives and polyolefin extrudate.

Tenter Frame Process

In this process, polypropylene resin is extruded out of a horizontal flat die, sometimes called a slot die. The extrudate is quickly cooled by a chilled roll, and a chilled roll is immersed in a water bath or in a cold water bath.

Today the majority of lines use a chilled roll immersed in a water bath. The quenching produces a sheet of controlled morphology approximately 1000 μm thick (for a 25-μm film). This heavy sheet is then reheated in contact with heated rollers to its orientation temperature (above the polymer's T_g but below its melting point). After reheating, it is first oriented in the MD. The first mechanical stretching is accomplished by drawing the sheet between a set of two, closely spaced, rollers, with one roller rotating faster (e.g., the fast roll) than the preceding roller (the slow roll) (Figure 2). On some lines a number of faster and slower roll sets are used, stretching and thinning the sheet in two or more sequential steps.

The next step is TD orientation, which is done in a "tenter frame." The tenter frame has two closely spaced endless chains with film holding clips which diverge apart to give a wider spacing at the end of the tenter (see Figure 3). The MD-stretched film enters the smaller open end and is gripped securely by its sides with spring-loaded mechanical clips (Figure 4). The clips are mounted on moving chains that run along lubricated tracks on each side of the frames. As the chains move forward and outward along these tracks, the film is stretched in the TD. Evolutions in clip design have greatly improved the manufacturing capabilities of orienting equipment and the subsequent increases in film speeds.

To achieve good heat stabilization, the film, still securely held by the clips, moves on into a heat-setting (annealing) oven section. In this section, the clip/chain systems at each side of the film have passed out of the diverging TD stretching section into a section of the tenter in which the chains run parallel to each other. Here the film is subjected to elevated temperatures for a few seconds while it is completely restrained in both directions. In some instances the TD stability can be improved by decreasing the width of the film, by bringing the chains

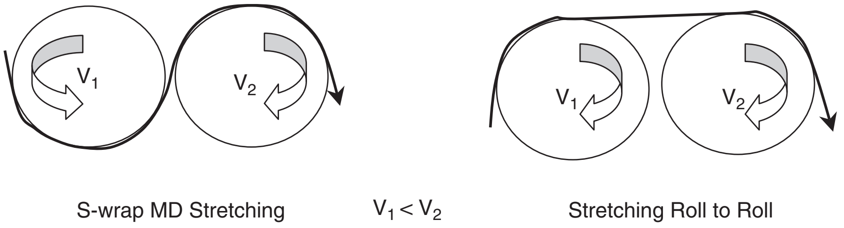

Figure 2. Schematic diagram of the machine direction orientation.

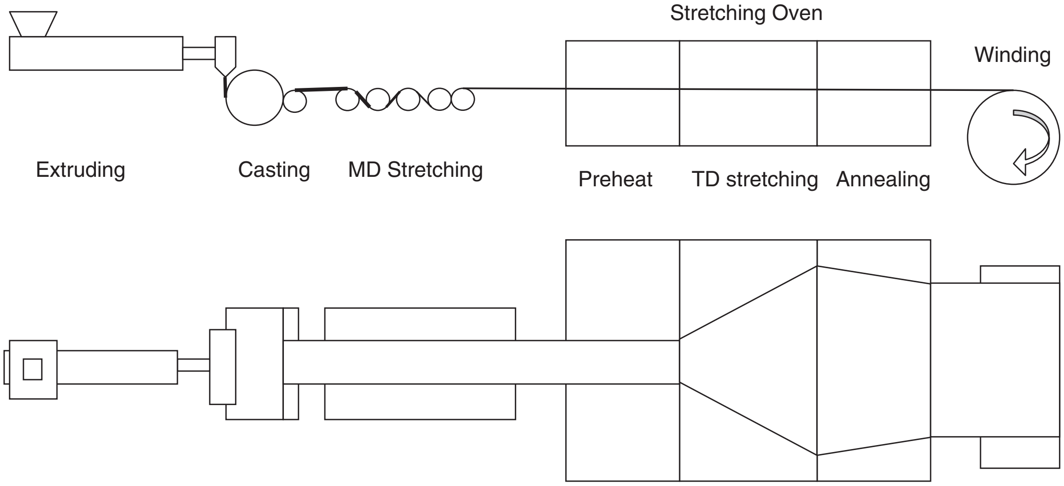

Figure 3. Schematic diagram of sequential biaxial film orienter.

1–4% closer together during the annealing process. The film is then cooled, released from the clips, has the thicker, unstretched portion under the clips removed, is generally corona- or flame-treated, and finally is wound up into mill rolls. Most modern OPP Tenter lines wind a roll the full width of the orienter, but some tenter frame users split the full width film into two roughly equal-sized mill rolls by slitting in-line (see Slitting and Rewinding) for subsequent use in film coating or metallization equipment.

Following orientation and stabilization, regardless of the process used, the freshly produced rolls are usually stored on racks for several days. During this time, remaining internal tensions are relaxed and a higher degree of crystallinity develops from secondary crystallization in the film. Additives included in the resin, such as those needed for slip, are also given time to bloom to the surface (see Additives, Plastics). After the proper time interval, the OPP film is ready for further processing in an off line coating and/or a finished slitting operation.

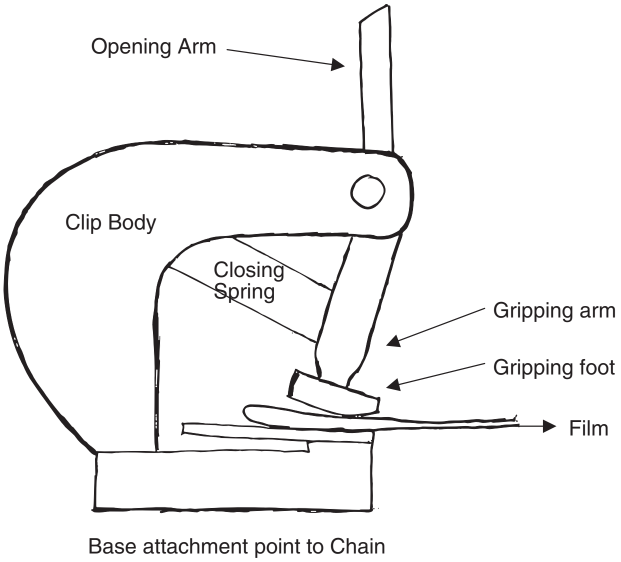

Figure 4. Side view of early style film stretching clip.

In some instances an additional MD stretching unit has been added after the TD oven to induce an additional MD stretch to the biaxially oriented film. This is done to increase the MD shrinkage of the film to make it suitable for heat-shrinkable labels and may be done inline on the film orienting equipment (8) or out of line during slitting (9).

In the early days of OPP film production when outputs were relatively low, double bubble lines were 120 in. (3.05-m) in circumference and tenter frames were 120 in. (3.05-m) wide. Over the years, larger lines have been engineered for both processes. At one time, 240-in. (6.1-m) circumference double bubble lines were in operation in Europe, but due to their low speeds and outputs, the majority of production capacity installed since the mid-1980s has been high-speed 6.1-m-to 10.0-m-wide tenter frame lines. Today the “standard” tenter line is 8.2 m and produces film at greater than 500 m/min. This movement to a much wider (and faster) line has greatly increased the OPP film producers’ productivity and has also significantly reduced the generation of narrow side rolls in slitting operations as film converting (e.g., coating, metallizing, printing, and laminating) equipment, has also increased in width. Both factors have contributed to OPP film’s reputation of being the most economical of all highly engineered, high-performance flexible packaging materials.

OPP FILM PROPERTIES

The very low density of polypropylene (0.905 g/cm^3) allows OPP film to have the greatest area-coverage yield per unit of weight of any commercially significant thermoplastic or cellulose-based sheet. Only cavitated opaque films can have a lower density (e.g., 0.6 g/cm^3) than clear OPP. This high area yield and ability to be made into very thin films are important contributions to its overall favorable economics, because the film is sold by the kilogram but used by the square meter, which give it the lowest cost/coverage area of comparable thickness films.

Thermal Properties

OPP films are intermediate in their temperature resistance as compared to other polymer films. With a melting point of 165°C, polypropylene films are more temperature-resistant than polyethylene films but less resistant than polyester films.

Normally, a heat-set OPP film can withstand brief contact (0.5 to 1 s) with sealing mechanisms that are 149°C (300°F), or slightly above that, without significant distortion in the seal areas (10). Sealing mechanisms above this temperature are possible with reduced residence time (<0.5 s) but do create progressively greater distortion potential until at about 154°C (typical orientation temperature) the film attempts to return to its unoriented dimensions, leaving the heated portions of the seal severely distorted. Because of this thermal shrinkage at higher temperatures, OPP film's sealing range has an upper limit of 149–152°C (300–305°F).

When subjected to elevated air temperatures for several minutes, heat-set OPP film will display a range of dimensional changes, depending on the temperature to which they are exposed. Below 75°C, OPP film shows very little or no shrinkage at extended heating times, and a package wrapped in this material maintains its dimensional integrity at normal packaging and distribution temperature histories. At a temperature of approximately 105°C the film will show 1–2% MD shrinkage and perhaps a TD width change of 0.5% shrinkage to 0.5% growth within 7 min. However, at 135°C and 7 min, the film will shrink approximately 3–5% in the MD and 2–3% in the TD. The actual dimensional change values and shrinkage versus. temperature profile will depend upon the manufacturing methods used to produce the film. Consequently, heat-set OPP films will show some shrinkage if they are exposed to very hot environments such as is found in retort packaging (250°F (121°C) at 15 psi 103 kPa)), and care should be exercised when choosing OPP for high-temperature applications.

In some cases OPP films are made purposely unstable so that they may be used for heat shrink films. These are used in two principal markets today, namely, shrink overwrap films and roll-on shrink on bottle labels. For shrink overwrap, at 135°C the film may shrink 35–50% in both the MD and TD directions while for shrink labels the films are designed to shrink uniaxially from 8–25% in the MD with 0% TD shrinkage.

Physical Properties

There are relatively few physical property differences between films made by the two processes (see Table 1). Both films possess excellent moisture-barrier properties but poor oxygen and aroma barriers. Moisture barrier increases and decreases proportionately with the thickness of the film under consideration. Tensile strength and elongation of blown films tends to be about the same in both directions (balanced). TD strength is higher than MD strength in tenter-frame films, and MD elongation is higher than TD elongation (unbalanced). Tenter-frame film has generally superior heat stability over blown film because of more severe annealing conditions that can be practiced in the tenter-frame operation. Double bubble OPP films have somewhat better impact strength. However, only in the most demanding and arduous packaging applications would these relatively small differences become significant.

Optical Properties

Standard OPP films are naturally high-clarity and high-gloss films offering excellent printing graphics product visual identification. However, many OPP suppliers also offer clear films with a low-gloss, matte surface, to aid in product graphic appeal and differentiation. Opaque, white films with 20–30% light transmission are also widely available as are metallized films with 1% or less light transmission and high reflectivity for light-sensitive products.

PRODUCT DEVELOPMENTS AND COEXTRUSION TO SEVEN LAYERS

The first two OPP films produced were single-layer homopolymer shrink film and heat-stabilized film that could not be heat-sealed. The former had limited application because of its need for hot-wire sealing and tremendous shrink energy, which originally precluded it from wrapping high profile products. The development of copolymers allowed the widespread development of propylene shrink films which today have replaced much of the original PVC shrink films and compete strongly with crosslinked polyethylene shrink films. Additionally, the development of special polymeric coatings and polypropylene copolymers and terpolymers during the 1960s, 1970s and 1980s respectively, has alleviated the lack of sealability problem in many applications.

The original heat-set OPP film gained wide acceptance as a laminating substrate when combined with heat-sealing polymer-coated cellophanes (see Cellophane) and glassine papers (see Glassine). The OPP film contributed strength, moisture barrier, and high surface gloss to the lamination. However, before acceptance was forthcoming from the marketplace, OPP film producers had to improve the film's slip characteristics over the relatively high coefficient of friction (COF) that is natural to the film and improve the low surface wetability. The addition of internal surface-blooming slip agents reduces the film-to-film COF to 0.2–0.4. This COF provides excellent machineability on automatic bag-forming machinery used in the snack food and candy industries, while surface oxidation improved wettability. Converters developed the hot-melt adhesive-based, heat-sealing thermal stripe that allowed the production of lap back seals on vertical form/fill/seal machines (see Form/Fill/Seal, Vertical). This technology widened the use of OPP film laminations for snack foods, candy, and pasta products. Today the use of three-layer coextruded films permits the direct formation of lap seals without the need for thermal strip technology. Another

Table 1. Properties of Oriented Polypropylene Films, 1 mil (25.4 μm)

Typical Film Properties	ASTM Test	Blown OPP Film	Tenter-Frame OPP Film	Slip-Modified Film	Acrylic-Coated Film	PVDC-Coated Film	Coextruded Film	White Opaque Film	Metallized Film
Specific gravity	D 1505	0.905	0.905	0.905					
Yield, in.^{2}/(lb · mil)		30,600	30,600	30,600		27,300	30,600	48,000	
[m^2/g · m)		[1714]	[1714]	[1714]		[1529]	[1714]	[2688]	
Haze, %	D 1003	3.0	3.0	3.0	3.0	3.0	3.0		
Light transmission, %									50–60
Tear strength, gf/mil (N/mm), propagating	D 1922	4–6 (1.5–2.3)	4–6 (1.5–2.3)	4–6 (1.5–2.3)	4–6 (1.5–2.3)				
Service temperature, °F (°C), range					70(39)	50(28)	40–110 (22–61)		
Heat seal temperature, °F (°C), range					230–300 (110–149)	25–300 (121–149)	190–300 (88–149)		
Oxygen permeability, cm^3 · mil/(100 in.^{2} · d · atm) [cm^3 · μm/(m^2 · d · kPa)];	D 1434								
77°F (23 °C), 0% rh		160 [622]	160 [622]	160 [622]	150 [583]	1–3 [4–12]	160 [622]	160 [622]	4–18 (16–70)
77°F (23 °C), 50% rh						4–6 [16–23]			
Water vapor transmission rate (WVTR) g · mil/100 in.^{2} · d) [g · μm/(m^2 · d)];		0.25 [0.1]	0.30 [0.12]	0.30 [0.12]	0.30 [0.12]	0.30 [0.12]	0.30 [0.12]	0.60 [0.24]	0.1–0.3 [0.04–0.12]
100°F (38 °C), 90% rh	D1894			0.2–0.4	0.25	0.2–0.4	0.2–0.4		
COF, face-to-face back-to-back		0.4	0.4	0.2–0.4	0.25	0.2–0.4	0.2–0.4		
Test conditions, 73°F (23 °C), 50% rh									

application for this non-heat-sealing film is the inner liner of paper bags for products such as cookies and pet foods.

Since this early beginning, the history of OPP product development of has been the creation of improved barrier technologies and the development of surfaces with special attributes to permit the use of the base sheets barrier properties in packaging and industrial applications. The primary protection that OPP inherently supplies is that of a moisture barrier. Additional barriers have been added during the development of new products such as oxygen, barriers, aroma (chemical) barriers, and light barriers. However, it is the moisture barrier property, combined with the unusually low polymer density, which results in the maximum possible product coverage with one of the lowest moisture permeabilities for clear films. When these two features are combined with special surface attributes such as sealability, printability, laminatability, coatability, metallizability, and machineability, a high-quality, low-cost packaging film emerged which replaced almost all of the cellophane then in use in snack food packaging. In addition to cellophane replacement, OPP has made further inroads into glassine paper and some foil markets as well. Today this combination of properties still drives the expansion of OPP films into new packaging applications and developing markets.

In order to reach this point, several weaknesses of OPP film relative to packaging in general and cellophane in particular had to be addressed. The inherent limitations to homopolymer OPP film are: no sealability, high COF surfaces, low surface wettability, static generation, and a lower use temperature range than cellophane.

In order to overcome these weaknesses in the product, both film and packaging machine changes were required. The temperature limitations were overcome by improvements in packaging machine design and temperature control of sealing jaws as well as the use of special acrylic and PVDC polymer coatings and the use of low-melting copolymers and terpolymers as film sealing surfaces. Today the machine evolution is complete and packaging machines are designed with OPP film as a primary wrap. Static generation occurs at all surfaces and, due to the high dielectric strength of OPP, must be eliminated at each point where static interferes with packaging machine performance. Product formulation approaches have been hampered due to a lack of Food and Drug Administration FDA-approved additives and the relatively high additive levels that would be required. Surface wettability is overcome by coating with acrylic polymers; for uncoated films, it is overcome by the surface oxidation of the film with corona, flame, or atmospheric plasma treatment on the film orienter and perhaps at subsequent converting steps. The development of multilayer coextrusion systems has also permitted the incorporation of non-propylene skins to be used, such as EVOH and nylon, which has further broadened to the range of product developments. The development of low COF surface modifications has relied almost exclusively on film formulation developments and has seen many developments over the years. The original surface modification for COF was a formulated acrylic coating that combined excellent printability, low COF, and broad sealability. The second development was the use of fatty acid amides that when added to the polypropylene, would diffuse to the film surface (called slip bloom) with time and heat treatment after film orientation. While this lowered film COF, it is difficult to control and the additive often interferes with printing ink adhesion, metallization, and lamination bonds. Today this slip blooming technology has been replaced by the use of mineral and polymeric particles that are dispersed in the film surface layers as well as the use of silicone oils for higher temperature applications. This gives a film COF's of 0.25–0.5. While these COF values appear high by the original standards, the films all exhibit a low but uniform force to transport the film over the forming collar and through packaging machines. It is this low film transport force which is the critical property for proper machineability and not the film-to-film COF.

Today, OPP film has found wide acceptance and continues to grow as new markets are developed making use of its special product characteristics. Many of the technologies developed to permit the use of OPP have gone through several developmental generations as new resin and additive technologies were invented to overcome the limitations of the first generation film modifications. Today, developments in polymer metallocene catalysis continues, thereby generating new propylene resins such as high-crystallinity polypropylene and syndiotactic polypropylene. How these new development and resins will impact future growth in OPP packaging and new film modification technologies is currently unclear.

SEALABILITY

The quest for functionality through heat-sealing on conventional sealing mechanisms used on most packaging machines let OPP film producers down four avenues of development. The first was the modified polymer route. This film uses a polypropylene that is modified with natural and synthetic terpene resins. The film is heat-sealable, although its sealing range is relatively narrow (25°F or ~14°C), and it does not have good hot-tack-seal strengths needed for form/fill/seal packaging. In overwrapping applications where the product to be packaged is contained in a carton or some other self-supporting structure, this OPP film has found good acceptance. Because this film is only partially heat-stabilized, it can be snugly tightened around the carton or bundle through the use of a heat tunnel. One version is used today as a cigarette-packaging material. However, this technology has largely been supplanted by surface sealability modifications.

The second method of imparting sealability to OPP film is by addition of an offline heat-sealable coating based on an acrylic polymer (see Acrylics). This coating adds flavor and aroma barrier, but no moisture or oxygen barrier properties to the OPP film. However, it does provide a relatively wide sealing range of 80°F or ~45°C and adds sparkle and good machine slip characteristics. It has a film-to-film COF of 0.2–0.3. It has high-volume use in horizontal form/fill/seal operations (see Form/Fill/Seal, Horizontal) for items such as baked foods (cookies in particular) and candy. As an overwrap film, it is used for pet foods and various tobacco products such as cigarettes, cigars, and pipe-tobacco cartons. Its hot-tack and seal-strength characteristics are such that it is used extensively for VFFS packaging of lightweight products, such as snack foods, but is not generally proposed for similar packaging of heavy products. These acrylic coatings are compatible with many inks (see Inks) and adhesives (see Adhesives) used by converters and are also heat-sealable with the PVDC coatings used on cellophane, glassine, and other OPP films (see Vinylidene Chloride Copolymers).

The third method to obtain heat sealability is to coat the OPP film offline with a PVDC coating, which also overcomes the gas-barrier deficiency. This is required because oriented polypropylene film in its uncoated form is not considered to be a gas-barrier film (see Table 1). Its oxygen permeability is relatively high at 73°F (23°C) using 1.00-mil (25.4-µm)- thick film (see Table 1). PVCD-coated films fall into four categories. The first is readily machineable on heat-sealing, automatic packaging equipment. The sealing range in this case is relatively wide (60–80°F or 33–45°C), and the oxygen-transmission rate is improved (see Table 1). These films are available with one or two sides coated. The former is a laminating substrate for use with other OPP films and cellulosic materials, to package snack foods and candies. The two-side-coated product is used in unsupported form for bags and carton overwraps. In all of these applications, an aroma barrier (which the PVdC supplies) is generally desired by the end-user.

The second category of PVDC-coated OPP film has a superior gas barrier and an oxygen-transmission rate of 8–12 $\text{cm}^2/(\text{m}^2 \cdot \text{d})$. However, because its sealing range is no more than 50°F (28°C), this film is not used for its heat sealability. Rather it is used as a laminating substrate with various other materials for the controlled atmosphere packaging of coffee, natural cheese, and processed meats (see Controlled Atmosphere Packaging).

The third category combines an acrylic coating on one side and a PVDC coating on the other side. The advantage cited for this film is that it provides a degree of gas and improved aroma barrier, is lap sealable, machines well, and costs somewhat less that two-sided, heat-sealable, PVDC-coated OPP films.

The fourth category of PVDC-coated films is the combination of the high-barrier PVDC coating with a broad-seal-range, coextruded sealant skin. This film is used as a laminating film with the high-barrier PVDC buried in the structure and makes use of the excellent seal properties of the coextruded skins (see below).

The fourth avenue of development of heat sealability of OPP films is through coextrusion. Although coextruded, multi-ply, heat-sealing OPP films have been available since 1955; this type of film came into large-volume usage during the late 1970s and early 1980s. This was in large part due to the development of ethylene propylene copolymers (EP copolymer) and later by ethylene, butylene propylene terpolymers (EBP terpolymer), resins, and advances in the technology of coextrusion die design. Coextrusions are made using several basic approaches. In one approach, two or more extruders feed their individual molten polymer streams to a single manifold extrusion die (see Coextrusion, Flat; Coextrusion, Tubular). In the upstream section of the die is a round or rectangular "feed block" mechanism that brings these polymer flows together into layers before passing them to the single cavity (manifold) where they are deformed into a single wide, thin rectangular sheet as it passes out of the die lips. Another method is termed "tandem" coextrusion. With this procedure the film's core material is extruded from its own extruder and die. This extrudate is then extrusion-coated (see Extrusion Coating) from one or more extruders and dies, or it is hot-nip laminated to other compatible, independently manufactured films. In recent years this "tandem" coextrusion has been largely replaced with multi-manifold coextrusion technology. In this OPP technology, generally three separate die manifolds are contained together in the same die body. As the polymer flows toward the die exit, the separate layers are combined together in layers and then exit the die lips together. This technology has permitted the combination of resins that cannot be coextruded by the feed block method or "tandem" methods describe above. More recent developments have combined the feed block with the multi-manifold dies to produce five and more layers in a single sheet. In all coextrusion cases the multilayered sheets are moved into the orientation units of the line. Coextrusions can be made by both the blown bubble and tenter frame processes.

Polypropylene does not anchor well to many other polymers. As a result, great care must be taken in the choice of materials used in OPP film coextrusions; otherwise inter-ply bonds may be broken during orientation or, later, by the stresses of package forming techniques and distribution. Other demands on outer ply materials include hot-slip characteristics that allow easy film movement over hot-packaging machine parts and surface-slip characteristics for good overall trouble-free automatic high-speed machining. The ply destined to be printed or laminated must also be corona- or flame-treated.

Today, most coextruded OPP films consist of two to five layers. The majority of the film's mass is in the core ply that is usually made with virgin homopolymer and some regrind. One or both sides of the core may be covered with a polypropylene-rich copolymer or terpolymer, an ionomer (see Ionomers), or a vinyl acetate-modified polyethylene layer. The choice of polymer depends on the purpose for which the finished film will be used. Polypropylene-rich copolymers of propylene and ethylene are used for their good hot-tack seal strengths and excellent finished seal strengths. Terpolymers of propylene, ethylene, and butene are used to improve the film's breadth of sealing range, and today's terpolymers have been developed to give excellent hot-tack strength as well. Vinyl acetate-modified polyethylene plies are used for their anchoring potential in offline coating, laminating, and metallizing operations (see Metallizing). Ionomer resin is used for its wide sealing range and ability to repel grease and oils. It is somewhat difficult to handle in the orientation process; but once oriented and heat stabilized, it provides lower level seal strengths of about 300 g/in. (116 N/m) which can be used advantageously in packages that demand an easy-open feature. Ionomer-skinned films are not generally made by

Table 2. Coextruded OPP Film Sealing Temperature Ranges

OPP Film	Sealing Temperature Range
Copolymer group A (0.5–e.0%)	30–50°F (16–28°C)
Ethylene copolymer group B (≥4% ethylene)	60–70°F (33–39°C)
Terpolymers (ethylene and butane)	85–95°F (47–53°C)
Ionomer	95–105°F (53–58°C)

the tenter process due to its aggressive adhesion to hot metal surfaces used in the process and are only produces on bubble equipment. These films are therefore at risk of disappearing as lower productivity bubble lines are shut down in favor of higher productivity tenters.

Coextrusion sealing temperature ranges very greatly, depending on the sealing ply materials. General categories are listed in Table 2.

Thin coextruded OPP films, 0.57–0.70 mil (14–18 μm) thick, are often laminated to other substrates such as polymer-coated cellophane, glassine, paper, and other OPP films for snack food, candy, processed cheese, and pasta-product packaging. In unsupported form they package lightweight products such as single-serving packages of crackers used in restaurants.

Medium-weight films, 0.800.90 mil (20–30 μm) thick, are used for carton and tray overwraps by the bakery and candy industries, as well as for form/fill/seal single wall pouches by pet food producers. A specially designed medium weight material is used as a cigarette package overwrap. Heavy, thick coextruded OPP films, over 1.00 mil (25.4 μm) thick, are normally used in unsupported form to package cookies, candies, snack foods in small bags, and other products that need the stiffness, strength, excellent moisture barrier, and rich feel offered by these films.

OPAQUE FILMS

White opaque film is one of the fastest growing OPP film developments in the United States and Western Europe. The most widely accepted film products of this type are made by the tenter-frame process. Homopolymer resin is evenly mixed with a small amount of foreign particulate matter. In one product, when the thick filled sheet is oriented, the polypropylene pulls away from each particle, creating an air-filled void (closed cell). After heat stabilization the OPP film is similar to a micropore foamed product. In the second product, the material is produced as a filled film without voids. The opacity is a direct result of the amount of particulate material included in the film.

In the film with air-filled voids, the imparted opacity and whiteness is created to a small degree by the encapsulated particulate matter. However, the primary opacification is brought about by light rays bouncing off the polypropylene cell walls and the air within each cell. The refractive index of the air is less than for polypropylene. This refraction difference results in TAPPI opacity of about 55%. The light diffusion gives the film the visual effect of pearlescence. Brightness values are calculated at 65–75% by the GE method. The actual gauges of this white opaque film are deceptively thick when their area yield per unit of weight is considered. A 1.5-mil (38-μm)-thick cavitated OPP film has an area yield of 30,000 in.^{2}/lb (427 cm^2/g), which is about the same yield provided by a 1.0-mil (25.4-μm)- thick transparent OPP film.

Coextrusion and out-of-line coating techniques have greatly expanded the market acceptability of white opaque OPP film. By using these approaches to film manufacture, the film can be made one- or two-side heat-sealable. These steps can also increase the film's moisture, oxygen, and aroma barrier. White opaque OPP films are finding growing volumes in snack-food packaging, candy-bar overwraps, beverage-bottle labels, soup wrappers, and other applications that traditionally have used specialty paper-based packaging materials. White opaque films are also finding new applications such as photographic paper and digital printing substrates.

METALLIZING

The use of OPP film as a metallizing substrate is another area of new market growth (see Metallizing). In this process, aluminum is vaporized onto one side of a film or paper in a high-vacuum environment. The speed of the substrate's passage over the vaporization pots controls the amount of metal deposited on the film. If the metallized surface is to be used primarily for decorative purposes, a relatively light coating of approximately $4\,\Omega^2$ (1.6 optical densities, OD) is applied. This gives OPP film, originally in transparent form, a light-transmission rate of about 5%. If the metal coating is used for significant improvement of the finished film's barrier properties, a heavier disposition of $2\,\Omega^2$ (2.2 OD) is employed. This level lowers light transmission to about 0.6%. Moisture and oxygen barrier are improved dramatically (see Table 1). In packaging, metallized OPP films are widely used in snack-food laminations and for confectionery wraps.

Today further product design advances have been made by coextruding non-polypropylene polymer surfaces, that, when metallized, lower the moisture barrier properties of the metallized film relative to metallized OPP and below that of metallized polyester (PET) films while approaching the oxygen barrier properties of metallized PET (11). Further developments have produced developmental samples of metallized OPP that have moisture and oxygen barriers significantly better than metallized PET and approaching the properties of foil. This is accomplished by the incorporation of non-polypropylene layers such as PETG (12), nylon (13), HDPE (14), and EVOH (15) for the metallized surface.

LABELS

This is a growth area for OPP films with cavitated and clear films gaining wide acceptance in many labeling applications. The broad label categories where OPP is making inroads are inmold labels, roll-fed labels, pressure-sensitive labels, roll-fed shrink labels, cut and stack for hot melt, and wet glue. The OPP film functions as a carrier for sophisticated coatings that give many of the surface properties needed for the label applications.

BIBLIOGRAPHY

W. R. R. Park, ed., *Plastics Film Technology*, Plastics Applications Series, Van Nostrand Reinhold Company, New York, 1969.

O. J. Sweeting, ed., *The Science and Technology of Polymer Films*, Vol. I, Interscience Publishers, New York, 1968.

O. J. Sweeting, ed., *The Science and Technology of Polymer Films*, Vol. II, Interscience Publishers, New York, 1968.

C. J. Benning, *Plastic Films for Packaging; Technology, Applications and Process Economics*, Technomic Publishing Co., Lancaster, PA, 1983.

T. Kanai, and G. Campbell, eds., *Film Processing*, Hanser/Gardner Publications, Cincinnati, 1999, pp. 339–343.

K. R. Osborn, and W. A. Jenkins, *Plastic Films Technology and Packaging Applications*, Technomic Publishing Company, Lancaster, PA, 1992.

R. J. Samuels, *Structured Polymer Properties: The Identification, Interpretation, and Application of Crystalline Polymer Structure*, Wiley-Interscience, New York, 1974.

M. Bakker, Ed., *The Wiley Encyclopedia of Packaging Technology*, Ist edition, John Wiley & Sons, 1986.

Cited Publications

1. M. Gschwandtner, *Proceedings of AMI BOPP Film*, 2007.
2. W. Pinneger, *Proceedings of AMI BOPP Film*, 2007.
3. M, Amon, R. G. Peet, and S. J. Pellingra, Jr., U.S. Patent 6,113,996, "Composition for Uniaxially Heat Shrinkable Biaxially Oriented polypropylene Film," U.S. Patent and Trademark Office, Washington, DC, 2000.
4. C. J. Benning, *Plastic films for Packaging; Technology, Applications and Process Economics*, Technomic Publishing Co., Lancaster, PA., 1983, p. 39.
5. G. M. Reade, U.S. Patent 3,814,785, "Heat Stabilization of Oriented Thermoplastic Films," U.S. Patent and Trademark Office, Washington, DC, 1974.
6. M. Yazawa, U.S. Patent 3,632,733, "Heat Treating Two-Ply Biaxially Oriented Films," U.S. Patent and Trademark Office, Washington, DC, 1972.
7. P. J. Barham, J. A. Odell, and F. M. Willmouth, European Patent Application 0 023776 A1, 1981.
8. L. E. Keller, and M-F. Nothnagle, U.S. Patent 5,691,043, "Uniaxially Shrinkable Biaxially Oriented Polypropylene Film and Its Method of Preparation," U.S. Patent and Trademark Office, Washington, DC, 1997.
9. W. J. Ristey, G. A. Senich, W. J. Hill, and H. S. Anderson, U.S. Patent 5,851,610, "Shrink Films and Articles Including the Same," U.S. Patent and Trademark Office, Washington, DC, 1998.
10. http://www.oppfilms.com/Public_Files/OPPFilms/Oriented_PP_;Films/NorthAmerica/Test_Method_Dimensional_Stability.pdf
11. Eldridge, M. Mount III, John R. Wagner, "Aroma, Oxygen and Moisture Barrier Behavior of Coated and Vacuum Coated OPP Films for Packaging," *J. Plastic Film & Sheeting* V17 (July), 2001, pp. 221–237.
12. E. M. Mount, A. J. Benedict, European Patent 444340; "Metallizable Heat-Sealable, Oriented Polypropylene Film Has Layer of Co-polyester to Improve Bonding to Metal," 1991.
13. R. A. Migliorini, E. M. Mount III, U.S. Patent 5,591,520, "High Barrier Film", U.S. Patent and Trademark Office, Washington, DC, 1997.
14. R. A. Migliorini, E.M. Mount III, U.S. Patent 5194,318, "Multilayer Film with Metallized Surface," U.S. Patent and Trademark Office, Washington, DC, 1993.
15. R. A. Migliorini, U.S. Patent 5,153,074, "Metallized Film Combination," U.S. Patent and Trademark Office, Washington, DC, 1992.

FILM, PERFORATED

Nazir Mir
Perftech, Inc., Oswego,
Illinois

INTRODUCTION

There is a growing interest to use flexible polymeric films with "improved" gas and water vapor transmission properties for horticultural packaging and other food and industrial applications. Fresh produce is still respiring, taking in oxygen and giving out carbon dioxide, and thus its packaging requires polymeric films with selective oxygen and carbon permeability matching the requirements of this respiring product. The word "improved" in the first sentence above means those films having suitable gas and water vapor transmission properties to match the requirements of the application. While high-barrier films (those with low transmission rates) are usually used to protect shelf-stable foods against oxygen and water vapor, those films are not suitable for packaging fresh produce. Films with improved gas and moisture transmission properties for fresh produce are generally achieved by one or a combination of the following: (a) selection of polymeric films, (b) addition of fillers during film extrusion, and (c) perforations.

Improved films are constantly being developed to satisfy the needs of the marketplace. Some of those films include high (6–18%) ethylene vinyl acetate content, low-density polyethylene (Elvax) films by DuPont, oriented polypropylene (OPP) laminates by BP Amoco, styrene butadiene block copolymer (K-Resin) films by Phillips Chemical, ultra-low-density ethylene octene copolymer (Attane series) films by Dow, and polyolefin plastomer octene copolymer (Affinity series) films by Dow (1).

Plastic films can also be incorporated with inert organic fillers such as $CaCO_3$ and SiO_2 or organic minerals such as zeolite. Such films may then be biaxially oriented to create small perforations generally in the range of 0.14–1.4 μm in diameter (2). The gas and vapor transmission properties of these films can be manipulated by adjusting the particle size of the filler and the degree of stretching.

Ethylene manipulation is extremely important for storability of some horticultural crops. Some additives such as zeolites may also confer ethylene adsorption properties to the film. Ethylene adsorption capacity by zeolite may be reduced markedly by the presence of water vapor. It has been shown that the ethylene adsorption capacity of a zeolite impregnated film was negligible at 100% RH compared to its maximum capacity at 0% RH (3). Because most horticultural packaging applications are at conditions near water vapor saturation, the use of such films has not yet had any major commercial success.

MANUFACTURING TECHNOLOGY OF PERFORATED FILMS

Perforated films are plastic films that have holes drilled through all the layers of the film. Depending on the size of perforation, the film may be called microperforated or macroperforated films. Microperforated films have perforations in the range of 5–300 μm in diameter, while macroperforated films have perforation exceeding 300 μm in diameter. Generally speaking, microperforated films are largely used to increase the gas properties of packages containing high-respiring produce such as broccoli, bananas, and leeks.

Currently, much marketing effort is focused on improving the presentation and utility of value-added fresh produce products. As a result, the produce industry is shifting more and more toward product offerings in trays as opposed to traditional breathable bags. The most commonly trays used are either polyester or polypropylene, both of which are quite impermeable to the gas exchange in the thicknesses used for these applications. Thus, to account for the respiratory requirement of the packaged product, the trays need to be lidded with a highly gas-permeable membrane. This can conveniently be achieved using microperforation technology while keeping the sealabilty, machineability, ink adhesion, and other properties unchanged during the process. Macroperforated films are largely used to increase the moisture properties of films for packing whole produce (such as tomato, pepper, banana) and cold and hot bakery products.

There are several postmanufacturing technologies available for perforating plastic films. These technologies include (a) mechanical puncturing by cold needle, and (b) plastic melting at directed spots by hot needles, flame, low-energy electrical discharge, and high-energy electrical discharge and lasers. The cold and hot needle technologies and the flame technology are commonly used for macroperforation, while the electrical discharge and lasers technologies are commonly used for microperforation.

The technologies for macroperforation have been available in the industry for a relatively long time. Electrical discharge systems for microperforation of plastic films is a mature technology. Although the perforations on plastic films can be achieved reliably with electrical discharge systems, most systems have certain film thickness limitations beyond which it is almost impossible to achieve perforation consistently.

Laser technologies for perforation of plastic films are relatively new. Practically speaking, laser systems contain three key elements: (1) a laser medium that generates the laser light, (2) a power supply that delivers energy to the laser medium in the form needed to excite it to emit laser light, and (3) an optical cavity that concentrates the light to stimulate the emission of laser radiation. Since the introduction of laser systems for perforation of plastic films to the marketplace, technological improvements in all these three components have improved dramatically. For instance, the systems have evolved from weak 20-W power sources to 2-kW power sources, from split beam technology to beam compression and recently to polygon mirror directing, which ensures that the beam strength stays constant throughout the laser exposure interval. This function has remarkably increased the speed and quality of the perforations on a number of plastic films. Figure 1 illustrates such a system.

Perforation of plastic films is commonly achieved by CO_2 laser systems. The laser energy generated through such a system is absorbed by a plastic film in directed spots. The film in those spots are heated, melted, and eventually evaporated, leaving perforations in the film. Although the principle of laser-drilled perforations is common in all plastic films, there is a strong interaction between the nature of the films and their laser absorption characteristics. Some films may need a very small dose of energy to melt, while for others it may be almost impossible to drill holes under commercial requirements.

TRENDS

A new trend in flexible film business is to offer materials as blends of two or three different polymers, in which each polymer performs a specific function such as improving strength, transparency, or gas transmission to meet specific product requirements. Laminated film structures are also becoming common for a number of value-added fresh produce applications. The structural complexity of these new films imposes a number of challenges and, at times, imposes restrictions on the successful application of lasers on the perforation quality and frequency of these films. The perforation quality is often measured by shape, size, and aspect ratio. Depending on the shape of perforations, the aspect ratio can be 1 or >1. The circular perforation has an aspect ratio of 1; and as the shape of the perforation deviates from the circularity, the aspect ratio begins to increase. The oblong perforation has an aspect ratio of 1.2 to 1.4. The aspect ratio is defined as the length of the perforation in machine direction divided by the length of the perforation in transverse direction. It is either circular or oblong.

The adhesives in laminated structures can also interfere with the laser energy absorption process and may dramatically reduce the speed of laser perforation process. In some instances, the adhesive may serve as a strong sink for the laser energy, thus making it impossible to drill a hole through all layers of the laminate. Thus, it is conceivable to think that the development of operating perforation procedures for films that vary in chemical

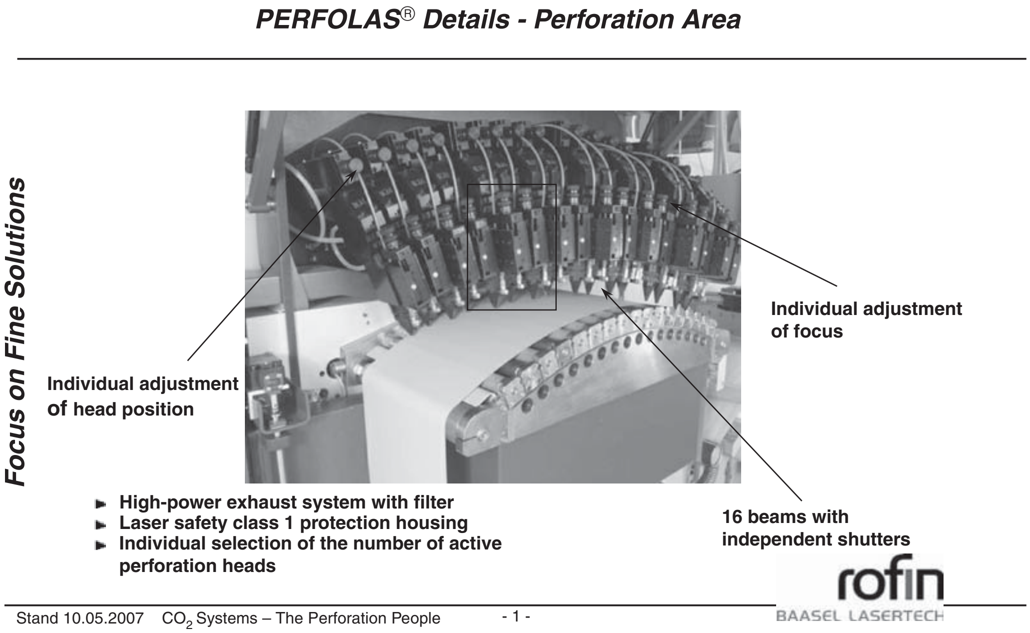

PERFOLAS® Details - Perforation Area

Focus on Fine Solutions

Individual adjustment of head position

Individual adjustment of focus

16 beams with independent shutters

- High-power exhaust system with filter
- Laser safety class 1 protection housing
- Individual selection of the number of active perforation heads

Stand 10.05.2007 CO$_2$ Systems – The Perforation People - 1 -

rofin BAASEL LASERTECH

Figure 1. Laser system for manufacture of perforated film.

structure due to variations in polymer blending or adhesion of various layers in a laminate can often be extremely complex, time-consuming, or impractical for commercialization. The development of a successful perforation protocol for these films is usually driven by knowledge of the interaction of laser energy with film structural components, and then whether or not the perforated product can be marketed as a packaging solution at a cost that would suit the utilizing industry.

BIBLIOGRAPHY

1. S. Ben-Yehoshua, S. Fishman, S. Jayanty, N. Mir, and R. M. Beaudry, "Modified Atmosphere Packaging, Controlled Atmosphere Packaging, and Seal Packaging" in S. Ben-Yeshoshua, ed., *Post Harvest Physiology*, Sheffield Academic Press, Sheffield, UK, 2005, pp. 61–112.
2. Y. Mizutani, *Ind. Eng. Chem. Res.* **32**, 221–227 (1989).
3. G. Peiser and T. V. Suslow, *Perish. Handl. Q.* **95**, 17–19 (1998).

FILM, PLASTIC

Allen G. Kirk
E. I. Du Pont de Nemours, Inc.,
Wilmington, Delaware

Films are continuous membranes that can separate one area from another. These membranes can vary in thickness, ranging from less than that for rigid containers, to sheeting, to film, and even to thin coatings. Usually films are considered self-supporting and less than ~10 mils (250 μm) in thickness. No definition is given for a minimum thickness, which can vary depending on the material of construction of the film; however, thicknesses of <1 mil (25 μm) are common.

An important feature of most films discussed in this article is *heat sealability*, which refers to the thermoplastic property of the film, or coating on the film, which allows it to be fashioned into pouches, bags, and overwrapped packages by virtue of its ability to make a hermetic seal to itself. Heat sealing is accomplished by heating up the film areas then applying the hot areas to each other under pressure. Sometimes these operations occur simultaneously. During heat sealing, the polymer molecules become entangled; the better the intermingling, the stronger the seal. The time allowed for heat sealing in a typical high-speed food-packaging machine is less than 1 s, during which time heat-seal strengths of very high values can be achieved, i.e., several pounds per inch of seal width.

FILM USES

Because of their ability to keep two areas (or volumes) separated from each other, films have come to have a multitude of commercial uses over the years, particularly in the area of food packaging. Films do provide protection to the foodstuffs being displayed, and in doing so they can provide a multitude of other functional attributes. They can function as barriers for gases, vaporous flavor components, or moisture from escaping from the food, thus preserving its freshness. They can also protect the foodstuff from attack by undesirable outside agents such as air (oxygen), moisture, or sunlight, thus ensuring that the food does not become rancid or soggy. The film material can serve as a partial gas barrier, thus allowing some gases to escape but not others; the choice of packaging film to protect fresh vegetables and fruit can be very selective, especially if the vegetables and fruit are already cut or sliced for customer convenience. For fresh produce, the film must allow CO_2 to easily leave the package while allowing only low levels of air (oxygen) to enter the package for longer shelf life.

Films also provide a billboard for information about the contained product, directions on how to open the package, recommended dose levels, warnings about toxic contents, nutritional information, and universal product code (UPC) symbols for pricing and inventory control. This information can be displayed in a multicolor and aesthetically pleasing way on the packaging film so that it "sells" itself and acts as an impulse-buying aid. In addition, the transparency and high clarity of the film can provide a window in the package to allow the consumer to judge desirability of the product before buying or to judge remaining quantity in the package after purchase and as it sits in the consumer's home.

Film applications can be large, as in the case for some construction uses. Films or sheeting materials are used to wrap houses and buildings under construction, thus serving as moisture and wind barriers in the finished construction. Film products can be used in highway construction, as leakage barriers in municipal water reservoirs and as protective liners for municipal solid-waste landfill sites. Film applications can be small, such as the push-through blister pack for individually packaged medical pills. Packaging film uses can be categorized as follows.

Overwrap. This type of packaging usually involves unwinding a roll of flat film into the packaging machine, where it is folded around the object, the film sealed to itself, and the finished package removed by cutting the film. Typical products packaged by this method include small packs of snack crackers and cookies. The machine is commonly called a "horizontal make-and-fill machine." Products such a potato chips, corn chips, and bags of candy are packaged in vertical form/fill/seal machines in which a roll of flat film feeds into the machine over a forming collar where the film is formed into a tube. This tube is sealed along the back with a vertical heat seal, and then the bottom cross seal is made. The open-top tube is filled with the product and indexed down, and the top cross seal is made simultaneously as the bottom seal is formed for the next pouch to be filled and as the filled pouch is removed from the packaging machine. Coated cellophane, coated oriented polypropylene (OPP) film, and laminated films typically are used for this packaging application.

Skin Packaging. As the term implies, this type of packaging involves forming a skin of film over the object being packaged and sealing the skin film tightly to a heat-seal-coated display card. This is accomplished by placing the object to be packaged, usually a hardware item, onto the coated display card, then draping a hot sheet of film over the entire assembly, and applying vacuum to the backside of the permeable display card. The vacuum pulls the cooling hot film down over the object and applies pressure to assist in making the seal to the display card. Typically ionomer, low-density polyethylene (LDPE), or polyvinyl chloride (PVC) resin films are used for this packaging applications, and the board coating is LDPE or ethylene-vinyl acetate (EVA) (See the Skin packaging article).

Blister Packaging. Preformed blisters are filled with the object, the coated paperboard is placed over the filled blister, and the assembly is heat sealed. Small hardware items and small notions are commonly packaged in this manner.

Shrink Packaging. This type of packaging refers to the use of a film manufactured in such a way that when it is heated it will contract in both directions, reducing its surface area. When this type of film is wrapped around an object and sealed around its edges, then sent through a shrink tunnel where large volumes of heated air wash over it, the film will react to the heat and contract down to the object, thus making an attractive skin-tight package. A vent hole must be cut into the film to allow the trapped air to escape from the package as is undergoes film shrinkage in the hot-air tunnel. Shrink-film resins are polyethylenes, polypropylenes, PVC, polyesters, and some coextruded structures. Articles packaged in this manner are numerous and can include frozen poultry, pizzas, stationery, toys, cassettes, and compact disks.

Stretch Packaging. This packaging technique is useful for bundling objects together for convenience in shipping or handling. Resins used in this application include linear LDPE (LLDPE), LDPE, EVA, PVC, and some copolymers of polypropylene. Typically, when stretch wrap is used for pallet bundling, the tacky film is wound around the pallet many times to ensure tightness, the film cut, and the film end stuck down on the wrapped pallet. There is no need to heat seal or use mechanical fasteners with this packaging technique.

PLASTIC-FILM RESINS

It would not be possible to cover all resins that have been fabricated into film in this article. What are presented here are typical resins used over the years as packaging films.

Food packaging has successfully employed films for many years, starting in the 1920s in the United States with the introduction of cellophane film, which was used initially to package loaves of bread that had been previously overwrapped in paper. Because it was transparent, cellophane allowed the bread to be viewed by the customer before purchase. Uncoated cellophane is composed of regenerated cellulose, a softening agent, and water as a plasticizer. Although it is not moistureproof, it is impermeable to gases when the film is kept dry. Additional slip, antistatic, and antifog properties can be provided by special formulations applied as coatings to the base sheet. Cellophane is not a thermoplastic and does not have a melting point, heat sealability is possible only by applying a heat-seal coating such as nitrocellusose (NC) or polyvinylidene chloride (PVDC) to the base sheet.

By the early 1950s, LDPE resin was developed and began serving as the first major human-made (synthetic) thermoplastic packaging resin. Because this resin has a melting point and is thermoplastic, the packaging industry developed thermal extrusion equipment to extrude thin films of this new resin for packaging. Polypropylene (PP), which is another popular packaging resin, was first produced during the 1950s. However, it did not develop commercially until the 1970s, when new high-efficiency catalysts were discovered for its production. PP competed effectively for many of the cellophane packaging applications. Although cellophane had attractive properties of clarity, stiffness, gas barrier, and heat resistance, it also had disadvantages of limited shelf life because of the loss of volatile plasticizer. This loss of plasticizer caused the cellophane to embrittle to the point where the packaged product was no longer protected. PP has the inherent attributes of clarity, toughness, thermoplasticity, and heat sealability after being coated by PVDC. PP also has the advantage of having a density lower than that of cellophane; thus, more square inches of packaging film are possible from a pound of PP than from a pound of cellophane film—a definite economic advantage. As PP is a thermoplastic resin, it did not have the thermal resistance to provide fail-safe high-temperature sealing protection against substrate burn through on the packaging machine. Additionally, the lower modulus PP could not be fed easily through the push-feed packaging equipment developed years earlier for the stiffer cellophane. Feeding problems for PP were exacerbated by its greater tendency to generate and hold static charge, which caused clinging and feeding jams in the packaging machine. These serious packaging problems were eventually eliminated by machinery redesign and by improvements in PP base-sheet and coating technology. Plastic-film resins can be categorized by the chemical process used to form the molecules in the polymer resin backbone.

Addition Polymerization (Homopolymers). Polymers in this category include LDPE, HDPE, PP, polybutylene (PB), and polystyrene. During the polymerization or building of the polymer molecules, the individual monomer units (ethylene, propylene, and butylene, respectively) are chemically connected together in the pressure reactor in the presence of high temperature and an appropriate catalyst. By control of the residence time in the reactor, the number of these monomer connections can be varied. Long reactor time, longer polymer chain length, and higher molecular weight result. By controlling molecular weight, the manufacturer can control polymer resin properties such as viscosity, which, in turn, can control final film properties such as toughness. These resins, called *aliphatic resins*, are prepared from monomers that consist of only carbon and hydrogen atoms. The characteristic chemical structure in the polymer backbone is a carbon-to-carbon bond ($-CH_2-CH_2-$) that links the individual monomer units together. Aliphatic ethylene and propylene homopolymer resins are nonpolar, have good clarity, and have relatively low melting points that range from $\sim 105^\circ C$ for LDPE to $125^\circ C$ for high-density polyethylene (HDPE), and $165^\circ C$ for PP. Polystyrene does not have a melting point but does exhibit a Vicat softening point at $T \leq 106^\circ C$. Because their monomers are derived relatively easily from petroleum feedstocks and the corresponding resins are used in large-volume packaging applications, resin cost/pound is not high, particularly for LDPE, HDPE, and PP. LDPE resins can be found, for example, as premade flexible bags and pouches and other large-volume packaging applications. HDPE, which is stiffer and tougher, is used as grocery bags and multiwall bags and bag liners. PP, as described above, has replaced cellophane film in many food-packaging applications. Some of these applications include overwrap for cigarette packs, snack-food packs, and pouches and bags for potato and corn chips. PB has found some applications as a meat-packaging film and as an additive for hot-melt adhesives.

Addition Polymerization (Copolymers). Polymers prepared from combinations of two or more monomers can give rise to plastic resins with a wide range of properties not possible from homopolymers. Resins of ethylene/propylene (E/P), ethylene/butylene (E/B), ethylene/hexene (E/H), and ethylene/octene (E/O) are possible combinations. The last three mentioned resins are gaining popularity as new aliphatic polymers with a much broader range of thermal and mechanical properties than previously possible. These resins, which are designated metallocene polyethylenes (mPEs) are prepared using the relatively new constrained geometry catalysts that allow the tacticity and branching of the polymer molecule to be better controlled, which yields polymers with narrower molecular distributions and lower densities. mPE resins are aliphatic copolymers somewhat endowed with the properties of the higher polarity copolymers described below.

Addition copolymers can also be prepared with ethylene and a polar second monomer. These polar monomers can include acrylic acid (AA), methacrylic acid (MAA), ethyl acrylate (EA), and vinyl acetate (VA). Because these monomers contain oxygen atoms in addition to carbon and hydrogen and because oxygen is a heavier atom and rich in electrons, the polymerization of these polar monomers results in a copolymer resin with higher polarity than carbon- or hydrogen-containing aliphatic resins. Resins of E/AA, E/MAA, E/EA, and E/VA are characterized not by an unusual chemical linkage between the repeated monomer units but rather by the polar nature of the copolymer in the polymer chain with the ethylene monomer. The E/AA and E/MAA resins, which are also called *acid copolymer resins*, have good clarity, low haze, and lower melt and sealing temperatures, and they can adhere strongly to polar substrates such as paper, foil, and some highly polar film resins. Thus, they have found use more in specialty packaging applications and in association with multilayer structures for meat, cheese, snack foods, and medical items. E/VA resins typically contain between 5% and 40% VA comonomer, with VA contents above about 25% used largely in hot-melt adhesive applications. Packaging-film applications employ resins with lower VA contents ranging from 5% to about 18%. These compositions are not too sticky, and films of these compositions can be handled on typical packaging machines; however, often slip and antiblock additives must be incorporated into the resin to ensure the proper slip level. Because of the low crystallinity, toughness properties at low temperatures, and low melting points, E/VA resins are used as a poultry and meat wrap, bag-in-box for liquid packaging, stretch film, and as ice bags.

Because E/AA and E/MAA resins contain free-acid groups, they can be partially neutralized to form a class of resins called *ionomers*. The ionomers serve some of the same market applications and have excellent hot-tack sealability, the ability to seal through contamination, and grease/oil resistance. These polar copolymer resins find use in packaging meat, cheese, breakfast cereals, and many other wet and dry products. They also are used as skin-packaging films for hardware products.

Condensation Polymerization. Some chemically reactive polar monomers can react with each other or with a second monomer to form a polymer chain and a small volatile second molecule. Many times that second molecule is water; thus, water seems to "condense" from the reaction. Removal of this second molecule leaves the relatively clean polymer behind. Resins made by this condensation polymerization route include polyamides or nylon, and polyester. Nylon resins are made from diamines and dibasic acids and are characterized by the amide group ($-$CONH$-$) in the polymer backbone. Nylon resins are identified by the number of carbon atoms in the monomers. Thus, homopolymer nylon 6 can be prepared from a monomer with six carbons in a straight line with reactive end groups on each end. Also nylon 6/6, 6/10, and 6/12 can be prepared from two monomers with the differing number of carbon atoms. Polyamides are regarded as semicrystalline resins with high melting points (175–275°C). As packaging films, they offer toughness, chemical resistance, resistance to oils and greases, and moderate gas barrier. Food products packaged in polyamide films include meats and cheeses.

Polyesters similarly are formed by reaction between an aromatic diacid such as terephthalic acid or the dimethyl ester of terephthalic acid and a polyalcohol such as ethylene glycol. These resins are characterized by the ester group ($-$CO$-$O$-$) linking the monomer units in the polymer backbone. Thus, these resins contain a stiff aromatic molecule within the polymer backbone as well as a flexible aliphatic portion. This stiff resin can be extruded into oriented high-tensile-strength film, metallized, and heat-seal coated to yield a packaging film in a thin gauge. In combination with other sealant coatings or laminations, polyester films are used as boil-in-bag pouches and for processed-meat packaging.

Chlorinated Vinyl Addition Polymerization. Polyvinyl chloride resin for film applications is prepared by suspension polymerization and employs the vinyl chloride ($CH_2{=}CHCl$) monomer. A homopolymer resin is polymerized from this monomer by a free-radical process. After purifying and removing excess water, this rigid resin must be blended with softeners or plasticizers to reduce its glass-transition temperature and render it a usable resin. For a more detailed discussion on how to modify melt temperature and glass-transition temperature in polymers, refer to Nielsen (1). Other additives such as lubricants and thermal stabilizers are blended into the resin as well. Packaging applications for PVC film include fresh meat, shrink film, and blister packs. For more details on how packaging film choices are made for different foodstuffs, refer to Jenkins (2).

MULTILAYER FILMS

Laminated film structures refer to multilayered structures composed of many monofilm layers. By effecting adhesion between the layers, more sophisticated film properties can be obtained in a single film. Heat-sealable films can provide the outside layers and can cover interior layers of nonthermoplastic materials such as foil, metallized film, or paper. Previously made films that contain light-blocking levels of TiO_2 can be printed before being laminated with a clear glossy, heat-sealable film, thus yielding an attractive multilayered film that can be heat sealed, providing protection of the product from ultraviolet (UV) degradation, and exhibiting striking printed panels. Because each monofilm of the laminate must have been previously prepared individually as a self-supporting film, the final multilayered laminates can end up thick and costly.

Coating of monofilms also provides a higher level of property sophistication to monofilms. Frequently, solvent coatings are applied to films to provide heat sealability or an enhanced gas and moisture barrier to the film. Vacuum metallization can be considered a form of coating. This technique enhances light opacity and gas- and moisture-barrier properties of the film. Individual coating thicknesses are usually less than 1 mil (25 μm); thus, coating a monofilm does not substantially add to its thickness.

Coextrusion describes a process in which a multilayered film is prepared by adhering several individual film layers within the body of the extrusion die. This process can prepare as many as nine separate layers of film within the same final film. Each resin may have its own extruder feeding a melt stream into the complex feed block attached to the die. Sometimes, one extruder will feed melt into two or more separate flow streams by the use of a stream divider within the feed block. This practice is fairly common for the extruder supplying the tie layer resin, which is the resin used to adhere two dissimilar resin types in the final multilayered film. Many factors must be considered when choosing the tie layer resin for a coextruded structure (3). Obviously, the initial cost for coextrusion equipment is high. However, this technique is popular and can provide outstanding film property combinations at a reasonable cost.

BASIC FILM–FORMING PROCESSES

Thermoplastic resins such as ethylene and propylene homopolymers and copolymers, and the condensation polymers described above, by definition have a melting temperature above which they are not rigid solids but rather viscoelastic materials. As such, they are soft plastic melts that can be formed into shapes convenient for packaging and other commercial uses. Several typical thermal processes are available for effecting this conversion from the small pellet supplied in the resin bag, box, hopper truck, or hopper railroad car to the final film structure. The following descriptions describe the preparation of monofilms; however, keep in mind that the coextrusion process is also possible for all these extrusion processes. Refer to Figure 4, which relates typical EVA resin melt flow requirements to film manufacturing process type.

Extrusion-Cast Film. In this process, the plastic resin pellets are introduced into the feed hopper of the extruder, where they are funneled down into the extruder barrel and onto the rotating screw (see Figure 1). As the screw rotates, it drives the pellets deeper along the hot barrel, compressing and heating them and applying force or shear so that the air spaces between the pellets are driven out and the pellets are heated to the melt temperature or softening temperature of the resin. The screw, which is driven by a powerful electric motor, is typically composed of three separate regions: (a) the *compression zone*, which is closest to the feed hopper; (b) the *transition zone*; and (c) the last region, which is called the *metering* or *blending zone*. Each zone occupies about one third of the screw length. The compression zone heats up the pellets driving out the air, the transition zone describes the length of the screw where the transformation from solid pellet to melted resin takes place, and the metering zone allows the melt pool to become homogenized so that a uniformly mixed melt stream is presented to the heated die. The die serves the purpose of fixing the dimensions of the final shape of the polymer. Thus, most dies have a circular cross section to the melt inlet, which then gradually transforms to the thin and wide cross section of the film. As the flat, thin sheet of polymer melt exits the die, it is quenched to a lower temperature below its melting point, thus solidifying it into the final and desired shape. Often the quenching is accomplished with water-cooled metal drums or rolls with a high-gloss chrome-plated and smooth finish so that the quenched surface on the film is flat and blemish-free. By controlling the takeoff speed of the quench roll at a faster rate than what the melt exits the die, the film thickness can be reduced and controlled. This differential in speed also impacts some final film properties, such as toughness, stiffness, and film clarity or haze. Basically, this stretching of the film melt as it is cooling causes the polymer molecules to become better aligned or oriented in the long direction of the film machine direction (MD). This molecular alignment is responsible for enhance stiffness and toughness properties. The film is then accumulated as rollstock on the windup turret of the cast-film line. Film widths of ≤ in 120 in. are possible by this process. The length of the film is defined by how much is wound on the roll, and usually as one film roll is being completed, the windup turret can be indexed around so that a new roll can be started without interrupting the continuous resin flow through the extruder and die. The rolls are then removed from the windup turret and slit to the width desired by the customer. Property-enhancing lubricants, stabilizers, or colorant additives can be added to the resins pellets at the feed hopper. They will become mixed with the melt stream by the extruder screw. These additives can be added as powders to the feed hopper or more likely will be added as a preblended concentrate in pellet form.

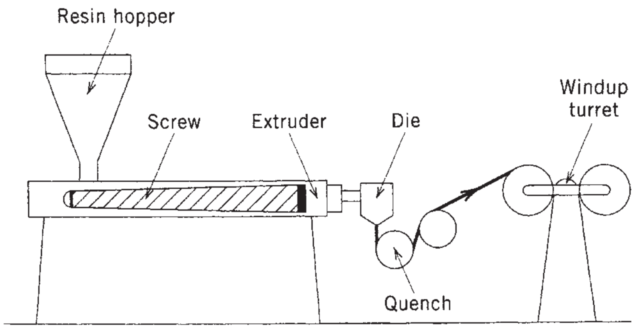

Figure 1. Cast-film line.

Extrusion-Blown Film. The blown-film process (Figure 2) is somewhat similar to the cast-film process in that a plasticating screw extruder is employed to convert the solid resin pellets into a uniform plastic melt. The blown-film process employs a circular or annular die to form the film, which is then stretched over and around a captured bubble of air. The film is usually air quenched, collapsed as a flat tube, and wound up on the windup stand. Sometimes, the bubble is slit in the vicinity of the nip rolls so that two sheets of film may be fed down to the windup stand. This bubble process can be oriented so that the film extrudes upward, downward, or in the horizontal direction. The bubble may be long but typically is 20–30 ft long. Bubble diameters may be 6 ft or more. The resin used in a blown film process must have a high melt strength to sustain the relatively high hoop stress and MD tension. This process requires that the melt emerge from the die then quickly flare out or inflate around the captured air

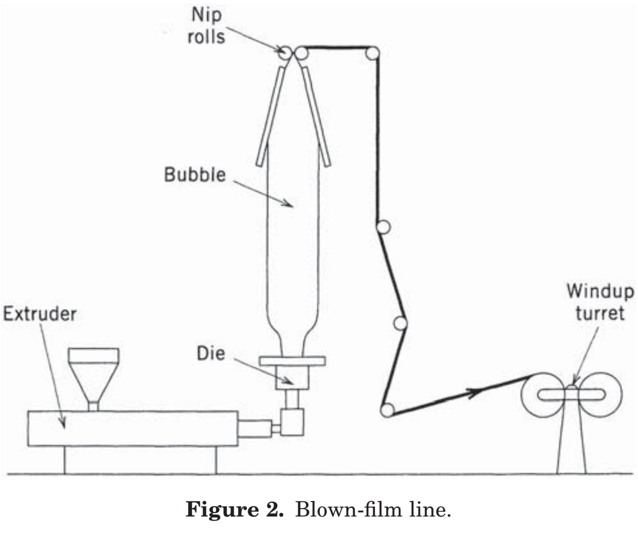

Figure 2. Blown-film line.

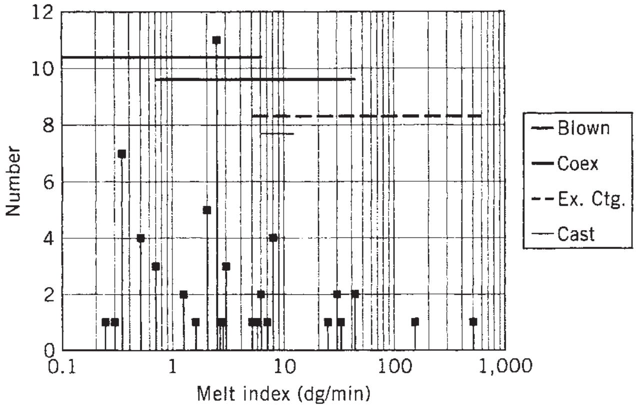

Figure 3. Resin meet flow vs. extrusion process.

bubble while it is being cooled. Thus, the polymer melt is being cooled and biaxially oriented at the same time. The ratio between the annular die diameter and the final bubble diameter defines the "blowup ratio" (BUR) for the film from this process. The die gap opening and BUR define the final film thickness. Because the blown film process requires such high polymer melt strengths, higher molecular-weight polymers must be used and are reflected in the typical melt index values of <1–5 dg/min for polyolefin resins (see Figure 3). Coextrusion-blown-film processes are useful for preparing multilayer films. Care must be taken to ensure that the tacky heat-seal layer ends up as the outside of the bubble and not the bubble inside, where it might stick to itself as the warm bubble is collapsed at the nip. One advantage of the blown-film process is that it yields a film tube and not a flat film with thick edge beads. Thus blown-film products can be more efficiently used because the thicker edge beads are not present and do not need to be removed or recycled.

Extrusion Coating. As this name implies, the extrusion coating process is employed to apply a thin layer of polymer film onto an existing film structure (see Figure 4). Thus, it is not usually used to make structural monoextruded or coextruded films. It is often used to apply a thin sealant layer to paper, foil, or plastic film. As Figure 4 shows, this process resembles a cast-film process. Extrusion coating requires that the exiting melt curtain quickly contact and adhere to the substrate film. Thus, the proper compatibility and adhesion between the substrate and the extruded resin is important as is the need for the resin to have a relatively high melt flow value (see Figure 3). Typical extrusion coating resin melt flow values can range from about 8 dg/min up to values of several hundred decigrams per minute. The adhesion between the melt curtain and the substrate is aided by the pressure on the nip roll. Because the high-melt-flow polymer is hot and quickly contacts both to the coated stock and the quench roll, the quench-roll surface is usually machined or treated to reduce adhesion. Chill-roll release additives can also be incorporated into the resin to prevent sticking (see the Extrusion coating article).

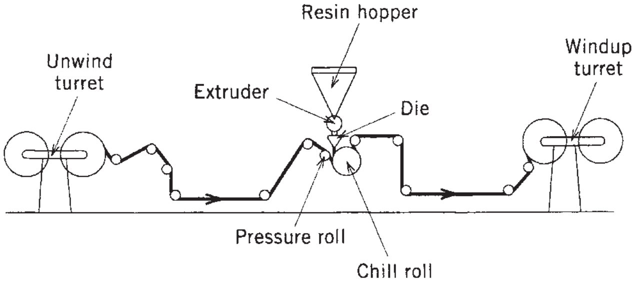

Figure 4. Extrusion coating line.

BIBLIOGRAPHY

1. L. E. Nielsen, *Mechanical Properties of Polymers*, Reinhold, New York, pp. 27, 31.
2. W. A. Jenkins, *Packaging Foods with Plastics*, Technomic Publishing, Lancaster, PA, 1991.
3. B. A. Morris, *TAPPI J.* **75**(8), 107–110 (1992).

General References

J. H. Briston, *Plastic Films*, 2nd edition, Godwin, London, 1983.

F. W. Billmeyer, Jr., *Textbook of Polymer Science*, Wiley, New York, 1965.

FILM, RIGID PVC

H. J. G. Van Beek
R. G. Ryder
Klöckner-Pentaplast of
America, Inc., Gordonsville,
Virginia

Poly(vinyl chloride) (PVC) is extraordinarily adaptable to custom compounding for desired performance. This diversity of physical properties at relatively low cost has been the driving force behind its popularity in the packaging industry.

HOMOPOLYMER PVC RESIN

Commercial PVC resin is a dry free-flowing powder produced by the polymerization of vinyl chloride monomer [see Poly(vinyl chloride].

Molecular Weight and Viscosity

The fundamental property of PVC is its molecular weight: a measure of its means polymer chain length and a parameter proportional to the resin's viscosity. In general, higher-molecular-weight (higher-viscosity) resins require higher processing temperatures and yield film or sheet with higher heat-distortion temperatures, impact resistance, and stiffness than do resins of lower average molecular weight. The processing equipment for generating film and sheet for the packaging industry demands low- to medium-viscosity PVC resins with relative viscosities of 1.75–2.10, in contrast to extrusion pipe and construction markets that typically use medium- to high-molecular-weight resins.

Heat Stability

All PVC resins are subject to thermal degradation during processing and must be compounded with appropriate heat stabilizers to minimize discoloration. These stabilizers serve to scavenge free radicals that perpetuate degradation, as well as hydrogen chloride, the principal degradation product. The highly complex thermal degradation mechanism proceeds by an "unzippering" process whereby liable allylic chlorides act as reaction sites for the liberation of hydrogen chloride and the formation of conjugate-bonding systems. When the conjugation exceeds six bonds in length, color development begins and, if unchecked by ample and appropriate use of heat stabilizers, will progress from a very subtle yellow tint to amber and, finally, to black. Commerical processing methods occasionally generate "burned" material that has reached these initial stages of degradation. It is important to recognize that such thermal degradation is both time- and temperature-dependent and that although stabilizers retard the rate of degradation during processing, they do not prevent it. The stabilizers also help protect the film or sheet during subsequent processing (e.g., thermoforming) and during the lifetime of the package itself.

COMPOUNDING FOR PROPERTIES

Among all polymers used in the packaging industry, PVC is widely regarded as the most versatile and suitable for custom compounding to deliver special properties (see Additives, plastics). It may be compounded for high clarity and sparkle or for maximum opacity and it accepts a full range of custom colorants (see Colorants). Properly compounded, PVC film and sheet are approved for food and drug contact and are available with residual vinyl chloride monomer (VCM) levels below 10 ppb. Examples of what custom compounding can produce are shown in Table 1.

Table 1. Examples of Custom Compounding

Higher heat-distortion temperatures for hot-fill packaging
Ethylene oxide (ETO) sterilizable film without water-blush for medical devices
Improved low-temperature impact resistance for drop tests of shipping cartons
Improved UV resistance
Improved outdoor weatherability
Improved sealability (impulse heat, RF, ultrasound)
Denesting formulations for machine-fed blisters
Static-resistant formulations
Optimum performance in laminating to other materials (PVDC, PE, etc.)
Formulations for vacuum metalizing
Improved printability
Absence of "white break" or crease whitening

After identification of such desired properties for the specific packaging application, the compounder selects a suitable resin viscosity. If the film is to be approved for food or drug contact, the resin's VCM level must be low enough before processing to ensure that the resulting film will meet all customer requirements on residual VCM. A heat stabilizer must then be selected. Tin mercaptides are frequently chosen because of their high efficiency, excellent early color, good light stability, and excellent crystal clarity in the product (1). Some of these stabilizers (octyl tins) are cleared for food and drug contact. Uncleared options include lead stabilizers, which are limited to opaque systems, and combinations of barium, cadmium, and zinc. Although there are a few calcium/zinc systems in limited use in food packaging, the tin stabilizers dominate the packaging field. Octyl tins are the principal systems used in food and pharmaceutical packaging (2). Stabilizers are also available that impart improved UV resistance. All of the stabilizers mentioned above are used in rigid PVC at only very small loadings.

In contrast, impact modifiers may constitute up to 15% of the product's weight. As a result, the proper selection and loading of impact modifier is an important compounding decision. Clear packaging films typically contain MBS impact modifiers because of their superior clarity, heat stability, and room-temperature efficiency. ABS modifiers are good for opaque products, and chlorinated polyethylene (CPE) and acrylics (see Acrylics) are often selected for outdoor applications and/or low-temperature environments in opaque systems. Pigments may then be added to provide custom color, and titanium dioxide is generally used at levels as high as 15% to provide the desired level of opacity. Fillers may be used for cost reduction in opaque systems and, in many cases, to improve such physical properties as impact strength, stiffness, and heat-distortion temperature. Present in very low levels are a variety of proprietary lubricants and processing aids that are necessary to facilitate processing and to provide desirable properties such as slip, denesting, and improved thermoformability for the film processor/packager. Flame retardants, antioxidants, coupling agents, antistatic agents, phosphite stabilizers, and a host of additional additives may be included if necessary. Because of this tremendous facility for custom compounding, and the variety of products that result from it, Table 2 must be considered only as a general guide to typical rigid PVC properties.

FILM AND SHEET PRODUCTION METHODS

Extrusion (see Extrusion) and calendering are the principal methods of producing rigid PVC for the packaging industry. Extrusion is used to produce very thin blown films (see Film, flexible PVC) as well as heavy-gauge sheeting nearly 1 in. (2.54 cm) thick produced by sheet-die methods. Calendering requires a much greater capital investment, but it offers much greater production rates, superior gauge control (cross direction and machine direction) (±5%), superior cosmetic quality including clarity, and much wider versatility in accommodating gauge and

Table 2. Typical Physical Properties of Rigid PVC (Clear)

Property	Test Method[a]	Units	Values
Specific gravity[b]	D1505		1.30–1.36
Yield (1.30 sp gr)	D1505	in.^{2} lb (cm^2/g)	
7.5 mil (0.19 mm)			2850 (40.5)
10.0 mil (0.25 mm)			2130 (30.3)
12.0 mil (0.30 mm)			1780 (25.3)
15.0 mil (0.38 mm)			1420 (20.2)
20.0 mil (0.51 mm)			1070 (15.2)
Tensile strength (yield)	D882	psi (MPa)	6500–7800 (44.8–53.8)
Tensile modulus	D882	psi (MPa)	$2.5–4.0 \times 10^5$ (1723–2757)
Elongation (break)	D882	%	180–220
Izod impact (1/4 in. or 6.4 mm)	D256	ft · lbf in (J/m)	0.5–20.0 (26.7–1068)
Gloss, 20°	D247		120–160
Heat-distortion temperature (264 psi or 1.82 MPa)	D648	^{c}F (°C)	158–169 (70–76)
Cold-break temperature	D1790	^{c}F (°C)	14 to −40 (−10 to −40)
WVTR (38°C, 90% rh)	DIN53122	g (100 in.^{2} · 24 h) [g (m^2 · day)]	
7.5 mil (0.19 mm)			0.30 [4.7]
10.0 mil (0.25 mm)			0.20 [3.1]
Surface resistance	DIN53482	Ω	10^9–10^{13}
Specific resistance	DIN40634	Ω · cm	10^{13}–10^{15}
Dielectric strength	DIN40634	kV/mm	60–70
Specific heat (20°C)		kJ/(kg · K)	0.8
Thermal conductivity		W/(m · K)	0.16
Linear thermal expansion		K^{-1}	$7.0–8.0 \times 10^{-5}$
Infrared absorption[c] (3–18 μm)			Various intensities

[a] Ds are ASTM test methods, and DINs are German (Deutsche) Industrial Norm test methods.
[b] Indirectly related to amount of impact modifier. Increased opacity may raise to 1.40.
[c] 20 mil (508 μm) unmodified.

width changes. Calendered film and sheet generally have better dimensional stability, which provides thermoforming consistency throughout a given lot. Rigid calendered PVC is available in thickness of 2–45 mil (51–1143 μm) with gloss, matte, or embossed surfaces, either in rolls or in sheets up to about 60 in. (1.5 m) wide. Calendering is the principal means of processing rigid PVC film for packaging.

Calendering

In a modern rigid PVC calendering operation, compounding is done by computer-controlled electronic scales that supply precise amounts of each ingredient to a high-intensity mixer designed to incorporate all liquids into the resin particles and to secure uniform distribution of all powdered ingredients. Blending is generally done for a specific time period and to a specific temperature. The still-dry, free-flowing blend is then charged to a feed hopper where it is screw-fed into a continuous mixer such as an extruder or kneader. Under the action of this mixer's reciprocating screw in the confined volume of the mixing chamber, the blend begins to flux or masticate into the plastic state. It is then forced out of the barrel of the mixing chamber. The continuous strand may be chopped into small fist-sized buns of hot material or simply exit as a continuous rope. This material may then be directly conveyed to the calender, or it may first pass through a two-roll mill. The calender is a large unit, typically consisting of four or five heated rolls designed to process masticated PVC buns into a continuous web of designated width and thickness (see Figure 1).

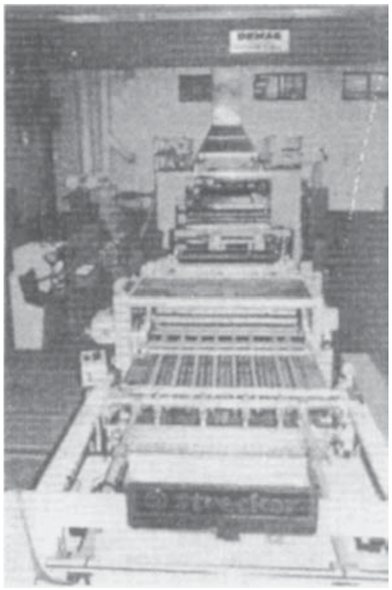

Figure 1. PVC calender.

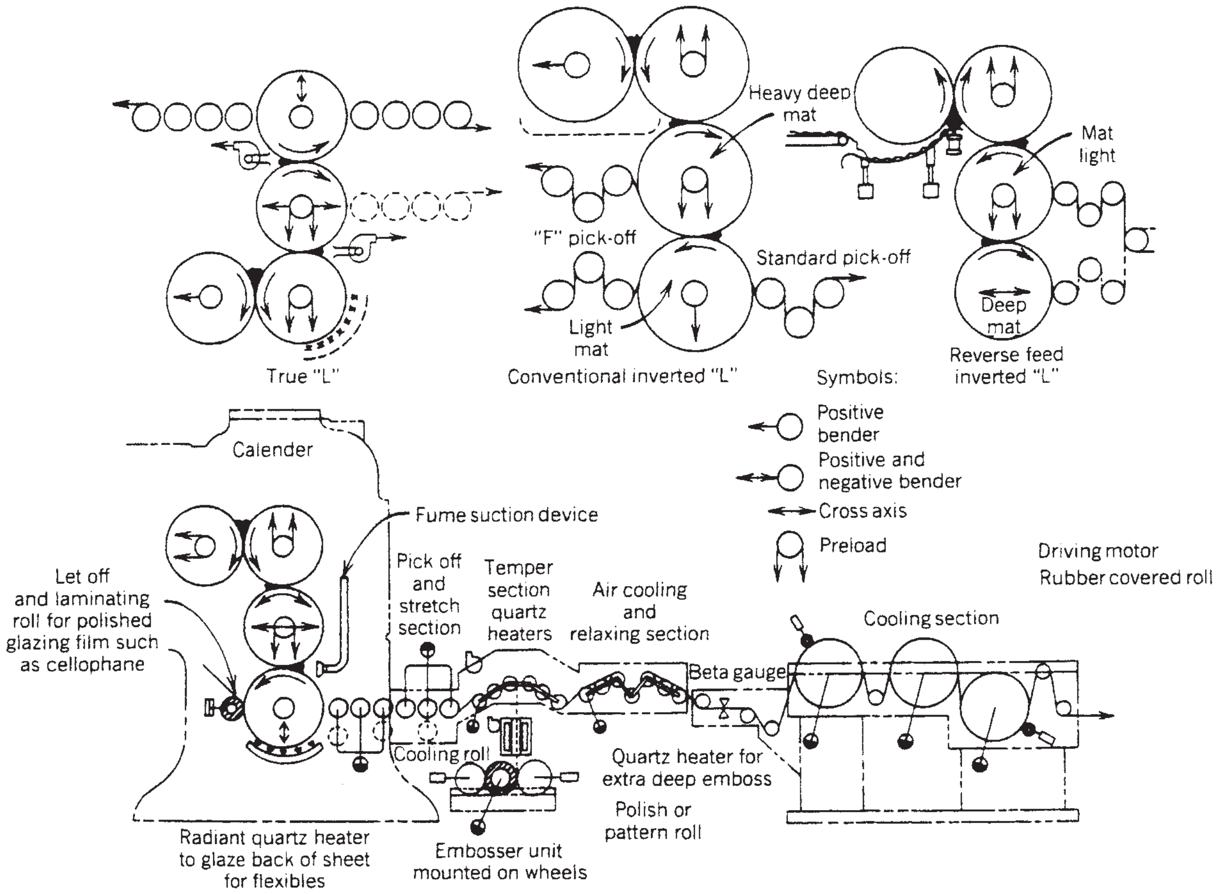

Figure 2. PVC calender operation.

Figure 2 illustrates the typical "L" and "inverted L" configurations generally used for rigid and flexible production, respectively (3). The calender rolls have separate temperature and speed controls as well as roll bending and crossing capabilities to control profile across the web. Proper use of these controls, along with speed and stretch in the takeoff train, allows the production of an extremely flat sheet with a profile tolerance of less than ±5% across and down the web. Such control is maintained by continuous beta scanning equipment that traverses the web constantly and calls for adjustments in nip openings, skew, and/or roll bending. Such constant inprocess monitoring and continuous profile adjustments is a significant advantage of calendering over other processing methods. By using special grit-blasting techniques, the third and fourth calender rolls may be custom-surfaced to generate a uniform two-sided matte product. Alternatively, one or more downstream embossing stations may be utilized to produce a custom surface on one or both sides of the film. Antistatic and or de-nesting slip agents may be applied to the surface(s) of the web after separating from the last calender roll. Finally, after the cooling section, the web is cut in-line into finished sheets or wound about a core into a master roll for subsequent custom slitting. Typical slit widths are made to the nearest 1/32 in. (0.8 mm) on 3- or 6-in. (7.6- or 15.2-cm) cores with roll diameters of 14–40 in. (36–102 cm).

PACKAGE PRODUCTION BY THERMOFORMING

Most commercial PVC packages are the result of thermoforming rollstock into custom blisters. In those cases where further enhancement of PVC's own oxygen and/or moisture barrier properties are required, barrier materials (see Barrier polymers) such as PE, PVDC, or fluoropolymer film (see Film, fluoropolymer) may first be laminated to the PVC web prior to thermoforming. Thermoforming processing conditions are generally dictated by the PVC material itself regardless of lamination. Since PVC is an amorphous material (see Polymer properties), it softens over a large temperature range and has no sharp melting point. There are two temperatures ranges in which rigid PVC can most readily be formed (see Figure 3). It must be emphasized that these temperatures are actual film temperatures that must be measured with thermocouples located directly on the surface of the film (heating-element temperatures are very much hotter).

The first plateau at 221–275°F (105–135°C) is the elastic area best for most high-speed form/fill/seal pressure-forming machines (see Thermoform/fill/seal). In this area, the film has sufficient hot strength to elongate or stretch to the conformation of the mold. Between 275°F and 338°F (135°C and 170°C) is a region of inadequate elongation for proper forming; and attempts to process in this area may result in blowing holes, tearoffs, and poor

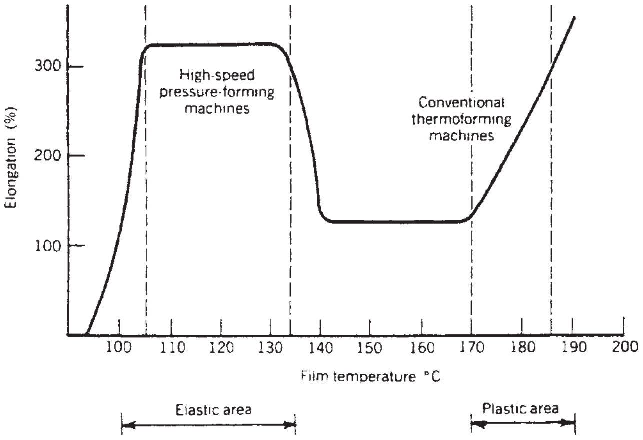

Figure 3. Temperature ranges for PVC thermoforming.

definition. Failure to respect this "no man's land" is among the most common reasons for thermoforming problems seen in the field by PVC technical service representatives. The elongation quickly increases in the film at 338°F (170°C), and excellent forming is possible up to about 365°F (185°C). This is the range for optimum performance for conventional commercial thermoforming machines (see Thermoforming). Beyond 365°F (185°C), the material will sag excessively, resulting in webs, wrinkles, holes, or thin areas. In general, rigid PVC film thermoforms best when the film temperature is slightly above 338°F (170°C), with relatively cool molds (as low as 50–60°F or 10–16°C), and when plug assist temperatures are about 194°C (90°C). Mold design should avoid exceeding a 1:1 draw ratio, and a few extra degrees of draft and extra radius on corners will help avoid problems.

Film Shrinkage for Optimum Forming

Since distinct types of equipment are used in each of the two forming regions, it is particularly important that the PVC-film supplier have a thorough understanding of the appropriate shrinkages to be put into the feedstock for each type of machine. PVC destined for pressure-forming over the lower temperature region should have its shrinkage controlled by the producer at 284°F (140°C), a temperature that will release all plastic memory relevant to the processing range of 221–275°F (105–135°C). Typically, best results are achieved with PVC film having 284°F (140°C) shrinkages of 2–5% in the machine direction and 0–1% in the transverse direction. Such very slight growth in the transverse direction is desirable to compensate for the repeating necking-in that may otherwise occur across each line of blisters such as those used for press-through packaging of ethical drugs.

In the higher temperature range for conventional thermoforming, film shrinkages should be controlled by the film supplier at 350°F (177°C), a temperature that will release all plastic memory relevant to this higher processing range. Best results are typically achieved with PVC film having 350°F (177°C) shrinkages of 4–8% in the machine direction and −1 to +1% in the transverse direction. Excessive shrinkages may cause the film to pull out of the chains, clips, or frame. Insuffcient machine direction shrinkage and/or excessive transverse growth may led to webbing. Thermoforming machine operators often respond to such webbing problems by reducing operating temperatures to prevent excessive sag, but this step can result in blowing holes and poor wall distribution because it takes the film out of the optimum thermoforming temperature range and elongation falls off rapidly. Careful shrinkage control is critical to successful thermoforming of rigid PVC film with all types of forming equipment. Proprietary process controls are available in modern PVC calendering technology to custom produce film with the proper shrinkages for optimum thermoformability within each temperature region and on each design of forming equipment.

PACKAGING MARKET

U.S. consumption of calendered rigid PVC film and sheet in 1994 is estimated at 523×10^6 lb (237,000 tons), not including an additional 30% for extruded sheet. About 63% of this calendered production was used in packaging (see Table 3). Total 1994 consumption of calendered rigid PVC film and sheet for packaging was 330×10^6 lb (150,000 tons).

Table 3. U.S. Markets for Calendered Rigid PVC Film and Sheet

	Market 10^6 lb (10^3 tons)
Packaging (FDA-grade)	
Food	25 (11.4)
Pharmaceuticals	30 (13.6)
Medical devices and supplies	10 (4.5)
Total packaging (FDA grade)	65 (29.5)
Packaging (general-purpose)	
Thermoforming—blisters, clam shells, etc.	225 (102.3)
Vinyl boxes and lids	35 (15.9)
Static control thermoforms	5 (2.3)
Total general-purpose and specialty packaging	265 (120.5)
Specialty and industrial applications	
Printing and stationery	90 (40.9)
Cooling tower and wastewater fill media	40 (18.2)
Artificial Christmas trees	30 (13.6)
Furniture lamination	10 (4.5)
Construction and flooring	10 (4.5)
Floppy disks	8 (3.6)
Litho mask	5 (2.3)
Total specialty and industrial applications	193 (87.6)
Total packaging (61.5%)	330 (150.0)
Total nonpackaging (36.5%)	193 (87.7)
Total rigid PVC film and sheet	523 (237.7)

Source: Klöckner-Pentaplast of America, Inc.

REFERENCES

Cited Publications

1. A. A. Schoengood, ed., *Plast. Eng.* **32**(3), 25 (1976).
2. M. McMurrer, ed., "Update: PVC Heat Stabilizers" in *Plastic Compounding*, Resin Publications, Cleveland, OH, 1980, pp. 83–90.
3. L. R. Samuelson, *Plast. Des. Process.* **21**(8), 14 (1981).

General References

P. Bredereck, *J. of Vinyl Technology* **1**(4), 218–220 (1979). *Guide to Plastics*, McGraw-Hill, New York, 1979, p. 27.

M. McMurrer, ed., *Plastic Compounding 1984/85 Redbook*, Vol. 7, No. 6, Resin Publication, Cleveland, OH. 1985.

M. McMurrer, ed., "Update—U.V. Stabilizers," *Plastic Compounding*, Resin Publications, Cleveland, OH, 1985, pp. 40–57.

Thermal Stabilization of Vinyl Chloride Polymers, Technical Report 3250, Rev. 7/68, Rohm & Haas, Philadelphia, 1968.

L. R. Samuelson, *Plastics Design and Processing* **21**(8), 13–15 (1981).

V. Struber, *Theory and Practice of Vinyl Compounding*, Argus Chemical Corp., New York, 1968.

FILM, SHRINK

George D. Wofford
Cryovac Division, W. R. Grace &
Co.-Conn., Duncan, South
Carolina

Shrink film is a name given to a unique family of films that are distinguishable by their attributes, production processes, and end uses. They are composed of two basic categories: poly(vinyl chlorides) (PVCs) and polyolefins. Although most plastics exhibit some amount of free shrink and shrink force at elevated temperatures, true shrink films (sometimes known as *heat-shrinkable films*) provide a high degree of free shrink with a controlled level of shrink force over a broad temperature range.

Shrink force must be controlled to prevent crushing or deforming the product being packaged. Providing the proper level is important to the marketing of toys; games; cards, calendars, and other paper products; hardware; food; and a variety of merchandise where a tight, glossy package appearance is essential.

Shrink films are produced by uniaxially or biaxially orienting a sheet or tube of film by imposing a draw force at a temperature where the film is softened but kept below its melting point, then quickly cooled to retain the physical properties generated during orientation. It is important to note that the orientation temperature occurs between the vicat softening point (ASTM D1525) and the melting point, but is not directly related to the glass-transition temperature (T_g) as some literature would indicate. This can be seen in Table 1, which compares glass-transition temperatures to vicat softening points for several polymers.

Table 1. Glass-Transition Temperatures and Vicat Softening Points of Common Polymers

Polymer	T_g (°F)	Vicat (°F)
Polystyrene	181–201	208
LLDPE	−188 to −5	177–220
Polypropylene	7–41	307
PVC	158–176	183

Prior to orientation, the molecules of the film are randomly intertwined, exhibiting no particular alignment. However, when a draw force is imposed, the amorphous regions are straightened and oriented to the direction of force. By applying proper cooling, the molecules will be frozen in this state until sufficient heat energy is applied to allow the chains to shrink back. One can visualize this phenomenon by stretching a rubber band and dipping it into liquid nitrogen. It will remain stretched as long as it is kept at sufficiently cold temperatures. However, when enough heat energy is applied, the rubber band will shrink back to its original relaxed state.

Orientation on a commercial scale can be achieved using either of two methods: a tenter-frame or a bubble process. Tenter-frame technology produces a variety of "heat-set" products, of which biaxially oriented polypropylene (BOPP) is the most common. Heat setting is a process whereby a film is reheated in a constrained state such that the shrink properties are destroyed. Other important characteristics derived from orientation (optics, tensile strength, and modulus) remain intact, however. Current tenter-frame technology does not allow the production of materials with a high degree of free shrink and shrink force due to the mechanics and thermodynamics of the process.

In the tenter-frame process, a flat sheet is produced and cooled on a chill roll, which is usually immersed in a waterbath. The sheet then proceeds through a machine-direction orientation (MDO) unit, where it is heated and stretched to the desired ratio. On exiting the MDO unit, the sheet enters the transverse-direction orientation (TDO) unit, where it is reheated and stretched. BOPP is commonly stretched 700–800% in both the machine and transverse directions. After exiting the TDO, the material is wound into large mill rolls for aging (aging allows secondary polymer crystallization, ensuring film flatness and roll uniformity) and converting. Some tenter-frame systems have additional downstream equipment for retensilization and further heat setting or annealing. The primary suppliers of tenter-frame systems are Brückner (Germany), Mitsubishi (Japan), and Marshall & Williams (United States).

The second commercial method is the bubble process, sometimes referred to as a *tubular process*. A primary tube is produced by blowing the film onto an external mandrel or casting it onto an internal mandrel. Water is used to help cool the tube at this point.

After it has been cooled, the tube is reheated and air is used to inflate it into a bubble. On inflation, it is oriented

Table 2. U.S. Shrink-Film Offerings

Polyolefins	
Polyethylene monolayer	DuPont Clysar HP, LLP Cryovac D601
Polyethylene multilayer	Cryovac D955, D940, RD106, D959
Polypropylene/monolayer ethylene–propylene copolymer	DuPont Clysar EHC, CHS, RSW Okura Vanguard 100 Gunze PSS
PP/EPC multilayer	Cryovac MPD2055, MPD2100, J960, J961 Okura Vanguard 501 Intertape Exlfilm IP-33 DuPont Clysar EZ
Poly(Vinyl Chloride) (PVC)	
Biaxially oriented	Reynolds Reynolon 1044, 2044, 3044, 4044, 5044 Allied Krystaltite T111, T122, T133, T144, T15, R11, R22, R44 Gunze Fancywrap
Preferentially oriented	Reynolds Reynolon 3023, 4061, 5032, 7052 Allied Krystaltite PT152
Specialty Films	
Aroma and oxygen barrier	Cryovac BDF2001, BDF2050
Moisture barrier	Cryovac BDF1000
Moisture, gas, and aroma barrier	Cryovac BDF3000

in both directions simultaneously, typically 700–800% for BOPP. Other films are oriented 200–1000% in either direction. After orientation, the bubble is cooled using an air ring. The tube is slit and separated, and then each half is wound onto mill rolls for aging and converting. Additional in-line processing, such as corona treatment for materials that will be printed at a later time, is often used with this technology. Commercial tubular orientation equipment suppliers include Prandi (Italy) and Gloenco (England). ICI, the developer of much of the early technology, exited this market in the mid-1980s.

Shrink films were limited to monolayer constructions until recently. Technological advances over the past decade have led to the development of multilayer coextrusions. These process improvements have enabled films to be designed with greater control over desired characteristics to meet a much broader range of packaging requirements. Table 2 lists the major shrink films offered in the U.S. market.

The key attributes that are important to shrink films include shrink, sealability, optics, toughness, and slip. Each of these attributes is composed of several facets. For shrink properties, they are onset temperature, free shrink, shrink force, shrink temperature range, memory, and overall package appearance. For sealing properties, one must also consider ease of trim sealing, trim seal strength, trim seal appearance, static lap sealability, and thermal lap sealability. For optics, it is important to consider clarity, gloss, and haze.

There are three aspects to toughness: impact strength, slow puncture resistance, and tear resistance. Impact strength measures how well a material resists a sudden force, such as when a box is dropped from a certain height. Slow puncture resistance measures how well a material resists a gradual increase in tension, such as when someone tries to poke a finger through a piece of film. Tear resistance is the measure of how well a film resists tearing once it has been nicked or abraded.

Finally, for slip, it is important to consider both hot slip (such as a warm package being placed in a carton during packoff) and cold slip (important in removing a package from a carton). Many other attributes must be considered for any given application, depending on the nature of the product being packaged. Film properties along with potential advantages and disadvantages are shown in Tables 3, 4.

Packaging equipment for shrink films are available in a variety of models and price ranges, depending on the features desired (see Wrapping machinery, shrink film). An important attribute for equipment is the sealing method. Until recently, most sealing systems for typical shrink-film applications used a hot wire in order to seal and cut the film at the same time. More recently, hot-knife systems have gained popularity on many models because of their increased durability.

The wire or knife seals the film against a pad that is covered with Teflon tape. Impulse seals are also employed for a number of applications. Time, temperature, and pressure are the three variables that must be balanced to optimize seal quality. If the time that the sealing head is held on the film is not long enough, the temperature is too low, or the pressure is insufficient or uneven, the seal quality will be poor. Conversely, if the sealing temperature or the pressure is too high, the result may be a weak spot just behind the seal area, causing failure during distribution.

To prevent seal failure problems, there must be an appropriate amount of time for cooling of the seal prior to any force being applied to the film. This cooling time

Table 3. Typical Shrink-Film Properties

Film Type	Unrestrained Shrink (% at 260 °F)	Clarity (%)	Ball Burst (cm/kg)	Coefficient of Friction
Polyethylene monolayer	70–80	40–65	16–24	0.11–0.14
Polyethylene multilayer	70–80	80–90	21–28	0.22–0.32
Polypropylene or EPC monolayer	25–45	75–82	4–10	0.26–0.38
PP/EPC multilayer	50–60	75–85	10–20	0.30
PVC, biaxial	30–55	75–80	6–10	0.20—blocked

Table 4. Advantages and Disadvantages of Various Film Types

Film Type	Advantages	Disadvantages
Polyethylene monolayer	Low cost High slip Strong trim seals More dimensionally stable than PVC Printable	Low modulus Narrow shrink temperature range
Polyethylene multilayer	Excellent optics Low cost Strong trim seals Broad shrink temperature range High abuse resistance Printable	Low modulus
PP or EPC monolayer	High modulus High gloss Low cost High shrink force	Low abuse resistance Easy tear High shrink temperature required Low seal strength
PP/EPC multilayer	High gloss Low cost Strong trim seals Broad shrink temperature range High abuse resistance High modulus Printable	Low abuse resistance Easy tear High shrink temperature required Low seal strength
PVC, biaxial	Low shrink temperature High modulus Low shrink force	Weak seals Noxious fumes created during sealing Corrosion problems Poor machinability Poor slip

allows the molten seal to solidify and prevents it from wrinkling or bunching. PVC shrink films can exhibit another sealing problem. They form a carbon buildup on the seal head, which must be cleaned regularly; otherwise, this will create a charred seal on the package. Some of the more common equipment manufacturers include Doboy, Great Lakes, Hanagata, Ilapack, Omori, Shanklin, and Weldotron (see also Sealing, heat).

One other piece of equipment needed to provide a sharp, tightly finished package is a shrink tunnel. In order for adequate shrinkage to occur, the package must be exposed to the correct temperature and airflow for the proper amount of time. The ultimate goal is to have a package that is tightly shrunk with no excess material or "ears" on the corners of the finished package. PVC films do not require the same level of temperature control as do polyolefin films, since they shrink more easily when exposed to heat. Shrink tunnels are generally purchased in conjunction with packaging equipment to ensure correct sizing for speed and product application.

BIBLIOGRAPHY

General References

J. L. Throne, *Plastics Process Engineering*, Marcel Dekker, New York, 1979.

R. J. Young and P. A. Lovell, *Introduction to Polymers*, 2nd edition, Chapman and Hall, London, 1991.

E. C. Bernhardt, *Processing of Thermoplastic Materials*, Krieger, Malabar, FL, 1974.

FILM, STRETCH

Thomas B. Brighton
Tenneco Packaging, Deerfield,
Illinois

Unitization with elastic plastic films (stretch film) is a U.S. innovation that began in the early 1970s and has spread throughout the world to become the most widespread means of containing unit loads. This article focuses on the selection, use, and properties available for stretch packaging unit loads and individual products. Little reference is made to mechanical equipment systems available to accomplish stretch-film unitization.

SAVING WITH STRETCH FILM

Stretch film is a product that thousands of companies throughout the United States and abroad used every day in tremendous quantities. And, although acceptance and audience of stretch film continue to grow, the majority of stretch-film users know little of its true potential or how it has developed over the years.

INTRODUCTION

Stretch film is such an effective product that it is often easy to take all that it does for granted. This section is intended to serve as a "reminder" of (a) the benefits of unitizing and (b) the additional benefits that you reap by unitizing with stretch film. As part of the discussion on the benefits of stretch film, the testing of packages and unit loads are addressed. Finally, in order to give you background knowledge on stretch film, this section also reviews the development and refinement of stretch film over the years. All these issues are covered under the following sections:

- Why Unitize?
- Why Unitize with Stretch Film?
- Testing Packages and Unit Loads
- The Evolution of Stretch Film

Why Unitize?

Unitization is defined as a process in which smaller individual items are gathered and made into larger unit loads.

The benefits of unitizing products are many. Although unitization can be achieved with other packaging materials, none does it as effectively and cost-efficiently as stretch film. But before discussing the merits of stretch film, it is important to first understand why its necessary to unitize. Here are the reasons.

Lower Handling Costs. In general, whenever a load of packaged products increases in quantity, size, and weight, the cost per unit handled becomes lower. Unitizing products, therefore, significantly reduces handling costs.

Labor Savings. Without exception, the handling of loose boxes is more time-intensive than handling a unitized load. Thus, another benefit of unitization is the amount of labor hours saved in the movement and shipment of packaged goods. The end result is a quicker flow of goods throughout factories, warehouses, and cross-dock operations while utilizing fewer hands.

Transportation Savings. Since unitizing accelerates the speed at which goods are moved, carrier vehicles spend less time at unloading/loading docks. This reduction in unloading/loading time provides valuable cost savings to the company that unitizes and the customers receiving its prodcuts.

Protection. The protection that unit loads afford an operator are threefold:

1. Unit loads reduce incidents of pilferage and theft because packages from an enclosed load are difficult to remove. Moreover, unit loads are much easier to track than individually packaged products, making the "disappearance" of goods more detectable.
2. Unit loads, which are placed on pallets and moved by lift truck, are less likely to suffer damage in transit than lose boxes carried by hand, because lift trucks keep pallets closer to the ground. For instance, whereas small boxes (≤ 20 lb) may often receive impacts from 30 in. or higher when accidentally dropped, a unit load on a pallet will seldom receive 12 in. in drop.
3. It is less likely in LTL (lift-truck load) shipments that dense, heavy items will be parked on top of palletized unit loads. Hence, your goods stand a greater chance of not being damaged. This benefit, however, does not hold true for cartons shipped individually.

Inventory Control. Unitizing products facilitates improvements in control of inventory since large unitized loads (as opposed to parcels of smaller ones) can be identified, counted, and managed more easily.

Customer Service. Customers appreciate the effects of unitizing because it allows them to unload their trailers and move goods through their warehousing systems more efficiently.

Why Unitize with Stretch Film?

From the advantages listed, the importance of unitizing is clearly evident. What is equally important to realize is that stretch film accomplishes each of these unitizing functions better than any other packaging material. Also, stretch film performs additional functions that other unitizing materials simply cannot:

- *Low Supply Cost*. Compared to other packaging and bundling materials, stretch film is the lowest in cost to use because it offers the most yield for the dollar.
- *Protection from Moisture, Dirt, and Abrasion*. Stretch film protects against these elements, safeguarding the goods it wraps.
- *Reliable Performance*. With stretch film, you can quickly see the holding performance and protection it offers. The holding power, however, of other packaging materials such as adhesives is not always immediately noticeable since they can unravel, loosen, or come undone without being noticeable a few minutes or hours after observation. Stretch film, manufactured by a company committed to quality, will produce consistent results every time it is used.
- *Automation*. Stretch-film machines are either partially or fully automated, which improves the productivity of the packaging process, reduces labor, and alleviates back-breaking and time-consuming work.
- *Scan-through Optics*. The clarity of the stretch film enables UPC codes to be quickly read and scanned while protecting labels and lot codes printed underneath the film.
- *Ease of Removal*. Stretch film only clings to itself and not surfaces, making its removal fast, clean, and easy.
- *Elimination or Reduction of Other Packaging Materials*. The superior load-holding capability of stretch film either eliminates the need for or helps scale down the bulk of other packaging materials (e.g., in some cases, stretch film may enable thinner cardboard cartons to used for packaging goods).

- *Recycling.* Stretch film is recyclable. In fact, several stretch-film manufacturers will pick up and recycle your stretch film if you qualify for their recycling programs.

Testing Packages and Unit Loads

Stretch film saves you money. By offering superior unitizing and protective capabilities, it drastically reduces product damage, which contributes to your bottom line. But you do not have to take anyone's word for it. There are two in-plant tests you can perform to get an initial feel for the durability of the unit loads you wrap in stretch film before sending them off to your customers.

The first preshipment test is "test course handling." In this test a lift truck equipped with forks or slip sheet attachment approaches the unitized load, picks it up, accelerates, corners, decelerates, and sets the load down. The lift truck then repeats this same test once again, except this time moves in reverse. A typical test sequence includes two to seven repetitions, with an average of four repetitions for the assurance required by most users.

The second preshipment test is the "free-fall drop." This test does exactly what its name implies. In this test, one end of a unit load is raised to a specified height of 3–12 in. and released to fall flat on the floor. The drop is then repeated on the opposite end of the unit load. Drop height will depend on the weight of the unit load and the assurance level that is desired.

Further shake-table or vibration-table test procedures will provide you with stretch-film load–force data for your products. It is recommended that you work closely with your local stretch-film packaging sales professional when packaging new products or considering stretch-film changes.

The Evolution of Stretch Film

Although many people enjoy the benefits of stretch film today, stretch film was not developed overnight. The creation and development of stretch film has been a gradual process, one that continues to undergo refinements to this day. For a better idea of where stretch film has been and where it's headed, let's take a look at this timeline:

NEW PACKAGING SOLUTIONS

When you mention stretch film, most people conjure up the image of a load of boxes or goods wrapped on a pallet. For good reason. This application is the most popular one for stretch film. But an "on pallet" application is just one of hundreds that stretch film is capable of performing. All it takes is a little imagination and ingenuity to customize stretch film for your own uses. An increasing number of companies are looking to stretch film to bundle and package goods once wrapped in other materials such as tape, twine, strapping, and corrugated boxes. In this section, some of these innovative applications and the benefits derived from them are shared with you under the following headings:

- Stretch-film advantages
  - Versatility
  - Protection
  - Productivity
- Cost benefits

Year	Machine Evolution	Film Development	Volume and Cost per Average Unit Load Wrapped
Early 1960s		Shrink-wrap use begins to grow in Europe	
1965		Shrink wrap adopted in United States	30 oz/$1.50–2.00
1973	Lantech develops first U.S. stretch-film wrapping equipment	Mobil develops the first stretch film	
		Introduction of Mobilrap "C" (LDPE) 30–50% stretch	18 oz/$1.10
1974		PVC stretch films introduced	
1976		EVA stretch films introduced	
1978		First LLPDE film introduced with much higher stretch levels	10–12 oz/50–80¢
1980	Prestretch introduced	Hand-wrap market begins to grow	
	Powered prestretch equipment introduced 150–250%	Stretch film cling at high stretch a challenge	
1981		Convenience hand wraps introduced	8 oz/50¢
	Machinery and film advances allow prestretch up to 300%	Cling consistency improves with better control by film manufacturing	
1983		Nonmigratory cling introduced	
		Higher-load–force cast films introduced	4–6 oz/25–40¢
1987			
		Thinner gauge (50, 60) become available	
	Bi-stretch (trademark) introduced	Mobile introduces stretch-film recycling program	4 oz/25¢
1991			
		Postconsumer recycled content (PCM) hand wrap introduced	
1992			

Stretch-Film Advantages

Think about all the areas in your operation where you currently use tape, twine, strapping, and so on, and chances are that stretch film can do a better job. Stretch film surpasses other bundling materials for the following reasons:

VERSATILITY

Stretch film is able to fit the contours of any product. Door and window manufacturers have switched over in increasing numbers to stretch film. Stretch film, because of its stretchability, has largely replaced the custom-size boxes that were once needed to package the different-size doors and windows being produced.

Stretch-film clarity makes products easier to identify. Labels and lot and UPC codes can be read as well as scanned because of the transparency of stretch film. Food wholesalers and distributors have taken advantage of this feature in implementing and expediting their cross-docking practices.

PROTECTION

Stretch film provides better holding force than do other bundling and packaging materials. Because stretch film spreads across the entire surface area of a load, its holding force is dispersed, not concentrated at only a few points like strapping. This attribute enables stretch film to maintain exceptional load integrity. The furniture industry has come to recognize the ability of stretch film to hold even the most unstable of loads together, which is why an increasing number of component manufacturers have turned to stretch film to bundle loose furniture parts, such as table and chair legs and stair banisters.

Because stretch film clings only to itself, it does not leave any sticky or messy residue on product surfaces. This feature has made stretch film a favorite of the furniture industry. With stretch film, there are no glues or adhesives that can damage fragile finished wood. As a result, furniture manufacturers use stretch film for a wide variety of tasks, some of which are to keep furniture drawers shut so that they do not open in transit, attaching accessories to furniture pieces and to wrapping-desk and table tops.

Unlike other bundling and packaging materials, stretch film protects the products it wraps from dirt, moisture, and abrasion. Carpet and textile manufacturers depend on the protective attributes of stretch film to safeguard their rolls of carpet and fabric.

PRODUCTIVITY

Stretch film increases productivity. Thanks to automated stretch-film machines, newspaper companies have been able to bind stacks of newspapers together more time-efficiently and cost-effectively by reducing much of the manual handling involved.

Cost Benefits

Stretch film costs less than most conventional bundling and packaging materials. But the savings you earn with stretch film goes way beyond just a lower unit cost. Stretch film also saves you money in the following ways.

Stretch film offers more yield than do other bundling materials. Because stretch film has the ability to stretch, you get more product per square inch than with any other bundling material.

Stretch film can eliminate or reduce the need for secondary packaging materials. One example of a stretch packaging cost savings is that of a national T-shirt manufacturer who used to package its T-shirts for shipment in expensive corrugated boxes. However, once it was seen that stretch film could do the same job at a fraction of the cost, the company switched to stretch film. Today, the company is saving $5000 a day in packaging and shipping costs.

Stretch film eliminates or reduces the need for tertiary packaging. Because of superior load-holding force of stretch film, money once spent on tertiary materials such as strapping, twine, and kraft paper can now be saved and better spent.

Stretch film saves on shipping costs. Since products bundled in stretch film are usually more compact—this reduction in size is achieved by eliminating the need for extrabulky packaging materials like boxes—they take up less space in freight trucks. More space in the back of a truck means additional space for more of your products—and that saves you money!

SELECTING THE RIGHT FILM FOR THE RIGHT JOB

There is a wide array of stretch films available on the market, each designed to meet different needs. Choosing the right stretch film(s) for your operation can be a bit confusing. In this section, the variables to choosing the proper stretch film for your particular needs are explained. Finally, this section discusses the characteristics of the different types of stretch film and explain how they are made. All these issues are covered under the following headings:

- Proper film selection
- How stretch film is made
  - Extrusion
  - Coextrusion
  - Cast fabrication process
  - Blown fabrication process
- Process influence on stretch-film properties
- Opaque and color tint films

Proper Film Selection

Whenever selecting film, the following variables should be taken into account.

Type of Product. Stretch-film type is dependent on what you are wrapping. Lighter, more fragile goods require a lower-gauge film to avoid being crushed whereas heavier, more solid goods can withstand the pressure of higher gauges.

Type of Load. There are two factors that determine load type: weight of the load and uniformity of its outside surface. In stretch film, load types are distinguished by the first three letters of the alphabet. A loads have no irregularities, B loads have protrusions of ≤3 in., and C loads have protrusions of >3 in.

Type of Equipment. Machine stretch levels will help determine what type of film is necessary to wrap a load. Whereas higher gauges were once required for machines with high prestretch levels, Mobil is now manufacturing thinner, tougher films that are able to endure greater levels of stretch while maintaining their strength.

Film Thickness. Commonly available gauges for stretch film range from 0.5 to 3.0 mil. Load type, weight, and height are important determinants in selecting film thickness. As prestretch increases, it is extremely important that the stretch film not lose its strength.

Light gauges are excellent dust covers for already secure and strapped loads. Heavy gauges or new-technology metallocene-based films are excellent for loads that require a high degree of containment.

Film Width. Most stretch films range from 2 to 70 in., but can be made up to 100 in. by request. Rotary spiral equipment usually uses 20-in.-width film, but can also use 25- and 30-in. film. Full-web equipment uses a wide variety of widths depending on load height.

To determine which film widths are best for your individual applications, contact a packaging sales professional for assistance.

How Stretch Film Is Made

Understanding how stretch film is made, and the resulting properties that each type of film possesses, can help you when it comes time to purchase the proper film for your operation. The following industry terms, accompanied by diagrams, describe the various manufacturing processes of stretch film and the types of film that are produced as a result:

Extrusion. This is the first step in the production of stretch film in which plastic (polyethylene) resin pellets are converted into melted plastic. For this melting to occur, the resin pellets are loaded into the hopper funnel of the extruder and dropped by gravity into the barrel where the mixture is heated to its melting point. This liquefied plastic is then pushed forward by a continuously turning screw. In the final phase of extrusion, the molten material (or extrudate) is pushed through an opening called a *die*, which shapes the plastic for film formation. (See Figure 1.)

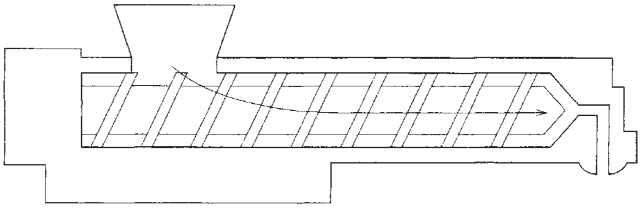

Figure 1. Extruder.

Coextrusion. Coextrusion is a form of extrusion using multiple extrudates and dies to create stretch film with multiple layers. Coextrusion involves the simultaneous extrusion of two or more layers of plastic that are brought together while still melted and then cooled to form a multilayer film. The layers of this film may or may not be different materials and may or may not exhibit different properties. (See Figure 2.)

Cast-Film Fabrication. After the extrusion process melts the plastic, this plastic is pushed through a slit-shaped die. The plastic is then formed into a sheet as it falls into a roller and is pulled vertically downward, orienting the polymer in that direction. This sheet is cooled by passing it through chill rolls, which are kept cool by circulating water inside them. Finally, the sheet is cut into the proper combination of widths and wound into finished stretch film rolls. (See Figure 3.)

Blown Fabrication Process. In the blown fabrication process, the extrudate is pushed through a round-shaped die. This action forms a continuous hollow tube from the extrudate, which is blown vertically upward. During this phase, the film is pulled or oriented in both the pulling (machine) and sideways (transverse) direction. High above the die, the tube is cooled and squeezed shut by a collapsing framework and a set of nip rolls. The flattened tube is then slit and wound into rolls. (See Figure 4.)

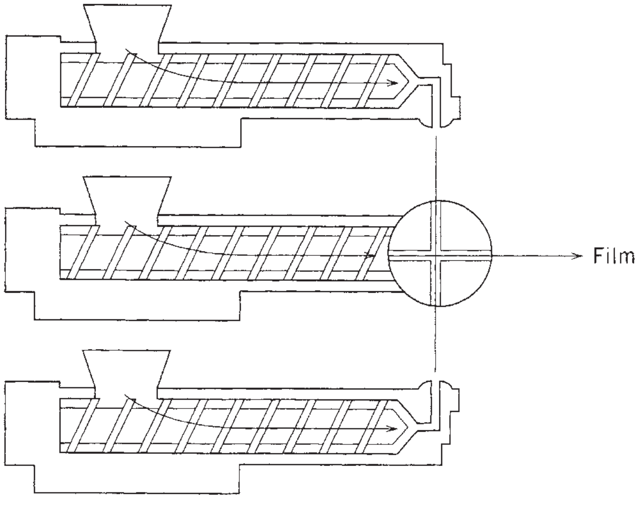

Figure 2. Coextrusion.

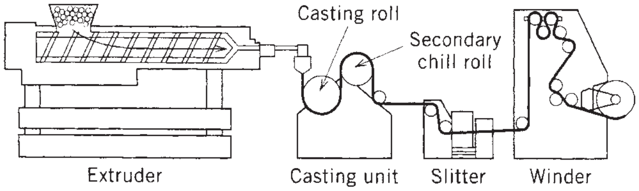

Figure 3. Cast-film fabrication.

Process Influence on Stretch-Film Properties

Cast films are typically different from blown film because of the difference in the way the plastic is oriented and cooled.

In the cast process, film is cooled more rapidly than in the blown process. This faster cooling, which is induced by the chill rollers, causes single-direction orientation in the film. In other words, the polyethylene molecules are cooled so quickly that the molecular structure is formed longitudinally in long, bidirectional branches.

By contrast, blown film is cooled slowly by air while the tube of plastic is drawn upward. This slower cooling allows for the polyethylene molecules to become oriented in all directions, producing a film with tougher puncture resistance.

The differences in these two manufacturing processes produce the following differences in cast and blown stretch films:

Cast Film	Blown Film
Clear	Hazy
High gloss	Dull
Lower modulus—stretches easily	Tough
Quiet unwind	Noisy unwind
	Stiffer film—high load containment
Tear resistance (cross direction)	
Extensibility	
Nonmigratory cling	Migratory cling
Good-to-excellent gauge control	Poorer gauge control
Good puncture resistance	Excellent puncture resistance
Gauge band potential	Gauge spread across roll (rotating die)

Although these are textbook examples of the differences between cast and blown films, it is important to note that through use of various polymers, additives, or process alterations, these differences can be reduced and even reversed. This ability to manipulate the manufacturing process has enabled the stretch-film manufacturer to produce films that combine the best properties of blown and cast films into one film.

Opaque and Color-Tint Films

Opaque and color-tint films are available from film suppliers as special production runs. Because these requests are customized, opaque, and color-tint films have longer lead times and higher costs than do standard stretch films and must meet sizable minimum-order requirements (see Colorants).

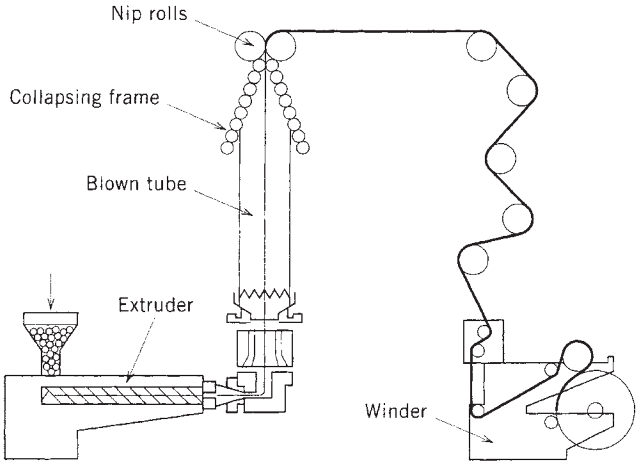

Figure 4. Film-blowing equipment.

MEASURING STRETCH-FILM PERFORMANCE

To most people, if a unitized load maintains its integrity as it moves from point A to point B, it has performed well. However, numerous tests can be completed to thoroughly analyze and measure film performance. Many of these tests can be conducted and evaluated only in a laboratory, but there are a few that any operator can complete with some very simple tools.

This section answers the following stretch-film performance questions:

- What properties are important?
- How can the properties be measured?
  - In the factory or warehouse
  - In the laboratory
- What effect does my machine have on film performance?

What Properties Are Important?

Because there are hundreds of different stretch films now available, knowing how to evaluate film is an important key to success. Equally important is how to use this information to determine load-wrapping cost.

The following is a list of the top six attributes most commonly evaluated:

1. *Tensile Property*. How much even force can be used before the film breaks?
2. *Puncturing*. How much pointed force can the film take before puncturing?
3. *Tearing*. How much force, after a cut has been made, can the film take before tearing?
4. *Optical Scanning*. How much can be seen and read through the film?
5. *Cling on Slip*. How much does the film stick to itself or other surfaces?

6. *Load Force*. How much actual force does the film place on the load?

It is important to note that all of these film attributes are related. Depending on the specific film application, the importance of each attribute will vary. Also, be aware that each film has a balance of attributes and that producing a film that meets maximum performance levels with each attribute would yield an overall weaker film because you cannot affect just one attribute without affecting all of them.

HOW CAN THE PROPERTIES BE MEASURED?

In the Factory or Warehouse

A knowledgeable stretch-film sales professional will employ effective methods to measure film performance on-site. One such method tests the actual stretch level of film after being placed around a load. Using a stretch wheel and a tape measure, the percentage of stretch your machine delivers is calculated in order to ensure that you are not overstretching or underutilizing your stretch film.

Force-to-load is another test that should be performed. The point of this exercise is to measure the pressure the stretch film places against a load. By applying a force-to-load gauge to the stretch film, the apparatus reveals whether the film is administering the appropriate amount of force to contain a load of goods. Snapback is yet another demonstration test used to measure film performance. In the snapback test, you ascertain film recovery; that is, how much has the stretch film returned to its original shape after its been stretched? Film with poor recovery has been stretched beyond its limits and will cause the load to lose integrity over time.

Finally, the “cut and weigh” is a test used to demonstrate the actual cost savings of a particular film in comparison to other brands. In the cut and weigh, a load wrapped in stretch film is cut, removed entirely from the load, and measured on a scale. The same load is then wrapped in another manufacturer’s brand of stretch film and is also cut, removed, and weighed. The two weights are then compared.

To see these film performance measurements done firsthand, contact your local packaging sales professional.

In The Laboratory

The following properties are routinely tested in the lab:

- *Tensile properties* are determined by measuring film performance as it is elongated at a constant rate. By measuring the force required to elongate the film, the following properties can be determined: *yield strength*—the point where a film permanently deforms as a result of force applied during elongation; *ultimate tensile strength*—the maximum force a film can withstand in a tension test measured in psi (pounds per square inch); and *elongation*—the percent increase in film length at its break point.

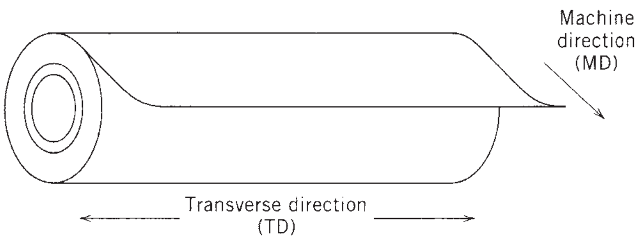

Figure 5. Full-dimensional orientation.

- *Puncture and tear properties* are easy to visually identify while the film is stretched around a pallet load. A film that has poor tear and puncture characteristics will usually fail, forcing an operator to compensate by increasing the number of pallet wraps or loosen the tension. This is an expensive way to compensate for having the wrong film or a film with poor quality. In the lab, puncture resistance is measured by the force needed to puncture the film. This is accomplished by pushing a pear-shaped probe through a tightly secured piece of film. It is measured in inch-pounds or in pounds per mil if film-gauge correction is required. Tear tests or an “Elmendorf test” is simply the force required to propagate a precut slit in a film sample. Another common name for film tearing is “zippering.” The Elmendorf test is measured in grams or grams per mil if gauge correction is required. Tears can occur in both vertical (machine) and horizontal (transverse) directions. (See Figure 5 for clarification.)
- *Optical properties* describe the film’s ability to transmit light (haze) or reflect light (gloss). Both of these properties are significant in determining film clarity.
- *Haze* is a quantitative measure of film transparency, which is very important for scanning labels and identifying pallet-load contents.
- *Gloss* is a measure of surface finish and the films ability to reflect light shine. The higher the percent gloss, the better the shine. Cast-manufactured films tend to exhibit better clarity than do blown films and have higher gloss.
- *Load-force properties* describe the amount of force a film can provide after it is stretched wrapped to a pallet of goods. As mentioned earlier, this test is done in the field as well as in the lab. The load-force property is very important because it is a key to keeping pallets loads tightly unitized. The best way to measure load force is to use a force-to-load gauge. This gauge will show the actual force (pressure) being placed on the load by the film.
- *Cling and slip properties* are measured with an Instron apparatus. Both cling and slip is measured in grams. Cling is simply the ability of a film to stick to itself or another smooth surface. Cling is affected by the amount of tackifier additives, such as polyisobutylene (PIB) in blown films, which are added or by the smooth outer surface of cast films. To

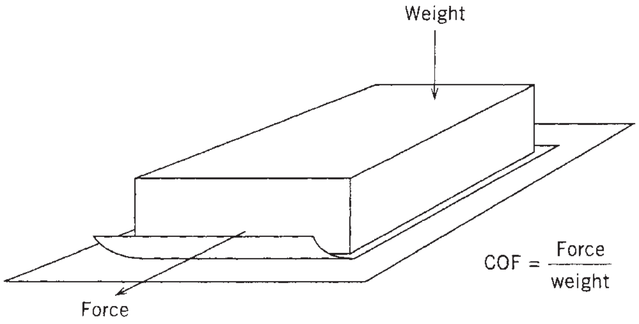

Figure 6. Measurement of coefficient of motion.

determine slip, a film is measured for its *coefficient of friction* (COF), which is a measure of the amount of force required to move a film sample with no cling out from underneath a standard unit of weight. (See Figure 6.)

What Effect Does My Machine Have on Film Performance?

Film performance is critical when determining which film can offer the best load protection at the lowest cost. Often, the equipment used to apply film has a dramatic impact on the film. A film that performs well on one machine may not offer the same results on another system; for instance, stretch levels may differ by machine. Even equipment operators can affect film performance by mishandling the product, not keeping equipment clean and running efficiently, or not stretching the film to its maximum potential.

The challenge is to look beyond a "no complaints" or "it's not broken, don't fix it' mentality to evaluate true film perfomance. In other words, how can a user methodically evaluate film performance levels to discover the best film for the operation under consideration? By employing the film performance measurements outlined in this section, you can make sure that your stretch film is performing up to its full potential.

INSPECTING AND HANDLING STRETCH FILM

Because stretch film exhibits toughness when wrapped, most people would think that stretch film rolls are not fragile. But they are. Caution must be exercised when handling stretch-film rolls and loading them onto the wrapping machine to avoid edge damage, which will cause tearing during prestretch. This section will teach you proper roll-handling techniques and enable you to spot roll defects by covering the following topics:

- Stretch film handling and storage
- Manufacturing defects

Stretch-Film Handling and Storage

Stretch-film rolls, especially their edges, are sensitive to damage. Bumps, nicks, and cuts on the outer edges will easily render the roll unusable. As a result, the rolls must be handled with care. The following are some recommended tips on handling stretch film rolls:

- *Step 1—Minimize Roll Handling.* The packaging that holds a stretch film pallet together has been designed to be opened as close as possible to the wrapping machine. For exactly that reason, it is recommended that pallets of stretch film be stored as close as possible to the wrapping machine to minimize roll handling and prevent damage that could be caused by dropping the rolls.
- *Step 2—Inspect Rolls.* After opening your pallet of stretch film, the rolls should be inspected for shipping damage that can occur if they have shifted in transit. This damage can take the form of dents, product rubs, and gouges, nicks, and tears. Should these exist, try to remove them by unraveling the first few layers of the roll before loading it onto the machine.
- *Step 3—Keep Film Away from Surfaces.* Stretch-film rolls are designed with a 1/4-in core protrusion on each end. When either placing stretch film on the floor for storage purposes or on a machine roll carriage, always make sure that the core, and not the film, is touching the ground or machine surface. The less the film comes in direct contact with any surface, the less likely that your roll edges will become damaged.
- *Step 4—Keep Film Away from Excessive Heat.* To prevent film damage, keep rolls away from heating vents or machines that give off an inordinate amount of heat.

Manufacturing Defects

Several defects can occur in the manufacture of stretch film. Users of stretch film should be aware of these defects (highlighted in italics in legends to Figures 7–13) which may adversely affect film performance.

The best way to avoid manufacturer defects is to pick a manufacturer who places extremely high emphasis on quality, consistency, and performance.

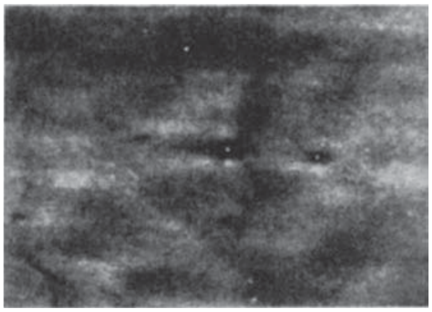

Figure 7. *Gels*—round, hard, clear spots that are high molecular weight or unmelted polymer. Caused by abnormalities in resin or poor mixing. Large gels can cause holes to occur during the wrapping process, which may result in film breaks.

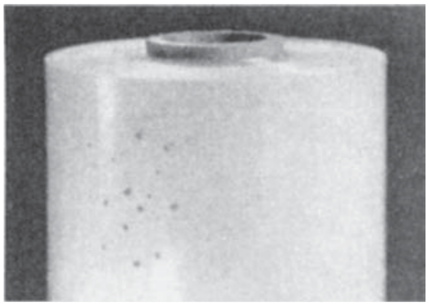

Figure 8. *Black specks*—degraded polymer or other film imperfections caused by a foreign material. Not a common problem. Gives appearance of poor film quality.

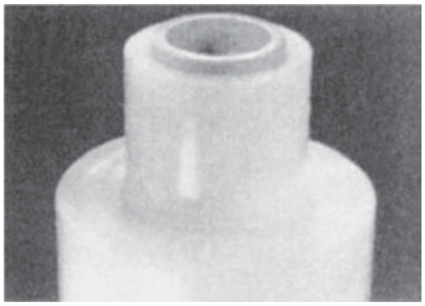

Figure 9. *Roll telescoping*—the sliding of inner layers of the film in a roll or the core out of a roll, increasing roll width and making the roll unusable. This is typically caused by tackifier levels and winding conditions.

Maintaining Consistent Stretch Levels

To measure the degree of stretch your film achieves, you need only three tools: a stretch wheel, a tape measure, and knowledge of a simple mathematical formula.

A stretch wheel is 10 in. in circumference, rotates on an axis, and is held in place by a handle. Jutting out from this wheel is an ink mark that makes a black mark every 10 in. on a roll of unstretched stretch film when the wheel is allowed to rotate freely against the film.

To measure exactly how much a sheet of film has stretched, roll your wheel horizontally against the outer layer of film while it is on the spindle of the machine. Make sure that at least four black marks have been made. Initiate the wrap cycle so that the film is stretched. Measure the distance between the marks. (*Note:* Make sure that you measure the marks that do not cross corners, but are on the flat side of the pallet.)

Now, using your mathematical formula, subtract 10 in. from your measured distance and multiply that difference

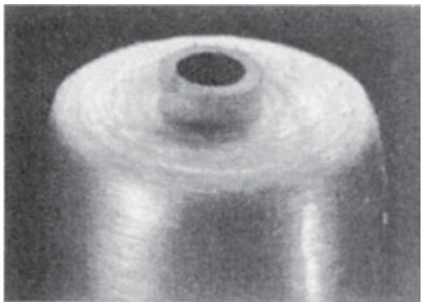

Figure 10. *Feathered edges*—extension of a layer or layers of film past the end of a film roll. Caused if the film wanders back and forth during winding. If these loose edges fold over, they may cause spiral tears during film unwinding.

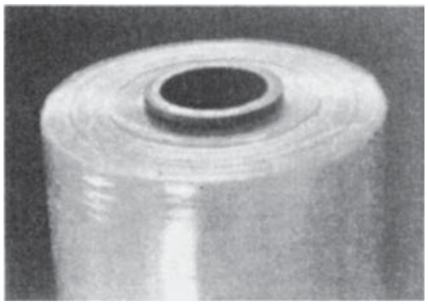

Figure 11. *Scalloped edges*—sawtooth-appearing film edges caused by poor slitting. Can cause web failure from edges.

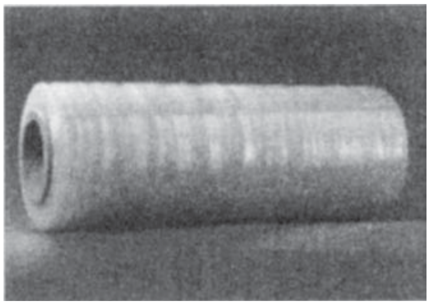

Figure 12. *Gauge bands*—hard or soft rings on a roll of film, caused by gauge (thickness) variations in the film. Normally, gauge bands do not result in any wrapper failure. If a failure does occur, it will come from a wrinkle in the band area. It will appear as a slit starting between the prestretch rolls.

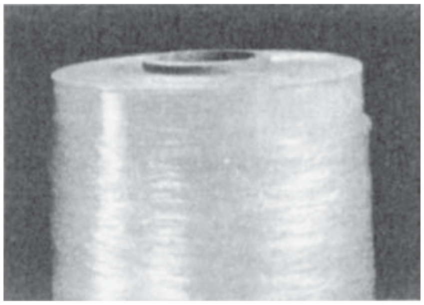

Figure 13. *Tails–overwind*—material that is disrupted by the automatic index or transfer of the winder. During the transfer from a full roll to any empty core, the web tends to draw in and wrinkle. This allows additional air to be trapped and results in a disrupted film appearance.

by 10. The answer is the percentage of stretch that film has endured.

Example: After a sheet of film has been stretched, the distance between the two black wheel marks reads 27 in. Subtract 10 from this number (27−10 = 17), and then multiply 17 by 10 (17 × 10 = 170). (*Answer:* The film was stretched 170%.)

FILM PROBLEMS

There are some problems that can occur when using stretch film. As seen in the preceding section ("Inspecting and Handling Stretch Film"), some of these problems are manufacturer-related and some are shipping related. Stretch-film problems can also stem from equipment conditions, wrapping speeds, and operator ignorance. However, as long as you know how to identify these problems, most have correctives.

This section focuses on how to spot common stretch-film problems and what you can do to rectify them when they arise. Stretch film failures and solutions will be covered under

- Film breaks
- Film "tails"
- Tackifier buildup

Film Breaks

There are three common film breaks that can be identified by the way the stretch film tears. These breaks and the solutions required to repair them are described in the following list.

Edge. An edge tear starts at the top or bottom of a roll and tears in a diagonal direction. It is usually caused by a nick in the film edge. To fix the problem, simply unwind the film until the imperfection is gone. (See Figure 14.)

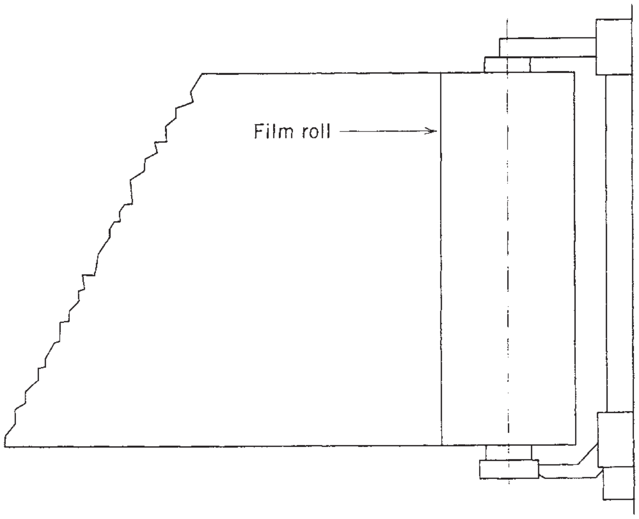

Figure 14. Film break at edge.

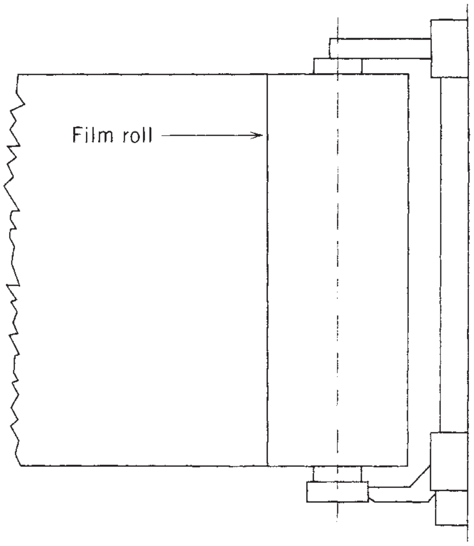

Figure 15. Ultimate break.

Ultimate Break. An ultimate break is a straight-line break with pointed edges. The break occurs when the film has been prestretched beyond its limits. To avoid this type of break, reduce the percentage of prestretch on your machine. (See Figure 15.)

Gel. A gel is a V-shaped break in the film caused by resin imperfection or some other manufacturing problem. Before replacing this roll of film, first try to correct the problem by lowering the F2 and/or prestretch percentage on your machine. (See Figure 16.)

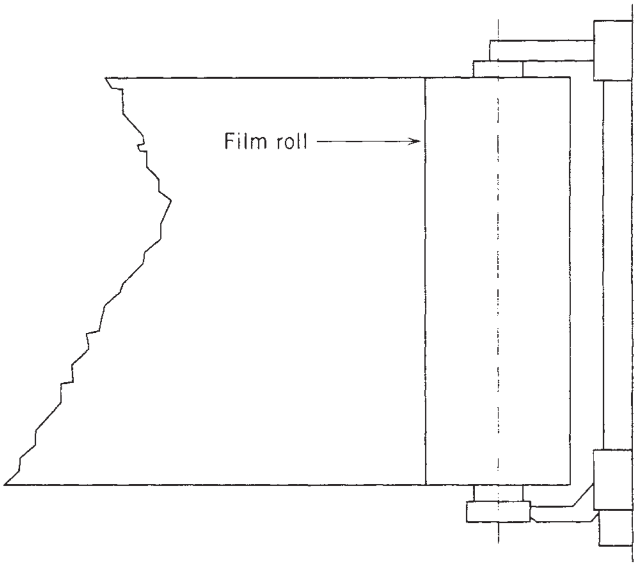

Figure 16. Gel or V-shaped break.

Film "Tails"

A stretch-film "tail" is a loose end piece of stretch film that hangs off a wrapped pallet.

Tails loosen or fall down on wrapped pallets if cling is too low or there is too much dust on the film. But tails occur primarily because film is cut off under tension. To avoid creating tails, the final wrap should be made with a reduced stretch percentage and lowered F2 so that the film elasticity does not pull the tail free of the load.

Tackifier Buildup

Tackifier, the most common of which is PIB, is an additive responsible for giving blown stretch film its cling. Over time, tackifying agents will build up on machine rollers. If allowed to accumulate, tackifier residue can cause stretch film to stick to the rollers and to itself.

To avoid this scenario, machine rollers should be cleaned on a regular basis. It is advised that a mild detergent (isopropyl alcohol makes a good cleaner), warm water, and a nonabrasive cloth be used for this purpose because of the sensitivity of the machine rollers.

ENVIRONMENTAL EFFECTS ON FILM

The strength and protection stretch film affords the packages it wraps has made it the unitizing material of choice among thousands of businesses worldwide. But this is not to say that stretch film is without its limitations. There are certain environmental and physical conditions that can impair regular stretch film's performance. This section reveals what these conditions are so that you can avoid them and get the most out of your stretch film. The topics discussed are

- Outside storage
- Static discharge
- The effect of temperature on film
- The effect of dust and grit on film
- Stacking pallets

Outside Storage

Regular stretch film is not designed for prolonged outside storage. Stretch film is subject to photodegradation from the ultraviolet rays in normal sunlight, which substantially weakens the film.

If wrapped pallets are to be stored outside for more than several weeks, they should be covered. Otherwise, for prolonged outdoor applications, specially formulated ultraviolet-irradiation (UVI)-stabilized films should be used. With UVI film, UV protection is optimized when used in conjunction with opaque tinting.

Static Discharge

Stretch films will support a static discharge and, therefore, should not be used in explosion-prone environments. Since stretch film can induce a static charge, electronic devices packaged in stretch film run the risk of suffering damage. Static buildup, however, can be dissipated through use of Christmas garland or static eliminators.

Effect of Temperature on Film

Generally, higher temperatures make film softer and easier to deform. Lower temperatures make film stiffer and harder to stretch and deform. At higher temperatures, where film is softer, machine-direction tensile strength, tensile yield, puncture force, and transverse-direction tear resistance all decrease. Machine-direction ultimate elongation increases.

At lower temperatures, the opposite is true. Machine-direction tensile strength, tensile yield, puncture force, and transverse direction tear all increase. Machine-direction elongation decreases. If temperature plays a role in your stretch-film requirements, contact your packaging sales professional, who can recommend films that are best suited for your particular needs.

Effect of Dust and Grit on Film

Dust has an adverse effect on film, causing it to lose its cling. In high-dust and high-grit environments, debris can build up on the prestretch and metal rollers and cause failures in film performance. As mentioned earlier in this section, the debris that collects on the rollers is often the result of a buildup of tackifying agents. PIB, the most common cling additive, can accumulate over time, causing the film to wrap and/or sharp objects to be embedded in the rubber rollers. Therefore, it is of utmost importance to keep the rollers clean and free of buildup.

Stacking Pallets

Too much pressure may be placed on pallets by stacking them too high. Two is the recommended limit.

GLOSSARY OF TERMS

Antiblock. Substances added into plastic materials that retard or prevent film layers from sticking together.

Blowup ratio. The ratio of "bubble" or "tube" diameter to extrusion die diameter. A primary consideration in determination of transverse-directional (TD) shrinkage and a partial determinant of machine-directional (MD) shrinkage.

Blown film. Film that is fabricated by continuously pumping the polymer through a circular orifice (die). Once through the die, this polymer is then drawn upward and filled with air, creating a tube. The volume of air contained within the tube stretches the tube out to the desired width and, in conjunction with rate at which it is being pulled away from the die, the desired thickness is created.

Caliper. The thickness of a film or bag, normally expressed in mils or as "gauge" (0.9 mil = 90 gauge = 0.0009 in.).

Cast film. Film that is fabricated by continuously pumping the polymer through a straight slot orifice (die), then chilling this hot sheet of plastic immediately afterward by contact with a colled roll. Film width is determined by the length of the slot. Thickness is determined by how fast the casting roll pulls the plastic away from the slot (or die).

Cling. The characteristic of stretch film that makes it stick to itself or other clean objects.

Coefficient of friction. A dimensionless numerical representation of the ease with which two objects or surfaces will slide against each other. Low numbers slide easily. Total range due to the test definition is 0–1.

Coextrusion. Fabrication of a multilayer film by pumping the various materials through separate extruders and then merging the extrudates into a common die assembly. These die assemblies are constructed to maintain distinct material layers with fusion occurring at the boundaries, due to the pressures and temperature of the extrudates.

Copolymer. A plastic or polymeric whose chemical composition consists of more than one basic hydrocarbon type. The materials are chemically bonded and remain in combination, thus influencing the performance by their own distinct characteristics.

Crosslinked PE. A polyethylene that has been specifically treated by chemical or physical means to cause intrachain bonding.

Crystallization. The formation of distinct, ordered, and repeated molecular groups. Polyethylene forms varying amounts of crystalline structure depending on process conditions and original molecular makeup. The remaining portion is amorphous (which is the antonym of crystalline). Ice is crystalline; water is amorphous.

Dart drop. A method of measuring a film?s impact strength or dynamic toughness. A hemispherical shaped, weighted “dart” is dropped onto a film sample. The weight at which 50% of the samples are punctured is considered the WF_{50} reading.

Die. A device used in extrusion processes to shape the extrudate. Circular dies are used for blown products, and slot dies are used for cast products.

Drawdown ratio. Commonly expressed as the ratio of the width of the extrusion die orifice to the thickness of a particular film. Frequently, however, and more correctly, it is a ratio involving die orifice, blowup ratio, and final film thickness as follows: die gap/(film gauge × blowup ratio).

Eldastic recovery. The ability of a material to return to its original shape or size after having been deformed or subjected to strain.

Elmendorf tear. A testing method used to quantify a material?s resistance to tearing forces. Generally, a sample is slit (initiated tear), then the force required to tear apart the sample is measured and given as the tear value.

Elongation at break. The strain or deformation required to break a sample. Generally expressed as a percentage by dividing the strain (distance) at which a sample breaks by the original sample length.

EVA. Abbreviation (acronym) for the copolymer ethylene vinyl acetate. Small percentages (1–18%) of vinyl acetate monomers are frequently polymerized with ethylene to provide greater extensibility or greater low-temperature strength or to improve sealability.

Extrudate. Molten polymer.

Extrusion. The process of feeding, melting, and pumping a material such that a desired shape or configuration can be created. It is a continuous process and utilizes a device similar to a meat grinder.

Film yield. Generally expressed as the square inches of a film (area) that weighs one pound if the film is 1 mil (0.001 in.) thick. Coverage is on a per pound (lb^{-1}) basis. This should not be confused with yield point, yield strength, or tensile yield, which are strength measurements. Polyethylene yields 30,000 $in.^2$/lb at 1 mil.

Gauge. Used as a synonym for film thickness or film caliper. Sometimes expressed as 80- or 100-gauge, which equates to 0.8 or 1 mil, respectively, or 0.008 or 0.001 in., respectively.

Gauge band. A conformation irregularity found in rolls of material. A thick area in a film will produce a raised or elevated ring in a finished roll of product. Conversely, a thin area will result in a soft ring in a finished roll.

Gloss. The shine or sparkle of a surface. In LDPE film, gloss is described as the amount of light reflected from the surface. Standard technique places a light source and a receiver at 45° angles from the surface. The number value produced is roughly the percentage of light reflected from the source into the receiver.

Haze. The lack of film transparency. It can be induced by process considerations, inherently due to molecular configurations or created by pigmentation. It is measured by determination of the percentages of light not transmitted through a film sample.

Homopolymer. a plastic resin or polymer whose entire chemical molecular structure is of a single hydrocarbon group. It is made by feeding a single monomer to the reactor.

Impact strength. The ability of an object or material to resist rapidly applied destructive forces. Refer to “Dart drop.”

LDPE. Low-density polyethylene—any polyethylene homopolymer whose density is between 0.913 and 0.925 g/cm^3 (g/mL).

Modulus. Short for modulus of elasticity, which is a numerical value reflecting a material’s resistance to deformation. A film with a high modulus is hard to stretch or elongate.

Monomer. The incremental or elemental chemical elements before polymerization. Ethylene is a monomer.

Neckdown. The “narrowing” tendency of a film when it is being stretched or pulled. Occurs when film is stretched in the machine direction, resulting in decreased transverse direction width.

Opaque. Film that is impervious to light: 100% haze level.

Polyisobutylene (PIB). Tackifier additive in blown film that gives it cling.

psi. Abbreviation for pounds per square inch ($lb/in.^2$). A unifying statistical measurement by which various thickness of material can be tested, equated, and compared without regard to actual specimen thickness.

Puncture performance. The relative comparison of a material’s resistance to failures caused by penetration—for example, how easily your finger pokes through a film sample.

PVC. Abbreviation for poly(vinyl chloride). In film form, it is used as a meat or produce wrap, as stretch film, and as a high-clarity shrink wrap for consumer or retail packaging.

Polymer. Means "many members." A structure generated by the repetitious joining of many of the same elementary units. Natural polymers are cotton, wood, or protein. Synthetic polymers are polyethylene, polystyrene, nylon, and so on.

Polyolefin. Polymers of basic unsaturated hydrocarbon chains containing at least one double bond (e.g., polyethylene, polypropylene, and polybutene). Not PVC or PVA.

Reactor. The equipment used to transform ethylene gas to polyethylene.

Stress relaxation. Primarily it is the phenomenon of force decay as a function of time. It means that the "rubber band" tying a stretch load together exerts less force as time passes. This rate of decrease varies greatly with different polymers. PVC has an early decay that is much greater and more rapid than that of LDPE.

Stretchability. A combination of factors related to the ability of a material to be stretched or elongated—for example, how easily and to what extent a film stretches and whether it will return to its original length.

Tack. An adjective used to describe a film's resistance to slide against itself or another surface, or its resistance to separation from itself. Similar terms are *surface adhesion* or *cohesion, surface seal, wetting of film layers, blocking*, or *cling*.

Tackifiers. Chemical substances added to increase the tack of the parent or base material.

Tear resistance. The resistance of a film to be torn. This is quantified by Elmendorf tear testing, and is measured as the force required to propagate an initated tear in the MD or TD direction.

Tensile ultimate. This is a stress level, measured in psi, beyond which the specimen will break. It is the laboratory-measured, maximum stress (applied force) that the material will withstand. Tensile indicates that test is conducted with a pulling or tensioning type of loading.

Tensile yield. This is a stress level, measured in psi, beyond which permanent deformation occurs. "Tensile" indicates that the specimen is pulled or "tensioned" rather than compressed. Up to this stres or applied force level, a release of the force will result in the specimen returning to its original size. Pulling with a higher force will result in an elongated sample, even after the force is removed.

Tint. A slight coloring that allows light transmission and relatively good clarity.

Toughness. An overall strength measurement that takes into account both the amount of pull and the amount of elongation a sample can withstand. A tough material will resist breakage by both resisting force and by elongating. A brittle material (e.g., glass) will resist force, but will break instead of deforming; hence it has low toughness. LDPE, which is plastic or tough, both resists and elongates—hence is tougher than glass. The rate of force application has significant effects on toughness, so comparisons must include testing data.

Ultimate Strength. Same as "Tensile ultimate."

Wide web. Wrapping with a roll of film approximately the size of the load.

Wrap. One revolution of a machine turntable.

Yield stretch. Same as "Tensile yield."

Zippering. Lack of resistance to tear propagation of an initiated TD cut or tear. Once the film has been torn or cut, the resulting slit rapidly opens and completes a full-web break.

FILM, TRANSPARENT GLASS ON PLASTIC FOOD-PACKAGING MATERIALS

RUSSELL J. HILL
BOC Coating Technology,
Concord, California

INTRODUCTION

Commonly used polymeric packaging materials, such as polyethylene terephthalate (PET), oriented polypropylene (OPP), and biaxially oriented nylon (BON), do not have sufficient oxygen or water-vapor barrier properties for many packaging applications. To resolve this issue, multilayer material structures that incorporate aluminum foil and polymeric films, aluminum metallized films, PVDC-coated films, or coextruded EVOH films routinely are applied. However, environmental considerations and the push toward source reduction have created a market need for a thin-film transparent oxygen or water-vapor barrier coating that is friendly to the environment and convertible into usable packaging materials and at the same time capable of meeting the cost requirements of the food-packaging industry. The coating should also use a low-temperature process to coat heat-sensitive polymeric films such as OPP and BON.

The goal of the scaleup process for the QLF transparent barrier coating was to design and manufacture equipment to provide SiO_x-coated material that is environmentally friendly, recyclable, microwavable, crystal-clear in transparency, excellent in adhesion to the substrate, and able to allow metal detection. In addition, the coating must withstand mechanical stress and the high temperatures generated during extrusion lamination and heat seal. It should be printable, able to run at a high speed on standard converting equipment, and be cost-competitive compared with existing barrier materials. For commercial success, the coating process must be capable of producing high throughputs to meet the low coating cost demands of the packaging industry.

WHY PLASMA-ENHANCED CHEMICAL VAPOR DEPOSITION (PECVD)?

Coatings of SiO_x can be produced by several methods that include sputtering, evaporation, and PECVD.

Table 1. Comparison of Glass-Coating Technologies

Feature	Sputtering	Evaporation	PECVD
Vacuum (torr)	10^{-3} (proc.) 10^{-6} (base)	10^{-6} 10^{-6}	10^{-2} 10^{-2}
Power (kw)	Thousands	Hundreds	Tens
Process temperature	High	High	Low
Source	$Si + O_2$	SiO/SiO_2	Monomer
Source cost	High	High/medium	Low
Source utilization	Roughly 40%	Roughly 25%	>50%
Coating thickness	400–500 Å	1500–3000 Å	150–300 Å
Film color	Yellow	Yellow	Clear
Coating bond	Mechanical	Mechanical	Chemical
Barrier (unlaminated)	Medium	Medium	High

Extensive R&D programs have been completed to investigate each technology to determine the most effective method for creating a SiO_x coating to meet scaleup process goals. At the same time, a prototype machine was built capable of coating rolls 660 mm wide to prove the production and economic viability of whichever process was chosen. This system had the capability to use all three technologies. Table 1 shows the results of the study that led to the focus on the PECVD process. Sputtering was disqualified early, because of large power requirements and low deposition rate. The process was not economical for food packaging.

In contrast, the main advantage of evaporation was the *potential* to run at very high line speeds, comparable with those speeds used in vacuum metallizing of aluminum. This potential has not been realized. SiO cannot be evaporated at as high a rate as aluminum. If it is evaporated at a power level to give the same rate as aluminum, then molten SiO is spattered onto the film, which causes holes in the film. Also, the thickness of the coating needed to gain a suitable barrier is much greater than that for aluminum metallizing (1500–3000 Å vs. 200 Å).

On the basis of the coating work carried out, the PECVD process showed much more promise than evaporation in terms of economics and coating performance. The economics for the PECVD process are better than those for evaporation, because the vacuum requirements are less stringent, which means that the time to change rolls should be less; the power requirement per unit area is less; cooling requirements are less; raw material is inexpensive and available; source usage is higher, mainly because of patented equipment design; and coating thickness is less.

SCALEUP OF MANUFACTURING SYSTEMS

The SiOx deposition process described is a low-pressure, low-frequency, and low-temperature PECVD process that uses a mixture of helium, oxygen, and the organosilicon compound hexamethyldisiloxane (HMDSO), as shown in Figure 1. The plasma source uses a multipole magnetic field to confine the plasma to obtain enhanced deposition rates at low pressures. The resulting silicon oxide is the QLF barrier coating.

The three coaters used in the course of the maufacturing scaleup effort are shown schematically in Figure 2. The QLF coating was initially developed in a small research roll coater. Because of technical risks and the capital cost required to build a 1.5- or 2-m-wide vacuum roll coater, the strategy involved incremental steps in scaling up the coating process from a web width and speed of 0.3 m wide at 0.3 m/min, to 0.66 m wide at 100 m/min, then 1.5 m at >100 m/min and finally to 2 m at >100 m/min. The challenge to incrementally increase the web width and speed was recognized because of the need to develop hardware capable of running under the process conditions required to achieve the target barrier performances and line speeds. BOC coating technology (BOCCT) has systematically scaled up the process using statistically designed experiments that optimized the parameters through different treatment conditions as well as the use

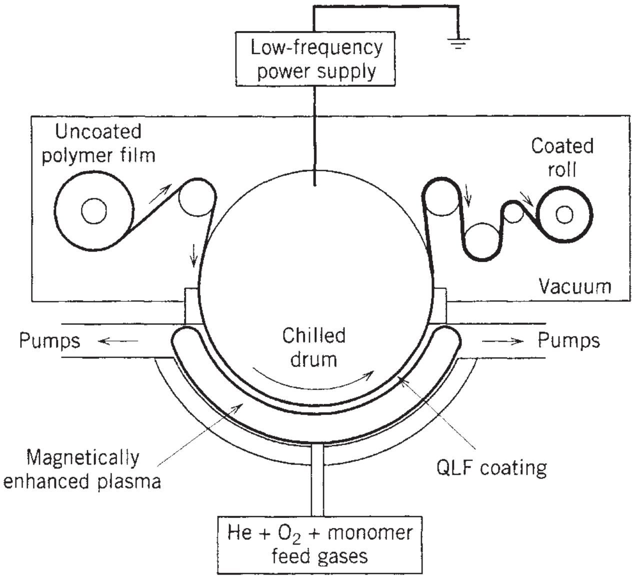

Figure 1. Proprietary plasma-enhanced chemical vapor deposition.

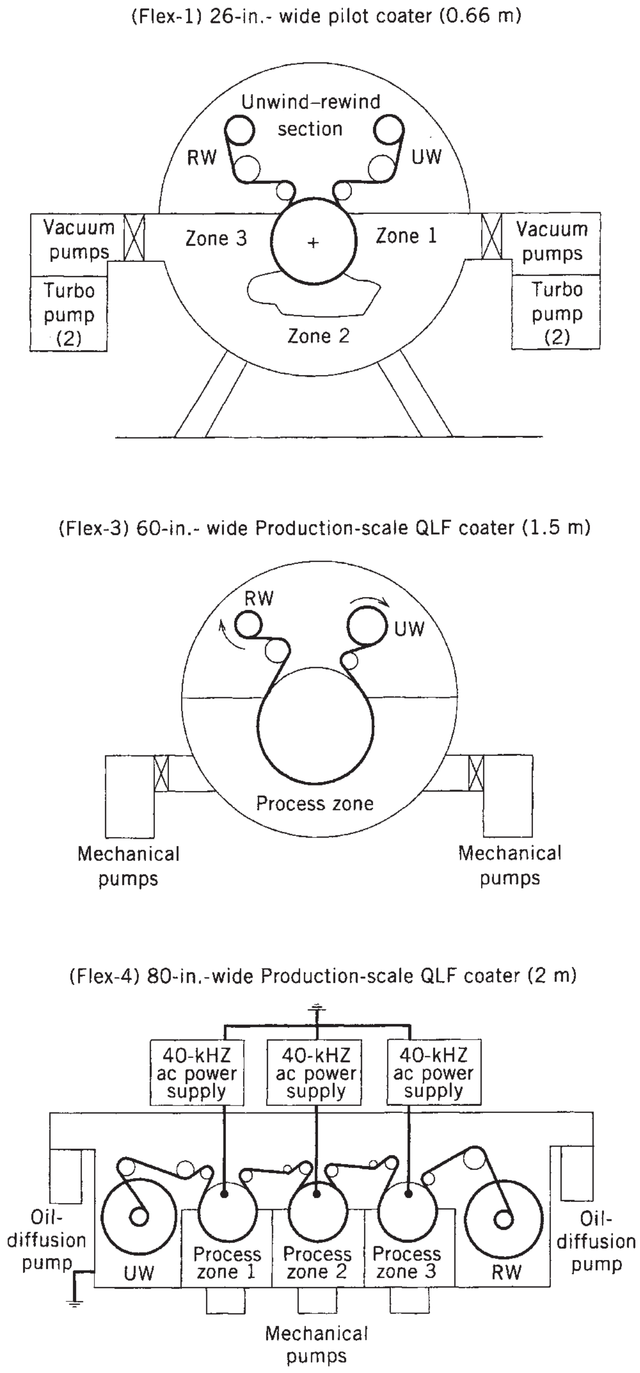
(Flex-1) 26-in.- wide pilot coater (0.66 m)

(Flex-3) 60-in.- wide Production-scale QLF coater (1.5 m)

(Flex-4) 80-in.-wide Production-scale QLF coater (2 m)

Figure 2. Flex-1, Flex-3, and Flex-4 schematic.

of previous experience from other vacuum coating machines.

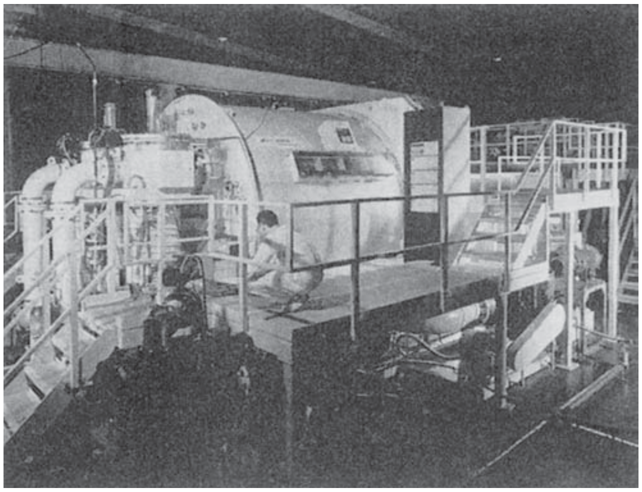

Figure 3. Flex-3: production-scale QLF roll coater.

The first scaleup phase was completed in a development coater that can mechanically handle 0.66-m-wide webs at speeds from 0.1 to 150 m/min. The second scaleup phase was conducted in a production-scale coater that can handle 1.5-m-wide webs at speeds from 10 to 300 m/min (Figure 3). The process scaleup in this coater was completed using HMDSO as the monomer. The third scaleup phase is a production coater that can handle 2-m-wide webs at speeds from 30 to 300 m/min (Figure 4). This is a modular design production coater with three isolated process zones that provide flexibility for pretreatment and/or posttreatment or for deposition with different chemistries.

BARRIER PERFORMANCE

The *unlaminated* oxygen transmission properties achieved to date for PET and OPA are listed in Figure 5 and 6. A typical oxygen transmission rate (OTR) for uncoated PET is 115 cm^3/(m$^2 \cdot$ 24 h). With QLF coating applied at a speed of 100 m/min, the OTR is reduced to 1.1 cm^3/(m$^2 \cdot$ 24 h). Increasing the line speeds to 200 m/min will result in an OTR reading of 2 cm^3/(m$^2 \cdot$ 24 h). The opportunity for high barrier performance on other substrates is also possible. Production rolls of OPA with QLF coating run at line speeds of 300 m/min demonstrate an OTR of 7 cm^3/(m$^2 \cdot$ 24 h). These results represent the flexibility a roll coater can offer. *Whether a customer is targeting a high or medium*

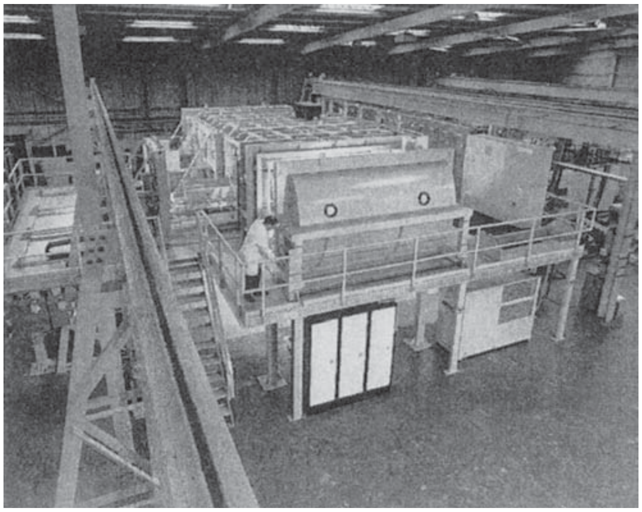

Figure 4. Flex-4: production-scale QLF roll coater.

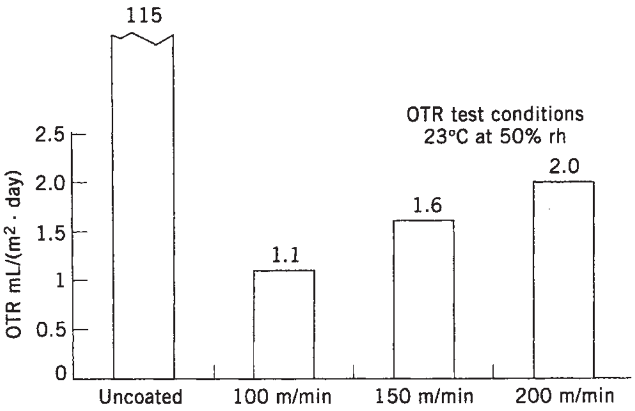

Figure 5. OTR of 12-μm PET with QLF coating.

barrier application, a roll coater can satisfy their requirements.

Initially, the technology was focused on an effort to optimize the oxygen barrier primarily for liquid packaging. Continued development was targeted toward upgrading and optimizing the process for water vapor (WVTR) as well. As indicated in Figure 7, the WVTR for PET with QLF coating has been reduced from a level of 5.6 g/(m^2 · 24 h) in August 1995 to 1.4 g/(m^2 · 24 h) in December 1995. Development efforts are now focused on increasing line speeds and on introducing a range of different substrates to the PECVD process. (See also Barrier Polymers.)

CONVERTING

Successful large-scale acceptability of QLF-coated materials is dependent on the ease of convertibility as well as on their cost and barrier properties. Extensive research has been dedicated to determining how "robust" QLF coatings are in varying converting processes. Because of the strong chemical bond that exists between QLF coatings and PET, converting results have been encouraging. Several packaging converters have successfully adhesive- and extrusion-laminated QLF-coated PET, which maintain barrier properties and achieve excellent bond-strength results. Good ink adhesion also was achieved directly on the QLF-coating surface. BOCCT can supply a recommended list of inks and adhesives on request.

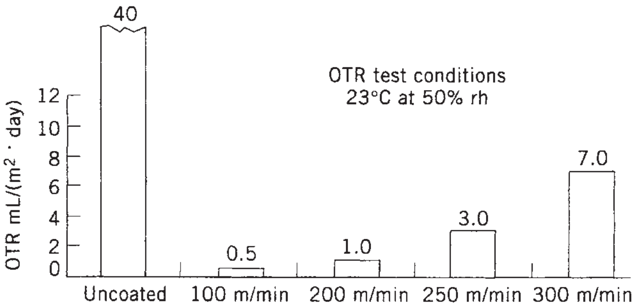

Figure 6. OTR of 15-μm OPA with QLF coating.

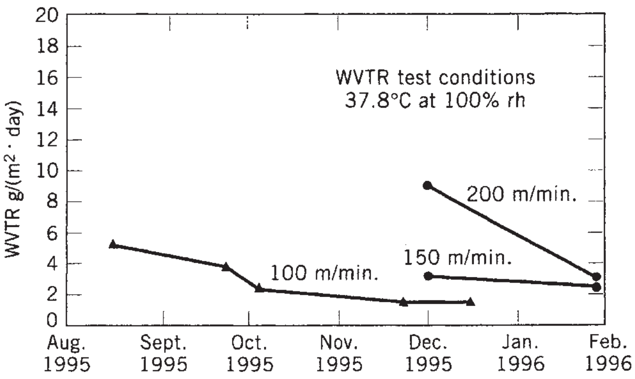

Figure 7. WVTR of 12-μm PET with QLF coating.

Gelbo flexing, which is a test commonly used to simulate stresses encountered in finished-packaged shelf life in the marketplace, is also being investigated. Earlier papers (1,2) already have reported that the finished-packaging structures with the QLF coating survived the tests when properly laminated.

COMMERCIALIZATION OF QLF BARRIER COATING

The transparent oxide barrier market has been plagued by high cost and/or difficulties in converting or printing on the barrier coating surface without losing the barrier properties. One of the most crucial success factors in the transparent high-barrier market is the ability to provide a better, or comparable, material at a lower cost. QLF coatings are not only the most "robust" transparent oxide coatings available in the marketplace—they also provide the most competitive economics.

Today, BOCCT roll coaters are built to offer the converter or film manufacturer the flexibility to target both the medium-barrier and the high-barrier markets. Depending on the barrier level one is looking to achieve, QLF coating costs can range from < \$0.03 to < \$0.045/m^2. These costs will continue to lower as more advances in line speeds and barriers are achieved.

The use of commercial size coaters to improve the QLF coating performance is continuing. QLF coatings are FDA approved, provide a better barrier than polyvinylidene chloride (PVDC) coatings, and are insensitive to humidity changes as opposed to ethylene vinyl alcohol (EVOH). Replacement of these coatings on substrates such as PET and BON are the initial targets for large-scale commercialization of QLF coatings.

CONCLUSION

QLF barrier coatings have been scaled up from a 0.3-m-wide web laboratory coater at a line speed of 0.3 m/min to a 2-m-wide web production coater capable of 300 m/min. BOCCT is committed to continued improvements in both line speeds and barrier performance. Currently, technology-driven converters and film manufacturers are forming partnerships with BOCCT to make QLF coatings a commercial reality.

QLF coatings applied to PET substrates can now perform with barriers and line speeds that exceed even the most demanding expectations of the packaging industry. Meeting the demand in the packaging industry for an environmentally friendly, transparent barrier coating is the goal of BOCCT.

BIBLIOGRAPHY

1. E. Finson and J. Felts, "Transparent SiO_2 Barrier Coatings: Conversion and Production Status," *TAPPI J.* **78**, (1995).
2. E. Finson, and R. J. Hill, "Glass-Coated Packaging Films Ready for Commercialization," *Packag. Technol. Eng.*, **36** (1995).

FLEXIBLE INTERMEDIATE BULK CONTAINERS

Bruce Cuthbertson
Flexible Intermediate Bulk
Container Association
Updated by Staff

INTRODUCTION

Flexible intermediate bulk containers are defined as an intermediate bulk container, having a body made of flexible fabric, which (1) cannot be handled manually when filled, (2) is intended for the shipment of solid material in powder, flake, or granular form, (3) does not require further packaging, and (4) is designed to be lifted from the top by means of integral, permanently attached devices (lift loops or straps) (1).

Flexible intermediate bulk containers (FIBCs), also known as "big bags," "bulk bags," and "bulk sacks," were first manufactured in the late 1950s or early 1960s. There is some controversy as to where the first FIBCs were made; however, it is known that FIBCs were made in the United States, Europe, and Japan during the time period mentioned above. The first FIBCs were constructed with heavy-duty PVC-coated nylon or polyester where the cut sheets are welded together to form the FIBC. These FIBCs were made with integrated lift slings around the container, or were attached to a specially made pallet, or were manufactured a metal lifting device that the container sat on. These handling devices allowed the container to be filled from the top and discharged from the bottom.

The initial cost of these heavy-duty containers is high; therefore, they are designed to be reused many times in a closed-circuit system, where problems of control logistics, prevention of contamination, cleaning, and liability for loss or damage can be agreed on by the shipper and receiver of the product.

Flexible intermediate bulk containers manufactured with polyolefin fabrics were experimented with in England, Japan, Canada, and the United States all at about the same time in the late 1960s to the early 1970s. It was the development of these high-strength light-weight fabrics (i.e., polypropylene) that spurned the growth of the flexible bulk bags that is universally used today.

The rapid growth in Europe in the manufacture of FIBCs occurred in the mid-1970s during the oil crisis. The oil-producing countries building program required large quantities of cement. The demand for cement was shipped in FIBCs at the rate of 30,000–50,000 metric tons per week from Northern Europe, Spain, and Italy to the Middle East.

The demand for bulk bags in the United States grew slower than in Europe until 1984, when the U.S. Department of Transportation (DOT) agreed to grant exemptions for the shipment of hazardous products in FIBCs. Performance standards for FIBCs were established and issued by the Chemical Packaging Committee of the Packaging Institute, USA under T-4102-85. These standards were used to obtain exemptions until DOT included flexible containers with the other types of IBCs in the regulation HM181-E for hazardous products.

DESIGN

The flexible bulk container offers many features that are unique to this package. It can be folded flat and baled for shipment to the user. The weight of a bulk bag to ship one metric ton of product weighs 8–10 lb, offering a low package:product weight ratio. The cost of FIBCs is competitive with other forms of packaging because it is usually utilized without pallets. They are easy to store and handle in warehouses with standard equipment. When shipping by boat, the FIBCs are gang-loaded with up to 14 bulk bags on a spreader bar, and they are shipped as break bulk.

The standard diameter of FIBCs is 45–48 in., designed to fit two across in a truck or a shipping container. Special configured containers are made to meet specific requirements of the container user.

FIBCs generally are manufactured to meet specific requirements of the container users. The height of the container, the diameter and length of the spouts, coated or uncoated fabric, and whether a polyethylene liner is necessary will be specified according to the type of product that will be shipped.

USES

Modern FIBICs transport over 0.25×10^9 t of goods per year. They are used to store and move a variety of products such as cereals, powdered chemicals, flour, and animal feeds. With a capacity of of up to $3\,m^3$ and load capability of 0.5–2 t, FIBCs are highly cost effective, easily recyclable, and ideal for free-flowing granules, powders, pellets, and flakes (2).

When hazardous products are shipped in FBCs, the UN mark for the product must be printed on the container body. In the United States the manufacturer of the container is self-certifying and marks the container according to the regulations HM 181E. All other countries require the container manufacturer to submit containers to third-party testing for certification.

FIBCs containing nonhazardous or nonregulated product when shipped export from the United States must have performance testing certification if destined for a country that require performance standards for bulk bags.

The following regulation numbers apply for performance standards for containers with regulated products: United States, HM 181E; United Nations, Chapter 16; England, B.S. 6939; Canada, CGSB 43.146.

BIBLIOGRAPHY

1. B. Cuthbertson, "Flexible Intermediate Bulk Containers" in A. J. Brody and K. S. Marsh, eds., *The Wiley Encyclopedia of Packging Technology,* 2nd edition, John Wiley & Sons, New York, 1997, pp. 448–449.

Cited Publications

1. Flexible Intermediate Bulk Container Association, www.flexintcontainerassoc.com/index html, September 2008.
2. J. J. Wooster, "Packaging Flexible" in *Mark Encyclopedia of Polymer Science and Technology,* Vol. 3, John Wiley & Sons, Hoboken, NJ, 2003, p. 361.

FOAM, EXTRUDED POLYSTYRENE

Phillip A. Wagner
The Dow Chemical Company,
Midland, Michigan
Updated by Staff

INTRODUCTION

Polystyrene foam sheet is a reduced-density sheet made from polystyrene by the extrusion process. Produced in many forms, it is most easily classified by its density and thickness. This article deals with a sheet that has densities of 3–12 lb/ft^3 (0.05–0.19 g/cm^3) and thickness 0.012–0.250 in. (0.3–6.35 mm). Foamed thermoplastics provide excellent insulating properties because of their low thermal conductivity, good shape retention, and good resistance to moisture pickup (1).

The first extruded foam sheet was produced in 1958 by extruding expandable polystyrene beads. In the early 1960s, the direct-gas-injection extrusion technology was developed and is by far the most widely used system today. In the late 1980s and early 1990s, there was a decrease in the volumes of foam produced due to the environmental issues related to the blowing agents being used and disposal of the foam. The use of new and more ecologically acceptable blowing agents and increased recycling of the products has reduced these concerns. Most of the foam is used for disposable packaging such as meat and produce trays, egg cartons, containers and trays for carryout meals, and disposable dinnerware. It is also used for drink cups, bottle labels, miscellaneous cushion packaging, and applications where it is laminated to paper or films. A large percentage of all foam sheet produced is thermoformed to manufacture the finished product. When it is laminated with paper, it is usually fabricated by die cutting and scoring to produce folding containers.

PRODUCTION

There are four direct gas injection processes to produce polystyrene foam sheet. All four have the same objectives: to melt the polymer, uniformly mix in the blowing agent and nucleator, cool the melt, and allow the mix to expand into a biaxially oriented sheet. The four processes employ large-diameter or long L/D extruders, twin screw extruders, the Winstead system using a single screw extruder and its cooling system, and the two single-screw extruder tandem system. Of these processes, the tandem system is most successful and widely used (see Figure 1).

The tandem extruder system utilizes two single-screw extruders: a primary extruder for melting, mixing, and feeding the extrudate to a secondary extruder for cooling and additional mixing of the extrudate prior to exiting an annular die. Most tandem systems use 4.5-in. (11.4-cm) primary extruders and 6-in. (15.2-cm) secondary extruders with output rates of 500–1200 lb/h (227–544 kg/h). As producers strived for higher output rates, 6-in. (15.2-cm) primary and 8-in. (20.3-cm) secondary extruders with output rates of 900–2000 lb/h (408–909 kg/h) have become more popular. Tandem foam lines are supplied by several extruder manufacturers (see also Extrusion).

In addition to the rather unique extrusion system, the die–mandrel–takeoff system must be carefully designed. As mentioned above, an annular die is generally used because of the three-dimensional expansion of the foam. The foam is drawn over a cooling sizing mandrel to cool the foam and provide the desired sheet width. Blowup ratios and the die diameter:mandrel diameter ratio must be calculated according to the density and desired orientation of the foam to be produced. Ratios of 3:1 to 4.5:1 are common. This tubular sheet is slit into the required widths as it is drawn off the mandrel and is then wound into rolls.

RAW MATERIALS

The ingredients required to produce foam sheet are resin, nucleator, and blowing agent. The resin is normally a high-heat general-purpose polystyrene such as Dow Styron 685D. Nucleators, such as talc or a citric acid–sodium bicarbonate mixture, are added to provide foaming sites to obtain the desired cell size and uniformity. The chlorinated fluorocarbons formerly used as blowing agents have been replaced with more environmentally friendly substitutes, such as HCFCs (HFC-152a) or low-molecular-weight hydrocarbons such as butane or isopentane, carbon dioxide, and blends of these blowing agents (1). The blowing agent is dissolved and held in solution by the pressure in the extruder (2). The blowing agent is injected into the primary extruder approximately two-thirds of the way up the barrel. This is accomplished by the use of a positive-displacement volumetric pump. The amount and

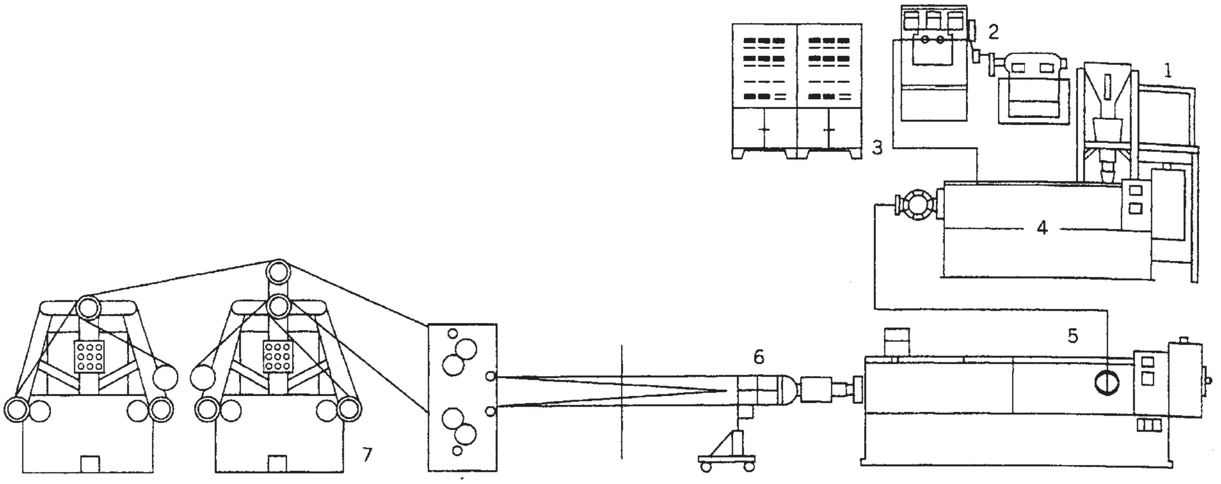

Figure 1. A two-extruder tandem system for the production of foamed sheet: (**1**) continuous feeding and blending system; (**2**) volumetric pump system; (**3**) process control; (**4**) primary extruder; (**5**) secondary extruder; (**6**) annular die and cooling mandrel; (**7**) draw rolls and winders.

type of blowing agent control the density of the foam produced. Figure 2 shows the relationships for three of today's most commonly used blowing agents. The foam can also be colored for aesthetics by the addition of color concentrates (see also Colorants).

A large percentage of all foam sheet is thermoformed to produce the final product. To achieve good postexpansion of the sheet, the sheet should be allowed to age for 3–5 days. This aging allows cell gas pressure to reach equilibrium. Matched metal molds are normally used in the thermoforming process. Oven temperature control is critical for consistent thermoforming. Scrap produced from the extrusion and thermoforming process can be reprocessed by grinding the scrap and densifying it in an extruder.

ENVIRONMENTAL CONCERNS

Ecologically, polystyrene foam is very easily recycled, and significant quantities are presently being reused. It also conforms favorably to current forms of disposal, such as landfill and incineration. In landfill, foam remains inert, but it packs and crushes easily and there is no pollution of underground water streams by decaying material. In incineration the chief products of combustion are water, carbon dioxide, and carbon monoxide, which are typical of organic materials, and the Btu (British thermal unit) value is high. If burned without enough oxygen, polycyclic aromatic compounds, carbon mooxide, and carbon black are produced. Use of polystyrene for food packaging has been banned in some U.S. cities (San Francisco and Oakland are the latest to pass bans). Recycled polystyrene can be used for park benches, flower pots, and toys.

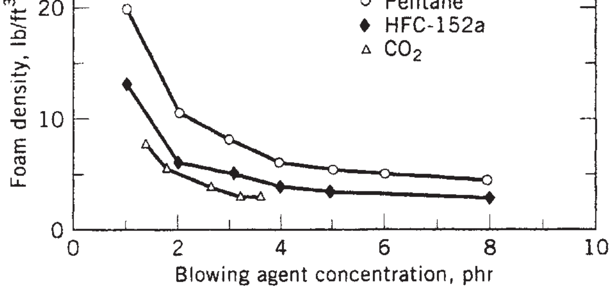

Figure 2. Blowing-agent requirements for polystyrene foam. HFC-152a (Formacel Z-2) data supplied by DuPont. To convert lb/ft^3 to g/cm^3, multiply by 0.0162.

BIBLIOGRAPHY

P. A. Wagner, "Foam Extruded Polystyrene" in: A. J. Brody and K. S. Marsh, eds., *The Wiley Encyclopedia of Packaging Technology,* 2nd edition, John Wiley & Sons, New York, 1997, pp. 449–450.

Cited Publications

1. M. Xanthos and D. B. Todd, "Plastics Processing" in the *Kirk–Othmer Encyclopedia of Chemical Technology,* Vol. 19, 5th ed., John Wiley & Sons, Hoboken, NJ, 2006.
2. C. I. Chung, *Extrusion Principles and Practise,* Carl Hanser Verlag, Munich, 2000.

FOAM PLASTICS

K. W. Suh
M. H. Tusim
The Dow Chemical Company,
Midland, Michigan

Foamed plastics, which are also known as *cellular plastics* or *plastic foams*, have been important since primitive humans began to use wood, a cellular form of the polymer cellulose. Cellulose is the most abundant of all naturally occurring organic compounds, which represents approximately one third of all vegetable matter in the world. The high strength:weight ratio of wood, the good insulating properties of cork and balsa, and the cushioning properties of cork and straw have contributed to the development of the board range of cellular synthetic polymers in use today.Cellular polymers have been commercially accepted for a wide variety of applications since the 1940s. The total usage of foamed plastics in the United States rose from about 2.1×10^6 tons in 1993. It is expected to rise to about 2.9×10^6 metric tons in 1998 (1).

NOMENCLATURE

A *cellular plastic* is defined as a plastic whose apparent density is decreased substantially by the presence of numerous cells disposed throughout its mass (2). In this article, the terms *cellular polymer, foamed plastic, expanded plastic*, and *plastic foam* are used interchangeably to denote all two-phase gas–solid systems in which the solid is continuous and composed of a synthetic polymer or rubber.

THEORY OF THE EXPANSION PROCESS

Foamed plastics can be prepared by various methods. The most widely used, which is called the *dispersion process*, involves dispersion of a gaseous phase throughout a fluid polymer phase and the preservation of the resultant state. Other methods of producing cellular plastics include sintering dispersed small particles and dispersing small cellular particles in the plastic. The latter processes are relatively straightforward techniques of lesser commercial importance.

The expansion process has been the subject of extensive investigation because it is the foundation of foamed plastics (3–6). In general, the expansion process consists of three steps: creation of small discontinuities or cells in a fluid or plastic phase, growth of these cells to a desired volume, and stabilization of the resultant cellular structure by physical or chemical means.

Bubble Initiation. The development of bubbles within a liquid or polymer solution is generally called *nucleation*, although the term actually refers only to those bubbles that separate from the supersaturated liquid or polymer solution in the presence of an initiating site such as a surface irregularity. This process has several sources: (a) dissolved gases that are normally present in the liquid or polymer solution and forced into supersaturation by increased temperature; (b) low-boiling liquids that are incorporated into the system as blowing agents and forced into the gas phase by increased temperature and decreased pressure; (c) gases produced as blowing agents, eg, by the water—isocyanate reaction used for CO_2 production in polyurethane foams; and (d) chemical blowing agents that decompose thermally to form a gas.

Bubble nucleation is affected by many conditions. Physically, the effects of temperature, pressure, and in some cases humidity are fairly obvious. Other important parameters are surface smoothness of the substrate, surface characteristics of filler particles, presence and concentration of certain surfactants or nucleators, size and amount of second-phase liquid bubbles, and the rate of gas generation.

In many cases, bubbles of gas and other contaminants are already present in the liquid or polymer solution, and these serve as sites into which the gas may diffuse. The number and size of these gas bubbles may be another important factor in bubble development.

Bubble Growth. The initial bubble is ideally a sphere that grows as a result of the interaction of the differential pressure (ΔP) between the inside and outside of the cell and the interfacial surface tension (γ). The radius (r) of the bubble at equilibrium is related to these factors as shown in equation (1):

$$\Delta P = \frac{2\gamma}{r} \tag{1}$$

The differential pressure is larger for a small bubble at a fixed surface tension. Accordingly, smaller bubbles tend to equalize these pressures by growing faster, breaking the wall separating the cells, or by diffusion of the blowing agent from the small to the large cells as indicated by equation (2):

$$\Delta P_{1.2} = 2\gamma\left(\frac{1}{r_1} - \frac{1}{r_2}\right) \tag{2}$$

where $\Delta P_{1.2}$ is the difference in pressure between cells of radius r_1 and r_2. Therefore, the rate of growth of the cell depends on the viscoelastic nature of the polymer phase, the blowing-agent pressure, the external pressure on the foam, the cell size, and the permeation rate of blowing agent through the polymer phase.

Bubble Stabilization. Bubble stability during growth is a function of the type and concentration of surfactant, rate of bubble growth, viscosity of the fluid medium, differential pressure variations, and presence of cell-disrupting agents such as solid particles, liquids, or gases. As the cell walls are squeezed into polyhedra, a wall-thinning effect takes place, and liquid is drained from cell-wall faces into the lines of cell intersections to form ribs or struts, which are typically triangular in cross section. This cell-wall membrane thinning can continue to the point where the cell walls collapse and the cells open. This becomes an important characteristic of most plastic foams and affects properties such as thermal conductivity, moisture absorption, breathability, and load bearing.

Ultimate stabilization occurs as a result of either chemical reaction continuing to the point of complete gelation or the physical effect of cooling below the second-order transition point to prevent polymer flow. As the final solidification is approached, the previously formed bubbles may be distorted by the system flow or gravity, which thereby produce anisotropy in the cellular structure. This effect must be considered when evaluating the physical properties of plastic foams by obtaining samples oriented in specific directions to the process flow.

PROPERTIES

The data in Table 1 show the broad ranges of properties of rigid foamed plastics (7); the manufacturer should be consulted for the properties of a particular product. The properties of some commercial flexible foamed plastics are given in Table 2 (7). These values depend on several structural variables and should be used only as general guidelines (see also the Polymer properties article).

The properties of a foamed plastic depend on composition and geometry, which are often referred to as *structural variables*. Furthermore, they are influenced by the foam structure and the properties of the parent polymer. The polymer phase description must include the additives present.

Cells. A complete knowledge of the cell structure of a particular polymer would require the size, shape, and location of each cell. Because this is impractical, approximations are employed. Cell size has been characterized by measurements of the cell diameter and as a measurement of average cell volume. Mechanical, optical, and thermal foam properties depend on cell size.

Geometry. Cell shape is governed predominantly by final foam density and the external forces exerted on the cellular structure before its stabilization in the expanded state. In the presence of external forces, the cells may be elongated or flattened. Cell orientation can influence many properties.

Fraction open cells. An important characteristic of the cell structure is the extent of communication with other cells. This is expressed as *fraction open cells*.

Gas composition. In closed-celled foams, the gas phase in the cells can contain blowing agent (so-called captive blowing agent), air, or other gases generated during foaming. Thermal and electrical conductivity can be profoundly influenced by the cell-gas composition.

Mechanical Properties. In mechanical properties, rigid foams differ from flexible foams. The tests used to characterize them are therefore different, as are their application properties. In the last two decades, a separate class of high-density, rigid cellular polymers called *structural foams* (density $>0.3\,\mathrm{g/cm^3}$) have become commercially significant.

Structural variables that affect the compressive strength and modulus of a rigid plastic foam are, in order of decreasing importance, plastic-phase composition, density, cell structure, and plastic state. The effect of gas composition is minor with a slight effect of gas pressure in some cases.

Structural foams or foams with integral skins are usually produced as fabricated articles in injection-molding or extrusion processes. They have relatively high densities, and cell structures are composed primarily of holes in contrast to a pentagonal dodecahedron structure in low-density plastic foams. Because structural foams are generally not uniform in cell structure, they exhibit considerable variation in properties with article geometry.

In flexible foams, which are used in comfort cushioning, packaging, and wearing apparel, different mechanical properties are emphasized than for rigid foams. The compressive nature of flexible foams, both static and dynamic, is their most significant mechanical property. Other important properties are tensile strength and elongation, tear strength, and compression set.

Thermal Properties. The thermal conductivity of cellular polymers has been thoroughly studied in heterogeneous materials and plastic foams (8). Heat transfer can be separated into its component parts as follows:

$$k = k_s + k_g + k_r + k_c \tag{3}$$

where k = total thermal conductivity and k_s, k_g, k_r, and k_c represent solid conduction, gases conduction, radiation, and convection, respectively.

As a first approximation, the heat conduction of low-density foams through the solid and gas phases can be expressed as the product of the thermal conductivity of each phase and its volume fraction. In most cellular polymers, the conduction through the solid phase is determined primarily by the density and the polymer-phase composition. Although conductivity through gases is much lower than through solids, the amount of heat transferred through the gas phase in a foam is usually the largest component of a total heat transfer because of the large gas-phase volume. Ordinarily, convection cannot be measured in cells of diameter less than $\sim 4\,\mathrm{mm}$ (8). Because most cellular polymers have cell diameters of $<4\,\mathrm{mm}$, convection can be ignored. Radiant heat transfer through cellular polymers has also been studied (8). The increase in k at low densities is caused by increased radiant heat transfer; at high densities, by an increasing contribution of k_s.

The thermal conductivity of most materials decreases with temperature. When the foam structure and gas composition are not influenced by temperature, the k of the cellular material falls with decreasing temperature. The thermal conductivity of a cellular polymer can change on aging under ambient conditions if the gas composition is influenced by aging. This is the case when oxygen or nitrogen diffuses into cellular foams that initially have an insulating fluorocarbon blowing agent in the cells (8). The thermal conductivity of foamed plastics varies with thickness (9). This has been attributed to the boundary effects of the radiant contribution to heat transfer.

The specific heat of a cellular polymer is the sum of the specific heats of each of its components. The contribution of the gas is small and can often be neglected.

Table 1. Physical Properties of Commercial Rigid Foamed Plastics

														Polyurethane			
					Polystyrene											Isocyanurate	
Property	ASTM Test	Cellulose Acetate	Epoxy	Phenolic	Extruded Plank			Expanded Plank		Extruded Sheet		PVC		Polyether		Bun	Laminate	Urea—formaldehyde
Density, kg/m^{3a}		96–128	32–48	32–64	35	53	16	32	80	96	160	32	64	32–48	64–128	32	32	13–19
Mechanical properties, compressive strength, kPa^b at 10%	D1621	862	138–172	138–620	310	862	90–124	207–276	586–896	290	469	345	1,035	138–344	482–1896	210	117–206	34
Tensile strength, kPa^b	D1623	1172		138–379	517		145–193	310–379	1020–1186	2070–3450	4,137 6,900	551	1,207	138–482	620–2000	250	248–290	
Flexural strength, kPa^b	D790	1104		172–448	1138		193–241	379–517				586	1,620	413–689	1380–2400			
Shear strength, kPa^b	C273	965		103–207	241			241				241	793	138–207	413–896	180	117	
Compression modulus, MPa^b	D1621	38–90	3.9		10.3			3.4–14				13.1	35	2.0–4.1	10.3–31			
Flexural modulus, Mpa^b	D790	38			41			9.0–26				10.3	36	5.5–6.2	5.5–10.3			
Shear modulus, MPa^b	C273			2.8–4.8	10.3			7.6–11.0				6.2	21	1.2–1.4	3.4–10.3		1.7	
Thermal properties, thermal conductivity W/(m · K)	C177	0.045–0.046	0.016	0.029	0.030		0.037	0.035	0.035	0.035	0.035	0.023		0.016–0.025	0.022–0.030	0.054	0.019	0.026
			0.022	0.032													0.030	
Coefficient of linear expansion, $10^{-5}/^{\circ}C$	D696		1.5	0.9	6.3	6.3	5.4–7.2	5.4–7.2					5.4–7.2	7.2	7.2			
Maximum service temperature, °C		177	205–260	132	74		74–80	74–80	74–80	77–80	80			93–121	121–149	149	149	
Specific heat, kJ/(kg · K)^c	C351				1.1									~0.9	~0.9	~0.9		
Electrical properties					1.19–1.20	<1.05	<1.05	1.02	1.02	1.02	1.27	1.28			1.05	1.1	1.4	
Dielectric constant	D1673	1.12			0.028–0.031	<0.0004	<0.0004	0.0007	0.0007	0.0007	0.00011	0.00014			13	18		
Dissipation factor		20																
Moisture-resistance water absorption, vol%	C272	4.5		13–51	0.02	0.05	1–4	1–4	1–4									
Moisture-vapor transmission, g/(m · s · GPa)^b	E96		58		35		<120	35–120	23–35	86	56	15		35–230	50–120		230	1,610–2,000

Source: Suh and Webb (7).

[a] To convert kg/m^3 to lb/ft^3, multiply by 0.0624.

[b] To convert kPa to psi, multiply by 0.145.

[c] To convert kJ/(kg · K) to Btu(lb · °F), divide by 4.184.

Table 2. Physical Properties of Commercial Flexible Foamed Plastics

							Polyethylene			Polypropylene		Polyurethane				Silicone	
Property	ASTM Test	Expanded Natural Rubber		Expanded SBR	Latex Foam Rubber		Extruded Plank	Extruded Sheet	Crosslinked Sheet	Modified	Sheet	Standard Cushioning	High-Resilience Type	Poly(vinyl Chloride)		Liquid	Sheet
Density, kg/m^{3a}		56	320	72	80	130	35	43	26–28	64–96	10	24	40	56	112	272	160
Cell structure		Closed	Closed	Closed	Open	Open	Closed	Closed	Closed	Closed		Open	Open	Closed	Closed	Open	Open
Compression strength 25%, deflection, kPa^{b}	D33574 D3575						48			206	4.8	5.7	4.6				
Tensile strength, kPa^{b}	D33574		206	551	103		138	41		344		118	103	10.3	24	36 at 20%	
Tensile elongation, %	D33574				310		60	276	276–480	1380	138–275	205	160			227	310
Rebound resilience, %	D3574				73			50		75		40	62				
Tear strength, (N/m)^{c} × 10^{2}	D3574						10.5	26				4.4	2.4				
Maximum service temperature, °C		70	70	70			82	82	79–93	135	121					350	260
Thermal conductivity, W/(m·K)	C177	0.036	0.043	0.030		0.050	0.053	0.040–0.049	0.036–0.040	0.039	0.039			0.03	0.040	0.078	0.086

Source: Suh and Webb (7).

[a] To convert kg/m^3 to lb/ft^3, multiply by 0.0624.

[b] To convert kPa to psi, multiply by 0.145.

[c] To convert kJ/(kg · K) to Btu/(lb · °F), divide by 4.184.

The coefficients of linear thermal expansion of polymers are higher than those of most rigid materials at ambient temperatures because of the supercooled liquid nature of the polymeric state. This large coefficient is carried over directly to the cellular state. A variation of this property with density and temperature has been reported for foams in general (10).

Moisture Resistance. Plastic foams perform better than other thermal insulation materials when exposed to moisture, particularly when subjected to a combination of thermal and moisture gradients.

Moisture absorption and freeze–thaw resistance of various insulations and the effect of moisture on thermal performance show that in protected-membrane roofing applications, the order of resisting moisture pickup is extruded polystyrene γ polyurethane $>$ molded polystyrene (11). Water absorption values for insulation in use for 5 years were 0.2 vol% for extruded polystyrene, 5 vol% for polyurethane without skins, and 8–30 vol% for molded polystyrene. These values correspond to increases in k of 5–265%. For below-grade applications, extruded polystyrene was better than molded polystyrene or polyurethane without skins in terms of moisture and thermal resistance.

Electrical Properties. Electrical insulation takes advantage of the toughness and moisture resistance of polymers along with the decreased dielectric constant and dissipation factor of the foams. In addition, because of the low dissipation factor and rigidity, plastic foams are used in the construction of radar domes.

Environmental Aging. The response of cellular materials to light and oxygen is governed almost entirely by the composition and state of the polymer phase. Expansion into the cellular state increases the surface area; reactions of the foam with vapors and liquids are correspondingly faster than those of solid polymer. All cellular polymers deteriorate under the combined effect of light or heat and oxygen; this may be alleviated by additives.

Other Properties. Cellular polymers by themselves are poor materials for reducing sound transmission. They are, however, effective in absorbing sound waves of certain frequencies. Materials with open cells on the surface are particularly effective in this respect. The presence of open cells in a foam allow gases and vapors to permeate the cell structure by diffusion and convection, thus yielding high permeation rates. In closed-cell foams, the permeation of gases or vapors is governed by the composition of the polymer phase, gas composition, density, and cellular structure. The penetration of visible light through foamed polystyrene has been shown to follow approximately the Beer–Lambert law of light absorption (10).

The resistance to rot, mildew, and fungus is related to moisture absorption. Therefore, open-cell foams support such growth better than do closed-cell foams.

MANUFACTURING PROCESSES

Cellular plastics and polymers have been prepared by processes that involve many methods of cell initiation, growth, and stabilization. The most convenient method of classifying these methods seems to be based on cell growth and stabilization. According to equation (1), the growth of the cell depends on the pressure difference between the inside of the cell and the surrounding medium. Such pressure differences may be generated by lowering the external pressure, i.e., decompression; or by increasing the internal pressure in the cells, i.e., pressure generation. Other methods of generating the cellular structure are by dispersing gas or solid in the fluid state and stabilizing this cellular state, or by sintering polymer particles in a structure that contains a gas phase (see Table 3).

Foamable compositions in which the pressure within the cells is increased relative to that of the surroundings are called *expandable formulations*. Both chemical and physical processes are used to stabilize plastic foams for expandable formulations. There is no single name for the group of cellular plastics produced by the decompression processes. The operations used are extrusion, injection

Table 3. Production of Cellular Polymers

Polymer	Extrusion	Expandable Formulation	Spray	Forth Foam	Compression Mold	Injection Mold	Sintering	Leaching
Cellulose acetate	X							X
Epoxy resin		X	X	X				
Phenolic resin		X						
Polyethylene	X	X			X	X	X	X
Polystyrene	X	X				X	X	X
Silicones		X						
Urea–formaldehyde resin				X				
Urethane polymers		X	X	X		X		
Latex foam rubber				X				
Natural rubber	X	X			X			
Synthetic elastomers	X	X			X			
Poly(vinyl chloride)	X	X		X	X	X		X
Ebonite							X	
Polytetrafluoroethylene							X	

Table 4. U.S. Cellular Polymer Market (million lb)

Foam	1990	1992	1993	1998[a]	Annual Growth, 1993–1998
Polyurethane	2681	2752	2848	3509	4.3
Polystyrene	1417	1366	1416	1624	2.8
PVC	320	340	350	395	2.5
Polyolefins	100	105	110	135	4.2
Other	62	67	70	80	2.7
Total	4580	4630	4794	5743	3.7

Source: Courtesy of Business Communications Co., Inc.
[a] Projected.

molding, and compression molding. Physical or chemical methods may be used to stabilize the products.

EXPANDABLE FORMULATIONS

Physical Stabilization. Cellular polystyrene, poly(vinyl chloride) (PVC), polyethylene, and copolymers of styrene and acrylonitrile can be manufactured by this process.

Chemical Stabilization. This method has been used successfully for more materials than the physical stabilization process. It is generally more suitable for condensation polymers than the vinyl polymers because of the fast yet controllable curing reactions. Chemical stabilization can be used for foam formation from polyurethane, polyisocyanurate, phenolic, epoxy, and silicone resins.

DECOMPRESSION EXPANSION PROCESSES

Physical Stabilization. Cellular polystyrene, cellulose acetate, polyolefins, and poly(vinyl chloride) can be manufactured by this process.

Chemical Stabilization. Cellular rubber and ebonite are produced by chemical stabilization processes.

Dispersion. In several techniques for producing cellular polymers, the gas cells are produced by the dispersion of a gas or solid in the polymer phase followed, when necessary, by stabilization and treatment of the dispersion. In frothing, a quantity of gas is mechanically dispersed in the fluid polymer phase and stabilized. Latex foam rubber was the first cellular polymer produced by frothing. In another method, solid particles are dispersed in a fluid polymer phase, the dispersion stabilized, and the solid phase dissolved or leached, thus leaving the cellular polymer. Cellular polymers called *syntactic foams* are made by dispersing an already cellular solid phase in a fluid polymer and stabilizing the dispersion.

USES

Concern over energy conservation and safety has stimulated growth in applications for insulation and cushioning in transport. A healthy economy is also expected to increase the demand for cushioning in furniture, bedding, and flooring as well as for packaging. Structural foams are widely used as substitutes for wood, metal, or unfoamed plastics. Table 4 shows the demand for plastic foams in the United States.

Cushioning. The properties of significance in the cushioning applications of cellular polymers are compression–deflection behavior, resilience, compression set, tensile strength and elongation, and mechanical and environmental aging. The broad range of compressive behavior of flexible foam is one of the advantages of cellular polymers because the needs of almost any cushioning application can be met by changing either the chemical nature or the physical structure of the foam. Flexible urethanes, vinyls, latex foam rubber, and olefins are used to make foamed plastic cushioning for automobile padding, seats, furniture, flooring, mattresses, and pillows.

Thermal Insulation. Thermal insulation is the largest application for the rigid materials because of their thermal conductivity, ease of application, cost, moisture absorption, and transmission permeance. Plastic foams that contain a captive blowing agent have much lower thermal conductivities than do other insulating materials. The low-thermal-conductivity polyurethane foams are used in refrigerators and freezers. Polystyrene foam is popular where cost and moisture resistance are important, and polyurethane foams are used in spray applications.

Extruded polystyrene foam is found in residential construction as sheathing, perimeter, and foundation insulation. Both polystyrene and polyurethane foams are highly desirable roof insulators.

Packaging. The entire range of cellular polymers from rigid to flexible is used for packaging because of their low cost, ease of application or fabrication, moisture susceptibility, thermal conductivity, consumer appeal, and mechanical properties, especially compressive properties.

Extruded Polystyrene Foam Sheet. A polystyrene foam sheet is made from a combination of polystyrene resin, blowing agents, nucleating agents, and pigments in an extrusion process (12, 13). A polystyrene foam sheet is used in many shapes and can usually be characterized by its stiffness and low density, generally 2–12 lb/ft^3 (32–190 kg/m^3). Sheet products are typically 0.015–0.150 in. thick.

The major uses for foam sheets are for disposable applications such as carryout cups and clam shells, plates, bowls, egg cartons, and meat and poultry trays. New market growth has come in the applications of a polystyrene foam sheet for use in art boards, insulated boxes, and bottle wraps. For applications that require extra stiffness or modulus, films or paper may be laminated to the foam. The foam sheet can be fabricated by die cutting and scoring, in addition to thermoforming to shape and bend the foam.

Typically, the foam-sheet process uses an annular die in the production of thin sheets. Single-screw, twin-screw, long-barrel single-screw, and tandem-extruder systems can be used with the latter being most common.

Expanded Polystyrene Beadboard. Expanded polystyrene (EPS) beadboard is produced with expandable polystyrene beads. These beads are impregnated with 5–8% pentane and sometimes with flame retardants during suspension polymerization. The beads are preexpanded by fabricators with steam or vacuum and aged. Then they are fed to steam-heated block molds where expansion and fusion of beads continue. The molded blocks are sliced after curing. Block densities range from 13 to 48 kg/m^3, with 24 kg/m^3 the most common for cushion packaging and 16 kg/m^3 for insulation.

Expandable polystyrene bead-molding products account for the main portion of the drink-cup market and are used in packaging materials, insulation board, and ice chests.

Extruded Polystyrene Loose-Fill Packaging. Loose-fill packaging particles are used in void-filling packaging applications. The foamed particles provide cushioning for lightweight, often fragile products. The foamed particles are usually resilient and are low in density [bulk density properties under <0.30 lb/ft^3 (4.8 kg/m^3)] and can be reused many times. Polystyrene loose-fill particles can be recycled. The growth of this market has been affected by the development of starch-based extrusion products.

Expandable polystyrene beads for loose-fill packaging are produced by the extrusion process. Virgin and recycled polystyrene with nucleating agents and additives are fed into the extruder, and blowing agents are usually fed downstream into the extrusion process. The blowing agents used have progressed from chlorofluorocarbons (CFCs) to hydrochlorofluorocarbons (HCFCs) to hydrocarbons or blends of hydrocarbons with carbon dioxide. Some extrusion processes can use expandable beads (pentane/isopentane blowing agent) for feedstock.

Loose-fill particles are produced by a foam-at-the-die process, or by an expandable-bead process. In the foam-at-the-die process, the molten gel is allowed to foam to a density of approximately 1–2 lb/ft^3. The foam is then cut at the die face or downstream after some cooling has occurred. The subsequent density reduction is accomplished by steam treatment, followed by air aging. The foam may be steamed and aged 2–3 times to decrease the density to below 0.25 lb/ft.^{3}

The expandable-bead process produces an unfoamed particle that has the blowing agent incorporated into the bead. The expandable beads are produced at a central extrusion location and then shipped to local expanders. Local expansion facilities are needed because of the lightweight nature of the final product. The expandable beads are exposed to steam as done with the foam-at-the-die process but will require an extra expansion step.

Polyolefin Foam Sheet and Plank. Polyolefin foams are closed-cell foams that are tough, flexible, and resilient and are used in applications such as cushioning, flotation, furniture overwrap, water sports, surface protection, and many other uses. The energy-absorbing characteristics of polyolefin foams make them excellent foams for use in cushioning applications. Polyethylene and polypropylene foams are low-density products, generally less than 10 lb/ft^3 (160 kg/m^3), which are made by the extrusion process. These foams are made in many forms—plank, sheet, rounds, and multiple strands—and can be made with crosslinked or non–crosslinked formulation.

Polyethylene and polypropylene foams are usually produced from a combination of virgin and recycled resins, blowing agents, nucleating agents, and other additives such as colorants, antistatic additives, and flame retardants. Both polyethylene and polypropylene can be made into sheet-type products, typically 0.06–0.625 in. thick (2–15 mm) by up to 72 in. (1800 mm) wide. Because of the low melt strengths typical of polypropylene, only polyethylene is used in the manufacture of large cross sections of foam of 2–4-in. (50–100-mm) thickness and 24–48-in. (600–1200-mm) width. Planks of foam are often fabricated into specific shapes to meet the packaging requirements of electronic components such as computers and their monitors, the handling requirements for water sports uses such as boogie boards, or the part separation requirements of multiple-use industrial applications.

Noncrosslinked polyolefin sheet foams can be made on single-, dual-, and twin-screw extrusion lines that are designed to mix in large quantities of blowing agents and then extruding the supersaturated gel through an annular die at the proper temperature, usually very near the crystalline melting point. Figure 1 shows the theoretical relationship between the blowing-agent content and the expected foam density. To produce a foam with a density of ~ 2 lb/ft^3 (32 kg/m^3), the extrusion system must be able to mix in 6–16 lb of blowing agent per 100 lb of resin, depending on the blowing agent selected. The gel pressure at the die is also very important. If the

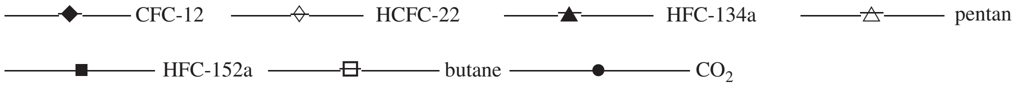

Figure 1. Effect of blowing-agent concentration of theoretical foam density.

pressure is too low, then the blowing agent will begin to come out of solution and will allow the molten gel to begin foaming prior to exiting the die lips. If this occurs, then severe disruption of the skin surface will occur and a poor-quality foam will result. Blowing agents are injected into the molten resin gel downstream from the hopper. The exact location will depend on the type of equipment being used. To extrude sheet products that are very wide and very thin, an annular die and forming mandrel is used. The proper-size forming mandrel allows the extruded tube to be stretched both radially and downstream at the same time, and the mandrel provides a means to cool the inner surface of the foam tube. The cooled tube is then slit at one or two locations and subsequently wound into rolls. Plank extrusion is usually through a more rectangular-shaped die onto a conveyor belt or some other means to move the foam away from the die. Plank extrusion is usually through a more rectangle-shaped die onto a conveyor belt or some other means to move the foam away from the die. Plank extrusion usually requires higher rates than sheet because of the larger die opening and the need for maintaining sufficient pressure to prevent prefoaming.

Polyolefin foam manufacture generally uses physical agents, which are materials that are a gas at the foaming temperature (usually at the resin melting point). Chemical blowing agents are rarely used in noncrosslinked applications. Blowing agents for polyolefin foam extrusion are now typically hydrocarbons (14) or a blend of hydrocarbon and carbon dioxide. Prior to the Montreal Protocol agreements, CFC-114 was the main foaming agent used in polyolefin foams. CFC-114 was an excellent foaming agent because of its solubility and permeability characteristics. Another strong attribute was its nonflammable characteristic. With the Montreal Agreement, use of CFCs was prohibited after 1991 in noninsulating applications. The CFC-114 replacement list for foaming agents was not long. Hydrocarbons (propane, butane, and isobutane), HCFCs (22,142b), HFCs (152a, 134a), and carbon dioxide were considered. Most of the replacement options included an increase in flammability and an increase in cost to the manufacturing operations. The use of carbon dioxide is attractive in terms of cost, flammability, and environmental safety, but the processing aspect makes total substitution difficult. Because of the high vapor pressure of this physical gas, maintaining the proper resin-blowing-agent solution characteristics at the die is very difficult. The Clean Air Act of 1990 (CAA) has since further reduced the blowing-agent alternatives. The CAA has prohibited the use of HCFCs, leaving only hydrocarbon and their blends, HFCs (15), and carbon dioxide, or blends thereof.

Crosslinked foams offer higher temperature stability, more flexibility, finer cell size, and better thermoforming properties than do noncrosslinked foams. Crosslinking of the olefin resin is accomplished by chemical crosslinking (such as dicumyl peroxide or silanes) or radiation crosslinking via X-ray or electron-beam exposure (7). Typically, the polyethylene resin, additives, crosslinking agents, and chemical blowing agents (such as azodicarbonamide) are mixed together at temperatures below the activation temperature of the blowing agents, and then extruded into a flat sheet that can be rolled up, or into some other profile, prior to expansion into a foam product.

Crosslinking occurs before the foam-expansion step. Expansion is done by exposure of the crosslinked sheet to hot (~200°C) air. Generally, chemical crosslinking is used in the production of thick products, whereas radiation crosslinking is used for thinner foams.

HEALTH AND SAFETY FACTORS

Flammability. Plastic foams are organic and therefore combustible. All plastic foams should be handled, transported, and used according to manufacturers' recommendations and local and national regulations.

Virtually all plastic foams are blown with inert gases, chemical blowing agents that release inert gases, hydrocarbons containing three to five carbon atoms, chlorinated hydrocarbons, and hydrochlorofluorocarbons such as HCFC-22, HCFC-141b, and HCFC-142b.

Atmospheric emissions. Certain organic compounds generate smog photochemically. Interaction with the total environment must be considered in developing environmentally acceptable blowing agents. The products of combustion of plastic foams are usually carbon monoxide and carbon dioxide with smaller amounts of many other substances.

The presence of additives or unreacted monomer in certain plastic foams can limit their use where food or human contact is anticipated. The manufacturers' recommendations and existing regulations should be followed.

BIBLIOGRAPHY

1. H. Kibbel, P-120R, *Polymeric Foams*, *A Huge Sub-Industry*, Business Communications Company, Inc., Norwalk, CT, 1994.
2. ASTM D883-80C, *Definitions of Terms Relating to Plastics*, American Society for Testing and Materials, Philadelphia, PA, 1982.
3. K. C. Frisch and J. H. Saunders, *Plastic Foams*, Vol. 1, Parts 1 and 2, Marcel Dekker, New York, 1972 and 1973.
4. C. J. Benning, *Plastic Foams*, Vol. 1 and 2, Wiley-Interscience, New York, 1969.
5. N. C. Hilyard and co-worker, *Mechanics of Cellular Plastics*, Macmillan, New York, 1982.
6. D. Klempner and K. C. Frisch, *Handbook of Polymeric Foams and Foam Technology*, Hanser Publishers, New York, 1991.
7. K. W. Suh and D. D. Webb, *Encyclopedia of Polymer Science and Engineering*, Vol. 3, 2nd edition, Wiley, New York, 1985, pp. 1–59.
8. R. E. Skochdopole, *Chem. Eng. Prog.* **57**(10), 55 (1961).
9. B. Y. Lao and R. E. Skochdopole, paper presented at 4th SPI International Cellular Plastics Conference, Montreal, Canada, SPI, New York, Nov. 1976.
10. J. D. Griffin and R. E. Skochdopole, "Plastic Foams," in E. Baer, ed., *Engineering Design for Plastics*, Reinhold, New York, 1964.
11. F. J. Dechow and K. A. Epstein, ASTM STP 660, *Thermal Transmission Measurements of Insulation*, ASTM, Philadelphia, PA, 1978, p. 234.

12. U.S. Pat. 5,250,577 (Oct. 5, 1993), G. C. Welsh (to The Dow Chemical Company).
13. U.S. Pat. 5,364,696 (Nov. 15, 1994), P. A. Wagner (to The Dow Chemical Company).
14. U.S. Pat. 4,640,933 (Feb. 3, 1987), C. P. Park (to The Dow Chemical Company).
15. U.S. Pat. 5,411,684 (May 2, 1995), M. H. Tusim and C. P. Park (to The Dow Chemical Company).

FOIL, ALUMINUM

Foil Division, Aluminum Association

Updated by Staff

INTRODUCTION

Aluminum foil is a thin-rolled sheet of pure or alloyed aluminum, varying in thickness from about 0.00017 (4.3 μm) in. to a maximum of 0.0059 (150 μ) in. (1). By industry definition, rolled aluminum becomes foil when it reaches a thickness less than 0.006 in. (152.4 μm) (see Table 1). Aluminum foil is widely sold in the consumer market in rolls of 50 cm in width and in varying lengths.

Aluminum, from which the foil is made, is a bluish silver-white trivalent metallic element that is very malleable and ductile. Noted for its light weight, good electrical and thermal conductivity, high reflectivity, and resistance to oxidation, aluminum is the third most abundant element in the earth's crust (1).

Aluminum always occurs in combination with other elements in mineral forms such as bauxite, cryolite, corundum, alunite, diaspore, turquoise, spinel, kaolin, feldspar, and mica. Of these, bauxite is the most economical mineral for production of aluminum. It can contain up to 60% alumina, which is hydrated aluminum oxide. It takes about 4 kg of bauxite to produce 1 kg of aluminum (2).

Alumina is converted into aluminum at a reduction plant or smelter. In the Hall–Héroult process, the alumina is dissolved in a molten salt called *cryolite*. The action takes place in steel boxes lined with carbon called *pots*. A carbon electrode or anode is lowered into the solution, and electric current of 50,000–150,000 A flows from the anode through the mixture to the carbon-cathode lining of the steel pot. The electric current reduces, or separates, the alumina molecules into aluminum and oxygen. The oxygen combines with the anode's carbon to form carbon dioxide. The aluminum, heavier than cryolite, settles to the bottom of the pot from which it is siphoned into crucibles. The molten aluminum is eventually processed into products.

FOIL MANUFACTURE

One of aluminum's most common uses is as foil. Aluminum foil is generally produced by passing heated aluminum-sheet ingot between rolls in a mill under pressure. Ingot is flattened to reroll sheet gauges on sheet and plate mills and finally to foil gauges in specialized foil-rolling mills.

Table 1. Physical Properties of Aluminum Foil

Property	Value
Density	$0.0976\,\text{lb/in.}^3$ ($2.70\,\text{g/cm}^3$)
Specific gravity	2.7 (approx.)
Melting range	1190–1215°F (643–657°C)
Electrical conductivity	59° IACS. vol., 200% IACS (approx.), weight
Thermal conductivity	53 W/(m · K) at 25°C
Thermal coefficient of linear expansion	13.1×10^{-6} per °F, 68–212°F (23.6×10^{-6} per °C, 29–100°C)
Reflectivity for white light, tungsten filament lamp	85–88%
Reflectivity for radiant heat, from source at 100°F (37.8°C)	95% (approx.)
Emissivity, at 100°F (37.8°C)	5% (approx.)
Atomic number	13
Atomic weight	26.98
Valence	4
Specific heat at 20°C	0.21–0.23
Boiling point	3200°F (1760°C)
Temperature coefficient of resistance (representative values per °C) at 20°C	0.0040–0.0036
at 100°C	0.0031–0.0028
Low-temperature properties—aluminum increases in strength and ductility as temperature is lowered, even down to −320°F (−195.6°C)	

A second method for producing aluminum foil, rapidly gaining popularity, involves continuous casting and cold rolling. This method can eliminate the conventional energy-intensive and costly steps of casting ingot, cooling, transporting to rolling plants, and then reheating and hot rolling to various gauges. Some lubrication is needed during the rolling stages, otherwise the foil surface becomes marked in a herringbone pattern. These lubricants are sprayed on the foil before passing through the rolls. Only oils approved for food contact must be used for foil intended for food packaging (3).

First produced commercially in the United States in 1913, aluminum foil became a highly marketable commodity because of its protective qualities, economic production capability, and attractive appearance. The first aluminum foil laminated on paperboard for folding cartons was produced in 1921. Household foil was marketed in the late 1920s, and the first heat-sealable foil was developed in 1938.

World War II established aluminum as a major packaging material. During the war, aluminum foil was used to protect products against moisture, vermin, and heat damage. It was also used in electrical capacitors, for insulation, and as a radar shield.

After the war, large quantities of aluminum foil became available for commercial use. Its applications boomed with the postwar economy. The first formed or semirigid containers appeared on the market in 1948. Large-scale promotion and distribution of food service foil in 1949 quickly expanded the market. Aluminum foil's compatibility with foods and health products contributes greatly to its utility as a packaging material.

Standard aluminum foil alloying elements are silicon, iron, copper, manganese, magnesium, chromium, nickel, zinc, and titanium (see Table 2). These elements constitute only a small percent (in most cases, no more than 4%) of aluminum-foil alloy composition.

PROPERTIES

Chemical Resistance

Resistance of aluminum foil to chemical attack depends on the specific compound or agent. However, with most compounds, foil has excellent to good compatibility.

Aluminum has high resistance to most fats, petroleum greases, and organic solvents. Intermittent contact with water generally has no visible effect on aluminum otherwise exposed to clean air. Standing water in the presence of certain salts and caustics can be corrosive.

Aluminum resists mildly acidic products better than it does mildly alkaline compounds, such as soaps and detergents. Use with stronger concentrations of mineral acids is not recommended without proper protection because of possible severe corrosion. Weak organic acids, such as those found in foods, generally have little or no effect on aluminum. A clear vinyl coating, however, is recommended for use with tomato sauce and other acetic foods.

Temperature Resistance

Since aluminum foil is unaffected by heat and moisture, it is easily sterilizable and is actually sterile when heat-treated in production. Unlike many packaging materials, aluminum foil increases in strength and ductility at lower temperatures. Its opacity protects products that would otherwise deteriorate from exposure to light (see Table 3).

Table 2. Principal Aluminum-Foil Alloys

Alloy and Temper (Aluminum Association Number)	Aluminum, %	Principal Other Elements,[a] %
	Non-Heat-Treatable	
1100–H19	99.00	0.12 Cu
1145–H19	99.45	
1235–H19	99.35	
1350–H19	99.50	
3003–H19	97.00	0.12 Cu, 1.2 Mn
5052–H19	96.00	2.5 Mg, 0.25 CR
5056–H19	93.6	0.12 Mn, 5.0 Mg, 0.12 Cr
5056–H39		
	Heat-Treatable	
2024–T4	91.8	4.4 Cu, 0.6 Mn, 1.5 Mg

[a] Nominal compositions.

Mechanical Properties

The addition of certain alloying elements strengthens aluminum. The alloys produced from these compositions can be further strengthened by mechanical and thermal treatments of varying degree and combinations. For this reason, the mechanical properties of aluminum foil are significant to an understanding of its versatility.

The lowest, or basic, strength of aluminum and each of its alloys is determined when the metal is in the annealed, or soft, condition. Annealing consists of heating the metal and slowly cooling it for a predetermined period of time. Reroll-stock from which foil gauges are produced is annealed (a process of heating and cooling) prior to the foil-rolling operations to make it softer and less brittle.

All alloys are strain-hardened and strengthened when cold-worked, as in foil rolling. When the product is wanted in the soft condition, it is given a final anneal (1).

CONVERTING

Aluminum foil is converted into a multitude of shapes and products (see Table 4). Processes involved may include converting mill rolls of plain foil by rewinding into short rolls, cutting into sheets, forming, laminating, coloring, printing, coating, and the like (4) (see Slitting and rewinding; Laminating; Printing; Coating equipment).

Packaging products account for about 75% of the market for aluminum foil (5). Aluminum foil is also used in households and institutions as a protective wrap, as well as for decorative and construction purposes.

Among packaging end uses, aluminum foil is formed into semirigid containers produced from unlaminated metal for frozen and nonfrozen foods, as well as caps, cap liners, and closures for beverages, milk, and other liquid foods (see Closure liners; Closures). It is also formed into composite containers with films and plastics to package powdered drinks, citrus and other juices, and motor oil and other auto supplies (see Cans, composite).

Aluminum foil combined with other materials such as paper or plastic film can be used to package a host of basic nonfood products, including tobacco, soaps and detergents, photographic films, drugs, and cosmetics (6).

When water-vapor or gas-barrier qualities are critical to the success of a packaging material, aluminum foil is usually considered. Aluminum-foil containers are odorless, moisture-proof, and stable in hot and cold temperatures. They were originally developed to supply bakers with cost-cutting disposable pie plates and bake pans.

A major reason for the wide use of aluminum foil in packaging is its versatility. It is adaptable to practically all converting processes and can be used plain or in combination with other materials. Aluminum foil can be laminated to papers, paperboards, and plastic films. It can be cut by

Table 3. Functional Properties of Aluminum Foil

Form Thickness	Continuous rolls and sheets 0.00017–0.0059 in. (4.3–150 μm)	Hygienic	Sterile when heat-treated in production; smooth metallic surface sheds most contaminants and moisture of sterilization
Maximum width	68 in. (1.7 m) for pack-rolled lighter gauges; 72 in. (1.8 m) for gauges 0.001 in. (25.4 μm) and heavier, single-web rolled	Sterilizable	Metal unaffected by heat and moisture of sterilization (except for staining in some cases)
Impermeability	(WVTR)[a] 0.001 in. (25.4 μm) and thicker is impermeable; 0.00035 in. (8.9 μm) has a WVTR of ≤ 0.02 g/100 in.^{2} (0.065 m^2); 24 h at 100°F (37.8°C)/100th—WVTR drops to practically zero when 0.00035-in. (8.9-μm) foil is laminated to appropriate film	Nontoxic Tasteless, odorless	Inert to or forms no harmful compounds with most food, drug, cosmetic, chemical, or other industrial products Imparts no detectable taste or odor to products
Corrosion resistance	Aluminum's natural oxide shielding, which is maintained in the presence of air, renders it substantially corrosion resistant	Opacity permanence	Solid metal, transmits no light; highly corrosion-resistant in most environments
Compatibility with food, drugs, and cosmetics	Nontoxic; corrosion-resistant to many compounds in solution	Sealability	Excellent dead fold and adhesion to a wide variety of compounds
Formability	Dead fold	Insignificantly magnetic	Provides excellent electrical, nonmagnetic shielding
Nonabsorptivity	Proof against water and wide variety of liquids	Nonsparking	The leading metallic material for applications with volatile, flammable compounds
Greaseproof	Nonabsorbent		

[a] WVTR = water-vapor transmission rate.

any method and can be wrapped and die-formed into virtually any shape. Foil can be printed, embossed, etched, or anodized.

Foil Lamination

In many laminations, light-gauge foil is the primary barrier against water-vapor transfer. While creasing can create pinholes or breaks in this barrier, problems can be minimized by proper lamination (see Laminating machinery).

Laminations of foil and waxed paper have been popular as overwraps and liners for cereal packages for more than 40 years. Snack foods that once presented a problem because of their high oil content are now wrapped by specially formulated foil-paper and foil-film laminates.

Aluminum foil laminates have been designed to meet exacting requirements of drugs used in transdermal medication systems that deliver medication through the skin at a constant rate over a specific period of time.

Peelable foil-laminated pouches protect transdermal drugs. Space-shuttle astronauts wore a U.S.-quarter-sized transdermal patch behind the ear to help prevent motion sickness.

Printing

Either side of foil may be printed directly, or the foil may be laminated to a reverse-printed clear film to provide attractive designs with accents. Use of transparent inks through which the foil can be seen produces pleasing metallic colors with no loss in brightness or sparkle.

The same presses and the same types of processes used for printing paper and plastic films are used for printing on foil and foil-paper laminations. Processes include rotogravure, flexography, letterpress, lithography, and silk screen (1) (see Printing; Decorating). Inks for all of these processes are readily available in formulations expressly made for printing on aluminum (see Inks).

To provide anchorage for the inks, prime or wash coatings are nearly always used on foil to be printed. The coatings also provide a barrier that prevents offsetting of undesirable materials from the paper to the foil surface.

Embossing

In-line or out-of-line printing and embossing units allow designs of limitless combinations of color and form. Any embossing pattern in foil produces two basic visual effects, namely, three-dimensional patterns or illustrations and continual reflective contrasts.

Foil embossing often is performed in continuous roll form by passing the web or sheet through a roll stand equipped with one engraved steel roll and a soft matrix roll of paper. The pressure for embossing may be obtained by maintaining the paper roll with the axis in a fixed position and using only the weight of the steel roll to

Table 4. Classifications for Converted and Nonconverted Aluminum-Foil End Uses[a]

Packaging End Uses

Semirigid foil containers (including formed foil lids) produced from unlaminated metal for
  Bakery goods
    Frozen
    Nonfrozen
  Frozen foods, other than bakery
Caps, cap-liners, and packaging closures for
  Beverages and milk
  Foods
Composite cans and canisters (including labels and liners for composite cans) for powdered drinks; auto supplies; food snacks; citrus and other juices; refrigerated dough; other refrigerated and frozen products
Flexible-packaging end uses (including labels, cartons, overwraps, wrappers, capsules, bags, pouches, seal hoods and overlays for semirigid foil containers)
Food products
Dairy products—cheese, butter, milk, milk powder, ice cream, dried and dehydrated food products—fruit, vegetables, potato products, soup mixes, yeast
Baked goods—bread, cookies, crackers
Cereals and baking mixes—cereals, rice, cake mixes, frosting mixes, macaroni products
Powdered goods—coffee, tea, gelatins, dessert mixes, drink powders, cocoa, dry concentrates, sugar, salt
Meat, poultry, and seafoods (fresh, frozen, irradiated, dried, retorted)
Frozen prepared foods
Confections—candy, mints, chewing gum, chocolate bars (converted foil only)
Dry snack foods—potato chips, popcorn, including coated popcorn
Beverages—soft drinks, beer, distilled liquors, wines
Food products, NEC[b] (including pet foods)
Nonfood products
  Tobacco—cigars, cigarettes
  Soaps and detergents
  Photographic film and supplies
  Drugs, pharmaceuticals, cosmetics, toiletries, kindred products
  Nonfood products, NEC[b]
  Military specification packaging[c]

Selected Nonconverted Foil Products[d]

Packaging end uses (unmounted, unconverted foil stock sold to end-users for candy and gum wraps)

[a] U.S. Department of Commerce.
[b] Not elsewhere classified.
[c] On direct government orders only.
[d] Reported by foil producers (rollers) only.

depress the negative pattern into the paper roll (see Figure 1).

FLEXIBLE FOIL PACKAGES

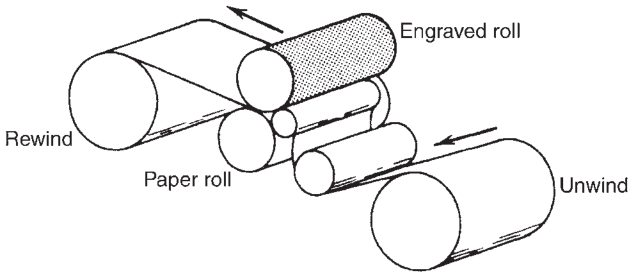

Figure 1. Foil embossing unit. An engraved steel roll, usually the top roll, carries the design, and a matching paper roll becomes the matrix. This matrix roll is constructed of layers of paper (wool-rag) rings compressed solidly into one continuous mass and mounted on an appropriate core.

Flexible foil-containing packages are extremely popular for food packaging because they provide superior flavor retention and longer shelf life than packages formed from other flexible materials. Flexible foil packaging is impervious to light, air, water, and most other gases and liquids. The packages protect contents from harmful oxygen, sunlight, and bacteria (see Figure 2) (see Multilayer flexible packaging).

One of the most important flexible-packaging applications of aluminum foil is the form/fill/seal pouch (1). Pouches are formed continously from roll-fed laminated material and are filled and sealed immediately as formed (see Form/fill/seal, horizontal; Form/fill/seal, vertical; Pouches). The pouch is one of the oldest automated-package forms. The retort pouch, developed in the early 1950s, represented a significant advance in food packaging. It is a flexible package made from a laminate of three materials: an outer layer of polyester for strength; a middle layer of aluminum foil as a moisture, light, and gas barrier; and an inner layer of polypropylene as the heat seal and food-contact material (7) (see Retortable flexible and semirigid packages).

The Q-Pouch is a new foil-lined paperboard pouch that can be turned into a drinking cup. A user of the package simply rips the top edge along perforations and squeezes the sides of the packet. Scored paperboard opens into a hexagon-shaped cup.

Aluminum foil is also used to some extent for bag-in-box liquid packaging (see Bag-in-box, liquid).

FOIL LIDDING

Another popular packaging application is the flexible closure or flexible lid. The flexible closure got its start with single-service dairy creamers, yogurt, and cheese dips. It is also widely used in the healthcare industry, especially in hospitals, where the trend is toward disposable packaging (see Healthcare packaging). Liquid medications are also packaged in single-dosage containers, which are convenient and provide easy evidence of tampering (8) (see Pharmaceutical packaging; Tamper-evident packaging).

Flexible lids were introduced in 1966 when a U.S. Health Service regulation required that the pouring lip of dairy containers be covered during shipment and storage. Besides covering the pouring lip of the container,

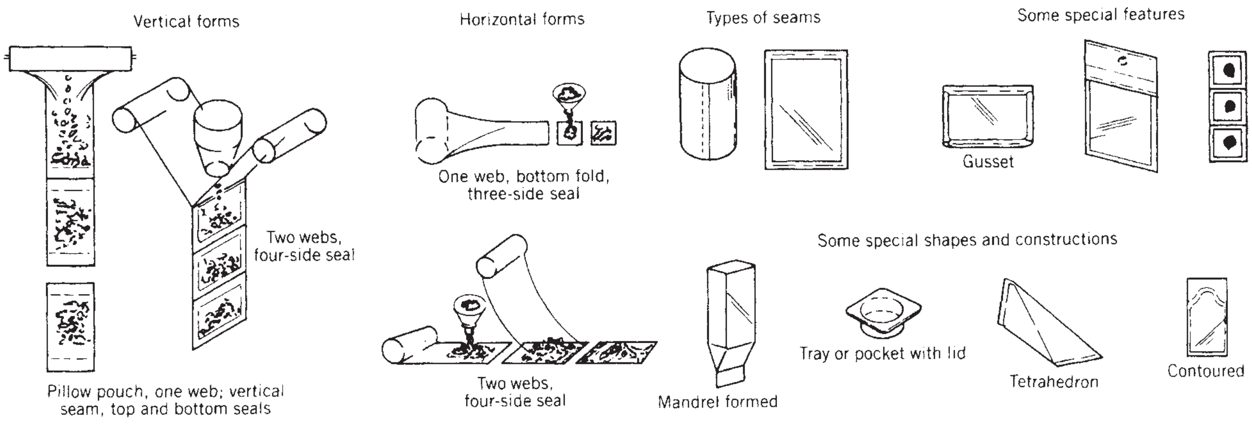

Figure 2. Features and constructions of pouches.

a heat-sealed foil lid offered a more reliable seal, longer shelf life, and greater protection than other lidding materials.

The use of inductive heat-sealing equipment instead of conductive heat sealing is broadening the applications for foil lidding. Inductive sealing does not heat the lid by direct contact. Heat is brought into the lidding stock by a magnetic field through which the container and lid pass. The magnetic field heats the foil in the lid, and an effective hermetic seal forms between the lid and the container. Flexible foil lidding can be used on glass, plastic, or composite cans. This key development enables the aluminum foil industry to provide tamper-evident packaging (see Tamper-evident packages).

REGULATED PACKAGES

Aluminum foil is an integral part of many tamper-evident packages. Although the term came into prominence only in the 1980s, this kind of packaging has been on the market before then. As now defined by the *Proprietary Association*, a tamper-evident package is “one which, if breached or missing, can reasonably be expected to provide visible evidence to consumers that the package has been tampered with or opened” (9).

Of 11 methods listed by the Proprietary Association that conformed to the regulation when it was first pronounced, six featured aluminum foil as part of the tamper-evident system.

For a system to be tamper-evident, its package cannot be removed and replaced without leaving evidence. It is extremely difficult to mend or repair a foil-membrane seal after it is broken or to return an aluminum rollon cap to its original state once it has been removed.

One of the first major laws that required protective packaging was the Poison Prevention Packaging Act of 1970, which essentially said that drugs and dangerous substances must be packed in child-resistant packages. This type of package includes blister packs of plastic–foil–paper combinations; tape seals of paper or foil which adhere to the cap or shoulder of a bottle; and pouches that can be tighly sealed.

ASEPTIC PACKAGING

Most aseptic packages are laminations of paperboard, plastic, and aluminum foil. In aseptic packaging, the product is sterilized with high heat and then cooled. The package is sterilized separately, and then the sterile product and packaging are combined in a sterile chamber (see Aseptic packaging).

Foil provides superior adhesion for the containers that, in the main, hold highly acidic products. In almost all methods of aseptic container manufacturing, aluminum foil is used as a barrier to light and oxygen.

ALUMINUM AND MICROWAVE OVENS

In 1984, Underwriters Laboratories undertook a study on the use of aluminum foil trays to reheat food in microwave ovens. Using various models of microwave ovens and standard types of aluminum trays containing frozen foods, the study concluded that (10):

> The power density of microwave radiation emissions did not exceed maximum allowable limits.
>
> There was no significant change in heat going into various liquids and frozen foods in aluminum containers as compared to other containers.
>
> The temperatures in the foods and liquids being tested were generally comparable in the various containers.
>
> The foil trays containing different amounts of water and empty trays produced no fire emissions of flaming or molten metal.
>
> The test trays used for heating frozen foods in accordance with specific instructions did not increase the risk of radiation, fire, or shock hazard.

Susceptors are a unique and successful innovation in food packaging for microwave heating of a variety of foods such as pizza and popcorn (11). They are microwave-absorbent materials used in the microwave oven to generate surface heating on the food to induce browning and crispness. A susceptor is typically constructed of a metallized PET film (about 12 mm thick) laminated to a thin paperboard. The paperboard provides dimensional stability, while the very thin metal layer discontinuous layer of aluminum (usually 30–60 Å) is responsible for generating localized resistance heating when exposed to microwaves.

SEMIRIGID PACKAGING

Other classifications of aluminum packaging include semirigid and rigid containers. Semirigid containers include those that are die-formed, folding cartons, and collapsible tubes. Die-formed containers are one-way disposable devices such as pie plates, loaf pans, and dinner trays. Folding cartons come in many sizes and shapes and hold such products as dry cereals, eggs, and milk or other liquids (see Cartons, folding; Cartons, gable top). Collapsible tubes were first made of lead and used by artists more than 100 years ago. In modern times, a proprietary aluminum foil/film version of the collapsible tube holds toothpaste and products of similar consistency, including hair coloring and depilatories (1) (see Tubes, collapsible).

Aluminum foil provides the barrier to permeation of the oils used in most products and compounds that go into the tubes.

Aluminum tubes have the advantage of providing light weight, high strength, flexibility, and good corrosion resistance. Aluminum tubes also have low permeability and offer quality appearance. Traditionally, aluminum collapsible tubes were impact-extruded, but a new process forms the laminated rollstock into continuous tubing by use of heat and pressure. The tubing is cut into individual sleeves and is automatically headed by injection molding.

As opposed to flexible containers that conform to the shape of the product, semirigid containers have a shape of their own. They can be deformed from their original shape either while they are emptied (as in the collapsible toothpaste tube), or before they are filled (as with the folding carton).

Die-formed aluminum containers are among the most versatile of all packages. They easily withstand all normal extremes of handling and temperature variation. A product in an aluminum container can be frozen, distributed, stocked, purchased, prepared, and served without soiling a single dish.

Bare foil is used for most formed aluminum-foil products, but protective coatings are used on the containers for some foods and other products. Although the frozen-food tray is the most common, the aluminum-formed container is available in scores of shapes and sizes from the half-ounce portion cup to full-size steam-table containers for institutional feeding. Closures for these containers vary from laminated hooding to the hermetically sealed closure according to the amount of protection needed for the product.

Folding cartons offer protective and display characteristics unique in packaging and have some of the advantages of both the flexible and the rigid container. Before use, when it is folded flat, the folding carton offers the storage economy of the flexible bag. When it is filled, it offers much of the protection of the setup box.

RIGID CONTAINERS

Composite cans and drums feature aluminum foil combined with fiber. They are widely used for refrigerated dough products, snack foods, pet foods, and powdered drink mixes.

In some processes, a composite can is made up of paper–polyethylene–aluminum foil–polyethylene laminated stock with a foil-membrane closure. Cans are produced from preprinted gravure rolls of bottom aluminum stock (see Cans, composite).

BIBLIOGRAPHY

Foil Division of the Aluminum Association, Inc., “Foil, Aluminum” in *The Wiley Encyclopedia of Packaging Technology*, 1st edition, John Wiley & Sons, New York, 1986, pp. 346–351; 2nd edition, 1997, pp. 458-463.

Cited Publications

1. *Aluminum Foil Manual,* the Aluminum Association, Washington, DC, 2004.
2. *The Story and Uses of Aluminum*, the Aluminum Association, Washington, DC, 1984.
3. G. Robertson, *Food Packaging, Principles and Practise,* 2nd ed., Taylor and Francis, Boca Raton, FL, 2006.
4. *Aluminum Foil Converted*, U.S. Department of Commerce, Washington, DC, 1981.
5. *Aluminum Industry/Foil,* the Aluminum Association, Washington, DC, www.aluminum.org., 2008.
6. M. J. Kirwan, *Paper and Paperboard Packaging Technology,* Blackwell Publishers, London, 2005.
7. *Food Technology*, Institute of Food Technologists, June 1978.
8. *Packaging Newsletter*, the Aluminum Association, Fall 1983.
9. News release, the Proprietary Association, Washington, DC, October 14, 1982.
10. Underwriters Laboratories, letter of July 23, 1984.
11. J. Osepchuk, “Microwave Technology” in *Kirk–Othmer Encyclopedia of Chemical Technology*, 5th edition, Vol. 16, John Wiley & Sons, Hoboken, NJ, 2006.

FOOD PACKAGE DEVELOPMENT

Kit L. Yam
Department of Food Science,
Rutgers University,
New Brunswick, New Jersey

The food packaging development process requires many considerations and activities. Below are some steps that may be used as a reference to develop a food package.

Step 1: Determine Product/Package Requirements. The first step usually involves optimizing the product formulation; determining the stability of the product particularly to light, O_2, and H_2O; evaluating the processing methods, existing equipment, plant capability; working with marketing to determine the desired shelf life, distribution chain, cost constraints, launch timing, product positioning, package size. During this step, the marketing group typically leads the discussion based upon consumer data, while the technical group provides input on feasibility.

Step 2: Select Package Materials and Equipment. This step usually involves working with suppliers of packaging materials and machinery to identify options; determining cost and availability; comparing stock versus custom package; working closely with product development to better understand ingredients and possible issues relating to packaging; complying with regulations. Since timing is critical to package design, it is important to identify potential issues that may delay the timeline.

Step 3: Evaluate Prototype Packages. This step usually involves conducting shelf-life testing to determine quality retention at ambient and elevated temperatures, conducting distribution testing to determine robustness and integrity of package, conducting product/package interaction testing; evaluating feasibility of scale-up at final production facility. Scale-up package at production facility is important prior to initial run to identify potential process issues.

Step 4: Test Packaging System in Market. This step usually involves producing final food packages; confirming that all major requirements are met; retrieving packages from market for evaluation and confirmation, monitoring consumer feedback during test market or national rollout; refining package/process design if necessary. Final package is tested as part of a concept fulfillment test to confirm consumer acceptance of product and package.

FOOD PACKAGING FOR SPACE MISSIONS

M. H. Perchonok
Department of Food Science,
Rutgers University,
New Brunswick, New Jersey
T. Oziomek
Department of Food Science,
Rutgers University,
New Brunswick, New Jersey
S. J. French
Department of Food Science,
Rutgers University,
New Brunswick, New Jersey

INTRODUCTION

The approach to National Aeronautics and Space Administration (NASA) food provisioning has changed over the last 45 years and will continue to change to accommodate the different mission profiles and vehicle designs. The goal of NASA's food scientists is to provide the crew with a safe, nutritious, and acceptable food system while efficiently balancing appropriate vehicle resources such as mass, volume, and crewtime. Because future NASA exploration missions will range in duration from 2 weeks to 6 months to an eventual 2.5-year mission to Mars, certain requirements for food packaging have been established. Similar to food industry needs, the packaging materials will need to act as a barrier that can interface with the crew/consumer, facilitate use of existing or new processing methods, prevent light transmission, and meet puncture requirements. However, unique to NASA is the requirement not to release toxins into the closed environment of the vehicle (off-gassing) and to insure seal strength to withstand changes in g-forces and atmospheric pressure. In particular, oxygen and water vapor transmission will need to be adequately prevented to maintain sensory and nutritional quality for the duration of the missions. These missions can be as long as 3 years. Mission specific proposed oxygen transmission and water vapor transmission values have been calculated using maximum allowable ingress or egress values for current products, various mission lengths, and the areas of two current pouch configurations.

This article will provide a historical and current perspective to NASA's packaged food system. In addition, as NASA returns to the moon and goes on to Mars, the food packaging requirements will change, and potential food packaging recommended attributes are provided.

HISTORY OF PACKAGING FOR NASA FOOD SYSTEMS

Mercury (1961–1963). Food packaging for space flight has been in use since Mercury 6 where John Glenn consumed 119.5 g of pureed applesauce from an aluminum tube. Mercury flights used collapsible aluminum tubes having Sunex 11-S lining that made use of a polystyrene extension tube called a "pontube" for consumption (Figure 1). As flights progressed, bite-size (ready-to-eat single serving shelf stable items) and up to four rehydratable foods made their way into the available menu

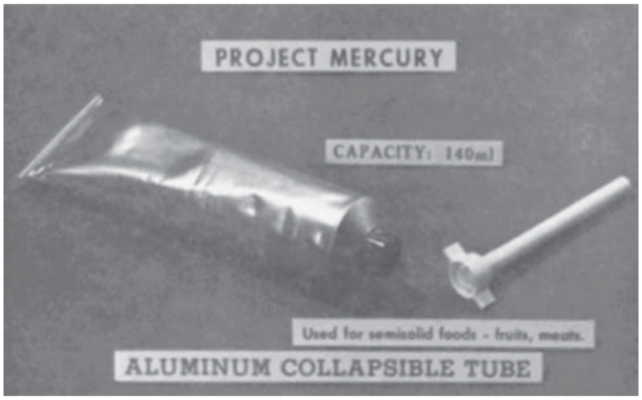

Figure 1. Aluminum collapsible tube with "pontube" used for project Mercury.

selection. Plexiglass dispensers were used for some bite-size items, whereas a three-ply laminate of clear plastic was used for other bite-size items and rehydratables (1). However, the progression to include more types of food items led to packaging related issues that resulted in decreased caloric intake. During Mercury 9, astronaut Cooper only consumed 696 kcal of the 2369 kcal available to him at launch because of problems with the food container and water dispenser during flight (2).

Gemini (1965–1966). The Gemini food was packed in a four-ply plastic laminate comprised of an inner and outer layer of polyethylene and fluorohalocarbon with polyester layers between. Overwrap material for these flights was a polyolefin-aluminum foil-polyester laminate (3).

For Apollo missions, the primary packaging material used for the rehydratable and bite-size foods was a four-ply laminate of polyethylene-Mylar (biaxially oriented polyethylene terephthalate) -Aclar® (polychlorotrifluoroethylene)-polyethylene. Rehydratable food packages used a one-way spring valve at one end for water insertion and a folded polyethylene tube for zero-g consumption at the other end. These rehydratable packages also contained a separate compartment for a germicidal tablet (1 gram of 8-hydroxyquinoline sulfate) for stabilization of uneaten food residue. Figure 2 shows two examples of rehydratable items used for Apollo missions.

Meal units, which were arranged by crewmember nutrient requirements, mission timelines, and spacecraft stowage-volume configurations, were overwrapped in a four-ply aluminum foil/plastic laminate and evacuated to a pressure of 29 inc. vacuum after a triple flush with nitrogen. Overwrapped meals were labeled by mission day, meal, crewman (by color-coded Velcro® patch), and serial number. Meals were attached to each other using a nylon lanyard to ensure ease of sequential retrieval in flight (4).

Apollo (1968–1972). The Apollo missions increased in duration resulting in a need to improve the food system. During the Apollo missions, several improvements to the food packaging were evaluated including an effort to use nonflammable materials. Smith et al. (4) describe basic design changes that were implemented, and results from those changes are as follows:

Figure 2. Rehydratable items packaged in four-ply laminate for Apollo missions.

- The meal overwrap material (four-ply aluminum foil/plastic laminate) was replaced with polytrifluorocloroethylene copolymer (Kel-F-82), which is a nonflammable material. This new material was the primary cause for an increase in food system weight of approximately 0.25 lb/person/day or 14% of the baseline weight. Material thickness was found to vary from 4 to 8 mils, with corresponding variation in flex strength. Relatively minor manipulations and abrasion of the meal overwraps frequently resulted in the formation of pinholes and loss of vacuum. However, the Kel-F-82 manufacturer improved the quality of the material through a process change resulting in improved product strength and more uniform thickness. The improved reliability of this material resulted in a highly reliable food-package material that was used with increasing frequency as a primary food package for each succeeding Apollo mission.
- The Bea-cloth lanyard used to attach sequential meals was coated with Teflon®. Flaking of the Teflon® coating presented a potential hazard of inhalation of the resultant aerosol, even in one-g conditions. As a result, Beta-cloth lanyards without Teflon® coating were used.

  During the second day of the Apollo 7 mission, the crew reported a messy failure of a side seam of a package of chocolate pudding (rehydratable). Ground based operations were modified to ensure that heat seals were at least 0.25 in. wide.
- Several water valves leaked food or water around the outside the valve. A section of Teflon® shrink tubing was used to form a leakproof friction fit of the water valve to the package.
- For rehydratable foods, a frequent point of package failure was caused by the attachment of a germicidal-tablet pouch to the outside of the finished package by a heat-seal process. The germicidal tablet was used to prevent microbial growth and subsequent odor development. The germicidal pouch was relocated as a portion of the basic-package blank cutout. The time and effort required for fabrication were reduced.
- Inefficiencies were present for packaging material usage and processing. The length of the package for semisolid foods was reduced resulting in a weight reduction of 2 g for each package and of approximately 1 lb for a mission set of food. This also resulted in a reduction of exposed combustible surface area by 7 in^2. for each package and 1470 in^2. for a mission set of food. The length of the rehydratable-beverage package was increased. This change enabled provisioning of 8-oz servings instead of 6-oz servings increasing the amount of beverage per unit weight and volume of packaging material. Automated package fabrication was instituted resulting in a package production increase from approximately 12 to 100 packages per hour.
- Pressure stresses at the package shoulder when food was squeezed from the package were higher than

Figure 3. Easy open can used for Skylab missions.

necessary. The angle of the package shoulder was lowered from 45° to 30°.

- The texture and flavor quality of rehydratable foods was lower as a result of the diameter of the mouthpiece for rehydratable foods. The diameter for the mouthpiece was increased form 0.75 in. to 1.25 in.

Skylab (1973–1974). The 1973 Skylab food system was the most palatable and varied food system to be used in space to date. All the planned food for the Skylab program was launched with the first mission, making it over 2 years old when the last crew consumed it. Therefore, most of the food was packaged in aluminum cans to maintain the 2-year shelf life. Frozen food, which required heating, and some the thermostabilized items were packaged in aluminum cans with a membrane under the lid to prevent spilling while heating and to facilitate opening in microgravity. All aluminum cans were sealed in canisters designed to withstand the pressure changes from 14.7 to 5.0 psia between the ground and the spacecraft (Figure 3). The primary package for beverages was a clear plastic pouch with a reconstitution valve attached. Expandable polymeric beverage containers were used (Figure 4).

Figure 4. Expandable beverage container used for Skylab missions.

CURRENT FOOD PACKAGING

The current state-of-the-art food packaging materials employed for International Space Stations (ISS) (2000–present) and Shuttle (1981–present) missions include Smurfit Stone's LCFLEX 70466 (LCF), Rollprint's RPP36-1080 (RPP), and Bayer's Combitherm XX115 (COM115) and XX230 (COM230). Figure 5 illustrates three of these materials.

LCF is a multilayer film that is ideal for current missions because it is lightweight, flexible, and durable. LCF includes an aluminum layer that allows the foods to be processed after packaging without sacrificing its high moisture and oxygen barrier properties. It is currently used for packaging of thermostabilized (retorted) and irradiated items. However, LCF cannot be thermoformed, is opaque, and the aluminum layer presents a solid waste issue for long duration missions.

COM115 and COM230 are clear polymers currently used for packaging bitesize (COM115 only) and freeze-dried items. COM230 is currently thermoformed into a tray to hold freeze dried items, and COM115 is used as a lid. Thermoforming COM230 results in areas with decreased thickness and thus reduced barrier capability. Freeze-dried and bite-size items packaged with COM materials are vacuum packed to 29 or 21 in. vacuum.

The COM only provides a 1-year shelf life, which is only adequate for shuttle missions. Therefore, for ISS, menu items packaged using COM materials are overwrapped using RPP to provide additional barrier capability (Figure 6). Use of this additional packaging layer creates additional upmass and trash aboard the ISS, and crewmembers have commented on the inconvenience of having to open two separate packages for each food item.

NASA DESIGN REFERENCE MISSIONS (DRM)

NASA's Exploration Systems Architecture Study (ESAS) identified seven design reference missions (5). They include three DRMs for ISS-related missions, three for lunar missions, and one for an 18-month surface mission to Mars. The timelines relative to food packaging requirements associated with these DRMs vary from 7 days plus travel for Lunar Sortie missions, to 6 months plus travel for ISS and Lunar Outpost missions, to 18 months plus travel for Mars Exploration missions.

These mission timelines can affect provisioning approach and influence the packaging material's primary requirement driver. For Mars Exploration missions, the primary driver is shelf life longevity. For Lunar Sortie missions, the primary driver may shift from shelf life longevity to an ability to safely handle cabin depressurization. However, for any mission, efficiency will always play a role in material selection.

VEHICLE DESIGNS

Temperature, relative humidity, and pressure fluctuations in the vehicle as well as exposure to radiation will

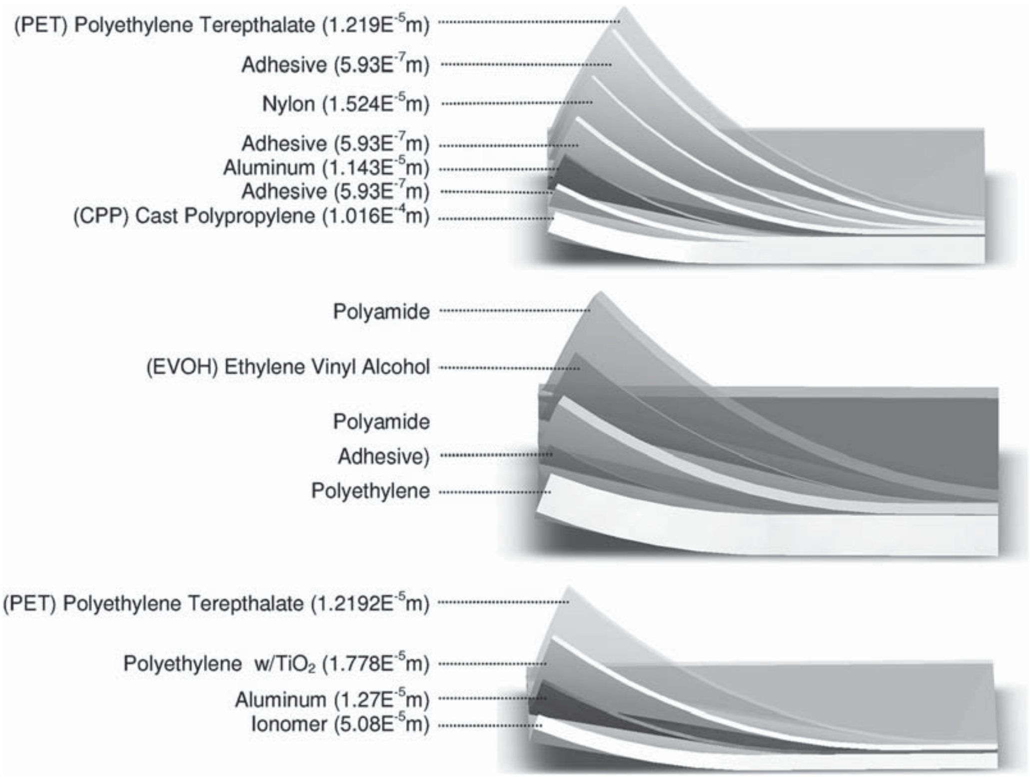

Figure 5. Composition, order and thickness of layers within LCF (top), COM115 (Layer thicknesses are proprietary, therefore are not provided), and RPP (bottom) packaging materials. COM230 is composed of the same materials as COM115, but the thickness of individual layers is not relative to overall thickness.

influence the effectiveness of any packaging material in preserving food quality. A vehicle's design can mitigate or increase the affect of these conditions. A vehicle design can also affect the required interface characteristics of the package. For example, a vehicle may possess a hydration interface, which will affect the design of packaging interface (currently a septum for freeze-dried and beverage items).

SHELF LIFE

Packaging materials are currently used to prevent ingress and egress of mass. Of primary concern to NASA is the ingress of oxygen and water vapor. Packaging materials can decrease the oxygen available for chemical reactions by slowing the transmission of oxygen to the food product. If oxygen is not minimized, the resulting compounds from

Figure 6. Freeze-dried item in primary COM packaging (left) and with RPP overwrap (right).

autoxidation and lipid oxidation will impart a variety of sensory notes that will likely be objectionable to the consumer. This will generally result in lower acceptance of the food product and hence influence shelf life.

To prevent unacceptable oxygen quality degradation effects over a specified mission timeline, the required oxygen transmission rate of a particular packaging material must be defined. In some instances, certain assumptions must be made or at minimum, a range of values should be provided. For example, the assumptions for mission timelines may add 180 days for prepositioning of food provisions. Or, the area of the packaging material may change as packaging conformation changes.

Water vapor transmission through the packaging material is also of concern to NASA as it affects the hydration characteristics of dried food items, which can lead to unacceptable texture characteristics. Packaging materials can pose a safety concern if transmission rates are sufficiently high enough to raise water activity (A_w) above 0.65 (mold growth) or 0.86 (*Staphylococcus aureus*) (6) within food items not undergoing a sterilization process.

NASA PACKAGING RECOMMENDED ATTRIBUTES

Several common attributes for food packaging materials cross over between missions as well as ground-based operations. Because water and oxygen transmission recommended rates are related to required shelf life of the food, these attributes are listed under the specific missions.

Light Transmission. In many cases, the food packages are stowed in an opaque container. Hence, light induced reactions are minimized within the food product.

Offgas Properties. Because the vehicle is a closed environment, NASA has a unique off-gassing requirement for all materials flown. The packaging material should not produce volatiles that would prove harmful to crewmembers. Off-gas levels for compounds will not exceed levels set forth by the Toxicology Laboratory at NASA's Johnson Space Center.

Processing. No refrigerators or freezers for the food are available onboard the NASA vehicles. Hence, the food must be shelf stable. Packaging materials should accommodate the processing method used for microbial and enzymatic stabilization. For example, a material may need to be able to withstand the heat extremes present in retort/thermostabilized processing without loss of integrity. Or, a material may need to allow microwaves to pass.

Puncture Strength. Puncture strength is important for the NASA food packaging materials. Damage to many food packages on board the vehicle can result in a compromised food system, which can compromise the crew health. To measure the puncture strength of each material, a TA-XTPlus (Texture Technologies, Scarsdale, NY) texture analyzer is used. A TA-108 tortilla test rig is used to fix the samples for testing. TA-52 (2-mm cylinder) and TA-55 (5-mm cylinder) probes are used to penetrate the samples. A test speed of 2.0 mm/s is used to a distance of 25 mm.

In general, punctures from food contents can be identified during ground-based operations by loss of packaging integrity. An in-to-out puncture strength of 2.5 kg is required. An out-to-in puncture strength of 1.5 kg is required.

Radiation. Packaging materials can potentially reduce or mitigate the effects of radiation on food items. As radiation effects on food require additional research and the amounts and types of radiation will be mission specific these requirements are still to be determined.

Seal Strength. Packaging materials should withstand specified environmental and stowage conditions without degrading or losing barrier integrity. Periods of reduced or zero pressure will place additional strain on package seals. Periods of increased pressure can also occur. To withstand these conditions, a seal strength of 3 kgf/in. is required.

To measure the tensile strength of seals a TA-XTPlus (Texture Technologies, Scarsdale, NY) texture analyzer is used. A TA-96 tensile test fixture is used to fix the samples for testing. A test speed of 1.5 mm/s is used to a distance of 75 mm. Seal tensile strength is measured using a 1.25 in. length by 1 in width attached on each side of the seal to the clamp.

Material Transmission Rate Calculations. Current space food products were grouped into two main categories: freeze dried/natural form food items and thermostabilized food items. The average mass was determined for each category, and the worst case scenario for O_2 ingress and H_2O ingress/egress was used for calculating the required material transmission rates. The transmission rates required to maintain the proper shelf life were determined for various mission lengths.

The following formula was used to determine the maximum allowable oxygen ingress for a specific product using information obtained from Table 1 below.

$$V_{O_2} = \frac{\text{Productmass(g)} * \text{MaxO}_2\text{(ppm)} * K}{C} \qquad (1)$$

$K = 22\,400$ cc = 1 mole ideal gas at 1 atm and 20°C

$C = 32$ g = Molar mass of O_2

Oxygen transmission rates (OTR) were calculated using information from Table 1 and equations (1) and (2). For example, the required oxygen transmission rate for freeze-dried and natural form food items on lunar sortie missions was calculated using the following information: a VO_2 value of 0.0875 cc determined using a maximum O_2 ingress value of 5 ppm (Table 1), a food mass value of 25 g, which is the average mass of our current products, a T value of 195 days, and an A of 0.0232 m^2, which is the area of the current bite size pouch. Values for determining rates on thermostabilized items were modified to use a VO_2 value of 0.112 cc determined using a maximum O_2 ingress value of 1 ppm (Table 1), a food mass value of 160 g, which is the average mass of our

Table 1. Maximum allowable ingress of O_2 loss or gain of moisture in shelf-stable products

Foods	Max O_2 ingress, (ppm)	Max H_2O gain (+) or loss (−)%
Canned milk, meats, fish, poultry, vegetables, soups, spaghetti, catsup, sauces	1–5	−3%
Canned fruit	5–15	−3%
Dried foods	5–15	+1%
Carbonated soft drinks, fruit juices	10–40	−3%
Oils, shortenings, salad dressings, peanut butter	50–200	+10%
Jams, jellies, syrups, pickles, olives, vinegar	50–200	−3%

current products, a T value of 195 days, and an A value of $0.0387\,\mathrm{m}^2$, which is the area of the current 8-oz retort pouch. Oxygen transmission rates for other missions were determined using the same values above and mission specific T values.

$$\mathrm{OTR_{atm}} = \frac{\mathrm{V_{O_2}}}{\mathrm{A} * \mathrm{T}} \tag{2}$$

Water vapor transmission rates (WVTR) were calculated using information from Table 1 and equation (3). Table 1 states that for freeze-dried and natural form food items, the max allowable moisture ingress is 1% of the product mass, which is 0.25 g for our products. For thermostabilized food items, the max allowable egress is 3% of the product mass, which is 4.8 g for our products.

$$\mathrm{WVTR_{atm}} = \frac{\mathrm{M_{H_2O}}}{\mathrm{A} * \mathrm{T}} \tag{3}$$

When films are converted into pouches, their transmission rates tend to increase because of abuse from processing and other factors. Therefore, the rates in the following sections are only a guideline and are the bare minimum when evaluating materials. The rates were calculated using assumptions that the atmosphere on each vehicle will be 20.9% O_2, 73°F, and 50% RH (relative humidity). Also, they are configured to be comparable with the standard testing parameters of 100% O_2 at 73°F for OTR and 100% RH at 100°F for WVTR. This was done by multiplying the required transmission rate by 100% O_2 divided by 20.9% O_2 for OTR and 100% RH divided by 50% RH for WVTR.

LUNAR SORTIE

Lunar sortie missions are nominally designed for 7 days plus travel (8 days) plus a preflight positioning time of 180 days for food required for transit. The total mission time then equates to 195 days, which is about 6 months.

Oxygen Transmission Rate. The oxygen transmission rate for packaging materials used for freeze-dried and natural form food items shall not exceed $0.0925\,\mathrm{cc/m^2 \cdot day}$ or $0.0060\,\mathrm{cc/100\,in.^2 \cdot day}$. For thermostabilized items this value shall not exceed $0.0710\,\mathrm{cc/m^2 \cdot day}$ or $0.0046\,\mathrm{cc/100\,in.^2 \cdot day}$.

Water Vapor Transmission Rate. The water vapor transmission rate for packaging materials used for freeze-dried and natural form food items shall not exceed $0.1105\,\mathrm{g/m^2 \cdot day}$ or $0.0072\,\mathrm{g/100\,in.^2 \cdot day}$. For thermostabilized items this value shall not exceed $1.2721\,\mathrm{g/m^2 \cdot day}$ or $0.0820\,\mathrm{g/100\,in.^2 \cdot day}$.

ISS AND LUNAR OUTPOST

ISS and lunar outpost missions are nominally designed for 180 days plus travel (8 days), plus a preflight positioning time of 180 days. The total mission time then equates to 368 days, which is about 1 year.

Oxygen Transmission Rate. The oxygen transmission rate for packaging materials used for freeze-dried and natural form food items shall not exceed $0.0490\,\mathrm{cc/m^2 \cdot day}$ or $0.0032\,\mathrm{cc/100\,in.^2 \cdot day}$. For thermostabilized items this value shall not exceed $0.0376\,\mathrm{cc/m^2 \cdot day}$ or $0.0024\,\mathrm{cc/100\,in.^2 \cdot day}$.

Water Vapor Transmission Rate. The water vapor transmission rate for packaging materials used for freeze-dried and natural form food items shall not exceed $0.0586\,\mathrm{g/m^2 \cdot day}$ or $0.0038\,\mathrm{g/100\,in.^2 \cdot day}$. For thermostabilized items, this value shall not exceed $0.6741\,\mathrm{g/m^2 \cdot day}$ or $0.0434\,\mathrm{g/100\,in.^2 \cdot day}$.

MARS EXPLORATION

Mars exploration missions are designed nominally for 540 days plus travel (360 days), plus a preflight positioning time of 180 days. The total mission time then equates to 1080 days, which is about 3 years.

Oxygen Transmission Rate. The oxygen transmission rate for packaging materials used for freeze-dried and natural form food items shall not exceed $0.0167\,\mathrm{cc/m^2 \cdot day}$ or $0.0011\,\mathrm{cc/100\,in.^2 \cdot day}$. For thermostabilized items, this value shall not exceed $0.0128\,\mathrm{cc/m^2 \cdot day}$ or $0.0008\,\mathrm{cc/100\,in.^2 \cdot day}$.

Water Vapor Transmission Rate. The water vapor transmission rate for packaging materials used for freeze-dried and natural form food items shall not exceed $0.0200\,\mathrm{g/m^2 \cdot day}$ or $0.0012\,\mathrm{g/100\,in.^2 \cdot day}$. For thermostabilized items, this value shall not exceed $0.2297\,\mathrm{g/m^2 \cdot day}$ or $0.0148\,\mathrm{g/100\,in.^2 \cdot day}$.

REFERENCES

1. E. A. Nebesky, G. L. Schulz, and F. J. Rubinate, “Packaging for Space Flights,” *Activities Report*, **17**, 32–36 (1965).
2. A. D. Catterson, E. P. McCutcheon, H. A. Minners, and R. A. Pollard, “Aeromedical Observations, in Mercury Project Summary Including Results of the Fourth Manned Orbital Flight,” NASA SP-45, 315 (1963).
3. M. V. Klicka and M. C. Smith, “Food for U.S. Manned Space Flight,” Technical Report NATICK/TR-82/019.
4. M. C. Smith, R. M. Rapp, C. S. Huber, P. C. Rambaut, and N. D. Heidelbaugh, “Apollo Experience Report—Food Systems,” Technical Report NASA TN D-7720 (1974).
5. NASA’s Exploration Systems Architecture Study, Final Report, 2005. NASA-TM-2005-214062. http://www.nasa.gov/mission_pages/exploration/news/ESAS_report.html.
6. J. M. Jay, *Modern Food Microbiology*, 4th ed., Chapman and Hall, New York, 1992, p. 34.
7. R. A. Armstrong, “Effects of Polymer Structure on Gas Barrier of Ethylene Vinyl Alcohol (EVOH) and Considerations for Package Development,” TAPPI 2002 PLACE Conference (2002).

FORENSIC PACKAGING

JACK L. ROSETTE
Forensic Packaging Concepts,
Inc., Del Rio, Tennessee

Forensic packaging is a legal term describing the science of determining the cause of package function as intended. Most people think of forensics as being associated with criminal investigation (especially homicide), when in reality there are many areas of forensic specialization. Forensic medicine involves the cause of disease, forensic pathology is related to the cause of death, forensic psychiatry seeks the cause of mental disorders, forensic engineering is used to determine the cause of accidents such as train or automobile, forensic accounting identifies procedures used to hide illegal accounting such as embezzlement, and forensics in law enforcement refers to scientific physical evidence such as latent prints, ballistics, handwriting, fiber analysis, and similar sciences.

Walter Stern, a packaging consultant in Wilmette, Illinois, was the first person known to use the term *forensics* in defining the science of determining the cause of a package to fail to function that resulted in injury. Forensic Packaging was recognized as a forensic science by the American Academy of Forensic Sciences in 1997.

Determining the cause of package failure may be as simple as discovering that liners are missing from a closure or as complicated as duplicating actual environmental factors such as (a) temperature and humidity present during the time the package was in transport and storage and (b) measuring the effect the conditions have on the subject package. Determining the cause of package failure may fall on the shoulders of any person involved in the sale, manufacture, or use of the package. If the salesperson is unable to readily identify the cause, production may be asked to determine the cause. If production determines that the package was produced in spec (specification), the packaging engineer may analyze whether the spec was sufficient to meet the objectives of the package under the changing conditions. If the engineer is unable to determine the cause, a specialist in forensic packaging may be needed to identify all factors related to the package and conduct extensive tests to determine the cause and recommend solutions to the problem.

The concepts of forensic packaging are most useful in identifying weaknesses in the package design, so that a better package or component can be made and the possibility of package failure can be reduced. Improvements resulting from proper application of forensic packaging concepts are not limited to materials or designs but may also involve manufacturing processes.

The science of forensic packaging requires an objective analytical process, where the results can be replicated by others using the same procedure. Many of the procedures used are found in ASTM 15.06, such as vibration, torque retention, and drop tests. Others may have been developed by various manufacturers, packaging schools, or independent laboratories. The source of the procedure is not as important as its relationship to the problem, reliability of its results, and ability to be replicated by others.

Many improvements in packaging have been the result of identifying the cause of a package failure such as new media for corrugated cartons to increase stacking strength, easier-to-open child-resistant closures, improved lettering on labels, and better barrier properties in films. Identifying and correcting any weakness in a package before the package fails results in savings in tooling, fewer claims of defective products, higher customer satisfaction, and improved profits.

In today’s litigious atmosphere, forensic packaging becomes most useful in legal actions. The science of forensic packaging, when properly applied and explained, can be used to objectively explain the process used in developing a package so that it will function as intended, that any weaknesses known would not affect package performance, or that the cause of package failure was not foreseeable and reasonable for the package to encounter. It is reasonable to expect that the package would survive transport and storage in the high temperatures of the summer, but is it reasonable to expect it to withstand abuse by the consumer? The level of abuse the package would withstand should be determined by testing, including normal use and extreme abuse.

In some cases the package was designed with several safeguards, functioned as intended, but the consumer ignored indications of prior opening and died after consuming an adulterated product that resulted in severe injury or toxicity. Should the company have been liable for the failure of the consumer, when the physical evidence of the package remains indicated that it functioned properly?

A qualified forensic packaging consultant or scientist can explain in either technical or lay terms the cause of and solutions to any problem so that the problem can be understood. The results of all tests performed by the consultant or in-house scientist should be verifiable and replicable by others. While the consultant's findings may be based on experience, results based on objective scientific reasoning may carry more weight. The consultant should be capable of developing evidence for use in litigation and testifying in court if necessary.

In forensic engineering, it is possible to determine whether a turn signal was on at the time of impact even though the light is broken when examined. In forensic packaging, similar results can be obtained by examining the remaining components, duplicating environmental and physical conditions, and conducting tests related to the function of the package. Through the use of objective test-duplicating the package components and conditions, it is possible to determine the probability that a package would or would not leak under similar circumstances. The same analysis combined with variations of the package can identify the cause of the package failure.

What is the value of forensic packaging to management? Proper use of the principles of forensic packaging can prevent the use of manufacture of a package that is likely to fail to function and thereby result in injury to the consumer. It can also ensure that the package is the most effective for the specific application, provided that accurate information on intended use and environmental conditions are known.

BIBLIOGRAPHY

General References

Books

J. L. Rosette, *Improving Tamper-Evident Packaging*, Technomic Publishing, Lancaster, PA, 1992.

J. L. Rosette, *Product Tampering Detection*, Forensic Packaging Concepts, Inc., Atlanta, 1993.

W. Stern, *Packaging Forensics; Package Failure in the Courts*, Lawyers & Judges Publishing Co., 2000.

Publications

American Society for Testing and Materials (ASTM) 15.06

Food & Drug Packaging, published monthly.

Articles and Technical Papers

"Package Failure and the Courts," W. Stern presentation to Packaging Institute/International, Lisle, IL, September 1986.

J. Sneden, H. Lockhart, and M. Richmond, "Tamper-Resistant Packaging," Michigan State University, 1983.

FORM/FILL/SEAL, HORIZONTAL

R. F. Bardsley
Bard Associates

A variety of packages can be made on horizontal form/fill/seal equipment. This article deals primarily with pouch making, but similar concepts are applied to thermoform/fill/seal (see the Thermoform/fill/seal article) and bag-in-box packages (see the Bag-in-box, dry product article). Pouch styles include the following: three-sided fin seal, four-sided fin seal, single gusset, double gusset, pillow pouch (lap seal/fin seal), and shaped seal. The package is usually made from rolls of film (see the Films, plastic article) or other "webs" (see the Multilayer flexible packaging article). The sides are normally heat-sealed (see the Sealing, heat article), but other methods such as ultrasonic, laser, or radiofrequency welding can be used to meet specific requirements.

Filling can be done in many ways, depending on the characteristics of the product. Fillers include liquid fillers (see the Filling machinery, still liquid article), paste fillers, augers, pocket fillers, vibratory, orifice-type, and gravimetric units (see the Filling machinery, dry product article). Accessories can be provided with most form/fill/seal equipment to provide registration (feed-to-the-mark or stretch hardware); web splicing ("flying splice" automatic or manual equipment); in-line printing (see the Printing article); coding (noncontact, hot-leaf stamping, or printing units) (see the Code marking and imprinting article); embossing; perforating; notching; vacuum or inert-gas packaging (see the Controlled atmosphere packaging article); aseptic packaging (see the Aseptic packaging article); tear string; cartoning or bagging.

Some machines are small and relatively portable; others are massive and fixed. Some versatile machines can be readily changed over within limits. Other equipment is dedicated to a given size, and any change requires extensive and costly modifications. The cost of equipment varies widely depending on the output required and the extent of the system purchased, and on accessories specified and design requirements (e.g., sanitary criteria and environmental considerations).

This discussion covers pouch, thermoform, and horizontal bag/box machinery according to the outline shown in Table 1. The equipment is classified by type and functional sequence and is further subdivided by design parameters. These are all horizontal form/fill/seal machines, even though the pouch may be horizontal or

Table 1. Horizontal Form/Fill/Seal Equipment

- Pouch form/cut/fill/seal, pouch vertical
  - In-line equipment
    - Single-lane, intermittent, and continuous motion
  - Rotary equipment
    - Single-lane, intermittent motion
- Pouch form/fill/seal/cut, pouch vertical
  - Single-lane, continuous motion
  - Multilane, continuous motion
  - Single-lane, intermittent motion
- Pouch form/fill/seal/cut, pouch horizontal
  - Single-lane, intermittent, and continuous motion
  - Multilane, intermittent, and continuous motion
- Thermoform/fill/seal equipment
  - Multilane, intermittent, and continuous motion
- Horizontal form/fill/seal bag-in-box equipment
  - Single-lane, intermittent motion

vertical (see the Form/fill/seal, vertical article). It would be impossible to mention all the machinery available. Representative equipment is mentioned for clarity, not as endorsement.

POUCH FORM/CUT/FILL/SEAL, POUCH VERTICAL

Inline, Single-Lane, Intermittent Motion. The basic "work-horse" of the pouch machinery group is the single-lane, in-line vertical pouch form/cut/fill/seal intermittent motion machine. It requires some web stiffness to transfer from the cutoff knife to the bag clamps. Size changes, within limits, can be accomplished by adjustments to the machine. Its flexibility includes the ability to handle a wide variety of pouch materials, including most self-supported heat-sealable materials like polyesters, polyethylenes, foils, cellophanes, and paper. Liquids, creams, pastes, granular materials, pills, tablets, and small hard goods, or a combination of these, may be packaged on this type of equipment. Fillers include piston fillers; auger fillers; and vibratory, volumetric, gravimetric, count, and timed-cutoff units. A combination of fillers can be used to permit formulation in the pouch. Gassing and sterilization systems can be provided. The major factor in the selection of this equipment is versatility.

Bartelt Machinery Division of Rexham builds equipment of this type (see Figure 1). Pouch styles that can be produced on this equipment are three- and four-sided fin seal, bottom gusset pouches for greater volume, wrap-around pouches, multiple compartment pouches, and die-cut pouches as well as some combinations of these. Bartelt has been a pioneer in the production of retort pouches, and they can supply automated retort systems from rollstock through cartoning.

Costs for equipment of this type vary widely. For instance, N and W Packaging Systems of Kansas City, MO makes a relatively simple unit that produces 55 packages per minute. Bartelt makes complete systems that take packages from several machines with an "on-demand" feature and cartons them on high-speed equipment.

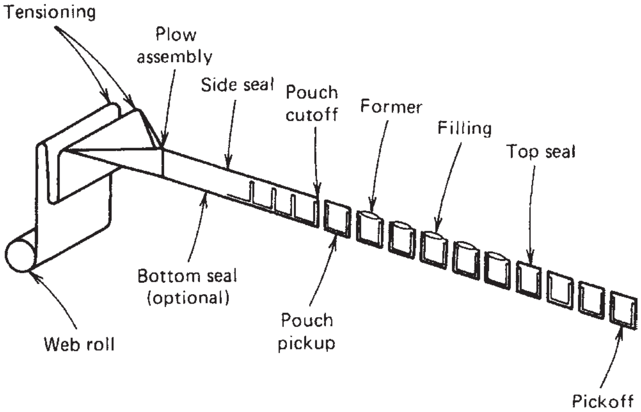

Figure 1. Material-flow diagram of typical Bartelt intermittent bottom horizontal form/fill/seal/machine. Filling of individual pouches allows maximum versatility for multiple component fills and easy pouch-size change. The machine primarily uses supported paper, foil, or laminated film structures.

Hassia, a division of IWK, Germany, builds a flat pouch unit that operates at rates of up to 120 packages per minute. Another German firm that produces inline intermittent-motion pouch equipment is Hamac-Hoeller, a division of the Bosch Packaging Group.

Inline, Single-Lane, Continuous Motion. The sequence of form/cut/fill/seal on a continuous-motion machine entails running a cut pouch into clips attached to a continuously moving chain. Filling is usually accomplished by funnels that move with the pouch to allow time for the fill cycle. Sealing is done either with moving heat sealing bars (see the Sealing, heat article) or band or contact heaters with squeeze rolls at the discharge of the heater elements. Continuous-motion equipment is more complex and expensive than intermittent-motion machines. They are relatively fixed in the pouch size and do not provide the flexibility of intermittent units, but they operate at significantly higher rates.

Delamere and Williams, which is a subsidiary of Pneumatic Scale Corporation, builds a Packetron Pouch Maker that will run at speeds of $\leqslant 500$ pouches per minute. This machine can package products like instant cocoa mix, oatmeal, coffee, seasonings, dairy mix, powdered beverages, and most free-flowing food products. Sealing can be accomplished on three or four sides. A gusseted bottom can be supplied to provide an increased pouch volume.

Rotary Single-Lane, Intermittent Motion. In this design concept, the pouch sides are sealed, then the pouch is cut and transferred to an indexing wheel. Pouch opening, filling, and top sealing take place at various stations around the circumference of the indexing assembly.

Hamac-Hoeller manufactures a unit of this type called the BMR-100. This machine can run up to 120 pouches per minute and produce three- and four-sided fin seals, bottom gusset, standup, and shaped seal pouches. The BMR-200 machine handles two pouches at a time. This unit has a top rate of 200 packages per minute and makes the same style pouches as the BMR-100 plus a twin pouch with a central seal. These machines can be fitted with various type fillers and auxiliaries to meet specific needs.

The Wrap-Ade Machine Company of Clifton, NJ, makes a more economical model of a single-lane rotary pouch machine. This unit produces pouches at a rate of 15–60 pouches per minute. It is a 12-station indexing system with seven possible loading stations.

A somewhat related system is available from Jenco (Germany). This machinery produces a standup bag of relatively large volume. The system can be provided with gas flushing, postpasteurization, or sterilization. Jenco offers complete systems from bagmaking to cartoning. System rates are up to 300 bags per minute.

The machines described above produce relatively small pouches. Horizontal form/fill/seal intermittent motion equipment to make and fill large bags is described below.

POUCH FORM/FILL/SEAL/CUT, POUCH VERTICAL

This area of pouchmaking has advanced significantly. This concept takes the web continuously from a roll, runs it over a forming plough, makes the side seals on a rotary drum (and bottom seal if required), then forms and fills the pouch while it moves around a rotary filling hopper. The top of the web is stretched, and the top seal is usually accomplished by running the web through contact heaters and squeeze rolls. A rotary knife is used to accomplish the pouch cutoff. This type of machine can produce packages at high rates, up to 1300 packages per minute on a single-lane machine. It is an inflexible system and is normally dedicated to one size.

Single-Lane, Continuous Motion. R. A. Jones & Co., Inc., Cincinnati, OH, makes a machine of this type called a Pouch King (see Figure 2). A Japanese firm, Showa Boeki Company Ltd., makes a slower unit called the Toyo type R-10.

The Jones unit was originally developed by the Cloud Machinery Company of Chicago, IL for use on sugar pouches with a paper–poly film (see the Multilayer flexible packaging article). The current capability of the equipment has been greatly expanded. The machine runs a wide range of sizes and flexible heat-sealable structures. These include glassine, cellophane, foil, polypropylene film, and other materials with a variety of sealant materials.

The original machine could fill only relatively small product volumes relative to pouch size, but Jones has developed a system called the “tucked-up-bottom” that holds a significantly larger product volume.

Various types of volumetric fillers that handle free-flowing products can be used on this equipment, including augers, orifice metering, vibratory, and pocket fillers.

Jones now has six models that run a wide range of products including salt, pepper, sugar, beverage mixes, instant coffee, roasted coffee, cocoa mix, and many other free-flowing products. The output is 750–1300 packages per minute.

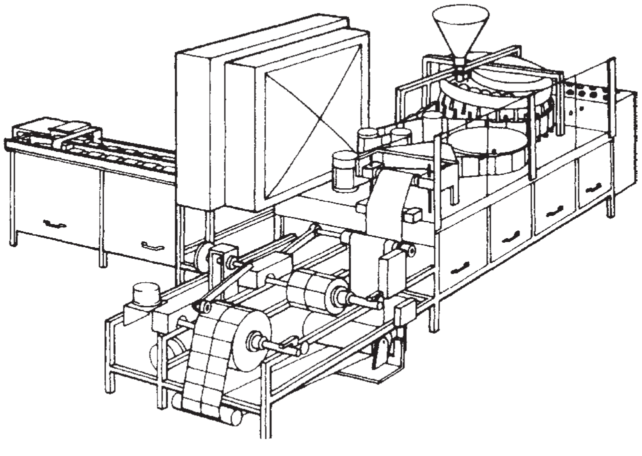

Figure 2. High-speed (700–1200 pouches per minute)—horizontal/fill/seal machine is all-rotary motion to provide long filling and sealing time. Pouches are automatically collated in the count and pattern required. (Courtesy of R. A. Jones & Co., Inc.)

Multilane Continuous Motion. An example in this category is the Matthews Industries (Decature, AL) “Ropak” machine. This equipment was also originally designed to run sugar pouches at rates up to 2000 packages/min. This rate is obtained by running two lanes at 1000 packages/min per lane. Previously, the only structure run on this unit was a paper-poly combination, but a paper—poly—foil—poly web is now being successfully packaged. Machines are currently running sugar, pepper, and instant coffee. Most of the product is bulk packed in drums or cases for institutional use. The machine is equipped with a predetermined counter-and-swing spout for bulk packing by count.

Single-Lane, Intermittent Motion. Simplicity, economics, versatility, and space saving were the criteria for this approach to form/fill/seal pouches. Semirigid packaging material is drawn from rollstock across a vertically mounted tension control. It then passes over an adjustable guide roller into a horizontal and flat position. At this point, the packaging material is folded in half vertically by passing through two round guide bars. In its horizontal direction of travel, the package material passes the bottom seal station (not required for a three-sided seal pouch). A pouch-opening device separates the folded packaging material for entry of the filling funnels before the side seals are completed. After the product is filled, the packaging material passes the top sealing station, followed by the pouch-cutting device. The final station is the packaging material transport station. The machine is adjustable to a maximum pouch of $5\frac{1}{8}$ in. × $5\frac{1}{8}$ in. (130 mm × 130 mm) at output speeds of ≤ 120 pouches/min (240 for duplex operations). The machine is manufactured by Kloeckner Wolkogon, a division of Otto Haensel (Germany).

POUCH FORM/FILL/SEAL/CUT, POUCH HORIZONTAL

In this wrapper-type equipment, the product is fed horizontally into a web that is wrapped around it and sealed. The product can be fed onto the moving web or the web can be formed around the product being carried on an indexing conveyor. The web is longitudinally sealed to form a tube around the product and the ends are sealed and cut off. The machinery is normally single lane, but dual lanes can be run on some equipment. Machines are available that use automatic product feed, manual product feed, run registered web, and they can be equipped for inert gas packaging. A wide range of films and sizes can be run on this equipment. Products such as cookies, candy bars, cheese, and other rigid-type products can be packaged. The pouch is basically a pillow pouch style with a lap- or fin-longitudinal seal. Gussets can be added to handle increased product volumes. Four-sided fin-seal packages can also be produced on this equipment. Machinery can be supplied that operates on either an intermittent or a continuous basis. Speeds of $\leqslant 300$ packages per minute are available. The equipment is relatively flexible and change overs are normally made by adjustments. An interesting innovation offered by Weldotron Corporation on its wrapper is a computer-controlled changeover system. Simply by pressing a button, the machine will adjust itself to any one of six preset sizes. This system was developed by Omori Machine Co. of Tokyo and is distributed in the United States by Weldotron's OMC Packaging Division. Machinery of this type is supplied by Hayssen Package Machinery, Sig, Bosch, Doboy and Oliver, to name a few. Many of these companies specilize in wrapping a given type of product.

Another category of horizontal form/fill/seal equipment is the pouch strip-packaging unit. This machine is basically used to package low-profile products such as flat candy bars, tablets, hardware, medical, and novelty items. The machinery can run two different webs and can run multiple rows of the same or different products.

THERMOFORM/FILL/SEAL EQUIPMENT

Thermoform equipment takes the horizontal-packaging concept further. In this machine concept, a thermoplastic web is heated and formed. The cavity is filled, lidded, and cut from the web. In some machines, a pressure-forming die can be substituted for the heat-form station to form a soft aluminum tray (see the Thermoform/fill/seal article).

A wide variety of packages can be made on intermittent and continuous motion machines of this type. Liquids, solid foods, pharmaceuticals, medical devices, hardware, and beauty aids can all be packaged on thermoform machines. Packages can range from small blisterpacks to deep drawn cups. The product can be gas, vacuum, or aseptically packaged. Films are available today that provide excellent forming characteristics and barrier protection for sensitive food products.

A wide range of thermoforming machines is available. The method of transporting the web through the machine depends on the characteristics of the package and product requirements. There are die machines where the film is formed into a die and the die train moves through the machine, supporting the web at every station. By far the most prevalent is the dieless clip machine where the film is carried on its sides by means of clips. Some machines do not use clips but rely on the strength of the web to pull the packages through the machine. The film is heated, prior to forming, by contact or radiant heaters, then formed at the same station or indexed to a separate forming station. Accessories for film forming such as plug or pressure assists can be supplied to obtain deep draws with a uniform wall thickness.

HORIZONTAL BAG-IN-BOX FORM/FILL/SEAL EQUIPMENT

There are several types of equipment that produce this type of package. One is a system that uses a rotary indexing mandrel to form the inner and outer container. The inner container is usually a flexible film with barrier requirements to meet the needs of the product. The outer packaging material is usually for package appearance or structural requirements and can be either a printed web or a box. Another system forms the box inline with the rest of the system, then the inner liner is formed and inserted in the box and the container is filled. A variation on this is that the container is filled while the inner liner is being inserted in the box (see the Bag-in-box, dry product article).

Some of the major manufacturers of this type of equipment are Pneumatic Scale Corp., Hesser, and Sig Industrial Company. Only Sig and Hesser provide a vacuum system. They also provide a package with a valve system that will allow a product such as coffee to outgas without causing the package to rupture or balloon (see the Vacuum coffee packaging article).

Hesser also makes a system that produces a container similar to a composite can. This machine takes a laminate from rollstock and forms a rectangular body. It then attaches one end, fills the container, and seals a lid to it. This equipment has the capability to make an aseptic package.

Horizontal form/fill/seal is an extremely dynamic segment of the packaging industry; materials and equipment are continually improving and presenting new opportunities. New coextruded structures offer barrier and machining possibilities that are expanding the range of food products that can be packaged in flexible film (see the Coextrusions for flexible packaging article and the Coextrusions for semirigid packaging article). Aseptic packaging is another growth area that will add new dimensions to food packaging. In conjunction with the advance in these technologies are equipment developments that will provide a basis for expansion and cost reduction.

BIBLIOGRAPHY

R. F. Bardsley, "Form/Fill/Seal, Horizontal," in *The Wiley Encyclopedia of Packaging Technology*, 1st ed., Bard Associates, pp. 364–367.

General References

Packaging Encyclopedia and Yearbook 1985. Cahners Publishing, Boston, MA, 1985.

PMMI Packaging Machinery Directory, Annual, Packaging Machinery Manufacturers Institute, Washington, DC.

J. H. Briston, L. L. Katan, and G. Godwin. *Plastics Films*, Longman, New York, 1983.

F. A. Paine and H. Y. Paine, *A Handbook of Food Packaging*, Blackie and Son Ltd., Glasgow, 1983.

FORM/FILL/SEAL, VERTICAL

EDWIN HO
OSI Industries, Lisle,
Illinois

The term form/fill/seal means producing a bag or pouch from a flexible packaging material, inserting a measured amount of product, and closing the bag top. Two distinct principles are utilized for form/fill/seal packaging: horizontal (HFFS) (see Form/fill/seal, horizontal) and vertical (VFFS). Generally, the type of product dictates which machine category applies. This article deals specifically with VFFS equipment, which forms and fills vertically. It is used to produce single-service pouches for condiments, sugar, and so on, as well as bags for retail sale and institutional use. The range of products and sizes is very large.

PACKAGE STYLES

VFFS machines can make a number of different bag styles (see Figure 1):

- A pillow-style bag with conventional seals on the top and bottom and with a long (vertical) seal in the center of the back panel from top to bottom. The long seal can be a fin seal or a lap seal (see Figure 1a,b).
- A gusseted bag with tucks on both sides to make more space for more product and maintain the generally rectangular shape of the filled bag (see Figure 1c). This style is used inside folding cartons for cereal and other dry products (see Bag-in-box, dry product).
- A three- or four-sided seal package is similar to those made on HFFS machinery (see Figure 1d).
- A standup bag (flat-bottom, gabletop) of the type that used to be common for packaging coffee.
- Other special designs such as tetrahedrons, parallelograms, and chubs (see Chub packaging).

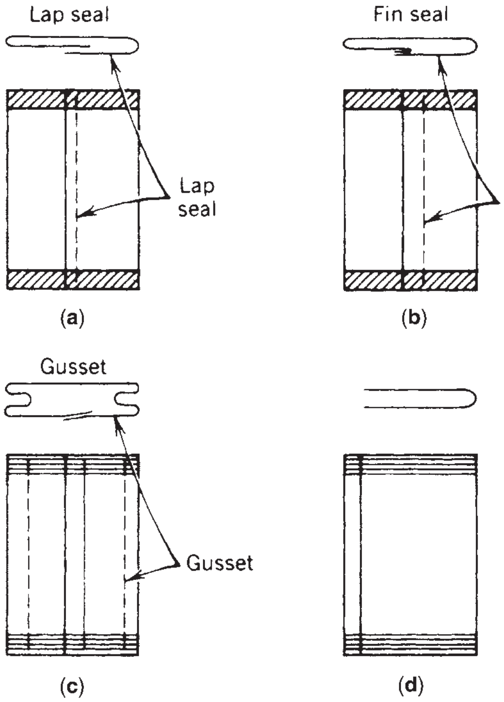

Figure 1. Selected package styles on VFFS machinery: (**a,b**) pillow style; (**c**) gusseted style; (**d**) three-sided seal.

A flat-bottom bag needs a relatively stiff material to hold its desired shape, but any type of machinable material can be used to make a pillow-style bag. Various options are available, such as a hole punch for peg-board display, header labels that are an extension of a standard top of a bag, carry handles for large consumer-type packages, and special sealing tools for hermetic seal integrity.

MATERIALS

Two types of packaging materials are suitable for VFFS: thermoplastic and “heat-sealable” materials. Polyethylenes (thermoplastics) require a special bag-sealing technique. Polyethylene films must be melted under controlled conditions until the areas to be attached to each other are fused. The operation is analogous to welding metals. Heat is applied to fuse the materials, and then a cooling process allows the seal to set. The sequence for making good seals requires careful control in order to get quality-seal integrity. Impulse sealing is used to seal thermoplastics on VFFS machines. A charge of electricity is put into a Nichrome wire that heats to a preestablished temperature (governed by material thickness) that will melt and fuse the materials. Since thermoplastics become sticky when melted, the Nichrome wire is covered by a Teflon (DuPont Company) sheath. The principle of impulse sealing does not require any specific tooling pressure.

Thermoplastic materials are generally used when a high degree of product protection is not required and low material cost is important. Polyethylene materials have some porosity (low gas barrier such as O_2, CO_2) and are not ideal for applications where hermetic seals are necessary for good shelf life, product freshness, gas flushing, and so on. They are used, for example, for frozen foods, chemicals, confectionary items, fertilizers, and peat moss.

The class of “heat-sealable” materials or “resistance seal films” includes paper and cellophane as well as some coextrusions and laminations. Because these materials do not melt at sealing temperatures, or do not melt at all, they require a heat-seal layer that provides a seal with the right combination of time, temperature, and pressure. The sealant layer can be on one or two sides of the web, depending on the desired package configuration (see Multilayer flexible packaging).

A fin seal (see Figure 1) can be made of materials with sealing properties on one side only, because the “heat-sealable” surface seals to itself. This seal is effective for powder products that need the seal to eliminate sifting. It is also a good seal if hermetic-seal integrity is important, as in gas-flush packaging. A lap seal uses slightly less material, but it requires sealing properties on both sides because the lap is made by sealing the inner ply of one edge to the outer ply of the other edge.

MACHINE OPERATION

A VFFS machine produces a flexible bag from flat rollstock. Material from a roll of a given web dimension is fed

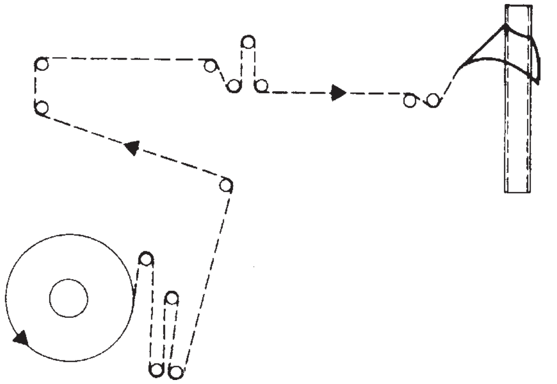

Figure 2. Typical film feed path through a vertical form/fill/seal machine.

through a series of rollers to a bag-forming collar/tube, where the finished bag is formed (see Figure 2). The roller arrangement maintains minimum tension and controls the material as it passes through the machine, preventing overfeed or whipping action. The higher the linear speed of the film, the more critical this handling capability becomes.

The bag-forming collar is a precision-engineered component that receives the film web from the rollers and changes the film travel from a flat plane and shapes it around a bag-forming tube. The design of the bag-forming collar can be engineered to get the optimum efficiency from metallized materials, heavy paper laminates, and so on. As the wrapping material moves down around the forming tube, the film is overlapped for either the fin or lap seal. At this point, with the material wrapped around the tube, the actual sealing functions start. The overlapped material moving down (vertically) along the bag-forming tube will be sealed. The packaging material/film advances a predetermined distance that equals the desired bag-length dimension. The bag length is the extent of the material hanging down from the bottom of the tube. The bag width is equal to half of the outside circumference dimension of the tube. After the film advance is completed, the bag-sealing and -filling completes the remainder of one cycle (film advance/fill/seal). There are two sets of tooling on the front of the machine. One of the sealing tools, the vertical (longitudinal or back) seal bar, is mounted adjacent to the face of the forming tube. Its function is to seal the fin- or lap-longitudinal seal which makes the package material into a tube.

The other set of tooling, the cross (end) seal, consists of a front and rear cross-sealing jaw that combines top- and bottom-sealing sections with a bag cutoff device in between. The top-sealing portion seals the bottom of an empty bag suspended down from the tube, and the bottom portion seals the top of a filled bag. The cutoff device, which can be a knife or a hot wire, operates during the jaw closing/sealing operation. This means that when the jaws open, the filled bag is released from the machine. All vertical bag machines utilize this principle to make a bag (see Figure 3).

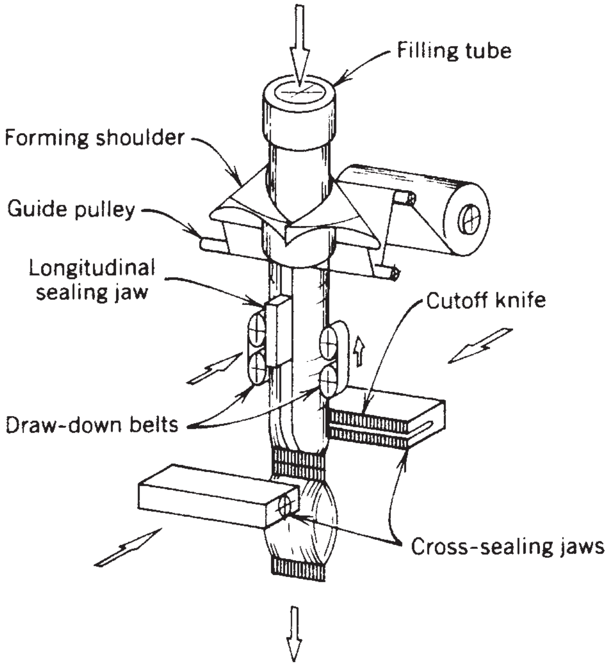

Figure 3. Typical VFFS configuration.

MACHINE VARIATIONS

Film Transport

Two distinct machine designs are used for transporting the packaging material/film through the machine. The traditional design clamps the material with the cross-seal jaws and advances the material by moving the cross-seal jaws down. This is called a “draw bar” (reciprocating up–down cross-seal jaws). The other is a drive-belt principle for film advance, which leaves the cross-seal bars in a fixed horizontal position with only open–close motion. The belt-drive film-advance principle has been shown to be the most versatile design for high–speed packaging and simplicity of operation, and a number of companies have converted to this principle.

Power

There are several approaches to providing power for material/film transport and the filling and sealing operations: all electromechanical; electromechanical/pneumatic; and electromechanical/pneumatic/vacuum.

The electromechanical vertical-bag machine incorporates a cam shaft with a series of cams to operate the various functions. The package material/film drive motion works off a motor/reducer/clutch/brake arrangement. The long-seal and the cross-seal tooling are operated by cams. This allows cycle-to-cycle repeatability of machine settings. This is a very basic principle that has fixed timing on all components and is generally accepted as a heavy-duty, low-maintenance design.

The most common VFFS design incorporates electromechanical power and pneumatics. This combination offers a manufacturing cost advantage in a highly competitive industry; but the tradeoff is the need to control air supplies carefully in order to keep the performance of the machine up to its top efficiency. The use of solenoid valves, pneumatic valves, flow controls, and air lines increases the maintenance requirements somewhat.

The electromechanical/pneumatic/vacuum principle is quite unique. The design is similar to the types utilizing air, with the addition of vacuum material/film transport belts. This principle locks the film to perforated drive belts by means of a vacuum pump. It works quite well, but generally imposes limitations on speed and minimum bag-width dimensions due to the design requirements for utilizing vacuum draw-down belts. Also, the vacuum pump adds another power requirement and noise factor.

BAG-FILLING FACTORS

The product being packaged is generally the limiting factor regarding production rate capabilities on any of the machine designs. Machine operation is affected by product characteristics such as dust, fines, and stickiness, as well as by piece size, piece weight, and product volume. Some products create a piston effect when dropped down inside a bag-forming tube, by pushing air down into the sealed end of the packaging material. This air must escape somewhere. There are various controls such as inner fill tubes and snorkel tubes, to release air pressure before the product drops down the tube. Some machine uses sponge attached to seal jaw to push air out prior to sealing the bag. The perforated or slitted film can be also used to form the bag so that the release of air through the holes helps to reduce bag puffiness prior to packing into corrugated case.

All of these factors affect the end result. Too often, cycle capabilities of the bag machine and of the product measuring system are calculated independently, without considering what happens when the product moves from the measuring system down through the tube and into the bag. Achievable production rates are based on the compatibility of the three components: bag machine, filler, and product(s). Users of VFFS machinery should supply complete information concerning the products to be packaged to the manufacturers of the equipment so that they can factually evaluate the achievable speed, weight accuracy, and efficiency capabilities.

PRODUCT FILLERS

There are several different choices of measuring/filling equipment: net weigh scales, auger fillers, volumetric fillers, counters, bucket elevators, and liquid fillers.

Net weight scales provide the most accurate means of measuring products for packaging. The invention and marketing of the multiple-head computer scale system in the past few decades has literally revolutionized the product-weighing industry. Package weight controls can be held to $\pm 1\,\mathrm{g}$ regardless of the size of the piece or particle being packaged.

Next in line for accuracy is the *auger filler*. This is applicable to products that are powdery in form and can be handled through a screw contained inside a tube. Most chemicals, baking products, and other powdery forms use an auger filler. The accuracy is dependent on bulk density control of the product throughout the augering system as well as the cycle repeatability of the chosen auger filler.

A *volumetric cup filler* fills by volume and is generally used for inexpensive products where high production rates are desirable and product overweight giveaway is unimportant. Counters (see Filling machinery, by count) apply to applications such as hardware, confectionary items, and other items that must be packaged by count. The counter(s) can be mounted directly over the bag machine, or they can work in conjunction with a bucket elevator.

The *bucket elevator* can be an intermediate between any of the other product fillers, but it should be utilized only where space restraints or other impractical reasons dictate needs. The shortest distance between two points is the rule of thumb on VFFS systems, so mounting the filler directly above the vertical bag machine is the best and should be first choice where applicable.

A few major VFFS equipment suppliers to the United States market are General Packaging Equipment Corporation Inc., Hayssen Manufacturing Company, Heat & Control Processing & Packaging Machinery Company, Ilapak Packaging Machinery Company, Package Machinery Company, Pneumatic Scale Barry-Wehmiller Company, Rovema Packaging Machines Inc., Triangle Package Machinery Company, and The Woodman Company.

BIBLIOGRAPHY

George “Rocky” Moyer, “Form/Fill/Seal, Vertical” in A. J. Brody and K. S. Marsh, eds., *The Wiley Encyclopedia of Packagiing Technology,* 2nd edition, Wiley, New York, 1997, pp. 468–470.

General References

E. Dierking, F. Klien Schmidt, and J. Hesse, *Packaging on Form, Fill, and Seal Flexible Bag Machines*, Massuers Wolff Walsorde, Germany (formerly FRG), 1975; discusses the importance of the bag-forming collar with regard to package quality as well as the relationship of material friction on machines utilizing the belt-drive principle.

“Extending the Shelf Life of Foodstuffs by Using the Aroma Perm Protective Gas Flushing System for Flexible Bags,” *Verpack. Rundesch.* **4,** 412–414 (1979).

The PMMI Packaging Machinery Directory, The Package Machinery Manufacturers Institute, Washington, DC, published annually.

Food Master, equipment, supplies & services, Food Engineering Network, Cahners, published annually.

GAS BARRIER PROPERTIES: EFFECTS OF SMALL LEAKS

KIT L. YAM
Department of Food Science,
Rutgers University,
New Brunswick, New Jersey

How much do small leaks affect the barrier properties of a package and the shelf life of the product it contains? This question is frequently asked by companies concerned with product quality and safety. Here are some real-life examples: A food company found significant weight gains in their packages containing a dry food product, despite the fact that the package was made with a high water barrier material; another company found that the shelf life of their food product was shortened by the onset of oxidative rancidity, although a high-barrier metallized film protected the food product; a researcher abandoned the data of a major experiment, because he found unexpected loss of volatile compounds from the packaged samples used in the experiment. In all of those cases, small leaks were found in the packages.

Small leaks sometimes occur in packages because of the mechanical abuses encountered during processing and transport and the limited mechanical resistance of the packages. The major concerns with the small leaks in packages that contain sensitive food or pharmaceutical products are (a) microbial penetration that can lead to health risk; and (b) disruption of the gas barrier property of the package, causing accelerated transfer of oxygen, water vapor, and flavors through packages, which can greatly shorten the shelf-life of the contained gas- or flavor-sensitive products.

The two types of small leaks commonly found in packages are pinholes and channel leaks (Figure 1). Pinholes are usually found in the package wall, and their depths are approximately equal to the package thickness. Pinholes may be caused by the package wall being accidentally punctured by a sharp object. Channel leaks are usually found in the seal area of the package, and their depths are equal or slightly longer than the seal width. Channel leaks may be caused by contaminants (such a small food particle) or wrinkles in the seal area. It is important to note that a channel leak typically has a longer depth than pinhole; the longer depth poses a higher resistance to microbial penetration and gas transport, and thus a pinhole is usually more detrimental than a channel leak of the same diameter. The diameters of pinholes and channel leaks typically range from 50 to 300 μm.

GAS TRANSPORT THROUGH LEAKS VERSUS PERMEATION

Besides going through leaks, a gas or vapor can also go through a polymeric package wall through the mechanism of permeation. As shown in Figure 2, gas permeation through a polymeric package wall involves a three-step process: adsorption of gas onto one surface of the package wall, diffusion of gas through the package wall, and desorption of gas from the other surface of the package wall. In comparison, the transport of a gas through a pinhole or channel leak (Figure 1) involves only the step of diffusion, and the diffusion of the gas is through the air column in the pinhole or channel leak, not through a solid package wall as in the case of gas permeation.

PREDICTIVE EQUATION

Equation (1) has been developed to estimate the effects of leaks on the barrier properties of packaging materials. The equation assumes a polymeric packaging material with a permeability P ($\mathrm{cm}^2\,\mathrm{s}^{-1}$). A new parameter "effective permeability," P_{eff} ($\mathrm{cm}^2\,\mathrm{s}^{-1}$), is introduced to include the additional effects of leaks in the material. Hence, P accounts for only gas permeation, whereas P_{eff} accounts for both gas permeation and gas transport through leaks.

$$\frac{P_{\mathrm{eff}}}{P} - 1 = \mathrm{B} \cdot \frac{n\delta^2}{\lambda + \kappa \cdot \delta} \tag{1}$$

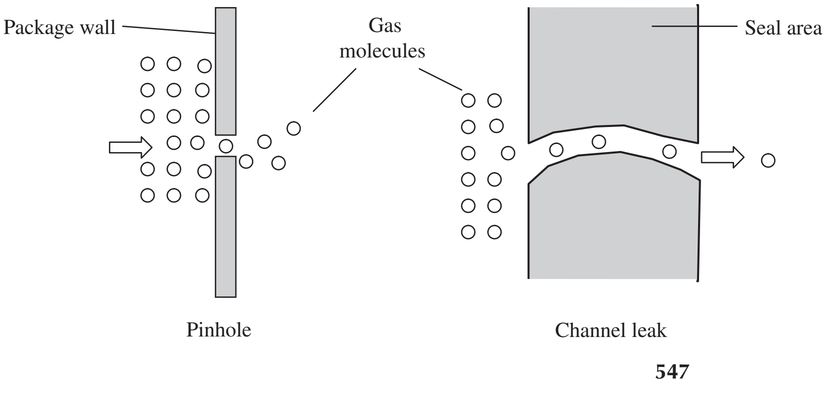

Figure 1. Transport mechanism of gases or vapors through pinhole and channel leak in package.

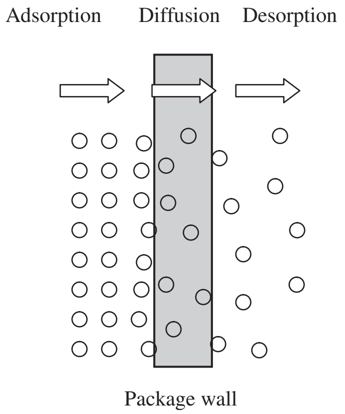

Figure 2. Mechanism of gas permeation.

where

$$B \equiv \frac{D_{1A}\pi \cdot L_P^2}{4A_P P} \tag{2}$$

and

D_{1A} = diffusion coefficient of gas 1 in air ($cm^2\,s^{-1}$)
L_l = length of leak (cm)
L_p = thickness of package (cm)
$\lambda = L_l/L_p$ dimensionless length of leak
$\delta = d/L_p$ dimensionless diameter of leak
κ = proportionality factor to account for end correction of diffusive path length (literature values ranges from 0.5 to 0.11)
A_P = surface area package wall (cm^2)
n = number of leaks

The derivation of this equation may be found in the original paper [1]. It is sufficient to mention here that the equation is based on Fick's law of diffusion, accounting for both the gas leakage across small leaks and the gas permeation across the package wall. The equation takes the effects of the leak into account using an effective permeability that depends on leak size, type of diffusing gas, type of packaging material, and gas status around at leak ends. The leaks are approximated as cylindrical pores in the model. At $\lambda = 1$, the leak is a pinhole; as λ increases, the leak is becoming a channel leak. At $\delta = 0$, there is no leak; as δ increases, the leak becomes bigger.

For a gas-sensitive food packaged with a permeable film, P_{eff}/P obtained from equation (1) may be used for correcting the shelf life estimation for errors caused by leakage:

$$\frac{t_{s,cor}}{t_s} = \frac{P}{P_{eff}} \tag{3}$$

where $t_{s,cor}$ is the shelf life corrected for leakage and t_s is the shelf life in the absence of leaks.

APPLICATIONS OF PREDICTIVE EQUATION

Three practical cases are shown below to illustrate the application of equation (1) to examine the significance of leaks on a gas-sensitive food packaged in low-density polyethylene (LDPE) or an aluminum film. P_{eff}/P is used to compare the barrier properties of packages with and without leaks. The term ($P_{eff}/P-1$) represents the effect of

Case 1: Effect of Leaks on Water Vapor and Oxygen Transport. This case compares the effect of leaks on water vapor transport and oxygen transport through LDPE at 25°C. An LDPE package with one leak ($n = 1$) was considered with a surface area A_P of 500 cm^2 and a thickness L_p of 25 μm. For water vapor transport, the permeability $P = 6.64 \times 10^{-7}\,cm^2\,s^{-1}$, when the relative humidities inside and outside the package are 0% and 90%, respectively, and diffusion coefficient $D_{1A} = 0.260\,cm^2\,s^{-1}$. For oxygen transport, $P = 2.39 \times 10^{-8}\,cm^2\,s^{-1}$ and $D_{1A} = 0.203\,cm^2\,s^{-1}$.

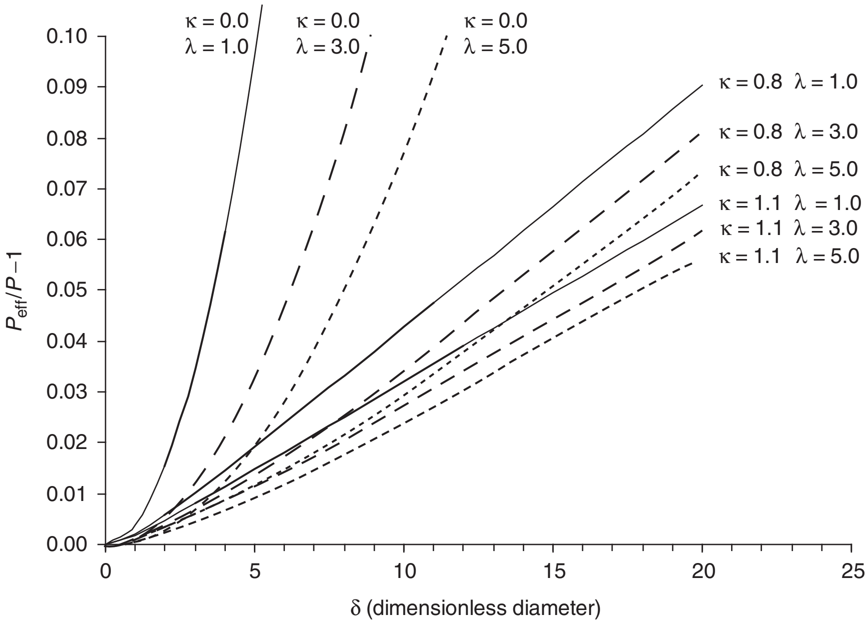

Figure 3. ($P_{eff}/P-1$) versus δ with κ and λ as parameters for water vapor transport through LDPE at 25°C. Simulations were conducted using equation (1) with $P = 6.64 \times 10^{-7}\,cm^2\,s^{-1}$, $D_{1A} = 0.260\,cm^2\,s^{-1}$, $A_P = 500\,cm^2$, $L_p = 25$ μm, and $n = 1$.

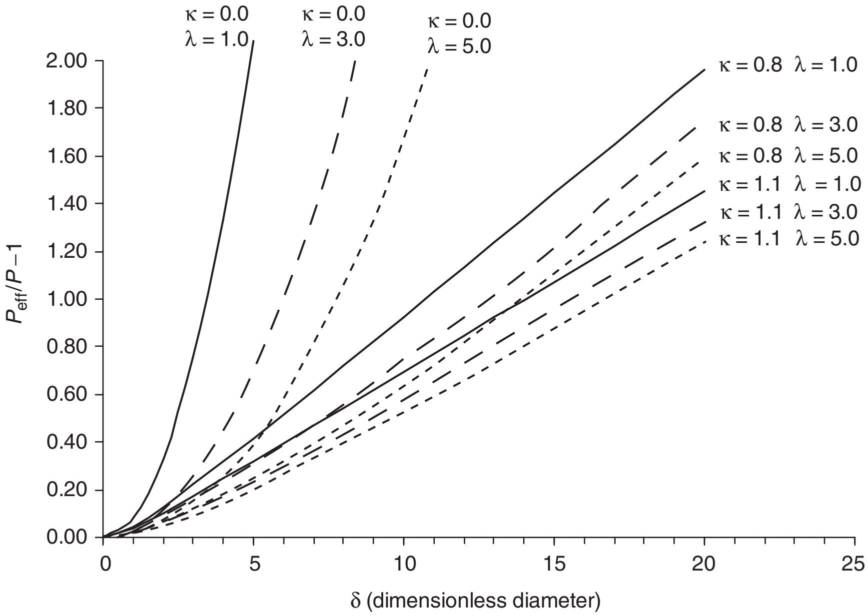

Figure 4. ($P_{eff}/P-1$) versus δ with κ and λ as parameters for oxygen transport through LDPE at 25°C. Simulations were conducted using equation (1) with $P = 2.39 \times 10^{-8}\,\text{cm}^2\,\text{s}^{-1}$ and $D_{1A} = 0.203\,\text{cm}^2\,\text{s}^{-1}$, $A_P = 500\,\text{cm}^2$, $L_p = 25\,\mu\text{m}$, and $n = 1$.

Figures 3, 4 show the plots of ($P_{eff}/P-1$) as a function of dimensionless diameter δ with κ and λ as parameters for water vapor transport and oxygen transport, respectively. In each figure, the range of δ is between 0 ($d = 0$) and 20 ($d = 500\,\mu$m). Three κ values were selected; zero for the case of no end correction, 0.8, and 1.1. At each κ value, three values (1.0, 3.0, and 5.0) for λ were considered. The leak is a pinhole when $\lambda = 1.0$ and becomes a longer channel leak as λ increases. In Figures 2 and 3, three bands of curves are observed; each band corresponds to a value of κ and the smaller variation within the curves of each band is caused by the different λ.

At any given κ and λ, the increase of ($P_{eff}/P-1$) with δ is steeper for oxygen (Figure 4) than for water vapor (Figure 3), which indicates that leaks have greater effects on oxygen transport than on water vapor transport. This observation can be explained by the fact that for LDPE the value of D_{1A}/P for oxygen is about 20 times larger than that for water vapor, which makes the dimensionless parameter B in Equation (1) about 20 times larger.

For an illustration of the effect of leaks on the shelf life of foods, a moisture-sensitive food stored at 25°C was considered, packaged with a LDPE film that had a surface area of $500\,\text{cm}^2$, a thickness of $25\,\mu$m, and one pinhole ($n = 1$ and $\lambda = 1$). The relative humidities inside and outside the package were assumed to be 0% and 90%, respectively. The calculations were carried out with $\kappa = 0.8$. For $d = 100\,\mu$m ($\delta = 4$), the calculated $P_{eff}/P = 1.015$, which indicates the pinhole increases the water vapor transport rate by 1.5%. For $d = 300\,\mu$m ($\delta = 12$), the calculated $P_{eff}/P = 1.052$, and the increase is 5.2%. The relative reductions in shelf life calculated using $100(1-P/P_{eff})$ were 1.5% for $d = 100\,\mu$m and 4.9% for $d = 300\,\mu$m. Under the given conditions, one pinhole does not seem to be important for water vapor transport. However, if the food is oxygen sensitive so that its shelf life depends on oxygen transport, even a single pinhole becomes a serious matter under the same conditions. For $d = 100$ and $300\,\mu$m, the calculated P_{eff}/P values were 1.318 and 2.133, and the calculated shelf life reductions were 24% and 53%, respectively.

Case 2: Effect of Leaks on High Gas Barrier Materials. An inspection of equations (1) and (2) reveals that ($P_{eff}/P-1$) is directly proportional to B and that B is inversely proportional to the permeability P. Therefore, the relative increase of the permeability caused by leaks ($P_{eff}/P-1$) is inversely proportional to the permeability P of the material. In other words, the better the gas barrier properties of the material, the more significant the relative increase of the permeability caused by leaks.

Aluminum is often considered as a gas-impermeable material. A thin aluminum layer is often laminated or metallized onto a plastic film for enhanced gas barrier protection. However, the thin layer of aluminum is susceptible to pinhole formation during the manufacturing process and handling. In the following analysis, such a gas-impermeable material is considered in which pinholes are the only means of oxygen transport. For a gas impermeable material, $P = 0$, therefore, the effective permeability becomes:

$$P_{eff} = \frac{D_{1A}\pi \cdot l_P^2}{4A_P} \frac{n\delta^2}{\lambda + \kappa \cdot \delta} \tag{4}$$

Using the equation, a plot of P_{eff} versus leak diameter d (Figure 5) was constructed at different values of n and λ for oxygen transport through leaks for the gas-impermeable material at 25°C. A package with a surface area A_P of $500\,\text{cm}^2$ and a thickness L_p of $25\,\mu$m was considered and the calculations were carried out with $\kappa = 0.8$. In the same graph, the permeability of LDPE to oxygen at 25°C ($P = 2.39 \times 10^{-8}\,\text{cm}^2\,\text{s}^{-1}$) is shown. It can be observed that even one pinhole ($n = 1$, $\lambda = 1$) with a diameter $d = 270\,\mu$m

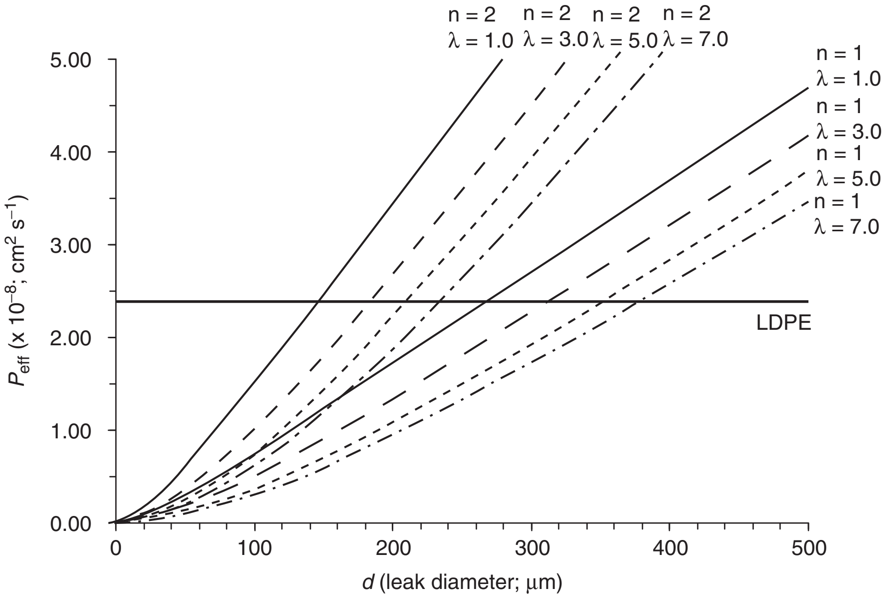

Figure 5. P_{eff} versus leak diameter d at different values of n and λ for oxygen transport through leaks for a gas-impermeable material at 25°C. Simulations were conducted using equation (4) with $A_P = 500$ cm^2, $L_p = 25\,\mu$m, and $\kappa = 0.8$.

can make the otherwise impermeable material more permeable than LDPE. Therefore, it is a waste of money to use expensive high-barrier materials if not enough attention is paid to ensure the package is leak free.

Case 3: Effect of Temperature on the Significance of Leaks. ($P_{eff}/P-1$) varies with temperature because of the temperature dependence of D_{1A} and P in the dimensionless parameter B (equation 2). This temperature effect is illustrated next by considering oxygen transport through LDPE at 25°C and at 35°C. A LDPE package with a surface area A_P of 500 cm^2, a thickness L_p of 25 μm, and one ($n = 1$) leak was considered. Calculations were carried out using equation (1) with $\kappa = 0.8$. At 25°C, we already had $P = 2.39 \times 10^{-8}$ cm^2 s^{-1} and $D_{1A} = 0.203$ cm^2 s^{-1}. The permeability of oxygen through LDPE at 35°C was calculated using the Arrhenius relationship with an activation energy of 10 kcal/mole. The diffusion coefficient of oxygen in air at 35°C was calculated using the Fuller–Schettler–Giddings correlation and the D_{1A} value at 25°C. Thus at 35°C, $P = 4.14 \times 10^{-8}$ cm^2 s^{-1} and $D_{1A} = 0.215$ cm^2 s^{-1}.

Calculations show that increasing the temperature from 25°C to 35°C, P almost doubled whereas D_{1A} increases by only 6%, which results in a decrease of B from 8.34×10^{-2} to 5.10×10^{-2}. These calculations indicate that the relative increase of the permeability caused by leaks ($P_{eff}/P-1$), that is the leak effect, becomes less significant as temperature increases, because the temperature dependence of P is larger than that of D_{1A}. This is illustrated in Figure 6, where the slope of the curves in the plot of ($P_{eff}/P-1$) versus leak diameter (d) is smaller at 35°C than at 25°C.

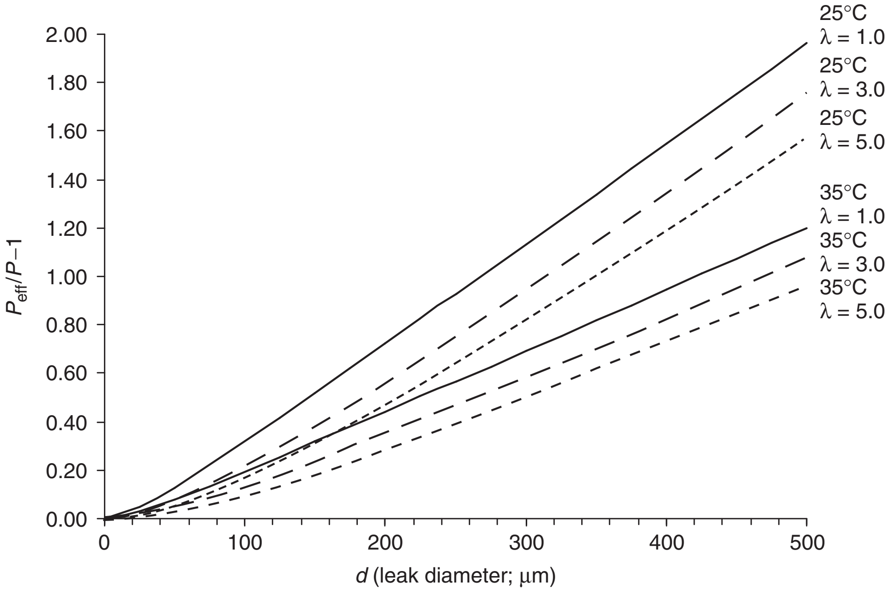

Figure 6. ($P_{eff}/P-1$) versus leak diameter d at various values of λ for oxygen transport through LDPE at 25°C and at 35°C. Simulations were conducted using equation (1) with $A_P = 500$ cm^2, $L_p = 25\,\mu$m, $n = 1$, and $\kappa = 0.8$. $P = 2.39 \times 10^{-8}$ cm^2 s^{-1} and $D_{1A} = 0.203$ cm^2 s^{-1} were used at 25°C and $P = 4.14 \times 10^{-8}$ cm^2 s^{-1} and $D_{1A} = 0.215$ cm^2 s^{-1} were used at 35°C.

BIBLIOGRAPHY

1. D. H. Chung, S. E. Papadakis, and K. L. Yam. "A Model to Evaluate Transport of Gas and Vapors through Leaks," *J. Packag. Technol. Sci.* **16**, 77–86 (2003).

GAS PERMEATION OF PACKAGING MATERIALS

KIT L. YAM
Department of Food Science,
Rutgers University, New
Brunswick, New Jersey

INTRODUCTION

The transport of gas or vapor through a food package can greatly influence the keeping quality of the packed food. Oxygen ingress into the package can cause oxidation in lipid foods (especially dehydrated meat, egg, cheese, as well as foods cooked in frying oil) that leads to off-flavors, loss of color, and reduction in nutrient value. Water vapor infiltrating the package can cause moisture gain leading to sogginess or microbial growth in food, while water vapor escaping from the package can cause moisture loss leading to undesirable textual changes in food. On the contrary, there are occasions when the transport of gases and vapors is desirable. In modified atmosphere packaging of fresh produce, the exchange of oxygen, carbon dioxide, and water vapor through the package is necessary to accommodate the respiration and transpiration of the still bioactive product and to maintain an optimum gas composition in the package. In packaging of freshly roasted coffee, degassing is necessary to prevent excessive pressure buildup since the product still emits carbon dioxide after packing.

There are two major mechanisms by which gas or vapor may be transported through the package—permeation and leak. Permeation involves the exchange of a gas or vapor (also known as permeant) through a plastic film or package wall. Leak involves the exchange of gas or vapor through pinholes or channel leaks, to be explained at the end of this article. Although permeation is the focus of this article, it is important to realize that leakers from defective packages are often more influential than permeation in determining the overall transmission rate (1).

Permeation and gas barrier are closely related terms. Permeation is inversely proportional to gas barrier; for example, a package which allows gas to permeate quickly is a package of low gas barrier. To protect foods that are oxygen- or moisture-sensitive, high-gas-barrier packages should be used to retard the rate of permeation.

This article is limited to permeation in polymeric packaging materials. It is important to mention that all packaging polymers are permeable to gas and vapor to various degrees. These polymers provide a wide range of permeability for different applications. Hence the study of permeation is important to ensure that adequate gas barrier protection is provided for plastic pouches, plastic containers, and other plastic packages. On the other hand, glass and metal packaging materials are not permeable and paper packaging materials (unless coated with barrier layer) are too permeable. Unlike polymers, these materials do not provide an opportunity for the designer to optimize the barrier property for various applications.

MECHANISM OF GAS TRANSPORT THROUGH PERMEATION

Figure 1 shows that permeation of a permeant through a polymer film (or a package wall) is driven by concentration gradient in the direction from high to low concentration. The mechanism of permeation consists of three sequential steps: adsorption of the permeant onto the high concentration side of the film surface, diffusion of the permeant across the film, and desorption of the permeant from the low concentration side of the film surface.

Diffusion is the movement of molecules from a region of high concentration to a region of low concentration as a result of intermingling of the molecules due to random thermal agitation. The diffusion of a permeant through in a polymer film may be described by Fick's First Law:

$$J = -D\frac{dc}{dx} \tag{1}$$

where J (mol cm^{-2} s^{-1}) is diffusion flux, D (cm^2 s^{-1}) is diffusion coefficient (also called diffusivity), c (mol cm^{-3}) is permeant concentration, and x (cm) is distance in the flow direction. Since the increase in concentration is customarily associated with the positive x direction, a negative sign is needed in equation (1) to denote that diffusion is in the negative x direction or toward a lower concentration.

Adsorption and desorption are related to the solution or sorption behavior of the permeant molecules in the polymer film, which is governed by the relative strengths of interactions between permeant/permeant, permeant/polymer, and polymer/polymer. The simplest or "ideal" sorption isotherm is expressed by Henry's Law:

$$c_s = S_p \tag{2}$$

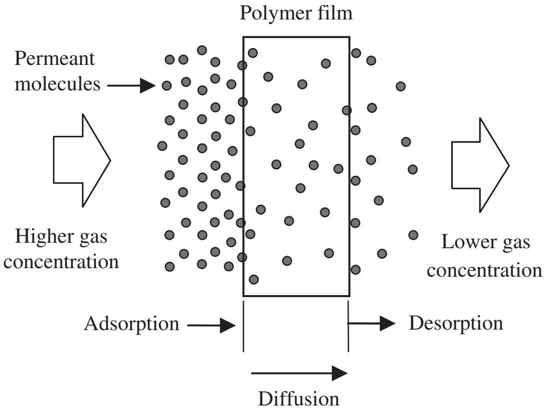

Figure 1. Permeation through a polymer film.

where c_s is permeant concentration at the solid-phase film surface (mol cm^{-3}), p (atm) is the partial pressure of the permeant, and S is solubility coefficient (mol cm^{-3} atm^{-1}). This provides a convenient means for estimating c_s once p and S are known.

Permeation Rate Equation and Its Physical Meaning

A useful equation to describe the gas permeation through a polymer film at steady state is the permeation rate equation:

$$Q = \frac{\bar{P}A}{L}\Delta p \tag{3}$$

where Q is permeation rate, A is film surface area, L is film thickness, and Δp is partial pressure difference of the permant between the two sides of the film. The parameter $\bar{P}$ is known as permeability, which is related to diffusion coefficient and solubility coefficient as follows:

$$\bar{P} = DS \tag{4}$$

The derivation of the permeation rate equation may be found elsewhere [2].

It is instructive to mention that gas permeation through a polymer film, like water through a pipe or electric current through a resistor, may be described by the empirical relationship:

$$\text{flow rate} = \frac{\text{driving force}}{\text{resistance}} \tag{5}$$

Comparing this relationship with equation (3) indicates that Q is the flow rate, the pressure difference Δp is the driving force for permeation, and

$$\text{resistance to permeation} = \frac{\mathrm{L}}{\bar{P}A} \tag{6}$$

Gas permeation through a film may be compared to water flow through a pipe connecting two water tanks of different heights (Figure 2a). Intuitively, the water flow rate is directly proportional to the difference between the water levels (Δh) and inversely proportional to the pipe resistance—this is consistent with equation (5). The pipe resistance increases with the length and friction factor of the pipe but decreases with its cross-sectional area. The similarities are as follows: Water flow rate is similar to gas permeation rate, water level difference between the two tanks (Δh) is similar to pressure difference across the film (Δp), cross-sectional area of pipe is similar to surface area of film, length of pipe is similar to thickness of film, and friction factor of pipe is similar to the inverse of permeability of film.

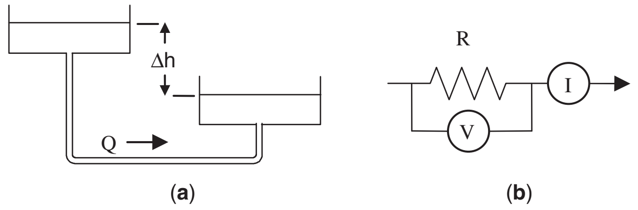

Figure 2. **(a)** Flow of water through a pipe. **(b)** Flow of electric current through a resistor.

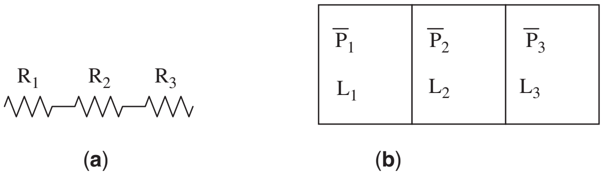

Figure 3. Resistance across **(a)** resistors in series and **(b)** a multilayer film.

Gas permeation is also similar to the flow of electric current through a resistor (Figure 2b). The relationship between electric current I, voltage V, and resistance R across a resistor is described by Ohm's Law:

$$I = \frac{V}{R} \tag{7}$$

which has the same form as equation (5). The total resistance is equal to the sum of individual resistances in series (Figure 3a):

$$R_T = R_1 + R_2 + R_3 + \cdots \tag{8}$$

Similarly, the total resistance in a multilayer film is equal to the sum of resistances in individual layers. Since the resistance to permeation for each layer is shown earlier to be $L/(\bar{P}A)$:

$$\frac{L_{\mathrm{T}}}{\bar{P}_{\mathrm{o}}A} = \frac{L_1}{\bar{P}_1 A} + \frac{L_2}{\bar{P}_2 A} + \frac{L_3}{\bar{P}_3 A} + \cdots \tag{9}$$

or

$$\frac{L_{\mathrm{T}}}{\bar{P}_{\mathrm{o}}} = \frac{L_1}{\bar{P}_1} + \frac{L_2}{\bar{P}_2} + \frac{L_3}{\bar{P}_3} + \cdots \tag{10}$$

where L_{T} is total thickness, $\bar{P}_{\mathrm{o}}$ is overall permeability, and the subscripts 1, 2, 3 refer to the individual layers in the film.

For example, consider a multilayer film constructed of 3 mil PP/0.5 mil PVDC/3 mil PP. Assume that the oxygen permeabilities for the PP (polypropylene) and PVDC (polyvinylidene chloride) layers are 150 and 1.2 (cm^3 · mil)/(100 in.^{2} · day · atm), respectively. The overall oxygen permeability $\bar{P}_{\mathrm{o}}$ of the film may be calculated using Equation (10):

$$\frac{3 + 0.5 + 3}{\bar{P}_o} = \frac{3}{150} + \frac{0.5}{1.2} + \frac{3}{150}$$

where the calculated $\bar{P}_o$ is 14.2 (cm^3 · mil)/(100 in.^{2} · day · atm).

PERMEABILITY OF FOOD PACKAGING POLYMERS

Table 1 shows typical ranges of permeability values for some common food packaging polymers. It can be seen that polymers offer a wide choice of barrier properties,

Table 1. Permeability Values of Polymers

Polymer	O_2 Permeability[a]	CO_2 Permeability[a]	Water Vapor Permeability[b]
Polyethylene (PE)			
Low density	300–600	1200–3000	1–2
High density	100–250	350–600	0.3–0.6
Polypropylene (PP)			
Unoriented	150–250	500–800	0.6–0.7
Oriented	100–160	300–540	0.2–0.5
Polystyrene (PS)	250–350	900–1050	7–10
Poly(ethylene terephthalate) (PET)	3–6	15–25	1–2
Poly(vinyl chloride) (PVC)			
Unplasticized	5–15	20–50	2–5
Plasticized[c]	50–1500	200–8000	15–40
Poly(vinylidene chloride) (PVDC)	0.1–2	0.2–0.5	0.02–0.6
Ethylene vinyl alcohol (EVOH)			1.5–8
0% RH	0.007–0.1	0.01–0.5	—
100% RH	0.2–3	4–10	—
Ionomer	300–450	—	1.5–2
Nylon 6	2–3	10–12	10–20
PC	180–300	—	10–15

[a] Unit in ($cm^3 \cdot mil$)/($100\,in.^2 \cdot day \cdot atm$) at 25°C.

[b] Unit in ($g \cdot mil$)/($100\,in.^2 \cdot day$) at 38°C, 90% RH.

[c] Values depend greatly on plasticizer content.

ranging from low oxygen barrier materials such as polyethylene (PE) to high oxygen barrier materials such as ethylene vinyl alcohol (EVOH). It is noted that polar polymer such as EVOH deteriorates in gas permeability under high relative humidity conditions.

Since the barrier protection against water vapor and oxygen is most important to food, it is useful to compare the oxygen permeability and water permeability together for selecting packaging material. Figure 4 presents the location of polymer material in a two-dimensional matrix of oxygen and water vapor permeabilities. For designing the packaging system for a certain food, its gas and moisture permeabilities should be closely related to the food's sensitivity to oxygen and moisture.

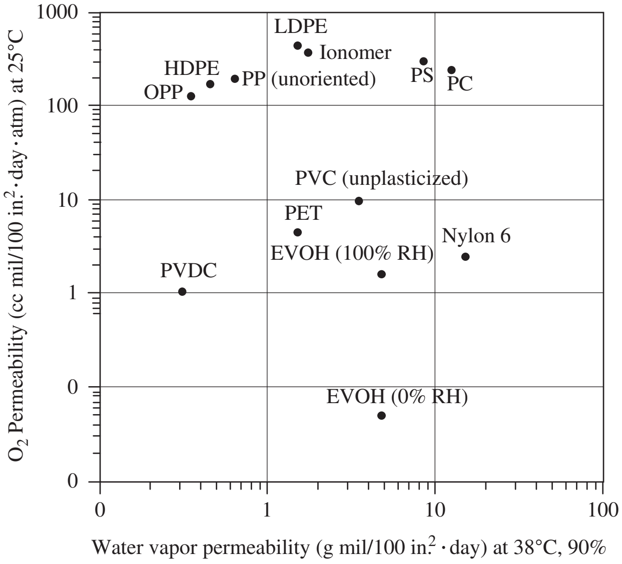

Figure 4. Oxygen permeability versus water vapor permeability.

FACTORS GOVERNING PERMEATION

The major factors governing permeability fall into three categories: nature of polymer matrix, nature of permeant, and ambient conditions. Understanding these factors is helpful for selecting proper materials for barrier protection of food packages.

Nature of Polymer

Generally, the gas and vapor barrier of polymers is improved with increasing polarity of certain types, regularity of molecular structure, and close chain-to-chain packing in the polymer matrix (3). As shown in Table 2, polar functional groups such as OH, Cl, and CN decrease O_2 and CO_2 permeabilities under dry conditions due to strong polymer interactions. High polarity results in high cohesive energy between the polymer chains and consequently lower diffusion and permeability (4).

Figure 5 explains the effects of polymer interactions on the diffusion path taken by the permeant. In situation (a), such as for polyethylene, there is no or very weak interaction between the nonpolar polymer chains, and hence the permeant molecule may diffuse through the polymer matrix via a shorter and more direct path. In situation (b), such as for EVOH, there are strong intermolecular interactions such as hydrogen bonding between the polymer chains. These strong interactions block the passage of the permeant molecule, requiring it to diffuse in the polymer matrix via a much longer path. The longer diffusion path also causes the permeability to decrease.

Permeability also decreases with increasing crystallinity and molecular orientation in the polymer matrix, since regions of crystallinity and molecular orientation are obstacles to the passage of the permeant. Polymers with regular molecular structure and close chain-to-chain packing tend to have higher degrees of crystallinity and

Table 2. Gas or Water Vapor Permeabilities of Selected Polymers

	Permeability for gas (cm^3 mil 100 in.$^{-2}\cdot$ day$^{-1}\cdot$ atm^{-1}) and Water Vapor (g mil 100 in.$^{-2}\cdot$ day$^{-1}\cdot$ atm^{-1})				
Polymer	O_2 (Dry Condition)	O_2 (Wet Condition: 80% RH)	CO_2 (Dry Condition)	H_2O (38°C, 90% RH)	Functional Group
PVOH	0.02	7.00	0.06	10.00	–OH
EVOH	0.05	7.00	0.23	10.00	–OH
PVDC	0.08	0.08	0.30	0.05	–Cl
PAN	0.03	0.03	0.12	0.50	–CN
PET	5.00	5.00	20.00	1.30	–COO–
Nylon 6,6	3.00	15.00	5.00	24.00	–CONH–
PP	110.00	110.00	240.00	0.30	$-CH_3$

Abbreviations: PVOH, poly(vinyl alcohol); PAN, polyacrylonitrile; refer to Table 1 for others.
Source: From Halek and Garg (3) with kind permission of American Chemical Society.

are more easily oriented in molecular structure. Higher crystallinity also lowers the solubility of permeant in the polymer matrix and thus the permeability. Inclusion of crystallites or inorganic platelets may also increase crystallinity and lower permeation (5).

Permeability generally increases with addition of additives, fillers, and plasticizers in the polymer matrix. Inert fillers such as $CaCO_3$ and ceramic powder have been used to increase the gas permeability of polyolefin films for fresh produce packaging applications.

Nature of Permeant

Permeability also depends on molecular size of the permeant and its chemical affinity to the polymer matrix. Larger permeant molecules generally have lower diffusivity and higher solubility compared to smaller molecules, although solubility also depends on the chemical similarity between the polymer and the permeant (6).

It is interesting to note in Table 1 that the values of CO_2 permeability are typically 3–7 times the values of O_2 permeability. How could the larger CO_2 molecule permeate faster than the smaller O_2 molecule? The answer may be found by recalling (equation (4)) that permeability is the product of diffusion coefficient and solubility coefficient. While it is true that CO_2 diffuses slower than O_2, the solubility of CO_2 is much higher than O_2; the combined effect enables CO_2 to permeate faster than O_2. Although CO_2 molecules diffuse slower, there are more of them diffusing through the polymer matrix.

Ambient Environment

The most important environmental factors are temperature and relative humidity. Temperature generally affects gas permeability by following Arrhenius equation:

$$\bar{P} = \bar{P}_o \exp\left(-\frac{E_a}{RT}\right) \tag{11}$$

where $\bar{P}_o$ is pre-exponential factor, E_a is activation energy, R is gas constant, and T is absolute temperature.

As a rough estimate, a 10°C increase in temperature increases the permeability roughly by a factor of 2. However, the temperature dependence of permeability drastically changes at glass transition temperature; that is, the activation energy changes around that temperature. Many packaging plastics such as PET, PE, and PP show the change of activation energy in a narrow temperature range between 0°C and −12°C.

When water under high humidity is absorbed onto the polymer and interacts with polar group to swell the polymer structure, the gas permeability is greatly increased. Moisture acts as a plasticizer in the polymer structure. This kind of behavior is observed for PVOH, EVOH, and nylon 6,6, but not for polar polymers such as PVDC and PAN (Table 2). Moisture interacts differently with different types of polymers: It is absorbed little onto nonpolar polymers (PP) and certain types of polar ones (PVDC, PAN) and thus does not affect the permeability. The interaction of the polymer with moisture can be seen by high water vapor permeability for PVOH, EVOH, and nylon 6,6 (Table 2). Higher polarity of EVOH resulting with the lower ethylene content increases the water vapor permeability, which means increased sensitivity to moisture.

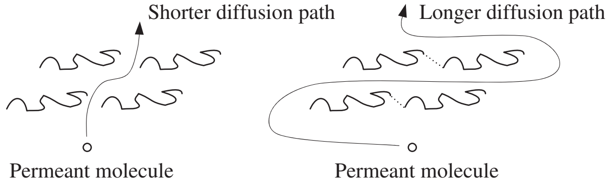

(a) No interactions between polymer chains
(b) Strong interactions between polymer

Figure 5. Effect of interactions on diffusion paths.

GAS TRANSPORT THROUGH LEAKS

Besides permeation, leak is also an important mechanism of gas transport. Pinholes and channel leaks are two types of leakers occasionally found in defective packages. Pinholes may be found on package walls—for example, on very thin aluminum foils of less than 1 mil thick. Channel leaks are minute channels that may found in defective seal areas caused by improper sealing conditions. Since channel leaks usually have larger depths than pinholes, their leak rates may be much slower.

Figure 6 illustrates that the mechanism of gas transport through a pinhole involves diffusion of gas molecules through a column of stagnant air inside the pinhole.

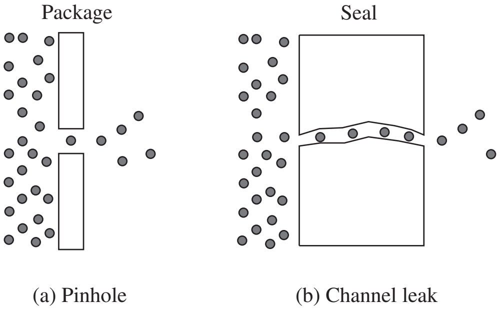

Figure 6. Pinhole and channel leak.

Unlike permeation, the steps of adsorption and desorption are not involved. Also, diffusion through leak occurs in air, while diffusion in permeation occurs in solid. The diffusion velocity in gases, liquids, and solids are generally in the range of 0.00001, 0.5, and 10 cm/min, respectively—hence the transport of gas usually occurs faster through leak than permeation. Both channel leaks and pinholes should be prevented since they can significantly compromise the gas barrier of the package.

BIBLIOGRAPHY

1. D. H. Chung, S. E. Papadakis, and K. L. Yam, A model to evaluate transport of gas and vapors through leaks. *Packag. Technol. Sci.* **16**, 77–86. 2003.
2. D. S. Lee, K. L. Yam, and L. Piergiovanni, *Food Packaging Science and Technology*, CRC Press, Boca Raton, FL, 2008, pp. 85–86.
3. G. W. Halek and A. Garg, Fungal inhibition by a Fungicide Coupled to an Ionomeric Film," *J. Food Safety* 1989; **9**(3), 215–222 (1989).
4. B. Pascat, *Study of Some Factors Affecting Permeability*" in, M. Mathlouthi, ed., *Food Packaging and Preservation*, Elsevier Applied Science, London, 1986, pp. 7–23.
5. W. E. Brown, *Plastic in Food Packaging*, Marcel Dekker, New York, 1992, pp. 292–396.
6. R. J. Hernandez, S. E. M. Selke, and J. D. Culter, *Plastics Packaging*, Hanser Publishers, Munchi, Germany, 2000, pp. 313–352.

GLASS BOTTLE DESIGN AND PERFORMANCE

Michael W. Davis
American Glass Research,
Butler, Pennsylvania

INTRODUCTION

Glass containers continue to be the preferred package for a variety of foods and beverages (1). The reasons behind the long-standing preference are numerous and include that glass containers are made from raw materials that are abundant and inexpensive. Glass containers are rigid and can be easily transported, filled, and stored. They are available in a variety of sizes, shapes, and colors (see Figure 1). Products look better, taste purer, and are secure when packaged in glass. Glass containers are 100% recyclable and are environmentally friendly. Thus, glass would appear to be the ideal packaging material. However, glass is heavy, adding cost to the delivered product. Glass is also fragile and can fail without warning. Thus, there are challenges for glass to remain competitive as a packaging material.

Historically, glass bottles were designed to be heavy and rugged. Conventional wisdom called for additional glass to avoid performance issues. Prior to the 1960s, the majority of the bottles were refillable items that were comparatively heavy. At that time, energy and raw material costs were low and the lack of major competition suppressed the need for change. However, there were two major events in the 1970s that significantly changed the glass packaging industry. The first event was the energy embargo (2) causing a huge spike in both manufacturing and transportation costs. The second event was the introduction of the plastic beverage bottle to the packaging market (3). Competition from a lighter and compliant packaging material was a major threat to market share. Thus, these two events forced the glass packaging industry to consolidate; upgrading to newer and more efficient plants while closing several of the older and less efficient plants (4).

To reduce costs and improve efficiencies, larger and faster IS-forming machines were needed. Changes in forming technology provided the means for faster and more efficient production of bottles. The faster machines required changes in mold technology and cooling methods (5). Improved surface treatments enhanced bottle surface strengths (6). Thus, means for lighter, stronger, and more competitive bottles were now available. However, lighter bottles required more attention to detail since there was

Figure 1. Glass containers come in a variety of sizes, shapes, and colors.

less glass to compensate for quality or performance related issues. Thus, a thorough understanding of the importance of design on performance became critical.

COMPUTER MODELING

To aid in addressing these issues, various computer modeling software packages are being used to develop and analyze new designs (7). Computer-aided design and modeling techniques have provided several important and cost-saving innovations in bottle design. Concept designs are easily created into three-dimensional models (see Figure 2). Many programs offer photo-realistic images to view the finished product, including colors, labels, and closures. Bottle properties such as weight, capacity, headspace, centers of gravity, and moments of inertia are easily determined that once took several hours of manual calculations. Bottle prints including exact dimensions and tolerances can be quickly created. Finite element analyses can be used to determine the stress levels created in the bottle to evaluate the performance of the design. Changes such as reducing glass weight, redistributing the glass, and/or modifying the shape can be readily made in the computer model to ensure that the bottle design is strong, safe, and capable of meeting modern packaging requirements without ever having to create a bottle. Thus, computer-aided design and modeling techniques provide the tools for a fast response to changing tastes and demands in the marketplace.

MARKETING

The competition in the food and beverage industry continues to grow. Both existing and new products require fresh packages with customer appeal and enhanced brand recognition (see Figure 3). Glass container companies have met these requirements by taking advantage of the advances in both technology and marketing. Many existing and stock designs have been given a new and clean look with creative labeling and other decorative treatments. However, most new designs originate from unique and different concepts that provide greater visibility and maximize shelf appeal. Thus, it is the designer's role to convert the concept into a viable design without violating the theme of the package.

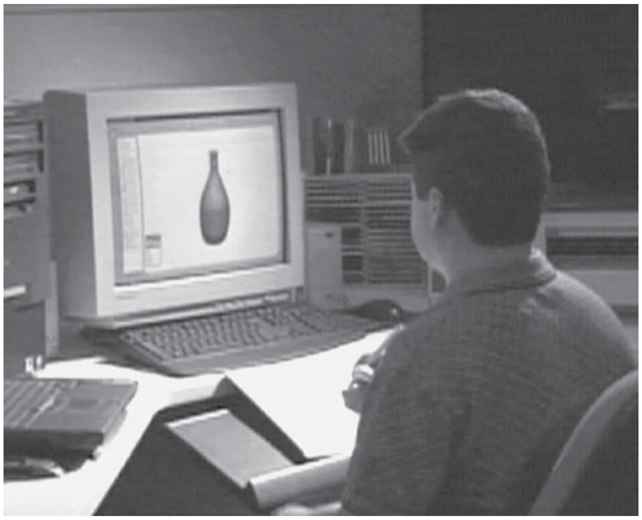

Figure 2. Computer modeling being used to develop new designs.

Figure 3. Labels and decorations promote customer appeal and brand recognition.

REQUIREMENTS

The performance of the glass container is measured against its intended usage. Often, the intended usage is determined by the product and processing requirements. If the container is expected to withstand internal pressure, the shape, weight, and thickness distribution must be selected to provide the safe performance for any internal pressure applied to the bottle. If the product requires special processing after filling, such as pasteurizing or retorting, again, safe performance of the package is required for any loads that might be applied to the bottle. If the container is expected to withstand a top load generated during the capping process or during warehouse storage, the design must exhibit a safe performance for vertically applied loads. And finally, nearly all bottles are expected to receive some level of impacts during the handling or transport of the ware. As filling line speeds increase, safe speeds and gentle handling will be required to achieve good performance. Thus, a thorough understanding of the various requirements is necessitated in order to achieve a design which will exhibit good total performance.

Internal pressures can be generated in bottles either by the product or during the filling process. Many products, such as soft drinks, beers, champagnes and waters, have carbon dioxide (CO_2) dissolved into the product, mainly to enhance the flavour and provide a pleasing sensory effect. The amount of pressure is determined by the level of CO_2 gas and its temperature. With the exception of an inadequate headspace, the approximate pressure levels can be determined from the universal gas laws and CO_2 solubility tables in water (8). Increases in CO_2 and/or temperature cause the pressure levels to increase.

Carbonation levels can vary widely. Beers typically have 2.5 to 3.0 volumes of CO_2, soft drinks have 3.0 to 5.0 volumes of CO_2 and champagnes have 5.0 to 7.0 volumes of CO_2. Normal ranges in temperatures vary from 3°C to 5°C during cold filling to over 60°C during pasteurization or retorting. A typical design pressure level for a beer item during heat pasteurization is 7 bars, whereas the design pressure level for a highly carbonated soft drink item stored in an unvented automobile on a sunny day is 10 bars. Thus, the design pressure will vary with product type and process requirements.

Internal pressures can also be generated in bottles by counter pressures applied during filling (see Figure 4). The counter pressure is used to increase the production speeds and to avoid excessive foaming. Although not exceedingly high, counterpressure levels are typically set in the 3- to 4-bar range. Internal pressures are also generated in bottles during case packing when filled bottles are dropped into cases. The energy of the falling product is converted into a momentary surge pressure. The surge pressure can be as high as 5 bars, depending on the size of container and height of drop. Most bottles for carbonated products have no problems with either counterpressure or surge pressure loads. However, bottles for noncarbonated products or nonround bottles with large flat panels are usually not designed to withstand even these lower pressure loads and may exhibit pressure-related performance issues.

Following filling, bottles are sealed with closures to preserve freshness and protect the product from contaminants. The product will dictate the type of closure necessary to seal the container. For example, crown, twist-crown, or ROPP (roll-on pilfer-proof) closures are necessary for sealing bottles with carbonated products. Lug and/or PT (press-on, twist-off) closures are commonly used with hot-fill items that pull a vacuum when cooled. Screw-on, push-in, or crimp-on closures are commonly used for normal seal applications for wines, liquors, or other food products that do not have pressure or vacuum requirements. In most cases, top loads are required to form a seal between the closure and the finish of the container. For normal seals or vacuum closures, top loads rarely exceed 900 newtons. However, for pressure seals, top loads applied to bottles often exceed 4500 newtons. Again, the design load will vary with product type and process requirements.

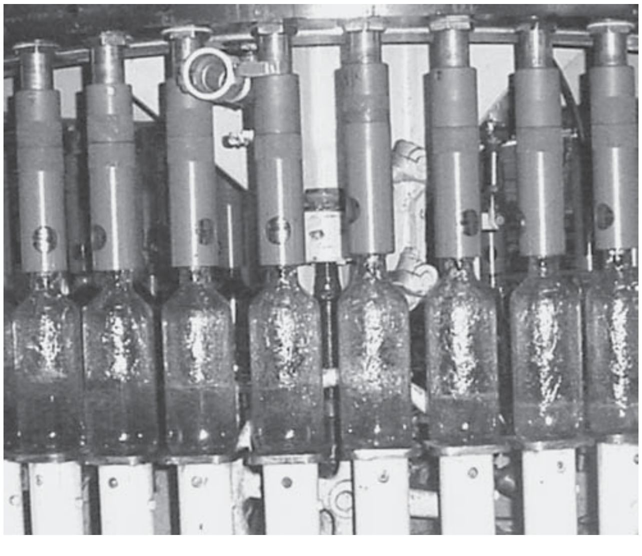

Figure 4. Counterpressures generated during filling.

Figure 5. Uneven loading in the pallet stacks.

Top loads are also generated in stacked pallets of filled containers in the warehouse (Figure 5). Generally, each pallet is topped out at approximately 9 kilonewtons, and they are usually stacked 3 pallets high. In a perfect setting, the weight of the stacked pallets is evenly distributed over the bottles in the bottom row and, on average, each bottle supports approximately 180 newtons. However, storage settings are not perfect; floors are rarely flat; stacking is often uneven; and as the weights shift, the loads are no longer uniformly distributed. A rule of thumb for determining the sustained top force in warehouse storage is to introduce a factor of safety of 10 into the calculations; that is, each bottle on the bottom row must sustain a stacking force 10 times the normal perfect load. Performance-related issues with warehouse stacking are typically associated with nonpressure bottles and jars where the shoulders have not been designed to withstand much top loading.

Many food and beverages are heat-treated either prior to or after filling. The purpose of the heat treatment is to destroy microorganisms and bacteria that may spoil the product or alter the flavor or appearance. This requires that the product be exposed to a specific temperature for a given length of time. The most common heat treatment of product in a container is heat pasteurization, typically used in the beer industry. After cold filling, bottle and product are typically 5°C when they enter the pasteurizer.

The combination is quenched in heated water until the product achieves a temperature of approximately 60°C and then held at the elevated temperature for 6 minutes. The heated bottle and contents are then cooled in stages. The entire heat process takes approximately 20 minutes. It is not the rapid heating of the container that is cause for concern but rather it is the sudden cooling of the container's outer surface. To ensure good thermal performance, a limit on the level of the down shock is required.

Finally, nearly all bottles will receive impacts during their intended usage regardless of whether they are pressure, nonpressure, or vacuum items. Although impact loading is the most commonly applied load, it is perhaps the least understood. Of all the major loads applied to a container, the applied forces created during an impact will be mostly dependent on the properties of the container. In fact, for a given striking velocity, the impact forces will increase with increasing mass and contact stiffness (9). The stiffness or rigidity of the container will vary with impact location and design, while the mass will be dependent on the weight of the container and product (if filled).

In general, the stiffness will be higher at the shoulder and heel contact points than in the sidewall. This is due to complex curvature of the shoulder and heel design. The sidewall, which is cylindrical in shape, is far more flexible and exhibits a lower stiffness. Basic design parameters, such as body diameter and wall thickness, will also affect the stiffness. Decreasing body diameter and increasing wall thickness will increase the stiffness. The total mass will obviously be higher in filled bottles than in empty ones. Similarly, the mass will be greater in larger capacity bottles than in smaller ones, and the mass of refillable bottles will be greater than for nonrefillable bottles. Thus, higher-impact forces will be created in filled versus empty, in larger versus smaller capacity, and in refillable versus nonrefillable ware. The performance requirements for impact loading will vary with bottle size, design, and usage.

The maximum striking velocity that a container can survive greatly depends on the forces created during an impact. Again, these forces depend on the container size and shape and the location of the impact site. Such information is useful in selecting belt speeds and equipment settings in handling and transport of the ware. Differences in expected impact forces are the reasons that empty ware is transported faster than filled ware, small capacity ware is transported faster than larger capacity ware, and lightweight nonrefillable bottles can be transported faster than heavier refillable bottles. As demands for improving efficiencies increase, knowledge of safe handling and transport speeds will be critical for achieving good line performance (see Figure 6).

STRENGTH OF GLASS

The strength of pristine glass is considerably higher than any other packaging material. However, design strengths are compromised because glass is susceptible to surface damage and prone to static fatigue (10). Surface damage in glass bottles can result from the manufacturing process or it can be created by mechanical contact during handling, filling, or distribution of ware. The damage creates stress concentrators in the surface, and any increase in severity of the damage results in lower surface strengths. Various strengths exist for different parts of the bottle. Also, strengths for momentary loading, such as for impacts during handling, are significantly different than those for long sustained loads, such as pressures produced by a carbonated product. Thus, in order to achieve light and efficient designs without compromising performance, an understanding of the surface strengths of a glass container is critical.

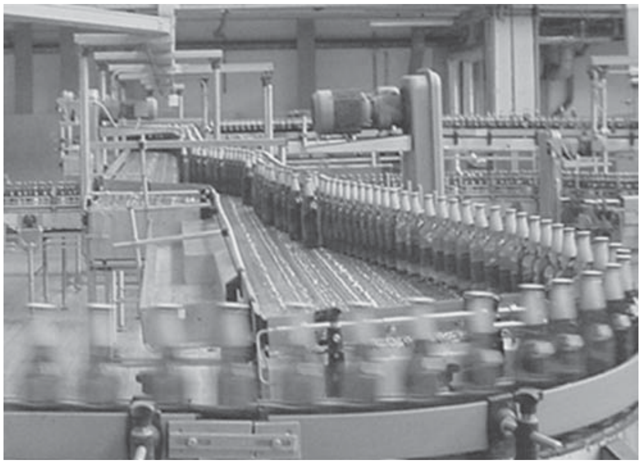

Figure 6. High-speed transport of filled bottles.

There are natural contacts or "touch" points on the outer surface of a glass bottle where the majority of handling damage is generated. These regions include the shoulder contact, heel contact, and bearing surface. Each of these regions will exhibit lower surface strengths according to the degree of damage sustained. Noncontact regions on a glass bottle are generally protected from mechanical damage and will exhibit higher surface strengths. These regions include the shoulder, neck, heel, and bottom. The parts of the bottle are illustrated in Figure 7.

The degree of damage created during handling is also strongly related to the market. For the nonrefillable market, the degree of handling is limited by the single trip through the process. In addition, surface treatments are applied to the outer surface of bottles as a thin metal oxide film that is overcoated with a polyethylene, oleic, or stearate compound. These surface treatments increase the lubricity and scratch resistance of the bottles (11). With limited handling and protected outer surfaces, the bottles exhibit higher surface strengths that can be utilized for lightweighting purposes.

For the refillable market, the degree of handling extends over multiple trips, with most refillable bottles surviving 25 trips or more. Obviously, the degree of handling damage is significant from repeated usage as evidenced by the visible wear bands created at the touch points. Although surface treatments have been used on refillable bottles, their effectiveness is lost following 3 to 5 trips due to the caustic washes employed between cycles. Once the surface treatments have been removed, the

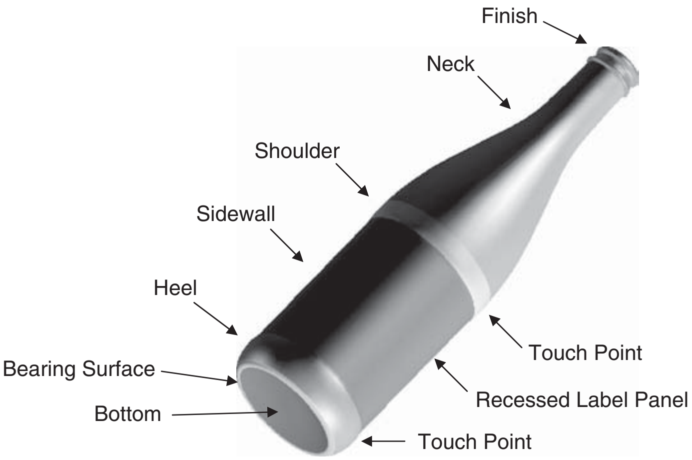

Figure 7. Parts of a bottle.

bottles will then again become susceptible to scuffing, resulting in lower surface strengths. It is noteworthy that some limited success has been achieved with scuff-free coatings applied to refillable ware (12) that is paving the way for lightweight returnable bottles.

The strength of the outer surface of bottles can also be affected by the presence of labels or decorations and may need to be taken into account in the evaluation of the design. Shrink wrap labels that encapsulate the bottle can protect the outer surfaces from handling damage that may, in turn, result in higher surface strengths. Applied Ceramic Labels (ACLs) are silk-screened ceramic paints that are fired onto the glass surface and become a permanent part of the bottle. The strength of the labeled glass depends on the voids and cracks in the ceramic label which can lower the glass strength. Although the ACL label was cost effective when applied on heavier refillable bottles, its strength lowering characteristics can limit the degree of light-weighting in nonrefillable ware. Also, frosted surfaces, which are created with an acid etch or sandblasting, exhibit a pitted surface. These processes remove the surface treatments, and the pitted surfaces become more prone to handling damage.

Also, the strength of the inside surface of a container is significantly higher than the outer surface. This is due to its pristine nature and lack of any mechanical contact. However, there are differences in inside surface strengths that depend on the manufacturing process. The inside surface of blow-and-blow ware is stronger than that for either press-and-blow or NNPB ware. Air is used to create the internal cavity of the parison for blow-and-blow ware, whereas the metal plunger used to create the internal cavity of the parison in either the press-and-blow or NNPB process can deposit small foreign particles into the molten glass surface. These particles, often referred to as “black specks,” can act as stress concentrators and lower the strength of the glass. Thus, these differences must be taken into account when evaluating the design for performance.

Although glass is considered to be chemically inert, freshly formed surface flaws will react chemically with moisture in the environment. This reaction will cause stressed cracks to grow slowly, which in turn lowers the breaking strength of the glass. This slow crack growth mechanism is commonly referred to as “static fatigue” and is responsible for delayed failures, such as pasteurization or warehouse breakage. Because of its chemical nature, increases in either moisture content or temperature will accelerate this process. Thus, wetted glass is weaker than dried glass and hot glass is weaker than cold glass.

When the flaws are only momentarily stressed, such as during an impact, there is very little time for any reactions; and thus little, if any, crack extension or strength loss occurs. However, when flaws are subjected to sustained stresses, such as those produced by a carbonated product stored inside a beverage bottle, there is ample time for cracks to react and extend, provided that the stress levels are sufficiently high. The time-to-failure depends on the initial flaw size and level of stress (see Figure 8). In general, as the stress levels increase, times-to-failure decrease. Also, as the initial flaw size decreases, times-to-failure increase when subjected to the same stress level. Nevertheless, if the length of the extending flaw becomes critical, spontaneous failure can occur without warning. A thorough and prudent design review takes these factors into account to avoid any issue involving static fatigue.

PERFORMANCE

The first step in evaluating the performance of the design is to gather the facts. Identifying the product and any special characteristics will dictate which load types will be applied to the bottle. It is important to identify the magnitude of each load type, since it may change depending on product, processing, or warehouse conditions. It is important to identify the duration in which loads will be applied to account for differences in static fatigue strengths. Identifying the intended market is also important because strength and weight requirements for refillable markets are distinctly different from nonrefillable markets. Determine whether any special labels will be applied that might alter the performance characteristics—for example, shrink wraps or ACLs. And finally, determine the manufacturing process that will be used to produce the bottle since it may affect glass weight, thickness distribution, and inside surface strength. This information will help determine the targeted weight, strength

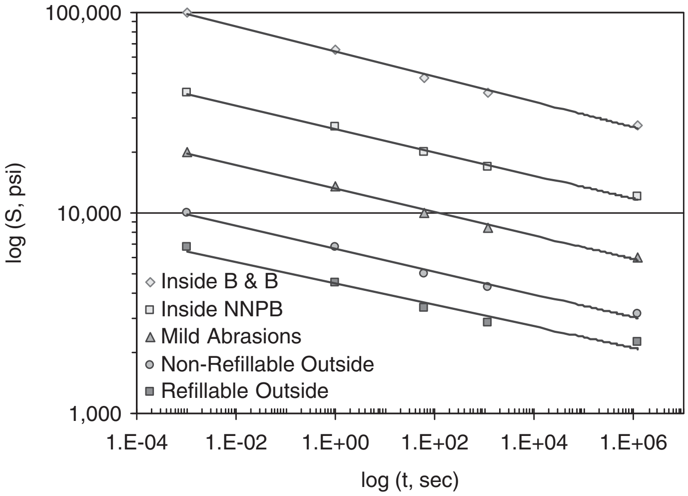

Figure 8. Approximate fatigue strength of soda lime container glass.

criteria, and complexity of modeling. Furthermore, this information is necessary to establish the criteria against which the design is judged for acceptable performance.

The next step is to create a computer model of the design. This can be achieved by various methods. However, the outer surface profile is usually predefined with all the drawing parameters listed on a bottle print. These profiles may be completely new or a modification to a preexisting design. In most cases, the profiles can be directly imported into the model software from a CAD drawing file. Otherwise, the outer surface is manually created to match the concept drawing. The inside surface is initially created by using thicknesses that are equal to industry minimum specifications in the sidewall and bottom regions. Adjustments to these thicknesses may become necessary following the analysis. Some software packages will automatically define the inside surface from simulations of the glass-blowing process (13). In addition to glass weight, other bottle properties, such as overflow capacity, percent headspace, tip angle, and centers of gravity, are readily determined in the solid model. Any changes to the geometry of the bottle can be quickly made with these software packages to correct for any deficiencies with bottle properties and/or weight.

The third step is to select and construct the appropriate finite element model for determining the stress distribution resulting from applied loads. There are generally two types of finite element models used to evaluate the performance of the design. An axisymmetric model can be used if the bottle is round and the applied loads are axisymmetrically applied, such as pressure or top loading. Such models are easily created and greatly reduce computational time. However, if the bottle is nonround or the loading is nonaxisymmetric, such as impact, a three-dimensional model is necessary. To reduce the size of the three-dimensional model and the computational time, axes of symmetry are often used. In most cases, either half-bottle or quarter-bottle symmetry will suffice.

Once the model is selected and the boundary conditions are set, mainly for axes of symmetry, the loads are applied to either individual nodes (special locations on the model) or to surfaces. For internal pressure loading, the inside of the bottle is defined as a surface over which the pressure is uniformly applied. In the case of impact or vertical loading, individual forces are applied to the impact site or along the sealing surface in the finish region of the bottle, respectively.

The magnitude for the load is usually set to one. Thus, for pressure, the load is 1 bar. For top loading, the total load is 1 newton and for thermal shock, the temperature difference is 1°C. The corresponding stress results are then indexed per unit load. Since glass is linearly elastic, the total stress can simply be determined by multiplying the stress index by the actual load. This approach also conserves time and effort. For example, the stress distribution plot shown in Figure 9 corresponds to a 12-oz long-neck beer bottle subjected to a unit internal pressure load. It is obvious that the stresses are not uniformly distributed throughout the bottle but vary from location to location. In general, regions of the bottle most susceptible to pressure performance problems are the contact points where the strengths are the lowest. Regions of maximum stress in the noncontact region are also susceptible to performance problems; however, the surface strengths are higher. This also includes the inside surface where surface strengths are the highest.

Because these results are indexed, the total stress generated from the counter filling pressure during heat pasteurization and/or during storage in a warehouse can be easily determined in spite of the fact that the pressure levels and durations are different. The pressure levels are determined from the (filling) machine settings or from the expected carbonation levels and temperatures in the pasteurizer or warehouse. The strength criteria are determined from the durations of the loads and locations on the bottle. Thus, one analysis is quickly turned into three evaluations. The performance is determined by ensuring that the stress levels do not exceed the expected strengths in the various areas of the container for each of the load conditions.

This same bottle will require a sealed closure for the carbonated product. In general, the applied top force will cause a compression or shortening of the bottle. Even though glass does not break in compression, two bands of tensile stress are generated at the touch points. As illustrated in Figure 10, one band is at the shoulder contact

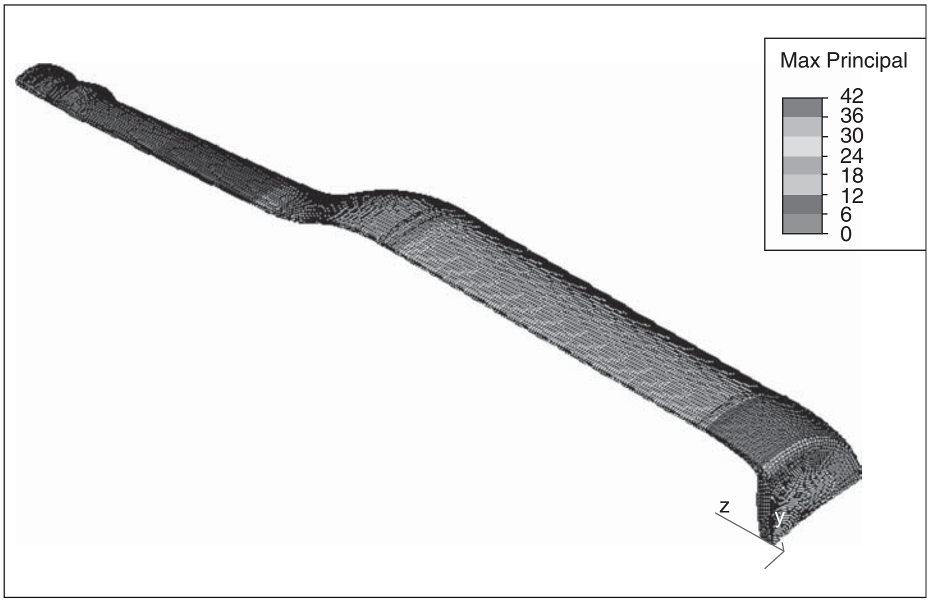

Figure 9. Internal pressure stress indices in a 12-oz long-neck beer bottle (psi/psi).

and extends upward into the shoulder. The other band is at the heel contact and it extends into the lower heel. Since the results in Figure 10 are indexed, the total stress can be determined by multiplying the index values by the expected top loads. In the case of the capper, the indices are multiplied by the total capping force. In the case of warehouse storage, the indices are multiplied by the enhanced stacking force. The strength criteria are determined from the durations of the loads and locations on the bottle. Thus, one analysis is quickly turned into two evaluations. Again, acceptable performance is determined by ensuring that the stress levels do not exceed the expected strengths in the various areas of the container.

An example of where the stresses are not axisymmetrically distributed is shown in Figure 11, where an impact is delivered to the heel contact of a supported 12-oz long-neck beer bottle. In this case, a three-dimensional model with quarter symmetry is employed due to the bottle and loading conditions. There are three types of stress generated during an impact (14). The first and by far the largest are the contact or Hertzian stresses. These stresses are localized and created on the outer surface at the impact site. They are mainly dependent on the hardness and geometry of the contacting object (15). The second highest stress is the flexure stress, which occurs on the inside surface at the impact site. These stresses are also localized and become more of a performance-related issue with NNPB or Press & Blow ware due to the lower inside surface strengths. The third and lowest of the three stresses are the hinge stresses as shown in the figure. They occur on the outer surface and away from the impact site. For the heel impact, there are hinges on either side of

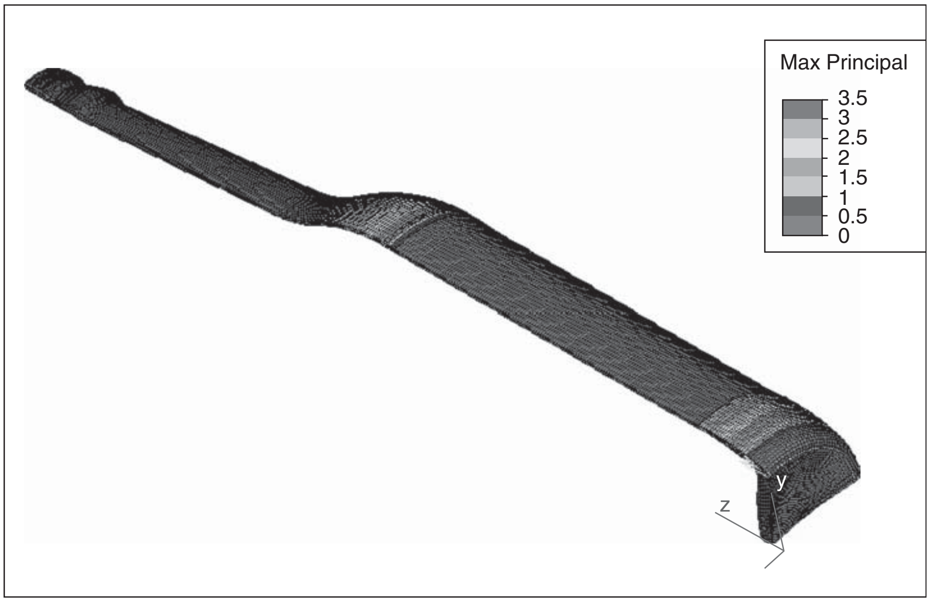

Figure 10. Vertical load stress indices in a 12-oz long-neck beer bottle (psi/lb$_f$).

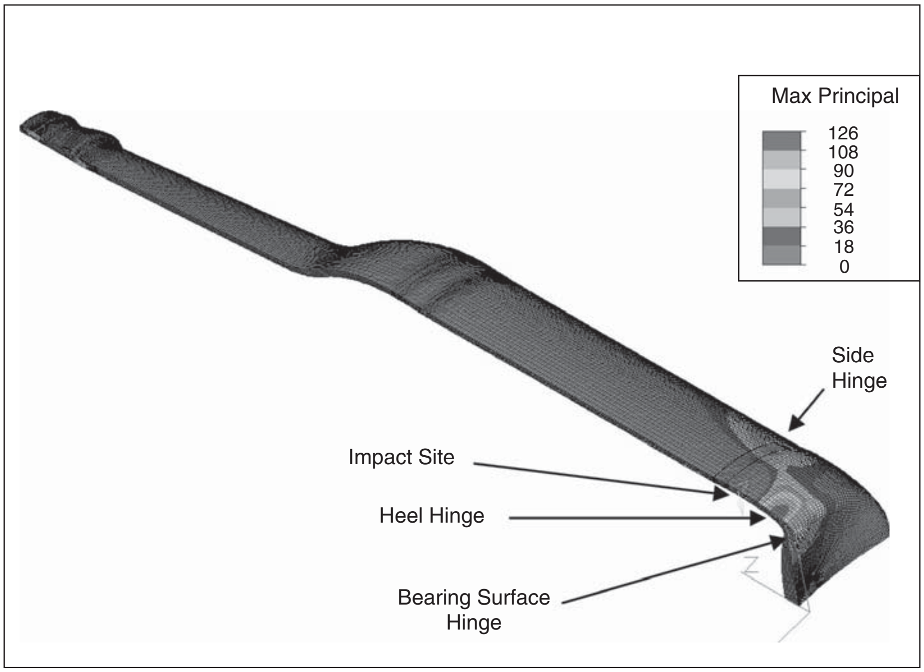

Figure 11. Heel impact stress indices in a 12-oz long-neck beer bottle (psi/ips).

the impact site. There are also heel hinges that occur directly beneath the impact site, which often extend downward into the bearing surface where the surface strength are lower.

As shown in Figure 11, the results are also indexed. However, the unit force is taken as a unit striking velocity, where the results are expressed for a filled bottle striking a rigid object. As such, the performance of the bottle is measured against a severe trade impact. The maximum striking velocity that filled containers can survive is then determined by dividing the expected impact strengths by the various stress indices for the severe impact loading. Such information is useful in selecting belt speeds and equipment settings in the handling and transport of the ware. Alternatively, if the transport velocities in a filling line are known, the total stresses generated in the filled bottle subjected to a severe impact can be determined by multiplying the stress indices by the line velocity. Again, acceptable performance is determined by ensuring that the stress levels do not exceed the expected strengths in the various areas of the container.

Obviously, total performance is dependent on the individual performances for the various loading conditions. To ensure that the design will be a safe package for the consumer, the stresses generated for all of the various loads at all locations in the bottle must be less than the expected surface strengths associated with the glass bottle. If any of the stresses equal or exceed the surface strengths, the entire design is then considered questionable or unacceptable until all of the performance criteria are met for the expected usage. Modifications to the design are then necessary to lower the stresses into an acceptable range. This may involve adjusting the thickness distribution by moving glass into more sensitive regions without changing the glass weight. It may involve altering the shape of the shoulder or heel of the bottle without violating the theme of the package. Finally, the suggested or targeted weight may simply be insufficient, and additional glass has to be added to the design. Whatever approach is taken, the goal is still to offer the consumer an appealing and safe container package.

MODIFICATIONS

Failure to meet a performance requirement is no reason to abandon a design. One of the advantages of computer modeling is the ease and quickness of changing a design. However, to utilize the efforts of marketing research in developing the look and feel of the concept design, changes must be made thoughtfully so that the theme or flavor of the design, which is often used for brand recognition, is maintained. Consider the changes made to the Michelob bottle as shown in Figure 12. When viewed together, the changes may not appear as modest; however, these design changes occurred over a 30-year span. However, during that time, 127 g of glass were removed from the original design, making today's bottle a true lightweight. Even at a lighter weight, the design has better performance characteristics than the original design due to computer modeling and evaluation. It is worth noting that the shape still exhibits the long tapered neck and pinched waist associated with the original Michelob bottle style.

Obviously, all designs cannot afford 30 years to evolve into high-performance lightweight bottles. With markets and tastes rapidly changing, responses must be quick and direct. The quickest approach to improve a design's performance is to shift glass into sensitive regions without changing the total glass weight. No changes are required to the outer surface, leaving the theme of the design untouched. By keeping the weight fixed, there are no changes to overflow capacity or head space with only

Figure 12. Evolution of the Michelob bottle.

slight changes occurring in the center of gravity and tip angle. This obviously requires removing glass from other areas of the container. In many designs, the bases are under designed while the upper shoulder and neck regions are over designed. Thus, shifting glass from the neck and shoulder regions into the base is often recommended. In fact, a study by Davis and Shott showed that the shift in glass into the lower heel region is one of the best ways to enhance the pressure performance of lightweight glass bottles (16).

Improvements to the performance of a design can also be achieved by changing its shape. However, in many instances, shape changes in the design can lead to compromise. For example, the effect of increasing the contact radius of a simple shoulder design is shown in Figure 13 where the conical shape is transformed into a rounded or bulb-like design. The stress distribution plots in the upper half of the figure show that for internal pressure, stress at the shoulder contact increases with increasing shoulder contact radius. Also, the maximum stress in the shoulder region decreases as the shoulder contact radius increases. If the shoulder contact stress is too high, reducing the radius will help lower its value. Keep in mind that as the shoulder contact radius is reduced, the maximum stress in the shoulder is also increasing. Thus a compromise may be needed on the radius change in order to maintain both levels of stress in an acceptable range.

There may be other compromises to consider. The results for the same shoulder contact radius changes for vertical loading are shown in the lower half of the figure.

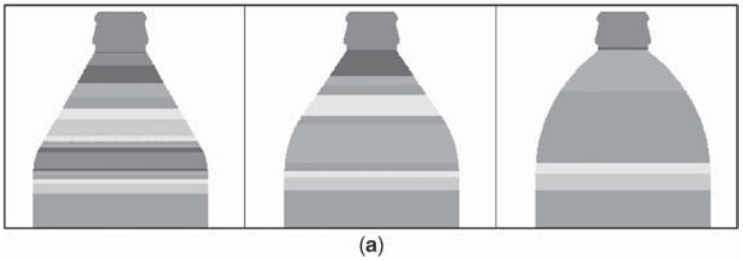

(a)

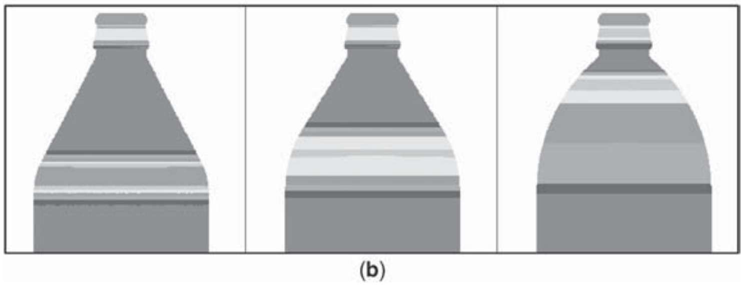

(b)

Figure 13. Effect of shoulder shape on bottle performance: (**a**) Internal pressure (4–18 psi/psi) and (**b**) vertical loading (0–1.4 psi/lb).

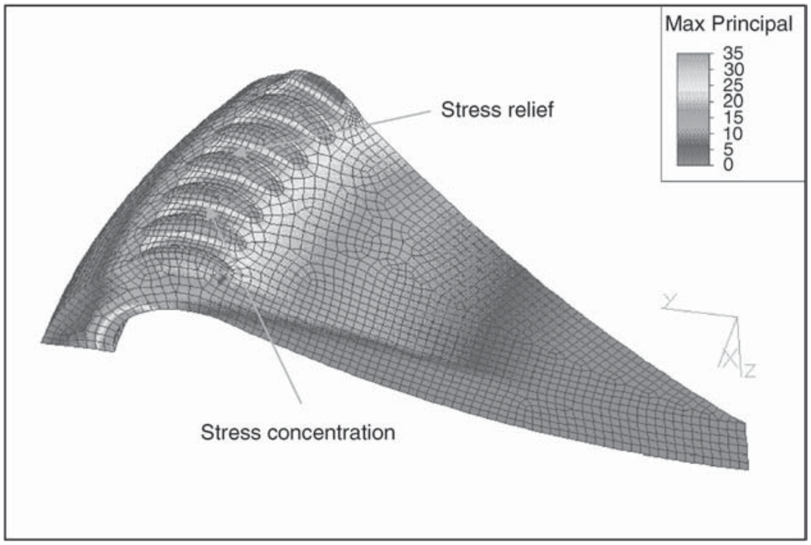

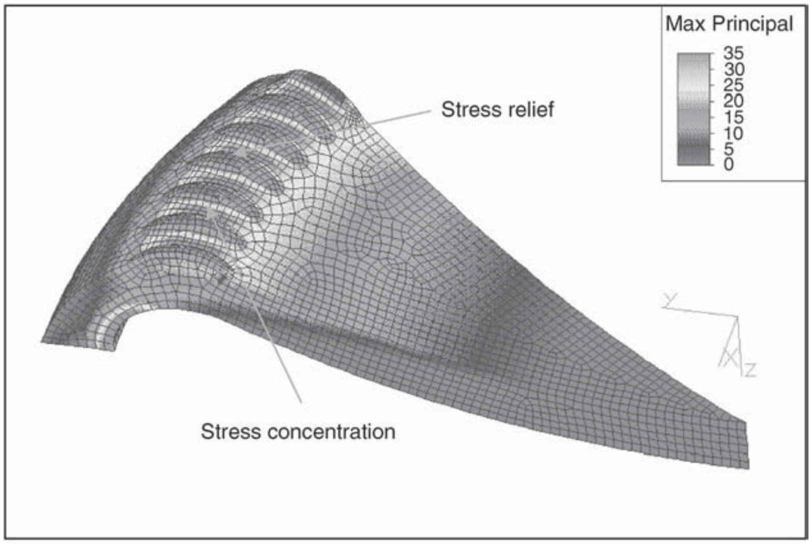

Figure 14. Effect of bearing surface knurling on bottle performance (psi/psi).

These results are opposite to those found for internal pressure loading. As the shoulder contact radius increases, the stress at the shoulder contact decreases while the maximum stress in the shoulder region increases. Thus, while making shape changes to the design, it is important to consider the effect of any shape change on the stresses created by all of the applied loads, thus preventing the introduction of a new issue while attempting to resolve another. Similar compromises may be required when altering the push-up, heel contact height or toe-in of the design.

Lightweighting is perhaps the most important innovation in keeping glass packaging competitive. The rules for performance of lightweight designs are no different; stresses generated from the applied forces must not exceed the surface strengths. However, as glass is removed from the design, the stresses will increase with decreasing wall thickness and there will be a limit to lightweighting when the surface strengths of the bottle are exceeded. Additional lightweighting can only then be achieved by reducing stresses and/or increasing design strengths. Attempts have been made to increase strengths by tempering glass bottles (17) or enhancing the surface strengths with acrylate coatings (18).

The design strength can also be enhanced through creative design methods. Since the design strength is dependent on the degree of handling abuse, containers can be designed to focus the handling damage to lower stressed regions and protect the higher stressed regions from handling abuse. Including recessed label panels in a bottle design will help protect both the label and the sidewall from normal bottle-to-bottle handling damage. Having a higher design strength in the sidewall paves the way for removing glass in this region. In fact, the most efficient place to remove glass is from the sidewall. The recessed label panel also focuses any handling damage at the shoulder and heel touch points where the stresses decrease with increasing label panel depth (19). Also, including knurling on the bearing surface in the design concentrates any handling damage to the knurl tips. The knurls act as stress relievers, exhibit lower stresses, and protect the base glass from becoming damaged (see Figure 14).

CONCLUSION

The glass container industry has come a long way since the wake-up call of the 1970s. Following an initial decline in the market, the industry has stabilized. In fact, the industry has been steadily growing (1). Today, nearly 300 billion containers are produced worldwide on an annual basis. This is due in part to the numerous new designs and markets. However, a weight reduction of more than 30% in the past 20 to 30 years has led glass packages to be economical and competitively priced. The task of achieving lightweight containers was not straightforward, and many factors had to be taken into consideration. Investments into technology for improved melting, forming, and coating were required. This provided larger and more efficient furnaces. Larger and faster IS forming machines that utilized the NNPB technology replaced the smaller, less efficient machines. Improvement to the surface treatment technology provided higher design strength. Investments into new equipment, plants, and warehouses were necessary. However, it is unlikely that the successes in the glass container industry could have been achieved without the understanding of the importance of design on performance.

ACKNOWLEDGEMENTS

Special thanks to the Glass Packaging Institute for the photographs in Figures 1, 2, 3, and 12, and as well as to William Slusser for his insightful comments and discussions.

BIBLIOGRAPHY

1. *Glass Packaging Essentials, A Multimedia Resource*, 2nd edition, Glass Packaging Institute, Alexandria, VA, 2004. <http://www.gpi.org/education/materials/>.
2. *Glass: Clear Vision for a Bright Future*, U.S. Department of Energy, April, 1996; <http://www1.eere. energy.gov/industry/glass/pdfs/glass_vision.pdf>
3. A. L. Griff, in *The Wiley Encyclopedia of Packaging Technology,* John Wiley & Sons, New York, 1986, pp. 121–124.
4. J. L. Pellegrino, *Energy and Environmental Profile of the U.S. Glass Industry,* U.S. Department of Energy, April 2002; <http://www1.eere.energy.gov/industry/glass/pdfs/glass2002profile.pdf>
5. R. Chinella, *Glass Industry* **April**, 14 (1990).
6. V. H. Rawson and G. Turton, *Glastech. Ber.* **46**, 28 (1973).
7. *algor.com / news*, December 4, 2003; <http://www.algor.com/news_pub/news_releases/2003/agr /default.asp>
8. B. Moody, *Packaging in Glass,* Hutchinson London, 1977 pp. 361–363.
9. M. W. Davis, *Glass Technology* **34**(4), 163–165 (1993).
10. R. E. Mould, *Fundam. Phenom. Mater. Sci*. **4**, 119 (1967).
11. H. P. Williams, *Glass Technol*. **16**(2), 34 (1975).
12. H. B. Lingenberg, *Brauwelt* **135**(26), 1283 (1995).
13. "IFORM," Rockfield Software Ltd. Technium, Swansea, SA1 8PH, West Glamorgan, U.K.
14. M. W. Davis, *Int. Glass J.* **99**, 42–46 (1999).
15. A. P. Boresi, O. M. Sidebottom, F. B. Seely, and J. O. Smith, *Advanced Mechanics of Materials*, 3rd edition, John Wiley & Sons, New York, 1978, pp. 581–627.
16. M. W. Davis, and A. R. Shott, *Glass* **June** 221–222 (1995).
17. C. E. Mongan, Jr., U.S. Patent 2338071 (to Hartford Empire Co.) 1943.
18. Pennekamp, *Glass Industries*, **January**, 32 (1999).
19. M. W. Davis, and A. R. Shott, *Glastech. Ber.* **66**(9), 221–226 (1993).

HAZARD ANALYSIS AND CRITICAL CONTROL POINTS

Barbara Blakistone
National Fisheries Institute,
McLean, Virginia
Yuhuan Chen
Grocery Manufacturers
Association, Washington, D.C.

ORIGIN AND HISTORY OF HACCP

Concepts underlying the Hazard Analysis and Critical Control Point (HACCP) system originated in the 1960s to establish risk in quality assurance systems of the National Aeronautics and Space Administration (NASA) (1). The concept was presented to the public at the 1971 National Conference on Food Protection (1, 2). The Pillsbury Company, in response to the food safety requirements imposed by NASA for space foods produced for manned space flights, pioneered using HACCP principles for food protection and published the first text on the subject in 1973 (3). While interest was strong in the early 1970's, HACCP was not widely incorporated into the food industry, in part due to lack of guidance and difficulties industry encountered in implementation. The 1970s were a decade of trial, error, and debate between the regulatory agencies and industy. However, in 1985 a Subcommittee of the Food Protection Committee of the National Academy of Sciences (NAS) resolved the frustrations of all with a report (*An Evaluation of the Role of Microbiological Criteria for Foods and Food Ingredients*) that included a strong endorsement of HACCP as a preventive system for control of microbiological hazards (4). As a result of this recommendation, the National Advisory Committee on Microbiological Criteria for Foods (NACMCF) was formed in 1987 to advise the Secretaries of Agriculture, Commerce, Defense, and Health and Human Services (5). In 1989 NACMCF published its first major document eventually entitled *HACCP Principles for Food Production* (6), which was updated in 1992 and published as an article with the title "Hazard Analysis and Critical Control Point System" (7). Another revision of the document took place in 1997, and the document was published in 1998 as an article with the title "Hazard Anlaysis and Critical Control Point Principles and Application Guidelines" (8).

The NACMCF documents have formed the basis for HACCP application in the United States. On the international level, the Codex Alimentarius Committee on Food Hygiene has worked in concert with the NACMCF to develop HACCP principles and guidelines for application worldwide. In 2003, Codex adopted the latest version of its HACCP document (9), which shares many similarities with the 1997 NACMCF document. The NACMCF documents were used by the USDA Food Safety and Inspection Service (FSIS) in promulgating HACCP regulations for meat and poultry products (10) and by the Food and Drug Administration (FDA) in promulgating HACCP regulations for seafood products (11) and for juice products (12).

The first commodity to be regulated by HACCP was seafood based on final regulations published in the Federal Register on December 18, 1995, which became effective on December 18, 1997. The regulations require processors of fish and fishery products to have on file a HACCP plan for their operations. Based on the final regulations, FDA publishes *Fish & Fishery Products Hazards & Controls Guidance* every two to three years (13). A new Seafood Hazards Guide is expected in 2008 which will include a number of additions and modifications, a few of which are expected to be:

- Addition of a chapter on post-harvest processing technologies (i.e., hydrostatic pressure, Individually Quick Frozen (IQF) with extended cold storage, mild heat, and irradiation) affecting pathogen survival in mollusks.
- Information will be detailed on time–temperature indicators (TTIs) and how they must function.
- Implementation of HACCP comments from the Seafood HACCP Alliance for Education and Training based on their program for the seafood industry and federal, state, and local inspectors.
- More guidance on how to address allergens.
- Recommendations on calibration of temperature-sensing devices.

HACCP CONCEPT

HACCP is a preventive system for assuring the safe production of foods. It is based on a common-sense application of technical and scientific principles to the food production process and system of distribution. The principles of HACCP are applicable to all phases of food production, including basic agriculture, food preparation and handling, food processing, food packaging, food service, distribution systems, and consumer handling and use.

The most basic concept underlying HACCP is the prevention of occurrence of hazards rather than the inspection of finished products for the hazards. A grower, processor, or distributor, when they have gathered sufficient information concerning that segment of the food system, should be able to locate where and how a food safety problem may occur. If the "where" and "how" are known, prevention is simplified. A HACCP program deals with control of food safety hazards originating from the ingredients, product processing, and packaging. The goals of the program are to make the product safe to consume *and* be able to prove that the product presents minimum risk to consumers. The where and how are included in the *HA* (hazard analysis) part of HACCP. The focus on control of processes and conditions is included in the second

Table 1. Examples of Chemicals Used in Food Production and Processing

Point of Use	Types of Chemicals
Growing crops	Pesticides, herbicides, defoliants
Raising livestock	Growth hormones, antibiotics
Production	Food additives, processing aids
Plant maintenance	Lubricants, paints
Plant sanitation	Cleaners, sanitizing agents, pesticides
Packaging	Adhesives resins, surfactants, defoaming agents, slimicides, polymers

principle of identifying the *CCP* (critical control point). Documentation and verification are integral to hazard analysis and establishing CCP. Flowing from this basic concept, HACCP is simply a methodical and systematic application of the appropriate science and technology to plan, control, and document the safe production of foods.

HACCP covers three types of potential food safety hazards that could lead to a health risk—biological, physical, and chemical—whether they are naturally occurring in the food, contributed by the environment, or generated by something in the manufacturing process. Chemical hazards will be of primary interest to packagers, although, of course, chemicals are used at numerous points in the food production chain (see Table 1). While these types of chemicals do not usually represent health hazards when used properly, some of them are capable of causing illness or even death when used improperly. Another potential hazard of interest to packagers is a physical hazard such as glass shards associated with the use of glass bottles as packaging.

PRINCIPLES OF HACCP

NACMCF (8) recommends that the HACCP system should be built upon a solid foundation of prerequisite programs (e.g., Good Manufacturing Practices, Sanitation Standard Operating Procedures, supplier approval program). In preparation for developing an HACCP plan, NACMCF recommends that five preliminary tasks be accomplished to facilitate the application of HACCP principles to a specific product and process. These preliminary tasks are: (a) assemble the HACCP team, (b) describe the food and its method of distribution, (c) identify the intended use and consumers of the food, (d) develop a flow diagram that describes the process, and (e) verify the flow diagram.

According to the NACMCF 1997 document (8), HACCP is a systematic approach to food safety consisting of seven priciples:

Principle 1: Conduct a Hazard Analysis

With information from the preliminary tasks, the HACCP team conducts a hazard analysis to (a) determine significant food safety hazards associated with the product and (b) identify appropriate control mesaures for those significant hazards. The hazard analysis consists of two stages: hazard identification and hazard evaluation. In the hazard identification stage, the HACCP team prepares a list of potential biological, chemical, and physical hazards that may be introduced, enhanced, or controlled at each of the steps in the flow diagram, including potential hazards associated with ingredients and packaging materials. The HACCP team then conducts a hazard evaluation, based on the severity of the potential hazard and its likelihood of occurrence, to determine which of the potential hazards are significant and must be addressed in the HACCP plan. In other words, the hazard anlysis identifies the steps in the process where hazards of potential significance can occur and thus warrants control in the HACCP plan. Table 2 enumerates examples of packaging questions that may be considered during the hazard analysis.

For inclusion in the list of significant hazards and thus the HACCP plan, a hazard must be of such a nature that its prevention, elimination, or reduction to an acceptable level is essential to the production of a safe food (8, 14). Potential hazards that are of a low severity and/or not likely to occur (i.e., low risk potential hazards) would not require further consideration when developing the HACCP plan. Low-risk hazards, however, should not be dismissed as insignificant to the operation and may need to be addressed by other means, for example, by the total quality management (TQM) team.

The HACCP team must then consider what control measures, if any, exist that can be applied for control of each significant hazard. If a significant hazard is identified in the hazard analysis but no control measure exists in the process, the HACCP team must modify the process and product so that a control measure can be applied. Control measures are physical, chemical, or other factors that can be used to control an identified significant health hazard. More than one control measure may be required to control a specific hazard. More than one hazard may be controlled by a specified control measure. Potential chemical hazards

Table 2. Examples of Packaging-Related Questions to Be Considered in a Hazard Analysis

Does the method of packaging affect the multiplication of microbial pathogens and/or the formation of toxins?
Is the package clearly labeled "Keep refrigerated for safety" if this is needed for safety?
Does the package include instructions for the safe handling and preparation of the food by the end user (e.g., validated cooking instruction)?
Is the packaging material resistant to damage, thereby preventing the entrance of microbial contamination?
Are tamper-evident packaging features used?
Is each package and case legibly and accurately coded?
Does each package contain the proper label?
Could the packaging materials contribute any potential physical hazard (e.g., glass) to the product during processing?
Could the packaging materials contribute any chemical compound to the product that may make the product unsafe to consume?

applicable to packaging that the HACCP team may consider during the analysis include the inks, indirect additives, and prohibited substances in packaged ingredients and packaging materials if the intended use is food packaging. The points of control may be, for example, prior to receipt, and the control measures may be compliance with specifications, letters of guarantee, vendor certification, and/or approved uses listed in the Code of Federal Regulations. In a food plant producing canned salmon, a significant biological hazard is a pathogen such as *Clostridium botulinum* in the salmon. Retorting (a point of control) using the appropriate scheduled process is a control measure that can be used to eliminate the pathogen hazard. In the packaging step (a point of control), proper double seaming will prevent recontamination of the product with potential pathogens from the processing plant environment, as well as during distribution, storage, and retail and in the consumer's home. The control measure is forming a proper double seam to prevent leakage and recontamination.

Principle 2: Determine the Critical Control Points (CCPs)

A *critical control point* is defined as a step in the process at which control can be applied and is essential to prevent or eliminate a food safety hazard or reduce it to an accpetable level. The HACCP team determines CCPs based on the outcomes of the hazard analysis. An ideal CCP has the following characteristics: (a) critical limits that are supported by scientific data from research and the technical literature; (b) critical limits that are specific, quantifiable or otherwise measurable, and provide the basis for a yes/no decision on acceptability of product; (c) technology for controlling the process at a CCP that is readily available and at reasonable cost; (d) adequate monitoring (preferably continuous) and automatic adjustment of the operation to maintain control; and (e) historical point of control. All significant hazards identified by the HACCP team during the hazard analysis must be addressed with at least one CCP.

Examples of CCPs may include cooking, chilling, acidification, packaging of processed foods, labeling, specific sanitation procedures, product formulation control, prevention of cross-contamination, and certain aspects of employee and environmental hygiene.

Principle 3: Establish Critical Limits

A *critical limit* is defined as maximum and/or minimum value to which a biological, chemical, or physical parameter must be controlled at a CCP to prevent, eliminate, or reduce to an acceptable level the occurrence of a food safety hazard. As HACCP evolves, a critical limit can also include the presence of an attribute that is not necessarily a quantitative value (e.g., products passing through a functioning metal detector). Each CCP will have one or more control measures that must be properly controlled to assure prevention, elimination, or reduction of hazards to acceptable levels. Each control measure has associated critical limits that serve as boundaries of safety for each CCP. Critical limits may be set such as temperature, time, physical dimensions, sealing conditions, humidity, moisture level, water activity (a_w), pH, titratable acidity, salt concentration, available chlorine, viscosity, presence or concentration of preservatives, and sometimes attributes such as presence of an intact screen of appropriate pore sizes and a functioning metal detector with appropriate sensitivity (14). Critical limits may be derived from sources such as regulatory standards and guidelines, literature review, experimental studies, and experts. The food industry is responsible for engaging competent authorities to validate that the critical limits will control the identified hazard.

Canning operations offer an example of a critical limit for packaging. The Low Acid Canned Food Regulations (Title 21, Code of Federal Regulations Part 113) require that cans should be examined for presence of visual defects, and cans should be periodically removed from the line and torn down to verify that can seam measurements are within specifications (15). If the HACCP team determines that recontamination of product by pathogens due to seam defect and leakage is a hazard reasonably likely to occur after retoring, then a control measure must be identified to address the hazard, for example, in the form of proper seams on cans to protect consumers from foodborne illness, and a CCP would be established at the sealing machine. The monitoring activities are the visual observation and the seam teardown and double-seam measurements. The seam measurement would be compared to the minimum acceptable dimensions (critical limits) specified by the container supplier. Another example of a critical limit is the time and temperature for the retorting of canned salmon. At the retorting CCP, the process must be designed to eliminate the heat-resistant spore-forming pathogen, *Clostridium botulinum,* which is reasonably expected to be present in the incoming raw salmon. Technical development of the appropriate critical limit(s) requires accurate information on the operation of the retort, heating rate of the product, and heat resistance of *Clostridium botulinum*.

A partial hazard analysis for canned salmon is shown in Table 3, which also illustrates how the first three principles of HACCP may be documented by the team.

Principle 4: Establish Monitoring Procedures

In the monitoring process a planned sequence of observations or measurements is conducted to assess whether a CCP is under control and to produce an accurate record for future use in verification. Monitoring serves three main purposes:

1. Monitoring is essential to food safety management in that it tracks the operation of the system. If monitoring indicates that there is a trend toward loss of control (i.e., exceeding a target level), then action can be taken to bring the process back into control before a deviation from a critical limit occurs.
2. Monitoring is used to determine when there is loss of control and a deviation occurs at a CCP–that is, exceeding or not meeting the critical limit. When a deviation to a critical limit occurs, corrective action must be taken.
3. Monitoring provides written documentation for use in verification of the HACCP plan.

Table 3. Partial Hazard Analysis, CCP and Critical Limits for Canned Salmon[a]

Critical Control Point (CCP)	Hazard(s) to Be Addressed in HACCP Plan	Control Measures	Critical Limits
Processing—processes designed to provide commercial sterility	*C. botulinum*	Retorting	Minimum 250°F for 3 min for product Other critical factors as specified by processing authority
Sealing of containers[b]	*C. botulinum* due to recontamination[c]	Creating and maintaining hermetic seal	No visible cutovers, seam sharpness, false seams, deadheading, product overlapping the flange, product leakage, or other visual defects Cover hook: minimum 0.70 in., body hook 0.072–0.088 in.; width: maximum 0.125 in.; thickness 0.052–0.058 in.; tightness minimum 70%
Cooling of containers—applies to water-cooled cans only	Pathogens due to recontamination	Chlorination	Measurable residual chlorine at discharge

[a] *Note*: The partial HACCP plan in this table is for illustrative purposes only and it is not intended to replace the processor's hazard analysis and HACCP plan development.

[b] Source for crticial limits at this CCP: FDA's *Fish and Fishery Products Hazards and Controls Guidance*, 3rd edition (June 2001), except that the tightness value (i.e., the percent of the cover hook that is free of wrinkles) is based on an industry guideline.

[c] Some processors may conclude in their hazard analysis that recontamination with *C. botulinum* due to can defects is a hazard likely to occur in the absence of control, in light of at least two botulism outbreaks associated with recontaminated canned salmon. In this case, critical limits are established for the CCP at the sealing step to control the hazard.

Examples of monitoring activities include:

- Visual observations
- Temperature
- Time
- pH
- Moisture level
- Can teardown and seam dimensions

Principle 5: Establish Corrective Actions

The HACCP system for food safety management is designed to identify health hazards and to establish strategies to prevent, eliminate, or reduce their occurrence. However, ideal circumstances do not always prevail, and deviations from established processes may occur. Corrective actions are designed to prevent products that may be hazardous from leaving the process facility. When monitoring indicates that there is a deviation from an established critical limit, corrective actions must be taken. The first step is to bring the process and the CCP under control by determining and correcting the cause of noncompliance. Second, put all product on hold until determination has been made on the safety of the product to facilitate appropriate product disposition. A third component is to prepare records that document the corrective actions taken. Because of the diversity of possible deviations in a food process, specific corrective action procedures cannot always be developed for every incident. However, a plan should be developed that addresses the process, the product, and the recordkeeping components, with procedures developed in advance for those deviation scenarios that are likely to occur or are expected. The actions taken must demonstrate that the CCP has been brought under control. Individuals who have a thorough understanding of the process, product, and HACCP plan are to be assigned responsibility for taking corrective actions. The corrective action plan should be documented in the HACCP plan.

Principle 6: Establish Verification Procedures

Verification is defined as those activities, other than monitoring, that determine the validity of the HACCP plan and that the HACCP system is operating according to the plan. Monitoring is a distinct activity from verification. For example, verification may be calibration of a thermometer once per day while an example of monitoring is continuous chart recording of the temperature of the scheduled process. The NAS (4) pointed out that the major infusion of science in a HACCP system centers on proper identification of the hazards, critical control points, critical limits, and instituting proper verification procedures. An example of a verification activity is the scientific or technical process to ensure that critical limits at CCPs are adequate and effective. This is sometimes referred to as *validation* of the HACCP plan. Verification activities should take place during the development and implementation of the HACCP plan (14). There are a few aspects involved in the verification process. An important aspect of verification is the initial validation to determine that the HACCP plan is scientifically and technically sound and that the HACCP plan, when properly implemented, will be effective in controlling food safety hazards. The validation process ensures that the HACCP plan in the facility is functioning effectively. Another aspect of verification is evaluating whether the HACCP system is implemented according to the HACCP plan. This aspect includes ongoing verification of CCPs that involves evaluating that day-to-day compliance of the monitoring and other activities specified in the HACCP plan at each CCP as well as a periodic HACCP system compliance audit. A third aspect of verification consists of periodic validations or reassessments, independent of audits or other verification procedures, that must be performed to ensure the accuracy and adequancy of the

HACCP plan. A fourth aspect of verification deals with the government's regulatory responsibility and actions to ensure that the HACCP system in the facility is functioning satisfactorily. FSIS and FDA conduct risk-based inspections of facilities producing meat and poultry products and seafood and juice products, respectively, which include verification of the HACCP plan.

Principle 7: Establish Record-Keeping and Documentation Procedures

Record-keeping provides written confirmation of the hazard analysis, the HACCP plan, and the implementation of the HACCP plan. HACCP records provide written data for review, and records must be maintained for the required period of time. Well-maintained records substantiate that the HACCP plan is being followed and that requirements in the HACCP plan are being met during production; HACCP records help document the safety of the products being produced.

The approved HACCP plan and associated records must be on file at the food establishment. Generally, HACCP records include the following:

1. Summary of the hazard analysis.
2. The HACCP plan. NACMCF (8) recommends that HACCP plan records include:
   a. A list of the HACCP team and assigned responsibilities.
   b. A description of the product, its distribution, intended use, and customer.
   c. A verified flow diagram for the manufacturing process with CCPs indicated.
   d. A HACCP plan summary table that contains information tabulated in Table 4, including the CCPs, the hazards to be addressed in the HACCP plan at each CCP, critical limits, monitoring procedures, corrective action plan, verification procedures, and record-keeping.
3. Supporting documentation.
4. Daily operational records.

HACCP AND PACKAGING

HACCP plan requirements in the manufacture of packaging materials cannot be known until a hazard analysis has been conducted. Methodical steps of the HACCP process will prove most helpful in assessing the safety versus the quality needs of the manufacturing plant. The supplier may need records for its buyers that such an assessment has been conducted even if no hazards have been found during the hazard anlysis. Critical steps in quality may come under different programs—for example, ISO. Grocery Manufacturers Association and the National Fisheries Institute favor interpreting HACCP as a program that focuses only on food safety hazards. Thus, in the case of milk carton manufacture, paperboard stock is

Table 4. HACCP Plan Master Sheet

Critical Control Point (CCP)	Hazard to be Addressed in HACCP Plan	Critical Limits for Each Control Measure	Monitoring				Corrective Action	Verification Activities	Record-Keeping Procedures
			What	How	Frequency	Who			

Source: Scott and Stevenson (14).

required by the Pasteurized Milk Ordinances (16) to have no more than 50 bacterial colonies per 8 square inches. By our interpretation, this would be a quality specification and not a HACCP CCP, if historical data show that these are spoilage microorganisms rather than pathogens that are likely to cause illness.

End use of the packaging materials may lead to an exception to the above rule that HACCP is not needed in package manufacture. Some examples follow:

- Active packaging is now a very viable area of research, and much of that research has focused on incorporating into the material types of antimicrobials that are efficacious against microorganisms. If such a compound/product is used in commercial packaging and is itself an allergen to some populations, the labeling step may become a CCP, if the HACCP team concludes in their hazard analysis that the undeclared allergen is a hazard likely to occur. In this case, the CCP is the label, the hazard is the undeclared allergen, and the critical limit is the proper notation on the label with visual monitoring by the label operator or label scanner for the correct label each time the labels are loaded. In some cases, the HACCP team may conclude that the hazard of an undeclared allergen is not reasonably likely to occur due to a labeling prerequisite program in place; in this case, no CCP would be needed.
- Gas combinations in modified atmosphere packaging (MAP) may also prove critical in outgrowth of pathogens because oxygen concentrations below 2–3% allow or enhance the growth of anaerobic organisms such as *Clostridium botulinum*. Oxygen concentration would be a CCP in the MAP-packaging of mushrooms where growth of *Clostridium botulinum* is a hazard reasonably likley to occur, for example. A special case in fresh seafood packaging is vacuum packaging. As noted in the Seafood Hazards Guide (13), packaging material with an oxygen transmission rate (OTR) of 10,000 cc/m^2/24 h has permeability sufficient to allow aerobic spoilage to occur before toxin can be produced. Selection of proper gas combinations and OTRs are CCPs in the cases of certain commodities, where growth of anaerobic pathogens such as *Clostridium botulinum* is a hazard reasonably likely to occur in the absence of control.

SUMMARY

HACCP is a systematic approach to assuring the safety of food products based on the concept of prevention. The HACCP program is widely used in the food industry in the United States as well as worldwide. Although the seven HACCP principles are well-developed and application guidelines have been developed and revised based on experience gained during HACCP implementation in the last several decades, there is no universal formula for putting together the specific details of a HACCP plan. The plan must be specific to each facility and be dynamic, allowing for modifications to production, substitution of new ingredients and new materials (including specialized packaging materials and packaging steps), and development of new products. The plan is participatory at all levels of management, both in formulating and managing the plan. The strength in an HACCP program is in providing a risk management framework that a company can use effectively to organize and manage the safety of the products which are produced.

BIBLIOGRAPHY

1. D. A. Corlett, Jr., *HACCP User's Manual*, Aspen Publishers, Gaithersburg, MD, 1998.
2. DHEW, *Proceedings of the 1971 National Conference on Food Protection*, U.S. Dept. Health, Education, and Welfare, Public Health Service, Washington, DC, 1971.
3. Pillsbury Company, *Food Safety through the Hazard Analysis Critical Control Point System*, Contract No. FDA 72-59, Research and Development Department, The Pillsbury Company, Minneapolis, MN, 1973.
4. National Academy of Sciences, *An Evaluation of the Role of Microbiological Criteria for Foods and Food Ingredients*, National Academy Press, Washington, DC, 1985.
5. M. D. Pierson and D. A. Corlett, Jr., eds., *HACCP, Principles and Applications,* Van Nostrand Reinhold, New York, 1992.
6. NACMCF (National Advisory Committee on Microbiological Criteria for Foods), *HACCP Principles for Food Production*, USDA, FSIS, Washington, DC, 1989.
7. NACMCF, "Hazard Analysis and Critical Control Point System," *Int. J. Food Microbiol*. **16**, 1 (1992).
8. NACMCF, "Hazard Anlaysis and Critical Control Point Principles and Application Guidelines," *J. Food Prot.* **61**, 762–775 (1998).
9. Codex, "Hazard Anlaysis and Critical Control Point (HACCP) System and Guidelines for Its Application," Annex to the *Recommended International Code of Practice General Principles of Food Hygiene*, FAO/WHO Codex Alimentarius Commission, Rome, 2003.
10. U.S. Department of Agriculture/Food Safety and Inspection Service (FSIS), "Hazard Analysis and Critical Control Point (HACCP) Systems; Final Rule," 9 CFR Part 417, *Federal Register* **61**, 38868 (July 25, 1996).
11. U.S. Department of Health and Human Services/Food and Drug Administration (FDA), "Procedures for the Safe and Sanitary Processing and Importing of Fish and Fishery Products; Final Rule," 21 CFR Part 123, *Federal Register* **60**, 65197 (December 18, 1995).
12. U.S. FDA, "Hazard Analysis and Critical Control Point (HACCP); Procedures for the Safe and Sanitary Processing and Importing of Juice; Final Rule," 21 CFR Part 120, *Federal Register* **66**, 6197 (January 19, 2001).
13. U.S. FDA/Center for Food Safety and Applied Nutrition, *Fish & Fisheries Products Hazards & Controls Guidance*, 3rd edition (online), Chapter 13, http://www.cfsan.fda.gov/~comm/haccp4.html, 2001.
14. V. N. Scott and K. E. Stevenson, eds. *HACCP: A Systematic Approach to Food Safety, A Comprehensive Manual,* 4th edition, Food Products Association, Washington, DC, 2006.
15. U.S. FDA, *Thermally Processed Low-Acid Foods Packaged in Hermetically Sealed Containers*, Title 21, Code of Federal Regulations, Part 113, U.S. Government Printing Office, Washington, DC, 1992.

16. U.S. FDA/Center for Food Safety and Applied Nutrition, Grade “A” Pasteurized Milk Ordinance, 2001 Revision, Appendix J, Part C (online), http://www.cfsan.fda.gov/~ear/pmo01j-k.html.

HIGH-VOLTAGE LEAK DETECTION (HVLD) TECHNIQUE FOR HERMETICALLY SEALED PACKAGES

Yoon S. Song
United States Food and Drug Administration, Office of Food Safety (OFS), Process Engineering Branch,
Summit-Argo, Illinois

INTRODUCTION

High-voltage leak detection (HVLD) is one of the emerging technologies for inspecting package defects and tampering. HVLD operates by applying a high-voltage potential to electrically conductive products inside non- or semiconductive package materials. Pinholes are identified when electrical discharges are detected between products and device electrodes. The HVLD system with different frequencies has been successfully validated and used for years to test the integrity of glass ampoules and vials in the pharmaceutical industry (1, 2) and recently was introduced into the food industry within the United States. It has been demonstrated that this detection system is a powerful tool to detect pinholes in vacuum pouches containing frankfurters. Therefore, the applicability of this high-voltage technique to various containers of different types and compositions is of great interest to the industry.

PRINCIPLES

The HVLD system is composed of four unique elements: high-voltage power generator, support electrode, inspection electrode, and a detector (Figure 1). The power generator subjects the outside of a test package to a certain predetermined high voltage (0.1–25 kV). In typical HVLD systems, a package wall is nearly nonconductive and thus can be regarded as the dielectricum of a condenser. When high voltage is applied to the support electrode on which a test package is placed, it electrifies product particles inside the package. While high voltages are applied, the surface of a test package is scanned with an inspection electrode as shown in Figure 2. In the presence of a leak, electrons are discharged through the hole. The detector can then measure current and/or voltage discharges through the inspection electrode. A data acquisition system in connection with an oscilloscope is used to measure voltage or current profiles discharged from a package. When voltage discharges are measured, V_{10} (kV) value, a high-voltage applied to the supporting electrode when voltage discharge measured from the inspection electrode exceeds the threshold value of 10 V,

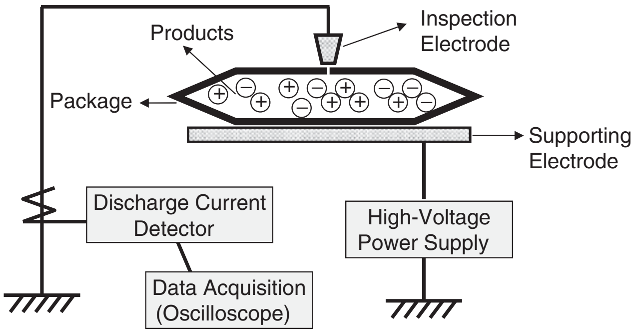

Figure 1. Schematic diagram of HVLD system setup.

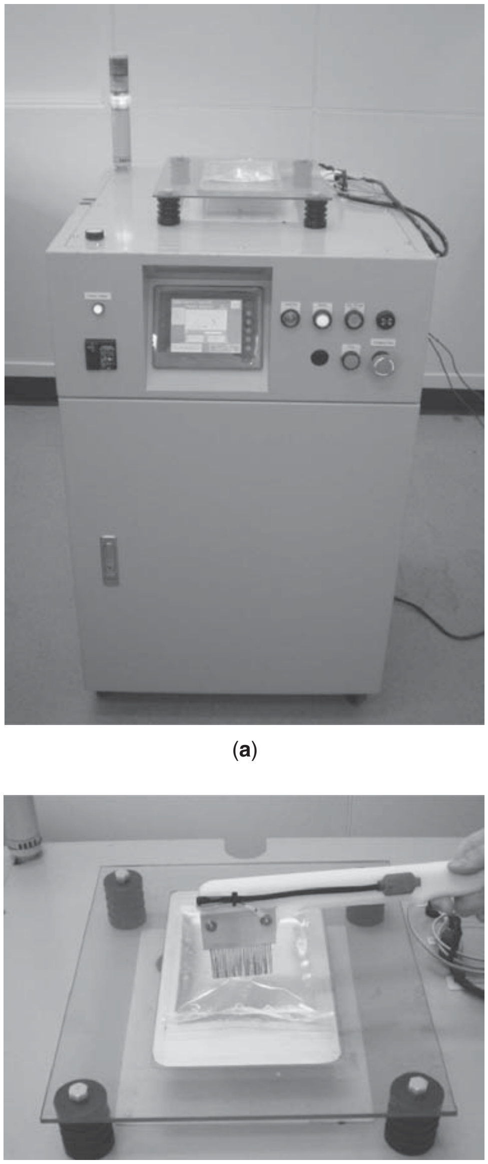

(a)

(b)

Figure 2. (**a**) The front and (**b**) top views of the Type-JH manual HVLD unit (see text for explanation of operation).

can be used as an indication of the detection. When discharge current is monitored, the ability of the HVLD to detect a leak is largely dependent on the gain setting. With the gain control, a minimum current measured at a constant high voltage applied can be adjusted and optimized to within a measurable range to accommodate the most important factors that could influence the detection limit during a leak test.

FACTORS OF INFLUENCE

The ability of the HVLD system to detect leaks can be dependent upon various factors of product, package, and defect. Jain and Song (3, 4) conducted a set of experiments to evaluate the significance of various processing variables on detection of pinholes in flexible pouches using a manual HVLD unit (Model DCC-1-AC, Jovan Electronics Corp., Japan) (Figure 2). Several critical variables, such as thickness (2.5, 4.5, 6.0 mil), structure (plastic, paper and metallized laminates), height (0.3, 0.7, 1.1 in. from a top of the support electrode where a package is placed on), contact surface area (5, 11, 22, 33 in^2), and dielectric constant (ε) (1.63, 1.87, 2.01, 2.34) of pouches, volume (100, 200, 300 mL), electrical conductivity (κ) (0.7, 1.5, 8.5, 10.8 mS/cm), and type (liquid, semisolid (10% pectin), solid (0.85A_w pectin)) of model products, and location (0, 1.9, 3.7 in. from a package center) and diameter (10, 20, 30, 40, 50 μm) of laser-drilled pinholes, were tested.

Effects of the critical variables on detection of 50-μm pinholes in polypropylene (PP)/Nylon/PP laminated pouches containing liquid model products are presented in Figures 3 and 4 (3). In general, the greater the contact surface area of packages and the higher the electrical conductivity of products, the voltage required to detect package defects is lower ($p < 0.05$). The statistical analysis of data revealed that height and dielectric constant of packages, product volume, and defect location were not significant factors affecting detection by the HVLD unit within the ranges tested ($p > 0.05$), but HVLD responses were significantly affected by thickness and surface area of packages and by electrical conductivity of products ($p < 0.05$). Results from a full factorial design experiment with two levels and four factors (surface area, 5 and 33 in.^{2}; film thickness, 2.5 and 4.5 mil; product conductivity, 1.5 and 10.8 mS/cm; pinhole size, 10 and 50 μm) indicated that, among the independent variables, surface area had the most significant effect followed by film thickness, pinhole size, and product conductivity

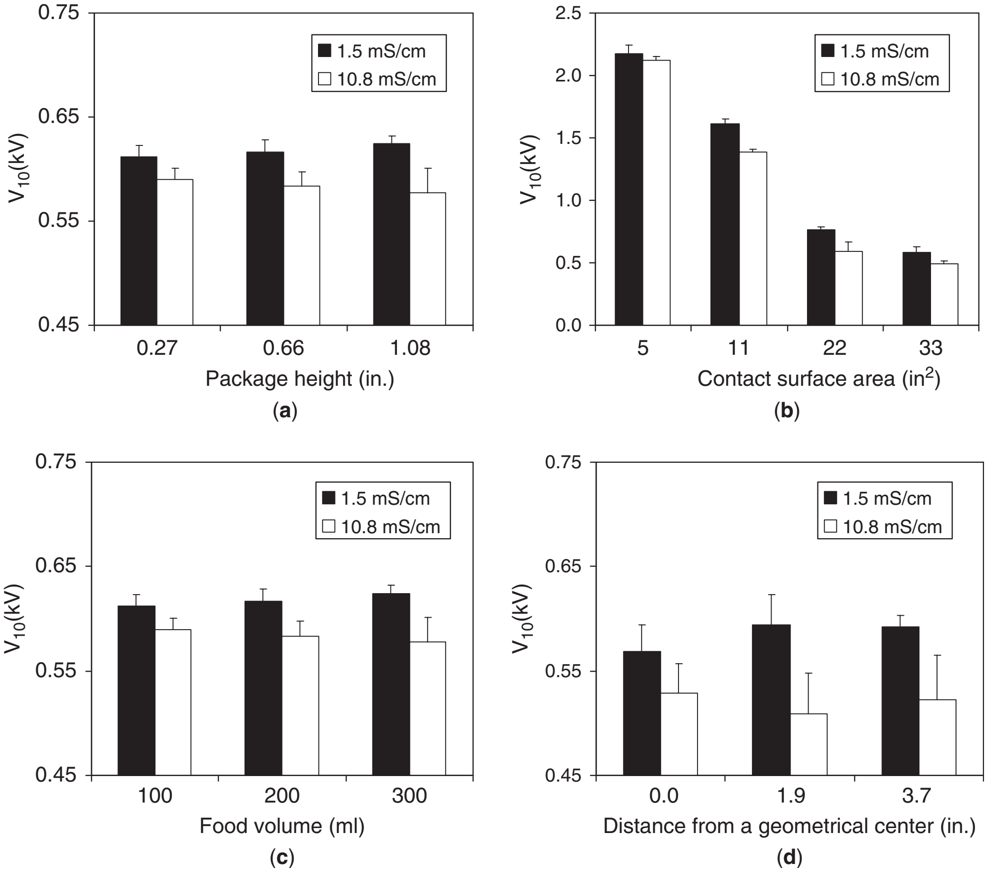

Figure 3. Effects of (**a**) package height, (**b**) package contact surface area, (**c**) product volume, and (**d**) defect location on V_{10} values for PP/nylon/PP laminated pouches ($\varepsilon = 2.01$) with 50-μm pinholes, containing 100, 200, and 300 mL of liquid model products ($\kappa = 1.5$ and 10.8 mS/cm).

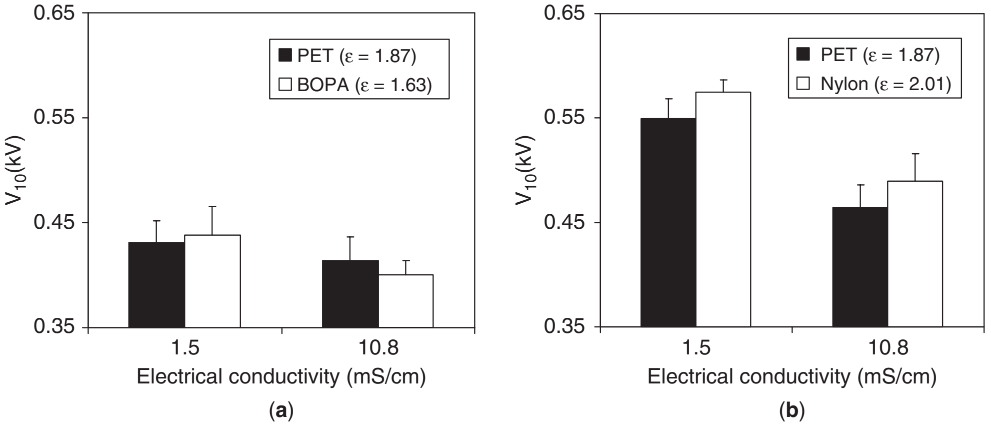

Figure 4. Effects of dielectric constant (ε) and electrical conductivity (κ) on V_{10} values for (**a**) 2.5- and (**b**) 4.5-mil-thick plastic pouches (PET = PET/PE; BOPA = BOPA/PE; Nylon = PP/nylon/PP) with 50-μm pinholes, containing 100 mL of liquid model products.

($p < 0.01$) (4). Strong interactions between those variables were also observed ($p < 0.01$). In particular, two evident interactions—between film surface area and film thickness and between product conductivity and film thickness—contributed to the factorial model at a significant level. HVLD responses to both paper/PP laminated pouches and metallized pouches for different processing variables were comparable with those from plastic laminated pouches containing liquid model products. Similar results were also reported for semisolid and solid model products.

Moll et al. (5) validated the HVLD technique for 100% inspection of low-density polyethylene (LDPE) ampoules by using a fully automated online unit (Model 920-004, Rommelag, Germany). Factors such as detector geometry, electrical conductivity of semisolid model products (7.8–8.5 mS/cm), and wall thickness of ampoules (20–30 mil) were found to be critical in detecting defective ampoules with 5- to 200-μm pinholes. They also suggested that the temperature and relative humidity at the site of testing, along with the speed of conveyor belt carrying ampoules, may have an influence on equipment sensitivity.

LIMIT OF DETECTION

It has been reported that for plastic pouches, the HVLD can detect pinholes as small as 10 μm, even under worst-scenario conditions, such as 4.5-mil film thickness, contact surface area of 5 in.^{2}, and electrical conductivities of 0.7 and 1.5 mS/cm for semisolid and liquid products, respectively (3). Limits of detections for liquid, semisolid, and solid products were 10, 10, and 50 μm, respectively. For metallized pouches, the HVLD can also detect pinholes as small as 10 μm, even under worst-scenario conditions, such as 6.0-mil film thickness, contact surface area of 5 in.^{2}, A_w of 0.85 for solid products, and electrical conductivities of 0.7 and 1.5 mS/cm for semisolid and liquid products, respectively. The limit of detection was 10 μm for liquid, semisolid, and solid products. The HVLD technique can also reliably detect 5- to 10-μm pinholes in LDPE ampoules containing a medium-viscosity hydrogel with conductivity of 7.8 mS/cm (5).

CONCLUSIONS

The HVLD is an innovative testing system for fully automatic detection of package leaks and tampering. It requires that products inside a package be in direct contact with packaging material's surface where the inspection electrode is applied. The site on the package at which leaks and/or tampering have occurred can be instantly and effectively identified when electrical discharges are detected between a product and device electrodes. Due to high voltages applied, however, a defective package may be further damaged, as evidenced by post detection results where 5- to 10-μm pinholes were widened to 50–60 μm (5). The HVLD technique is capable of detecting pinholes less than 10 μm in diameter. Package surface area, thickness and geometry, headspace, product type, and electrical conductivity are parameters requiring testing to determine the necessary system configuration. Parameters that do not appear to be significant barriers to the use of HVLD were height and dielectric constant of package, produce volume, and location of pinhole. It can be concluded that the HVLD technique is a promising nondestructive and online method to detect pinhole defects, which may be applicable to a wide range of hermetically sealed packages.

BIBLIOGRAPHY

1. P. Ruffieux, *Pharm. Ind.* **47**, 976 (1985).
2. H. Barnickel, *Pharm. Ind.* **48**, 388 (1986).
3. B. Jain, and Y. Song, Evaluation of a Non-destructive High Voltage Technique for the Detection of Pinholes in Flexible Pouches for Foods, Poster at IFT Annual Meeting, Chicago, IL, 2007.
4. B. Jain, and Y. Song, Validation of a Non-Destructive High Voltage Technique for the Detection of Pinhole Defects in Food Pouches, Poster at IFT Annual Meeting, New Orleans, LA, 2008.
5. M. Moll, D. L. Doyle, M. Haerer, and D. M., Guazzo, *J. Pharm. Sci. Tech.* **52**, 215–227 (1998).

HOT-FILL TECHNOLOGY

Raymond A. Bourque
Ocean Spray Cranberries, Inc.,
Lakeville, Massachusetts

Food processors use a variety of processing, formulation, and storage methods to assure that food products do not spoil due to microbiological activity throughout their shelf life. Products such as cereals, breads, and confectionaries are formulated with sugars and/or salts to lower water activity (a_w). Water activity below ~ 0.90 will not support the growth of most food-spoilage bacteria (1). Chemical preservatives, such as benzoate or sorbate, are added to many products to inhibit microbiological growth. Many dairy products, fruit juices, fruits, vegetables, meat, fish, and prepared meals are distributed under refrigeration or frozen conditions. Shelf-stable, low-acid foods—such as vegetables, meat, and fish, with a $\text{pH} \geq 4.6$—rely on a thermal process. Thermal processing of low-acid foods is achieved in a retort at pressures of 10–20 psi (7–14 kg/m^2) and temperatures of 240–260°F (116–127°C) (2,3). Food products with a $\text{pH} \geq 4.6$ will support bacteria, yeast, and mold growth. Commercial sterility is defined as the elimination of all microorganisms that can grow and metabolize in a product. To achieve commercial sterility in foods with a $\text{pH} \geq 4.6$, bacteria must be destroyed as well as yeast and mold. The destruction of many bacteria requires temperatures in excess of 212°F (100°C). To achieve temperatures above the boiling point, overpressurization in a retort process is necessary. The high temperature achieved not only destroys micro-organisms in the food but also sterilizes the package. Packages historically used for retorted low-acid foods include metal cans, glass jars, and to a lesser extent, retortable pouches.

High-acid foods with a $\text{pH} < 4.6$ support the growth of yeast and mold but, unlike low-acid foods, only a limited number of bacteria. Yeast, mold, and the types of bacteria that can metabolize in high-acid foods are more temperature-sensitive than those that grow in low-acid foods. Temperatures in the range of 170–200°F (77–90°C) are usually adequate to destroy these microorganisms. Commercial sterility of high-acid food products and the sterilization of the containers in which they are packed is achieved with temperatures of <212°F (100°C). Therefore, retorting with overpressure is not required. High-acid foods are thermally processed in one of three different ways: hot filling, postfill pasteurization, or pasteurization with aseptic filling. This article focuses on hot filling.

HOT-FILL PROCESSING

Foods such as fruit juices, fruit sauces, jams, jellies, tomato sauces, ketchups, and barbeque sauces are often hot-filled. The hot-fill process consists of heating the food product to an adequate temperature to destroy the yeast, mold, and limited types of bacteria that can grow in the food, and then holding the food at that temperature for an adequate time to destroy these microorganisms. The temperatures required range from 170 to 212°F (77–100°C), and the hold times vary from 30 to 60 s depending on the food product. The hot product is then filled directly into the container or package. The headspace in the package may then be nitrogen- or steam-flushed to reduce headspace oxygen. The package is then hermetically sealed and inverted to sterilize the lid or closure. The hot product sterilizes the package. To accomplish package sterilization, the product must be at or above the minimum temperatures [170–200°F (77–93°C)] for an adequate time (usually 1–3 min) (4). Thus, the control points for a hot-fill process are the *minimum fill temperature* and the *minimum hold time* (see Figure 1). Depending on the heat sensitivity of the specific food, the products may or may not be quickly cooled after the minimum hold time is achieved. Cooling is usually accomplished in a water-spray tunnel or immersion bath. Fruit juices and preserves are examples of products that require cooling directly after hot filling to protect product color, flavor, and nutrient content (vitamin C). Barbecue sauce is an example of a product that is not heat-sensitive and can be allowed to cool under ambient conditions after being packed in corrugated shipping containers.

Historically, high-acid products have been packaged primarily in metal cans and glass jars. However, in the 1980s and 1990s, several rigid and flexible plastic packages were developed for hot filling.

TINPLATE CANS

The traditional metal cans used for hot-filled foods are made of tinplate. Some are enameled inside to protect the food from the migration of iron or tin from the can into the food, which may cause a loss of color or off-taste. Other tinplate cans are not enameled inside; these are referred to as plain tinplate cans. The lack of an inside enamel allows the tin to migrate into the product. The color of some canned products, such as white grapefruit juice, is preserved by tin salts. Tinplate cans are also enameled to protect the can itself from the corrosive effects of some high-acid products. High-acid products, such as tomatoes and cranberries, can corrode tinplate cans, which results in perforations and leaking cans. The hot filling of tinplate cans consists of hot-water washing the cans to remove dust or other foreign contamination, hot filling the cans with the high-acid food, flushing the headspace with steam or nitrogen, double-steaming a metal lid onto the can, inverting the can to sterilize the lid, and conveying the hot can for an adequate distance to provide the necessary hold time prior to entering a water-spray cooler. The cans are cooled to approximately 90–110°F (32–43°C). The maximum cooler exit temperature is specified according to the product's heat sensitivity. The minimum cooler exit temperature is established to ensure that the cans are not too cool to prevent the evaporation of remaining water beads. If the can is not warm, then rust will occur, staining the label and distracting from the general appearance of the can. If the can is too cool, then labeling may be difficult as the hot melt used in labeling will set up too quickly, which causes misapplied labels. A vacuum is generated in

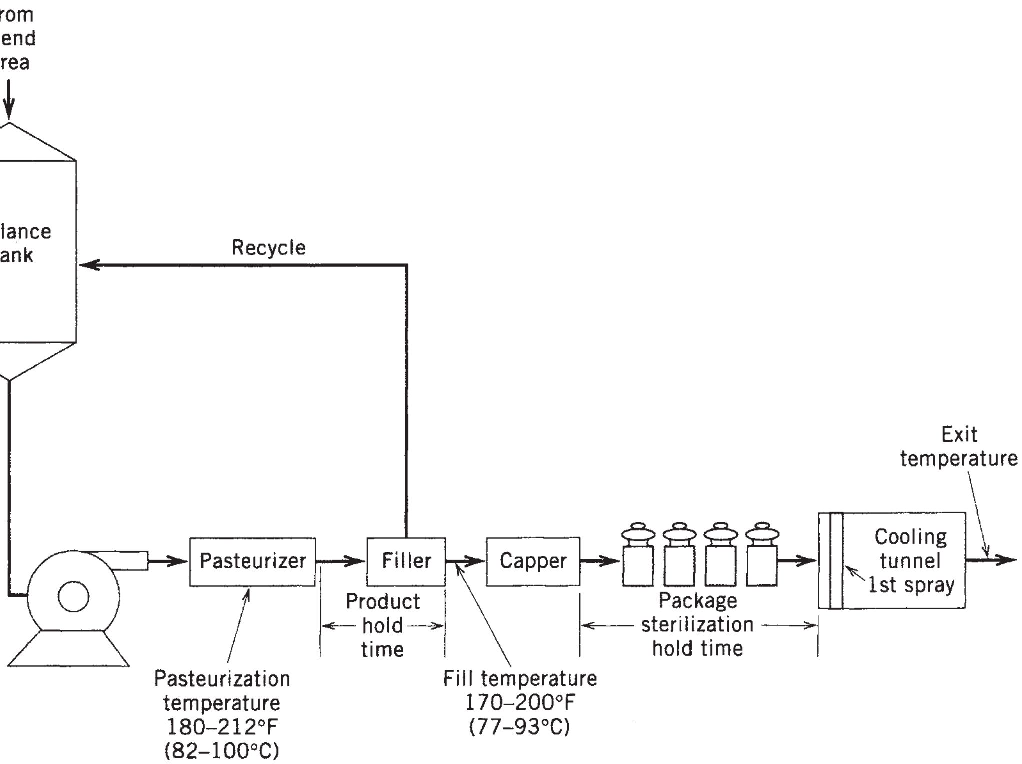

Figure 1. A typical hot-fill process for high-acid food or beverage products.

the can as it cools. The vacuum at the exit of the cooler ranges from approximately 16 to 25 in. of mercury (41–64 cm Hg) depending on the headspace, product density, and size of the can. The vacuum is formed by a combination of the condensation of the steam in the headspace and the contraction of the product as it cools. The vacuum is important as it provides integrity to the can by pulling the ends inward and not allowing them to flex during distribution. The concavity of the end caused by the vacuum also provides visual evidence to the consumer that the can is properly sealed.

LIGHTWEIGHT ALUMINUM CANS

In the 1980s, a new hot-filling process was developed that allowed the hot filling of lightweight aluminum cans. This technology is now used extensively for hot-filled fruit juices and juice drinks in $11\frac{1}{2} = fl = oz$ cans. Lightweight aluminum cans could not be hot filled with traditional processes because the aluminum cans would panel as a result of the vacuum created when the product cooled. The new hot-fill process includes dosing the filled cans with liquid nitrogen immediately prior to applying and double-seaming the can end. The cans consist of a drawn and ironed aluminum body with an E-Z open aluminum end. Directly following the dosing of the liquid nitrogen and the application of the end, the nitrogen vaporizes and creates internal pressure. In the case of hot fruit juices, this nitrogen dosing creates an initial pressure of approximately 45–50 psi (31.6–35.1 kg/m^2) prior to cooling and 25–35 psi (17.6–24.6 kg/m^2) after cooling. Thus, the nitrogen overpressure more than compensates for the vacuum created by the product as it cools, and the final package is overpressured to compensate for its lightweight construction. The hot-fill nitrogen dosing process for juice and juice drinks consists of cleaning the cans with hot water or air, hot filling with juice, leaving a headspace of approximately 0.3–0.4 in. (7–10 mm), dosing liquid nitrogen, applying the can end, double-seaming the can end to the can body, and finally cooling the product to approximately 90–110°F (32–43°C). This hot-fill process allows the use of lightweight aluminum cans for fruit juice and offers the potential for hot filling a variety of other food products. (See also Cans, aluminum.)

GLASS CONTAINERS

Hot-filling technology has been used for many years for, not only tinplate cans, but also for vacuum-packed glass jars and bottles. The hot-fill process used for glass packages is very similar to that used for tinplate cans. One main difference is that glass packages must be preheated prior to hot filling to prevent breakage caused by thermal shock. This problem is particularly troublesome in the winter, when glass is either stored in cold warehouses or filled directly off delivery trucks. It is generally believed that thermal-shock breakage is not a problem if the glass temperature after preheating is no more than 75°F (24°C) less than the hot product. Thus, if the product fill temperature is 185°F (85°C), then the glass must be preheated to at least 100°F (43°C) before filling. The preheating process is usually accomplished with hot water and also serves the function of cleaning the jars or bottles. Cleaning is particularly important with glass, as glass is often received in corrugated shipping and, thus, may be contaminated with carton dust. After cleaning and preheating, glass containers are filled with hot product, ranging from approximately 170 to 200°F (77–93°C). A small headspace is maintained. The headspace is usually flushed with steam in the capper. Metal twist-on, lug-style caps are usually used. These caps contain a gasket compound used to seal the jar or bottle. The caps are preheated in the cap shoot to soften the compound. A small initial vacuum is generated directly following the capper by the condensation of the steam in the headspace. This initial vacuum varies depending on the size of the headspace and the amount of steam in the headspace. An initial vacuum of at least 4–5 in. Hg (10.2–12.7 cm of Hg) is necessary prior to cooling to ensure that the seal between the glass jar or bottle and the cap compound is secure prior to generating the larger vacuum created by product contraction as it cools. Conveyors are designed to allow for at least a 60-s hold after capping prior to entering the cooler. This hold provides time for the hot product to sterilize the jar or bottle. The first zone of the cooler uses a preheated water spray to prevent glass breakage due to thermal shock. The 75°F (24°C) temperature differential, important in the preheating operation, is also critical in cooling. The water-spray temperature should be no more than 75°F (24°C) less than the product temperature. Often the cooler is designed such that cold water enters the discharge end of the cooler and is transported to the infeed end. Thus, the water is warmed as it cools the product throughout the cooler, which prevents thermal shock glass breakage while minimizing energy cost. The product temperature at the end of the cooler is usually 90–110°F (32–43°C). The final vacuum depends on the viscosity characteristics of the product and on the size of the headspace, but usually it is 16–22 in. Hg (41–56cm Hg).

As mentioned, barbecue sauce is not cooled after filling. Products such as this are packed in corrugated shipping containers, palletized, and cooled over several days in normal warehouse storage. As containers in the center of the pallet are insulated by the product stacked on the outside, top, and bottom, they may cool at a much slower rate than product on the outside. To reduce the variation in cooling rates, pallet patterns with ventilation chimneys are used to facilitate heat removal from the center of the pallet.

As hot-filled glass jars and bottles contain a vacuum, they must be handled carefully after cooling. Glass containers, particularly those filled with highly viscose products, break as a result of a phenomenon commonly known as “water hammer” breakage, which occurs when a glass jar or bottle containing a vacuum is dropped or otherwise impacted. On impact, a vacuum bubble forms and collapses quickly. This results in the creation of a hydraulic action that concentrates forces on any defect in the container causing breakage (5).

Care must be taken to properly adjust drop case packers to prevent water-hammer breakage. Corrugated shipping containers are designed to cushion the bottom of glass jars and bottles to minimize the impact of dropping. Partitions are used to minimize glass-to-glass impact. See also Glass container design.

PLASTIC PACKAGES

Historically, the hot-fill process has required packages that can withstand the hot-fill temperatures and are sufficiently rigid to withstand the vacuum developed after cooling without paneling or otherwise distorting. Until recently, these packaging material requirements have limited the use of materials for hot-fill packages to metal and glass. During the 1980s, packaging material and hot-fill technology developments occurred that allowed the use of, not only lightweight aluminum cans as already discussed, but also plastics (6).

Many plastic package technologies were developed in the 1980s that resulted in the commercialization of several hot-fill plastic packages that replaced traditional glass or tinplate packages. These technologies included plastic squeeze bottles with dispensing closures for ketchup and barbeque sauce, plastic table-ready bowls with peelable membrane seals for fruit sauces, plastic cans with double-seamed metal ends for a variety of products, and clear plastic bottles for fruit juices, juice drinks, and isotonic sport drinks (see also Blow molding).

Poly(Ethylene Terephthalate). The late 1970s and most of the 1980s was an era of rigid plastic food-packaging development. Nearly all the major U.S. packaging companies were actively developing plastic packaging technologies. Several Japanese and European packaging companies were also focusing their research and development activities on rigid plastic package developments for food and beverages. In the mid-to-late 1970s, polyethylene terephthalate (PET) was commercialized for carbonated soft-drink bottles. The initial application was the 2-L carbonated soft-drink bottle. Carbonated soft drinks contain preservatives and, thus, are cold-filled. They require a high gas-barrier to retain CO_2 but do not require the high heat resistance or physical strength necessary for hot filling. PET, as used in soft-drink bottles, softens at temperatures too low for hot filling or retorting. However, the success in the market of PET soft-drink bottles proved the consumer acceptance of plastic, and it confirmed the business potential that supported other major plastic food and beverage R&D programs.

Acrylonitrile. At the same time as PET was being developed for cold fill, another plastic resin—acrylonitrile (AN)—was under development for food and beverage packaging. Although AN, like PET, was clear and provided an adequate gas barrier for carbonated soft drinks and oxygen-sensitive foods and beverages, it had a significantly higher melting point and, thus, could be hot-filled and potentially even retorted. In the 1970s, AN was test-marketed for carbonated soft drinks. In addition, several hot-fill containers were developed and test-marketed. A squeeze bottle with a dispensing closure and an induction aluminum-foil seal was test-marketed with barbeque sauce. At least two fruit-juice processors introduced into test markets apple- and cranberry-juice products in $5\frac{1}{2} = fl = oz$ (162.6-mL) AN cans with seamed-on metal ends. Several other developments were under way. In 1977, the U.S. Food and Drug Administration FDA banned the use of nitrile polymers in direct contact with beverages because of the potential migration of AN monomer from AN packages into beverages and the possibility that it could be a carcinogen. AN was reapproved in 1984 with limitations (7).

Polypropylene. Polypropylene containers were also being developed for food and beverage applications in this period. Polypropylene can be thermoformed or extrusion blow-molded and, thus, made into bowls, tubs, and bottles. It has a high melting point and, thus, is well suited for hot-fill applications. Polypropylene is not crystal-clear, like PET and AN, but it is semiclear (contact-clear). The oxygen-barrier properties of the polypropylene are relatively poor. This limited polypropylene's application to foods and beverages, until coextrusion technology was developed in the 1980s to allow the addition of small amounts of high-barrier materials to polypropylene packages. Coextrusion technology resulted in the production of multilayer extrusion, blow-molded bottles and thermoformed containers containing 5 to 7 layers. Figure 2 shows a typical 6-layer, hot-fillable, high-oxygen-barrier polypropylene container. The inner and outer layers consist of virgin polypropylene. Ethylene—vinyl alcohol (EVOH) is used in the middle layer to provide a high-oxygen barrier. Polypropylene regrind is incorporated to use the scrape generated in the extrusion blow-molding process. Two adhesive tie layers are required for proper bonding of the EVOH to the polypropylene. Containers made of this material are hot-fillable, are abuse-resistant, and provide a high-oxygen barrier and contact clarity. In the 1980s, several food processors modified traditional hot-fill processes to allow conversion to polypropylene/EVOH containers from glass and tinplate. Examples include 4-oz apple-sauce cups as well as 12–16-oz cranberry-sauce containers, ketchup and barbecue sauce bottles, and some fruit-juice containers. Most of these hot-fill packages were sealed with heat-sealed or induction-sealed aluminum-foil laminates.

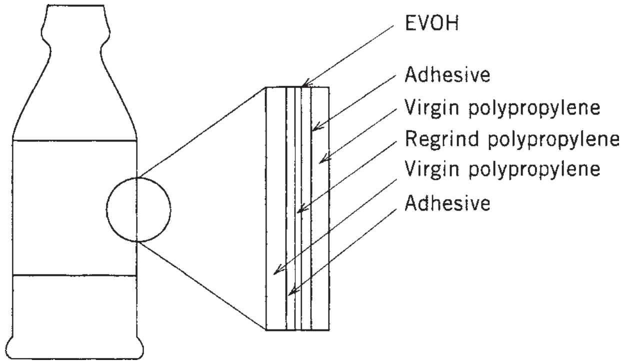

Figure 2. A typical hot-fillable polypropylene/EVOH/polypropylene bottle.

Heat-set PET. Polypropylene/EVOH co-extrusions provide an excellent hot-fill food and beverage packaging material with the possible shortcoming, for some products, of a lack of glasslike clarity. Although PET provides the clarity of glass, it was not hot-fillable until advances in injection blow-molding technology were made in the mid-1980s. Heat-setting technologies were pioneered, primarily by the Japanese, in the early-to-mid-1980s. More advances were made shortly thereafter by U.S. PET bottle manufacturers in conjunction with global injection and blow-molding equipment suppliers. The first commercial application of hot-fillable PET bottles, technologically possible because of the heat-setting process, were for fruit juice and juice drinks. In September 1985, 64-fl-oz (1.89-L) heat-set PET bottles were commercially introduced with a line of cranberry-juice drink products using the Japanese technology. Shortly thereafter, U.S. bottle manufacturers commercialized alternative thermally stable technologies for PET, and the commercial use spread beyond fruit juices and juice drinks to isotonics. Ketchup also converted from contact-clear polypropylene/EVOH bottles to hot-fillable PET/EVOH.

Heat-set, or otherwise thermally stable, PET provides an adequate oxygen barrier for many products, excellent abuse resistance, good recyclability characteristics, hot fillability up to 180–185°F (82–85°C), and the clarity of glass. By the mid-1990s, hot-fillable PET became a prevalent and popular packaging material for several categories of hot-filled foods and beverages (e.g., fruit juices, juice drinks, isotonics, and ketchup) that traditionally were packed in glass.

SUMMARY

In summary, hot-fill processing and packaging is a basic traditional method of preserving high-acid foods and beverages. It has been practiced since the early days of commercial food processing and before that in home canning. It is one of the food-processing technologies that has allowed nutritious foods to be available year-round in all parts of the nation. Historically, its application has been limited to rigid metal and glass containers.

However, technological development of new materials, new package manufacturing processes, and hot-fill methods in the 1980s have resulted in the commercialization of a variety of new hot-fill packages that provide the product protection benefits of metal and glass with additional consumer benefits.

BIBLIOGRAPHY

1. N. N. Potter, *Food Science*, 4th edition, AVI Publishing, Westport, CT, 1986, pp. 297–298.
2. *Ibid.*, pp. 172–189.
3. *Thermal Processes for Low-Acid Foods in Metal Containers*, Bulletin 26-L, 12th edition, National Food Processors Assoc., Washington, DC, 1982, pp. 22–56.
4. Ref. 1, p. 197.

5. J. F. Hanlon, *Handbook of Package Engineering*, 2nd edition, Technomic Publishing, Lancaster, PA, 1992, pp. 9–11.
6. R. A. Bourque, “Hot Fill and Aseptic Packaging,” *Food PLAS VI-89 Conference Proceedings*, Hoboken, NJ, Plastics Institute of America, Stevens Institute of Technology, 1989.
7. R. Juran, *Modern Plastics Encyclopedia*, Vol. 64, No. 10A, McGraw-Hill, New York, 1988, pp. 34.

General References

M. Bennion, *The Science of Food*, Harper and Row, New York, 1980.

O. R. Fennema, M. Karel, and D. B. Lund, *Principles of Food Science*, Part II, *Physical Principles of Food Preservation*, Marcel Dekker, New York, 1975.

I

INDICATING DEVICES

Dee Lynn Johnson
3 M Company

One summer in the 1930s, Eastman Kodak Co. received a telegram from the Kitt Observatory in Arizona stating that a shipment of photographic plates had no light sensitivity. Each of these plates was developed completely and was uniformly black. A new set of plates was carefully packed and shipped to the remote observatory. Again, all of the plates were black when developed. A well-respected Pinkerton guard accompanied the next shipment. He never let the box of plates out of his sight, and the mystery was solved at a small siding in Arizona. The rail clerk received the box clearly marked “FRAGILE GLASS PLATES,” and methodically opened the box, took out each plate in the bright afternoon sun, removed the black paper cover, and examined each one. “All in perfect shape,” he said to the guard as he rewrapped the plates and returned them to the carton.

A shipper must know what happens to a package after it leaves the shipping room, but it is impossible to send a security guard with every carton. Instead, a variety of indicating devices have become the security guards for the packages.

Perishable products may speak for themselves by their physical condition or their odor. Damage to other products from inappropriate handling may not be evident until actual use. As an example, whole blood stored below 50°F (10°C) is stable for months. If the temperature rises above that point for 20 min, however, enzymatic changes could occur that would make it life threatening if transfused. The potency of vaccines is lost by exceeding critical temperatures; an even greater hazard may result by presuming that it is effective. Because microcircuits are sensitive to mechanical shock and electrical potential, individual components and wired circuits must be monitored.

TIME AND TEMPERATURE INDICATORS

The fully integrating monitoring device can indicate the temperature gradient to which it has been exposed, as well as the amount of time that it has been at that temperature. Many inventors and their companies have focused on developing such devices, which operate on the following principles: physical change, chemical change, electrochemical indication, electromechanical indication, electronic readout, and others. The devices monitor perishable foods such as fish, fruit, and vegetables, as well as pharmaceuticals and vaccines. Table 1 lists the U.S. Food and Drug Administration’s (FDA) temperature limits for various biological preparations.

Table 1. Biologics, Shipping Temperatures[a]

Product	Maximum Temperature, °F (°C)
Cryoprecipitated antihemo-philic factor[b]	<0 (−18)
Measles, mumps, and rubella virus vaccine, live	<50 (10)
Measles and rubella virus vaccine, live	<50 (10)
Measles-smallpox vaccine live	<50 (10)
Measles virus vaccine, live, attenuated	<50 (10)
Mumps virus vaccine, live	<50 (10)
Poliovirus vaccine, live, oral, type 1	<32 (0)
Poliovirus vaccine, live, oral, type 2	<32 (0)
Poliovirus vaccine, live, oral, type 3	<32 (0)
Poliovirus vaccine, live, oral, trivalent	<32 (0)
Red blood cells,[b] frozen	<(−85) (−65)
Red Blood cells,[b] liquid	34–50 (1–10)
Rubella and mumps virus, live	<50 (10)
Rubella virus vaccine, live	<50 (10)
Single-donor plasma,[b] frozen	<(−18)
Smallpox vaccine, liquid	<32 (0)
Source plasma[b]	23 (−5)
Whole blood[b]	34–50 (1–10)
Yellow fever vaccine	<32 (0)

[a] Ref. (1).
[b] Human.

Indicators that show time only are also available in many styles. These are used primarily on shipping containers, not on consumer packages. Life-dated products, such as photographic film and some foods, can have greatly extended salable time by refrigerated storage. A time indicator would benefit the manufacturer and retailer as well as the consumer.

The Andover Laboratories manufactures a time–temperature integrator called the Tempchron, which is formerly known as the Ambitemp (see Figure 1), which functions with a fluid that has a specific melt temperature for the product to be monitored. This device can be described as an integrator because it provides information

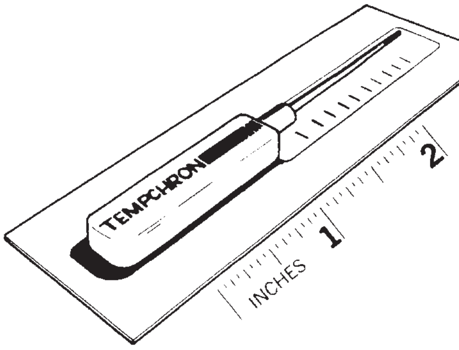

Figure 1. Integrated time–temperature indicator. The Tempchron (Andover Laboratories) uses the melt temperature of the product to be measured. To convert in. to cm, multiply by 2.54.

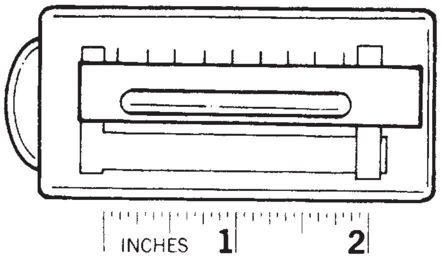

Figure 2. Integrated time–temperature indicator. The TTI (Honeywell Corp.) used an ampul of electrolyte between metal plates. To convert in. to cm, multiply by 2.54.

on the multiple of the time and temperature, giving a readout in degree minutes that can be interpreted from a chart. A wide range of temperatures can be monitored by selection of the liquid that is to be frozen in the tube.

Figure 2 shows an interesting concept of a time–temperature integrator (TTI) that was at one time manufactured by Honeywell Corp. This device, comprised an electrolytic battery that was activated by breaking an ampul of electrolyte between copper and cadmium strips. An electrochemical color reaction that was accelerated at higher temperatures ensued.

Kokum Chemical in Malmo, Sweden, manufacturers a time–temperature monitor (TTM) that uses an enzyme to bring about a color change. This product (see Figure 3), the I-Point TTM, is intended to match the enzyme reactions of the product it is monitoring. A progression of color changes occurs.

Another time–temperature integrator functions by the use of a selective gas-absorption plastic membrane and leuko (colorless) dyes that are sensitive to oxygen (2). The leuko dye is converted to the colored form inside the pouch in proportion to the rate of oxygen penetration through the membrane and the time. The rate of penetration of the oxygen through the membrane is also related to the temperature. The storage life of foods for emergency survival has been studied as a function of the temperatures at which they were stored. With the accurately calibrated barrier films (see the Barrier polymers article) now available, this may prove a valuable area of investigation.

Allied Chemical Co. has a patent (3) on work in which combinations of conjugated acetylene compounds irreversibly change color when heated. After finalizing the above design, the Program for Appropriate Technology in Health (PATH) in Seattle, WA., has marketed a product called the PATHmarker, which indicates the change in color.

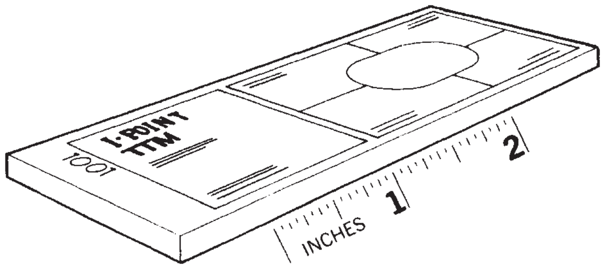

Figure 3. The I-Point TTM (Kokum Chemical) is an integrating time–temperature monitor utilizing enzyme-produced color change. To convert in. to cm, multiply by 2.54.

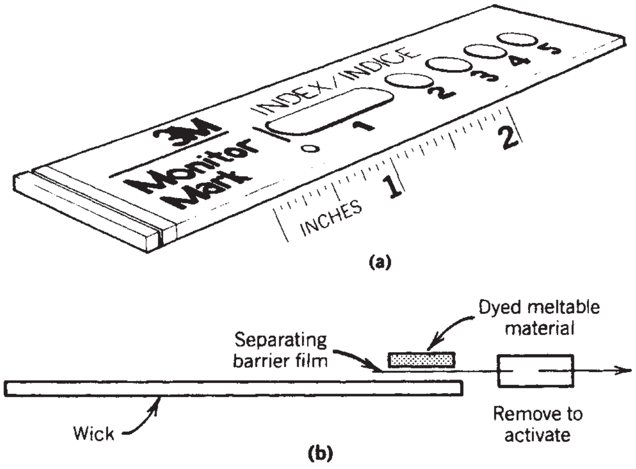

Figure 4. (**a**) The Monitor Mark Time Temperature Tag (3 M Co.), an integrator available in many temperature ranges. To convert in. to cm, multiply by 2.54, (**b**) Cross section.

There are two patents (4, 5) for time–temperature integrators under the name Monitor Mark [see Figure 4(a)]. In this product, a dyed meltable solid travels down a porous wick when heated above its melting point. The time interval is a function of the travel of the color down the wick. The device is activated by removal of a barrier film that is positioned between the wick and the meltable solid [see Figure 4(b)]. The product is available in several response temperature ranges.

The Therma-Gard recorder (Impact-O-Graph Corp.) monitors temperatures on a cassette and functions for 30 days. The TSI International Corp. has introduced a recorder that operates for up to 90 days in the indicating range of −20 to 100°F (−29 to 30°C).

Two workers (6), following the lead of another (7), have fabricated two styles of electronic recorders with built-in memories (see Figure 5); however, they are not commercially available. Workers at 3 M Co. have invented a Thermal History Indicating Device (THID)*. Another product that interfaces with a computer for its readout is the Tattletale thermograph (Onset Computer Co.) (see Figure 6). This thermograph reports temperature transients to a memory and can be programmed to record at 5-s intervals for 5.5–6-h intervals for 32 mo. The functional temperature range is −41 to 185°F (−41 to 85°C).

TEMPERATURE INDICATORS

Temperature-measuring devices are numerous. In the simplest form, a sphere of ice is frozen with one half clear and the other red (see Figure 7). If the product thaws, the

---

* The author and F. R. Parham, 3 M Co., Saint Paul, MN, have been active in microprocessor monitors.

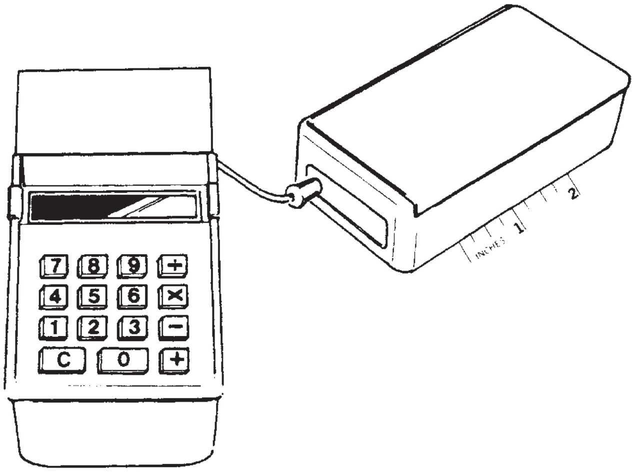

Figure 5. Electronic recorder (6, 7). To convert in. to cm, multiply by 2.54.

sphere becomes pink. High-technology temperature indicators include thermistors, circuits, and liquid-crystal displays (LCD).

Most temperature indicators depend on a chemical color change. These compact units provide direct, reliable information on the temperature to which the product was exposed. They are widely used for materials with critical temperatures such as pharmaceutical and biological preparations (Table 1) and fresh and frozen fish. Table 2 lists some of these indicators; Figure 8 is representative of these devices.

There are two other types of indicators not listed in Table 2: the Criti-Temp (Schobl Enterprise, Inc.), which is a bimetallic spring-loaded monitor, and the Precision Digital Thermometer (TSI International Corp.), which functions from a thermistor to give a temperature display.

FREEZE AND THAW INDICATORS

The main purpose of the indicators listed in Table 2 is to show a response to a rising temperature well above room temperature. Devices to indicate temperatures near the freezing point of water require special design because they must be unbroken before use and function at low temperatures.

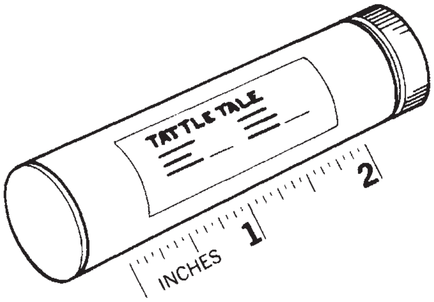

Figure 6. Tattletale thermograph electronic recorder (Onset Computer Corp.). To convert in. to cm, multiply by 2.54.

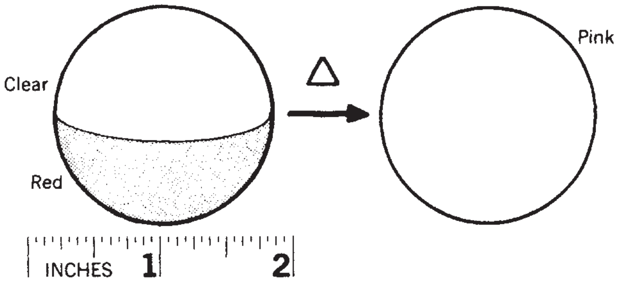

Figure 7. Thaw indicator. Half-colored sphere of ice becomes homogeneous when thawed. To convert in. to cm, multiply by 2.54.

Akzo N.V. of the Netherlands has exerted a strong influence in the monitor area through its subsidiary, Organon, heir to the BMS disposable-thermometer technology, and through its Info-Chem Protective Products Division. Info-Chem manufactures the Thaw-Watch and the Freeze-Watch. These products utilize an ampul filled with a colored fluid. Freezing breaks the ampul, which spills the contents onto a paper indicator (see Figure 9).

Biosynergy, Inc. manufacturers a liquid crystal Hemo-Temp II for use on blood-collection bags. This device, after being frozen, indicates the temperature of the blood (see Figure 10).

The Check-Spot (Check-Spot, Inc.) (8) functions at 3–32°F (−16 to 0°C) and is based on a solid emulsion (see Figure 11).

The Monitor-Mark Button (3 M Co.) [see Figure 12(a)] operates by means of a meltable, dyed compound contained in a porous reservoir. In the inactivated form, a domed indicator paper is separated from the reservoir by a small distance. When the dome is pressed, the two materials come in contact, allowing wicking to occur when the melt temperature is reached [see Figure 12(b)]. This product has many different applications, including irreversible monitoring of bags of whole blood. The specifications for blood banking have been outlined (9).

Other styles of freeze indicators are manufactured by 3 M Co. (10–12), including the Monitor-Mark Cold Side Indicator, model 32F (see Figure 13). When temperatures fall below 32°F (0°C), there is an irreversible color change. In the past, the irreversible warmup indicator (IWI), was manufactured by Artech Corp. (13).

HUMIDITY INDICATORS

Many items are sensitive to moisture in ways that are irreversible. Simply drying out or humidifying does not restore the original function, and the damage that may have occurred during shipping or storage may not be evident to the recipient. To protect the manufacturer and the customer, humidity changes must be monitored. A humidity monitor based on a color change is available from Herrmann Chemie and Packmittel (see Figure 14).

A U.S. patent has been granted for a time/history humidity indicator (14). This device comprises a salt

Table 2. Color-Change Temperature Indicators

Product Name	Company and Location	Temperature Range, °F (°C)
Celcistrip	Solder Absorbing Technology (Agawan, MA)	104–465 (40–240) 105–500 (40–260)
Thermomarkers	W. H. Brady Co. (Milwaukee, WI)	100–500 (40–260)
Tesa-Temperatur Indikatoren, irreversible	Biersdorf AG (Hamburg, Germany)	175–360 (80–180)
Thermolabel	Paper Thermometer Co. (Greenfield, NH)	140–180 (60–81)
Tattleherm	Everest Interscience (Tustin, CA)	100–500 (40–260)
Reatec	MRC Corp. (Wayne, PA)	100–420 (40–213)
Template	Wahl Corp. (Los Angeles)	100–1000 (40–590)
Telatemp	Telatemp Corp. (Fullerton, CA)	100–350 (40–155)
Thermo Strip	Archie Soloman and Associates (Roswell, CA)	219–435 (103–220)
Thermindex	Thermindex Chemicals and Coatings, Ltd. (Missisauga, Ontario, Canada)	100–500 (38–260)
OmegaLabels	Omega Engineering (Los Angeles)	100–400 (40–202)
Hermet	Markal Co. (Chicago)	100–500 (40–260)
Temp Tabs	Jardine Engineering (Hong Kong)	100–900 (40–500)
Celsipoint	Signalarm, Inc. (Springfield, MA)	100–500 (40–260)
Templilabel		
Temp-Alarm		
Templistik	Big Three Industries, Inc. (South Plainfield, NJ)	125–750 (50–395)
Thermax	Thermagraphics Measurements, Ltd. (Chicago, IL)	150–400 (65–200)
T-Dot	Westemp Instruments Co. (Cardiff, CA)	100–400 (40–200)

that absorbs moisture from the air, a water-soluble dye, and an absorbent material. After activation by removal of a barrir film, the dissolved dye migrates into the absorbent material as the humidity increases. This product resembles the product shown in Figure 4.

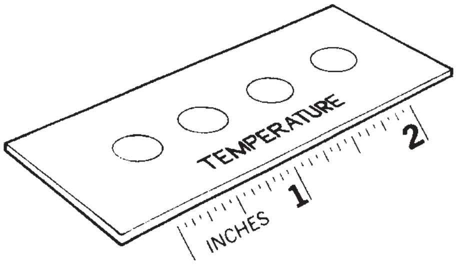

Figure 8. Temperature indicator representative of devices listed in Table 2. To convert in. to cm, multiply by 2.54.

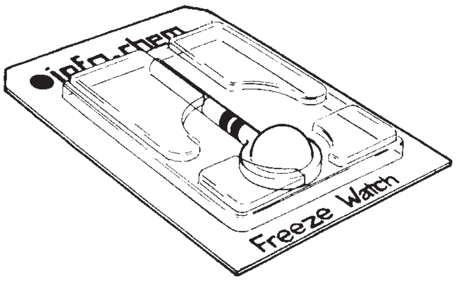

Figure 9. Freeze-Watch (Info-Chem Protective Products).

GRAVITATIONAL-FORCE INDICATORS

Gravity is a useful force in packaging because it keeps containers in place. Many times the normal force of gravity may be applied to a product in shipping and

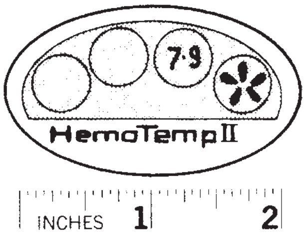

Figure 10. HemoTemp II (Biosynergy, Inc.). To convert in. to cm, multiply by 2.54.

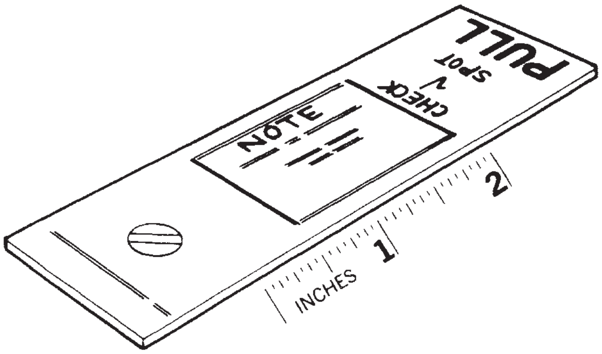

Figure 11. Check-Spot (Check-Spot, Inc.). To convert in. to cm, multiply by 2.54.

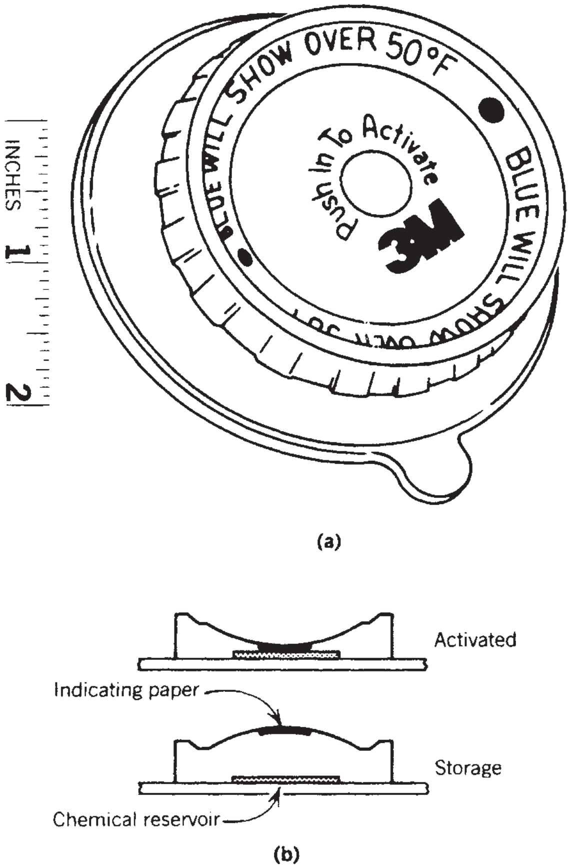

Figure 12. (**a**) Monitor-Mark Button (3 M Co.). To convert in. to cm, multiply by 2.54. (**b**) Cross section.

handling. This abusive treatment can cause hidden damage. The Hump-Gard (Impacto-Graph Corp.) is a 30-day monitor for the high *G* forces encountered in railroad shipping.

The Shockwatch is a compact device for measuring high gravitational forces (15). The active element is a capillary tube with surface-energy differences in each end (see Figure 15). A colored fluid is placed in the -philic end, and when forces exceed a predetermined value, the liquid is forced into the -phobic end where it is visible. Once distributed by 3 M Co., it is now available from Media Recovery Co.

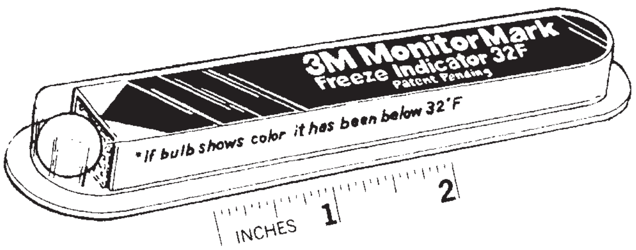

Figure 13. Monitor-Mark Freeze Indicator 32F (3 M Co.). To convert in. to cm, multiply by 2.54.

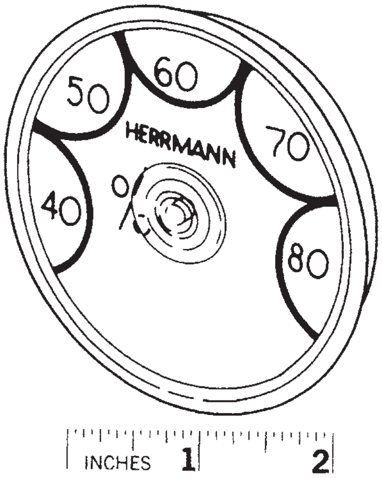

Figure 14. Humidity indicator (Herrmann Chemie and Packmittel of Sod-Chemie AG). To convert in. to cm, multiply by 2.54.

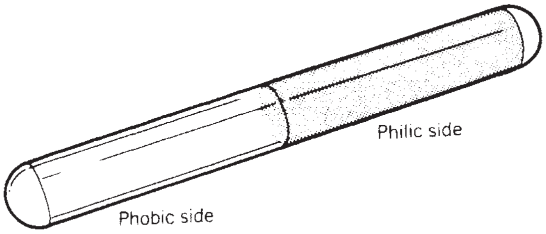

Figure 15. Capillary tube of Shockwatch.

This article has discussed only a few of the hundreds of indicating devices available[†]. A low cost indicator is still needed, preferably one that could be imprinted as part of the label of consumer products such as frozen foods.

BIBLIOGRAPHY

D. L. Johnson, "Indicating Devices" in *The Wiley Encyclopedia of Packaging Technology*, 1st ed., 3 M Company, pp. 400–406.

Cited Publications

1. *Fed. Reg.* **39**(219) (Nov. 12, 1974).
2. K. H. Hu, *Food Technol.* **26**, 56 (Aug. 1972).
3. U.S. Pat. 3,999,946 (Dec. 28, 1976), G. N. Patel (to Allied Chemical Co.).
4. U.S. Pat. 3,954,011 (May 4, 1976), W. Manske (to 3 M Co.).
5. U.S. Pat 3,962,920 (June 15, 1976), W. Manske (to 3 M Co.).
6. A. J. C. Carselidine and R. R. Weste, *CSIRO Food Res. Q.* **36**, 41 (1973).

[†] W. Manske, 3 M Co., Saint Paul, Minn., has a working file of over 255 U.S. patents on Indicating Devices.

7. M. J. M. Van't Root, *Proceedings of the 13th Congress on Refrigeration*, Washington, DC, Vol. 4, pp. 445–451.
8. U.S. Pat. 2,971,852 (Feb. 14, 1961), J. Schulein (to Check-Spot, Inc.).
9. B. A. Myhre, *Quality Control in Blood Banking*, Wiley, New York, 1976, pp. 168, 169.
10. U.S. Pat. 4,132,186 (Jan. 7, 1979), W. Manske (to 3 M Co.).
11. U.S. Pat. 4,457,252 (July 3, 1984), W. Manske (to 3 M Co.).
12. U.S. Pat. 4,457,253 (July 3, 1984), W. Manske (to 3 M Co.).
13. Product literature, Artech Corp., Falls Church, VA.
14. U.S. Pat. 4,098,120 (July 4, 1978), W. Mansek (to 3 M Co.).
15. U.S. Pat. 4,068,713 (Jan. 17, 1978), U.R. Rubey (to Detectors, Inc.).

INJECTION MOLDING FOR PACKAGING APPLICATIONS

LARRY PASCUCCI
Negri Bossi Inc., Mississauga,
Ontario, Canada

The art of making a form out of a crude mold dates back centuries in the civilization of mankind. In the 20th century the technology of mold-making and materials science in the production of plastic forms evolved together with the invention of the injection molding machine (see Figure 1). Manually operated at first, the injection molding machine evolved into a fully automatic machine capable of faster and faster "cycle times" in the production of plastic parts. This article will take you into the 21st century and explain the art, science, and technology of today's injection molding technology.

This article consists of the following sections:

The Process of Thermoplastic Injection Molding
The Thermoplastic Injection Mold
The Thermoplastic Injection Molding Machine
Automation for Injection Molding Machines
Monitoring and Servicing the Machinery

THE PROCESS OF THERMOPLASTIC INJECTION MOLDING

There are two types of injection molding processes. The most predominant is thermoplastic molding, which consists of injecting melted/heated plastic resin that must be "cooled" by the mold to solidify. The second process involves a thermoset material that requires a "heated" mold to solidfy. The machinery is essentially the same for both processes except for the control of the heating or cooling phases of the material processed. This article will concentrate on the thermoplastic molding process that is most common for packaging applications.

Thermoplastic material in the form of small "pellets" (resin) each about the size of a small pea are placed into a conical steel "hopper" ready to be fed by gravity into the "injection unit" of an injection molding machine. The pellets are then drawn through a "feed throat" into a horizontally mounted "screw "which revolves at a certain speed, driven by an electric or hydraulic motor. The screw resides in a "barrel" that is heated on its outer perimeter by electric "heater bands." As the screw rotates it mixes and induces work energy into the resin and together with the heated barrel melts the plastic. The plastic resin is conveyed to the front of the screw down its shaft. At this point, "injection" into the mold is ready to take place.

The mold is clamped in the vice-like grip of the machine ready to keep the mold closed under extreme injection pressures that can climb to 30,000 pounds-per-square-inch (psi) or more. The screw, on commands given by a central computer that directs all machine functions, then bolts forward to inject the melted resin into the mold. A device on the end of the screw called a "check valve" stops the plastic from backing up into the screw during injection.

Controlled screw speed, injection velocity, and melt pressure are crucial to making a quality finished part. The mold is cooled via water channels to solidify the thermoplastic resin. When the plastic part cools and "sets," the mold is opened by the injection molding machine and the part is "ejected" by the action of both mold and/or machine. At this point the part is left to free-fall to a conveyor that guides the part out of the machine or an automated robot enters and extracts the part for

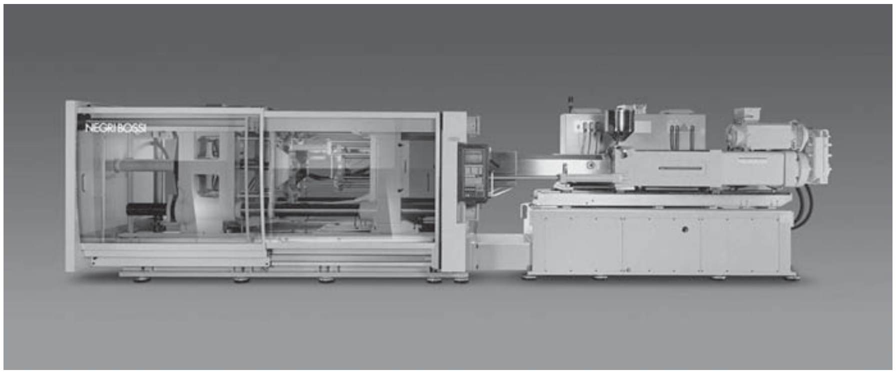

Figure 1. This modern 700-ton clamp force injection molding machine illustrates a HYBRID machine design. Electric screw drive with Hydro-Toggle clamp. PC-based control and DIGITAL Canbus architecture. (Photo courtesy of Negri Bossi.)

packaging or any downstream handling requirements. This point in the process now defines the "cycle" completed.

Let's review the sequences in a more detailed way: The first molding sequence is to "plasticize" the solid thermoplastic pellet into a hot molten condition. The second is "mold-close," where the machine clamps the mold under high forces to withstand the opening forces of high injection pressure. The third is "injection forward," where the screw bolts forward to inject the molten thermoplastic resin into the mold and "hold" the injection forward while the part is cooling. The fourth is "part cooling," where the mold via water-cooled channels cools the thermoplastic part to solidify it. The fifth is "mold open" as the mold opens to ready the part for extraction. The sixth is "part ejection," where the machine and/or mold ejects the part either by free-fall or into the clutch of a robot's grip. The final stage is the to repeat the "cycle" to produce another thermoplastic part(s). To summarize: the seven stages in the cycle of thermoplastic injection molding are:

1. Plasticize or melt the thermoplastic into a molten state.
2. Close the mold under high force to withstand high injection pressures.
3. Inject the thermoplastic into the mold under high speed and pressure and "hold" the injection forward while cooling.
4. Cool the part by extracting heat by a water cooled mold
5. Open the mold to ready part extraction.
6. Eject the part into free-fall or automated robot removal.
7. Repeat the "cycle" to produce another part(s).

THE THERMOPLASTIC INJECTION MOLD

The mold design has a tremendous impact on system productivity and product quality, and therefore on the overall economics of the injection-molding operation. The design of a mold is heavily influenced by characteristics of the part. A thorough understanding of the various mold classifications is also critical in the specification of the right type of mold best suited to your application. The mold classifications section of this article identifies each mold type and the criteria for each.

Most injection-molded parts for packaging have relatively large length-to-thickness (L:T) ratios. The length is defined as the maximum flow length in the cavity and is measured from the point where plastic enters the mold to the furthest point it travels. The thickness is the average wall thickness of the part. Early molds had L:T ratios of up to 200:1, but today they can be as high as 500:1. For such thin-wall parts, design emphasis must be placed on the hot runner system, part ejection, mold cooling, alignment, and mold material selection. A typical mold for thin-walled containers is shown in Figure 2 (also see Figure 3).

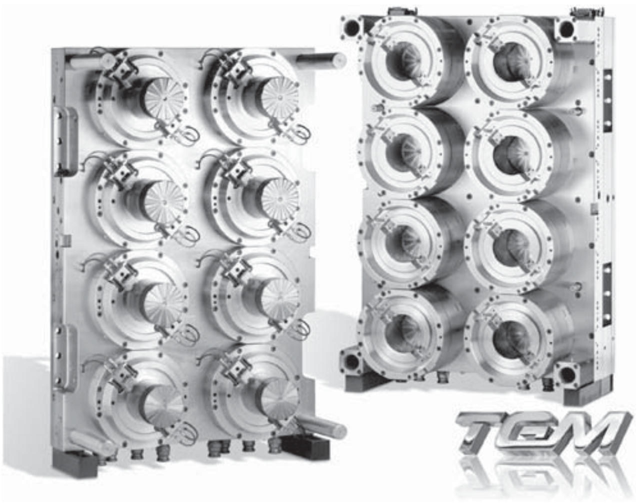

Figure 2. An eight cavity thin-walled container mold with hot runner technology. The part is a one-gallon paint can. (Photo courtesy of Top Grade Molds.)

Mold Classifications

Molds are classified into different SPI (Society of Plastic Industry) mold categories based on expected mold lifetime measured in cycles. The different classifications dictate significant differences in mold design and material which will impact tooling costs. It is important to review and identify the production requirements when specifying the type of mold to be constructed. See Table 1.

Operation. As the mold closes, the cores and cavities are aligned by some form of tapered mating interface. Plastic melt (i.e., melted resin), is injected by the injection unit of the molding machine into the sprue bushing and forced through a network of flow channels called the runner system. In Figure 2, the runner system is heated by electric heaters, hence the term "hot runner." The hot runner system maintains and controls the temperature of

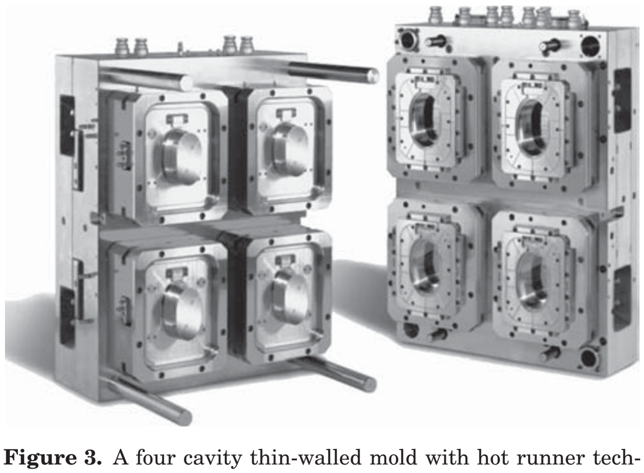

Figure 3. A four cavity thin-walled mold with hot runner technology. The part is a tamper-evident container. (Photo courtesy of Top Grade Molds.)

Table 1. Classification of Molds

Lifetime Cycles	Definition	SPI Classification	Estimated Build Time (weeks)
Greater than 1 MM	Super high production	101	12–20
Less than 1 MM	Medium production	102	8–12
Less than 500 M	Low production	103	6–8
Less than 100 M	Low production	104	6–8
Less than 500	Low production	105	5–6
Low cavity high cycles	Pilot mold (class 101)	PM	8–12
Less than 500	Prototype	PT	<6

Source: Courtesy of TecMar Group.

the melt right up to the gates by use of a sprue heater, manifold heaters, and nozzle heaters. Past the gates, the melt flows into the cavities. As the molten plastic solidifies during cooling, the parts typically shrink 1–2% of their diameter, causing them to adhere to the cores. When the mold opens, parts are ejected from the cores and drop between the mold halves.

Runner System. There are basically two types of runner systems: cold and hot. In cold runner systems, the melt in the flow channels between the nozzle and the gates is allowed to cool and solidify during each cycle and must be ejected along with the parts before the next cycle begins. Cold runner systems are simpler to design and are less expensive than hot runner systems. A disadvantage is that the plastic of the cold runner must be reprocessed or scrapped, which adds costs and environmental concerns. The introduction of scrap material to virgin resin can adversely affect process repeatability and part quality. Also, the cold runner can significantly slow the cycle at which the mold operates, since the cold runner must be cooled before ejection. For these reasons, hot runner systems have been extensively used in packaging applications.

To ensure consistent quality, the hot runner system should be balanced so that it supplies melt to each cavity at the same pressure and temperature. Flow balance is maximized by ensuring that each flow channel from the nozzle to the cavity gates has an equal length and an equal number of turns. True balance can only be achieved through engineering of the hot runner system with the use of material software to help identify problamatic areas of flow through computer simulation. This allows the engineer to test out various processing and design scenariors before any manufacturing commmences. In cases where the material characteristics or part requirements inhibit an engineered approach, artificially balanced systems can use sequence controls and shut-offs to control the material flow. Temperature balance is achieved through uniform heating and insulation. Hot runner molds with up to 128 cavities operate reliably with this balanced approach. The hot runner system should also have manifold flow channels with smooth, radiused corners to reduce friction and pressure drop. As a result, there should be no dead spots where plastic can be trapped and degrade.

Cooling. Cooling time is a key variable in the total molding cycle. To decrease cooling time and thus increase productivity, gun drilled cooling channels are located near the molding surface. High coolant flow rates are necessary to achieve high heat-transfer rates. In addition, metals with excellent heat-conductivity properties such as beryllium copper can be used for inserts to improve heat transfer where high heat is generated, such as around the gates. Beryllium copper has approximately 10 times the coefficient of thermal conductivity of steel. With a well-designed cooling system, typical thin-walled packaging parts can be cooled rapidly. Total cycle times as short as 1.5 s are now possible. It is also important for the cooling system to maintain the cores and cavities at approximately the same temperature. This prevents excessive wear between interlocking faces due to differences in thermal expansion between the mold halves.

Traditionally, gun drilling of channels has been used to allow for water flow around the cores and cavities. As demands have increased for increased productivity, reduced cycle times, improved part quality, and reduced mold maintenance, new mold cooling technologies have emerging.

A proven approach has been the use of evaporative cooling technology to simplify the design and manufacturing requirements of mold cooling by replacing gun-drilled water lines. Evaporative cooling is achieved through a “cooling chamber” or water pocket that completely envelops mold cooling surfaces. The water chamber ensures even heat distribution without the engineering compromise often associated with gun drilling. Using heat exchangers, evaporative cooling condenses the water, which in turn is recycled throughout the sealed chamber. The turbulent flow of the water reduces any buildup of sludge within the chamber that may impede mold cooling. To reduce or eliminate corrosion issues, air is removed from the cooling chamber prior to production. Use of a mold temperature controller automatically senses and adjusts water flow to regulate heat levels during processing. The advantages of evaporative cooling are both environmental (reduced waster water, reduced energy costs) and design-oriented (reduced engineering costs, reduced manufacturing costs, simplified mold construction), resulting in improved reliability. See Figures 4 and 5 for a detailed view of evaporative versus gun-drilled cooling.

Part Ejection. There are two basic methods of part ejection: mechanical and air. Mechanical ejection commonly uses stripper rings or pins surrounding each mold core, or a moving core cap to physically push the parts off the cores. The stripper rings can be activated by hydraulic cylinders

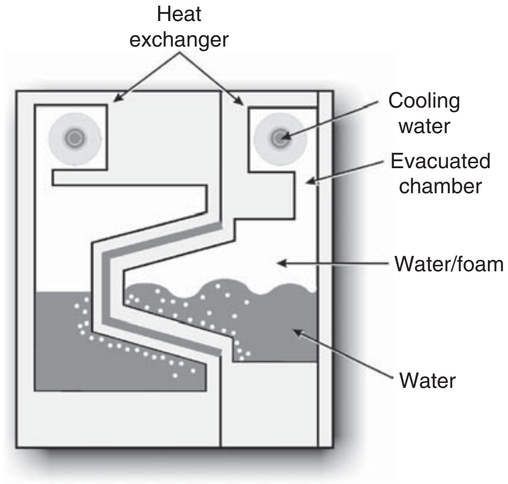

Figure 4. Evaporative cooling. (Photo courtesy of Ritemp Pty. Ltd.)

attached to the machine platen, air cylinders in the mold, or a mechanical linkage tied to the motion of the machine platen. Air ejection uses blasts of air to loosen and blow the parts off the cores. Air ejection is the more popular method because it involves fewer moving parts and, hence, less maintenance. The mold can also be more compact.

Alignment. The proper alignment of core and cavity is critical in thin-wall molding. Slight misalignment leads to preferential filling of the thicker part of the cavity, which causes a pressure imbalance around the core and cavity, thus further shifting the core. The overall result is uneven wall thickness in the molded part. In extreme cases, it can result in (a) incomplete filling of the cavity (i.e., a short shot) and (b) rejected parts. To achieve satisfactory part quality, center-to-center alignment of the core and cavity within ±0.2 mil (±0.005 mm) may be necessary.

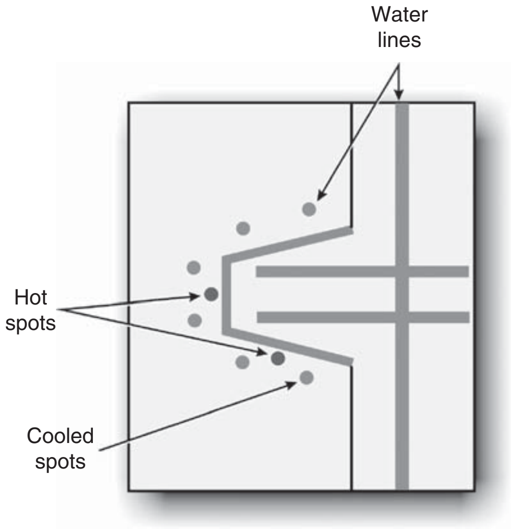

Figure 5. Gun-drilled cooling. (Photo courtesy of Ritemp Pty. Ltd.)

There are different methods of aligning the cores and cavities of packaging molds. One common method is a stripper ring that uses tapers on the stripper ring to align the core and cavity. This popular method of alignment has disadvantages for thin-wall molding, where alignment forces cause relatively rapid wear of the stripper rings. Since the stripper rings form part of the molding surface, excessive wear in this area reduces part quality. To avoid a drop in part quality, frequent mold maintenance is required. Wear is not critical if the locking rings are not part of the molding surface. Either air or mechanical ejection can be used with this approach.

The floating-core method is a more recent design that is suitable for some packaging applications. The cores and locking rings are not rigidly fixed to the core plate, but are allowed to float to more easily align themselves with the cavities. Easier alignment results in less wear on the aligning tapers. This method can also be used with either air or mechanical ejection.

Mold Materials. High-quality mold materials are of the utmost importance. Most mold components are made of through-hardened high-quality tool steel. Hardness ranges from RC 49–51 (Rockwell C scale) for the cores and cavities to RC 30 for the mold plates. Only periodic rebuilding of wear items, such as stripper rings and leaderpin bushings, is required.

Stack Molds. A two-level stack mold typically has identical sets of cores and cavities on each mold face, which are then stacked together back-to-back. In the case of a family stack mold, the cores and cavities differ between the two faces, allowing similar or matched pieces (compact-disk jewel case, floppy-disk shell, etc.) to be produced during each cycle. Use of a stack mold almost doubles the productivity of a machine. For these reasons, stack molds are increasingly popular. Three- and four-level stack molds have recently been introduced for thin-wall lids and containers to further increase machine productivity (see Figure 6).

THE THERMOPLASTIC INJECTION MOLDING MACHINE

A thermoplastic injection molding machine for Packaging Applications can be described in seven parts:

1. The machine control and control architecture
2. The power plant
3. The injection unit
4. The clamp unit
5. The ejector mechanism
6. The base unit
7. Features specific to packaging applications

There are many different configurations of horizontal clamp machines based on how they are powered. Horizontal clamp machine varieties include:

- Hydraulic-operated machines with hydraulically driven clamps

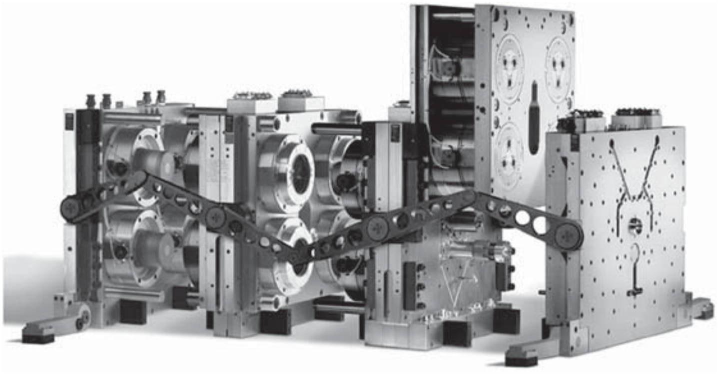

Figure 6. A three-level, 12-cavity mold for 5-qt containers utilizing a patented modular mold change feature. (Photo courtesy of Top Grade Molds.)

- Hydraulic-operated machines with toggle-driven clamps
- All-electric machines (only with toggle clamp)
- Hybrid machines utilizing hydraulic clamp and electric screw drive (see Figure 7)

Add to the above the vertical clamp design and there are quite a lot of models to choose from depending on the molding application. This article will address the horizontal machine group that is most common for packaging applications.

The Machine Control and Control Architecture

The injection molding machine performs all functions to operate a mold in a fully automatic way. The machine control and the control architecture sets the way in which all machine devices perform together in the operation of the mold. There are various control architectures, depending on the manufacturer. Modern control solutions center on "bus-type" controls that provide fully digital control operation of smart devices like smart pumps, smart valving, and digital transducers (see Figure 8). "Smart" means that devices carry their own electronics on-board to communicate with the central industrial PC-based controller. Wiring and overall machine complexity is drastically reduced over traditional "analogue" not-smart device control architectures. Diagnostics and maintenance too is greatly simplified. The machine control carries all the software programs of sequences and finite machine control in the operation of the mold. Screen pages are separated into their specific functions such as clamp, injection, and ejection phases. Controls are intuitive and user friendly.

The Power Plant

The power plant is very important to the effective and efficient operation of the injection molding machine (see Figure 9). Modern trends toward the All-Electric machine configuration is telling of the great need to reduce power consumption and energy costs associated with injection molding. The all-electric design, although more expensive than its fully hydraulic machine counterpart, allows for great power savings. Typically, as much as or more than 50% power savings is attributed to the All-electric design versus hydraulic machine designs. Digital Bus-Type control architectures (even in hydraulic clamp/injection machines) as well provide energy savings due to the

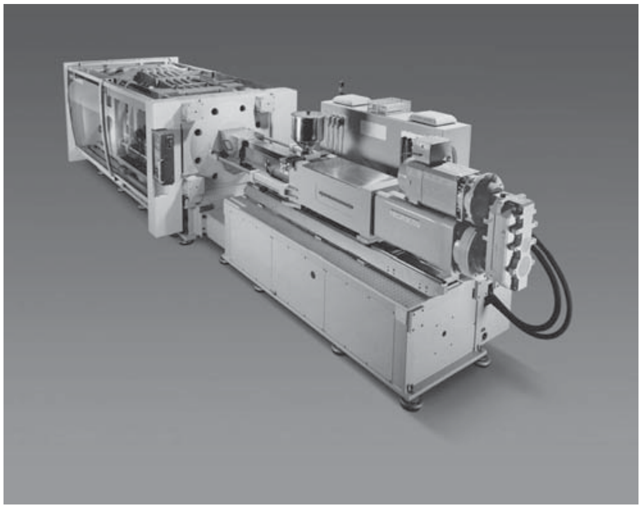

Figure 7. Electric screw drive and hydraulic toggle clamp are the main features of the machine shown. (Photo courtesy of Negri Bossi.)

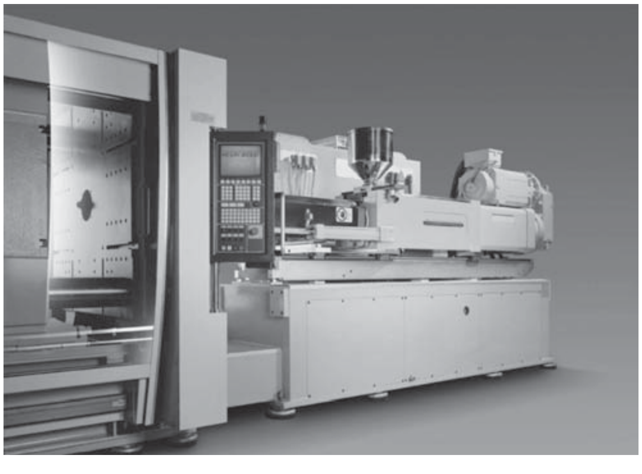

Figure 8. PC-based machine control with CanBus DIGITAL control architecture. (Photo courtesy of Negri Bossi.)

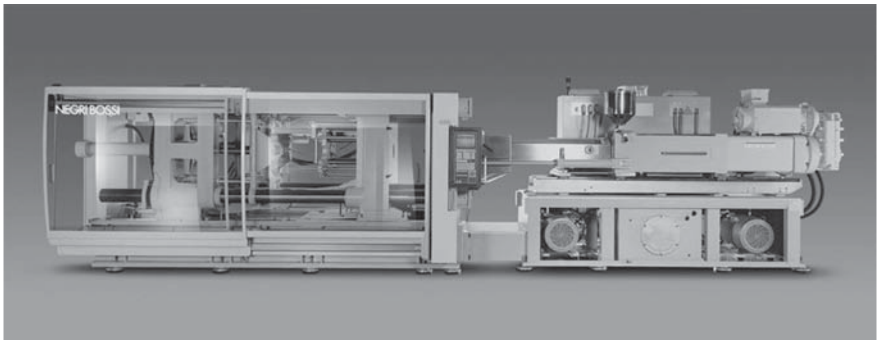

Figure 9. The power plant under the injection unit displays a double smart pump and motor system on this 700-ton electric–hydraulic hybrid machine. The oil tank is located between the smart pumps. The guarding is partially removed from the injection unit for this photo. (Photo courtesy of Negri Bossi.)

reduction of machine components required. A "smart" hydraulic pump that controls its own pressure and flow eliminates the need for a separate hydraulic manifold block to perform the same function. This reduces not only energy usage but also the number of components, allowing for very cost-effective operation.

The Injection Unit. Raw plastic material from the resin maker is processed by the injection unit of an injection molding machine. It is the most critical device in the control of the final plastic part's quality. The process is organized in sequences of the operation of the injection unit as follows: injection shot size, speed, injection and hold pressures, plasticizing recovery rate (melting/shearing rate of the plastic as a function of screw rotational speed), and backpressure (as a function of the resistance pressure on the screw to melt the plastic during plasticization). The injection unit also functions to move the nozzle and apply pressure onto the mold. It does this via "carriage" hydraulic cylinders operating on both sides of the injection unit (see Figure 10).

Determination of the injection pressure will depend on the wall thickness of the part (t), the length of flow (L) of the plastic resin from gate entry into the part to its final stopping point, and the force of injection created by the injection unit. The higher the L/t ratio (called the aspect ratio), the greater the injection forces and pressures required for injection. Typically, thin-walled packaging applications require injection forces greater than 30,000 psi and very fast plasticizing rates. Most packaging applications hover between 5 and 10 s of cycle time (even $<$5-s cycle times) so rapid actions of the injection unit are vital in meeting this requirement. The type of injection unit used most commonly is the reciprocating screw driven rotationally by an electric motor and linear movement driven by hydraulic cylinders. To reach the high speeds of injection, hydraulic accumulators (energy storage devices) are used to instantaneously drive the cylinders and therefore screw forward. The hydraulic power plant of the machine is engineered to allow mold opening and hydraulic ejection during the screw plasticizing mode. These "overlapping" motions in the sequence are designed to reduce the cyle time to its minimum, thereby maximizing machine and mold production output.

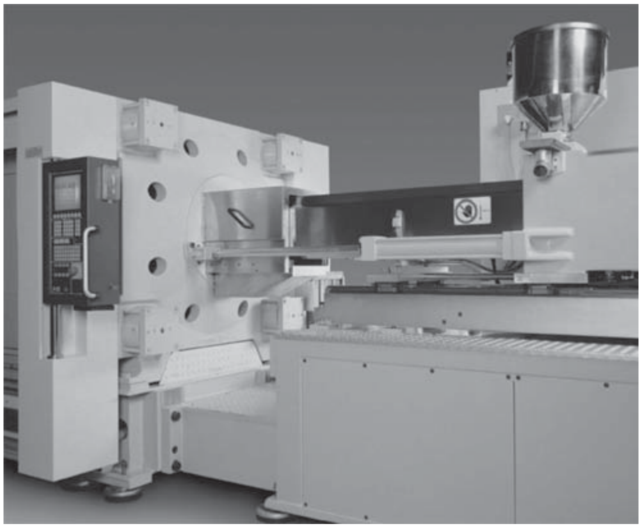

Figure 10. The injection unit displayed here shows a stainless steel purge guard over the heated barrel and hydraulic carriage cylinders (both sides). (Photo courtesy of Negri Bossi.)

Every aspect of machine design is tailored to maximize production output. Most often it is not the machine which creates delays in the production of plastic parts. The mold construction, quality, and the rate of part/mold cooling will determine the final production output. Advances in mold cooling technology as described in Figure 4 greatly reduce cycle time and increase part production.

The Clamp Unit

The main purpose of the clamp unit is to hold the mold closed under the force of plastic injection pressure that is trying to force the mold open (see Figure 11). Its design takes into consideration the objective of fast and precise operation while protecting the mold from damage should a plastic part get trapped from improper ejection or some part of the mold somehow interferes with the proper and complete mold closing sequence. This feature is called simply "mold protection."

Clamp units come in two different operating types: the toggle clamp (hydraulic or electrically operated) and the fully hydraulic clamp. The toggle clamp's advantages are its fast operating speed and natural geometric motion of high-speed acceleration, maximum velocity, controlled deceleration to final mold closing, and sensitivity on mold protection. The fully hydraulic clamp features capabilities to mold deep-draw parts such as extra large

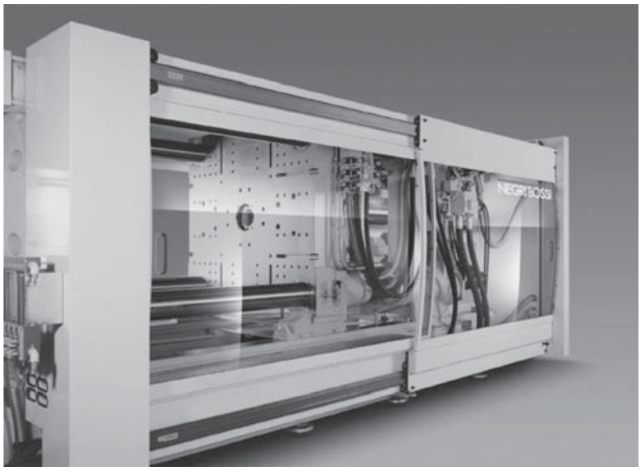

Figure 11. The clamp unit displayed here shows the moving platen with T-slots for ease of mold mounting. (Photo courtesy of Negri Bossi.)

deep-draw containers and is usually engineered into larger machines.

Clamp rigidity, precise alignment/parallelism, and operation is of prime importance because of the extreme forces generated to hold the mold closed during injection. The machine's stationary platen and moving platen's deflection is of great concern; as a result, the most advanced metals, casting methods, and machining processes are typically used in their construction in order to minimize it.

The Ejector Mechanism

Molten thermoplastic resin, when cooled, shrinks onto the "core" of the mold and requires some force to eject it. This can be done in two ways: (a) via an air blast originating from the mold itself or (b) this in combination with mechanical ejector rods operated by the machine which in turn operate mold ejection surfaces. By their very nature, packaging applications produce ultra-thin parts. These ultra-thin parts in a relatively "warm" condition fixed to the mold core can create a problem during ejection. The part could deform if only mechanical ejection is used. Most thin-walled parts take advantage of the mold air eject feature to break the vacuum created between the part and the metal surface of the core.

The Base Unit

The importance of this part of the machine's construction should not be underestimated. The base unit houses all of the major components described above. It carries the weight of these large components and connects them into one cohesive structure.

The base unit can be engineered in different ways, but almost all designs center on the "box tubular steel" welded constuction. This provides the necessary rigidity, strength, and stage for the operation of all components.

Features Specific to Packaging Applications

Thus far the machine description has been universal. Packaging applications demand features of the mold and machine dedicated to it. The packaging mold has been described in detail in this article. The packaging machine needs further clarification on design features which separate it from universal applications. Here is a summary and description of those features required by packaging applications:

- *Hydraulic Accumulator-Assisted Injection*. As described earlier in this article, this feature increases the velocity of injection in order to fill the cavity completely in a thin-walled mold. Instantaneous energy is directed to the injection unit to affect <0.5- to 1.0-s injection times.
- *Positive Nozzle Shut-off.* This feature allows the screw to rotate and plasticize resin while the clamp is opening. It prevents drool out of the nozzle during screw recovery/plasticizing.
- *Independent Plasticizing (Mold Opening During Plasticizing Phase)*. This feature allows faster cycle times of the machine/mold operation.
- *Independent Ejector Motion (Mold Opening and Ejection Simultaneously)*. This feature also allows faster cycle times of the machine/mold operation.
- *High-Pressure Injection (30,000 psi or Greater)*. Pressure is the result of restriction to flow. Due to the thin-wall restriction of the mold, greater forces and speeds of injection are required to completely fill the cavity. The forces here are created by the accumulator assisted injection described above. Keeping the screw size as small as possible also aids in higher injection pressures (pressure = force/area).
- *Barrier Screw for Higher Plasticizing Rates.* This type of screw is sometimes called a "double-wave" screw. The flights of the screw are doubled for greater shearing capacity and therefore greater plasticing/melting output. Another benefit is the greater mixing of the melt which aids in better part quality and processability. Typically, barrier screws are best suited for the polyolefin materials such as polyethylene. A thermoplastic material in high use for packaging applications.
- *High-Flow Check Ring.* The objective is to minimize any restriction to the flow of plastic material. High-flow check valves located on the tip of the screw do just that.
- *Magnetic Resin Filter under Hopper.* Entry points of the plastic into the mold are very small, in the area of 0.04 in. (1 mm) and smaller. Any foreign matter and especially metal can damage the mold or get trapped in the mold, creating flow restrictions. The magnetic filter assists in removing these contaminants.
- *Air Ejection Valves (for Mold Air-Eject Sequence)*. As described earlier in this article, the plastic part shrinks onto the mold core due to cooling and creates an air-lock that needs to be broken for safe and effective ejection of the part.

- *Hot Runner Temperature Controls*. The hot runner system in the mold requires temperature controls to affect the heat energy directed to the molten plastic.
- *Possible Hot Runner Valve Gate Hydraulic Valve and Control*. Periodically, a type of hot runner system known as a Valve Gate System is required to positively shut off the plastic flow directly at the cavity entry point (gate). This is done by a metal pin in the flow of the plastic operated by a piston in the mold. The control of the valve gate piston can be done pneumatically or hydraulically. The machine would then be fitted with a pneumatic or hydraulic valve to activate the valve gate piston.
- *Possible Parts Blow-Down after Ejection*. Multicavity molds eject parts that fall at the speed of gravity. In order to quicken the speed of the machine/mold operation (reduce cycle time), a blast of air directed downward on the parts can be beneficial in reducing the time it takes for the parts to clear the mold and allow it to close unhindered.
- *Increase Power Plant Horsepower.* In order to supply the instantaneous power requirements for packaging applications, the machine's power plant needs to be engineered accordingly. Pumps, motors, and valves must be sized properly and integrated with the machine control architecture to create conditions for ultra-fast and ultra-precise operation.

AUTOMATION FOR INJECTION MOLDING MACHINES

The process of injection molding does not end with the part being ejected from the machine. Somehow the part must get from the ejection sequence to the carton box in which the part will be shipped, or on to a secondary process such as subassembly with other parts. This process is called "downstream part handling," and there are many ways to do this. Parts could drop directly into the shipping box if there are no cosmetic abrasion concerns. It is certainly the least expensive way without need of any handling equipment. An operator could manually take parts off a conveyor belt and stack them into the shipping box? Or a better, more cost-effective way would be to automate the process fully and eliminate the need for costly manual labor while protecting the quality of the part molded.

Automation can take on many different forms. It can start right at the mold with specialized mold chutes designed to carry the parts to another station that packs them into boxes. It could be various robotic equipment such as three-axis or six-axis robots programmed for sequenced action (see Figure 12). These robots could stage a secondary process where parts are wrapped or stacked or printed or any other process required. Automation can perform quality control procedures such as weighing, inspecting, dimensioning, and so on. Indeed, every approach to automating plastic-molded part production is a creative process, and the choices available are extensive, impressive, and worthy of investigation.

Figure 12. Floor-mounted 6-axis articulating robot. Models also come in platen-mounted designs. End of arm tooling not shown. (Photo courtesy of KUKA Robotics.)

MONITORING AND SERVICING THE MACHINERY

Every second of production downtime costs money and valuable resources in a molding company. There is a great need to diagnose and monitor the machine operation including visual imagery from wherever the production manager is located, be it in the plant or out of town on business or even at home in critical situations. It is identically vital that the machine maker's service technician access real-time machine data and visual imagery from wherever they are in the name of responsive service and uptime for their customer, the molder.

Internet technology has made the above scenario possible. Real-time data on the machine process is now available via secure networks with access to any internet location worldwide. This 21st-century technology is revolutionizing the service, monitoring, and control of injection molding machines. It makes the job of servicing machines easier, faster, and better like never before. Problems get diagnosed immediately via the internet through secure levels of access. The manpower, tools, and parts needed to make the fix are prepared ahead of the travel to the machine's location. The jobs are done effectively, efficiently, and at minimum cost to the service company and/or molder, depending on cause. For the first time in the evolution of the injection molding machine, the customer and machine maker have the power over every aspect of machine operation in realtime. One system made by a well-known machine maker also allows real-time changes to be made to machine parameters/settings remotely via any internet location worldwide. This is by far the most powerful service tool ever devised for injection molding machines. See Figure 13 for a graphical explanation of a unique remote teleservice system that works with a

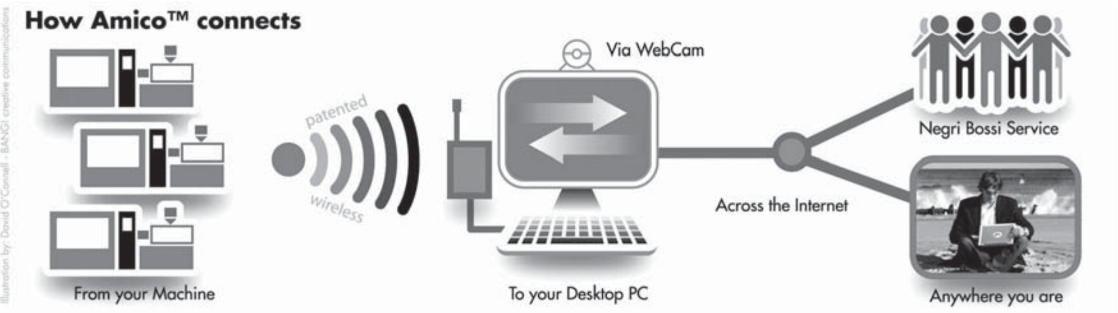

Figure 13. A graphical representation of a remote teleservice system utilizing patented wireless connectivity between machine and central PC. Real-time monitoring, diagnostics, and real-time machine control changes can be made remotely via any internet location worldwide. (Graphic courtesy of Negri Bossi.)

patented wireless communication system between machine and central PC.

BIBLIOGRAPHY

F. Johannaber, *Injection Molding Machines—A User's Guide*, Carl Hanser Verlag, Munich, 1985.

H. Rees, *Understanding Injection Molding Technology*, Carl Hanser Verlag, Munich, 1994.

B. James, Ritemp Pty. LTD, Australia, *An Introduction to the Latest Development in Mold Cooling Technology*, Gardner Publications, New York, 2006.

T. Schwenk, Process and Design Technologies, *Building a Better Injection Mold*, 2007.

R. Carter, *Injection Molding*, Wiley Encyclopedia, New York, 1997.

Contributors

R. Carter, *Injection Molding*, Wiley Encylopedia, 1997 (written portions of the section entitled "The Thermoplastic Injection Mould").

W. Stoddard, TecMar Group, Georgetown, Ontario, Canada (written portions of the section entitled "The Thermoplastic Injection Mould" and the graphics: Chart 1, Figure 3: Evaporative Cooling and Figure 4: Gun Drilled Cooling).

Top Grade Molds, Mississauga, Ontario, Canada (Figures 2, 3, and 6).

KUKA Robotics, Clinton Township, Michigan, USA (Figure 12).

Negri Bossi Inc., Mississauga, Ontario, Canada (Figures 1, 7, 8, 9, 10, 11, and 13)

INKS

R. W. Bassemir
A. J. Bean
Sun Chemical Corporation

INTRODUCTION

Printing ink is a mixture of coloring matter dispersed or dissolved in a vehicle or carrier, which forms a fluid or paste that can be printed on a substrate and dried. Printing inks are used to decorate the exterior of virtually every package and substrate used in packaging. Since there are various substrates, a number of different printing methods are required to satisfy the needs of this entire market (1). In general, the inks required may be subdivided into two classes: liquid inks and paste inks. The liquid inks include those printed by the flexographic, rotogravure, and screen process methods; the paste inks include those printed by lithographic offset, letterset, and letterpress (see Decorating; Printing).

Basically, all printing inks consist of a colorant (see Colorants), which is usually a pigment but may be a dye, and a vehicle that acts as a binder for the colorant and a film former. Vehicles generally consist of a resin or polymer and a liquid dispersant, which may be a solvent, oil, or monomer. Many other additives are used to provide some specific property or function to the ink or ink film. Approximate viscosities and film thicknesses used in different printing processes are given in Table 1. The four key properties of ink are drying, rheology, color, and end use.

LIQUID INKS

Flexographic Ink

Flexographic printing utilizes a rubber or plastic printing plate and is essentially a typographic process, printing from a raised area. The inks used are very low in viscosity (see Table 1) and dry rapidly because of their relatively high volatility. Since the printing press used has a very simple ink distribution system, these volatile inks do not cause problems in drying on the inking rollers. The thickness of the ink film is controlled by the depth of engraving used on the anilox inking roller. The commercial speeds used for this type of printing range from 500 to 1000 ft/min (152–305 m/min). Flexographic ink accounts for more than half of the ink utilized in decorative packaging.

Flexographic inks may be subdivided into two general classes: solvent-based and water-based. The volatile solvents selected for the formulation must be chosen with care, since they are in constant contact with the plate elastomer. It is important to screen these ink solvents with the plate and roller elastomers to ensure that no swelling

Table 1. Ink Viscosity and Film Thickness by Process

Process	Viscosity, Poise (Pa · s)	Printed Film Thickness (μm)
Lithography	50–500 (5–50)	1–2
Letterpress	20–200 (2–20)	3–5
Flexography	0.1–1 (0.01–0.1)	6–8
Gravure	0.1–0.5 (0.01–0.05)	8–12
Letterset	30–300 (3–30)	1.5–3
Screen	1–100 (0.1–10)	20–100

or attack of the surface takes place. In most cases, alcohols are the material of choice for solvent-based flexographic inks, with additions of lower esters and small amounts of hydrocarbons. These are used as needed to achieve solubility of the vehicle resin and proper drying of the ink film at press speed. Solvent blends are required to achieve the best balance of viscosity, volatility, and substrate wetting and must also take into account EPA (Environmental Protection Agency) requirements.

Water-based inks have increased in popularity because of air pollution concerns and are being used in increasing amounts for both absorbent and nonabsorbent substrates. The solvent used in these inks is usually not 100% water. They may contain as much as 20% of an alcohol to increase drying speed, supress foaming, and increase resin compatibility. The wetting of plastic substrates is also greatly aided by the lower surface tension of the alcohol–water mixture.

The resins and polymers used in the flexo-ink vehicles cover a wide range of chemistry and are selected to achieve adhesion to various substrates or to confer resistance properties to the dried ink film. A number of resin classes and the substrates upon which they are generally used are shown in Table 2. Note that the water-based vehicles are listed in a separate portion of the table, since they are generally emulsions or colloidal dispersions rather than true solutions.

A generic formulation for an aqueous flexographic ink (components amounts are in %, w/w) is as follows: pigment dispersion, 35–50; emulsion vehicle, 25–35; solution vehicle, 10–20; amine neutralizer, 0.5–1.5; wax emulsion compound, 2–5; wax powder, 0–2; surfactant, 1–1.5; cross-linking additive, 0–2; silica additive, 2–5; corrosion inhibitor, 0–1; defoamer, 0–1, other additives, 0.25–0.5 (2).

Gravure Ink

Gravure printing utilizes an etched or engraved cylinder to transfer ink directly onto the substrate. Because of the mechanics of filling the very small cells, the viscosity of gravure inks must be relatively low (see Table 1). This is also required in order to transfer ink from the engraved cells at high speeds. The rotogravure press uses a simple inking system, where ink is applied directly to the gravure cylinder and excess ink is scraped off with a doctor blade. The ink-film thickness is determined by both the depth of engraving and the area of the cells, because these two factors determine the volume of ink transferred. Commercial speeds vary from 800 to 1500 ft/min (244–457 m/min) or more. Gravure ink is the second-largest category of packaging inks. Together with flexographic ink, these two liquid inks account for more than 80% of all packaging ink.

Rotogravure inks can also be classified as solvent-based or water-based types. The solvent-based inks are not as restricted by plate compatibility problems as are the flexographic inks because the plate is metal and resistant to nearly all solvents. Since a wider variety of solvents can be utilized in manufacturing a rotogravure ink, a much wider range of resin types and resin molecular

Table 2. Liquid Ink Applications for Packaging: Flexographic and Gravure

	Paper/paperboard	Foil	PE	PP	Vinyl	PET	Cellophane
Solvent Ink Systems							
NC–maleic	X	X	X	X		X	
NC–polyamide	X	X	X	X		X	
NC–acrylic		X		X			X
NC–urethane				X		X	
NC–melamine	X	X					
Chlorinated rubber	X	X					
Vinyl		X			X		
Acrylic	X	X	X		X		X
ASP–acrylic			X	X			
CAP–acrylic			X	X			
Styrene	X						
Water Ink Systems							
Acrylic emulsion	X	X	X	X	X	X	X
Maleic resin dispersion	X	X					
Styrene–maleic anhydride resins	X	X	X	X			

NC, Nitrocellulose; ASP, alcohol-soluble propionate; CAP, cellulose acetate propionate.

weights can be utilized in achieving the desired ink properties. This means that gravure inks for packaging can be tailored for good adhesion to the widest selection of substrates. Historically, there are 10 gravure inks categorized by the binders or solvents used: A, aliphatic hydrocarbons; B, aromatic hydrocarbons; C, nitrocellulose; D, polyamide resins; E, SS, nitrocellulose; M, polystyrene; T, chlorinated rubber; V, vinyls; W, water-based; and X, miscellaneous. Many of these classifications are blurring as blends of these materials are becoming more common (1).

The resins and polymers used in packaging gravure vehicles cover a wide range of chemistries and are chosen to achieve adhesion to various substrates or to confer specific properties to the finished ink film. These are listed in Table 2.

Approximately 50% of all flexographic inks use water as their primary solvent and diluent. Water-based gravure inks are used widely for printing paper and paperboard substrates, and their use for nonpaper substrates is growing because of concern about air pollution. The formulation of these inks is very similar to those used in water-based flexography and the polymers are also very similar. These are listed in a separate section of Table 2. Main advantages of water inks include excellent press stability, printing quality, heat resistance, absence of fire hazard, and convenience of water for reduction and wash-up. The main disadvantage of water inks is the increased energy required for drying due to the high latent heat of water. A significant problem that can occur with water-based inks in gravure is the drying of the vehicle polymer or resin in the engraved cells. This can occur during shutdowns of the press. Some of these materials are not readily resoluble once they have dried because they are usually emulsions or colloidal dispersions in water. To assist in the drying of water-based inks, the gravure cylinders are usually engraved or etched with shallower cells. A thinner ink film is applied, which contains less water to evaporate. This also means, however, that the amount of pigment in the press-ready ink must be higher in concentration to achieve the same relative printing density as the solvent-based ink.

Uses. Type C inks are the dominant group used in packaging gravure. Type C is used for printing on foil, paper, cellophane, paperboard, coated and uncoated paper, glassine, acetate, and metallized paper. Type A and B are used for gift wrapping paper. Type D inks have excellent adhesion to many plastic films. This type ink is used in foil, paper, and paperboard. Type E includes a wide variety of inks and lacquers and some dye inks. They are often used on paper and paperboard, some grades of cellophane shellac, or nitrocellulose primed foil pouch stock glassine and other coated speciality products. Type T inks show extremely good resistance to alcohol and soap. They are considered high-quality inks. Type W gravure inks, primers, and lacquers are used to comply with VOC emission standards. Water inks are primarily used in packaging gravure on board and paper. Type V inks are used for printing vinyl films and Saran (1).

Screen Ink

Screen printing, which accounts for a relatively small percentage of ink used in the packaging market, is used on low-volume specialty items or where very thick films are desired (see Table 1). Screen ink is included in the liquid-ink section because of its paintlike rheology and chemistry.

Screen inks are applied by squeegeeing the ink through a stencil screen with a rubber blade. The inks must have adequate flow to pass through the screen, but must also have enough body to resist dripping and stringing when the screen is lifted. For many years this was a hand-printing operation, but has now become largely mechanized due to the development of rotary screen technology which allows screen units be inserted in-line with other printing technologies on web-fed combination presses. The two largest classifications of screen inks are solvent types and plastisol types, although water-based, radiation-curing, and two-part catalytic systems are also available. Substrates need not be flat, because oval and round forms can be printed.

Lamination Inks

These inks must not interfere with the bond that is formed when two or more films are bonded together to obtain a structure that provides more resistance than is found in a single film. Laminations are used in candy and food wrappers. Resins used for this ink cannot exhibit any tendency to retain solvent because this would contaminate the product. In addition to polyamides, these inks contain modifiers such as polyethylene resins, plasticizers, and wax. Laminations are usually reverse-printed and end up sandwiched between films. Water-based inks are being tested for their functionality and ability to meet U.S. EPA emission standards.

PASTE INKS

Offset Lithographic Ink

Lithographic printing uses a planographic plate in which the ink-receptive image is chemically differentiated from the nonimage area. Since these plates are constantly wetted with a dampening solution, the inks must resist the chemicals contained in these solutions without changing in their printing characteristics. The thickness of the ink film in this process is 1–2 μm, which is the thinnest film in any commercial process. Because of this, the colorant concentrations in lithographic inks are generally higher than those found in inks for other processes. Lithographic inks generally have relatively high viscosities due to the ink-distribution systems used on the press equipment for this process. It is also common to find a gelled consistency in the body of these inks because of the need to obtain high printing resolution and faithful reproduction of the plate image. Image quality of half-tone reproduction is extremely high.

Sheetfed Offset Lithography. A large segment of commercial prinitng is done on sheet-fed presses almost entirely by the litho process. Inks for these presses are based on vehicles containing phenolic-modified, maleic-modified, or unmodified rosin-ester resins dissolved in vegetable-drying oils and diluted with hydrocarbon resins. Special acrylic resins have been developed for use in quickset inks, and they offer nonskinning properties and excellent press stability. This process is widely used for printing on packaging board, paper, metal, and plastic sheets. The use of the offset blanket permits excellent reproduction even on surfaces that are not entirely flat owing to the compressibility of the blanket material. The inks used for most conventional sheetfed printing are dried by an oxidative process and may also be accelerated by the use of infrared radiation. These inks set rapidly in a matter of seconds, but are not truly dry for several hours. In the case of metal, the inks are usually reactive only at high temperatures of ≥300°F (≥149°C), which are achieved by passing the metal sheets through a heated oven after removal from the press.

Drying of sheet-fed lithographic inks can be done with ultraviolet radiation, which is applied by means of high-powered mercury arc lamps immediately after printing. This process is widely used in the production of packaging that must be die cut and finished in-line, such as cartons for cosmetics and alcoholic beverages. Ultraviolet drying of the ink offers significant energy savings in metal decorating where it replaces long, energy-consuming ovens.

Web Offset Lithography. In web offset, the same lithographic principles that are used in sheet-fed lithography are applied to the printing of the substrate in the form of a web. The web of the substrate is fed into the printing press for decoration from a large roll. The printed substrate, upon exiting the press, must be dried immediately so that the finished product can either be rewound, sheeted, or finished in-line. The most common method to dry the printed ink immediately is the utilization of a high-temperature oven that employs recirculated hot air at a temperature of about 250–350°F (121–177°C). For this reason, the handling of plastic substrates is generally not possible because of the distortion of the substrates at these high temperatures. Drying inks with ultraviolet or electron beam radiation allows the printing of temperature-sensitive substrates. Generally, web offset printing in packaging is confined to paper and board printing. However, drying technology utilizing radiation curing promises to offer the packaging market the advantages of high-speed printing, the quality of offset lithography, and the lower cost of offset plates compared to gravure cylinders. Typical speeds for web offset printing are 800–1200 ft/min (244–366 m/min).

Letterset Ink

This printing process, formerly known as dry offset, is a combination of letterpress and offset in that the printing plate uses raised images, but the printing on the substrate is accomplished with a rubber blanket. Therefore, the inks used in letterset generally have the viscosity and body of a letterpress ink. The predominant use of letterset printing in packaging is for the decoration of two-piece metal cans (see Metal cans, fabrication). Plastic preformed tubs and containers are also printed utilizing the letterset process on a mandrel press. Two-piece can printing is accomplished on special presses that produce at the rate of 1200 cans per minute with up to five colors and a clear varnish. The inks for beverage cans are generally dried by heat.

Ultraviolet drying is used by several metal-decorating printers, primarily for beer cans. Ultraviolet is widely used for curing plastic containers where thermal sensitivity is a serious problem and heat curing cannot be used. The metal-decorating ovens used for thermal curing have recently gone to short cycles that use temperatures of 600°F (316°C) for only a few seconds to cure the inks. These inks are used primarily for ecological reasons (3).

Letterpress Inks

These inks are used primarily for printing corrugated packaging (see Boxes, corrugated), although small amounts are still used for folding-carton and multiwall-bag (see Bags, paper) printing. Since letterpress uses raised images, the inks are fairly heavy in body (Table 1), and the primary mechanism for drying is oxidative or absorptive. The inks are generally formulated in a manner similar to sheet-fed offset inks but with a slightly lower viscosity. This printing method has been losing market share to the other printing processes for a number of years because of high preparatory and labor costs. This is particularly true in corrugated printing, which is going primarily to water-based flexography.

ENVIRONMENTAL CONCERNS

Speciality inks are a sector of the chemical industry. Federal regulations fall under the auspices of the United States Environmental Protecion Agency and the Department of Labor and to a lesser degree the Food and Drug Administration. Some states and voluntary guidelines also impact ink.

In general, environmental concerns affect various industries involved with ink. These include the converting industry that uses inks to produce packaging and printed matter of all types and even extends to issues related to the ultimate end-user companies whose printed or packaged products are often distributed around the world.

Common environmental aims such as reducing air pollution, use of renewable resources rather than crude-oil based chemistries, biodegradable inks and coatings, and the pressure to recycle waste materials back into the raw materials supply impact the printing ink industry. Over the past 20 years, new ink products have been developed and will continue to be developed in response to environmental issues.

The United States has been among the most highly regulated countries in the world. Beginning in the 1970s and continuing through the 1990s, there was a persistent flow of regulations governing not only printing processes but also the use and disposal of printed matter. A clear historical account of the effect of antipollution laws and the ink industry can be traced. Since the late 1980s, Canadian, Asian, and European markets have had a heightened perception of environmental issues, and regulations in these countries are being formulated at a faster rate than in the history of the United States. As printing ink becomes a global business, the successful marketing of ink technology now requires attention to an expanding body of worldwide regulations.

BIBLIOGRAPHY

R. W. Bassemir and A. J. Bean, "Inks" in *The Wiley Encyclopedia of Packaging*, 2nd edition, pp. 511–514, Wiley, New York.

Cited Publications

1. R. W. Bassemir and A. J. Bean, "Inks" in *The Kirk-Othmer Encyclopedia of Chemical Technology*, 5th edition, Wiley, Hoboken, NJ, 2004.
2. B. Szabo, in D. Urban and K. Takamura, *Polymer Dispersions and Their Industrial Applications*, Wiley-VCH, Weinheim, 2002, Chapter 5.
3. W. Herbst and K. Hunger, *Industrial Organic Pigments*, Wiley-VCH, Weinheim, 2004.

General References

The Printing Ink Manual, 5th edition, Kluwer Academic, London, 1999.

C. Finley, *Printing Paper and Inks*, Van Nostrand Rheinhold, New York, 1997.

R. Schwalm, *UV Coatings*, Elsevier, Amsterdam, 2007.

Ultraviolet/Electron Beam Curing Formulation for Printing Ink, Coating and Paints, 3 Volumes, SITA Technology, London, 1991.

INTELLIGENT INKS IN PACKAGING

Andrew Mills
Department of Pure and
Applied Chemistry, University
of Strathclyde, Glasgow, UK

INTRODUCTION

The traditional roles fulfilled by packaging are protection, containment, communication, and convenience, and the ability to address these different roles has improved enormously over the years (1). In packaging, the role of communication is largely affected using printed inks, which provide such diverse information as product and producer names, ingredients, price, sell-by date, and bar code. Although it is possible to print directly on plastics, as well as paper, the latter is usually cheaper; thus, on primary packages such information is usually conveyed via an exterior self-adhesive label, comprising inert inks (i.e., oblivious to their environment) and providing information that does not change during the lifetime of the package.

Nowadays, there is increasing interest across the food packaging chain—from packager to wholesaler and from retailer to end-user—for reactive, printable inks, that is, intelligent, smart, or diagnostic inks that do respond to their environment, for example, by exhibiting a change in color or luminescence intensity to a change in the temperature outside the package or the level of oxygen or carbon dioxide inside and, in so doing, provide important information, that is, intelligence (1–7). Such intelligent inks are a key aspect to intelligent packaging (see Intelligent Packaging), recently defined as "capable of carrying out intelligent functions, such as detecting, sensing, recording, tracing, communicating and applying scientific logic" (1).

Just like inert inks, intelligent inks are usually printed on a surface that is applied to the package in the form of sticky labels for ease of application and incorporation. Because they are more than a normal label, such intelligent labels are often called "smart package devices" (SPDs) (1). For internal applications, SPDs often have an outer cover, usually a polymer membrane, to allow transmission of the analyte under test (e.g., oxygen) to the reactive ink in the label and prevent direct contact between the package contents and printed ink. There are a large number of patented SPDs that utlize intelligent inks and cover a wide range of chemical and physical processes. However, most of these are unlikely to have any significant commercial future, usually for reasons of cost, especially when considered for use in the food and beverage packaging industry, the largest of the packaging industries. As a consequence, this limited overview will illustrate the emerging area of intelligent inks in packaging by focusing on the different intelligent inks and SPDs which are now commercially available for use in the food and beverage packaging industry.

TEMPERATURE

Inks that change color with temperature are thermochromic (8, 9). Such inks are fairly commonplace, especially in the novelty toy market and textiles, and have been used for a variety of applications including: a safety feature for baby spoons, cups or kettles (warning of a hot surface), authentication devices on restaurant tickets, pre-paid phone cards, and store coupons and a method to prevent color copying of sensitive documents. In almost all these cases, these thermochromic inks used exhibit a reversible response, albeit with some hysteresis, and are indirect systems—that is, ones in which the chromophoric material reacts to changes in its environment brought about by heat, involving composite thermochromic pigments.

The use of thermochromic inks is not unusual in packaging and is a common feature of product labels and advertising specialities. For example, they are currently used as follows: to show when pancake syrup has been microwave heated to the desired temperature (10); in the lids of disposable coffee cups to indicate the coffee is still hot and the lid is correctly placed (11); and on beer cans to indicate when they are fully chilled (12). As an illustration of the latter, the beer manufacturer, Grolsch UK, recently featured a thermochromic ink on their cans so that the consumer could identify when the beer had been sufficiently chilled, as illustrated by the pictures in Figure 1.

Figure 1. Photographs of a can of Grolsch™ beer (**a**) before and (**b**) after correct chilling, the ink in the label becomes lighter.

The key component of most thermochromic inks used in packaging are polymer microcapsules, 1–10 μm in diameter, containing three interacting chemicals responsible for the overall temperature-dependent color in an ink, which also comprise a resin and a solvent. The first of the three components in the microcapsules is a leuco (i.e., colorless) dye, such as a fluoran, triphenyl methane lactone, and spirolactone. The ring-closed forms of these dyes are colorless—thus their "leuco" epithet, from the Greek "*leukos*" meaning white. In contrast, the ring-opened forms of these dyes are highly colored and generated by protonating the leuco form using a proton donor. The protonation of the leuco dye, Crystal Violet Lactone, to create its highly colored, protonated form is illustrated in Figure 2. Not surprisingly, the second microcapsule component is a weak acid that acts as a solvent and proton donor to the leuco dye (i.e., a "color developer") such as bisphenol A, alkyl *p*-hydroxybenzoate, and derivatives of 1,2,3-triazole and 4-hydroxycoumarin. The third component is a polar co-solvent, such as lauryl alcohol or butyl stearate, with a low melting point that controls the temperature at which the color change will take place (8, 9). The dye is usually protonated (i.e., highly colored) when this solvent is a solid, but colorless, (i.e., in its leuco form) when it is melted. Interestingly, although many combinations of dye-developer-solvent are known, the exact mechanism by which such thermochromic dyes operate is still the subject of some debate (9); however, a popular explanation is that the color of the solid form of the material is due to an ion-pair interaction between the dye and the developer—an interaction that breaks up when the solvent melts, thereupon returning the dye to its protonated, leuco form.

There is a temptation to include in this section details of the most advanced of all the SPDs, in terms of commercialization and product integration, namely time–temperature indicators (TTIs, also see Time Temperature Indicators), that is, devices that integrate over time the exposure of the package to temperature (13). However, most TTIs do not utilize a reactive, printable ink, but rather are diffusion/melting point-based with a mechanical activation element—for example, the breaking of a seal separating one reservoir from another (13–15). There are some chemical-reaction-based TTIs, such as FreshCheck™ indicator (TempTime Corp.) based on a lattice-controlled, solid-state reaction, proceeding through a 1,4-addition polymerization route, of colorless diacetylenic monomers, such as that shown in Figure 3 (14, 16, 17). These compounds polymerize thermally to give very dark, conjugated polymers. The kinetics of the polymerization depends upon the type of substitution and thus provides a route by which TTIs with different

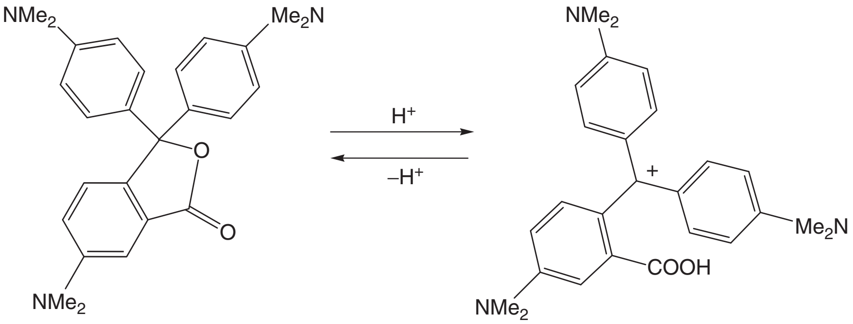

Figure 2. Reaction scheme illustrating the protonation of the well-known thermochromic dye Crystal Violet Lactone. The lactone form of this dye (left-hand-side structure) is colorless, whereas its protonated, ring-opened form is bright blue.

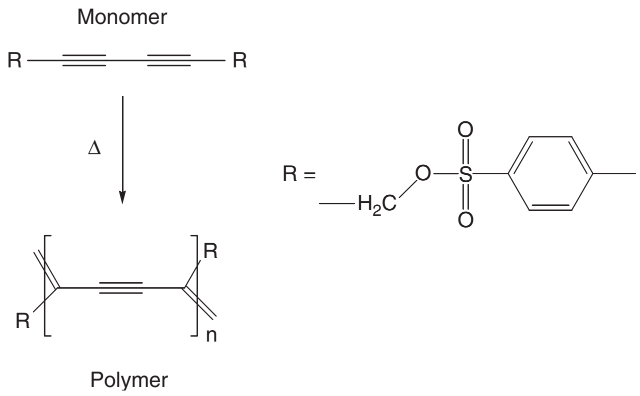

Figure 3. Polymerization of a diactetylenic monomer (colorless) that leads to a dark product; this chemistry underpins the FreshCheck™ indicator (14).

temperature sensitivities can be produced. In a typical indicator the polymerization takes place in the center of a bull's-eye pattern, with the outer part of the bull's-eye acting as reference color ring. FreshCheck™ indicators are used by some supermarkets, such as Trader Joe's in the United States and Monoprix in France, on selected refrigerated products. Another, similar TTI is the irreversible thermochromic colorless (to deep magenta) ink, developed for use as a TTI bar code by SIRA Technologies as part of their Food Sentinel System™ (18). Details of this latter ink are sparse, but, like the FreshCheck™ TTI, the Food Sentinel System™ indicators appear to be full history TTIs that are temperature-only activated (i.e., no mechanical activation) and so require deep-freeze storage prior to use—a feature that, although clearly an essential for all temperature-only-activated TTIs, is costly and a major limitation to any global product implementation.

The Cryolog company has recently developed an irreversible, novel, temperature-activated, printable TTI label that utilizes food-grade microorganisms to simulate the real deterioration of food products—called Traceo® technology (19). The growth of these microorganisms parallels that of the microorganisms naturally present in the food and produces a pH change in the indicator which is revealed using a pH-sensitive dye and/or a pH-sensitive obscuring agent, such as casein. This initially colorless, transparent Traceo® technology is used to cover barcodes, turning pink and concealing the barcode if the product is no longer fresh due to improper temperature storage. As with FreshCheck™ and Food Sentinel™, the Traceo® TTIs are full-history, temperature-only-activated indicators, requiring deep-freeze storage prior to use.

The above TTIs are compatible with label technology but not with direct printing as reactive inks. However, more promising is OnVu™, recently promoted by Ciba Specialty Chemicals and FreshPoint as a printable, *irreversible* thermochromic ink that is UV-activated and thus able to act as a TTI (20). The key ingredient is a colorless, valence isomerization photochromic, such as a spirobenzopyran, that is rendered dark blue (indicating formation of a meta-stable state) upon exposure to UV light and remains in this form when held at temperatures $\leq 1^{\circ}$C, but reverts thermally to its colorless, more stable form in about 7 days when held at 25°C. Thus, exposure to temperatures higher than those prescribed accelerates the lightening process of the color; and when the activated color attains the same shade as the reference, the product is deemed to have reached the end of its shelf life. Evaluation of the status of the indicator is made by reference to printed colors within the label. The OnVu™ label is currently printed as simple labels using water-based flexo inks, but the slight, negative feature of this label appears to be its continued sensitivity to UV light once activated (since the latter reactivates the pigments). This is addressed in the label by a UV filter flap, which needs to be placed over the label, *after UV activation*, to protect it from recharging by ambient UV light. An online labeling device has been made for this technology to allow the basic indicator to be UV-activated and then protected from re-activation by the overprinting of a UV filter. Although initially developed for use by the meat and dairy industries, plans are in place for OnVu™ indicators for fresh salads, chilled prepared dishes, and juices and to serve the medical industry, for blood, vaccines, and medication (20).

LIGHT

Dyes that change color upon exposure to light—that is, photochromics (8)—are sometimes used to protect products from overexposure to light, especially UV light. Because their main role is to respond to the environment in such a way as to protect the product, rather than provide information, they are best considered as an example of *active*, rather than *intelligent*, packaging (21) and thus will not be detailed here.

OXYGEN

At first it may not be clear why the detection of oxygen is important, especially in food packaging. However, oxygen is the main cause of most food spoilage, since its presence allows a myriad of aerobic food-spoiling microorganisms to grow and thrive. Oxygen also spoils many foods through enzyme-catalyzed reactions, as in the browning of fruit and vegetables, destruction of ascorbic acid, and the oxidation of a wide range of flavors. An increasing popular method of packaging food is modified atmosphere packaging (MAP, see also Modified Atmosphere Packaging), a process in which the atmosphere within the food package is flushed with an inert gas, such as nitrogen or carbon dioxide, reducing the oxygen content to typically 0.5–2% (7, 13, 22, 23). Unlike nitrogen, carbon dioxide is an *active* gas in food packaging, since it affects most food-spoiling microbes, reducing significantly their growth, even if some oxygen is present (22). Both carbon dioxide and nitrogen slow the rates of respiring foods, such as fruits and vegetables, and retard oxygen-based spoilage. As a consequence, MAP is very effective at extending the shelf lives of many foods, typically by a factor of 3–4, and is widely used in food packaging; indeed, it is estimated that 52 billion food packages were MAPed in 2007 (23). An intelligence ink for oxygen has great potential with regard to MAP, since it would provide the packager with a method

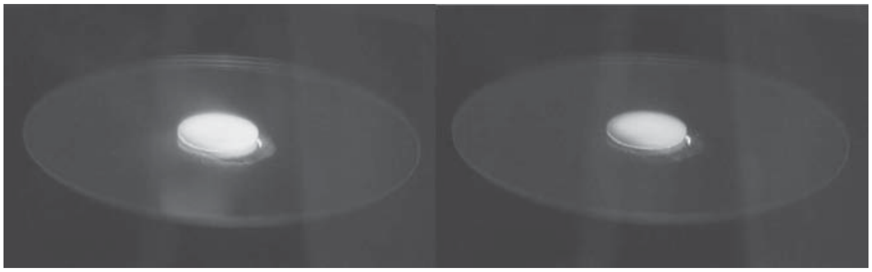

Figure 4. An O_2xyDot™ in the presence (left-hand-side image, higher level of luminescence intensity) and absence (right-hand-side image) of oxygen.

of ensuring 100% quality assurance, help the retailer identify packages of compromised integrity (e.g., damaged in transit or subjected to tampering), and reassure the consumer that the quality of the contents inside has not been compromised by damaged packaging.

Intelligent ink oxygen indicators fall into two categories—luminescence or colorimetric—and most are luminescence-based, comprising a lumophore, L, dissolved in a solvent along with a solvent-soluble resin, such as a fluoro-silicone polymer. The luminescence associated with the electronically excited lumophore, L^*, is quenched irreversibly by molecular oxygen, that is,

$$L^* + O_2 \underset{k_Q(O_2)}{\longrightarrow} L + {O_2}^* \qquad (1)$$

where k_Q (O_2) is the bimolecular rate constant for the quenching process.

Although many different lumophores have been tested, one of the most popular is tris(4,7-diphenyl-1,10-phenanthroline) ruthenium (II) perchlorate, that is, $[Ru(dpp)_3](ClO_4)_2$, where dpp is the complexing ligand, 4,7-diphenyl-1,10-phenanthroline; $[Ru(dpp)_3](ClO_4)_2$ is a highly luminescent complex (probability of luminescence $\cong 0.3$) with a long-lived excited state ($\sim 5.3\,\mu s$), that is readily quenched by oxygen (k_Q $(O_2) \cong 2.5 \times 10^9\,dm^3\,mol^{-1}\,s^{-1}$) (24, 25).

The luminescence of a commercial luminescence-based oxygen indicator, the O_2xyDot™, comprising $[Ru(dpp)_3](ClO_4)_2$ in a silicone polymer dot (5-mm diameter, 0.2 mm thick) with a glass (or nowadays acetate) backing support, is illustrated in Figure 4. The O_2xyDot™ is attached inside the package under test using typically an RTV silicone rubber adhesive. It is possible to assess the level of oxygen surrounding such a luminescence oxygen indicator (i.e., $\%O_2$) by measuring its luminescence intensity. However, such measurements require significant calibration and a very stable excitation light source and detector. As a consequence, with such indicators it is generally preferred to determine $\%O_2$ via the measurement of luminescence lifetime, τ—that is, the time taken for the luminescence to decay to 1/*e* of its initial value—although the equipment costs associated with this technique are significant. This is certainly how the O_2xyDot™ is used, and Figure 5 illustrates a typical set of luminescence decay curves for the O_2xyDot™ as a function of increasing oxygen partial pressure (26). From these results it can be seen that τ decreases with increasing $\%O_2$, and further work shows that $1/\tau$ is proportional to $\%O_2$; thus these indicators can be used for quantitative analysis of O_2. Although the major current, commercial oxygen sensor system used in food packaging, OxySense™, uses lifetime measurements and luminescence-based oxygen indicators, this approach is still too expensive, in terms of equipment and indicators, for incorporation in all MAPed packages and so its use is limited to mainly package research (24, 26).

Luminescence is often hard to discern and requires analytical equipment to assess the degree of quenching. This represents a major disadvantage of luminescence-based intelligent inks. In contrast, colorimetric indicators can be assessed, semi-quantitatively at least, by eye; as a result, there is much more interest in intelligent inks based on color. A commercial, colorimetric ink that responds to oxygen has recently been reported and comprises the following: a UV-only absorbing semiconductor photosensitizer, TiO_2; a redox indicator, methylene blue (MB); a mild reducing agent, glycerol; and a polymer encapsulating material, hydroxyethyl cellulose (27, 28).

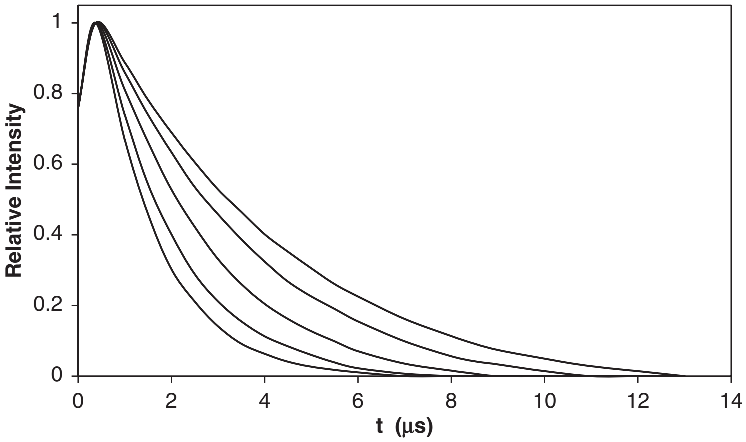

Figure 5. Luminescence decay profiles, produced using a pulsed excitation light source, for the oxygen-quenchable lumophore $[Ru(dpp)_3]^{2+}$ in an O_2xyDot™ indicator under different levels of oxygen (i.e., from slowest to fastest decay: 0%, 2.1%, 6.3%, 12.6%, and 21.0%, respectively).

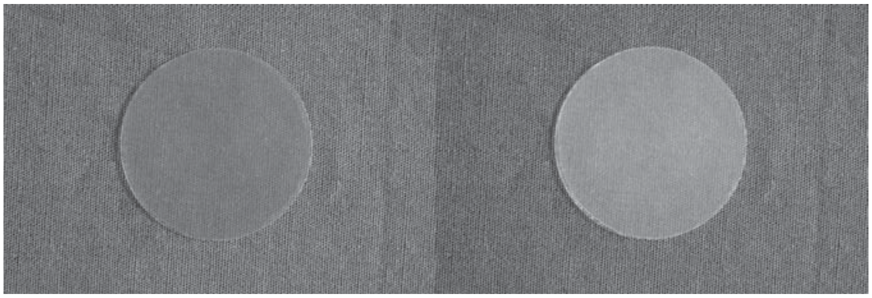

Figure 6. Photographs of a typical colorimetric, oxygen-sensitive, TiO_2/MB/glycerol/HEC ink before (left-hand side) and after (right-hand side) UV activation (3 min, 4 mW cm^{-2}). After UV activation the ink recovers its initial blue color within 10 min in air, but remains colorless in the absence of O_2.

All of the indicator components are soluble, or easily dispersed, in water and can be used to create a water-based, oxygen-intelligent ink that can be printed on a variety of common substrates used in food packaging.

The above MB/TiO_2/glycerol oxygen indicator is activated with UV-light; and Figure 6 illustrates a typical indicator film, made from such an ink, before (blue-colored) and after (colorless) UV activation. Before UV activation, the ink is inert, but upon activation it acts as an oxygen indicator, returning to its original color upon exposure to air, or remaining colorless in the absence of oxygen. The UV-activated oxygen indicator works via the simple mechanism illustrated in Figure 7. In brief, upon UV excitation of the nanocrystalline, finely dispersed titania (TiO_2) pigment powder particles encapsulated in the polymer film, electron–hole pairs are generated. The photogenerated holes are able to oxidize readily and irreversibly the glycerol present, allowing the photogenerated electrons to accumulate on the semiconductor particles, $TiO_2(e^-)$. These electrons reduce the highly colored redox-indicator (MB) to its usually bleached form (LMB). This latter species is readily oxidized back to MB by oxygen, thereby regaining its original color. However, if no oxygen is present, the film remains bleached. The Finnish-based label manufacturer, UPM-Raflatac, has recently launched an oxygen-indicating label based on this technology (29).

CARBON DIOXIDE

The popularity of CO_2 as a MAP gas has been an important driver in the development of an appropriate intelligent ink to show up leaks in packages. The chemistry that is usually employed to sense CO_2 is based on its ability to acidify water (30, 31), that is,

$$CO_2(aq) + H_2O \Leftrightarrow H_2CO_3 \Leftrightarrow H^+ + HCO_3^- \qquad (2)$$

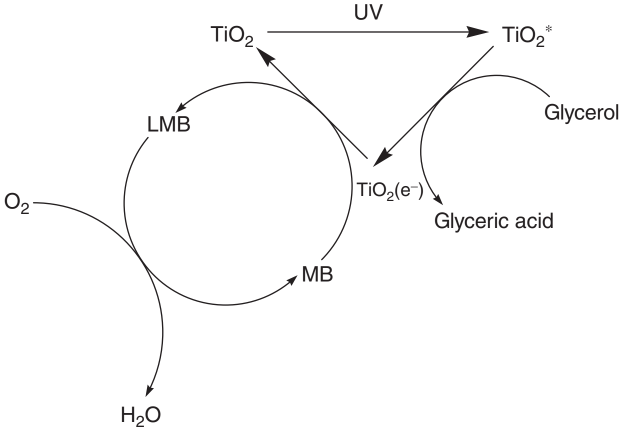

Figure 7. Schematic illustration of the primary processes involved in the functioning of the TiO_2/MB/glycerol/HEC ink.

The detection of the protons released by carbonic acid, H_2CO_3, is easily achieved using a pH-indicating dye, such as *meta*-cresol purple, which is blue when deprotonated (MCP^-) and yellow when acidified (MCPH). Thus, an aqueous solution containing MCP^- is blue in the absence of CO_2, but yellow when saturated with CO_2. Reaction (2) highlights the need for water in the formulation, but, ideally, a solvent-based (i.e., largely hydrophobic), intelligent ink for CO_2 is desired. This is achieved by coupling the anion of the pH-indicating dye with a phase transfer cation, Q^+, such as the tetraoctyl ammonium cation, to create a solvent-soluble ion pair, $MCP^-Q^+xH_2O$, which, as indicated by its molecular formula, usually retains a few molecules of water. As a consequence, when incorporated into an ink, the following reversible colorimetric process can be effected (30, 32):

$$\underset{\text{Blue}}{MCP^-Q^+xH_2O} + CO_2 \Leftrightarrow \underset{\text{Yellow}}{HCO_3^-Q^+(x-1)H_2O \cdot MCPH} \qquad (3)$$

The Trufflex GS carbon dioxide SPD, which has been promoted by Cryovac-Sealed Air Ltd., is an example of this technology (3).

FRESHNESS INDICATORS

Freshness indicators are designed to respond to chemicals released by food as a result of spoilage; usually an oxidative process is effected by bacteria, yeasts, and fungi, which break down food carbohydrates, proteins, and fats to a wide variety of low-molecular-weight molecules, such as lactic and acetic acids, aldehydes, alcohols, sulfur-containing species and nitrogen-containing molecules, such as ammonia and amines. For example, when proteins are bacterially decomposed, the products are amines that are related to the original amino acids that make up the protein. Thus, arginine is converted to putresceine, lysine, to cadaverine while histadine is converted to histamine. Putrescine, cadaverine, and histamine are volatile amines, responsible for the smell of rotting protein, such as meat and seafood. In much the same way that the

Figure 8. Typical bromophenol blue in poly(vinyl butyral)/tributyl phosphate film-coated sample bottle inverted over a sample bottle cap containing putrescine. The images were recorded after 0-, 10-, and 20-min exposure to the vapor above the sample bottle cap (33).

presence of CO_2 can be detected using an intelligent ink based on pH-sensitive dyes that respond to its slightly acidic nature, we note that intelligent inks, incorporating pH-sensitive dyes, DH, can be created that respond to the basic nature of volatile amines and ammonia, that is,

$$\underset{\text{Color A}}{\mathrm{DH}} + \mathrm{RNH_2} \Leftrightarrow \underset{\text{Color B}}{\mathrm{D}^-} + \mathrm{RNH_3^+} \tag{4}$$

For example, the pH indicator dyes bromophenol blue, bromocresol blue, and chlorphenol red have been used to create a range of ammonia intelligent inks, comprising dye, resin (poly(vinyl butyral)), plasticizer (tributyl phosphate), and solvent (methanol) (33). In the absence of ammonia or volatile amines, such as putrescine, the films are yellow, but in their presence they are either blue or purple. Figure 8 nicely illustrates the response of such a typical film coating a sample bottle when it is placed over a sample bottle cap containing a few milligrams of putresceine (a solid); within 20 min the initially yellow film is blue. This approach to sensing ammonia and volatile amines has been adopted by COX technologies, with their Fresh Tag™ indicator which is attached to the outside of the package as a small adhesive label and monitors the freshness of seafood products inside, via a barb on the backside of the tag that penetrates the packaging film, allowing any volatile amines to be wicked to the color-based indicator outside, turning it from yellow to blue if spoilage amines are present (2, 34). More recently, Food Quality Sensor International Inc. (FQSI) has used similar pH-sensing technology in their SensorQ™, a label that detects the freshness/spoilage level of packed meat and poultry (35, 36). The SensorQ™ label, illustrated in Figure 9, has an orange-colored center in the "Q" when exposed to fresh meat, which turns dark green if the meat is spoiled. The pH indicator dyes used in this sensor appear to be anthocyanins, such as betanin or flavonoid dyes (36, 37). The SensorQ™ system is a stick-on label that is used on the inside of packages (35).

As noted above, decaying foodstuffs, especially poultry meat, can produce sulfur-containing compounds, such as hydrogen sulfide and/or dimethyl disulfide. This feature has been exploited by UPM-Raflatac with their volatile sulphide indicator, comprising metallic silver and/or copper particles, typically <10-μm diameter (pale pink), which reacts to produce the dark gray/black colored metal sulfide; for example,

$$2\mathrm{Ag} + \mathrm{H_2S} \rightarrow \mathrm{Ag_2S} + \mathrm{H_2} \tag{5}$$

The metal layer, 1–5 μm thick, can be screen or flexographically printed on paper, board, or plastic, using an ink containing 70–90% dry weight of metal particles. Films of different sensitivity can be created because the sensitivity of the indicator decreases with increasing metal film thickness. The indicator is placed inside the food package and is promoted as a shelf-life indicator (38, 39).

The detection of volatile decomposition gases is the most likely and practical approach to the assessment of food quality/freshness on a global basis and very compatible to printing technology. However, these are effectively indirect indicators of the presence of spoilage bacteria or pathogens; and the possibly more attractive direct measure of such species, using immunochemical indicators,

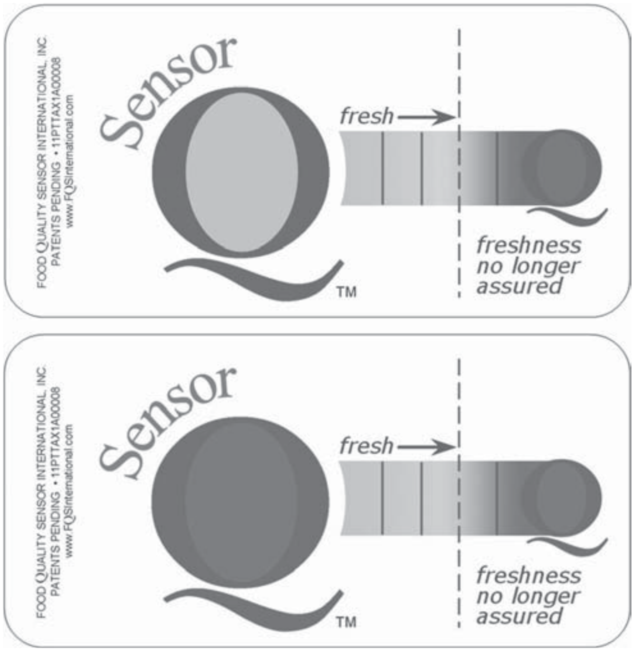

Figure 9. SensorQ™ indicator label from FQSI, before (left-hand side) and after (right-hand side) exposure to amine containing spoilage gases from meat (35). (Photographs courtesy of FQSI.)

has been reported in recent years—for example, by Food Sentinel System™ (SIRA) and Toxin Guard™ (Toxin Alert) (40–42). These indicators require direct contact with food and the use of colored or fluorescent labeled antibodies. The combination of tough food contact regulations with regard to direct food contact and a likely high cost of production represents a major barrier to the widespread implementation of these indicators in food packaging.

Finally, the RipeSense™ label, developed in New Zealand, appears to address the problem of knowing when fruit is ripe and was identified by TIME™ magazine as one of its 36 greatest inventions for 2004 (43). As shown in Figure 10, the indicator is red colored for unripe (crisp) fruit, but yellow when the fruit is very ripe (juicy); the indicator responds to the volatile gases emitted by many fruits as they ripen—not ethylene, but probably aldehydes and ketones. Developed initially for pears, and currently sold in New Zealand, Australia, USA, Canada, Mexico, Belgium, and France, work is in progress to develop similar indicators for: kiwifruit, melon, mango, avocado, and stone fruit, such as cherries and peaches. An ethylene-based ripeness sticker, RediRipe™, has been reported by researchers at the University of Arizona. It has yet to be released commercially, but it is estimated that each sticker will cost less than 1 cent (44, 45).

CONCLUSIONS

The number of commercial intelligent inks is still relatively small, but their diagnostic range is impressive and is a reflection of the significant and growing number of patents and articles published on intelligent inks and sensors. There is still some way to go before these indicators are a global feature of packaging, but few can doubt that that time will come, given increasing demand from the packaging industry customers for better, more secure packaging, a need that can be addressed via the information provided by intelligent inks.

Figure 10. Photograph of a RipeSense™ label for assessing the ripeness of fruit (pears in this case). The label is red when the fruit is crispy, and it is yellow when the fruit is juicy. (Photograph courtesy of RipeSense™.)

It is encouraging to note that EU legislation is now in place to allow intelligent and active packaging in Europe (46). EU regulations No. 1935/2004 and 2023/2006 authorize market placement of packaging which acts intelligently when in contact with foodstuffs, either by providing information on the quality (freshness) of the product or preserving it for longer by introducing favorable modifications. However, this same legislation also stresses that such active or intelligent packaging must not mislead the consumer. Thus, indicators that give wrong information concerning the food that could mislead the consumer are not allowed. This quite reasonable condition may be a factor in the slow take up of the technology by many brand names, given the possibility that most indicators could be misinterpreted by consumers, even though such indicators provide greater customer reassurance (e.g., via tamper evidence, sterilization indicators, freshness indicators), prevent illness (time–temperature indicators), reduce costs (through less waste), and enhances brand differentiation (47).

With respect to the general initial reaction and subsequent perception of the consumer with respect to intelligent indicators, much can be learned from the few established intelligent indicators that exist, such as Monoprix in France, who has been using TTIs for more than 10 years. Initially, leaflets and posters were used to raise awareness and educate the consumer, but now most are comfortable and familiar with “La Puce Fraicheur.” Current surveys show that French consumers now perceive the TTI as complementary to the “use by” date and that the TTI is a more reliable guide than the “use by” date and are prepared to pay a little more for the reassurance of freshness and quality (48). Most surveys of intelligent indicators show the consumer to be a keen advocate, given sufficient education and an associated modest increment in price, provided the indicator concerned is reliable, clear, and easy to interpret. With the gradual removal of legislation barriers and growing customer interest in information and reassurance with regard to food, the conditions appear promising for a major breakthrough in the use of intelligent inks in the food packaging industry.

BIBLIOGRAPHY

1. K. T. Yam, P. T. Takhistov, and J. Miltz, *J. Food Sci.* **70**, R1–R10 (2005).
2. J. P. Kerry, M. N. O’Grady, and S. A. Hogan, *Meat Sci.* **74**, 113–130 (2006).
3. M. Smolander, E. Hurme and R. Ahvenainen, in Nordic Foodpack web information. Available at http://www.nordicfoodpack.org/16044. Accessed March 2008.
4. E. Hurme, in *Business Briefing: FoodTech* (online), http://www.touchbriefings.com/pdf/2064/Hurme.pdf. Accessed March 2008.
5. A. R. de Jong, H. Boumans, T. Slaghek, J. Van Veen, R. Rijk, and M. Van Zandvoort, *Food Additives Contam.* **22**, 975–979 (2005).
6. P. Butler, *Materials World* **May**, 24–25 (2006).

7. G. L. Robertson, *Food Packaging: Principles and Practice*, Taylor & Francis, Boca Raton, FL, 2006.
8. P. Bamfield, *Chromic Phenomena*, RSC Press, London, 2001.
9. M. A. White and M. LeBlanc, *J. Chem. Ed.* **76**, 1201–1205 (1999).
10. J. Homola, in *Screenweb* (online), http://www.screenweb.com/index.php/channel/6/id/1425. Accessed March 2008.
11. SmartLids web information. Available at http://www.smartlidsystems.com/. Accessed March 2008.
12. S. Rahman, in *Checkout Ireland* (online). http://www.checkout.ie/Feature.asp?ID=257. Accessed March 2008.
13. J. D. Selman in M. L. Rooney, ed., *Active Food Packaging* Blackie Academic & Professional Press, London, 1995, pp. 215–237.
14. P. LeGood and A. Clarke, in *The Packaging Professional* (online). http://www.iom3.org/pp/pdfs/nov06/SMART.mat%20futures.pdf. Accessed March 2008.
15. D. Birkett and A. Crampton, in *Chemistry World* (online). http://www.rsc.org/chemistryworld/Issues/2003/October/wrappedup.asp. Accessed March 2008.
16. TempTime web information. Available at http://www.temptimecorp.com/. Accessed March 2008.
17. N. Patel and K. C. Yee, U.S. Patent 4,228,126 (to Allied Chemical Corp.), 1980.
18. SIRA web information. Available at http://www.siratechnologies.com/overview.html. Accessed March 2008.
19. Traceo® web information. Available at: http://www.cryolog.com/en/pages/products_and_services/traceo/index.php. Accessed March 2008.
20. OnVu web information. Available at http://www.onvu.com/_en/index.asp. Accessed March 2008.
21. P. Butler, *Materials World* **March**, 11–13 (2001).
22. A. L. Brody, E. R. Strupinsky, and L. R. Kline, *Active Packaging for Food Applications*, Technomic Publishing Co., Lancaster, PA, 2001.
23. A. Mills, *Chem. Soc. Rev.* **34**, 1003–1011 (2005).
24. A. Mills, *Platinum Met. Rev.* **41**, 115–127 (1997).
25. B. A. DeGraff and J. N. Demas, in C. Geddes and J. R. Lakowicz, eds., *Reviews in Fluorescence*, Vol. 2, Springer Science, New York, 2005, pp. 125–151.
26. OxySense web information. Available at: http://www.oxysense.com/. Accessed March 2008.
27. S. K. Lee, A. Mills, and A. Lepre, *Chem. Commun.* 1912–1913 (2004).
28. S. K. Lee, M. Sheridan, and A. Mills, *Chem. Mater.* **17**, 2744–2751 (2005).
29. Anonymous, in *Active & Intelligent Pack News*, PIRA Intl. Ltd., *Leatherhead* **4**, 2–3 (2006).
30. A. Mills and K. Eaton, *Quim. Anal.* **19**, 75–86 (2000).
31. A. Mills and S. Hodgen, in C. D. Geddes and J.R. Lakowicz, eds., *Topics in Fluorescence Spectroscopy*, Vol. 9, Springer, New York, pp. 119–162 (2005).
32. A. Mills, Q. Chang, and N. McMurray, *Anal. Chem.* **64**, 1383–1389 (1992).
33. A. Mills, L. Wild, and Q. Chang, *Mikrochim. Acta* **121**, 225–236 (1995).
34. COX Technologies, Fresh Tag™ web information. Available at http://www.meatandpoultryonline.com/Content/ProductShowcase/product.asp?DocID={B0591486-45CC-11D5-A772-00D0B7694F32}&VNETCOOKIE=NO. Accessed March 2008.
35. FQSI International, Fresh*Q*™ smart sensor label web information. Available at http://www.fqsinternational.com/products.htm. Accessed March 2008.
36. International published Patent WO 2006/032025 A1, J. R. Williams, K. E. Myers, M. M. Owens, and M. A. Bonne (to Food Quality Sensor International, Inc.).
37. C. Suzuki, *J. Chem. Ed.* **68**, 588–589 (1991).
38. Anonymous, *The Griffin* **2**, 62–64 (2006).
39. International published Patent WO 2004/102185 A1, M. Smolander, E. Hurme, M. Koivisto, S. Kivinen, and H. Gustafsson (to UPM-Kymmene Corp.). Food Quality Sensor International, Inc.
40. LSUAgCenter web archive information. Available at http://www.lsuagcenter.com/en/communications/publications/agmag/Archive/2000/Spring/New+Bar+Code+Will+Help+Monitor+-Food+Safety.htm. Accessed March 2008.
41. Toxin Alert web information on Toxin Guard™ available at http://www.toxinalert.com/toxinguard.php. Accessed March 2008.
42. W. T. Bodenhamer, U.S. Patent 6,841,392 B2 (to Toxin Alert Inc.).
43. RipeSense™ web information available at: http://www.ripesense.com/. Accessed March 2008.
44. USA Today report on RediRipe™ available at: http://www.usatoday.com/tech/science/2006-07-27-ripeness-sticker_x.htm?csp=34. Accessed March 2008.
45. R. A. Klein, M. R. Riley, D. M. DeCianne, and N. Srinavakul, U.S. Patent 2006/0127543 A1, (to University of Arizona).
46. EUROPA: Summaries of EU legislation, at http://europa.eu/scadplus/leg/en/lvb/l21082a.htm. Accessed March 2008.
47. B. Scott and P. Butler, “Packaging technologies with potential to reduce the amount of food thrown away,” WRAP, ref. INN0014-009, April 2006. Available at http://www.wrap.org.uk/downloads/Pckg_formats_food_waste_tech_18_Dec_MCB1.f00b8bf4.pdf. Accessed March 2008.
48. W. Llewellyn, “Retail Intelligence,” PIRA, 2007. Available at http://profitthroughinnovation.com/packaging/retail-intelligence.html. Accessed March 2008.

INTELLIGENT PACKAGING

Kit L. Yam
Paul T. W. Takhistov
Department of Food Science,
Rutgers University, New
Brunswick, New Jersey

Joseph W. Miltz
Department of Biotechnology &
Food Engineering,
Technion-Israel Institute of
Technology, Haifa, Israel

INTRODUCTION

To understand intelligent packaging, it is helpful to review the historical development of packaging. Traditionally, the basic functions of packaging have been classified into four categories (Figure 1), as follows: protection, communication, convenience, and containment (1, 2). The package is used to protect the product against the external environment, communicate with the consumer as a marketing tool, provide the consumer with greater ease of use and time-saving convenience, and contain products of various sizes and shapes. Nevertheless, these functions are not totally exclusive; for example, the communication function of the package through warning labels and cooking instructions can also help to enhance food protection and convenience.

Although traditional packaging has contributed greatly to the early development of the food-distribution systems, it is no longer sufficient because today's society is becoming increasingly complex. Innovative packaging with enhanced functions is constantly sought in response to the consumer demand for minimally processed foods with fewer preservatives, increased regulatory requirements, market globalization, concern for food safety, and more recently, the threat of food bioterrorism. How can the existing functions of a mature, and sometimes taken for granted, technology be enhanced? It probably requires rethinking and shifting in the existing paradigm (3). Active packaging and intelligent packaging are the results of "thinking outside the box."

During the past two decades, the popularity of active packaging (AP) has signified a major paradigm shift in packaging; namely, the protection function of packaging has been shifted from passive to active. Previously, primary packaging materials were considered as "passive," which means that they functioned only as an inert barrier to protect the product against oxygen and moisture. Recently, a host of new packaging materials have been developed that provide "active" protection to food products. AP has been defined as a system in which the product, the package, and the environment interact in a positive way to extend shelf life or to achieve some characteristics that cannot be obtained otherwise (4). It has also been defined as a packaging system that actively changes the condition of the package to extend shelf life or improve food safety or sensory properties, while maintaining the quality of the food (5).

All AP technologies involve some physical, chemical, or biological action for altering the interactions between the package, the product, and the package headspace to achieve a certain desired outcome (6, 7). Gas absorbing/emitting packaging (5, 8) is a group of technologies that uses packaging films or sachets to absorb gases (such as oxygen, water vapor, or ethylene) from the package headspace or to emit gases (such as carbon dioxide or ethanol) to the package headspace, so that a favorable internal package environment and thus an extension in shelf life are achieved. Controlled-release packaging is a group of technologies that uses packaging materials as a delivery system to release active compounds (such as antimicrobials, antioxidants, enzymes, flavors, and nutraceuticals) to protect against microbial spoilage and enhance food quality. Most attention in this group has been focused on antimicrobial packaging (9, 10) and antioxidant packaging (11, 12). Recently, an additional step forward was made by developing antimicrobial packages that contain natural instead of synthetic additives (13). Smart films are breathable films that enable the control of oxygen, water vapor, and carbon dioxide permeation at rates beneficial to modified atmosphere packaging of fresh produce (14). Microwave susceptors (15, 16) are metallized polyester-based structures that interact with microwaves to provide crispness and browning of foods during microwave heating.

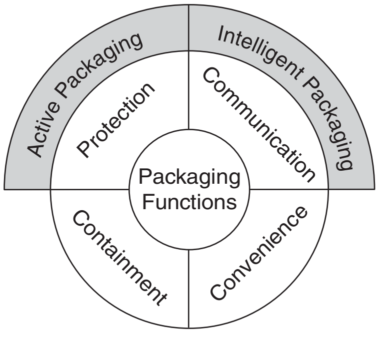

Figure 1. Model of packaging.

Active Packaging is placed above the protection function in the model of Figure 1. The placement reflects the situation that most AP technologies are aimed at and limited to enhancing the protection function of the package. This is not to say that AP does not provide other functions: For example, the microwave susceptor is an active packaging technology that provides convenience and food quality. Why were these technologies not simply described as a packaging system with enhanced protection functions, instead of inventing the term active packaging? An answer to this question is that this term has inspired researchers to develop innovative technologies by thinking packaging in a new way.

In recent years, the terms intelligent packaging (IP) and smart packaging (SP) have also begun to appear with increasing frequency in conferences, journals, and magazines. Unfortunately, clear and unequivocal definitions are not yet available in the scientific/technical literature. IP and SP are often used interchangeably at conferences and symposiums. Brody et al. (7), however, defined IP as a packaging system that senses and communicates, and they define SP as one that possesses the capabilities of both AP and IP. Clarke (17) defined smart packaging as one which communicates and intelligent packaging as one that includes logic capability. Rijk (18) defined IP as one that monitors the conditions of packaged foods to give information about the quality of the food during transport and storage. A major deficiency of these definitions is that the authors simply stated them without providing careful justifications.

In this article, we define intelligent packaging based on the historical development of packaging functions and a proposed conceptual framework. Specific examples are also presented to clarify the meaning of the definition.

DEFINITION OF INTELLIGENT PACKAGING

According to the American Heritage Dictionary, the word “intelligent” is defined as “showing sound judgment and rationality” and as “having certain data storage and processing capabilities.” A prerequisite of making sound decisions is effective communication—the ability to acquire, store, process, and share information—and this is where IP can make a significant contribution.

We define IP as a packaging system based on the science and technology that can carry out intelligent functions (such as detecting, sensing, recording, communicating, and applying scientific logic) to facilitate decision making and corrective actions to extend shelf life, enhance safety, improve quality, provide information, and warn about possible problems. We believe that the uniqueness of IP is in its ability to communicate. Because the package and the food move constantly together throughout the supply chain cycle, the package is the food’s best companion and is in the best position to communicate the conditions of the food. Accordingly, we place IP above the communication function in the model of Figure 1, building on the historical development of packaging functions. We have also developed a conceptual framework in the next section to delineate the anatomy of IP and provide more depth to its definition.

As alluded to earlier, the purpose of introducing intelligent packaging is to inspire people to expand the communication function of packaging in an innovative and useful way. The purpose of introducing the conceptual framework is to provide a roadmap to facilitate the systematic study to advance understanding and application in this field. Note that the definitions of AP and IP are not mutually exclusive: Some packaging systems may be classified either as AP or IP or both, but this situation does not detract the purpose of these terms. We have also been careful not to introduce other terms such as “responsive packaging” and “clever packaging,” because too many terms tend to complicate the already confusing terminology.

According to our definition, a package is “intelligent” if it has the ability to sense the environment and communicate with humans: For example, an intelligent package is one that can monitor the quality/safety condition of a food product and provide early warning to the consumer or food manufacturer. It is important to emphasize that IP is a product delivery system that involves not only the package but also the food product, the external environment, and other considerations. We believe that the emergence of IP has signified another paradigm shift in the concept of food packaging—shifting the package from a mediocre communicator to an intelligent communicator.

CONCEPTUAL FRAMEWORK OF INTELLIGENT PACKAGING

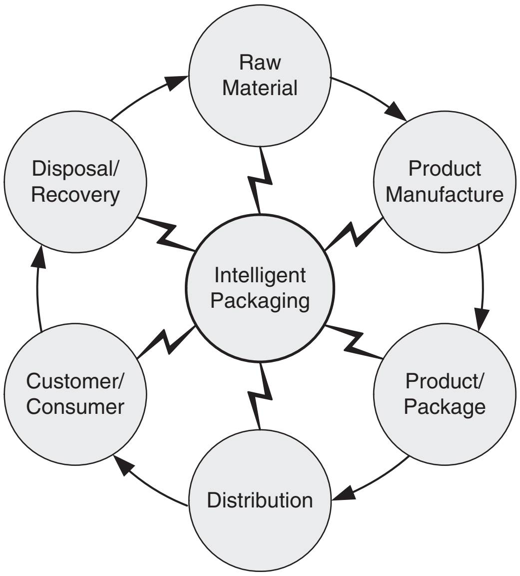

Figure 2. Material flow and information flow in the food supply chain.

Intelligent packaging can play an important role in facilitating the flows of both materials and information in the food supply chain cycle. In Figure 2, the outer circles represent the supply chain cycle from raw material through manufacturing, packaging, distribution, product use, and disposal. The package, in one form or another (such as a pouch, container, or drum, pallet), is traditionally used to facilitate the flow of materials (represented by the arrows in the figure) from one location to another, by performing the basic functions of containment and protection of the product. Furthermore, the package can also facilitate the flow of information (represented by the communication links between the inner circle and outer circles), although this communication function has been largely overlooked. The package can indeed be a highly effective communicator—it can carry actual information in the direction of material flow (e.g., via truck, train, or ship), and it can transmit information visually (e.g., via an indicator) or electronically (e.g., via a barcode or the Internet) throughout every phase of the supply chain cycle.

A conceptual framework describing the flow of information in an IP system is illustrated in Figure 3. The system consists of the following four components: smart package devices, data layers, data processing, and information highway (wire or wireless communication networks) in the food supply chain. The smart package devices are largely responsible for generating the concept of IP, because they impart the package with a new ability to acquire, store, and transfer data. The data layers, data processing, and information highway are collectively referred here as the *decision support system*.

As shown in Figure 3, the smart package devices and the decision support system are designed to work together to monitor changes in the internal and external environments of the food package and to communicate the conditions of the food product, so that timely decisions can be made and appropriate actions taken. From the quality and safety viewpoint, the external environment can be divided into the ambient, physical, and human environments (2), which are factors important for determining shelf life.

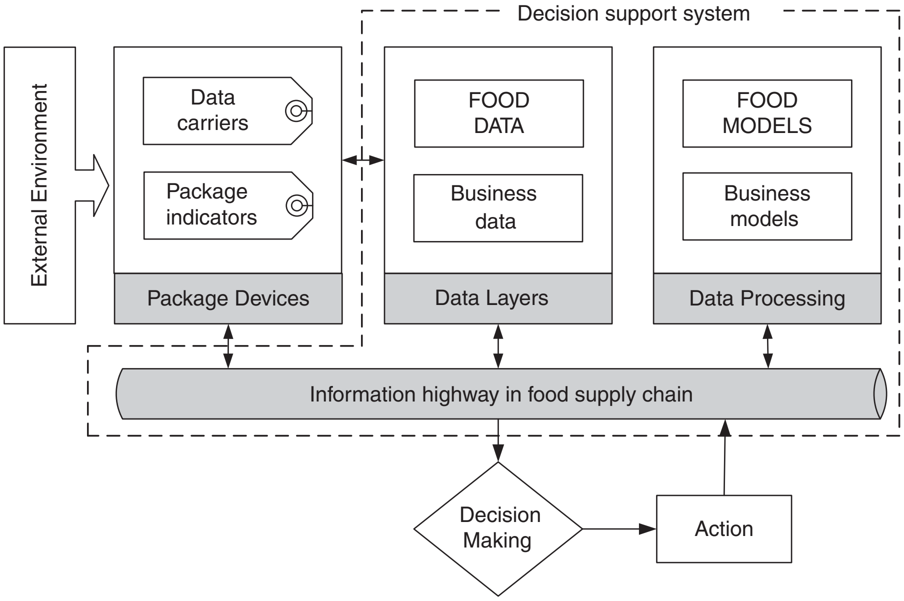

Figure 3. Information flow in the intelligent packaging system.

However, the business environment is also an important factor; in fact, the development of smart package devices (especially data carriers) and the information highway is largely motivated by the desire to increase profit and operational efficiency. Currently, business data (such as product identification, quantity, and price) and business models (rules for processing information to maximize profits) are incorporated into the system to facilitate product checkout, inventory control, and product traceability. It is interesting to note that just a decade ago, IP was not an attractive concept because package devices and computer networks were limited and expensive. Today, more powerful and affordable information technology has created a favorable environment for IP to flourish.

A challenging question to the food packaging scientist or technologist is whether more efficient delivery of safe and quality food products can also be achieved by superimposing an additional layer of *food data* and *food models* (capitalized in Figure 3) on the information highway of the food supply chain, which is the goal of IP. The food data refer to data that are indicative of food quality and safety (such as time-temperature history, microbial count, pH, and water activity), and the food models refer to scientific principles or heuristic rules for processing the food data to enable sound decision making. The answer to this question is likely positive, although significant research and development is needed before the potential of IP for enhancing food quality and safety could be fully realized.

SMART PACKAGE DEVICES

Smart package devices are defined here as small, inexpensive labels or tags that are attached onto primary packaging (e.g., pouches, trays, or bottles), or more often onto secondary packaging (e.g., shipping containers), to facilitate communication throughout the supply chain so that appropriate actions may be taken to achieve desired benefits in food quality and safety enhancement. Two basic types of smart package devices are *data carriers* (such as barcode labels and RFID tags) that are used to store and transmit data and *package indicators* (such as time-temperature indicators, gas indicators, biosensors) that are used to monitor the external environment and, whenever appropriate, issue warnings. As shown in Figure 3, these devices provide a communication channel between the external environment and other components in the system. These devices differ from each other not only in "hardware" (physical makeup) but also in the amount and type of data that can be carried and how the data are captured and distributed. In a typical IP system, multiple smart package devices are employed at several strategic locations throughout the supply chain.

Barcodes. Barcodes are the least expensive and most popular form of data carriers. The Universal Product Code (UPC) barcode was introduced in the 1970s and has since become ubiquitous in the grocery store for facilitating inventory control, stock reordering, and checkout (19). To enable barcodes to communicate with scanners and printers, many standards have been developed over the years into commonly accepted languages known as "symbologies," although less than 20 of them are used today (20). The UPC barcode is a linear symbology that consists of a pattern of bars and spaces to represent 12 digits of data. Its meager storage capacity allows the containment of only limited information such as manufacturer identification number and item number, which leaves no room for encoding additional information.

To address the growing demand for encoding more data in a smaller space, a new family of barcode symbologies called the Reduced Space Symbology (RSS) is recently being introduced (21). Some of those family members are particularly well suited for product identification at point-of-sell and for product traceability in the grocery industry (Figure 4). The RSS-14 Stacked omnidirectional barcode encodes the full 14-digit Global Trade Item Number

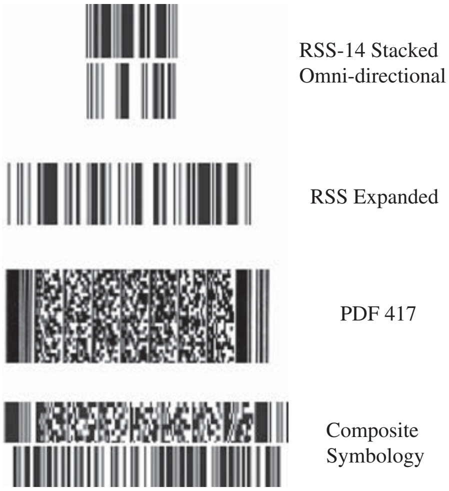

Figure 4. Examples of barcode symbologies.

(GTIN), and it may be used for loose produce items such as apples or oranges where space limitation requires a narrow symbol. The RSS Expanded Barcode (also available in stacked format) encodes up to 74 alphanumeric characters, and it may be used for variable measure products (e.g., meat and seafood that are sold by weight) where larger data capacity is required to encode additional information such as packed date, batch/lot number, and package weight.

As scanners are becoming more powerful and affordable, two-dimensional (2-D) barcodes (Figure 4) are also gaining popularity. The PDF 417 (where PDF stands for Portable Data File) is a 2-D symbol that carries up to 1.1 kb of data in a space of a UPC barcode (22). It allows the encoding of additional information not possible with linear barcodes, such as nutritional information, cooking instructions, website address of food manufacturer, and even graphics. The advantage of portable data is that they are available immediately, without having to access an external database. To provide more versatility, the Uniform Code Council has also introduced a new symbology called Composite Symbology (Figure 4) by combining a 2-D barcode such as PDF 417 with a linear barcode such as UPC (23).

With the advent of wireless handheld barcode scanners, barcode scanning is finding new and innovative applications. In the hospital, barcodes may be used to ensure that the right medication is given to the right patient at the right time and dosage (24). Immediately prior to administrating, the medication barcode and patient's identification tags are scanned, and the information is sent over a wireless Local Area Network (LAN) to check for accuracy.

Radio Frequency Identification (RFID) Tags. The RFID tag is an advanced form of data carrier for automatic product identification and traceability. Although RFID has been available for many years for tracking expensive items and livestock (25), its broad application in packaging has only begun in recent years. In a typical RFID system, a reader (or interrogator) emits radio waves to capture data from a RFID tag, and the data are then passed onto a host computer (which may be connected to a local network or to the Internet) for analysis and decision making (26). Inside the RFID tag is a minuscule microchip connected to a tiny antenna. RFID tags may be classified into the following two types: passive tags that have no battery and are powered by the energy supplied by the reader and active tags that have their own battery for powering the microchip's circuitry and broadcasting signals to the reader. The more expensive active tags have a reading range of 100 ft. or more, whereas the less expensive passive tags have a reading range of up to 15 ft. The actual reading range depends on many factors including the frequency of operation, the power of the reader, and the possible interference from metal objects. At the time of this writing, a passive tag costs between 50¢ and $1 depending on the quantity ordered, but the industry is working to reduce it to 5¢ in the next few years (27). An active tag costs as much as $75, but the cost is expected to decrease rapidly (27).

Compared with the barcode, the RFID tag has several unique characteristics. Line of sight is usually not required: That is, the RFID tag does not need to be oriented toward the reader for data transfer to occur because radio waves travel through a wide array of nonmetallic materials. A significantly larger data storage capacity is available (up to 1 MB for high-end RFID tags), which may be used to store information such as temperature and relative humidity data, nutritional information, and cooking instructions. Read-write operations are supported by some RFID tags, which are useful in providing real-time information updates as the tagged items move through the supply chain. Multiple RFID tags may be read simultaneously at a rapid rate. Nevertheless, the RFID tag is generally not considered as a replacement for the barcode. Because both data carriers have advantages and disadvantages, they will continue to be used either alone or in combination, depending on the situation. A RFID tag may also be integrated with a time-temperature indicator or a biosensor to carry time-temperature history and microbiological data (28, 29).

In recent years, there has been an overwhelming interest from major retailers, companies, government agencies, and researchers in using RFID tags for various applications, such as supply chain management, asset tracking, security control, and feed pattern of live stocks (30–33). An impetus for this technology is that several major retailers, including Wal-Mart Stores and Metro Group, have issued mandates requiring their leading suppliers to use RFID tags on shipping crates and pallets. Such mandates are accelerating the adoption of the technology and future development of the RFID information highway.

A large amount of information on RFID is scattered in online journals (more notably, the Smart Packaging Journal and the RFID Journal), white papers published by technology companies (34–36), and the Internet. On the contrary, limited information on RFID was found in peer-reviewed scientific journals, particularly those relating to food science. This fact does not imply that food science knowledge is not important. It simply reflects that this technology is still at its early stages of implementation, and currently, the focus is on simple tasks such as product identification and tracking, and not on complicated matters that involve the application of scientific food principles. When the RFID technology will become more established, the integration of food science knowledge will be required to develop the necessary decision support system for enhancing food safety and quality.

Time-Temperature Indicators. Temperature is usually the most important environmental factor influencing the kinetics of physical and chemical deteriorations, as well as microbial growth in food products. Time-temperature indicators (TTIs) are typically small self-adhesive labels attached onto shipping containers or individual consumer packages. These labels provide visual indications of temperature history during distribution and storage, which is particularly useful for warning of temperature abuse for chilled or frozen food products. They are also used as "freshness indicators" for estimating the remaining shelf life of perishable products. The responses of these labels are usually some visually distinct changes that are temperature dependent, such as an increase in color intensity and diffusion of a dye along a straight path. Three basic types of commercially available TTIs are critical temperature indicators, partial history indicators, and full history indicators (37). Their operating principles and performance have been reviewed extensively in the literature (38–43).

In the early 1990s, Lifelines Technologies (Morris Plains, New Jersey) demonstrated a concept of using a laser optical wand to scan a TTI/barcode label to obtain product information and temperature history simultaneously (39). The concept was unfortunately not embraced by the industry at that time, because scanners were expensive and the information highway in the supply chain was not ready to support this innovation. Today, powerful and affordable scanner and wireless technologies have provided a more favorable environment for companies to develop advanced TTI systems for tracking and controlling the quality of perishable food products (44). For example, Bioett (Lund, Sweden) has developed a TTI/barcode system in which data may be read by a handheld scanner, displayed on a computer monitor, and downloaded into a database for analysis (45). KSW Microtec (Dresden, Germany) has developed a battery-powered TTI/RFID tag using a technology in which thin-film batteries are printed onto a flexible substrate (46, 47). Infratab (Oxnard, California) is also developing a battery-powered TTI/RFID tag (2003). Unlike the traditional TTI that is based on diffusion or a biochemical reaction, the TTI/RFID tag uses a microchip to sense and integrate temperature over time to determine the shelf life of a product.

Gas Indicators. The gas composition in the package headspace often changes as a result of the activity of the food product, the nature of the package, or the environmental conditions. For example, respiration of fresh produce, gas generation by spoilage microorganisms, or gas transmission through the packaging material or package leaks may cause the gas composition inside the package to change. Gas indicators in the form of a package label or printed on packaging films can monitor changes in the gas composition, thereby providing a means of monitoring the quality and safety of food products.

Oxygen indicators are the most common gas indicator for food packaging applications, because oxygen in air can cause oxidative rancidity, color change, and microbial spoilage. Several oxygen indicators are designed to show color changes caused by leaking or tampered packages (48, 49). Ahvenainen et al. (50) and Smiddy et al. (51) used oxygen indicators to detect improper sealing and quality deterioration of modified atmosphere packages containing pizza or cooked beef. Gas indicators for water vapor, carbon dioxide, ethanol, hydrogen sulfide, and other gases are also useful. For example, Hong and Park (52) used a carbon dioxide indicator that consisted of a carbon dioxide absorbent and a chemical dye in a polymeric film to measure the degree of fermentation in kimchi products during storage and distribution.

It is expected that the future integration of gas indicators into barcode labels or RFID tags will enable gas indicator signals to be transmitted not only visually but also electronically. Advances in smart ink and printing technology will also allow gas indicators to be read automatically using optical systems from a distance.

Biosensors. The broad spectrum of foodborne infections is changing constantly over time as most known pathogens are controlled and new ones have emerged. Rapid, accurate, on-line sensing is needed for *in situ* analysis of pollutants, detection and identification of pathogens, and monitoring of postprocessing food quality parameters.

In general, a biosensor is a compact analytical device that detects, records, and transmits information pertaining to biochemical reactions. This smart device consists of two primary components: a bioreceptor that recognizes a target analyte and a transducer that converts biochemical signals into a quantifiable electrical response. The bioreceptor is an organic or biological material such as an enzyme, antigen, microbe, hormone, or nucleic acid. The transducer can assume many forms (such as electrochemical, optical, or acoustic) depending on the parameters being measured. Some important characteristics of a biosensor are its specificity, sensitivity, reliability, portability, and simplicity. Matrubutham and Sayler (53), Simonian et al. (54), D'Souza et al. (55), and Velasco-Garcia and Mottram (56) have reviewed the principles and potential applications of biosensors. Alocilja and Radke (57) have analyzed the pathogen detection industry and concluded that biosensors are a growing market. This article relates primarily to biosensors that can be placed inside the food package or integrated into the packaging material, although there are also handheld or desktop biosensors.

Presently, commercial biosensors for intelligent packaging are not available, although several prototypes are being developed. For example, SIRA Technologies (Pasadena, California) is developing a biosensor/barcode called Food Sentinel System to detect pathogens in food packages (35, 58). In this system, a specific-pathogen antibody is attached to a membrane forming part of the barcode; the presence of contaminating bacteria will cause the formation of a localized dark bar, which renders the barcode unreadable during scanning. Toxin Alert (Ontario, Canada) is also developing a diagnostic system called Toxin Guard that incorporates antibodies into plastic packaging films to detect pathogens (59–61). When the antibodies encounter a target pathogen, the packaging material displays a clear visual signal to alert the consumer, retailer, or inspector. This system is intended for detecting gross contamination, because it is not sensitive enough for detecting low levels of pathogens that can cause disease.

APPLICATIONS OF INTELLIGENT PACKAGING

Enhancing Food Safety and Biosecurity. Intelligent packaging, especially when integrating with science-based principles, is a useful tool for tracking products and monitoring their conditions, facilitating real-time data access and exchange, and enabling rapid response and timely decision making. These qualities are essential for any food safety or biosecurity strategy. The applications of IP in enhancing traceability systems and Hazard Analysis Critical Control Points (HACCP) systems are discussed below.

Traceability, tracking, and record keeping of product flow through the production process and supply chain is generally considered key in enhancing food safety and biosecurity (62–64). The existing traceability systems vary in breadth, depth, and precision; these terms refer to what data are recorded, how far backward or forward along the supply chain are the data tracked, and how precisely is the product location pinpointed, respectively (64). Because tracing all information with high precision is virtually impossible, only a limited set of variables is usually traced. In tracing beef, for example, variables such as global trade item number, batch/lot number, and country of origin are recommended (65). However, these variables do not provide technical information about the safety and quality of the food product.

Intelligent packaging could be integrated into existing traceability systems to create more effective communication links. Bar codes and RFID tags can enable electronic recordkeeping and information sharing, especially when interfaced with external instruments that can rapidly measure quality attributes and monitor food safety. For example, pH meters, water activity meters, rapid microbial detection devices (66, 67), or nondestructive quality measurement instruments (68, 69) may be placed at strategic locations along the supply chain where they exchange data with read/write bar codes or RFID tags. Nevertheless, increasing the breath and depth of a traceability system alone is not sufficient to improve food safety; science-based food models and user-friendly software are also required to utilize fully the additional food-related data layer available.

In recent years, HAACP has become an internationally recognized system for managing the risk associated with food safety. HAACP is a science-based system that consists of the following seven principles: conduct hazard analysis, determine critical control points, establish critical limits, establish monitoring procedures, establish corrective actions, establish verification procedures, and establish record keeping and documentation procedures (70). The implementation of these principles requires storing, sharing, and processing information so that timely decision and corrective actions could be made.

Figure 5 outlines a system based on the conceptual framework of IP and HACCP principles for managing information flow and ensuring food safety. An important point about this system is that information is shared among multiple devices at multiple locations. Information obtained from multiple devices and multiple locations, especially when the devices are interconnected, is far more useful than information obtained from a single device and at a single location. It is generally recognized that microbial detection alone is not a complete solution to ensure food safety; however, when it is coupled with physical and chemical measurements, timely detection

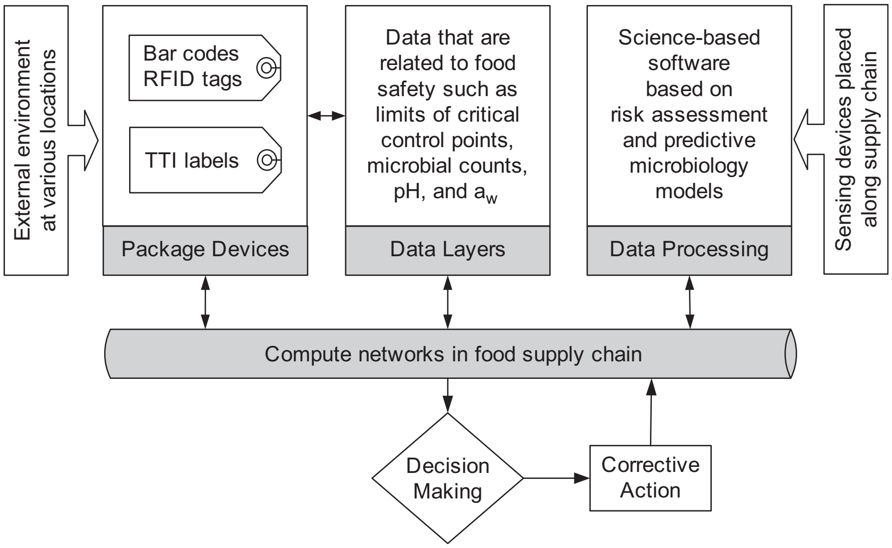

Figure 5. An example of the intelligent packaging and HACCP system.

and correction of safety problems may be achieved more readily. The multiple devices include smart package devices coupled with sensing devices such as pH meters and water activity meters that are placed along the supply chain.

When applying the HACCP principles, special attention should be paid to designing the decision support system. The hazard analysis should determine not only the flow of materials but also the flow of information. The critical control points, as well as the sensing devices required at specific locations, should be identified. The limits of critical control points (such as time and temperature) may be encoded in bar codes or RFID tags to enable electronic data retrieval. Monitoring the critical control points may be achieved by using TTI labels or other sensing devices at strategic locations. Read/write RFID tags and computer networks may facilitate record keeping and documentation. Decision for corrective actions may be facilitated using data processing software, which should incorporate science-based knowledge such as risk assessment and predictive microbiology models (71, 72). The development of an IP-based HACCP system is in the early stages, and significant research work is needed for its future development and implementation.

Enhancing Food Quality and Convenience. The current application of IP has been focused mostly on using TTI labels to monitor temperature, although many other applications are also possible. For example, it may be applied to cooking appliances such as the intelligent microwave oven system shown in Figure 6 (73). The uniqueness of this system is in its use of information sharing to enhance food quality and convenience. The PDF 417 barcode in the package carries data about the food product, and the data processing system generates the proper heating instructions for the microwave oven. Information exchange also occurs through the user interface (such as a touch screen or voice recognition system) and the Internet.

Because microwave ovens come in different sizes and power outputs, the heating instructions printed on microwaveable food packages are obviously vague to accommodate the many different ovens in the market. Using these vague instructions often does not allow for achievement of good food quality. This problem may be overcome by scanning the bar code to enable the decision support system to match the microwave oven and the food package. To achieve a higher level of quality, temperature and moisture sensors may be placed inside the microwave oven to provide feedback for the data processing system.

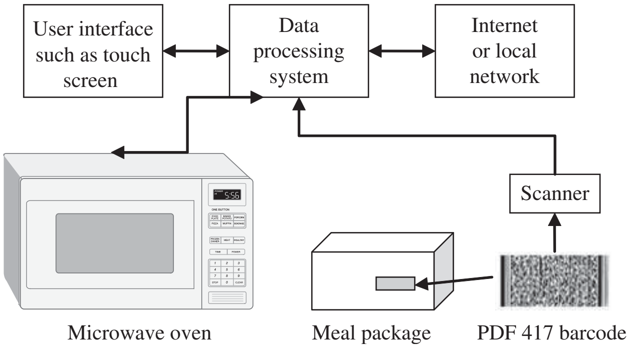

Figure 6. Intelligent microwave oven system.

Scanning the bar code eliminates the need for entering the heating instructions. This technique is particularly useful for microwave/convective ovens that use complicated instructions. These combination ovens can provide higher food quality than the conventional microwave ovens, but their heating instructions involve multiple steps because both microwave energy and convective heat are employed. Scanning the bar code is also helpful for people who are visually impaired or have difficulties in understanding the language. The Internet connection provides convenient access to information relating to the packaged food such as the manufacturer's website, recipes, food allergen information, and product recall.

The development of the intelligent microwave oven system requires the application of scientific knowledge to design the data layers and the data processing system. The data layers should contain information relating to the food, package, and microwave oven. The architecture of the data layers could be rather complicated because data may enter the system in different ways. For example, the food manufacturer may encode the food and packaging information in the bar code, the oven manufacturer may store the oven information in a database connected to the information processing system, the consumer may enter his or her preferences through the touch screen, and information may be exchanged via the Internet. The data processing system should include algorithms that are based on heat transfer principles and heuristic rules relating to food quality and safety to generate instructions for controlling the magnetron and turntable (if available) of the microwave oven. In addition, the algorithms may have also other abilities such as obeying the requirement or preferences of the consumer, warning the consumer against food allergens, and tracking the dietary intake of the consumer.

RESEARCH ROADMAP

Future research is needed to ensure the safe and smooth adoption of intelligent packaging. In developing a research agenda, the conceptual framework in Figure 3 may be used as a roadmap, and the role of IP in relation to AP and traditional packaging in the model of packaging functions (Figure 1) should be considered. Conducting the research frequently requires a system approach involving interactions between researchers in food packaging, food engineering, biotechnology, microelectronics, software engineering, nanotechnology, and other disciplines. Discussed below are some recommended future research areas.

- Development of Decision Support System. In the business world, decision support systems are now available for analyzing data and facilitating decision making. However, those decision support systems are

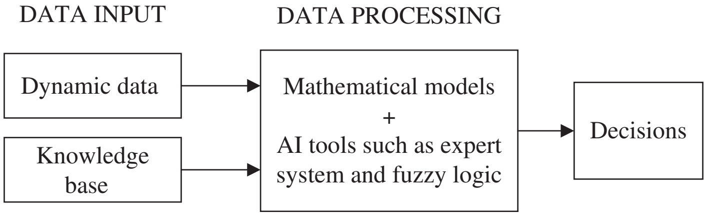

Figure 7. Block diagram for a decision support system.

not adequate for intelligent packaging applications—what is lacking is the scientific knowledge necessary for food quality and safety enhancement. Although a vast amount of scientific knowledge is available in journals such as the Journal of Food Science, more research is still needed to transform it to a form that can be incorporated into the data layer and food models for the IP system. Traditionally, mathematical models (e.g., kinetic models for quality deterioration and microbial growth) have been useful for quantitatively describing the existing knowledge of food systems, but those models alone are often not sufficient to handle complex real-time data from multiple package devices at multiple locations. To compensate for this deficiency, artificial intelligence (AI) tools such as knowledge-based expert systems, fuzzy logic, inductive learning, and neural networks may also be used (74). These AI tools are designed to deal with complex real-life data and transfer expert knowledge, in the form of rules-of-thumb, to quantitative functions that can be processed by computers. The utility of those tools have recently been demonstrated for microbial growth modeling (75), food processing (76), controlling cheese ripening (77), and other food applications (78).

- Yam and Saba (79) has also described a decision support system for modified atmosphere packaging for fresh produce, with the goal of extending the shelf life of product by creating and maintaining a desirable modified atmosphere inside the package. This complicated system involves many variables and the dynamic interactions among the respiring product, package, and distribution environment. The product parameters include the respiration rates for O_2 consumption and CO_2 evolution, the product weight, and the optimum modified atmosphere for the product; the package parameters include the O_2 and CO_2 permeabilities, package thickness, and package surface area; the distribution environment parameters include temperature and relative humidity. A challenge is to deal with these many complex, constantly changing variables. Figure 7 shows the block diagram of a generic decision support system that may be used for this and other food packaging applications. The *data input* consists of dynamic data and data from the knowledge base. Examples of dynamic data are the climatic conditions and respiring rates; the quality of the produce can change daily and are preferably monitored with sensing devices. Examples of data stored in the knowledge base are the gas permeabilities of packaging films, package dimensions, and regulations that are not likely to change daily or weekly. However, the knowledge base will be updated periodically, for example, when the regulation has changed or when a new packaging material is available. The data processing consists of mathematical models and AI tools. The mathematical models are those based on the scientific principles describing the interactions among the respiration of the produce, the O_2 and CO_2 permeabilities of the package, and environment conditions (14). The AI tools may include fuzzy logic sets containing rules or algorithms for dealing with ambiguous and difficult situations that are not easily reduced to mathematical models. The mathematical models and AI tools work together to enable more rapid and reliable decision making.
- Additional Development of Smart Package Devices. Smaller, less expensive, and more powerful smart package devices are needed to meet the market needs. Many advanced smart package devices such as biosensor and biosensor/RFID are still in the prototype development stage. Most existing biosensor prototypes have limitations such as slow response time and short shelf life; however, exciting research opportunities exist in combining biotechnology and nanotechnology to develop biosensors to overcome these and other limitations (80). The integration of TTIs and gas indicators with barcodes and RFID tags requires future research and development. Standards are also needed to enable the efficient communication among smart package devices.
- Integration of IP into Total Packaging System. IP is only one component in the total packaging system (Figure 1), and thus it must be integrated smoothly and efficiently with other system components. Exciting research opportunities exist in combining IP and AP; for example, an active/intelligent packaging system may use a TTI/biosensor to sense the environment, and whenever necessary, release an active compound (such as antimicrobial or antioxidant) to extend the shelf life of the food.

CONCLUSIONS

Intelligent packaging is emerging as a new branch of packaging science and technology that offers exciting opportunities for enhancing food safety, quality, and convenience. The advancement in this technology will require researchers to continue think outside the box and use nontraditional packaging approaches to meet new challenges. For the first time, packaging science, food engineering, biotechnology, information technology, nanotechnology, and other disciplines are coming together to develop a breakthrough packaging technology. As this technology is unfolding, issues such as those relating to legislation, consumer acceptance (relating to privacy, for example), and economics also need to be addressed.

REFERENCES

1. F. A. Paine, *The Packaging User's Handbook,* Van Nostrand Reinhold, New York, 1991.
2. G. L. Robertson, *Food Packaging: Principles and Practice*, Marcel Dekker, New York, 1993.
3. T. S. Kuhn, *The Structure of Scientific Revolutions*, University of Chicago Press, Chicago, IL, 1996.
4. J. Miltz, N. Passy, and C. H. Mannheim, "Trends and Applications of Active Packaging Systems," in P. Ackerman, M. Jagerstad, and M. Ohlsson, eds., *Food and Packaging Materials—Chemical Interaction*, The Royal Society of Chemistry, London, UK, 1995.
5. L. Vermeiren, F. Devlieghere, M. van Beest, N. de Kruijf, and J. Debevere, "Developments in the Active Packaging of Foods," *Trends Food Sci. Technol.* **10**, 77–86 (1999).
6. M. L. Rooney, *Active Food Packaging*, Blackie Academic & Professional, New York, 1995.
7. A. L. Brody, E. R. Strupinsky, and L. R. Kline, *Active Packaging for Food Applications*, Technomic Publishing, Lancaster, PA, 2001.
8. J. P. Smith, J. Hoshino, and Y. Abe, "Interactive Packaging Involving Sachet Technology," in M. L. Rooney, ed., *Active Food Packaging*, Blackie Academic and Professional, London, UK, 1995.
9. P. Appendini and J. H. Hotchkiss, "Review of Antimicrobial Food Packaging," *Inn. Food Sci. Emer. Technol.* **3**, 113–126 (2002).
10. P. Suppakul, J. Miltz, K. Sonneveld, and S. W. Bigger, "Active Packaging Technologies with an Emphasis on Antimicrobial Packaging and Its Applications," *J. Food Sci.* **68**, 408–420 (2003).
11. J. Miltz, P. Hoojjat, J. K. Han, J. R. Giacin, B. R. Harte, and I. J. Gray, "Loss of Antioxidants from High-Density Polyethylene: Its Effect on Oatmeal Cereal Oxidation," in J. H. Hotchkiss, ed., *Food and Packaging Interactions*, American Chemical Society, Washington, DC, 1988.
12. C. Wessling, T. Nielsen, and J. R. Giacin, "Antioxidant Ability of BHT- and a-Tocopherol Impregnated LDPE Film in Packaging of Oatmeal," *J. Sci. Food Agr.* **81**, 194–201 (2000).
13. P. Suppakul, J. Miltz, K. Sonneveld, and S. W. Bigger, "Antimicrobial Properties of Basil and Its Possible Application in Food Packaging," *J. Agr. Food Chem.* **51**, 3197–207 (2003).
14. K. L. Yam and D. S. Lee, "Designing Modified Atmosphere Packaging for Fresh Produce," in M. L. Rooney, ed., *Active Packaging*, Blackie Academic and Professional, New York, 1995.
15. H. Zuckerman and J. Miltz, "Temperature Profiles in Dough Heated with a Susceptor in the Microwave Oven," *J. Food Proc. Pres.* **22**, 53–65 (1998).
16. N. Waite, *Active Packaging*, Pira International, Surrey, UK, 2003.
17. R. Clarke, "Radio Frequency Identification: Smart or Intelligent Packaging?" *J. Pack. Sci. Technol.* **9**, (2000).
18. R. Rijk, "Active and Intelligent Packaging Development," in *Plastics and Polymers in Contact with Foodstuffs*, Pira International, Edinburgh, Scotland, 2002.
19. V. Manthou and M. Vlachopoulou, "Bar-Code Technology for Inventory and Marketing Management Systems: A Model for Its Development and Implementation," *Int. J. Prod. Econ.* **71**, 157–164 (2001).
20. S. Pearce and R. D. Bushnell, *The Bar Code Implementation Guide: Using Bar Codes in Distribution*, Quad II, Inc., Surf City, NJ, 1997.
21. Uniform Code Council, "Small Symbologies (RSS and Composite)." Accessed April 3, 2004. http://www.uc-council.org/ean_ucc_system/stnds_and_tech/small_sym.html.
22. Anonymous, "PDF417: The New Symbol of Data Management," White paper, Symbol Technologies, Inc., Holtsville, NY.
23. Anonymous, "Reduced Space Symbology (RSS), Composite Symbology (CS) and Your Business," White paper, Symbol Technologies Inc., Holtsville, NY, 2002.
24. Anonymous. "The Wireless Hospital Extending the Reach of Your Information System Directly to the Point of Activity," White paper, Symbol Technologies Inc., Holtsville, NY, 2001.
25. Anonymous, "Increasing Profits and Productivity: Accurate Asset Tracking and Management with Bar Coding and RFID," White paper, Zebra Technologies, Vernon Hill, IL, 2003.
26. R. Want, "RFID: A Key to Automating Everything," *Sci. Am.* **290**, 56–65 (2004).
27. P. M. Goodrum and M. McLaren, "A Review of Smart Chip Implementation and Pilot Project at University of Kentucky: A Report to the Electrical Contracting Foundation," University of Kentucky, Lexington, KY, 2003.
28. S. Nambi, S. Nyalamadugu, S. M. Wentworth, and B. A. Chin, "Radio Frequency Identification Sensors," *7th World Multiconference on Systemics, Cybernetics and Informatics*, Dubna, Russia, July 30–August 2, 2003.
29. R. Want, "Enabling Ubiquitous Sensing with RFID," *Computer* **37**, 84–86 (2004).
30. K. S. Schwartzkopf-Genswein, C. Huisma, and T. A. McAllister, "Validation of a Radio Frequency Identification System for Monitoring the Feeding Patterns of Feedlot Cattle," *Livest. Prod. Sci.* **60**, 27–31 (1999).
31. M. A. Falkman, "RFID Smart Labels Track Chilled Foods Door to Door," *Pack. Dig.* **November**, 82 (2000).
32. Anonymous, "Increasing Profits and Productivity: Accurate Asset Tracking and Management with Bar Coding and RFID," White paper, Zebra Technologies Inc., Vernon Hill, IL, 2003.
33. Anonymous, Highlights of the Intelligent and Smart Packaging Conference, Las Vegas, NV, January 27–28, 2004, *Sm. Pack. J.* **18**, 1–14 (2004).
34. Anonymous, "RFID: The Next Generation of AIDC," White paper, Zebra Technologies Inc., Vernon Hill, IL, 2004.
35. Anonymous, "Zebra's RFID Readiness Guide: Complying with RFID Tagging Mandates," White paper, Zebra Technologies Inc., Vernon Hill, IL, 2004.
36. M. Linster, J. Liu, and V. Sundhar, "RFID in the Supply Chain: Improving Performance Through Greater Visibility," White paper, Avicon, Maynard, MA, 2004.
37. R. P. Singh, "Scientific Principles of Shelf-Life Evaluation," in D. Man and A. Jones, eds., *Shelf-Life Evaluation of Food,* 2nd ed., Aspen Publishers, Gaithersburg, MD, 2000.

38. R. P. Singh and J. H. Wells, "Use of Time-Temperature Indicators to Monitor Quality of Frozen Hamburger," *Food Technol*. **39**, 42–50 (1985).
39. P. S. Taoukis, B. Fu, and T. P. Labuza, "Time-Temperature Indicators," *Food Technol*. **45**, 70–82 (1991).
40. J. D. Selman, "Time-Temperature Indicators," in M. L. Rooney, ed., *Active Food Packaging*, Blackie Academic & Professional, New York, 1995.
41. W. L. Claeys, A. M. Van Loey, and M. E. Hendrickx, "Intrinsic Time Temperature Integrators for Heat Treatment of Milk," *Trends Food Sci. Tech.* **13**, 293–311 (2002).
42. P. S. Taoukis and T. P. Labuza, "Time-Temperature Indicators (TTIs)," in R. Ahvenainen, ed., *Novel Food Packaging Techniques*, Woodhead Publishing Limited, Cambridge, UK, 2003.
43. M. Smolander, H. -L.Alakomi, T. Ritvanen, J. Vainionpaa, and R. Ahvenainen, "Monitoring of the Quality of Modified Atmosphere Packaged Broiler Chicken Cuts Stored in Different Temperature Conditions: Time-Temperature Indicators as Quality-Indicating Tools," *Food Cont*. **15**, 217–229 (2004).
44. N. Bhushan and K. Gummaraju, "A Petri Net Based Simulation Approach for Evaluating Benefits of Time Temperature Indicator and Wireless Technologies in Perishable Goods Retail Management," Infosys Technologies Limited, Bangladore, India, 2004. Accessed April 29, 2004. http://www.infy.com/knowledge_capital/thought-papers/ENG-17.pdf.
45. Anonymous, "Monitor Your Cold Chain," *Bioett*. Accessed May 18, 2004. http://www.bioett.com/pdf/bioett.pdf.
46. Z. Nitzan, "Flexible Thin Layer Open Electrochemical Cell and Applications of Same," U.S Patent 5,897,522 (1999).
47. J. Collins, "Active RFID Labels for the Masses," *RFID J* (2003), Accessed May 1, 2004. http://www.rfidjournal.com/article/articleview/555/1/1/.
48. K. C. Krumhar and M. Karel, "Visual Indicator System," U.S. Patent 5,096,813 (1992).
49. Y. Inoue, H. Hatakeyama, and I. Yoshino, "Oxygen Indicator," U.S. Patent 5,358,876 (1994).
50. R. Ahvenainen, M. Eilamo, and E. Hurme, "Detection of Improper Sealing and Quality Deterioration of Modified-Atmosphere-Packed Pizza by a Colour Indicator," *Food Cont.* **8**, 177–184 (1997).
51. M. Smiddy, M. Fitzgerald, J. P. Kerry, D. B. Papkovsky, C. K. O' Sullivan, and G. G. Guilbault, "Use of Oxygen Sensors to Non-Destructively Measure the Oxygen Content in Modified Atmosphere and Vacuum Packed Beef: Impact of Oxygen Content on Lipid Oxidation," *Meat. Sci.* **61,** 285–290 (2002).
52. S. -I. Hong and W. -S. Park, "Use of Color Indicators as an Active Packaging System for Evaluating Kimchi Fermentation," *J. Food Eng*. **46**, 67–72 (2000).
53. U. Matrubutham and G. S. Sayler, "Microbial Biosensors Based on Optical Detection," in A. Mulchandani, and K. R. Rogers, eds., *Enzyme and Microbial Biosensors: Techniques and Protocols*, Humana Press, Totowa, NJ, 1998.
54. A. L. Simonian, E. I. Rainina, and J. R. Wild, "Microbial Biiosensors Based on Potentiometric Detection," in A. Mulchandani and K. R. Rogers, eds., *Enzyme and Microbial Biosensors: Techniques and Protocols*, Humana Press, Totowa, NJ, 1998.
55. S. F. D'Souza, "Microbial Biosensors," *Biosens Bioelect* **16**, 337–353 (2001).
56. M. N. Velasco-Garcia and T. Mottram, "Biosensor Technology Addressing Agricultural Problems," *Biosys. Eng*. **84**, 1–12 (2003).
57. E. C. Alocilja and S. M. Radke , "Market Analysis of Biosensors for Food Safety," *Biosens. Bioelect*. **18**, 841–846 (2003).
58. C. E. Ayala and D. L. Park, "New Bar Code Will Help Monitor Food Safety," *The Magazine of the Louisiana Agricultural Experiment Station* **43**, 8 (2000).
59. Anonymous, "Now you can see your fish isn't foul without opening the pack," *New Sci* (2000). Accessed May 20, 2004. http://www.toxinalert.com/news.php?p = 2,
60. W. T. Bodenhamer, "Method and Apparatus for Selective Biological Material Detection," U.S. Patent 6,376,204 (2002).
61. W. T. Bodenhamer, G. Jackowski, and E. Davies, "Surface Binding of an Immunoglobulin to a Flexible Polymer Using a Water Soluble Varnish Matrix," U.S. Patent 6,692,973 (2004).
62. Anonymous, "Traceability in the Food Chain," Food Standards Agency, London, UK, 2002.
63. Anonymous, "Traceability Management Tools for Agriculture, Food and Beverage Products," *EAN Int,* (2004). Accessed April 30, 2004. http://www.ean-int.org/data1/Traceability%20DEF18_2_04.pdf.
64. E. Golan, B. Krissoff, F. Kuchler, L. Calvin, K. Nelson, and P. Gregory, "Traceability in the U.S. Food Supply: Economic Theory and Industry Studies," U.S. Department of Agriculture, Washington, DC, 2004.
65. Anonymous, "Traceability of Beef," *EAN Int*, Brussels, Belgium, 2002.
66. J. Guan and R. E. Levin, "Quantitative Detection of Escherichia Coli O157:H7 in Ground Beef by the Polymerase Chain Reaction," *Food Microbiol*. **19**, 159–165 (2002).
67. A. A. Bhagwat, "Rapid Detection of Salmonella from Vegetable Rinse-Water Using Real-Time PCR," *Food Microbiol*. **21**, 73–78 (2004).
68. R. Lu, "Multispectral Imaging for Predicting Firmness and Soluble Solids Content of Apple Fruit," *Postharvest Biol. Technol*. **31**, 147–157 (2004).
69. S. Saranwong, J. Sornsrivichai, and S. Kawano, "Prediction of Ripe-Stage Eating Quality of Mango Fruit from Its Harvest Quality Measured Nondestructively by Near Infrared Spectroscopy," *Postharvest Biol. Technol*. **31**, 137–145 (2004).
70. National Advisory Committee on Microbiological Criteria for Foods, "Hazard Analysis and Critical Control Point Principles and Application Guidelines," *J. Food Protect*. **61**, 762–775 (1998).
71. T. A. McMeekin, J. Olley, D. A. Ratkowsky, and T. Ross, "Predictive Microbiology: Towards the Interface and Beyond," *Int. J. Food Microbiol*. **73**, 395–407 (2002).
72. Anonymous, "Pathogen Modeling Program (Version 7.0)," *U.S. Department of Agriculture.* (2004). Accessed April 15, 2004. www.arserrc.gov/mfs/pathogen.htm.
73. K. L. Yam, "Intelligent Packaging and the Future Smart Kitchen," *Pack. Technol. Sci*. **13,** 83–85 (2000).
74. D. T. Pham and P. T. N. Pham, "Artificial Intelligence in Engineering," *Int. J. Mach. Tool. Manufact*. **39**, 937–949 (1999).
75. S. Jeyamkondan, D. S. Jayas, and R. A. Holley, "Microbial Growth Modelling with Artificial Neural Networks," *Int. J. Food Microbiol*. **64**, 343–54 (2001).
76. J. S. Torrecilla, L. Otero, and P. D. Sanz, "A Neural Network Approach for Thermal/Pressure Food Processing," *J. Food Eng*. **62**, 89–95 (2004).
77. N. Perrot, L. Agioux, I. Ioannou, G. Mauris, G. Corrieu, and G. Trystram, "Decision Support System Design Using the Operator Skill to Control Cheese Ripening—Application of

the Fuzzy Symbolic Approach," *J. Food Eng*. **64**, 321–333 (2004).

78. S. Linko, "Expert Systems—What Can They Do for the Food Industry?" *Trends. Food Sci. Technol*. **9**, 3–12 (1998).
79. K. L. Yam and R. Saba, "Intelligent Product Delivery: A Paradigm Shift in Packaging," *Pack. Technol. Eng*. **7**, 22–26 (1998).
80. N. Scott and H. Chen, *Nanoscale Science and Engineering for Agricultural and Food Systems*, Cooperative State Research, Education and Extension Service, USDA, 2003.

General References

G. M. Giaglis, I. Minis, A. Tatarakis, and V. Zeimpekis, "Real Time Decision Support Systems in Urban Distribution: Opportunities Afforded by Mobile and Wireless Technologies," 2nd International ECR Research Symposium, Athens, Greece, September 11, 2003.

INTERNATIONAL STANDARDS

RICHARD C. RANDALL
International Business
Standards Association,
Littleton, Colorado

International standards are developed and adopted for use by multiple countries. In contrast, a standard developed specifically for use in only one country is considered a National standard. A National standard is controlled (revised and distributed) by an organization (either government or non-government) within a single nation. An International standard is controlled by an organization (typically non-governmental) with participating members representing multiple nations. International standards are often distributed in multiple languages.

WHAT ARE STANDARDS?

Quite simply, a standard is a technical specification or other document created for the purpose of promoting consistency.

A standard may be "open" (available to the public—for use by anyone) or "closed" (usually a technical specification—for use only by those who have obtained permission from the standard's owner or patent holder). Use of a closed standard may involve payment in the form of a royalty to the patent holder. A standard may be intended to promote free-market competition (e.g., an open standard) or restrict competition (e.g., a closed standard). Similarly, a standard may be designed to (a) promote free trade by removing barriers caused by differences in national practices or (b) restrict trade through creating artificial, protectionist barriers to trade. Standards may also be designed, by either government or non-government entities, to promote specific social agendas. Regulatory requirements often create standards, directly or indirectly.

In short, standards may be designed to promote, or restrict, communication, efficiency, quality, safety, health, environmental protection, free trade, and so on.

Compliance with a "legal" standard (e.g., weights and measures, labeling) is required by law. While compliance with a "voluntary" standard is discretionary, a voluntary standard can be incorporated into a contract or regulation where its provisions become mandatory (1).

THE INTERNATIONAL ORGANIZATION FOR STANDARDIZATION (ISO)

The most widely recognized international standards are developed and published by the International Organization for Standardization (ISO). Established in 1947, the ISO (pronounced "*iso*," as in "isometric") is a network of the national standards institutes representing 157 countries, on the basis of one member per country, formed "to facilitate international coordination and unification of industrial standards." A Central Secretariat in Geneva, Switzerland, coordinates the system.

A *member body* of ISO is the national body "most representative of standardization in its country." Only one such body for each country is accepted for membership in ISO. Member bodies are entitled to participate and exercise full voting rights on any technical committee and policy committee of ISO. A *correspondent member* is usually an organization in a country which does not yet have a fully developed national standards activity. Correspondent members do not take an active part in the technical and policy development work, but are entitled to be kept fully informed about the work of interest to them. *Subscriber membership* has been established for countries with very small economies. Subscriber members pay reduced membership fees that nevertheless allow them to maintain contact with international standardization (2, 3). A complete list of each member body and its country may be found online at http://www.iso.org/iso/en/aboutiso/isomembers/MemberCountryList.MemberCountryList.

The work of preparing ISO standards is normally carried out through technical committees (TCs), their subcommittees (SCs), and their working groups (WGs). Each member body interested in a subject for which a technical committee has been established is entitled to be represented on that committee. International organizations, governmental and non-governmental, in liaison with ISO, also take part in the work. Each TC and SC has a secretariat assigned to a ISO member body. Details of each TC, including its secretariat, organizational structure, and scope of responsibility (determined by the ISO Council), are identified in the annual *ISO Memento* (3).

The ISO technical committees directly concerned with packaging and the distribution of goods are shown in Table 1. It is important to note, however, that the work of other TCs often relates to packaging; for example, TC 6 "Paper, board and pulps," and TC 61, "Plastics,"

Table 1. ISO Technical Committees Concerned with Packaging

	TC 51: Pallets for Unit Load Method of Materials Handling
Scope:	Standardization of pallets in general use in the form of platforms or trays on which goods may be packed to form unit loads for handling by mechanical devices
Secretariat:	British Standards Institution (BSI) 389 Chiswick High Road GB-London W4 4AL Tel: +44 208 996 90 00 Fax: +44 208 996 74 00 Secretariat direct: E-mail: bernard.shelley@bsi-global.com
	TC 52: Light-Gauge Metal Containers
Scope:	Standardization in the field of light-gauge metal containers with a nominal material thickness of $\leq 0.49\,\mathrm{mm}$
Secretariat:	Association française de normalisation (AFNOR) 11, rue Francis de Pressensé FR-93571 Saint-Denis La Plaine Cedex Tel: +33 1 41 62 80 00 Fax: +33 1 49 17 90 00 Secretariat direct: E-mail: annick.galpin@afnor.org
	TC 63: Glass Containers
Scope:	Standardization of glass containers made from molded glass used as a means of packaging.
Secretariat:	British Standards Institution (BSI) 389 Chiswick High Road GB-London W4 4AL Tel: +44 208 996 90 00 Fax: +44 208 996 74 00 Secretariat direct: Tel: +44 208 996 71 72 Fax: +44 208 996 77 99 E-mail: mick.maghar@bsi-global.com
	TC 104: Freight Containers
Scope:	Standardization of freight containers, having an external volume of $\geq 1\,\mathrm{m}^3$ ($\geq 35.3\,\mathrm{ft}^3$), with regard to terminology, classification, dimensions, specifications, test methods, and marking
Secretariat:	American National Standards Institute (ANSI) 1819 L Street, NW US-Washington, DC 20036 Tel: +1 212 642 49 00 Fax: +1 212 398 00 23 Secretariat direct: Tel: +1 212 642 49 75 Fax: +1 212 730 13 46 E-mail: isot@ansi.org
	TC 122: Packaging
Scope:	Standardization in the field of packaging with regard to terminology and definitions, packaging dimensions, performance requirements, and tests; excludes matters falling within the scopes of particular committees (e.g., TC 6, 52, 104)
Secretariat:	Japan Packaging Institute (JISC) 4-1-1 Tsukij JP-Tokyo, Chuo-ku 104-0045 Tel: +81 3 3543 1189 Fax: +81 3 3543 8970 Secretariat direct: Tel: +81 3 3543 1189 Fax: +81 3 3543 8970 E-mail: iso-tc@jpi.or.jp

(*Continued*)

Table 1. Continued

	TC 220: Cryogenic Vessels
Scope:	Standardization in the field of insulated vessels (vacuum or non-vacuum) for the storage and the transport of refrigerated liquefied gases of class 2 of "Recommendations on the Transport of Dangerous Goods—Model Regulations—of the United Nations," in particular concerning the design of the vessels and their safety accessories, gas/materials compatibility, insulation performance, the operational requirements of the equipment and accessories
Secretariat:	Association française de normalisation (AFNOR) 11, rue Francis de Pressensé FR-93571 Saint-Denis La Plaine Cedex Tel: +33 1 41 62 80 00 Fax: +33 1 49 17 90 00 E-mail: uari@afnor.org Web: http://www.afnor.org Secretariat direct: Tel: +33 1 41 62 84 50 E-mail: nicole.legent@afnor.org

both address materials, standards, and associated test methods, but do not specifically address their use in packaging. The scope of TC 34, "Agricultural Food Products," and TC 126, "Tobacco and Tobacco Products," includes packaging, storage, and transport of such products but is, in practice, limited to general, practical advice. When necessary, TCs may create liaisons with other appropriate TCs concerned with packaging.

Because international standardization is a lengthy and expensive process, proposals for new standards must be justified by identifying the need, the aim(s) of the proposed standard, and the interests that may be affected. Once a document is developed, it is listed under the relevant Technical Committee in the annual *ISO Technical Programme* (4) as draft proposals or draft international standards (DISs) in increasing degrees of formality. When a technical committee agrees on a draft standard, it is proposed for approval by all ISO members. If 75% of the votes cast are in favor of the DIS, it is sent for acceptance to the ISO Council. This provides an assurance that no important objections have been overlooked.

There is no requirement for ISO member bodies to publish an ISO standard as a national standard, although it is through such action that ISO standards are put into use throughout the world. On occasion, publication of an ISO standard as a national standard is not considered appropriate.

All ISO standards are listed in the ISO Catalogue (5) and on the *ISO Online* web site (at http://www.iso.ch/welcome.html). ISO standards can frequently be purchased from national standards bodies (ISO member bodies) or directly from ISO on-line at: http://www.iso.org/iso/en/prods-services/ISOstore/store.html.

ISO PACKAGING STANDARDS

Six technical committees have developed ISO standards directly concerned with packaging.

TC 51: Pallets for Unit Load Method of Materials Handling. Tasked with standardizing pallets for general use in the form of platforms or trays on which goods may be packed to form unit loads, TC 51 has currently developed nine standards listed in Table 2.

TC 52: Light-Gauge Metal Containers. Through the work of TC 52, the number of different sizes of open-top, general-purpose food cans has been reduced from over 2000 in 1947 to a total of 35 by the time

Table 2. ISO Standards for General-Purpose Pallets (TC 51)

ISO 445	*Pallets for Materials Handling—Vocabulary*
ISO 6780	*General-Purpose Flat Pallets for Through Transit of Goods—Principal Dimensions and Tolerances*
ISO 8611	*General-Purpose Flat Pallets for Through Transit of Goods—Test Methods*
ISO/TR 10232	*General-Purpose Flat Pallets for Through Transit of Goods—Design Rating and Maximum Working Load*
ISO/TR 10233	*General-Purpose Flat Pallets for Through Transit of Goods—Performance Requirements*
ISO/TR 10234	*General-Purpose Flat Pallets for Through Transit of Goods—Phytosanitary* (plant health) *Requirement for Wooden Pallets*
ISO/TR 11444	*Quality of Sawn Wood Used for the Construction of Pallets*
ISO/TR 12776	*Pallets—Slip Sheets*
ISO 12777-1	*Methods of Test for Pallet Joints—Part 1: Determination of Bending Resistance of Pallet Nails, Other Dowel-Type Fasteners and Staples*

Table 3. ISO Standards for Light-Gauge Metal Containers (TC 52)

ISO 90-1	*Light-Gauge Metal Containers—Definitions and Determination Methods for Dimensions and Capacities—Part 1: Open-Top Cans*
ISO 90-2	*Light-Gauge Metal Containers—Definitions and Determination Methods for Dimensions and Capacities—Part 2: General-Use Containers*
ISO 1361	*Light-Gauge Metal Containers—Open-Top Cans—Round Cans—Internal Diameters*
ISO 3004-1	*Light-Gauge Metal Containers—Capacities and Related Cross Sections—Part 1: Open-Top Cans for General Food*
ISO 3004-2	*Light-Gauge Metal Containers—Capacities and Related Cross Sections—Part 2: Open-Top Cans for Meat and Products Containing Meat for Human Consumption*
ISO 3004-3	*Light-Gauge Metal Containers—Capacities and Related Cross Sections—Part 3: Open-Top Cans for Drinks*
ISO 3004-4	*Light-Gauge Metal Containers—Capacities and Related Cross Sections—Part 4: Open-Top Cans for Edible Oil*
ISO 3004-5	*Light-Gauge Metal Containers—Capacities and Related Cross Sections—Part 5: Open-Top Cans for Fish and Other Fishery Products*
ISO 3004-6	*Light-Gauge Metal Containers—Capacities and Related Cross Sections—Part 6: Open-Top Cans for Milk*
ISO/TR 8610	*Light-Gauge Metal Containers—Round Vent-Hole Cans with Soldered Ends for Milk and Milk Products—Capacities and Related Diameters*
ISO/TR 10193	*Round General-Use Light-Gauge Metal Containers—Nominal Filling Volumes and Nominal Diameters*
ISO/TR 10194	*Nonround General-Use Light-Gauge Metal Containers—Nominal Filling Volumes and Nominal Cross Sections*
ISO 10653	*Light-Gauge Metal Containers—Round Open-Top Cans—Cans Defined by Their Nominal Gross Lidded Capacities*
ISO 10654	*Light-Gauge Metal Containers—Round Open-Top Cans—Cans for Liquid Products with Added Gas, Defined by Their Nominal Filling Volumes*
ISO/TR 11761	*Light-Gauge Metal Containers—Round Open-Top Cans—Classification of Can Sizes by Construction Type*
ISO/TR 11762	*Light-Gauge Metal Containers—Round Open-Top Cans for Liquid Products with Added Gas—Classification of Can Sizes by Construction Type*
ISO/TR 11776	*Light-Gauge Metal Containers—Nonround Open-Top Cans—Cans Defined by Their Nominal Capacities*
ISO 11944	*Round General-Use Light-Gauge Metal Containers—Nominal Diameters for Cylindrical and Tapered Cans up to 10,000-mL Capacity*

ISO 3004-1:1986 was issued. This still may be too many, but it represents the best possible compromise at the present time. The range of standards for light-gauge metal containers, following the current program of work, is listed in Table 3.

TC 63: Glass Containers. Concerned with standardizing glass containers used as a means of packaging (excluding containers made from tubular glass), TC 63 developed 15 standards, listed in Table 4. With no further work item under study or foreseen, TC 63 has since been dissolved.

TC 104: Freight Containers. The standards relating to freight containers (Table 5) are perhaps the best possible example of international standardization, because without them, the "container revolution" could never have taken place. Standardized dimensions, maximum gross masses, and, above all, standardized methods of lifting (twist locks and corner fittings) have enabled rapid, safe transfer of the containers from one transport mode to another. These type standards relate not only to box containers but also to tank containers for liquids, gases, and solids.

TC 122: Packaging. The committee with the broadest scope, TC 122, works to standardize packaging terminology and definitions, as well as packaging dimensions, performance requirements, and tests, but excludes matters falling within the scopes of other committees (e.g., TC 51, TC 52, TC 63, and TC 104). These standards are listed in Table 6.

Table 4. ISO Standards for Glass Containers (TC 63)

ISO 7348	*Glass Containers—Manufacture—Vocabulary*
ISO 7458	*Glass Containers—Internal Pressure Resistance—Test Methods*
ISO 7459	*Glass Containers—Thermal Shock Resistance and Thermal Shock Endurance—Test Methods*
ISO 8106	*Glass Containers—Determination of Capacity by Gravimetric Methods—Test Method*
ISO 8113	*Glass Containers—Resistance to Vertical Load—Test Method*
ISO 8162	*Glass Containers—Tall Crown Finishes—Dimensions*
ISO 8163	*Glass Containers—Shallow Crown Finishes—Dimensions*
ISO 8164	*Glass Containers—520-mL Euro-form Bottles—Dimensions*
ISO 9008	*Glass Containers—Verticality—Test Method*
ISO 9009	*Glass Containers—Height and Nonparallelism of Finish with Reference to Container Base—Test Methods*
ISO 9056	*Glass Containers—Series of Pilferproof Finish—Dimensions*
ISO 9057	*Glass Containers—28-mm Tamper-Evident Finish for Pressurized Liquids—Dimensions*
ISO 9058	*Glass Containers—Tolerances*
ISO 9100	*Wide-Mouth Glass Containers—Vacuum Lug Finishes—Dimensions*
ISO 9885	*Wide-Mouth Glass Containers—Deviation from Flatness of Top Sealing Surface—Test Methods*

Table 5. ISO Standards for Freight Containers (TC 104)

ISO 668	*Series 1 Freight Containers—Classification, Dimensions, and Ratings*
ISO 830	*Freight Containers—Terminology*
ISO 1161	*Series 1 Freight Containers—Corner Fittings—Specification*
ISO 1496-1	*Series 1 Freight Containers—Specification and Testing—Part 1: General Cargo Containers for General Purposes*
ISO 1496-2	*Series 1 Freight Containers—Specification and Testing—Part 2: Thermal Containers*
ISO 1496-3	*Series 1 Freight Containers—Specification and Testing—Part 3: Tank Containers for Liquids, Gases, and Pressurized Dry Bulk*
ISO 1496-4	*Series 1 Freight Containers—Specification and Testing—Part 4: Nonpressurized Containers for Dry Milk*
ISO 1496-5	*Series 1 Freight Containers—Specification and Testing—Part 5: Platform and Platform-Based Containers*
ISO 3874	*Series 1 Freight Containers—Handling and Securing*
ISO 6346	*Freight Containers—Coding, Identification, and Marking*
ISO 8323	*Freight Containers—Air/Surface* (intermodal) *General-Purpose Containers—Specification and Tests*
ISO 9669	*Series 1 Freight Containers—Interface Connections for Tank Containers*
ISO 9711-1	*Freight Containers—Information Related to Containers on Board Vessels—Part 1: Bay Plan System*
ISO 9711-2	*Freight Containers—Information Related to Containers on Board Vessels—Part 2: Telex Data Transmission*
ISO 9897-1	*Freight Containers—Container Equipment Data Exchange (CEDEX)—Part 1: General Communication Codes*
ISO 9897-3	*Freight Containers—Container Equipment Data Exchange (CEDEX)—Part 3: Message Types for Electronic Data Interchange*
ISO 10368	*Freight-Thermal Containers—Remote Condition Monitoring*
ISO 10374	*Freight Containers—Automatic Identification*

TC 220: Cryogenic Vessels. Standardization in the field of insulated vessels (vacuum or non-vacuum) for the storage and the transport of refrigerated liquefied gases of class 2 of "Recommendations on the Transport of Dangerous Goods—Model Regulations—of the United Nations," in particular concerning the design of the vessels and their safety accessories, gas/materials compatibility, insulation performance, and the operational requirements of the equipment and accessories. By the end of 2006, TC 220 had developed 13 standards (listed in Table 7).

ISO 9000: QUALITY SYSTEMS STANDARDS

In 1979, the ISO formed Technical Committee ISO/TC 176 on Quality Management and Quality Assurance to develop a single, generic quality system standard that could be used for external quality-assurance purposes. In 1987,

Table 6. ISO Standards for Packaging in General (TC 122)

ISO 780	*Packaging—Pictorial Marking for Handling of Goods*
ISO 2206	*Packaging—Complete, Filled Transport Packages—Identification of Parts When Testing*
ISO 2233	*Packaging—Complete, Filled Transport Packages—Conditioning for Testing*
ISO 2234	*Packaging—Complete, Filled Transport Packages—Stacking Tests Using Static Load*
ISO 2244	*Packaging—Complete, Filled Transport Packages—Horizontal Impact Tests* (horizontal or inclined plane test; pendulum test)
ISO 2247	*Packaging—Complete, Filled Transport Packages—Vibration Test at Fixed Low Frequency*
ISO 2248	*Packaging—Complete, Filled Transport Packages—Vertical Impact Test by Dropping*
ISO 2873	*Packaging—Complete, Filled Transport Packages—Low-Pressure Test*
ISO 2875	*Packaging—Complete, Filled Transport Packages—Water-Spray Test*
ISO 2876	*Packaging—Complete, Filled Transport Packages—Rolling Test*
ISO 3394	*Dimensions of Rigid Rectangular Packages—Transport Packages*
ISO 3676	*Packaging—Unit-Load Sizes—Dimensions*
ISO 4178	*Complete. Filled Transport Packages—Distribution Trials–Information to Be Recorded*
ISO 4180-1	*Complete. Filled Transport Packages—General Rules for the Compilation of Performance Test Schedules—Part 1: General Principles*
ISO 4180-2	*Complete. Filled Transport Packages—General Rules for the Compilation of Performance Test Schedules—Part 2: Quantitative Data*
ISO/TR 8281-1	*Packaging—Estimating the Filled Volume Using the Flat Dimensions—Part 1: Paper Sacks*
ISO 8317	*Child-Resistant Packaging—Requirements and Testing Procedures for Reclosable Packages*
ISO 8318	*Packaging—Complete, Filled Transport Packages—Vibration Tests Using a Sinusoidal Variable Frequency*
ISO 8474	*Packaging—Complete, Filled Transport Packages—Water Immersion Test*
ISO 8768	*Packaging—Complete, Filled Transport Packages—Toppling Test*
ISO 10531	*Packaging—Complete, Filled Transport Packages—Stability Testing of Unit Loads*
ISO 11683	*Packaging—Tactile Danger Warnings—Requirements*
ISO 12048	*Packaging—Complete, Filled Transport Packages—Compression and Stacking Tests Using a Compression Tester*

Table 7. ISO Standards for Cryogenic Vessels (TC 220)

ISO 20421-1	*Cryogenic Vessels—Large Transportable Vacuum-Insulated Vessels—Part 1: Design, Fabrication, Inspection and Testing*
ISO 20421-2	*Cryogenic Vessels—Large Transportable Vacuum-Insulated Vessels—Part 2: Operational Requirements*
ISO 21009-2	*Cryogenic Vessels—Static Vacuum Insulated Vessels—Part 2: Operational Requirements*
ISO 21010	*Cryogenic Vessels—Gas/Materials Compatibility*
ISO 21012	*Cryogenic Vessels—Hoses*
ISO 21013-3	*Cryogenic Vessels—Pressure-Relief Accessories for Cryogenic Service—Part 3: Sizing and Capacity Determination*
ISO 21014	*Cryogenic Vessels—Cryogenic Insulation Performance*
ISO 21028-1	*Cryogenic Vessels—Toughness Requirements for Materials at Cryogenic Temperature—Part 1: Temperatures below −80 degrees C*
ISO 21028-2	*Cryogenic Vessels—Toughness Requirements for Materials at Cryogenic Temperature—Part 2: Temperatures Between −80 degrees C and −20 degrees C*
ISO 21029-1	*Cryogenic Vessels—Transportable Vacuum Insulated Vessels of not more than 1000 Litres Volume—Part 1: Design, Fabrication, Inspection and Tests*
ISO 21029-2	*Cryogenic Vessels—Transportable Vacuum Insulated Vessels of not more than 1000 Litres Volume—Part 2: Operational Requirements*
ISO 23208	*Cryogenic Vessels—Cleanliness for Cryogenic Service*
ISO 24490	*Cryogenic Vessels—Pumps for Cryogenic Service*

on the basis of the work of TC 176, the ISO published the ISO 9001 Standard. No other standard developed by the ISO has had as much impact on a global scale as this ISO 9001.

ISO 9001 was developed by researching a number of national standards from several ISO member countries including Great Britain's BS 5750 and BS 4891, France's AFNOR Z 50-110, Germany's DIN 55-355, the Netherland's NEN 2646, Canada's Z-299, and the United States' ANSI/ASQC Z-1.15, MIL-Q-9858A, ANSI/ASQC C-1, and ANSI/ASME NQA-1 (6).

Each representative member country participating in the ISO has taken ISO 9001 back to their respective country and, after translation, issued it a designation unique to that country. In the United States, ISO 9001 is published by the American National Standards Institute (ANSI), in conjunction with the American Society for Quality (ASQ), and is referenced as ANSI/ISO/ASQ Q9001.

ISO 9001 is a generic, baseline quality standard written with the intent of being broadly applicable to a wide range of varying nonspecific industries and products. With this objective, ISO 9001 establishes the basic requirements necessary to document and maintain a marginal quality system. These quality system requirements are intended to be complementary to specific product requirements. This broad objective is ISO 9001's strength.

For example, the current version of ISO 9001 (2000 edition) contains broad requirements relating to packaging (in section "7.5.5 Preservation of Product"), stating:

> *The organization shall preserve the conformity of product during internal processing and delivery to the intended destination. This preservation shall include identification, handling, packaging, storage and protection. Preservation shall also apply to the constituent parts of a product.*

Therefore, as appropriate to the product, any of the ISO packaging standards listed in this article may be utilized within an ISO 9001 compliant quality management system.

INTERNATIONAL CODES, RECOMMENDATIONS, REGULATIONS, AND TECHNICAL INSTRUCTIONS

Several other international organizations have developed codes, recommendations, regulations and technical instructions that should also be mentioned here:

1. *UN Recommendations on the Transport of Dangerous Goods, Model Regulations*. Prepared by the United Nations "Committee of Experts on the Transport of Dangerous Goods and on the Globally Harmonized System of Classification and Labelling of Chemicals." These *recommendations* may be viewed (14th edition, 2005) or ordered online at

   http : //www.unece.org/trans/danger/publi/
   unrec/rev14/14files_e.html

2. *The International Maritime Dangerous Goods Code (IMDG)*. Published by the International Maritime Organization. For more information on the IMDG, including how to order the latest edition, visit:

   http : //www.imo.org/Safety/mainframe.asp?
   topic$_i$d = 158

3. *The Dangerous Goods Regulations (DGR)*. Available from International Air Transportation Association (IATA)

   800 Place Victoria
   PO Box 113
   Montreal H4Z 1M1
   Quebec, Canada
   Phone: +1 514 874 0202
   Fax: +1 514 874 9632
   Web Site: http://www.iata.org/

4. *Annex 18 to the Convention on International Civil Aviation—The Safe Transport of Dangerous Goods*

by Air. This may be purchased from ICAO at the following address:

International Civil Aviation Organization
Attention: Document Sales Unit
999 University Street
Montreal, H3C 5H7
Quebec, Canada
E-mail: Sales@icao.int
Web Site: http://www.icao.int/

BIBLIOGRAPHY

1. *What Are Standards*, IBSA (International Business Standards Association) web site, http://www.ibsa.ws/.
2. *ISO web site*, http://www.iso.org/iso/en/aboutiso/introduction/index.html.
3. *ISO Mememto*, International Organization for Standardization, Geneva, Switzerland, annual publication.
4. *ISO Technical Programme*, International Organization for Standardization, Geneva, Switzerland, annual publication.
5. *ISO Catalogue*, International Organization of Standardization, Geneva, Switzerland, annual publication.
6. R. Randall, *Randall's Practical Guide to ISO 9000*, Addison-Wesley, Reading, MA, 1995, p. 7.

IONOMERS

Barry A. Morris*
DuPont Packaging and
Industrial Polymers,
Wilmington, Delaware

Ionomers are premier heat seal polymers that have found use in demanding packaging applications requiring excellent seal reliability, formability, and toughness. The term *ionomers* was coined by the DuPont Company in the early l960 s to describe polymers having both ionic and covalent linkages (1, 2). In particular, ionomers was used to describe the polymers originally sold under the registered trademark of SURLYN®. These polymers are made by high-pressure free-radical polymerization of ethylene with an unsaturated organic carboxylic acid and then partially neutralized with a metal ion (3). The acid groups in these polymers are incorporated randomly along the polymer backbone. While DuPont ionomers are typically made from ethylene–methacrylic acid copolymers, the Dow Chemical Company, and A. Schulman ionomers are made from ethylene–acrylic acid copolymers (4) All four companies supply grades neutralized with either zinc or sodium ions. The ionomers above are composed of ethylene-unsaturated carboxylic acid–carboxylate salt. In addition, DuPont offers some grades that contain a termonomer, isobutyl acrylate. Isobutyl acrylate acts to reduce the polymer's modulus and melting point. It also increases toughness and improves adhesion to certain substrates. Mitsui–DuPont in Japan offers ionomers similar to SURLYN® ionomer resins under the registered trademark of HI-MILAN®.

Recently, DuPont introduced a potassium-based ionomer resin under the tradename ENTIRA™ AS, which is a permanent antistat. It can be blended with polyolefins such as polyethylene or polypropylene to reduce static buildup. Other polymeric materials are also included in the classification of ionomers (5, 6), but the discussion here will be limited to those based on ethylene copolymers that are used as sealants in packaging applications. Structure, physical properties, processing, and selected end uses are covered below.

IONOMER STRUCTURE

The polymer that can be considered the "parent" of these ionomers is low-density polyethylene (LDPE). The structure of LDPE consists of crystalline and amorphous phases, but ionomers contain a third ionic phase composed of metal ions and neutralized carboxylate groups. The structural units of this third phase are called *ionic clusters* and are illustrated in Figure 1. They possess an internal order, the exact nature of which depends on the type of ion present. These clusters are responsible for the unique set of properties of ionomers.

For instance, ethylene-unsaturated acid copolymers exhibit improved toughness compared to LDPE because of hydrogen bonding between carboxylic acid groups on different polymer chains. Ionomers made by neutralizing some of the acid groups in such polymers have not only hydrogen-bonding forces holding polymer chains together but also the much stronger ionic forces from clusters that interconnect polymer chains, as shown in Figure 2. The attractive forces, called *ionic crosslinks*, weaken with increasing temperature, making the polymer more readily processable than an LDPE polymer having comparable melt flow index.

Although the order within the clusters decreases with increasing temperature, the clusters themselves are not destroyed even at temperatures as high as 572°F (300°C). When heated polymer is allowed to cool, reordering of the structure within the clusters and crystallization of short polyethylene segments causes a substantial increase in the modulus of the polymer. The modulus of the cooled polymer and its rate of attaining ultimate modulus depends on the processing temperature, the storage temperature, and relative humidity.

PHYSICAL PROPERTIES

The amount of acid incorporated into the backbones of ionomer chains may range from 7wt% to 30 wt% for commercial products. These acid groups are usually neutralized from about 15% to 80%. Even a relatively low amount of neutralized acid provides significant changes in

---

* This article was updated by Barry A. Morris. The original article was written by George Hoh, DuPont packaging and Industrial polymers, Wilmington, Delaware.

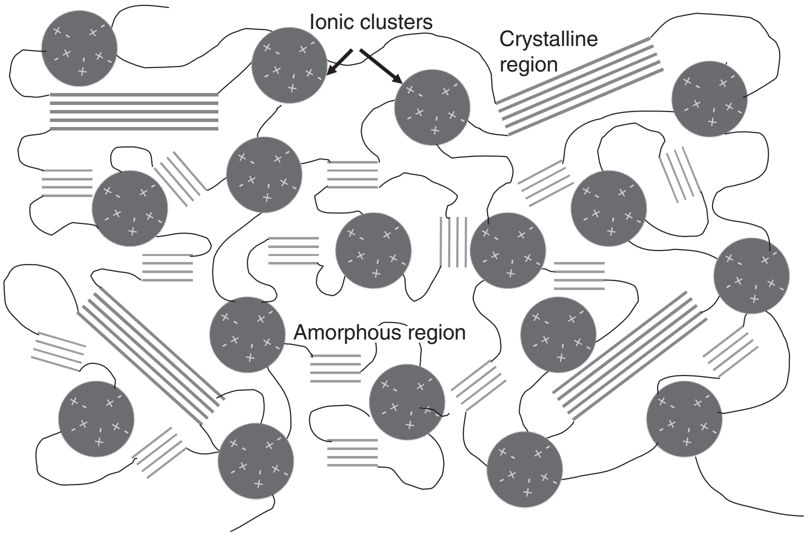

Figure 1. Morphology of ethylene ionomers. Ionomers contain crystalline and amorphous regions similar to LDPE, but also contain "ionic clusters" that impart a unique balance of properties.

physical properties compared to LDPE. Increasing acid content and percentage neutralization causes the following properties to increase: tensile strength, modulus, toughness, clarity, abrasion resistance, puncture resistance, resistance to both mineral and vegetable oils and fats, moisture absorption, and melt strength. Properties that decrease are melting point, haze, surface tack, and notched tear resistance.

Adhesion to polar materials such as aluminum foil, nylon, and paper in coextrusion or extrusion coating is a direct function of the amount of unneutralized acid in the ionomer. Adhesion to nonpolar polyethylene is decreased by increasing amounts of acid and carboxylate salt. Zinc ionomers tend to have a broader range of adhesion than do sodium ionomers and are less hygroscopic. Sodium ionomers offer superior grease resistance and optical properties.

PROCESSING

Unlike LDPE, ionomers are hygroscopic. Manufacturers supply them in a dry state, and they need to be kept dry for proper processing. Ionomers can be processed in typical extrusion and coextrusion equipment that is suitable for extruding LDPE, with the exception that corrosion-resistant equipment needs to be used. For blown-film extrusion, ionomer grades having melt-flow indices ranging from fractional to about 5 dg/min are suitable, although grades having melt flows as high as 14 dg/min can be extruded because ionomers possess exceptional melt strength. The melt strength of ionomers is sometimes used to help carry other layers in coextrusion. For extrusion coating, grades having melt-flow indices ranging upward from about 2.5 dg/min are suitable. Because ionomers have affinity for metal surfaces, grades for extrusion coating benefit from the use of matte chill rolls. Use of a chill-roll release additive also can be helpful, especially if a gloss chill roll is required. Cast-film processing is also suitable for ionomers.

Unlike LDPE, the extrusion temperature should not exceed 590°F (310°C). Good practice calls for maintaining a slow flow of ionomer through the equipment during nonproduction periods. Ionomers need to be purged with a polyolefin resin from the extruder and die prior to an extended shutdown.

APPLICATIONS

Vertical Form/Fill/Seal Packaging

Many of the uses of ionomers in packaging depend on the melt-strength, melt-flow, and adhesion characteristics of this polymer family. As a heat-seal layer especially for vertical form (VFFS) packaging, a property that is extremely important is called "hot tack," which is the capability of a newly formed (still molten) heat-seal bond to resist an opening force. In the case of VFFS packaging, the force is exerted on the end seal by product being dumped into the package. If the hot tack of the seal layer is insufficient, the seal may open partially or completely. Ionomers excel in melt strength, and seal widths of packages can be minimized by their use as the seal layer (see also Form/fill/seal, vertical).

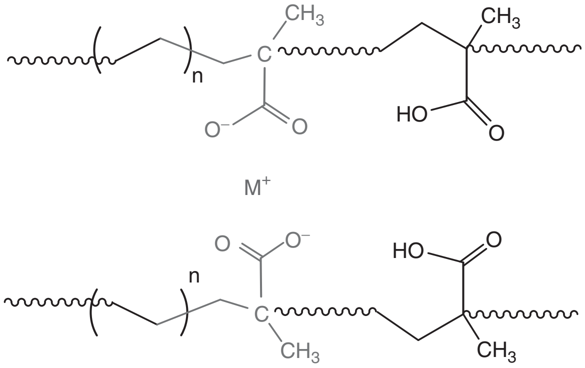

Figure 2. Chemical structure of ethylene ionomers. The interaction between the metal salt (M) and the carboxylic groups on the polymer chain creates "ionic crosslinks."

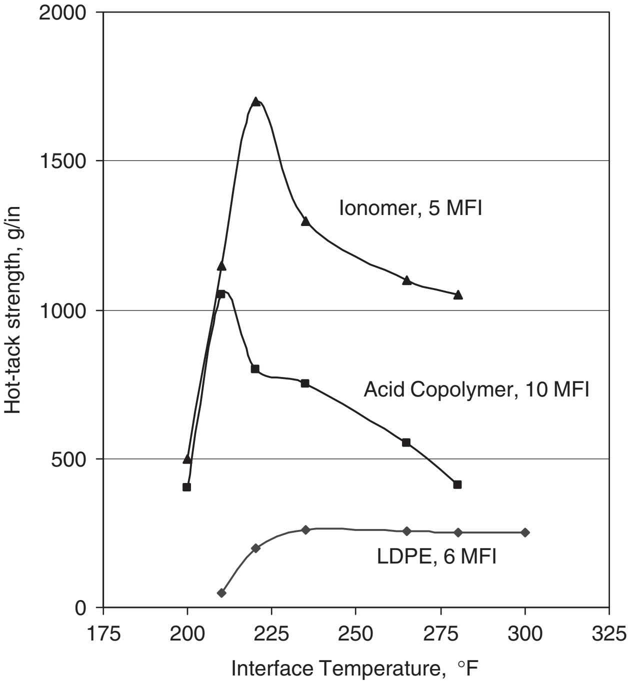

Figure 3. Hot-tack strength comparison, DuPont spring test.

A comparison of the hot tack profiles of a low-performance zinc ionomer, an acid copolymer, and LDPE is shown in Figure 3. For a given hot-tack strength, say, 750 g/in., the operating-temperature window of the ionomer is greater than 75°F, that of the acid copolymer is 40°F, and the LDPE polymer has insufficient hot-tack strength to meet the requirement. The width of the hot-tack window for ionomers contributes to seal reliability and reduced dependence on highly accurate temperature control of the sealing operation.

Ionomers also have low seal initiation temperatures because the crystalline melting point of the parent LDPE has been reduced by copolymerization of acid and/or ester. Since their seal strength is maintained at the high-temperature end of the sealing range, this means that the overall heat-seal operating window is widened and contributes to increased packaging line speeds and seal reliability. The melt-flow characteristics of ionomers also allow them to flow and seal around particulate contaminants that may be in the seal area, also increasing seal reliability. Abrasion resistance of ionomers is a benefit in packaging food products that tend to be abrasive.

Ionomers have greater stiffness than other sealants with similar low-temperature sealability, such as EVA's and polyethylene plastomers. The stiffness of a film affects its ability to be handled in high-speed packaging lines and impacts the package appearance and feel. Because the sealant is one of the outer layers in a multilayer structure, it can have a large impact on the stiffness of the film (7). Sealant stiffness also affects the slow puncture resistance of a packaging film; stiffer ionomer resins impart better puncture resistance than softer plastomers. This is important for many dry food and meat (bone) applications.

Visual Carded Display Packaging

This type of packaging, also called "skin packaging," is used both for retail hanging card displays and for industrial packaging to hold products to a board for shipping. The toughness, optical clarity, and minimal board-curling properties of ionomers make them particularly suited for this use.

Thermoformed Packages

The melt strength of ionomers allows deeper draw depths of packaging webs utilizing an ionomer layer compared to use of other polymers. Coextrusions of ionomers with nylon have been useful in packaging processed meats and cheese. Methacrylic acid-based ionomers also have the property of providing adhesion to the protein of meats and reduce the amount of purge, that is, liquid exudation formed during meat processing. Because of their melt-flow properties, ionomers also have superior properties compared to other polymers for sealing through contamination, as from meat juices. This property gives webs having ionomer seal layers a reduced amount of package leakage, reducing waste and cost.

A specialized type of thermoformed packaging is called "Stretch Pak," in which a film attached to a windowed card is thermoformed, and the product is placed in the cavity. The packaged object is held snugly in the custom-shaped cavity when passing the package through a heated shrink tunnel shrinks the film.

Aluminum-Foil-Based Packaging

Ionomers containing unneutralized acid groups have found wide utility as the seal layer in extrusion-coated aluminum foil structures. The acid groups provide adhesion to the foil, while the superior sealing and chemical-resistance characteristics of the ionomer permit packaging a wide variety of products.

BIBLIOGRAPHY

1. R. W. Rees, *Modern Plastics*, **42**, 209 (1964).
2. R. W. Rees and D. J. Vaughan, *Polymer Preprints*, Vol. 6, American Chemical Society Division of Polymer Chemistry, 1965, p. 287.
3. U.S. Patent 3,264,272, R. W. Rees.
4. G. L. Baker and L. It. Compton, "Introduction of Acrylate Copolymer Based Ionomer Resins for Packaging Applications," *1995 TAPPI Polymers, Laminations & Coatings Conference, Preprints*, 1995, p. 625.
5. R. W. Rees, "Ionomers" in J. Kroschwitz, ed., *Kirk Encyclopedia of Chemical Technology*, 4th edition, Vol. 14, John Wiley & Sons, New York, 1995.
6. R. Longworth, "Ion Containing Polymers: Their Structure and Application," *Plast. Rubber*, **3**, 75 (1978).
7. B. A. Morris and J. Vansant, "The Influence of Sealant Modulus on the Bending Stiffness of Multilayer Films," *SPE ANTEC*, **1**, 35–40 (1998).

JAPANESE PACKAGING

Andrew W. Streeter
CPS International Pack-Track
Cambridge, United Kingdom

INTRODUCTION

No country in the world is as collectively dynamic with consumer packaging than as Japan. It is a country as much in love with (or certainly with a positive liking for), as well as fully appreciating of, its commercial potential. The phenomenon is not new; we have traced it back some few hundred years, but it has certainly for the past 50 years been a key packaging leader in the world.

Japan is also is a very wealthy country, with one of the highest per-capital values (US$37050 GDP per capita; second only to the United States) of the "big" countries in the world. This huge spending power and a discerning market is a breeding ground for packaging innovation and change, and Japan rises and fulfils this challenge well.

This article explores the different facets of Japanese packaging, where culture is as important as commerce and the science of change. Change is in fact frequent in Japan, with packaging not always technically new but certainly visually new and collectively pushing back boundaries of packaging possibilities. It is a fascinating, seductive, and energetic packaging world that is globally trend setting.

THE UNIQUE JAPANESE PACKAGING CULTURE

We have traced the application of packaging back 200 years or more to when bakeries used to wrap their cakes and confectionery in different ways to distinguish them from rival producers. Over time, this became more interesting and entertaining for the consumer, with more elaborate folding of the wrapping and with clever uses of materials. Materials then were primarily paper, and there is a (much longer) parallel here with origami in the creative use of paper materials.

Out of this value-adding use of paper wraps for cakes evolved three principles that have held good in Japan to this day, which you can observe in even the most advanced pack. First, there is the stated need for differentiation while retaining market sector recognition.

Second, it is a statement of care and a statement of pride on behalf the baker. He or she is saying through the packaging, "Here is my product and I thank you for buying it; I present it to you with care, that you may both enjoy it and enjoy the anticipation of it as you unwrap and use the product."

In that last point lies the third quality; over time, it has evolved that to unwrap a pack should be pleasurable, enhancing expectation, and an integral part of the product experience. The pack is part of the product, true now in the developed regions of the world, but Japan was first in this respect, and in Japan it remains more true and more extensive than anywhere else.

We have evolved a phrase from Robert Louise Stevenson that reflects this quality: "to travel is as important as to arrive." When you see, hold, open, use, and finally throw away a pack in Japan, you are on a journey that should be positive and enhance the experience of the product or brand.

The consequences of these factors are that consumer packs are designed in every aspect to a high degree of functionality, which is finessed for consumer handling and commercial considerations of cost. Packs in Japan are well built; easy to open, dispense, and recluse; and today will have a sustainability dimension about them. All that is undertaken in a way that engages the consumer with the brand.

It is not just the history of packaging application that is a driver, however; the Japanese people have high and typically unshakeable standards. It is about quality, quality, and quality; consumer packaging is a beacon of that way of life.

THE IMPORTANCE OF GOOD PACKAGING DESIGN

The role of packaging design is key in securing these multifunctional needs out of the one pack. But design is visualized, and the sector structure is different in Japan when compared with other regions of the world. Every department in the product manufacturing company will work hard to make the pack work at a profitable margin. There is a cultural acceptance to agree on a proposed pack and then deliver it, whereas in the west, by way of example, we argue and debate.

To an outsider, a visit to a Japanese supermarket would reveal a cornucopia of fascinating packaged brands and products, but that romantic pleasure should not disguise a ruthless commercial approach to a product or brand, by this integral association, or its packaging success. If it does not deliver the expected ROS (rate of sale per linear meter on shelf) straight away, it is delisted, and this can be as little as 4 days after launch. So, packaging has to work hard immediately.

A key driver in this need is in the pack design. It can be segmented into graphics, new structures, and new concepts, and each has to add something more to the past packaging design.

Packaged brands are often created for a short market life, sometimes just a few months. A brand can be the same product but in new or evolved graphic interpretations. Change is part of the brand ethic, so there is a constant desire for a new package and something to smile about, which creates an exciting and/or an inventive graphic design community.

A key strategy in this, ironically, is the Japanese language. Its character script has over 10,000 characters, and it is not until about the age of 10 that a young person would have mastered the language sufficiently. Consequently, symbols are frequently used in packaged brand communication and have reached a high level of evolution. Pack designers are extensive users of symbols and other devices. It is often easy for non-Japanese to understand what is inside a Japanese packaged brand because symbolism has a universal quality.

More than graphics, however, Japan has international fame for its new pack structures and concepts where multi disciplined packaging design skills are required. The expression “holistic design” is very appropriate in Japan. Allied to this is a business ethic of introducing new packaging ideas to the market; packaging ideas that can be groundbreaking like the bottle made from paper pulp (image 2). And like the paper pulp bottle, it is accepted that there is a degree of failure, although this failure could be more often one of timing—often ahead of the market-than anything else and certainly not technical failure. Even during the protracted recession of the 1990s, Japan’s packaging industry continued to create and manufacture innovative new packaging.

Japan is often recognized as being an “overpackaged” society, but this not really the case. First, you cannot compare on a like for like basis, as the standard in Japan is so much higher, in terms of quality expectations, than elsewhere. A simple printed can in Japan is more expensive because its cheaper western counterpart is not made to the same standard. The other aspect to the overpackaging perception is also a value one—the need to protect and to ensure that each product is virgin and clean. Couple this with creating pleasure when using the pack and “unwrapping” and the expectation of being functional, and the difference is one of standards, Japan (brings) to the west. Do these higher standards come at an inappropriate premium? We think not and have the opinion that Japan, on a pack comparative basis, pays 1 1/2% to 5% more in packaging unit cost. The value that is delivered is certainly more than the cost, for the Japanese consumer, but maybe in the west we are not there yet.

From that standpoint, Pack concept design in Japan can often deliver a sought-after feature: value adding while not cost adding, and in some instances, cost reduction as well. By way of an example, the small S&B Raa-yu bottle (image 3) has a (a) one-piece closure that is (b) simple to manufacture, (c) provides controlled drops of oil, (d) in an intuitive way to use, (e) engaging to use, (f) low in unit cost, and (g) functions perfectly. Controlling the dispensing of small qualities of oily substances in the kitchen is tricky and has created many complex, costly and at times inadequate packaging devices, yet the closure on the S&B Raa-yu bottle is simple and effective. It is a good example of value up and cost down.

THE PACKAGING INDUSTRY AND PACK DESIGN

The value and culture of new pack design is not lost on the packaging manufacturing industry, where nearly all types of packaging design are controlled by the packaging industry. There are very few independent packaging designers or consultants in Japan. Every medium-sized and upward packaging company would have its own in-house designers, and outside design houses would typically be allied to packaging companies.

The packaging industry, like nearly all industry in Japan, is rather incestuous. Everything is kept within one giant network of suppliers, which is linked by tradition and trusted by time. Added to this, vertical integration is common; for example, the food company Anjinomoto owns a packaging company, a distribution company, and a retailing arm. Control, a fast decision, and flow of goods enhance the whole ethic of quickly introducing new packaging designs and concepts.

With basic issues like graphic design change, a substantial amount of work is created for everyone within the supply chain; turnover grows, employment prospects are made sound, and there is constant market excitement. The mechanisms involved may be open to criticism, but it does work and it does produce some of the most interesting packaging in the world.

The packaging industry leverages design to match the fast changing market needs, and brands often have a projected life of just a few months, so in graphic terms there are constant print changes as designs come out. By tradition, there are beer brands for the different seasons, each one rotating by graphic design every few months, and each season sees a new design.

THE PACKAGING MANUFACTURING INDUSTRY

Japan has a large packaging manufacturing industry that represents a steady 1.3% of GPD (515,733 billion Yen in 2007). The industry has 18 major players, which include foreign subsidiaries like Nihon Tetra Pack. Some of these companies are international, like Mitsubishi, Toppan Printing Company, and Dia Nippon Printing, and in companies where packaging is part of a wide and, in the case of Mitsubishi, diverse range of materials, goods, and services.

In monetary terms, there has been tiny but steady growth in materials leaving the factory gates; glass is in decline and metal is flat, as is to be expected, but this is offset by plastics growth and small improvement in the total value of paperboard.

In tonnage terms, the movement upward has been modest indeed, reflecting a mature society, and all sectors are more or less flat.

Japan is an important and active producer of packaging machinery. The sales value and machine numbers in the table below reflect, like materials, modest overall growth, except that machines to do with flexible packaging have seen a steady growth in line with market trends in this sector.

As costs increase, the industry has been outsourcing and investing within the wider region. Toppan established a base in China in the 1980s, when the situation there was different than today. Packaging machinery components are manufactured in China and finished, and the machine was assembled in Japan. Principle countries in

Company	Packaging sectors	Sales 2007 USD (millions)	Mid-2000's thinking
Mitsubishi Plastics	Plastics	12,259	From rigid to flexible
Kureha Corporation	Plastics	828	Enhancing high barrier
Chuo Kagaku	Plastics	623	Bioplastics and eco-friendly
Toyo Seikan Kaisha	Metal cans, PET, Plastics	5372	Continuing pack sustainability
Hokkai Holdings	Steel cans, PET	16	Can innovation, sustainability
Daiwa Can	Metal, plastics	1538[a]	Global expansion
Fujimori Kogyo	Flexibles	571	Functional films
Cow Pack Co Ltd	Pouch & closer	38	Pouch innovation
Dia Nippon Print	Plastics, board	16,275	Pack and print innovation
Nihon Yamamura	Glass, PET	562	New glass products, hot PET
Ishizuka Glass	Glass	498	Light weighting, value adding
Nihon Tetra Pak	Liquid cartons	572[a]	Recycling, Carbon reduction
Toppan Printing	Board, plastics	13,166	Pack/film innovation
Tokan Kogyo	Cups, containers	454	Part of Toyo Seikan
Oji Paper	Paperboard	10,323	Forest & paper recycling
Nippon Paper	Paperboard	12,798	Global growth & resource recycling
Rengo Company	Corrugated board	3637	Pack improvement, recycling

[a] 2008. PET, polyethylene terephthalate.

Overview of shipment value of packaging materials and containers

	2005 - final -	2006 (including estimate)	2007 (including estimate)
Grand total	59,712 (100.0)	60,496 (100.0)	62,315 (100.0)
	102.9%	101.3%	103.0%
Paper and Paperboard Products	24,744 (41.4)	24,794 (41.0)	25,168 (40.4)
	101.1	100.2	101.5
Plastic Products	16,922 (28.3)	17,713 (29.3)	18,920 (30.4)
	109.8	104.7	106.8
Metal Products	10,721 (18.0)	10,482 (17.3)	10,626 (17.1)
	98.1	97.8	101.4
Glass Products	1463 (2.4)	1396 (2.3)	1377 (2.2)
	97.0	95.5	98.7
Wooden Products	1629 (2.7)	1660 (2.7)	1638 (2.6)
	98.5	101.9	98.7
Miscellaneous (including seals, labels, tapes, textile products, and cellophanes)	4234 (7.1)	4451 (7.4)	4586 (7.4)
	104.5	105.1	103.0

Upper column: Shipment value in 100 million yen(\), Figures in parentheses shows composed ratio (%).
Lower column: Comparison with previous year (%).

Overview of shipment volume of packaging materials and containers

	2005 - final -	2006 (including estimate)	2007 (including estimate)
Grand Total	20,911 (100.0)	20,843 (100.0)	20,837 (100.0)
	99.3%	99.7%	100.0%
Paper and Paperboard Products	12,649 (60.5)	12,695 (61.3)	12,715 (61.0)
	100.0	100.4	100.2
Plastic Products	4005 (19.2)	3998 (19.2)	4023 (19.3)
	100.0	99.8	100.6
Metal Products	1996 (9.5)	1951 (9.4)	1939 (9.3)
	97.9	96.4	99.4
Glass Products	1525 (7.3)	1466 (7.0)	1427 (6.8)
	96.3	96.2	97.3
Wooden Products	736 (3.5)	734 (3.5)	734 (3.5)
	102.5	100.0	100.0

Upper column: Shipment volume in 1000 tons, Figures in parentheses shows composed ratio (%).
Lower column: Comparison with previous year (%).

Overview of production number and value of packaging machinery

	2005 - final -		2006 - final -		2007 (incl. estim.)	
	Number	Value	Number	Value	Number	Value
Grand Total	518,365 (97.2)	4501 (100.0)	492,647 (95.0)	4.665 (103.6)	494,537 (100.4)	4823 (103.4)
1. Packaging and packing machines Total	516,662 (97.2)	4066 (100.8)	490.792 (95.0)	4.191 (103.1)	492,722 (100.4)	4324 (103,2)
Unit and inner packaging machine Sub-Total	385,349 (98.2)	3253 (99.5)	367,501 (95.4)	3,354 (103.1)	367.744 (100.1)	3466 (103.4)
-Scaling machines	4070	205	4078	202	4128	213
-Filling machines	4429	397	4412	428	4544	448
-Bottling machines	2915	456	3222	496	3581	531
-Canning machines	160	29	158	18	163	18
-Pouch form/filling machines	7122	488	6996	512	6759	522
-Container form/filling machines	450	166	433	179	450	175
-Labeling machines	258,644	157	247,862	151	246,034	159
-Cartooning machines	331	64	305	61	335	69
-Overwrapping machines	18,493	236	18,748	233	19,707	250
-Sealing machines	57,087	164	50,821	184	50,711	188
-Shrink packaging machines	2898	112	2867	109	2840	119
-Vacuum packaging machines	6688	103	6734	116	7262	122
-Others	22,062	684	20,865	664	21,230	652
Outer packaging and packing machines Subtotal	131,313 (94.4)	813 (106.0)	123,291 (93.9)	838 (103.0)	124,978 (101.4)	858 (102.4)
-Case landing machines	940	157	941	161	1118	174
-Case gluing machines	147	10	126	7	119	6
-Taping machines	3679	28	3662	26	3728	26
-Strapping machines	103,407	127	95,479	135	96,042	135
-Typing machines	3680	46	3530	52	3652	54
-Boxers	10,257	10	9078	9	9468	10
-Uncasers	17	3	20	4	25	6
-Others	9186	431	10,455	444	10,826	448
2. Bag making machines Total	1265 (100.3)	274 (96.1)	1,308 (103.4)	287 (104.6)	1308 (100.0)	287 (100.0)
3. Paper and paper board converting machines Total	438 (82.3)	161 (89.0)	547 (124.9)	187 (116.2)	504 (92.1)	212 (113.5)

Production value in 100 million yen(\) ( ); Comparison with previous year (%).

outsourcing are South East Asia, South Korea, and China. The Philippines is a major source in Japan of printed flexible packaging for pouches and flow wraps.

The solution to the cost base issue is to continue to value-add packaging, while inventing and exploiting new technologies in the process. Japan's packaging industry innovates with packaging and also commercializes pack concepts from other countries. Toppan's Cart-o-Can originates from Finland; it was developed and commercialized by Lamican oy in Valkeakoski. This is a good example of the Japanese commercial mentality to exploit, improve, and get to market quickly.

The packaging industry leads globally in many consumer pack areas; to highlight this fact, 3 examples are as follows:

- Print quality. The value of good quality print and the exploitation the medium can offer (Image 3) is underappreciated.
- Shaping of paperboard containers. Moving a straight-sided carton into a curvy and feature-rich pack has been a Japanese strength that has given an added dynamic to what was once an unchanging format (image 4).
- Light weighting of PET. This is a popular claim from many countries, and Japan can claim important success here especially with structural design and the use of interlocking panels to create strength (image 5).

Light weighting is a good example of Japan's success with materials application, but part of the pressure to change is to increase savings because of expanding raw material costs. As an example is a brand leader in the bottle water market, "Tennensui" (brand owner & producer Suntory), which was launched in March 2007, introduced a light-weighted 500 mL PET bottle at 25 g with a new (and in some respects novel) shape that was asymmetrical. This design was enhanced by a hewn ice effect, and although it had good visual impact, standout, and brand recognition at the point of sale (PoS), it proved to be structurally weak. This was evident in the all-important vending distribution system, where lateral crushing became very evident. A modification to the bottle structural design was necessary through adding a rib to the base (launched in April 2008) to enhance strength. The net result in weight saved was another 4 g at 21 g for this 500-mL bottle.

Although 21 g is lightweight the current lightest weight 500-mL PET bottle is 18 g for "Pokari Sweat" (brand owner and producer Otsuka Pharmaceutical), which is an 11 g reduction over the previous pack. The values of this bottle through shaping were challenged, and the well-known square cross-sectioned-based bottle was replaced by a conventional cylinder with strengthening ribs added to the perimeter body. Otsuka Pharmaceuticals believes they have reduced PET consumption for this bottle (launched in 2007) by 2700 t per annum.

These weight reductions also demonstrated that the brand values of a pack through shaping and surface treatment are critical, if not paramount. Although serious shape change has taken place to reduce weight, the essence and recognition of the brand has not been lost in these moves. For new brands coming on to the market, we expect more use of surface facets that not only deliver compression and lateral strength in a lightweight container but have the facility deliver light-reflecting highlights to enhance standout at the PoS and add emotional values to a packaged brand.

Changes in other materials have, like PET, been evolutionary more than revolutionary, which is consistent with the packaging industry by and large globally. Important in this evolution has been Toppan, who have continued their vapor disposition process created with GL films (silica oxide) to produce a range of films called GX—hybrid of thin film, disposition, and barrier coatings—with a claimed barrier equivalent to aluminium foil. Toppan have secured over 400 patents in the development of GX films and with a market of some 12,000 t in 2005 and Toppan seeking a 40% share, the prizes are high. This see-through capability when compared with aluminium foil, less heat to incinerate pushing down the dioxin emissions, and other benefits like not infering with metal detection equipment on the production filling line. Toppan's classic Japanese strategy of taking a long-term approach and with GX following on from GL, the disposition and hybrid process approach is set to continue in pursuit of offering a higher barrier on a lower material base.

In the early 1990s, Japan was a leader in two-dimensional (2-D) pouches, and the process is now copied around the world, especially in the United States. Now, Japan has fresh thinking in three-dimensional (3-D) pouches. In image 6, there are two standup pouches with unique bases that give extra stability and enhanced branding opportunities; the pouch to the left has a double skirt, whereas the pouch to the right base is made with a separate film piece. Both approaches provide solutions to the issue of pouch stability and competitiveness in that parameter when compared with rigid containers.

Rigid containers in aluminium and steel have experienced the introduction of shaping especially in three key areas. First, the introduction of surface nonregistered embossing, with aluminium beverage cans, adds enhanced stand-out at PoS and tactile qualities in usage. Second, the introduction of the two-piece bottle can for beverages has been a significant development and is in wide distribution. Paralleling that in steel has been the thee piece bottle can for carbonated beverages, which has a smaller diameter aperture and closure. And in steel, the shaping of three-piece cans with conventional closures, which are used primarily for beverages, especially ready-to-drink (RTD) coffees, and with some skilled surface decoration and embossing to match. (Image 7)

As a vehicle of coordination of developments, training, and activity, the industry in effect sponsors The Japan Packaging Institute (JPI), which is an organization paid for by the industry and not by the members. This economic approach has ensured a lively and active packaging institute in Japan in a decade when many packaging institutes have downsized or even disappeared.

The JPI is the voice of the industry on government bodies; it puts forward plans to meet government regulations, such as on waste, and also promotes its own initiatives, especially this decade, on waste, recycling, and sustainability. In addition, the institute organizes the industry's biannual trade fair, Tokyo Pack and Conference, which can draw in 200,000 visitors over a 5- day period.

JAPAN, PACKAGING, AND SUSTAINABILITY

In some respects, the concept of the three R's (reduce, recycle, and reuse) arrived late in Japan compared with western countries. By the mid-1990s, and again in the mid-2000s, the situation has changed, and Japan leads with a different strategy and plans for packaging waste as part of an overarching national strategy.

Japan's approach to sustainability is embedded in The Containers and Packaging Recycling Act, which was first established in 1995 to meet the increasing need to reduce the volume of solid waste and make full use of recyclable resources by means of sorted collection, and to recycle waste containers and wrapping. The key words at this point in time are *recyclable resources*. A comprehensive reassessment of the Act was started in 2004, with an important contribution from the JPI, and the revised Container and Packaging Recycling Act went into effect just 2 years later in June 2006. The key points of the revised act are as follows:

- Promote the establishment of a sustainable society according to the three Rs of Reduce, Reuse, and Recycle defined in the Basic Act for Establishing a Recycling-Based Society
- Improve cost efficiency throughout society
- Encourage cooperation of all interested parties, including the government, municipalities, business enterprises, and citizens

The key words at this stage are *establishing a Recycling-Based Society*. There are several drivers for this statement, and I want to highlight two. First, Japan is not rich in natural resources (and this, coupled with over 85% of its land being mountainous, plus constant earthquakes, means that there is little to be had from the ground, trees are extensively grown for commercial use). Second, the share of post packaging in the municipal waste stream was high at 60.6% when the original 1995 Act was passed. By comparison, Europe is municipal packaging waste is 5% to 25%.

There has a been a steep change in thinking, and packaging waste is considered to be a resource—a valuable resource—in its own right. The national plan is to harvest that resource.

Operating principles are similar to Europe and North America, where manufacturers and users assume responsibility. The 2004 Act states that there are "specified business entities": These are manufacturers who do the following:

- Use containers and wrapping for shipping their products, including retailers and wholesalers who use containers and wrapping for selling merchandise, manufacturers of containers, importers who import and sell merchandise in containers or wrapping, and importers of containers.
- Have been assigned the responsibility of recycling these containers and wrapping in accordance with the volume that they manufacture or sell.

As in other countries, it is difficult for individual business entities to collect waste containers and wrapping from respective municipalities and recycle them on their own. To provide an alternative, a government designated organization, The Japan Containers and Packaging Recycling Association (JCPRA) was set up to operate the recycling needs of businesses on behalf of the specified business, to meet their statutory obligations. This is paid for by the "business entities" on a fee basis to the JCPRA. The JCPRA has a formidable board structure and is well resourced. The legislation itself can be said to be modeled on the French system of deposit–return and was designed to limit the disruption of these existing systems, including safeguarding the jobs of local government workers employed in waste management.

In addition, the consumer is expected to make a contribution by sorting domestic packaging waste into streams of glass, metal, paperboard, plastics, and PET (as a separate plastics material). This strategy also includes the removal of debris on the container, which, if with water, is a debatable environmental point.

In essence responsibilities can be tabulated as follows:

Consumers	Sort packaging according to municipal criteria
Municipalities	Design and implement a program for source-separated collection of packaging Prepare packaging materials for market
Manufacturers, product manufacturers (includes importers)	Recycling of materials collected by municipalities Meeting the government set targets Develop recycling plants Ultimately recycle all materials from the waste stream

The national plan to implement this strategy is detailed and impressive, and it sets test standards.

How is it working? It is fair to start by saying that the industry fought to limit its responsibility under this system. Yet, nearly two thirds of local governments and municipalities had already implemented systems for separation and collection of recyclable materials from household trash, prior to the law's enactment.

Most municipalities or communities have introduced or expanded curb-side recycling programs to meet these requirements. This is paid for by the Municipal authority. Once they have collected materials, municipalities must prepare them for market. This preparation can include washing collected bottles; removing contaminants, such as caps and labels; and baling. In fact, Japan has some of the most attractive curb-side containers for packaging waste anywhere in the world (even when placed freely on the pavement, it seems always to be neatly bundled and stacked up for collection). Also segmented collection containers are every where, from the small convenience store, to metro stations, to the big supermarkets.

Up-to-date information is not available, but in 2004 the Ministry for the Environment states "that the number of Municipalities conducting sorted collections has increased with regard to every item except for steel and aluminum cans[*] compared with 2002. The volume of waste collected separately and recycled also increased with regard to every item, except for and steel and aluminum cans, of which consumption volume had decreased. This shows that the system under this law is well recognized and has taken root in society.

The volume of used PET bottles collected in 2003 was approximately 110% that of 2002. The recovery rate of used PET bottles, calculated by dividing the volume of sorted collection by the volume of manufacturing, totaled 48.5% in 2003, and this rate steadily increased year by year. Assessing trends[†] regarding the volume of wasted PET bottles, which was derived from the difference between the separately collected volume of used PET bottles

---

[*] The number of municipalities conducting sorted collection and recycling decreased, because the number of municipalities decreased by merger outnumbered the municipalities launched sorted collection and recycling.

[†] The voluntary collection of used PET bottles by businesses is conducted in addition to sorted collection undertaken by municipal governments. The figure here was estimated based on the difference versus the volume of used PET bottles collected by municipalities only. A survey conducted by the Council for PET Bottle Recycling shows that the volume of wasted PET bottles totaled approximately 171,000 t, which decreased by approximately 26,000 t compared with 1997, including approximately 54,000 t (collected rate was 60.9%) of used PET bottles collected by businesses in 2003.

and the manufactured volume, it was found that the recycled volume increased by approximately 6% compared with 2002, whereas the volume of waste decreased by 9000 t compared with 1998 figures.

The used plastic containers and packages other than PET bottles and used paper containers and packages were designated as additional items subject to the law in April 2000. In 2003, 4 years after this designation, the collected volume of used plastic containers and packages and used paper containers and packages increased 140% and 130%, respectively, compared with 2002 figures.

The system is complex, and with the fees, quotas are also imposed on the packaging supply chain at source as part of funding this post consumer collection. The scale of charges is determined by both weight and volume, and this has driven innovation and technical development in response. Reducing package weight has been an example of this. It not only reduces the fees but also cuts other related costs like distribution weight and cube efficiency.

The figures do not tell the whole story. Nearly all Japan's PET is shipped to China and selected South East Asian countries for recycling (undermining some serious new investment in this technology) for cost reasons. Actual recycling rates per household are still below that of the United States. But the system works, has a different objective and ethic than other countries, and is stimulating the packaging industry to create more sustainable packaging and find new ways of meeting product protection needs.

Also, in a move to underline this, in March 2008 the government decided to promote Japan's knowledge and expertise to other countries under the scheme "Sound Material-Cycle Societies".

	2005		2006		2007		2008	
	Sales volume (tons)	Percentage (%)	Sales volume (tons)	Percentage (%)	Sales volume (tons)	Percentage (%)	Sales volume (tons)	Percentage (%)
Glass bottles	**321,990**		**324,967**		**316,288**		**308,853**	
Colorless	96,514	100.0	102,046	100.0	95,172	100.0	93,832	100.0
From bottle to bottle	93,472	96.8	99,488	97.5	91,783	96.4	91,505	97.5
Others	3,042	3.2	2,558	2.5	3,389	3.6	2,327	2.5
Amber	117,455	100.0	115,727	100.0	112,690	100.0	111,561	100.0
From bottle to bottle	102,935	87.6	105,051	90.8	102,148	90.6	102,826	92.2
Others	14,520	12.4	10,676	9.2	10,542	9.4	8,734	7.8
Other Colors	108,020	100.0	107,194	100.0	108,426	100.0	103,460	100.0
From bottle to bottle	19,880	18.4	22,967	21.4	17,209	15.9	26,707	25.8
Others	88,140	81.6	84,227	78.6	91,217	84.1	76,753	74.2
PET bottles	**143,032**	**100.0**	**106,445**	**100.0**	**111,847**	**100.0**	**121,500**	**100.0**
Textiles	64,103	44.8	55,458	52.1	61,292	54.8	67,685	55.7
Plastic sheet	58,788	41.1	41,088	38.6	43,285	38.7	46,808	38.5
Bottles	12,134	8.5	6,493	6.1	3,915	3.5	3,278	2.7
Molded products	6,217	4.3	3,087	2.9	2,796	2.5	2,965	2.4
Others	1,790	1.3	319	0.3	559	0.5	761	0.6
Paper	**26,471**	**100.0**	**28,093**	**100.0**	**27,083**	**100.0**	**26,660**	**100.0**
Materials	24,894	94.0	26,689	95.0	25,813	95.3	25,125	94.2
Materials for other than paper	223	0.9	47	0.2	197	0.7	262	1.0
Refuse Derived Fuel	1,354	5.1	1,357	4.8	1,073	4.0	1,274	4.8
Plastics	**365,924**	**100.0**	**380,434**	**100.0**	**381,163**	**100.0**	**374,590**	**100.0**
Plastics	364,991	99.7	379,589	99.7	380,353	99.8	373,812	99.8
Molding materials	88,852	24.2	131,256	34.5	149,678	39.3	171,475	45.8
Pyrolytic oil	6,993	1.9	4,389	1.2	4,258	1.1	2,730	0.7
Reducing agent in blast furnaces	36,444	10.0	37,282	9.8	31,259	8.2	15,605	4.2
Chemical raw materials for the coke oven	174,061	47.6	152,103	40.0	138,626	36.4	137,320	36.7
Synthetic gas	58,641	16.0	54,559	14.3	56,531	14.9	46,682	12.5
Tray	933	0.3	845	0.2	810	0.2	778	0.2
Molding materials	933	0.3	845	0.2	810	0.2	778	0.2

OTHER DRIVERS OF PACKAGING CHANGE

Japan's economic success has come with a premium; the birth rate has steadily fallen, and the population is living longer. It is now predicted that by 2025 over one third of the population will be 65 or older. Coupled to this the life expectancy prediction (Government 2006) is 79.0 years for a man, second only to Greenland, and 85.8 years for a woman, which is the highest life expectancy in the world.

This society will have packaging issues for a large section of the population. Part of the solution is in the underlining need to value add and to provide packs that match an aging lifestyle. An aging population is likely to consume more pharmacy products, and there are packaging opportunities there.

Another part of the solution is in the concept of universal design (UD). The theory of universal design is advocated by the U.S.-based researcher Ronald L. Mace. refers to the design of products, elements, or spaces that can be used with equal effectiveness by anyone, from the elderly or physically challenged, to children or pregnant women, irrespective of the user's abilities or degree of dexterity.

The packaging industry and their designers are responding. Product manufacturer Kokko has an oblate-shaped cup that is designed to make it easy for the elderly to take medication. At the everyday product level, plastics company Osaka Hososha, in conjunction with flexible manufacturer Gunze, has developed a new sandwich pack made from an easy opening heat seal of OPP film produced by Gunze. This pack features two tabs on either side of the pack, either of which is simply pulled in an upward direction to open. The film separates smoothly from the seal portion, leaving the label intact and enabling the contents to be removed with ease without out the fingers coming in contact with the filling.

There is a strong enough eco-ethic in Japan to have a packaging effect. The application of cellulose-based fiber has been enjoying a renaissance. Pressure-formed paper-pulp compartmentalized trays as replacements for plastics are now well established. They are well decorated and can have an elaborate shaping. When Lion launched a powdered detergent in a paper pulp bottle (image 2) not only was that a remarkable feat but also they were confident enough to supply a refill pouch as well.

Making use of waste packaging, Daiko Sangyo has made a gift-wrapping cloth out of recycled PET bottles.

A company called Yutaka has developed tubs that are edible. They are made from potato or sweet potato starch. The tub can be an alternative for a small packs made from paper or plastics. It can only be used where a barrier is not required and the shelf life is short. Conventionally, this type of edible wafer film becomes fragile when it dries, which makes it difficult to form, but the Yutaka process uses a controlled thickness of starch film and then forms it at narrow temperature bands. The material is claimed to be resistant to oil and moisture. Its potential is seen for small baked goods like muffins and deli foods and for boxed meals. The product is claimed to be sustainable as it is a foodstuff in its own right from renewable plants and does not need to be separated and disposed of.

Behind these developments, the environmental driver is creating new improvements. Packaging company Nagata has a liquid container that can be folded for easy transportation and storage. The Giant paperboard company Oji has developed a board product that uses the leaves from green tea within its structure.

WHAT THE FUTURE MAY HOLD IN JAPAN FOR ITS PACKAGING

Like many other countries and societies, Japan is at something of a crossroads with its packaging. It has a high cost base, a complex but effective recycle packaging resource strategy, a rapidly aging consumer market, and a relatively large packaging sector, all in the context of potentially severe global economic downturn starting in 2008–2009.

A prime key is in value adding with packaging, but in a way that meets the demands of a changing and environmentally aware society with the backing of government sustainability legislation.

We see new packs emerging from fiber. Japan is fortunate in that has a large forestry industry and an inclination to be technologically innovative with cellulose fiber. We predict that Japan will be a global leader in the conversion of cellulose into new pack formats, and that it will continue to perfect machines and paperboard materials that can be shaped and made easy to open, easy to dispense, and easy to reclose. Paperboard materials engineering struggles with incorporating a barrier while retaining some element of biodegradability or avoiding complex, multilayered materials with this material.

Strength is in the packaging design base of paperboard products and with the facility to create value-adding packs without always increasing cost.

On the horizon is the development of high-function resins—aliphatic polycarbonate—from carbon dioxide. This work has been started with the objective to launch the resins onto the market by 2012. The development is a collaboration between the industry and the universities.

When fully commercialized, it is judged to have the potential to replace polyethylene (PE) and polypropylene (PP) materials, which in turn account for 60% of the worlds resin usage. If realized this would have the effect of reducing CO_2 emissions by 30% when compared with resins manufactured from oil.

The Japanese approach to packaging, society, and commerce is different to that of most countries in the world. It is flexible; it embraces and drives change, and accepts constant change as a way of life. It has a culture that can implement change faster than most.

Compared with other countries' packaging sectors, in changing and challenging economic and global warming times, that skill base, with change, has the potential to retain its leading edge with packaging.

L

LABELS AND LABELING MACHINERY

Steve Werblow
Micha Noah

Labels can be affixed to almost anything to indicate its contents, nature, ownership, or destination. Labeling is the art of applying or attaching the label to a particular surface, item, or product (see also Tags).

Originally, labels were used merely to identify a product or to supply information about the properties, nature, or purpose of the items labeled. Today their use is often required by legislation (1), and they are seen as sales and marketing aids in the total design of a package or product. In some cases, the labels have become products in themselves.

TYPES OF LABELS AND MATERIALS

The range and variety of labels used, and the markets and applications for them, are increasingly diverse. Materials include paperboard, laminates, metallic foils, paper, plastics, fabric, and synthetic substrates. These, in turn, may be adhesive or nonadhesive. Even then, the range of label materials can be further subdivided into a variety of different types: coated or uncoated; pressure-sensitive or heat-sensitive; conventional gummed or particle gummed (2). Figure 1 shows the main types of labels and materials.

Of all the different types of labels, nonadhesive plain paper labels applied by wet gluing tend to dominate the total user market throughout the world. In recent years, however, there has been a marked trend toward self-adhesive pressure-sensitive labels. Newer methods of labeling such as shrink sleeve, in-mold, and heat transfer have also gained market acceptance (see Bands, shrink; Decorating).

Overall, the U.S. pressure-sensitive (self-adhesive) roll label market is growing at about 10–15% per year, with some printers and market sectors showing growth of 20% or more. The two main markets showing above average growth are electronic data processing (EDP) labels and prime labels.

Plain-Paper Labels

The conventional wet-glue plain-paper label is widely used, particularly for large-volume items such as beer, soft drinks, wines, and canned foods, where high label application speeds, sometimes in excess of 80–100,000 labels per hour, are required.

Most of the papers used in this type of labeling are one-sided coated grades, which make up the familiar can and bottle labels, but a fair volume of uncoated grades is still used. These tend to be limited to special effects, such as colored papers, embossed papers, or antique laids for wine labels, where particular characteristics are required (3).

Gummed-Paper Labels

Gummed-paper labels have been declining in usage in recent years and are now limited mainly to applications such as address labeling for cartons, point-of-sale displays, and any labeling applications where automation is either difficult or unnecessary. Two main types of gummed labels are in use: conventional gummed and particle gummed (4).

Conventional gummed labels are those that are made up of a base support of paper coated on the reverse side with a film of water-moistenable gum. On particle gummed papers, the adhesive is applied in the form of minute granules. This avoids problems of curling often associated with conventional gummed papers. Most of the

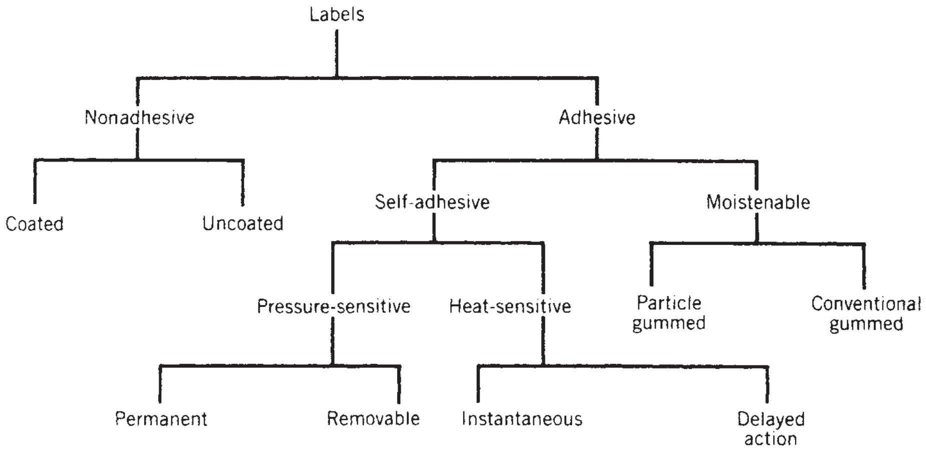

Figure 1. The main types of labels and materials.

newer applications for gummed papers require the properties of high-tack particle gummed papers, which offer many advantages in terms of processing efficiency and security of application.

Self-Adhesive Labels

Self-adhesive label materials (see Figure 2) today range from permanent to removable adhesive types, as well as a whole range of special adhesive materials (see Adhesives).

Permanent adhesives are those that are required to stay in position for a long time or for application to surfaces that are round, irregular, or flexible. Because of the strong adhesive "grab," the label normally becomes damaged or defaced if attempts are made to remove it.

Removable adhesives are those that can be removed after a specified time without damage to the surface on which they have been applied. Uses include short-term food-packaging applications, point-of-sale or advertising stickers, china, and ovenware, where the label should be easy to remove before use.

Within the broad categories of permanent and removable self-adhesive labels, there is a wide variety of special adhesive types to cover requirements such as water removability, low- or high-temperature adhesion, ultraviolet-light resistance, and high- and low-tack properties. Adhesives, which at one time were largely solvent-based, have moved rapidly in recent years to hot-melt or water-based acrylic adhesives (5) (see Acrylics).

For all normal self-adhesive labeling requirements (food and supermarket labels, retail/price marking labels, etc.), surface papers in a variety of weights and finishes, colors, and radiants are available. For special applications, such as outdoor labels, instruction and nameplates for appliances, underwater labels, ampules and vials, and luxury-labeling of cosmetics and toiletries, there is a wide range of nonpaper materials. These include metallic foils and plastic films.

One of the most recent developments in self-adhesive materials is a range of thermal imaging label facestocks, which have become popular for in-store supermarket labeling of meat and fish and fresh produce (fruit and vegetables). These materials contain a surface coating of chemicals that darken under the action of a heated printhead (see Figure 3) (6), thereby providing clear price and weight information and accurate scannable bar codes (7) (see Codebar; Code marking and imprinting).

Almost all self-adhesive label materials are available in sheet form, from paper merchants and suppliers, or, for reel-fed conversion, from manufacturers and specialist suppliers in roll form.

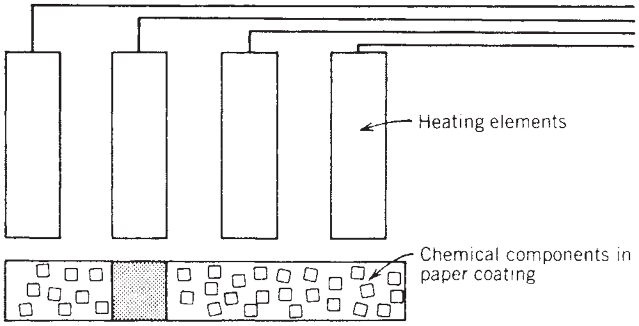

Figure 3. The chemical components in the thermal label paper coating combine and darken when activated by heat.

The main markets for self-adhesive labels in the United States are basically segmented into three areas: industrial labels (or primary and secondary labels used in retail, wholesale, and industrial packaged goods), which make up about 80% of the U.S. self-adhesive label market; EDP labels (those used for marking/imprinting variable information); and price-marking and imprinting (which addresses label applications through handheld dispensers and the whole range of imprint technology). Split into some of the main market application areas, this includes promotional labels, price labels, functional labels, office/retail labels, nameplates, stickers, EDP labels, and prime labels.

Heat-Sensitive Labels

There are two basic types of heat-sensitive or heat-seal labels: instantaneous and delayed-action. In the former, heat and pressure are applied to the label to fix it directly on to the product, whereas with delayed action, applied heat turns the product into a pressure-sensitive item. No direct heat is applied to the goods; and this clearly is vital to some products, such as food.

Typical market applications for delayed-action heat-sensitive label papers include pharmaceutical, price/weigh, some glass-bottle, and rigid or semirigid plastic container labeling. Instantaneous materials are used for applications such as (a) end seals on biscuit or toilet tissue packs and (b) labels on "pleat wrapped" articles (e.g., disinfectant pads, pies, cakes), as well as for some banding applications (8).

In-Mold Labels

In-mold labels are printed on paper or synthetic papers made of polyethylene (PE) or biaxially oriented plolypropylene (BoPP). They are introduced into the container-producing mold before the molten resin is added. The heat

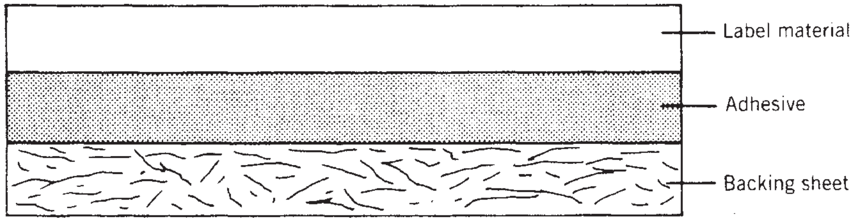

Figure 2. Self-adhesive labels consist of three main layers: the label-face material itself, the pressure-sensitive adhesive coating, and a release coating on a backing material to prevent the adhesive from sticking to the face material in the reel or sheets.

of the resin fuses the heat seal layer of the label to the container, combining label and container to create a sleek, seamless no-label look, as if the graphics were screened directly on the container.

Because they can be produced on high-quality rotogravure or rotary offset presses, in-mold labels can deliver beautifully sharp and nuanced graphics, far surpassing the quality of direct-screened or dry-offset printing.

In-mold labels are typically used where a no-label look is desired, for flexible containers, or for applications in which pressure-sensitive, glue-applied, or heat-seal labels could be challenged by scuffing, freezing conditions, grease, or solvents such as cleansers.

Shrink Sleeves

Shrink sleeves offer full 360-degree graphic space and conform to the shape of nearly any rigid container when heated. Because of their ability to conform to most contours, shrink sleeves have gained tremendous popularity on curved bottles and jars, as well as squeezable containers, all of which have traditionally been very difficult to decorate with conventional labels.

Shrink sleeves are printed, then rolled and sealed into a tube shape. On the packaging line, the tube is placed over the container and sealed in a heat tunnel, where controlled blasts of hot air or steam shrink the film onto the container.

Designing graphics for shrink sleeve labels requires software that compensates for the shape of the container. Graphics look distorted as the sleeve material comes off the press; when shrunk onto the container, it appears as the designer planned.

Managing shrinkage is therefore of the utmost importance in designing and applying a shrink sleeve. The process starts with material selection. High-quality film is critical to obtaining good results, as is selecting film of a material and gauge (thickness) that offers the appropriate amount of shrinkage.

Poly(vinyl chloride) (PVC) tends to yield the most easily controlled shrinkage, the lowest shrink temperature, and the most cost-effective alternative.

Poly(ethylene terephthalate) gly (PETG) is significantly more expensive, but can shrink far more, which makes it appropriate for dramatic contours such as very narrow-waisted or long-necked bottles. Where recycling is important, PETG may be the favored choice, because PVC on a PET container can be difficult to separate from PET during the container recycling process.

Oriented polystyrene (OPS) is less expensive than PETG, but its instability can make it difficult to handle, print, and seal. However, it may be desired for its flexibility and low vertical shrink, which makes it well-suited for squeezable containers.

Poly(lactic acid) (PLA) offers a compostable alternative, but many converters have been wary during PLA shrink sleeves' introductory years because shrink characteristics have not been as well understood as with more familiar films.

Shrink Sleeve Application

Shrink sleeves are applied by setting the tube-shaped sleeve around the container and conveying the sleeve and container through a heat tunnel, where they are exposed to hot air or steam. The heat in the tunnel must be set to a temperature at which the shrink sleeve film shrinks at a controlled rate in order to ensure that the sleeve covers the container evenly and conforms to each contour. Shrink sleeve applicators and heat tunnels often have to be fine-tuned—by adjusting temperature as well as directing the nozzles or heating elements inside the tunnel—to ensure that proper application and shrinkage are occurring.

In most cases, the contours of the container and the tight fit of the film are enough to ensure that a shrink sleeve will remain in place throughout the package's useful life. However, for packages whose shape could allow the sleeve to slip off—for instance, a yogurt cup or a simple jar—a few dots of heat-activated adhesive applied on the inside of the sleeve during the printing process can keep the sleeve in place.

In-Mold Label Application

In-mold labels are applied during the creation of the package itself, fusing the label to the container. In the United States, blow molding is the most popular production process, while injection molding is the dominant technology in Europe.

During the container manufacturing process, a label is held in place in the mold by vacuum or electrostatic forces. Hot resin is injected or blown into the mold, forming the container while fusing the label into its wall. In blow-molding applications, the label contains a heat-activated adhesive. In the injection-molding process, no adhesive is necessary. In both cases, the label is integrated into the wall of the container.

The high cost of molds has been a barrier to the wider adoption of in-mold labeling. However, many companies appreciate the opportunity to decorate packages during the manufacturing process, eliminating the time, labor, and equipment needed for a separate labeling step. The look and performance of in-mold labels also has tremendous appeal.

LABEL PRINTING

The main printing processes in use for label production are flexography, letterpress, gravure, lithography, silkscreen, and, to a lesser extent, hot-foil stamping. This applies for most types of labels whether printed flat or from a reel (see Decorating; Printing).

Although the principles of each process remain the same for reel- or sheet-fed printing, the selection of the particular process and the cost factors in that decision are different for each particular section of the label industry. For example, printing of sheet labels is done primarily by lithography or gravure; but letterpress and flexography are major processes for the production of reel-fed self-adhesive labels.

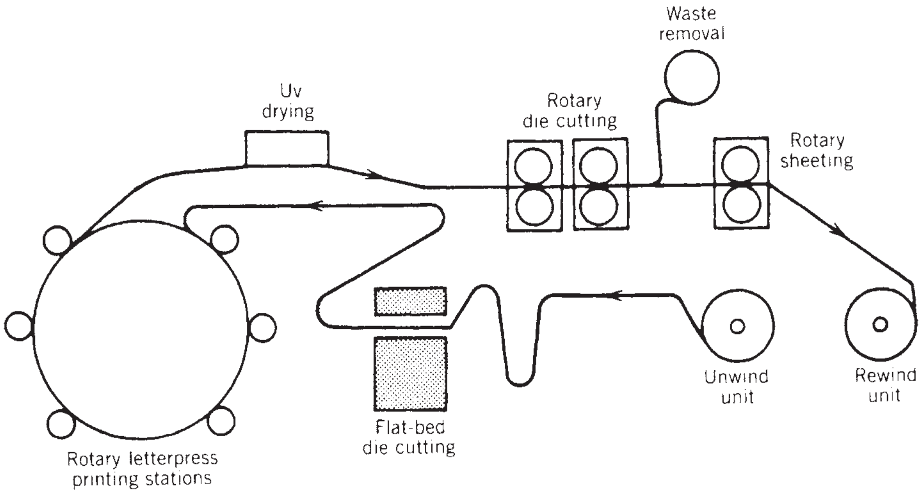

Figure 4. Rotary letterpress roll label press.

The fastest-growing technique of label printing is the narrow-web roll label conversion of self-adhesive materials using presses that may be printing and converting webs as narrow as 2 in. (50 mm), ranging up to 250, 300, or 400 mm wide (9). These presses not only print substrates up to 6, 8, 10, or more colors in one press pass but also undertake flat-bed or rotary die cutting of the labels and possibly UV varnishing, over-laminating with clear synthetic films, removing matrix waste, slitting, fan-folding, sprocket-hole punching, and so on, and, finally, rewinding of the printed reel of labels ready for automatic application (10). A schematic diagram of a typical roll label printing and converting press is shown in Figure 4.

PRINTING METHODS

Flexography

The main advantage of flexography, the most widely used process for reel-fed label printing, is its output speed, which is due to full rotary printing and machine die cutting. In addition, spirit-based inks evaporate quickly, allowing printing on a wide variety of substrates other than paper (see Inks).

Owing to speed of output, flexo labels generally cost less than labels printed by the other major processes. Because presses can be purchased at a relatively low capital cost, many of the smaller label printers use the process. The presses do, however, vary enormously in complexity. Equally important, the quality of the labels produced depends greatly on the skill of the operator.

Letterpress

Although letterpress has declined in usage in the general printing industry, it is a major process in the label industry and gaining in popularity. It is the second most popular process in the roll label industry after flexography, and in some countries it is almost the only process used.

The process has adapted well to the needs of the label industry, giving good-quality reproduction and relatively low-cost origination. Presses are available in flat (platen) form, semirotary, or full-rotary letterpress (9).

The main advantage of letterpress is superior quality and ability to hold accurate print definition throughout the run. Solid- and fine-line printing are no problem, because the inks are fully pigmented with excellent lightfastness and color matching. Printing plates can be metal or photopolymer.

The development of UV-cured inks has meant that previously difficult or even impossible to print substances such as vinyls and polyesters can now be "cured" using polymer inks and UV lamps.

Gravure

The gravure process gives excellent quality and print definition. With a very fast throughput it is best suited to long runs where the high cost of originating printing cylinders can be recovered.

Silkscreen

The unique method of applying ink through a screen gives screen process an ink coverage that cannot be completely matched by any other printing method (9). It will also print on virtually any substrate.

The presses are made as complete screen printing units, or a series of screen printing heads can be added to suitable letterpress machines, giving a combination of benefits.

Hot-Foil Stamping

Hot-foil stamping is generally done in one of two ways: by complete hot-foil presses in their own right and by hot-foil units set in-line onto an existing label press. The process gives striking effects when combined with other processes and is very much a designer's medium (9).

LABELING

Once a label has been produced, it must be applied in the correct position to a particular surface or product. The label must be applied securely enough for it to remain fixed in that position throughout the useful life of the product or container. It must stand up to whatever conditions it is likely to be exposed to and should also maintain a good appearance. In the case of returnable bottles, however, the label must be able to be removed easily during the washing operation.

The labeling operation must also be able to meet production requirements. On packaging lines, the labeling machine must be able to keep pace with the line, often at high speeds, having minimum stoppages and downtime (11).

Some labels are applied to products or containers with a simple handheld gun or dispenser; others are applied by a semiautomatic or fully automatic labeling machine suited to the particular type of label: wet-glue, pressure-sensitive, or heat-seal (heat-sensitive).

Wet-Glue Labeling Machinery

Wet-glue labeling is the least expensive labeling system in terms of label costs. There are many machines on the market from the simple semiautomatic to the high-speed advanced models for speeds of up to 600 containers per minute. Straight line or rotary, vacuum transfer of the label or transfer by picker plate, and allover gumming or strip gumming all have a place and are used in many industries, particularly in food, wine, and spirits plants.

New types of adhesives make glue labeling important for plastic containers as well as glass. Hot-melt adhesive can be used. Large labels are probably cheaper to apply with wet glue than with a heat-seal or pressure-sensitive system, and wet-glue labels are probably superior for applying multiple labels to a range of containers, such as liquor bottles.

Labels may be applied by hand or by semiautomatic or automatic machines (see Figure 5). There are many different types of wet-glue labeling machines, but they all have to perform the following functions:

1. Feed labels one at a time from a magazine.
2. Coat the labels with adhesive.
3. Feed the glued labels on to the articles to be labeled in the correct position.
4. Ensure that the articles are held in the correct position to be labeled.
5. Apply pressure to smooth the label on to the article and press it into good contact.
6. Remove the article when it has been labeled.

If any of these operations are not performed at the right times, with everything positioned accurately, the results will be unlabeled articles, badly positioned, skewed, or torn labels, and machine stoppages. Machines vary mainly in the way they perform the various functions. For example, some machines may use suction to remove labels from the magazine, and others use the tack of the adhesive itself (11).

The adhesives used for wet labeling fall into five main classes: dextrin-based, casein-based, starch-based, synthetic-resin dispersions, and hot melts.

Apart from the hot melts, all these adhesives are waterborne. The speed at which they set depends, therefore, on the rate at which the water phase can be removed by the absorbency of the label stock. If the water cannot get away, they will not set.

Synthetic resin dispersions, of which the most widely used are those based on poly(vinyl acetate) (PVA), have the major advantage of faster setting, owing to the ability of the polymer particles to draw together to form a continuous film for the loss of much less water than is the case with those adhesives based on natural materials. They are used particularly in the labeling of plastic bottles or coated glass, where normal dextrin, casein, and starch adhesives have difficulty in producing a permanent bond. They are limited to nonreturnable bottles, however, as the dried film has considerable resistance to water and cleaning fluids. One advantage is a low initial tack, which restricts their application to certain types of machines with sufficient brushing-on capacity.

Hot melts are 100% solids, melting when heated and setting almost instantaneously on cooling. They have high initial tack, thus labels adhere to surfaces such as PVC and polyethylene (PE) at high speeds, but are not suitable for wet bottles. To select the correct adhesive for a particular application, every factor of the operation must be taken into account: the operating conditions, type, and condition of the articles to be labeled, nature of the label papers, transport and storage conditions, and any particular usage requirements (12).

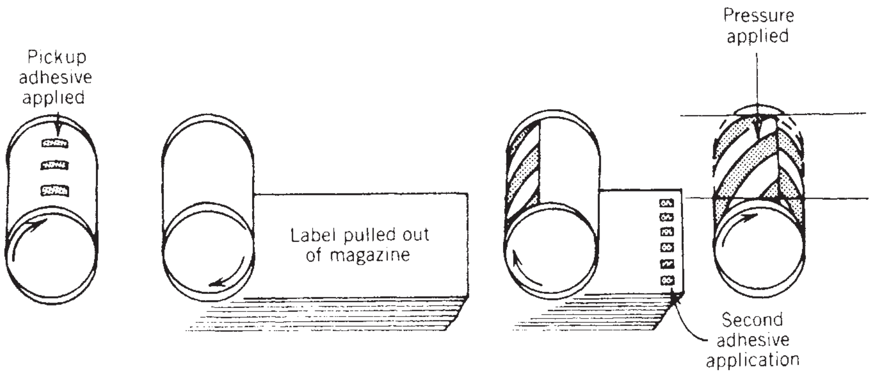

Figure 5. Stages in the labeling of cans. Adhesive is first applied to the container. As the container rotates over the label magazine it picks up its own label, which is then rolled around it. A second adhesive application to the trailing edge of the labels, followed by pressure, completes the labeling operation.

Pressure-Sensitive Labeling Machines

A pressure-sensitive adhesive is one that remains permanently and aggressively tacky in the dry form and has the ability to bond instantaneously to a wide variety of materials solely by the application of light pressure. No water, solvent, or heat is needed to activate these materials.

Because the adhesive is permanently tacky, it would stick to anything it contacted, so a backing sheet is required to protect the adhesive layer until it contacts the article to be labeled. The backing sheet is coated with a release coating to prevent the label from sticking too firmly to it (13).

There are many different types of applicators, but they all have one thing in common: a means of peeling the labels away from the backing (see Figure 6). This is usually accomplished by unwinding a reel of die-cut labels and then pulling them under tension around a stripper plate. As the backing is bent around a sharp angle, the front edge of the label peels away. Once the labels have been detached from the backing, there are various ways of feeding them forward and pressing them onto the containers in the correct position. Containers may be fed forward to an applicator drum where the label is transferred to it under light pressure created by an applicator drum and pressure pad. Alternatively, the label may be held in position on a vacuum box or drum and released onto the article when it is in the correct position, or it may be blown onto the container by releasing the vacuum and applying air pressure. The backing paper is then rewound on a take-up spool (12).

Comparatively simple systems have been devised to apply the label to the product. The choice ranges from a dispenser that releases a label for hand application up to high-speed automatic labelers. Labeling machines for applying pressure-sensitive labels vary in complexity according to the nature of the package to be labeled, the number of labels to be applied at one time, and the speed of application. There are, of course, semiautomatic labelers for single-product medium-volume application. Although pressure-sensitive labelers are available as standard machines, they are usually readily customized to meet special requirements. Generally, they are only about one-third to one-half the cost of most competitive labeling systems.

The advantages of pressure-sensitive labels are said to be numerous. They are cleaner than other methods, less wasteful than wet glue, and more easily controlled because they come in roll form so that labels cannot be mixed up. A wide variety of adhesives for different surfaces is available, and clear acetate, vinyl, or polyester film can be used for “see-through” labels.

Heat-Seal Labeling Machines

Heat-seal labeling has most of the advantages of pressure-sensitive labels but generally offers a lower label cost. Heat-seal describes a plasticized paper which, when heated by the machine, becomes sticky on its underside. Labeling equipment for heat-seal ranges from simple aids to automatic high-speed machines, giving the unique advantage of being able to apply to many varied types of surface labels that can be precision-placed, give allover adhesion, and be perfectly clean when applied.

The machines free the user from mixing and adding glue, selecting grades, controlling viscosity, and so on. The absence of glue eliminates cleaning the machine, and these savings give substantial increases in productivity and reductions in maintenance expenses. The labels offer a high degree of adhesion security that is useful, for example, for bottles subjected to high humidity, or steam of water saturation (14).

Of the two types of heat-seal paper, the delayed-action type is best suited for machine operation. The ability of the adhesive to remain tacky after removal of the heat source allows the machine designer to separate the heat source from the pressure application of the label. Thus the heating plates can be simple whereas the pressure-applying devices can be of complex shapes, enabling a diverse range of articles to be labeled, varying from flat to round or irregular shapes (10).

LABEL OVERPRINTING MACHINERY

For certain label applications there is a requirement to have a plain paper or preprinted label or labels

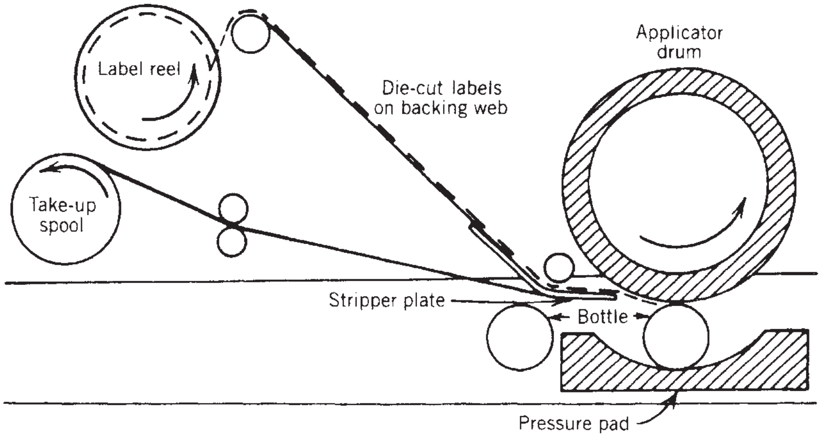

Figure 6. A common type of self-adhesive label applicator.

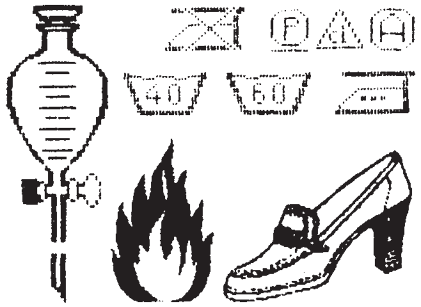

Figure 7. Electronically produced graphics are available on electronic label overprinters.

overprinted with price, price/weight, bar code, or other variable information just prior to or at the point of application. A variety of mechanical, electronic, or computer-based overprinting systems are available for such operations. These are now widely used by department stores, the retail and wholesale trade, industry, and even some label producers.

Mechanical overprinting systems range from small hand-operated machines with one or two wheelsets and two type channels, to hand-operated and electronic versions used for price/description labeling with either conventional or EDP-readable fonts (10).

The current trend in overprinting is away from mechanical to totally electronic overprinters, which can now print labels and tags without any form of marginal or sprocket-hole punching. Free formating and graphics, as well as alphanumeric information and bar codes, are now possible using such overprinting technology, the graphics being keyboard entered and edited. Graphics suitable for reproduction include product outlines, such as shoes, laboratory equipment, small hardware items, safety hazard designs, and laundry symbols. Figure 7 shows examples of such electronically produced and overprinted graphics.

BIBLIOGRAPHY

M. C. Fairley, “Labels and Labeling Machinery” in M. Bakker, ed., *The Wiley Encyclopedia of Packaging Technology*, 1st edition, John Wiley & Sons, New York, 1986, pp. 424–430.

Cited Publications

1. *A Guide to Legislation and Standards on Labelling* (UK), Labels & Labeling Data and Consultancy Services Ltd, Potters Bar, Herts, UK, 1984.
2. D. G. N. Alder, “Label Papers and Their Uses,” *Labels & Labelling* **14,** 16 (1979).
3. “The Most Important Types of Paper for Beverage Labels,” *Krones Manual of Labelling Technology,* Hermann Kronseder Maschinefabrik, Neutraubling, FRG, 1978, pp. 118–121.
4. A. Hildrup, “Review of the (UK) Gummed Paper Market,” *Labels & Labelling Yearbook*, **16**, 23 (1981).
5. M. Fairley, “The Challenge for Water-Borne Adhesives,” *Labels & Labelling*, **19**, 29 (1984).
6. M. Fairley and R. Brown, *Thermal Labelling,* Labels & Labelling Data and Consultancy Services Ltd., Potters Bar, Herts, UK, 1984.
7. M. Fairley, *Bar Coding,* Labels & Labelling Data and Consultancy Services Ltd., Potters Bar, Herts, UK, 1983.
8. N. Henderson, “Trends and Developments in Heatseal Label Materials,” *Labels & Labelling Yearbook* **16**, 31 (1981).
9. M. Fairley, *Label Printing Processes and Techniques,* Labels & Labelling Data and Consultancy Services Ltd., Potters Bar, Herts, UK, 1984.
10. *Labels—A Product Knowledge Book,* National Business Forms Association, Alexandria, VA, 1983.
11. *Labelling Operations,* Pira, The Research Association for the Paper and Board, Printing and Packaging Industries, Leatherhead, Surrey, UK, 1981.
12. E. Pritchard, “Labelling, and Labelling Systems,” *Labels & Labelling,* **17**, 16 (1982).
13. *Labelling—Basic Principles,* Pira, The Research Association for the Paper and Board, Printing and Packaging Industries, Leatherhead, Surrey, UK, 1980.
14. D. Miles, “Pre-adhesed Labelling,” *Labels & Labelling*, **16**, 20 (1981).
15. M. Noah, The Tadbik Group, personal communication (2008).

LAWS AND REGULATIONS, UNITED STATES

Ralph A. Simmons
Keller and Heckman
Washington, DC

There is no single body of law or regulations pertaining to all aspects of the manufacture, distribution, and use of packaging in the United States. Many different types of federal, state, and even local laws and regulations affect the packaging industry. These laws and regulations can be separated into two broad categories: (a) those that pertain directly to the packaging itself and (b) those that pertain generally to manufacturing and commercial transactions, including packaging among many other products.

This article focuses on the former category of legal requirements pertaining most directly to packaging. These include health and safety regulations of packaging materials, labeling requirements, and environmental laws and regulations relating to the disposal of packaging.

FDA’S REGULATORY FRAMEWORK FOR PACKAGING

The Food and Drug Administration (FDA) has primary regulatory authority in the United States over the safety of packaging used for food, drugs, cosmetics, and medical devices to the extent the products are in interstate commerce (which they almost always are).* The packaging for these products is regulated by the FDA so that it does not

---

*The U.S. Department of Agriculture (USDA) technically has authority over packaging used in federally inspected meat and poultry processing plants. However, in practice, USDA does not independently evaluate the safety of packaging materials, deferring to FDA on this issue.

cause the products themselves to become contaminated or "adulterated" in violation of the Federal Food, Drug and Cosmetic Act.

The most extensive of FDA's packaging regulations are the "food-additive regulations," which provide official permission for the use of substances as food ingredients (direct additives), and as components of food packaging or other food-contact materials (indirect additives). The FDA does not have regulations clearing specific materials for use in packaging for drugs, medical devices, or cosmetics. In the case of drugs and medical devices, packaging materials are reviewed and approved by the FDA in the context of approving the drug and medical-device products themselves, if such approval is necessary. The FDA does have a general requirement for tamper-resistant packaging for over-the-counter (OTC) drugs. Suppliers of packaging materials to drug and medical-device manufacturers typically assist those manufacturers in obtaining FDA approval by providing information on the packaging to the FDA through a confidential drug or device master file. Neither cosmetic products nor their packaging are subject to premarket clearance by the FDA; it is up to the cosmetics manufacturer and its packaging suppliers to ensure that the products and packaging are safe for their intended use.

Definition of Food Additive. The FDA's regulation of food packaging is based on Section 201(s) of the Federal Food, Drug and Cosmetic Act. Section 201(s) of the Act defines a food additive, in relevant part, as follows:

> [A]ny substance the intended use of which results or may reasonably be expected to result, directly or indirectly, in its becoming a component … of any food … if such substance is not generally recognized … to be safe under the conditions of its intended use; except that such term does not include …
>
> (4) any substance used in accordance with a sanction or approval granted prior to the enactment of this paragraph pursuant to this Act (4)

Section 409 of the Act requires that a food additive, as defined above, must be the subject of an applicable food-additive regulation.[†] Thus, substances used in food-contact applications that, under their intended conditions of use, may reasonably be expected to become components of food are "food additives" and can be used only in accordance with an applicable food-additive regulation unless they are either (a) the subject of a prior sanction or approval granted by FDA or the U.S. Department of Agriculture (USDA) prior to the enactment of the Food Additives Amendment of 1958 or (b) generally recognized as safe (GRAS). If the substance is not reasonably expected to become a component of food under the intended conditions of use, however, it is not a food additive within the meaning of Section 201(s) of the Act, and may be used as intended without the need for consultation with or prior action by the FDA

The Food-Additive Regulations. The FDA's food-additive regulations, found in Title 21, Parts 170–197 of the Code of Federal Regulations (CFR), cover both direct and indirect additives. The term "direct food additive" commonly refers to materials directly and intentionally added to foods to perform a functional effect in the food. The term "indirect food additive" generally refers to substances that are not intended to, but nevertheless become, components of food as a result of use in articles that contact food (e.g., substances used in packaging materials).

Over the years, indirect food-additive regulations have been promulgated in response to individual food-additive petitions with no overall structural scheme. This has led to the existence of three general types of indirect food-additive regulations: those that clear specific polymers (e.g., Section 177.1520, applicable to polyolefins), those that clear substances categorized by function (e.g., Section 178.3400, applicable to emulsifiers and surface-active agents), and those that list substances that may be used in specific types of packaging (e.g., Section 176.170, applicable to components of paper and paperboard). For this reason, a great deal of overlap among different regulations has occurred.

A major limitation on the types of substances that may be listed in the food-additive regulations is the so-called Delaney Clause of the Federal Food, Drug and Cosmetic Act. The Delaney Clause prohibits the FDA from issuing regulations permitting the use as food additives of substances that are "found to induce cancer when ingested by man or animals" (1).

The FDA has mitigated the impact of the Delaney Clause, however, by interpreting it to apply to the finished food ingredient or food-contact material itself, not to constituents or components of the food additive (e.g., the Delaney Clause applies to polymers used to make food packaging but not to monomers used to make the polymers). This "constituents policy" is not set forth in any law or regulations but is applied by the FDA in evaluating food additive petitions, was described by FDA in an Advance Notice of Proposed Rulemaking, and has been upheld by the courts (2).

Prior-Sanction Exemption. The Federal Food, Drug and Cosmetic Act specifically exempts from the definition of a food additive any substance that is "prior-sanctioned," which means any substance permitted for its intended use by an FDA or USDA letter or memorandum written prior to the Food Additives Amendment of 1958. Unfortunately, no authoritative master list exists for the materials covered (3).[‡] If a company has any such letters in its files or knows of any relevant ones elsewhere, they can be relied on, but the FDA interprets such letters narrowly.

"Generally Recognized as Safe" Exemption. Another exemption from the food additive definition pertains to

---

[†] Food that contains an uncleared food additive is considered "adulterated" and would be subject to adverse FDA regulatory action.

[‡] The *Food Chemical News Guide*, commonly known in industry as the "Knife and Fork" book, contains listings of both direct and indirect food additives and their status under the Food and Drug Regulations; the "Knife and Fork" book also documents public "prior sanctioned" status of substances. The *Guide* is regularly updated.

GRAS substances. Section 174.5(d)(1) of the *Food Additive Regulations* states that substances generally recognized as safe "among experts qualified by scientific training and experience to evaluate their safety" are permitted to be used as components of articles that contact food. Parts 182, 184, and 186 of the *Food Additive Regulations* provide a listing of some substances that are considered by the FDA to be GRAS, but the substances actually listed in the regulations by no means constitute all substances that are GRAS.[§] Section 182.1 of the *Food Additive Regulations* makes it clear that the GRAS listings are by way of illustration and do not represent an all-inclusive list. Furthermore, the absence of a substance from the list does not preclude a company from making a self-determination that its products are GRAS, where such a determination is supported by the available information.

The FDA has codified requirements for the classification of food additives as GRAS under 21 *CFR* 170.30(a). As stated in that provision, general recognition of safety must be based on (a) scientific procedures or (b) in the case of a substance used in food prior to January 1, 1958, through experience based on common use in food. The general recognition of safety requires a "common knowledge" about the substance throughout the scientific community about the safety of substances directly or indirectly added to food. For substances not widely used in food prior to 1958, general recognition of safety requires the same quantity and quality of scientific evidence as is required to obtain approval of a food additive regulation for the ingredient. Unlike a food-additive petition, however, general recognition of safety is ordinarily based on published studies that may be corroborated by unpublished studies and other data and information (4).

The exclusion of GRAS substances from the definition of the term "food additive" means that such substances do not require premarket clearance by the FDA. Any manufacturer who determines that a particular substance is GRAS is free to market the substance without notification to, or approval by the FDA. Obviously, if the FDA should consider the manufacturer's determination of GRAS status to be erroneous, then the Agency can take appropriate regulatory action; in such a case, the burden of proof would fall on the FDA to demonstrate that the substance is not GRAS. This is an unlikely consequence unless a real public-health problem is presented.

A manufacturer who pursues a self-determined GRAS position for a substance can also file a GRAS Affirmation Petition (GRASP) with the FDA seeking the Agency's concurrence. In contrast to a Food Additive Petition, if a GRASP is accepted by the FDA for filing, then the petitioner may market the product while the petition undergoes technical review because FDA has been informed of the manufacturer's determination that the product is GRAS and has raised no objection. However, unlike a Food Additive Petition, all materials submitted in support of the GRASP become immediately available in full to the public, and even manufacturing details cannot be kept confidential. The requirements and type of information a petitioner must supply for a GRASP are spelled out in 21 *CFR* § 170.35.

The "No-Migration" Exemption. One of the most important means of establishing satisfactory FDA status for an indirect additive is to establish a rational basis on which to conclude that there is no reasonable expectation of the substance becoming a component of food. If a substance is not reasonably expected to become a component of food under its intended conditions of use, it is not a food additive by definition and, therefore, may be so used without obtaining any FDA "approval." Unfortunately, the FDA has not provided definitive, objective criteria for determining when a substance in a food-packaging material may reasonably be expected to become a component of food. Nevertheless, reliable guidance is available from at least two different sources:

1. *Ramsey Proposal*. The first source of guidance is a proposal circulated by the FDA as its response to widespread criticisms by the food-packaging industry at the National Conference for Indirect Additives held in Washington, DC in February 1968. This so-called Ramsey proposal would have acknowledged in a regulation the propriety of the use, without the prior promulgation of a food-additive regulation, of substances that will transfer from packaging or other food-contact articles to food at levels no higher than 50 parts per billion (ppb); components of articles used in contact with dry, nonfatty foods; and components of articles intended for repeated use in contact with bulk quantities of food. This would have applied to all substances except those known to pose some special toxicological concern, such as a heavy metal, which is a known carcinogen, or something that produces toxic reactions at levels of 40 parts per million (ppm) or less in the diet of humans or animals. Although never formally adopted, the standards in the Ramsey proposal were deemed scientifically acceptable and have been generally honored by the FDA either explicitly or by its having taken no enforcement action in cases where the criteria are met.
2. *Monsanto v Kennedy*. The second source of clarification of the "food additive" statutory definition is provided by a U.S. Court of Appeals decision. In *Monsanto v Kennedy*, 613 F.2d 947 (D.C. Cir. 1979) the FDA argued that any contact of a packaging material with food must result in some transfer of the packaging constituent to the contained food. The Court rejected this argument and stated:

    > Congress did not intend that the component requirement of "food additive" would be satisfied by … a mere finding of any contact whatever with food…. For the component element of the definition to be satisfied, Congress must have intended the Commissioner to determine with a fair degree of confidence that a substance migrates to food in more than insignificant amounts (5).

Role of Extraction Studies. On the basis of the Ramsey proposal and the *Monsanto* precedent, it is widely

---

[§] Idem. The "Knife and Fork" book also documents filings and status of petitions to FDA for listing of substances as GRAS in the regulations.

accepted that if extraction testing properly simulating the intended conditions of use for a potential additive does not yield detectable migration of the additive or its components at an appropriate analytical sensitivity, then the substance is not reasonably expected to become a component of food under these conditions and, thus, is not a food additive within the meaning of Section 201(s) of the Act. The industry generally considers a finding of "nondetected" in a properly conducted migration study using methods sensitive to the equivalent of 50 ppb of the substance in contacted food to be a sound basis for concluding that a substance is not a food additive. However, in some cases, it is necessary to make use of analytical methodology that can detect as little as 10 ppb or even 1 ppb to support a "no-migration" determination because of the sensitive nature of the material being used, such as a heavy metal or a substance for which there will be a high level of use, such as milk or soda containers.

General Adulteration Provision. If the packaging material is not reasonably expected to become a component of food and is, therefore, not a food additive, it is still subject to the nonadulteration provision of the Act. The FDA sometimes refers to this as the general safety clause, contained in Section 402 of the Act. This general prohibition against adulteration is the basis for the FDA's "good manufacturing practice" regulation, which requires that "[a]ny substance used as a component of articles that contact food shall be of a purity suitable for its intended use" (6). Fortunately, the same analysis that demonstrates that a material will not become a component of food will also satisfy the Act's general safety requirements for food-packaging material, specifically, that the packaging will not adulterate the food by rendering it injurious to health.

The "Basic Resin Doctrine" Exemption. A significant characteristic of the *Food Additive Regulations* is that the FDA clears substances on a generic rather than a proprietary basis. In the case of resins and polymers, as long as the basic resin is listed in a regulation, is manufactured in accordance with good manufacturing practices, and complies with applicable limitations such as stated extraction requirements, it is covered by that regulation even though different manufacturers may make the resin by different processes and employ different catalysts, reaction control agents, and the like.

A "basic polymer" is the material that comes out of the polymerization "kettle" or reactor, that is, the product that results when the polymerization process has been carried to commercial completion. Substances such as catalyst residues, chain-transfer agents, minor comonomers, and other materials required to produce the basic resin are considered a part of it and are *not* subject to independent regulatory consideration. The FDA's basis for this principle is that, where a substance is used only in a small quantity and either becomes part of the resin during polymerization, or is washed from the resin at the conclusion of polymerization, its potential for significant migration is minimal. In other words, there is no reasonable expectation of migration, and therefore the substance is not considered an independent food additive.

The basic polymer doctrine also reflects the practical reality that the FDA cannot write generic regulations for food-packaging materials that describe and specifically clear every substance that might properly be a trace component or contaminant of the packaging material as a result of every manufacturing process that yields a suitable resin. Because trace quantities of these "unregulated substances" are not perceived to present a public-health hazard, the FDA has wisely chosen not to subject these substances to the burdensome preclearance provisions of Section 409 of the Act that apply to food additives.

Generally speaking, it is reasonable to consider catalysts and minor comonomers to be covered by the basic polymer doctrine when used at levels of up to approximately 0.5%; between this level and 1%, the substance and use in question must be evaluated on a case-by-case basis. At levels above 1%, the basic polymer doctrine is not considered applicable.

Even if a component of a food-contact material falls within the basic-polymer doctrine, the finished food-contact material must still satisfy the necessary purity requirements of the *Food Additive Regulations;* that is, it must be of a purity suitable for its intended use, as required under 21 *CFR* § 174.5(a)(2). Obviously, if a particular catalyst being used were to render a finished food-contact material unsafe or unfit for its use, that material would not satisfy the purity requirements.

The Housewares Exemption. The components of eating utensils, receptacles, paper towels, or other kitchenware, sold as such, are outside the scope of coverage of the Food Additive Amendments of 1958, and therefore these products do not require premarket clearance by the FDA. This has come to be called the "housewares" exemption. This exemption is grounded on a declaration of intent in the legislative history of the 1958 Food Additives Amendment. The following statement appears in the official record of the debate on the Amendment and was made by the floor manager of the bill, The Honorable John Bell Williams, Chairman of the House Subcommittee on Health and Science:

> I have been asked since the Committee report of the bill what is meant by a substance "holding" food, as mentioned in the bill. An example of what is meant by this would be a plastic film or paper wrapper which surrounds the package of food. This bill is not intended, for example, to give the Food and Drug Administration the authority to regulate the use of components of dinnerware or ordinary eating utensils (7).

The FDA has written many letters affirming this exclusion. The exclusion of housewares from the need for filing foodadditive petitions is a recognition that such products generally do not give rise to any public-health concern. However, the FDA does take action against products falling within the housewares exemption in instances involving migration of a substance, such as lead, which has been proven to pose a true public health concern.

Threshold of Regulation. The exemptions from the FDA's premarket clearance authority discussed so far all have one important characteristic in common—a company is entitled to determine for itself whether the exemptions apply and whether no consultation with or concurrence by the FDA is required. The FDA recently has adopted an additional exemption that only the Agency itself may apply, which is called the Threshold of Regulation.

In 1995, the FDA published the final rule establishing the Threshold of Regulation, which is the FDA's "process for determining when the likelihood or extent of migration to food of a substance used in a food-contact article is so trivial as not to require regulation of the substance as a food additive" (8). The "threshold" level is defined as a dietary concentration of 0.5 ppb or less. The threshold for substances that have been cleared by the FDA as direct additives is that the indirect or packaging use must be limited to 1% or less of the acceptable daily intake established by the Agency for the direct use of the substance. To be eligible for the exemption, the food-contact material must not be a carcinogen and must not contain carcinogenic impurities that are more potent than a certain level defined in the regulation (the impurity cannot have a TD_{50} value of <6.25 mg/kg bw (body weight) per day, with TD_{50} defined as the feeding dose that causes cancer in 50% of the test animals.

The FDA has reserved to itself the authority to grant official exemptions from regulation under the Threshold of Regulation Rule. However, in proposing the Rule, the FDA explicitly recognized the continuing right of a company to determine on its own "that a particular use of a substance does not meet the definition of a food additive" (9). Therefore, companies continue to be entitled to determine for themselves whether the "no migration" exemption or any of the other exemptions from the definition of "food additive" apply to a particular intended use of a food-packaging material.

The Food-Additive Petition Process. If none of the exemptions from the FDA's premarket food-additive regulatory authority is available for a packaging material, then regulatory clearance must be obtained from the FDA through a food-additive petition. Section 409(b) of the Federal Food, Drug and Cosmetic Act permits any person to petition the FDA for a regulation prescribing the conditions under which an additive may be safely used. The Act delineates generally the type of information to be submitted in support of a petition and the procedures and substantive parameters to be followed by the FDA in considering a petition. Additional detail on these information requirements and procedures is provided in Part 171 of the *Food Additive Regulations*.

Reduced to its fundamentals, a food-additive petition must describe the substance to be cleared, provide an estimate of the quantity that will enter the diet, and demonstrate that this quantity will be safe. The Act requires the FDA to act on a petition within 90 days, with one extension for an additional 90 days available to the Agency. In practice, few petitions are acted on in 18 months or less, and most are under review for at least 2–3 years.

In 1995, several industry groups representing food manufacturers and their packaging suppliers revived their efforts to reform the legal system for food-additive regulation by the FDA. The basic goals of this effort are to replace the Delaney Clause with a negligible risk standard based on sound science and to require the FDA to accelerate the process of reviewing food-additive petitions. With respect to packaging materials, the proposed reforms would replace the petition process with a premarket notification system. The FDA would have 120 days to review the data on a new packaging material. The material would be permitted for use at the end of the 120-day period unless the FDA objected on the basis of real safety concerns.

FDA Regulation of Recycled Materials for Food Packaging. A specialized area commanding much attention in the early 1990s has related to the recycling of postconsumer waste materials, which includes their use in some cases to make food packaging. There is no legal requirement to obtain any special or new FDA "approval" for the use of recycled material in food packaging. The FDA has no special regulations governing recycled materials, with the exception of a regulation on recycled paper that merely restates the universal FDA requirement that all food-contact materials must be suitably pure for their intended use (10). The Agency generally regulates food-contact materials on the basis of their composition, not on the specific process by which they are manufactured or the source of the raw materials. Any food-contact material (whether plastic, glass, metal, or paper and whether virgin or recycled) must meet the safety requirements of the Act and the specifications and limitations of any food-additive regulations applicable to the generic type of material (11).

Although no FDA approval is required for recycled content in food packaging, the requirements of food companies for assurance that recycled materials are safe has resulted in a common industry practice of seeking an official blessing from the FDA, particularly with respect to recycled plastics. These blessings take the form of so-called no-objection letters from the FDA. The Agency generally applies the "Threshold of Regulation" analysis to requests for these letters, requiring a showing that any potential contaminants in the recycled material have been reduced to the "threshold" dietary concentration of 0.5 ppb or below.

ENVIRONMENTAL LAWS AND REGULATIONS

The Federal Role: Environmental Protection Agency (EPA). The EPA, which is the primary federal agency responsible for regulating waste disposal, has broad authority over the management of solid waste under the Resource Conservation and Recovery Act (RCRA) (12),[¶] as well as the Clean Air Act (13), the Clean Water Act (14), and the Comprehensive

---

[¶] Under the complex RCRA statute, Congress has divided waste management into two discrete universes: hazardous waste, which is regulated under subtitle C of the statute (42 *USC* 6901), and all other waste, which is regulated under subtitle D. Most packaging waste is subject to subtitle D, which governs MSW. During the past decade, most of EPA's resources have been directed toward toughening standards for land disposal of subtitle C hazardous waste to make them commensurate with pollution controls already in place for air emissions and water discharges under the Clean Air Act and Clean Water Act.

Environmental Response, Compensation and Liability Act (15) (commonly referred to as "Superfund"). This authority includes the power to set standards for the design and operation of landfills and incinerators and other modes of waste disposal.

In general, EPA's modus operandi for dealing with solidwaste management issues, particularly issues concerning packaging, has been to make recommendations, such as on preferred options for waste disposal, but to leave much of the actual regulation of waste to state and local officials.[‖] At this time, the EPA has no specific rules governing the disposal of postconsumer packaging waste.

State Regulation. A few states have adopted bans or other limitations on packaging that does not meet certain standards of "environmental acceptability." The criteria of environmental acceptability in these proposals are typically that the packaging be recycled at a specified rate, be reusable, or be made from recycled materials.

California enacted a law in October 1991 that purported to ban, as of January 1, 1995, rigid plastic containers that (a) are not composed of 25% postconsumer material; (b) do not have a recycling rate of 25% (55% in the case of PET containers, if measured separately); (c) are not source-reduced by 10%; or (d) are not reusable or refillable five times (16).

The statute contains significant waiver and exemption provisions. The state will waive the postconsumer material content requirement if it finds that (a) the containers cannot meet the content requirement and remain in compliance with FDA regulations or other state or federal laws or regulations or (b) the use of containers meeting the content requirement is "technologically infeasible." The statute also exempts containers for food, cosmetics, drugs, medical devices, medical food, or infant formula.

Oregon has a statute nearly identical to California's (17). The Oregon law has a permanent exemption for food packaging, except for beverage containers.

Wisconsin has a law purportedly requiring 10% recycled content in plastic containers (18). However, this law will go into effect for FDA-regulated products only if the FDA has "approved" the use of recycled content through a "formal" procedure. So far, FDA's "no-objection letter" approach to permitting recycled materials has not been recognized by Wisconsin as a "formal" procedure. Wisconsin also has banned recyclable packaging from landfills and incinerators (19), but has been granting a series of 1-year waivers for certain plastic packaging that is not widely collected for recycling.

Nine states have deposit laws that place a surcharge on certain beverage containers, and provide a refund of the surcharge to consumers who return the containers for recycling.[**] California has its own modified form of deposit law, known as AB (Assembly Bill) 2020, under which, in addition to collection and refund of deposits, industry may be assessed fees on the basis of costs of recycling.

CONTROL OF ALLEGED TOXIC SUBSTANCES IN PACKAGING

State Restrictions on the Heavy-Metal Content of Packaging. Eighteen states[††] have enacted statutes restricting lead, cadmium, mercury, and hexavalent chromium in inks, dyes, pigments, adhesives, stabilizers, and other components of packaging. These laws are based on model legislation developed by the Coalition of Northeastern Governors (CONEG).

California's Proposition 65. Perhaps the most far-reaching state environmental law directly affecting packaging and other consumer products is California's Safe Drinking Water and Toxic Enforcement Act,[‡‡] which is popularly known as "Proposition 65." Proposition 65, approved by California voters as an initiative in 1986, is a right-to-know law that requires companies to either establish that their products are not likely to expose any individual to a "significant" amount of any of over 400 chemicals, or to provide a "clear and reasonable" warning that the product contains a known carcinogen or reproductive toxin. To avoid the warning requirement, a manufacturer must establish that exposure to a chemical listed under Proposition 65 from a particular package or other product presents "no significant risk." The state has established "no significant risk levels" for some, but by no means all, of the substances listed under Proposition 65.

LABELING

For most packaging, the requirements pertaining to labeling will depend on the nature of the product contained within the package. Many products require only that the labeling not be false or deceptive. This standard is enforced on a nationwide basis by the Federal Trade Commission (FTC)[§§] and by appropriate authorities in each state, enforcing the so-called "Little FTC Acts."

[‖] EPA advocates, but does not mandate, an integrated waste management approach based, in order of preference, on (a) source reduction, (b) recycling and composting, (c) incineration, and (d) land disposal (EPA, 1989).

[**] The nine states with deposite laws are Connecticut, Delaware, Iowa, Maine, Massachusetts, Michigan, New York, Oregon, and Vermont.

[††] The 18 states that have adopted versions of the CONEG heavy-metals restrictions are Connecticut, Florida, Georgia, Illinois, Iowa, Maine, Maryland, Minnesota, Missouri, New Hampshire, New Jersey, New York, Pennsylvania, Rhode Island, Vermont, Virginia, Washington, and Wisconsin.

[‡‡] California Health & Safety Code § 25249.5-.13.

[§§] The FTC regulates false, deceptive, or misleading advertising pursuant to authority granted the Agency under section 5 of the Federal Trade Commission Act [15 *USC* § 45(a) (1)], which prohibits unfair or deceptive acts and practices affecting interstate commerce. The Commission has interpreted the act as essentially requiring companies to be able to substantiate the truthfulness of both express claims and any inferences a reasonable consumer is likely to draw from the express claim.

Certain products, however, are subject to special labeling laws and regulations, frequently for health or safety reasons.

FDA Regulation. The FDA regulates the labeling on packaging for foods, drugs, cosmetics, and medical devices. The Federal Food, Drug, and Cosmetic Act prohibits the "misbranding" of FDA-regulated products. A product is "misbranded" if its labeling is "false or misleading," or if it violates other specific statutory or regulatory requirements.

The FDA has issued separate regulations pertaining to the labeling of foods, drugs, cosmetics, and medical devices. The food labeling regulations are the most extensive of the group and now include a requirement for nutrition labeling on most food packages.[¶¶]

Packaging and Labeling of Hazardous Materials. The U.S. Department of Transportation (DOT) regulates the packaging and labeling of hazardous materials for interstate shipment (and has proposed extending its regulations to intrastate shipments as well). The authorized types of packaging and the required labeling vary according to the degree of hazard presented by a particular material (21).

ENVIRONMENTAL ADVERTISING AND LABELING

Federal and State Guidelines. Labeling and advertising claims about the environmental attributes of packaging or products are not subject to special laws or regulations at the federal level or in most states. The permissibility of particular claims generally is tested according to the "false or deceptive" standard of the Federal Trade Commission Act and similar state laws.

Both federal and state authorities have issued guidelines for applying the "false or deceptive" standard to environmental labeling and advertising. In July 1992, the FTC released its *Guidelines for Environmental Marketing Claims*. The *Guidelines* address eight categories of claims: general claims such as "environmentally friendly," degradable claims, compostable claims, recyclable claims, recycled content claims, source-reduction claims, refillable claims, and ozone-safe/ozone-friendly claims. The FTC is currently reviewing its *Guidelines* to determine whether they should be modified to be more effective. The *Guidelines* do not have the force of law but are considered authoritative statements of the way in which the FTC will exercise its enforcement authority. A task force of the state attorneys general also issued guidelines in 1991, known as the *Green Report II*, addressing the same types of claims covered by the FTC *Guidelines*, but taking a more restrictive approach. In the absence of formal regulations issued by the FTC, states can enforce stricter limitations on environmental claims than would the FTC.

State Regulation. A few states have actually adopted laws or regulations limiting environmental claims for products and packaging. Two states, California and Indiana, enacted laws governing environmental advertising, including use of such terms as "recycled" and "recyclable" (22). California's law was challenged in court as an infringement on commercial free speech (23). Although most of the law was left intact when the United States Supreme Court declined to hear the case, California subsequently repealed the essential provisions of the law. Indiana's law as enacted was similar to California's, but the state now defers to the FTC's *Guidelines*.

Some states, such as New York and New Hampshire, specifically restrict use of the terms "recycled" and "recyclable" (24). Both New York and New Hampshire restrict the use of the term "recycled" to products containing a certain minimum percentage of postconsumer material. They also require significant levels of recycling for a package or product to be labeled "recyclable."

BIBLIOGRAPHY AND NOTES

1. 21 *United States Code (USC)* § 248 (c) (3) (A).
2. 47 *Federal Register* 14464 (April 2, 1982); *Scott v Food and Drug Administration*, 728 F.2d 322 (6th Cir. 1984).
3. *Food Chemical News Guide*, published by Food Chemical News, Inc.
4. 21 *Code of Federal Regulations (CFR)* § 170.30 (b).
5. *Monsanto v Kennedy*, at 948; see also, *C & K Manufacturing & Sales Co. v Clayton Yeutter*, 749 F. Supp. 8 (D.D.C. 1990).
6. 21 *CFR* § 174.5.
7. 104 *Congressional Record* 17,418 (1958).
8. 60 *Federal Register* 36582 (July 17, 1995).
9. 50 *Federal Register* 52720 (1993).
10. 21 *CFR* § 176.260.
11. A. Rulis, "FDA's Current Thinking on Recycled Polymers for Food-Contact Use," presented at the GMA Environmental Issues Conference on Solid Waste, Washington, DC, May 1, 1991.
12. 42 *USC* § § 6901 et seq.
13. 42 *USC* § § 7401 et seq.
14. 33 *USC* § § 251 et seq.
15. 42 *USC* § § 9601 et seq.
16. California Public Resources Code § § 42300-42340.
17. Oregon Revised Statues § § 459A.650-459A.665.
18. Wisconsin Statutes Annotated § 100.297.
19. Wisconsin Act 335 (1989).
20. Public Law Number 101-535, now found in 21 *USC* § 343.
21. See 49 *CFR* § § 172.400-407 for the labeling requirements and § 173.24 for the packaging requirements.
22. *California Business and Professions Code* § 17508.5; Burns Indiana Code Annotated § 24-5-17-1.
23. *The Association of National Advertisers, Inc., et al. v Lungren*, Docket No. C-92-0060, United States District Court for the Northern District of California.
24. New York Environmental Conservation Law § 27-0717; New Hampshire Revised Statutes Annotated § 149-N: 1.

[¶¶] The nutrition lableing requirement was added to the Federal Food, Drug and Cosmetic Act by the Nutrition Labeling and Education Act of 1990.

General References

A. Schmidt, "Ideas and Reality in Actual Regulatory Experience," *Regul. Toxicol. Pharmacol.* (Sept. 1988).

J. Heckman, "Fathoming Food Packaging Regulations," 42 Food Drug Cosmetic Law J. 38 (Jan. 1987).

Food and Drug Administration, *A Food Labeling Guide*, Sept. 1994.

LEAK TESTING

George W. Arndt, Jr.
Schreiber Foods Inc., Green Bay, Wisconsin

INTRODUCTION

The function of a package is to protect products from changes brought about by the outside environment. Prior to the development of packaging, food-borne diseases caused by pathogenic microorganisms were one of the most serious problems faced by humans. Microorganisms excrete enzymes that break down materials releasing nutrients that they can absorb. Packaging made from synthetic materials are generally resistant to microbial enzymes and thus can serve as a barrier preventing the attach of microbes. During prolonged dry periods, many microorganisms survive inactively as spores. Bacteria, yeast, and mold require water to feed, grow, and reproduce, so packages need to be maintained in a clean and dry condition. Packages are inspected before they are filled for evidence of water stains, foreign materials, and contamination. Then packages may be washed or blown with compressed air to remove dust-containing spores. Thermal processing and chemical preservatives kill vegetative microorganisms and many, but not all, spores. During filling and closure, care must be exercised to assure minimal contamination of package seals that would create defects. Package defects form a pathway for microbial penetration and infection. The quality control aspects of packaging by processors focus upon sanitation and closure integrity (see also Testing, Permeation and Leakage). There are many ways to assess the microbial barrier of packages. Since package styles, closures, and materials differ widely, there is no universal test method. It is necessary to evaluate various methods to determine one that is reliable under the conditions of use.

DESCRIPTIONS OF TEST METHODS FOR PACKAGE INTEGRITY

Below are brief descriptions of some methods for package integrity testing. For detailed descriptions, see the *Bacteriological Analytical Manual*, 7th edition, published by the FDA.

1. Air-leak testing involves pressure decay or measurement of airflow rates.
2. Biotesting uses solutions with concentrations greater than one million nonpathogenic microorganisms per milliliter. Individual packages are immersed and pressure, vacuum, or mechanical flexing is applied to distort the package. Alternatively, packages contained within a chamber may be sprayed with an aerosol mist containing microorganisms.
3. Burst testing may be used as a dynamic test where the maximum force required to explode a package is used as an index of seal strength, or as a static test where packages are held at a fixed pressure to determine if the package will maintain pressure for a specific period of time.
4. Chemical etching separates or dissolves overlaying materials to expose the sealant layer of packages. This is useful for visual examination of contaminated seals of plastic and paperboard packages.
5. Compression testing is a burst test using pressure applied to the outside of a package. Weak packages will crush or burst, while stronger packages should not.
6. Distribution testing is a simulation of forces that are likely to be incurred by packages during storage and distribution. Tests include vibration, drop testing, and compression in a laboratory having controlled temperature and humidity. Simulated abuse testing is useful for side-by-side comparison of two or more package designs in order to determine if one package design is more fragile than another. Simulation testing is preferred over shipping tests because there are fewer variables and results from simulated distribution testing are generally reproducible.
7. Dye testing is used to determine if holes in packages are present or not present. Water-soluble dyes should be used with plastics or paperboard packages, and solvent-based penetrating dyes should be used with glass or metal packages.
8. Electesting is a nondestructive method for liquid foods that change viscosity as they spoil. A shock wave is created by shaking the package. The amplitude and wavelength of the shock wave is a characteristic of the viscosity of liquids. When the device detects a signal response outside the normal range, the package is rejected. Other tests may be used to examine rejected packages for leaks.
9. The electrolytic test uses electricity to determine whether holes are present in plastic films, coatings, and seals. The detector is an open circuit that uses electrolyte or metal components of the package to conduct electricity. Holes are indicated when the circuit closes activating alarms. Liquid products containing at least 1% salt, or a solution containing 1% table salt (NaCl) in tap water, may be used to conduct electricity through very small holes in packages having plastic layers. Breaks in the

coatings of metal cans may be located using this method. Porous coatings and breaks in coatings expose metal to the product, and these are the locations where corrosion can occur.

10. Gas leaks may be detected by mass spectrophotometer or a gas chromatograph. Helium is a useful tracer gas, because it moves readily through small holes in packages. Sulfur hexafluoride is inert like helium and may be used to detect, locate, and measure small holes in packages in a nondestructive manner.
11. Incubation is a test that encourages the growth of microorganisms that are present within packages. Packages that swell as a result of microbial fermentation of the product may be identified by visual inspection. The test can be performed on large numbers of packages while they are held in a warm warehouse.
12. Light may be used to spot holes in packages. Visible light is used to backlight packages and reveal small holes. Polarized light can reveal areas within transparent plastic heat seals that are not fused or have different amorphous or crystaline compositions. X-rays are used to detect foreign materials such as stones and glass shards within sealed packages. Lasers are used to measure very small differences in package dimensions that indicate a leak has allowed packages to change shape. Laser shearography may be used to measure the effect of stress on packaging materials.
13. Machine vision may be used to measure critical dimensions of packages traveling rapidly along conveyors. Strobe lights stop the action as the video image is digitized. The picture is compared to images stored in computer memory. Parallel networks enable rapid comparison of images to standards. Nonconforming packages are sidelined for inspection by technicians using other tests for integrity.
14. Eddy-current meters sense the position of metal in packages. Concave ends indicate retained vacuum. Flat ends indicate packages have lost vacuum. The profile of container ends is consistent when the package, product, and filling conditions are rigorously controlled. Proximity sensors may also be used to measure the position of metal components of packages when a force is applied. Those packages that respond differently under stress may be identified by this method.
15. Seam scopes are large-format low-power microscopes. Mechanical or electronic measuring devices may be used to measure critical dimensions. Specialized devices are designed for viewing cross sections of metal can double seams. The dimensions of very small holes may be measured using a seam scope as a microscope.
16. Sound is a novel nondestructive testing method. Rigid packages with internal vacuum may have ends tight, like a drum. Tapping on a can end reveals a difference in sound between a normal can and one that has lost vacuum. Electromagnets may be used to pull up can ends, which then snap back. A transducer can register the sound for analysis. Ultrasonics and laser acoustics may be used to measure pressure within packages without contact. Ultrasonic microscopy may be used to evaluate defects between layers and stress patterns in metals, and plastics.
17. Tensile testing is a term applied to laboratory methods that stress packages or materials by pulling to create tension. Plastic ends and metal pull tabs on packages may be peel-tested. Composite materials may be delaminated and the strength of adhesion and cohesion measured. Glue bonds may be evaluated using tensile tests. Pieces of metal or film may be pull-tested to determine elasticity, stretching, and break strength.
18. Vacuum may be used to test packages in many ways. Packages dipped in soapy water to coat the surface before being placed within a vacuum jar will exhibit bubbles revealing the location and approximate size of a leak. If the vacuum chamber is filled with water and the package held below the surface, a steady stream of bubbles in the water may reveal the location of the leak on the package. Vacuum decay within a closed vessel is a useful method for measuring small leaks over a period of time.
19. Visual inspection is the most common method of package inspection. Holes as small as 100 μm may be seen with unaided normal vision under ideal lighting conditions. Unfortunately, inspectors quickly fatigue and the best visual inspection is only 85% effective.

SELECTING THE RIGHT TEST METHOD

Some test methods are specific to materials and others are specific to the design of the package closure. No single test method will work for all applications.

First, begin by collecting as many different package defects as possible and group them according to their public health significance. A three-class system for package defects is used in the United States:

1. Critical defect
   a. Loss of the microbial barrier
   b. Evidence of microbial growth within package holes, fractures, punctures, swelling and leakage
2. Major defect
   a. Might leak, but has not yet leaked
   b. Testing is needed to determine whether packages will leak
   c. Weak seals, deformed double seams, deep scratches, cracks, creases

Table 1. Recommended Test Methods for Food Packages[a]

Package descriptions

1. Paperboard packages
2. Flexible pouches
3. Plastic packages with heat-sealed lid
4. Plastic cans with double-seamed metal end
5. Metal cans
6. Glass bottles and jars

Test Method	1	2	3	4	5	6
1. Air-leak testing	O	O	O	O	O	O
2. Biotesting	O	O	O	O	O	O
3. Burst testing	O	X	X	O	NA	NA
4. Chemical etching	O	O	O	NA	NA	NA
5. Compression, squeeze testing	X	X	O	O	NA	NA
6. Distribution (abuse) testing	O	O	O	O	O	O
7. Dye penetration	X	O	X	O	X	X
8. Electesting	O	NA	NA	O	O	O
9. Electrolytic	X	X	O	NA	NA	NA
10. Gas-leak detection	O	O	O	O	O	O
11. Incubation	X	X	X	X	X	X
12. Light	NA	O	O	O	O	O
13. Machine vision	O	O	O	O	O	O
14. Proximity tester	O	O	O	X	X	X
15. Seam scope projection	NA	NA	NA	X	X	X
16. Sound	X	NA	X	X	X	X
17. Tensile (peel) test	NA	X	X	O	O	O
18. Vacuum testing	NA	O	X	O	X	X
19. Visual inspection	X	X	X	X	X	X

[a] X, recommended method; O, optional method; NA, not appropriate method.

3. Minor defect
   a. Do not leak
   b. Are of economic, not public health, concern
   c. Flex cracks, dents, abrasions, convolutions

Classification of defects has been completed for packages that contain food products that may support the growth of *Clostridium botulinum*, the bacteria causing botulism. Sources of information are listed in the bibliography at the end of this article.

Second, make a drawing of the package for each type of defect. Mark the drawings to show the location of the defects. This graphic summary will reveal where defects occur most frequently on the package. Photos of representative defective packages will also be useful.

Third, select the test method most likely to reveal the defect at the point on the package where it occurs. Methods that test the entire package are preferred to methods that test only a portion of the package. With most test methods for package integrity, the design of fixtures to hold packages during testing is important. Dynamic test methods apply stress to packages, and changes may be measured over a range. Static tests apply pressure at a fixed level, and measurement is made after the package has been under this condition for a specified period of time. Evaluation of packages is needed to determine when a static or a dynamic method provides better results.

Fourth, follow the path taken by packages starting at the point of manufacture, through filling, processing, warehouse, and distribution, all the way to the consumer. Draw this pathway as a flow chart and identify where defects are first detected. The cause is often just upstream

Table 2. Nondestructive On-line Testing Methods for Packages

Method	Nondestructive	Application
1. Air-leak testing	Yes	Empty rigid and flexible containers and sealed packages
2. Biotesting	No	Recommended only for testing new package designs
3. Burst testing	No	Heat seals of flexible and semirigid packages
4. Chemical etching	No	Only a laboratory method for samples
5. Compression testing	Yes	Sealed flexible packages
6. Distribution simulation	Yes	Simulates all modes of distribution and suitable for all types of packages
7. Dye testing	No	A laboratory test useful for locating leaks
8. Electester	Yes	Useful for detecting liquids that separate when spoiled within sealed containers
9. Electrolytic	Yes	A laboratory test useful for locating leaks in films and coatings
10. Gas-leak detection	Yes	Useful for locating leaks through seals and packaging materials
11. Incubation	No	Most useful following simulated abuse and biotesting
12. Light	Yes	Empty formed packages may be examined at high speed
13. Machine vision	Yes	Many commercial devices
14. Proximity tester	Yes	Useful for measuring deflection of metal jar lids, and films containing metal foils drawn down by vacuum on semirigid packages
15. Seam scope	No	Useful for visually observing the overlap between double-seams and the distribution of sealing compound
16. Sound	Yes	Many commercial devices
17. Tensile testing	No	A laboratory method
18. Vacuum testing	Yes	Both empty and sealed packages
19. Visual inspection	Yes	Most common method

from this point. Go to that location and observe for the occurrence of defects on the packages. Proceed upstream until defects are no longer detected. Search for actions that contact the package at the point where defects commonly appear.

Fifth, determine what physical action might form each defect. This is easier to visualize if you are able to locate the source of the defects and observe their formation during production or handling. There may be more than one cause for the same defect, and some defects may be nothing more than different stages of the same defect. Use normal packages to try to reproduce the defects to verify the possible causes of damage. Often testing in a packaging laboratory can help to verify damage mechanisms. Refer to Table 1 to select the appropriate test method for your package defect.

Sixth, conduct validation testing of the method to determine the threshold sensitivity for small holes. Some test methods may be used online in a nondestructive manner.

NONDESTRUCTIVE TESTING METHODS

Most package testing methods may be automated for laboratory testing or for use in manufacturing. The ideal testing method will be nondestructive and fast enough to be performed on the production line. Online nondestructive testing provides the opportunity to individually test packages for hermetic integrity. Table 2 lists some current applications and limitations of on-line nondestructive test methods for packages.

Many of the online nondestructive testing methods available today use sensors that do not contact the package. Examples include light leak detectors, pressure-differential sensors, proximity detectors, and sound and machine vision systems. The ability to perform nondestructive testing to packages using other methods that contact packages is limited by the design of fixturing capable of coupling the package to the sensor at production line speeds

BIBLIOGRAPHY

General References

AOAC/FDA, “Classification of Visible Can Defects (Exterior)” in *Bacteriological Analytical Manual*, 6th edition, Food and Drug Administration/Association of Official Analytical Chemists, Arlington, VA, 1984.

AOAC/FDA, “Examination of Flexible and Semirigid Packages for Integrity” in *Bacteriological Analytical Manual*, 7th edition, Food and Drug Administration/Association of Official Analytical Chemists, Arlington, VA, 1992.

FPI, *Canned Foods: Principles of Thermal Process Control, Acidification, and Container Closure Evaluation*, Food Processors Institute, Washington, DC, 1988.

NFPA, *Flexible Package Integrity Bulletin*, Bulletin 41-L, National Food Processors Association, Washington, DC, 1989.

J. A. G. Rees and J. Bettison, *Processing and Packaging of Heat Preserved Foods*, Van Nostrand Reinhold, New York, 1990.

LIFE-CYCLE ASSESSMENT

William E. Franklin
Terrie K. Boguski
Paul Fry
Franklin Associates, Ltd.
Prairie Village, Kansas

Consumer product companies are facing new challenges in the packaging arena today. The packaging they use must be attractive, keep the product fresh and usable, and provide for the safety of users by being tamper resistant, childproof, or unbreakable. Now, packaging must also be environmentally friendly. Although it is more difficult to claim environmental friendliness than it used to be, the environmental effect of packaging materials is a primary area of concern for many companies. *Life-cycle assessment* (LCA) is a tool that can be used to address this concern by evaluating the potential environmental effects of packaging options. LCA can show companies whether a packaging change is likely to cause more or less environmental burdens than what is in current use.

LCA DEFINED

Life-cycle assessment is the quantitative determination of the resource and energy use as well as the environmental burdens of a given product or process over its entire life cycle. It is often called a “cradle to grave” analysis, because it takes into account the resource and energy use, and the environmental burdens of a given product or package system from the cradle (raw-material acquisition) to the grave (final disposal by the consumer). Life-cycle assessments are generally comparative in nature. Typically, there is a comparison of one or more products or packages that provide the same functional use. The benefit that LCAs provide is that they look beyond the resource and environmental burdens of the immediate production and disposal of the product or package being studied. This is done by including the indirect effects caused by the production processes leading up to the final product or packages. Some of these indirect effects are the mining of raw materials, the energy and emissions resulting from transportation, and the energy and emissions associated with the production of electricity. These added “indirect” effects often result in substantial added environmental burdens of a product.

The first life-cycle study was done on packaging (in 1970), and packaging has been the focus of a high percentage of the LCAs that have been conducted since then. The use of LCAs in this industry has continued to increase over the past 5 years, even as broader uses of LCA are growing in importance. Typically, LCA is viewed as an environmental management tool. More specifically, it has been used as a green design tool, especially in the packaging industry. “Green design” is defined as a product or package design that is compatible with environmental goals.

PACKAGING CHOICES: CHOOSING OPTIMAL SIZE BASED ON ENVIRONMENTAL EVALUATION

For example, a beverage bottler may want to determine what bottle size produces the least environmental burdens for delivery of an equivalent amount of beverage to their customer. The choices in this example are 1-, 2-, or 3-L polyethylene terephthalate (PET) bottles. Each bottle requires the manufacture of a cap, a thin PET bottle wall and bottom, and a thicker bottle neck. The manufacture of the bottle neck and cap requires substantially more resources than the manufacture of the thin PET bottle wall and bottom. All three bottles use the same sized cap. A logical review of these choices may lead one to believe that the 3-L bottle would be the optimum choice. This would seem to be an obvious conclusion because the delivery of 6L of beverage requires six 1-L bottles, three 2-L bottles, or two 3-L bottles and the manufacture of their associated caps and necks (putting them on an equivalent basis). Thus, one would assume that the 3-L bottle would deliver the desired quantity of the beverage with relatively smaller environmental burdens. As expected, the 2-L bottle uses less energy and produces less emissions to the air, water, and land than does the 1-L because of the reduced number of bottle tops manufactured. However, this same logic does not hold for the 3-L bottle. As an LCA would indicate, the 3-L bottle, because it holds larger quantities of liquid, requires a greater rigidity and wall thickness than do the 1- and 2-L sizes. This extra requirement is enough to make the environmental burdens of the 3-L bottle equivalent to that of the 2-L bottle (1). This is illustrated in Figure 1, 2, which show the energy and solid-waste totals generated by a computer model for the delivery of an equivalent quantity of soft drink. Figure 1 shows the total energy usage for the three soft-drink container sizes. The graph illustrates the extra energy necessary for the 1-L bottle and shows that this same advantage between the 2- and 3-L bottles does not exist. This same relationship holds for solid-waste totals, which are illustrated in Figure 2.

So, in actuality, the optimal beverage delivery size is either the 2- or 3-L sizes, and not the 3-L, as logic would indicate. This is not to say that the 1-L bottle is without merit; in fact, all three sizes are strong in the marketplace. For example, the 1-L (or smaller) container is an individual serving size. As this example shows, the value of an LCA is that it takes into account the products entire life cycle, and it provides a comparison with the other packaging options. Often, this cradle-to-grave comparison provides results that are contrary to common opinion.

USES OF LCA

Although LCA is now a tool for green design, its uses have continued to extend into other applications. The areas of LCA usage can be broken down into the following four basic categories: (a) environmental management, (b) ecolabeling, (c) regulatory purposes, and (d) information and education (2–4). The first category is using LCAs as an environmental management tool for internal use within an industry and/or company. Some of these uses include product design (more specifically green design), assistance in meeting ISO 14000 guidelines, and cost effectiveness. The second category of LCA uses also has economic implications, and that is for ecolabeling. Typically, ecolabeling may be used to sway public opinion regarding a product or give environment sanction to a product based on some stated criteria. The label can sway public opinion to increase market share. Ecolabeling based on LCA principles is a very active concept in Europe. However, the ecolabeling approach is fraught with complexities that are not resolved. In the United States, LCA is not viewed widely as a public policy tool for

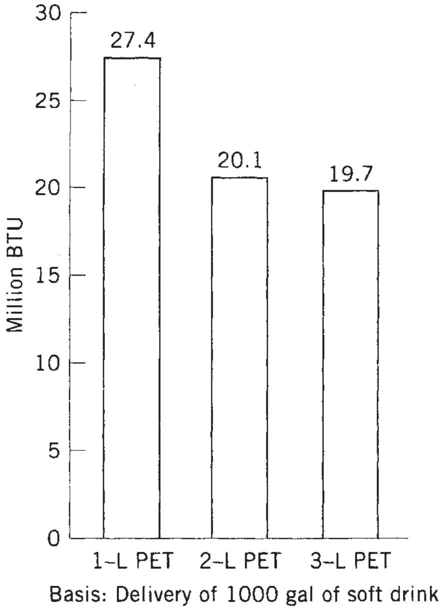

Figure 1. Energy requirement for PET soft-drink containers.

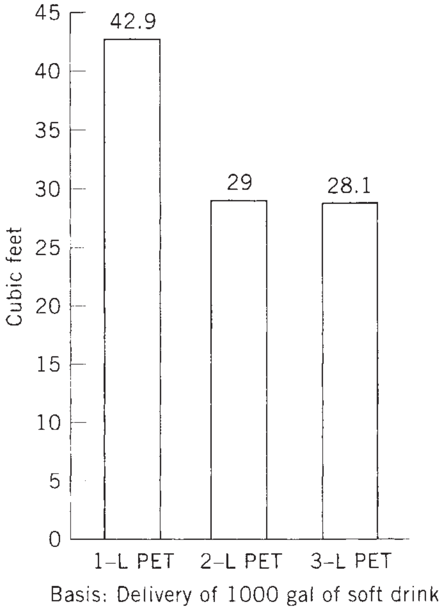

Figure 2. Solid waste for PET soft-drink containers.

labeling or for environmentally preferable products or packages. Nonetheless, this type of initiative is a proposal under public review.

The third category of LCA uses is providing information for regulatory purposes. Both the U.S. Food and Drug Administration (FDA) and the Environmental Protection Agency (EPA) are requiring more environmental information when applying for product approval. For example, applications to the FDA for approval of new packaging that will be in contact with food now require information on the environmental consequences of the new packaging. This information must include a comparison of the new packaging with the packaging it will replace or compete with. This additional information is typically outlined well by an LCA.

The final category of LCA uses is also for information and education. This includes providing information that will be used internally to educate the members of an industry of the extent and complexity of a products production. This same information can be used externally to educate the public or regulatory agencies about an identified product. All of these uses show that LCA utility extends beyond the world of environmental applications. As its utility continues to expand, knowledge of LCA becomes more and more important for those involved in the packaging industry.

LCA COMPONENTS

The LCA can be broken down into four major components: goal definition and scoping, life-cycle inventory (LCI), impact assessment (now defined as inventory interpretation), and improvement assessment (2, 3). To this date, most life-cycle studies have included life-cycle inventories and some improvement assessment. There has been limited success in completing impact assessments because of the lack of quality data and a consistent, accepted methodology.

Goal Definition and Scoping. "Goal definition and scoping" is the task of identifying the purpose and basis of the study. The purpose of the study should be a clear and unambiguous statement of why the study is being pursued. This statement helps to define the system and the processes within the system that need to be analyzed. The "system" under study is defined in the same manner as it is defined in classic thermodynamics.

Thermodynamics breaks a process down into two components: the system and the surrounding environment. The surrounding environment acts as a source of all inputs and a "sink" for all outputs. The description of the system is a description of all flows that go across the system's boundaries. For example, the surroundings provide the raw materials for the system that enters across the boundaries. Conversely, all air, water, and solid-waste emissions along with the desired product cross the boundaries into the surroundings. This is illustrated in Figure 3. Thus, an LCA takes into account all materials and energy that cross or are held within the system.

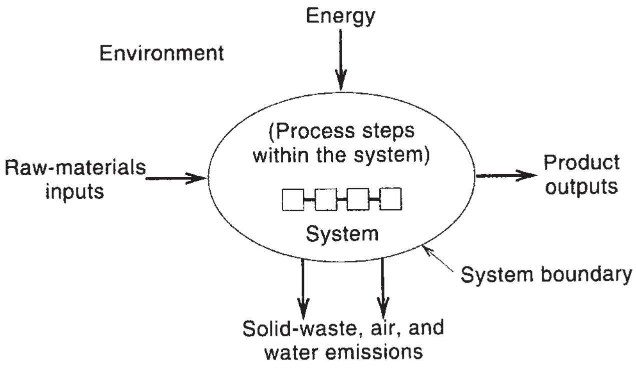

Figure 3. Definition of system in LCA.

The boundaries for an LCA include the acquisition of raw materials, manufacture of intermediate materials and final product, use of product, and final disposition of the product. Also included in the boundaries are any use, reuse, or recycling that occurs; the energy and emissions for each processing step; the energy and emissions to transport from one step to the next; and any energy and emissions necessary to process energy sources into usable fuels. The energy and emissions from extracting the fuels that are consumed often contribute significantly to the LCA results. Therefore, the fuel extraction steps, which include spills and losses, should be included with the data for fuel combustion. In fact, relatively simple flow diagrams such as Figure 3 turn into a complex network of processes when an actual product or package is evaluated. Also, whether the product or package is reusable can be an important consideration. A good example is a reusable glass or ceramic cup. Each reuse requires the washing of the cup with hot water and detergent. Over the lifetime of a cup, it may be washed hundreds of times or it may break and thus have a short life. The burdens from the generation of the hot water and detergent for the reuse of the cup could outweigh the burdens from the generation of the cup from raw materials. In other words, the reuse cycle may create unanticipated burdens compared with a single-use item such as a paper or plastic cup.

One of the most important parts of defining the scope and boundaries of a study is the definition of the functional unit. This identifies the unit of product that is going to be studied and compared. Some examples are the unit surface area covered by paint, the packaging used to deliver a given volume of beverage, or the amount of detergent used for a standard household wash (2). So with these boundary definitions, the product under study is examined from cradle (raw-material acquisition) to grave (final disposition of the product).

Life-Cycle Inventory. The boundaries and scope provide direction into completion of LCA. The LCI is the next stage of the LCA and is the most frequently used and best developed stage. The LCI is often used separately from the other components of the LCA, because the inventory portion of the LCA is more clearly defined. This clearer definition is because the methodology of LCI is based on scientific principles. LCI is essentially based on the law of conservation of mass, the conservation of energy, and thermodynamic definitions of systems. Using these scientific principles, the basis of LCIs can be developed and applied consistently with each LCI regardless of the product analyzed. The LCI consists of seven unique steps: (a) definition of scope and boundaries, (b) identification of unit operations, (c) development of systems and network diagrams, (d) data gathering, (e) creation of a computer model, (f) analysis and reporting of study results, and (g) the interpretation of results leading to specific conclusions.

The definition of scope and boundaries is directed by the scope and boundaries identified by the full LCA. If the LCI is used separately from an LCA, then the scope and boundaries for the LCI need to be defined in a similar manner as was described for the full LCA.

Once the functional unit and the system to be studied are identified, the system must be broken down into individual unit operations from the beginning to the end of the life cycle. This process serves as a blueprint for the process of gathering data (5). For example, to make ethylene from petroleum, each step in the life cycle, from the drilling of crude oil and natural gas, to producing ethylene, needs to be broken down into discrete steps. For each of these discrete steps, a system boundary must be identified, with all the inputs and outputs that cross the boundaries identified as well. For the preceding example, the process of making ethylene would include the inputs of natural gas and/or naphtha as raw materials and energy resources (6). Outputs would include ethylene, propylene, and butenes (coproducts), air, water, and solid-waste emissions to the environment. This process as part of the whole life cycle is shown in Figure 4. Once the inputs and outputs for each individual process are identified in this manner, the entire process is linked according to the functional unit defined in the scope of the study. The difficulty lies in obtaining the data for each individual step within the life cycle.

Data gathering is a resource-consuming process, but its importance cannot be overemphasized. The entire LCI/LCA is dependent on the quality of the data gathered. Each unit operation should have a complete breakdown of all inputs and outputs, both material and energy. With the advent of computer technology, the quantity of data used and the accuracy and complexity of LCIs that can be undertaken have increased tremendously. With the use of spreadsheets or computer programs, the air, water, and solid-waste emissions, as well as the energy usage for each individual unit operation, can be totaled with respect to the functional unit selected in the scoping of the project. The computer model can then be modified to determine how changes in the functional unit, or the process conditions, will affect the overall results. For example, the delivery of peanuts could have two packaging alternatives: a glass jar or a composite aluminum and plastic bag. Once the two packaging alternatives are put on an equivalent basis, an LCA can identify the environmental burdens and resource consumption for each packaging alternative. From the LCA comparisons of the two packages, a choice can be made as to which of the two alternatives produces the least potential environmental burden.

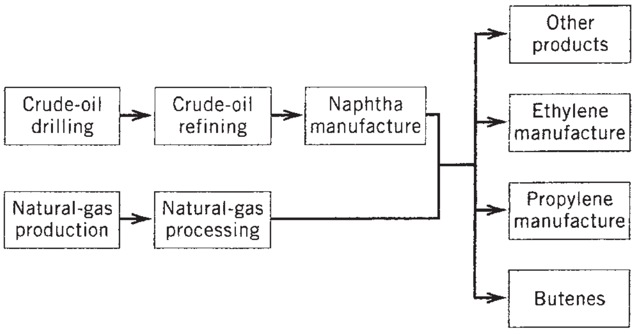

Figure 4. Steps in the production of ethylene.

Various LCI software packages are available to companies that do not wish to collect data or develop their own computer models. One such software package is REPAQ (trademark), which was developed specifically for screening packaging options. With the availability of LCI software such as REPAQ, the packaging engineer can now determine how modifications in packaging systems (shape, size, weight, and composition) can change the overall outcome of the LCI results (7). Figures 5–7 illustrate a partial output from REPAQ. The figures illustrate the comparative solid waste, atmospheric emissions, and energy usage of the jar and the bag from the example above. A typical computer output will consist of a comparative listing of 20–30 atmospheric emissions, 20–30 waterborne emissions, and a breakdown of solid waste and energy. The advantage of computer modeling that is the size, weight, and compositions of the two options can be modified, or secondary packaging can be added or removed, and the graphic summary will give immediate feedback on how the LCI results would change. With this type of information, a packaging system that helps meet environmental goals can be designed quickly.

IMPACT ASSESSMENT (INVENTORY ASSESSMENT)

The life-cycle inventory provides a great deal of information about the energy use and emissions associated with the life cycle of a given product. This information, however, cannot be generally applied to the product's effect on human health, ecological quality, and natural resource depletion. This is simply because one pound of a given emission may provide substantially different effects on human health or the environment than a pound of a different emission. Impact-assessment methodology helps to categorize the LCI information into sets of common impact measures, such as increased mortality, habitat destruction, or global warming, which allow the interpretation of the total environmental effects of the system being evaluated (8).

According to the definition of impact assessment put forth by SETAC and the U.S. EPA, the impact assessment can be broken down into three steps: classification, characterization, and valuation (2, 3, 9). *Classification* is the process of assigning the initial aggregation of LCI data

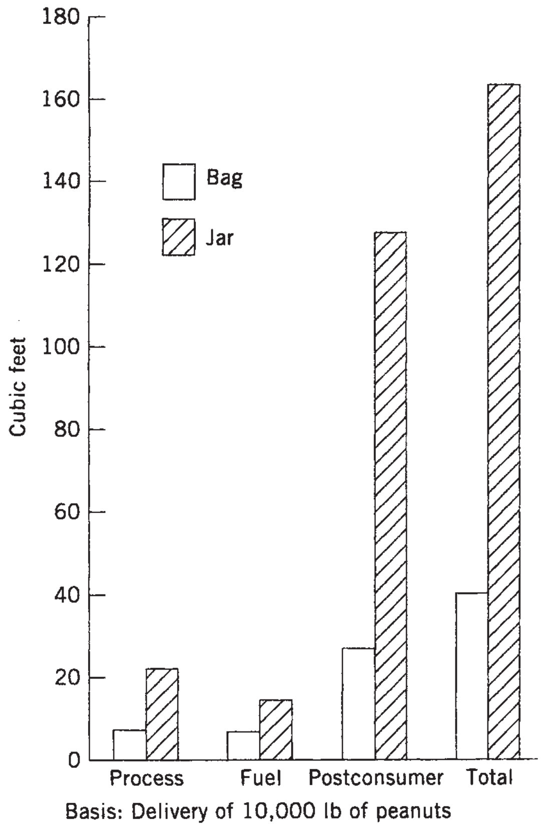

Figure 5. REPAQ comparison of solid waste.

into relatively homogenous impact groups. There are four general impact categories: environmental or ecosystem quality, quality of human life (including health), natural resource use, and social welfare. These categories are then broken down into even more specific impact groups. Two examples of these groups are global warming and ozone depletion. Each emission outlined in the inventory is placed into one or more of these impact groups. The selection of impact groups is somewhat related to what emissions are being released by the systems under consideration. The selection process is twofold, with the analyst first asking: “What environmental problems could these emissions potentially cause?” The second question the analyst asks is: “What environmental impacts are important or of interest to the audience of the study?” Answering both questions results in a comprehensive list of impact groups to evaluate.

Once the inventory emissions are classified into impact groups, the process of characterization begins. *Characterization* is the selection of the actual or surrogate characteristics to describe impacts. For example, acid equivalents could be used to characterize emissions classified as having acid-rain potential. This provides an assessment of the relative magnitude of the given impact on the more general categories such as human health. The difficulty in the characterization process comes with the fact that scientific factors have not been developed for all the impact categories, and thus coming up with a common descriptor for each group is subjective at best.

The third and final step of impact assessment is *valuation*, which is the assignment of relative values or weights to different impacts. This step essentially allows for the evaluation of the different emissions across all impact groups. With this composite information, decision makers can then decide the total impacts of a product system. Valuation is extremely subjective and is dependent on the value system of those assigning relative weights to the impact groups.

Beyond the classification step, impact assessment quickly becomes subjective and value laden. The lack of a well-accepted and nonsubjective model for impact assessment limits its applicability to industry. However, development of nonsubjective models, or models that limit subjectivity, is ongoing.

IMPROVEMENT ASSESSMENT

Similar to impact assessment, improvement assessment has not undergone the consensus examination of the methodology that life-cycle inventory has undergone. However, improvement assessment based on life-cycle inventories is common practice. The purpose of the improvement assessment is threefold: (a) it evaluates LCA results for their relevance to the predetermined LCA goals and objectives, and it identifies opportunities for reducing the environmental impacts of a product system; (b) it translates all results and their determined importance to the LCA audience in a clear and concise manner; and (c) it uses

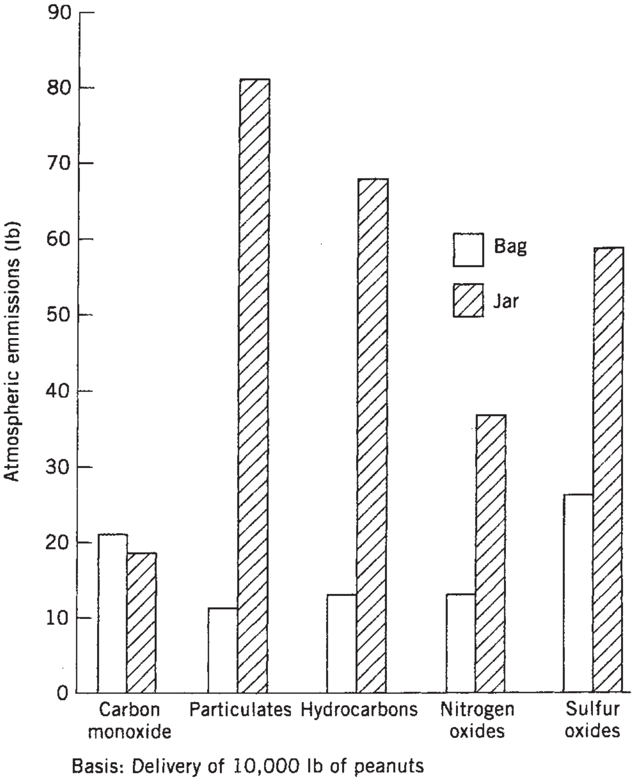

Figure 6. REPAQ comparison of atmospheric emissions.

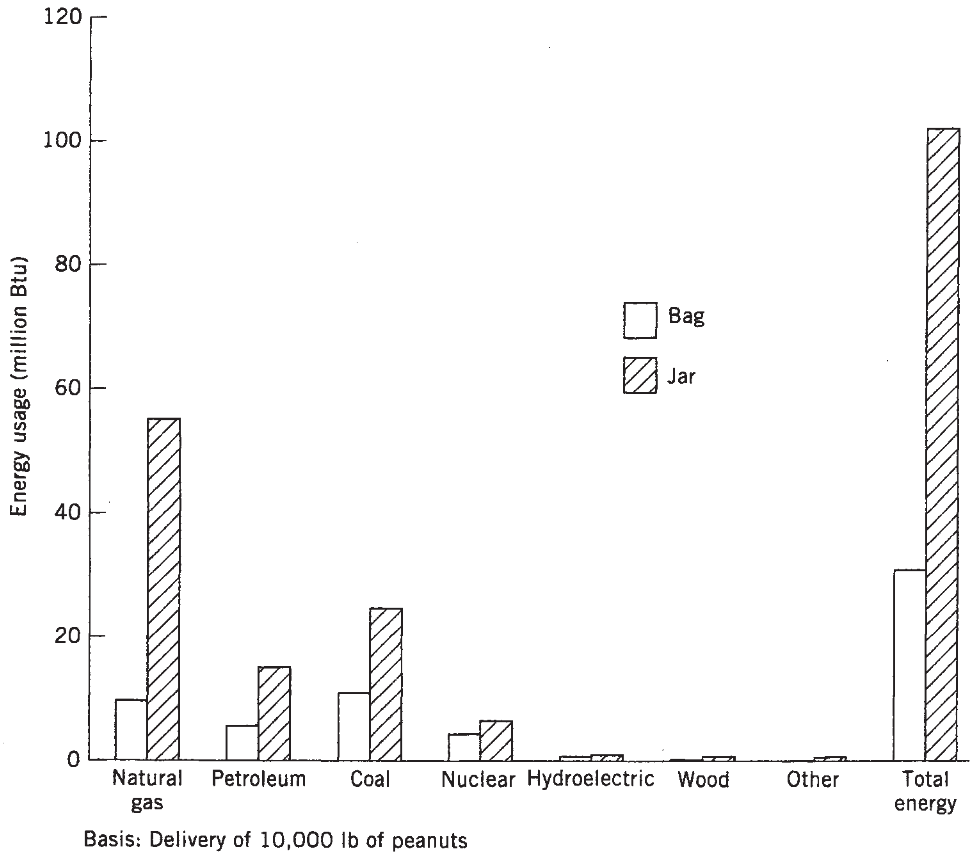

Figure 7. REPAQ comparison of energy usage.

the impact assessment or the LCI as a baseline to determine the effect, if any, of the instituted improvements.

Improvement assessment identifies and evaluates any opportunities for reducing environmental burdens. These opportunities may be uncovered by the inventory portion of the LCA by identifying areas of large energy usage or environmental emissions. The improvement assessment can then identify those areas where increased efficiency or modifications would be appropriate. Figure 8 is a table of some areas for improved efficiency that could be identified in an improvement assessment. The packaging of over-the-counter (OTC) medication is used for this example. The package components are listed in the first column, and possible modifications to the package system are listed in the top row. With this sort of grid, possible improvements can be assessed. For example, could some of the packaging, such as the paperboard box, be eliminated? Instead of packaging the bottle in a box, the bottle could be placed directly on the shelf. Could the packaging makeup be changed by using recycled content, making it lighter, or making it from a different resin? Could the package or the product be redesigned? For example, could the bottle be filled more, or could some filler be removed from the product? Each of these options can be reviewed to see how modification would affect the environmental burdens of the packaging as a whole.

Similarly, the improvement assessment can use information provided by the impact assessment. This information takes the inventory results one step further by identifying not only the quantities of energy used and environmental

	Eliminate packaging	Recycled content	Lightweight material	Material substitution	Redesign packaging	Redesign product
Paperboard box						
HDPE bottle						
Polypropylene cap						
Corrugated container						

Figure 8. Improvement options for packaging a consumer product.

emissions but also their potential impacts. The improvement assessment takes the inventory and impact information and condenses it to a few clear and concise conclusions. These conclusions drive the process or product change that will result in reducing the environmental impact of the system being studied. Once these changes are made, the impact and inventory portions of the LCA can be used as a baseline to determine the effects of any improvements made to the system.

LIMITATIONS OF LCA

Beyond the obvious limitations of the lack of consensus for impact and improvement assessments methodologies, LCAs do have limitations. Often LCA results—or, more specifically, LCI results—are extrapolated beyond what is supported by the study. Most studies have specific parameters that describe a given comparison. These parameters can include weight of the product, delivery of a quantity of useful product, time period, and specific location of the comparison. If any of these parameters are changed, then the relative comparison may or may not be accurate. Thus, the study results are limited to the specific study conditions. Second, there has been a desire to use LCAs as public policy instruments to determine whether a specific material or product is "good" or "bad" for the environment. Although LCAs and LCIs provide a foundation of useful information on resource usage, environmental emissions, and potential impacts, they do not quantify all environmental consequences of a product or process. Thus, LCA is an effective tool for evaluating environmental tradeoffs and consequences of specific actions. It is not a tool for measuring the magnitude of environmental "goodness" for specific materials or products. As processes and products change, their LCA profile also changes relative to other alternative processes and products.

Life-cycle assessments have been used by the packaging industry for 25 years to help meet both financial and environmental goals. They provide a strong basis for making design decisions as well as environmental planning. As the applications and knowledge of LCAs continue to grow, the value to the packaging industry will continue to grow as well.

BIBLIOGRAPHY

1. V. R. Sellers and J. D. Sellers, *Comparative Energy and Environmental Impacts for Soft Drink Delivery Systems*, Franklin Associates, Ltd, Prane Village, KS, 1989.
2. Society of Environmental Toxicology and Chemistry, *A Technical Framework for Life-Cycle Assessments*, workshop report for Society of Environmental Toxicology and Chemistry, Aug. 1990; Society of Environmental Toxicology and Chemistry and SETAC Foundation for Environmental Education, Inc., Washington, DC, 1991.
3. Society of Environmental Toxicology and Chemistry, "Guidelines for Life-Cycle Assessment: A 'Code of Practice," from the SETAC Workshop held at Sesimbra, Portugal, Mar. 31–Apr. 3, 1993, Society of Environmental Toxicology and Chemistry (SETAC), 1993.
4. The Nordic Council, *Product Life Cycle Assessment, Principles and Methodology*, Nordic Council of Ministers, Copenhagen, Denmark, 1992.
5. T. K. Boguski, R. G. Hunt, J. M. Cholakis, and W. E. Franklin, "Environmental Life Cycle Assessment," in M. A. Curran, ed., *LCA Methodology*, McGraw-Hill, New York, 1996.
6. I. Bousted, *Eco-balance, Methodology for Commodity Thermoplastics. A Report for The European Center for Plastics in the Environment*, Brussels, Dec. 1992.
7. *REPAQ (trademark): A Software Package Designed to Evaluate and Design Optimum Packaging Alternatives*, Franklin Associates, Ltd., Prairie Village, KS.
8. Franklin Associates, Ltd., *Life Cycle Assessment of Ethylene Glycol and Propylene Glycol Based Antifreeze*, Prarie Village, KS, 1994.
9. U.S. Environmental Protection Agency, *Life-Cycle Impact Assessment: A Conceptual Framework, Key Issues, and Summary of Existing Methods*, EPA-452/R-95-002, July 1995.

General References

T. K. Boguski, R. G. Hunt, and W. E. Franklin, "General Mathematical Models for LCI Recycling," *Resource, Conserv. Recycl.* **12**, 147–163 (1994).

T. Boguski, J. Wood, R. Hunt, and W. Franklin, *Life Cycle Analysis and Green Design*, Franklin Associates, Ltd., Prairie Village, KS.

R. Hunt, J. Sellers, and W. Franklin, "Resource and Environmental Profile Analysis: A Life Cycle Environmental Assessment for Products and Procedures," *Environ. Impact Assess. Rev.* (Spring 1992).

LIGHT PROTECTION FROM PACKAGING

Thomas Eie*
Matforsk AS, Norwegian Food
Research Institute, Aas,
Norway; and Department of
Chemistry, Biotechnology, and
Food Science, Norwegian
University of Life Sciences, Aas,
Norway

WHAT IS LIGHT?

According to the electromagnetic wave theory, visible light is the small portion of electromagnetic energy with wavelengths between 380 and 770 nm that our eyes are sensitive to. The sensitivity of the human eyes depends very much on the wavelength of the light. Highest sensitivity is found in the green/yellow area peaking at 555 nm. At 400 and 750 nm the sensitivity is about 10,000 times lower than at 555 nm. Ultraviolet (UV) light is the portion of electromagnetic energy with wavelengths between 100 and 400 nm. This short-waved and energy-richer light can be divided into three bands according to their

---

* *Present position*: Senior Packaging Developer, Bama Industri AS, Lier, Norway.

biological effects: UV-C (100–280 nm), UV-B (280–315 nm), and UV-A (315–400 nm). Infrared light is the band between 770 and 1,000,000 nm. It contains the least amount of energy per photon of any other band (1).

Traditionally, light has been measured in lumen (lm) or lux (lm/m^2) by a lux meter. Lumen is the light flux through 1 m^2 of the surface of a globe with a 1-m radius with a light source of 1 candela in the center. One candela is roughly the light from one common candle and has been defined as 1/60 of the light from 1 cm^2 of the surface of a black object at 1773°C (temperature of freezing platinum). The wavelength chosen for definition of candela is 555 nm, the same wavelength to which the human eye is most sensitive (2). This means that the readings from a lux meter are strongly correlated to the sensitivity of the human eye, giving high response to green and yellow light and poor response to blue and red light. This may be very useful for measuring light related to human vision, but not useful for measuring light correlated to food photooxidation. In such cases a spectroradiometer is more relevant. This instrument measures the spectral power distribution of light in W/m^2 for each nanometer wavelength.

SUNLIGHT AND ARTIFICIAL LIGHT

Figure 1 shows the irradiation from the sun, measured on a clear winter day at 59°N, and from two common artificial light sources, a halogen lamp, and a warm-white fluorescent tube. While the sun and the halogen lamp emit energy in the whole visible region of the spectrum (although the energy emission is small in the blue part of the spectrum), the emission from the fluorescent tube is characterized by uncontiguous peaks of energy with a pattern typical for each type of tube. The visible light energy (380–770 nm) emitted from the sun is 16.6 times stronger than the visible light measures 30 cm from the fluorescent tube. The light energy from the halogen lamp is 2.3 times stronger than the fluorescent tube.

According to the Inverse Square Law defining the relationship between the irradiance from a point source and distance, the intensity varies in inverse proportion to the square of the distance (1). If the irradiance is 1.6 W/m^2 at 15 cm, the irradiance will be, for example, 0.4 W/m^2 at 30 cm and 0.04 W/m^2 at 100 cm.

THE EFFECT OF LIGHT ON FOOD

The effect of light on the sensory and nutritional stability of food can be explained by both photolytic oxidation (production of free radicals primarily from lipids during exposure to light) and photosensitized oxidation (3). Photosensitized oxidation begins with the absorption of light by special biomolecules, called photosensitizers, that are able to absorb light to elicit a specific response (4). Examples of photosensitizers in food are chlorophylls, pheophytins, porphyrines, riboflavin, myoglobin, and synthetic colorants (5). As light energy is absorbed, an electron is boosted to a higher energy level and the sensitizer becomes unstable. Only a few picoseconds are required for a chlorophyll molecule to absorb energy and be transformed into a singlet-excited state (3).

In the presence of oxygen, two competing reactions of the excited sensitizer can occur, called Type I and Type II reactions. In Type I reactions the excited sensitizer may react directly with a substrate forming radicals or radical ions, resulting in oxygenated products. In Type II reactions the excited photosensitizer may react with ground-state oxygen to form singlet oxygen that is very reactive, causing a variety of oxidation processes (6).

Important characteristics for photosensitizers are their molar extinction coefficient curves, indicating how much energy the molecule is able to absorb at each wavelength, and their absorption peaks. By comparing the molar extinction curves for riboflavin (vitamin B2), β-carotene, chlorophyll *b*, and octaethylporphyrin (7), it becomes evident that many of these photosensitizers absorb most of their energy up to ~500 nm (blue-blue/green area of the spectrum), indicating the potential harmfulness of this light. Chlorophyll b has, in addition, an absorption peak in the 630-nm region (red light) and the porphyrin has some

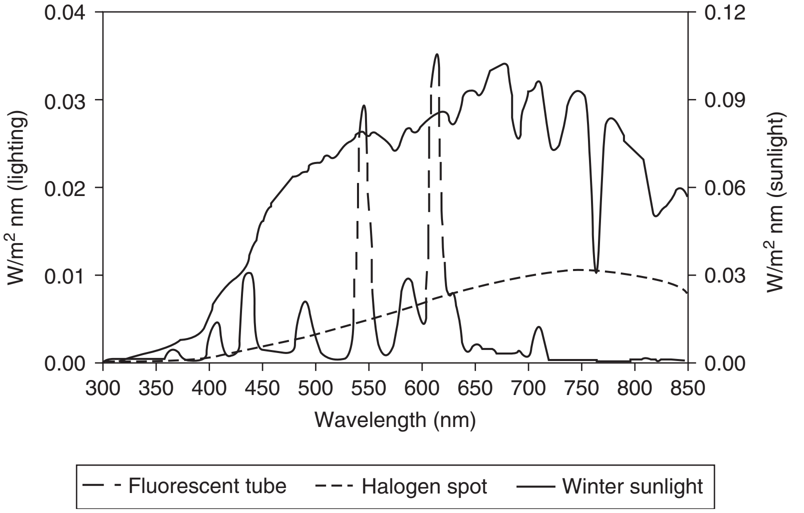

Figure 1. Energy distribution from the sun (measured 12 December 2007 11:55 at N59 39.945 E10 45.440), from a warm-white fluorescent tube (Osram L 58W/830 Lumilux Warm White) and a 12-V 20-W Ikea halogen lamp (both measured at a 15-cm distance). Measurements performed using an Apogee spectroradiometer (Apogee Instruments Inc., Logan, UT).

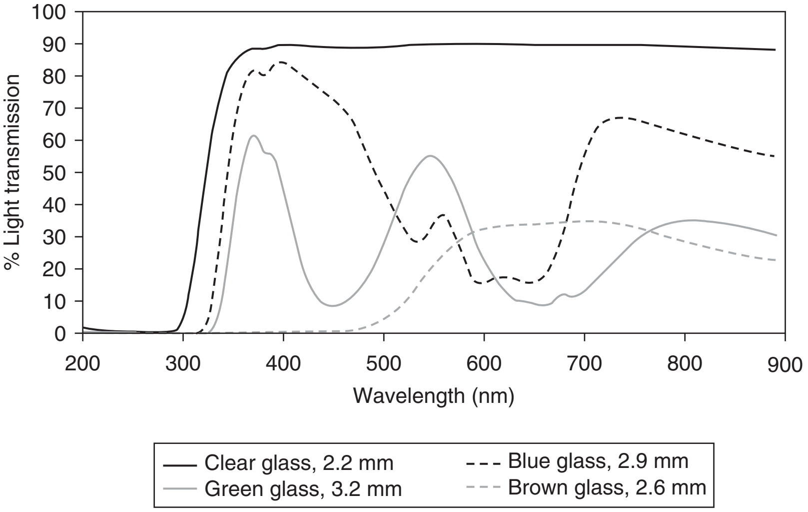

Figure 2. Light transmission in clear, blue, green, and brown glass as measured by a Perkin Elmer Lambda 800 UV–vis spectrometer with an integrating sphere (Perkin Elmer Ltd., Buckinghamshire, UK).

smaller absorption peaks in the 500- to 580-nm region (green and yellow light). While riboflavin is often identified as the major photosensitizer in food causing photooxidation (8), this compound has a 10- to 15-fold lower molar extinction peaks than the other three mentioned photosensitizers. Recent research (9, 10) has clearly demonstrated the importance of natural contents of porphyrins and chlorophyll-like compounds as powerful photosensitizers in dairy products.

Oxidative changes in food are important in terms of the nutritional quality, palatability, and even toxicity of our food supply (11). Riboflavin-photosensitized oxidation causes destruction of vitamin A, vitamin C, vitamin D, and vitamin E (12).

LIGHT PROTECTION BY PACKAGING MATERIALS

When sunlight, which represents a complete spectrum in the visible light region, reaches the surface of a piece of colored, transparent material, some light is reflected, some light is transmitted, and the rest is absorbed. The amount of energy transmitted in each part of the spectrum, the availability of oxygen (13) and the type and concentration of photosensitizers will determine the degree and character of the photooxidative degradation of the food product.

The importance of the optical properties of packaging materials is often underestimated, and little attention is generally given to the shelf life of light-sensitive food products (14). Today, consumers are demanding transparent packing, to better appraise the product prior to purchase. Furthermore, environmental concerns have caused a reduction in the use of aluminum and metallized foils. These factors have led to increased use of transparent packing materials within the entire food sector. However, packing of foods in transparent materials greatly increases the risk of light-induced oxidation (15).

Some packaging materials, such as tin-plated steel, aluminum (also foils), and thick fiber boards (e.g. corrugated boards and solid boards), are practically impermeable to light and thus offer very good protection against light. Materials that to varying degree offer light protection are discussed below.

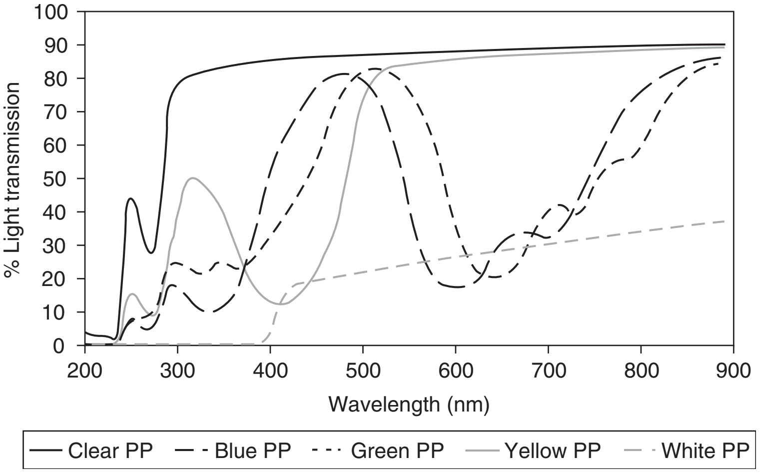

Figure 3. Light transmission in clear, blue, green, yellow, and white injection molded polypropylene lids as measured by a Perkin Elmer Lambda 800 UV–vis spectrometer with an integrating sphere (Perkin Elmer Ltd., Buckinghamshire, UK).

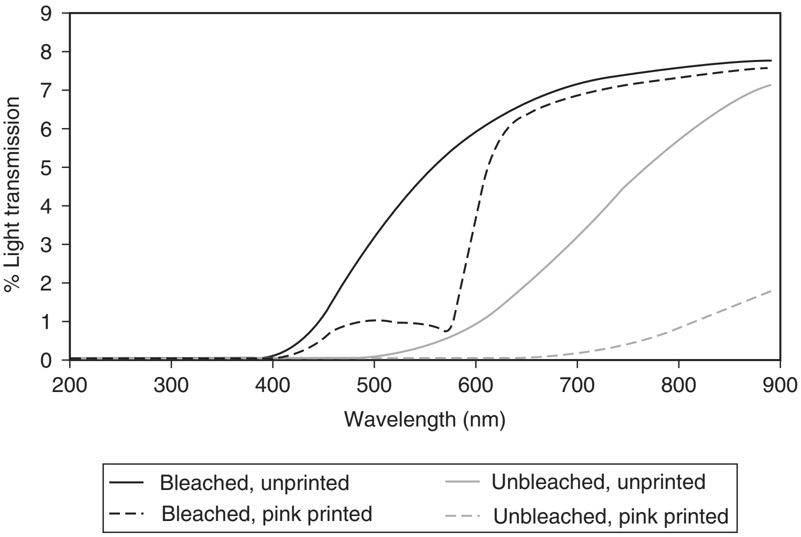

Figure 4. Light transmission in three different qualities of unprinted and pink printed liquid paperboard: bleached, unbleached, and bleached with oxygen and light barrier as measured by a Perkin Elmer Lambda 800 UV–vis spectrometer with an integrating sphere (Perkin Elmer Ltd., Buckinghamshire, UK).

Light Protection by Glass and Plastics

The light protection of glass and plastic depends on material thickness and type and concentration of pigment. Higher pigmentation will drastically reduce the light transmittance and increase the protection of the material. As shown by Figures 2 and 3, clear glass and plastic (injection molded polypropylene) transmit about 90% of the visible light and, respectively, 35% and 56% of the UV light, and they are therefore poor UV and visible light barriers. Blue glass and plastics transmit light in the UV, blue, and the red regions of the spectrum. As many photosensitizers absorb light in the UV and blue regions of the spectrum, this light is particularly harmful to many foods. Green glass and plastics transmit light in the UV, violet/blue, and green regions of the spectrum. In this area the porphyrins have some small absorption maxima, and prolonged exposure in this region may cause food deterioration.

Brown glass transmits light in the yellow, orange, and red region of the spectrum, an area where chlorophylls also have absorption maxima. However, brown glass is usually densely pigmented, offering good light protection for a variety of food products including milk and beer.

Figure 3 shows the light transmittance through an SiO_2-pigmented (white) injection-molded polypropylene plastic. Addition of this pigment results in a relative sharp cut off around 400 nm offering good protection against UV radiation. However, because normal artificial light sources used in retail normally emits only small amounts of light in the UV region (many have only a small emission peak in the 370-nm area), the transmittance of light by packaging materials in this region is not a serious threat during indoor distribution, storage and display. A limited effect is therefore achieved by adding a UV block to a transparent packaging material.

Light Protection by Liquid Paperboard

Different qualities of liquid paperboard coated with low-density polyethylene are used worldwide for packaging of fresh milk products. Figure 4 shows that despite their modest thickness (0.5–0.6 mm) commercial liquid

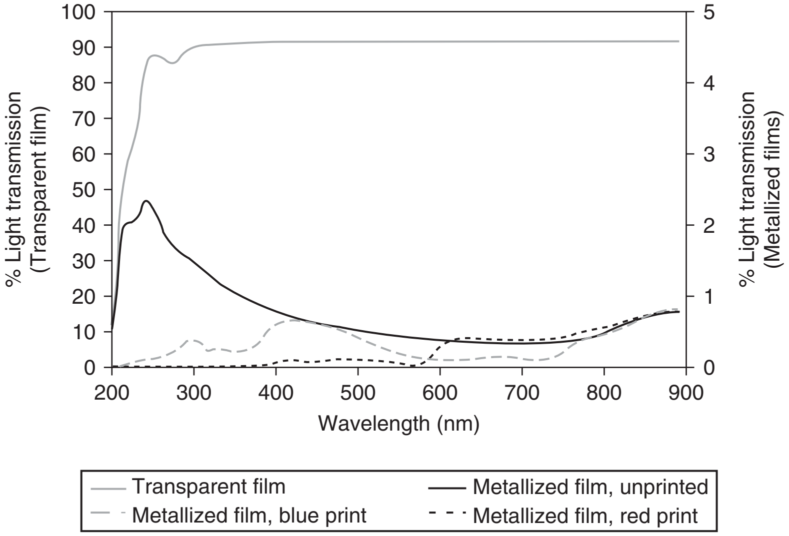

Figure 5. Light transmission in unmetallized, metallized, and printed, metallized polypropylene films as measured by a Perkin Elmer Lambda 800 UV–vis spectrometer with an integrating sphere (Perkin Elmer Ltd., Buckinghamshire, UK).

paperboard qualities offer a relatively good protection against light. Only 4.3% of the light in the visible (400–700 nm) region of the spectrum and 0.03% in the UV region are transmitted through the bleached paperboard. The unbleached board offers an even better light barrier. Only 0.8% of the visible light and 0% of the UV light is transmitted. Additional protection is achieved by printing. Only 2.6% of the light is transmitted through pink printed bleached paperboard, and most of the reduction appears in the region of the spectrum that is most detrimental to milk products—that is, up to 550 nm. Pink printed unbleached paperboard offers very good light protection. Less than 0.1% of the visible light is transmitted through this material.

If liquid paperboard is foiled with aluminum, it becomes virtually impermeable to light. Also the SiO_2/carbon black/EVOH-based light and oxygen barrier used by one supplier for certain products in some markets also offers very good light protection. Only 0.3% of the visible light is transmitted through this material (for unprinted, bleached board).

Light Protection by Metallization of Plastic Films

Metallization may be used to improve both light barrier and oxygen barrier of plastic films. As shown by Figure 5, the transmission in the visible region of the spectrum is significantly reduced from 92% for unmetallized film to 0.5% when the same film is metallized. The reduction in light transmission caused by the metallization is rather uniform in the visible area of the spectrum, similar to the effect of a heavily pigmented gray (neutral) filter. The effect of metallization is still very good in the UV region of the spectrum, but not as good as in the visible region. As for liquid paperboard, further reduction in light transmission is achieved by additional printing of the metallized film. The effect of blue print results in neglectable effect on light transmission in the blue region because blue print transmits light in the blue region of the spectrum. Similarly, the effect of red print is neglectable in the red region of the spectrum.

BIBLIOGRAPHY

1. A. Ryer, International light, Inc. web information. Available at http://www.cbpf.br/pdf/Light%20Measurement%20Handbook.pdf. Accessed June 8, 2007.
2. Wikipedia Foundation Inc, web information. Available at http://en.wikipedia.org/wiki/Candela. Accessed June 8, 2007.
3. D. G. Bradley and D. B. Min, *Crit. Rev. Food Sci. Nutr.* **31**(3), 211–236 (1992).
4. S. K. Pushpan, S. Venkatraman, V. G. Anand, J. Sankar, D. Parmeswaran, S. Ganesan, and T. K. Chandrashekar, *Curr. Med. Chem.* **2**, 187–207 (2002).
5. D. B. Min and J. M. Boff, *Compr. Rev. Food Sci. Food Safety* **1**, 58–72 (2002).
6. C. S. Foote, *Photochem. Photobiol.* **54**(5), 659 (1991).
7. J. Lindsay, Oregon Medical Laser Company, web information. Available at *http://omlc.ogi.edu/spectra/PhotochemCAD/html/index.html*. Accessed June 8, 2007.
8. M. Bekbölet, *J. Food Prot.* **53**(5), 430–440 (1990).
9. J. P. Wold, A. Veberg, A. Nilsen, V. Iani, P. Juzenas, and J. Moan, *Int. Dairy J.* **15**, 343–353 (2005).
10. J. P. Wold, *Spectrosc. Eur.* **18**(5), 8–13 (2006).
11. M. B. Korycka-Dahl and T. Richardson, *Crit. Rev. Food Sci. Nutr.* December, 209–241 (1978).
12. E. Choe, R. M. Huang, and D. B. Min, *J. Food Sci.* **70**(1), R28–R36 (2005).
13. H. Larsen, P. Lea, and M. Rødbotten, *Food Qual. Pref.* **16**(7), 573–584 (2005).
14. L. Piergiovanni, and S. Limbo, *Packag. Technol. Sci.* **17**(3), 155–164 (2004).
15. J. P. Wold, A. Veberg, F. Lundby, A. N. Nilsen, and J. Moan, *Int. Dairy J.* **16**, 1218–1226 (2006).

LIPID OXIDATION: CHEMICAL STABILIZATION

Karen M. Schaich
Department of Food Science,
Rutgers University, New
Brunswick, New Jersey

INTRODUCTION

Packaging must provide physical, microbiological, and chemical protection for foods. For the most part, providing physical protection is straightforward, as is preventing contamination of foods after processing and packaging. More challenging is meeting the requirement for inert storage environments that inhibit respiration in fresh fruits and vegetables, microbial growth in prepared foods and raw meats, and chemical degradation in stored foods. Lipid oxidation, or oxidative rancidity, is the chemical reaction that most limits long-term shelf life of foods, producing characteristic off-odors and flavors, browning, texture changes, co-oxidation of proteins and vitamins, and even toxic products in foods. Lipid oxidation is also a major cause of deterioration in cosmetics and many personal care products, changing surface tensions, breaking emulsions, oxidizing active components, and producing off-odors. Because of these extensive effects on product quality, lipid oxidation also forces the greatest demands on food packaging.

This chapter will describe the reactions of lipid oxidation in general terms and show how packaging can be used to inhibit and control lipid oxidation. Additional details of lipid oxidation reactions, factors affecting lipid oxidation, and strategies for prevention may be found in comprehensive reviews listed at the end of the chapter.

CHARACTERISTICS OF LIPID OXIDATION

Lipid oxidation is a chemical process in which unsaturated fatty acids in phospholipids and triacylglycerides react with oxygen and degrade to a variety of volatile and nonvolatile products. Lipids oxidize by a free radical chain reaction process involving three stages: initiation, propagation and branching, and termination. The classical sequence describing lipid oxidation is shown in Figure 1, along with catalysts and protectants at each stage.

The radical chain reaction has several critical consequences for lipid oxidation:

- Once started, the reaction is self-propagating and self-accelerating; that is, it keeps itself going.
- Many more than one LOOH is formed and more than one lipid molecule is oxidized per initiating event.
- Very small amounts of pro- or antioxidants cause large rate changes.
- Multiple intermediates and products are formed, and they change with reaction conditions and time.

Unlike most chemical reactions, lipid oxidation is a dynamic process with no fixed intermediates or endpoints. That the reactions of lipid oxidation change with time and conditions presents distinct challenges in measuring and controlling lipid oxidation, and it explains in part why lipid oxidation is a major problem in storage stability of foods and other lipid-containing products.

STAGES OF LIPID OXIDATION

Initiation

$$LH \rightarrow L^\bullet \tag{1}$$

Oxygen cannot add directly to the double bonds in unsaturated fatty acids, but it adds almost instantaneously to $L^\bullet$ free radicals to form peroxyl radicals that drive radical chain reactions. Thus, lipid oxidation requires special catalysts, or initiators, to form $L^\bullet$, on carbon atoms of lipid (L) molecules. Common initiators include ultraviolet light, photosensitizers and visible light, radicals from other sources, ionizing radiation, metals, heme compounds, and heat.

Propagation

$$L_1^\bullet + O_2 \rightarrow L_1OO^\bullet \tag{2a}$$

$$L_1OO^\bullet + L_2H \rightarrow L_1OOH + L_2^\bullet \rightarrow L_2OO^\bullet \tag{2b}$$

$$L_2OO^\bullet + L_3H \longrightarrow L_2OOH + L_3^\bullet \text{ etc. } \cdots\cdots\rightarrow L_nOOH \tag{2c}$$

Propagation reactions establish the free radical chain and keep it going. In this stage, lipid alkyl radicals, $L^\bullet$, react with oxygen almost instantaneously to form peroxyl radicals, $LOO^\bullet$, that are major players in lipid oxidation. Peroxyl radicals very selectively abstract hydrogens from adjacent lipid molecules, forming hydroperoxides and generating new $L^\bullet$ radicals in the process. Each new $L^\bullet$ radical in turn repeats the process to provide the driving force in the chain reaction. Chain propagation continues indefinitely until no hydrogen source is available or the chain is intercepted.

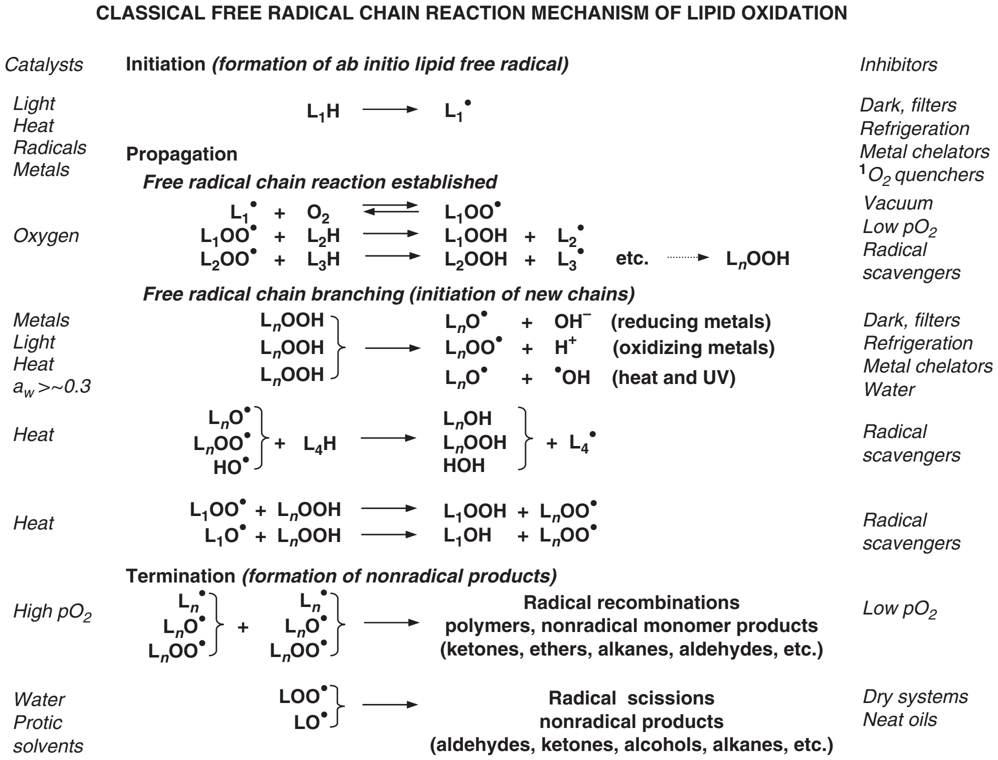

Figure 1. The stages and individual reactions involved in lipid oxidation as described by the classical free radical chain reaction, and the catalysts and inhibitors associated with each stage.

Chain branching

$$\left.\begin{array}{l} L_nOOH \\ L_nOOH \\ L_nOOH \end{array}\right\} \longrightarrow \left.\begin{array}{l} L_nO^\bullet + OH^- \\ L_nOO^\bullet + H^+ \\ L_nO^\bullet + {}^\bullet OH \end{array}\right\} \longrightarrow \text{more chain reactions} \qquad \begin{array}{r} (3a) \\ (3b) \\ (3c) \end{array}$$

Branching reactions are a second stage of propagation in which the radical chain reaction is expanded, establishing new chains at faster rates. In basic propagation (Reaction 2), peroxyl radicals are the only chain carriers; they react rather slowly ($k = 36–62\,\mathrm{L\,mol^{-1}\,s^{-1}}$) and quite specifically, and the chain continues one abstraction at a time from the initiation point. Without forces that decompose hydroperoxides, this process can continue indefinitely while hydroperoxides accumulate. However, UV light, moderate heat, metals, or heme compounds decompose hydroperoxides to give alkoxyl and peroxyl radicals plus ions (metals) or alkoxyl radicals and hydroxyl radicals (UV light and heat), all of which initiate new free radical chains that branch off of and expand the original chain. Hence, the net effect of LOOH breakdown is a transition in mechanism and kinetics. Lipid oxidation gathers steam, increasing in rate and extent as $LO^\bullet$ becomes the dominant, faster chain carrier ($k = 10^6–10^7\,\mathrm{L\,mol^{-1}\,s^{-1}}$) and secondary chains dramatically amplify and broadcast lipid oxidation. A single initiating event can thus lead to sequential oxidation of literally hundreds of molecules in the primary chain and in secondary branching chains.

In early stages of lipid oxidation while hydroperoxides are just beginning to accumulate, the hydroperoxide decompositions occur monomolecularly (Reaction 3). As oxidation progresses and hydroperoxides accumulate, decomposition shifts to bimolecular mechanisms that convert stable or slowly reacting species to multiple highly reactive radicals:

$$2\,LOOH \longrightarrow LO\underbrace{OH\ldots H}OOL \longrightarrow LO^\bullet + H_2O + {}^\bullet OOL \qquad (4)$$

$$LOO^\bullet + LOOH \rightarrow LO^\bullet + \text{epoxy} - LO^\bullet + {}^\bullet OH \qquad (5)$$

The initial effect of bimolecular decomposition is a dramatic acceleration of lipid oxidation, but eventually a point of net LOOH decomposition is reached. At that point, termination reactions such as radical recombination or alkoxyl radical scission take over, and oxidation slows, stable secondary products form, and off-flavors and odors become detectable.

Termination

Termination implies that a process is coming to a close. For lipid oxidation as a process, "termination" is a misnomer because lipid oxidation never fully stops. A *specific radical* may be terminated as it forms some product, but it leaves behind another radical *so the chain reaction continues*. Net oxidation slows down when radical quenching processes exceed the rate of new chain production, and the momentum of oxidation shifts from radical propagation and chain expansion to generation of stable products. To reflect this shift, "termination" in the discussion below refers to stopping an individual lipid radical, not the overall reaction. The cumulative effect on a reaction system such as food is determined by the number of radical chains being terminated.

Lipid free radicals terminate to form nonradical products primarily by three mechanisms:

(a) Radical recombinations
(b) Scission reactions when proton sources (e.g., water) are present to stabilize products
(c) Co-oxidation of nonlipid molecules such as proteins

The mechanisms dominating in a given system are influenced by the nature and concentration of the radicals, the temperature and oxygen pressure, and the solvent.

Radical Recombinations. The limitless number of variations possible for radical recombinations is one reason for the broad range of oxidation products detected in lipid oxidation. Despite the possibilities, recombinations are not random, and distinct patterns of favored recombinations have been identified. Some of the most important recombinations and their products are

$$\text{Alkyl radicals } (L_1^\bullet + L_2^\bullet) \rightarrow \text{alkane polymers} \qquad (6a)$$

$$\text{Peroxyl radicals } (L_1OO^\bullet + L_2OO^\bullet) \rightarrow \text{alcohols and ketones, alkyl peroxides} \qquad (6b)$$

$$\text{Alkoxyl radicals } (R_1O^\bullet + R_2^\bullet) \rightarrow \text{ethers, ketones, alkanes} \qquad (6c)$$

$$(R_1O^\bullet + R_2O^\bullet) \rightarrow \text{alkyl peroxides, ketones, alcohols} \qquad (6d)$$

Temperature and oxygen pressure are key determinants of radical recombination pathways (Figure 2). $L^\bullet$ reactions dominate under low-oxygen ($pO_2 = 1$ to about 80–100 mm Hg) and high-temperature (reduced O_2 solubility) conditions. High pO_2 and lower temperatures favor $LOO^\bullet$ reactions. $LO^\bullet$ contributions to the product mix dominate in secondary stages of oxidation and at moderate temperatures and oxygen pressures when LOOH or $LOO^\bullet$ decompositions are faster than their formation. Radical recombinations are diffusion- and concentration-controlled, so they are favored in neat oils; they decrease with lipid dilution.

Formation of dimers and polymers increases viscosity in oxidized oils. Perhaps just as importantly, alcohols, ketones, ethers, and so on, are volatile compounds and flavor components that augment those produced in scission reactions and provide the undertones and secondary notes that round out flavors. Ketones and dialkyl peroxides, in particular, are unique to recombination reactions.

Scission Reactions of $LO^\bullet$. Of all the pathways active in lipid oxidation, scission of alkoxyl radicals probably has the greatest practical consequences for any kind of consumer product because the products generated are

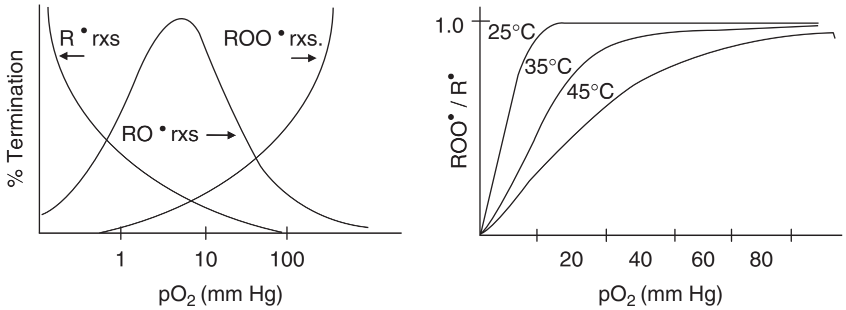

Figure 2. Effects of oxygen and temperature on termination processes in lipid oxidation. [Redrawn from Labuza (1) and Schaich (2). Used with permission.]

Table 1. Typical Scission Products Produced from Important Oxidized Polyunsaturated Fatty Acids Undergoing Oxidation and Associated Off Flavors

Product Classes	Carbon Chain Lengths	Major Products	Associated Flavors
		Oleic Acid	
Hydrocarbons	6–8	Nonanal	Fresh, citrus
Alkanals	2–4, 5, 6, 7, 8, 9, 10, 11	Octanal	Fresh, citrus
2-Alkenals	6–9, 10, 11	Undec-2-enal	Sweet, fatty
Acids	1, 6, 7, 8, 9	Undecanal	Fatty
Alkanols	5–8	2-decenal	Tallowy
Alkylformates	2–8		
		Linoleic Acid	
Hydrocarbons	3–5	Hexanal	Green-fruity, bitter almond
Alkanals	3, 4, 5, 6, 7, 8	2,4-Decadienal	Fried
Alkenals	7, 8, 9, 10	2-Octenal	Woodbugs-fatty, nutty
Dienals	9, 10	2-Heptenal	Fatty-putty, bitter almond
Oxo-alkanals	7–9	1-Octene-3-one	Metallic moldy, mushroom
Ketones	7, 8	Pentanal	Sharp, bitter almond
Alcohols	3, 4, 5, 6, 7, 8	Heptanal	Oily putty, soapy, fruity
Acids	1, 5, 6, 7, 9		
Esters	1, 6, 7, 8		
		Linolenic Acid	
Hydrocarbons	1–3	2,4-Heptadienal	Rotten apples, fried
Alkanals	1, 2, 3, 6	3-Hexenal	Green leaves, green tomatoes
Alkenals	4, 5, 6, 7	Propanal	Sharp, irritating
Dienals	7–9	2,4,7-Decatrienal	Fishy
Trienals	10	2-Pentenal	Sharp, painty, green
Ketones	5, 18	Octadienal	
Alcohols	3, 4, 5, 6, 7, 8	Pentene-3-one	Sharp, fishy
Acids	1, 5, 6, 7, 9	Octadiene-2-one	Fatty-fruity
Esters	1, 6, 7, 8		
Oxo-alkanals			
Arachidonic Acid			
Alkanal	2, 6, 7	Hexanal	Green-fruity, bitter almond
Alkenal	7, 8, 9, 11	2,4-Decadienal	Fried
Dienal	9, 10, 11, 12	2,4,7-Tridecatrienal	
Ketones		2-Heptenal	Fatty-putty, bitter almond
Alkanes	5, 6	2-Octenal	Woodbugs-fatty, nutty
Aldehyde esters	4, 5	Pentanal	Sharp, bitter almond
		1-Octen-3-one	Metallic, moldy, mushroom
		4-Decenal	Tallowy
		3,5-Undecadien-2-one	
		2,6-Dodecadienal	

responsible for the distinctive volatile off-odors and off-flavors associated with rancidity. Lipid alkoxyl radicals undergo scission of the C–C bond on either side of the $LO^{\bullet}$ group to yield a mixture of carbonyl products (typically aldehydes, alkanes, and oxo-esters from the initial alkoxyl radicals) and free radicals:

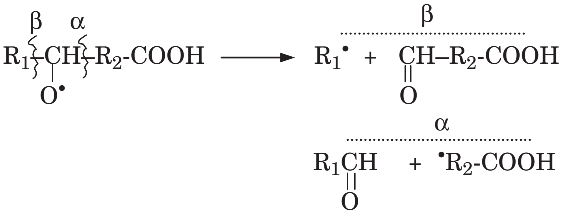

$$R_1\overset{\beta}{-}\underset{O^{\bullet}}{CH}\overset{\alpha}{-}R_2\text{-COOH} \longrightarrow R_1^{\bullet} + \underset{\|}{\overset{}{CH}}\text{–}R_2\text{-COOH} \quad \text{or} \quad R_1\underset{\|\\O}{CH} + {}^{\bullet}R_2\text{-COOH} \qquad (7)$$

Unsaturated radical fragments oxidize still further and undergo secondary scissions in similar fashion to produce carbonyls and alkanes of still shorter chain length. Consequently, the mix of breakdown products that accumulate in oxidized lipids can become quite complex, as shown in Table 1 for the four major unsaturated fatty acids.

Scission requires a strong proton donor such as water to stabilize the products and drive the reaction forward. Scission is a minor process in neat lipids at room temperature. However, in the presence of water (e.g., in emulsions), acid, or other polar solvents, scission is rapid and competitive with hydrogen abstraction, accounting for about half of alkoxyl radical reactions, even in early oxidation. Scission is also favored in dilute solution of lipids where there is reduced competition from hydrogen abstraction. However, because $LO^{\bullet}$ scission has a large activation energy and Arrhenius factor, the greatest contribution of this termination (and propagation) reaction is at elevated temperatures. Heat accelerates alkoxyl radical scissions in all solvents, although the pattern of cleavage may change as temperature increases.

The most notorious scission product of lipid oxidation, malondialdehyde (MDA), arises from multiple scissions of cyclic internal hydroperoxides formed in fatty acids with three or more double bonds (linolenic and higher). MDA formation is facilitated in aprotic solvents and by low lipid concentrations, limited oxygen pressures, and photosensitized oxidation; and it requires conditions for endoperoxide cleavage, namely, mild heat and acid. In autoxidizing lipids, yields of authentic MDA are usually less than 0.1%; but in photosensitized fatty acids where internal hydroperoxides are formed in high concentrations, MDA concentrations can reach 5% or higher. Malonaldehyde is probably the most common measure of lipid oxidation in complex food systems, but its analysis is quite often misused and misinterpreted.

Co-oxidation of Nonlipid Molecules. Hydrogen abstractions by lipid alkoxyl and peroxyl radicals are not selective for fatty acids. Nonlipid molecules such as amino acids, proteins, nucleic acids, antioxidants, carotenoids and other pigments, carbohydrates, and even vitamins also have abstractable H's and thus can serve as substitutes for fatty acids, intercepting the lipid free radical chain. This process terminates lipid oxidation chains, but reroutes radicals and oxidation to proteins and other biomolecules. As in lipids, these radicals add oxygen to form peroxyl radicals that may also abstract H's from other molecules or lead to oxidative degradation of the molecular target, whatever class of compounds it may be. In this way, lipids serve to "broadcast" oxidation damage to other molecules which then provide footprints of lipid oxidation in foods and biological systems.

Radical transfer to nonlipid molecules has several critical consequences. Co-oxidation reactions alter lipid oxidation kinetics, mechanisms, and overall effects in foods and biological systems. Immediately, there is an apparent antioxidant effect in terminating individual lipid radical chains and slowing accumulation of measurable oxidation products. However, if initiation is not concurrently blocked, what appears to be inhibition of lipid oxidation is false: Detectable oxidation products are merely shifted from lipids to other molecules, but *ab initio* generation of new chains by initiators continues. If traditional lipid oxidation products such as peroxide values and aldehydes are analyzed, oxidation appears to be very low because radicals are transferred before lipid products are formed. However, production of off-flavors, browning, texture changes, nutritional losses, etc., continues, now mediated by other molecules, particularly proteins:

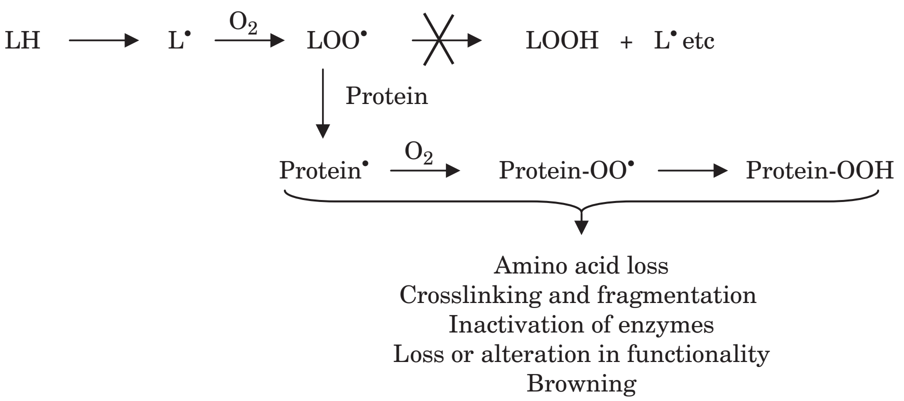

(8a)

(8b)

In some co-oxidations, lipids add to the target molecules, particularly proteins. This limits extractability of lipids for analysis and removes lipids from product streams normally analyzed, compounding problems in assessing the true extent of lipid oxidation. Consequently, in systems where co-oxidations are active, lipid oxidation must be followed by loss of fatty acids in addition to oxidation products such as peroxides, malonaldehyde, and anisidine values. Footprints of lipid oxidation in the form of specific co-oxidation products or molecular property changes (e.g., protein crosslinking, amino acid loss, degradation of functionality) must also be tracked to avoid severely underestimating both the extent and the effects of lipid oxidation in complex systems.

Time Course of Lipid Oxidation

Lipid oxidation is often divided into three rate periods described in terms of hydroperoxide reactions:

1. Induction period—very low level oxidation, formation of LOOH undetectable.
2. Monomolecular rate period—initial stages of oxidation up to $\sim 1\%$ oxidation, LOOH accumulate slowly and decompose as single, isolated molecules when exposed to UV light, metals, or heat (Reaction 3).
3. Bimolecular rate period—later stages of lipid oxidation up to $\sim 7–15\%$ oxidation, LOOH accumulate rapidly, begin to decompose in pairs via LOOH (Reaction 4) or $\mathrm{LOO}^{\bullet} + \mathrm{LOOH}$ (Reaction 5), and secondary products form.

The integration and progression of individual reactions of initiation, propagation, and termination into an overall oxidation process with these three rate periods is shown in Figure 3. During the induction and early monomolecular period, $\mathrm{LOO}^{\bullet}$ is the main chain carrier and propagation is relatively slow. As active oxidation develops and LOOH decompose, both $\mathrm{LOO}^{\bullet}$ and $\mathrm{LO}^{\bullet}$ contribute to propagation. However, $\mathrm{LO}^{\bullet}$ reactions are much faster and more specific, so $\mathrm{LO}^{\bullet}$ becomes the dominant chain carrier and controls directions of reactions in late monomolecular and throughout the bimolecular rate periods, partially accounting for increasing oxidation rates.

FACTORS AFFECTING LIPID OXIDATION: PRO-OXIDANTS

Many factors alter rates of lipid oxidation. Some of the most common catalysts and inhibitors are:

(a) Nature of lipids: number of double bonds
    i. Configuration of double bonds (*trans* versus *cis* and conjugation)
    ii. Level and type of phospholipids present
    iii. Free fatty acids versus esters versus triacylglycerols.
(b) Surfaces: Bulk oil – exposed surface versus emulsions versus dispersal on solid surface
(c) Presence of other components:
    i. Pro-oxidants
        - Preformed hydroperoxides
        - Metals
        - Porphyrins, chlorophylls, heme compounds
        - Lipoxygenase and cyclooxygenase
        - Amino acids
        - Ascorbic acid (low concentrations)
    ii. Antioxidants (endogenous and added)
        - Polyphenols
        - Amino acids
        - Metal chelators and complexers
        - Synergists
        - Glutathione peroxidase
    iii. Interceptors
        - Proteins
        - DNA
        - Vitamins
        - Pigments
(d) Environment and solvent system: temperature, light, oxygen pressures, water, pH, packaging.

Of these, light, oxygen pressure, metals, water, chelators, and antioxidants are amenable to control by packaging.

Light

Light is a key catalyst of lipid oxidation in foods and cosmetics, yet is often discounted during handling, processing, and even storage. At low wavelengths ($< \sim 254$ nm),

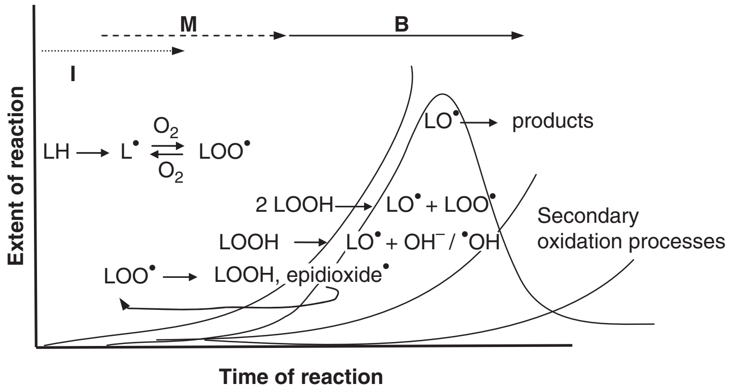

Figure 3. Changes in dominant lipid oxidation reactions and products over the course of lipid oxidation. Induction period (I), monomolecular rate period (M), and bimolecular rate period (B). [Modified from Schaich (2). Used with permission.]

ultraviolet light has enough energy to break bonds and form $L^\bullet$ radicals, although most uv damage to lipids occurs at wavelengths $<200\,\text{nm}$. Much more active is UV-induced decomposition of hydroperoxides to generate two reactive radicals that rapidly propagate the radical chain:

$$\begin{array}{lclcrl} \text{ROOH} & & \text{RO}^\bullet + {}^\bullet\text{OH} & & \text{ROH} & (9a)\\ \text{HOOH} & \xrightarrow{h\nu(uv)} & \text{HO}^\bullet + {}^\bullet\text{OH} & \xrightarrow{2L_2H} & 2\,L_2^\bullet + H_2O & (9b)\\ \text{LOOH} & & \text{LO}^\bullet + {}^\bullet\text{OH} & & \text{LOH} & (9c)\end{array}$$

(ROOH is any organic hydroperoxide, HOOH is hydrogen peroxide, LOOH is a lipid hydroperoxide).

Hydrogen peroxide is actively generated in foods by metal autoxidation, but can also be produced by UV degradation of aqueous solutions. Light decomposition of hydroperoxides is a major contributor to destabilization of stored foods, particularly under fluorescent lights in laboratories, storage facilities, and stores.

Visible light ($>400\,\text{nm}$) initiates lipid oxidation indirectly through photosensitizers, molecules that absorb light and transfer the excitation energy to molecular bonds in lipids to form free radicals directly (Type 1) or to oxygen to form singlet oxygen $^1O_2$, which then adds to double bonds and forms hydroperoxides in unsaturated fatty acids without intermediate radicals (Type 2). Photosensitizers in foods and biological materials are usually molecules with multiple carbonyls and/or an extended conjugated double bond system. Most pigments and other molecules listed below have this required structure. Chlorophyll, in particular, is a very potent photosensitizer that produces both free radicals and singlet oxygen, with the dominant reactions depending on substrate and reaction conditions. Food dyes are listed with a question mark because many food colors have requisite structures that make them good candidates for sensitization, but their action has not yet been documented.

	Type 1: Free Radical	**Type 2: Singlet Oxygen**
Sensitizers	Chlorophyll Pheophytin Hemes Protoporphyrin Myoglobin Hemoglobin Flavins (especially riboflavin) Xanthenes Anthracenes Anthroquinones Crystal violet Food dyes (?)	Chlorophyll Hemes Erythrosine Rose bengal Flavins Methylene blue Proflavine Eosin Food dyes (?)
Quenchers	Phenols, polyphenols Tocopherols (carotenes)	Carotenes Tocopherols

Quenchers are antoxidant compounds that can selectively react with light-induced radicals and singlet oxygen, thereby preventing their reaction with lipids and other biomolecules. Carotenes are important $^1O_2$ scavengers in foods. They are also radical scavengers, but listed in parentheses because in high concentrations they can become pro-oxidants.

Light catalysis is nearly always present, but can be verified by comparison of samples incubated open versus in the dark, by oxidation kinetics, and by presence of specific photolysis products. Type 1 photosensitization is qualitatively indistinguishable from autoxidation, but much faster. It characterized by the following patterns:

Mechanism:	Free radical
Kinetics:	Induction period present
	Dependent on pO_2
	Rate not $\propto$ number of double bonds
	Relative reactivity: 18:1 ~1 18:2 17 18:3 25
Products:	Conjugated dienes formed with LOOHs in external C-9, C-13, and C-16 positions
	Scission products all from external LOOHs

Type 2 singlet oxygen photosensitized oxidation has distinctively different oxidation patterns:

Mechanism:	“ene” rx, concerted addition of O_2 to double bonds to form LOOH without free radicals; radicals are generated subsequently by LOOH decomposition
Kinetics:	No induction period
	Independent of O_2 (when O_2 not limiting)
	Dependent on sensitizer concentration
	Rate directly $\propto$ number of double bonds
	Relative reactivity: 18:1 ~1 18:2 2 18:3 3
Products:	Both nonconjugated and conjugated LOOHs
	LOOHs at all positions, high proportion at internal positions (e.g., C-10 and C-12)
	High proportion of internal cyclics, endoperoxides, epoxides, di- and tri-hydroperoxides (all are precursors of light-induced off-flavors)
	Scission products from internal LOOHs, altered scission position preferences

When these kinetic characteristics and products are observed in products, light-mediated initiation can be presumed, and protection from light during processing and with packaging will be critical for stabilization. Indeed, blanking out light (e.g., by packaging) prevents both photosensitized generation of LOOH and UV decomposition of LOOH and thus has huge immediate effects on kinetics and consequences of lipid oxidation. However, caution is required when deducing causes of oxidation or mechanisms of a given agent from product mixes and kinetics because many photosensitizers change mechanisms with solvent and concentration. For example, riboflavin normally photosensitizes by free radicals but at low concentrations it converts to the $^{I}O_2$ mechanism. Thus, sensitivity to light often changes with product formulation and phase localization and distribution of photosensitizers and quenchers. For example, cheese will behave differently than milk under light, even though the fat and sensitizer composition is similar for each. This needs to be kept in mind when tracking and comparing causes of oxidation in different oils, foods, and cosmetic products and planning protection strategies.

Oxygen Pressure

Lipid oxidation requires oxygen, so removal or limitation of oxygen has been a traditional approach to inhibiting lipid oxidation in packaged processed foods. Nevertheless, effects of oxygen are evident mostly at low oxygen pressures and in early stages of lipid oxidation, so use of low oxygen to control lipid oxidation must focus on a rather narrow reaction window.

Since oxygen does not react with lipids directly, lipid oxidation depends critically on the concentration and reactivity of initiators that produce reaction sites for oxygen, either $L^\bullet$ by conventional initiators or $^1O_2$ by photosensitization, particularly in the low pO_2 range (1 to 80–100 mm Hg). Once reaction sites are available, oxidation rates increase dramatically as pO_2 increases (Figure 4), but the catalytic effect of oxygen levels off at $pO_2 \sim 100$ mm Hg or when $[O_2] > [LH]$ and $[L^\bullet]$ (exact level depends on reaction system). Similarly, once enough radicals are present to keep chain reactions going, formation of new $LOO^\bullet$ becomes much less important than hydrogen abstraction to propagate chains, and the effect of increased oxygen on rate reaches a steady-state equilibrium as oxidation progresses.

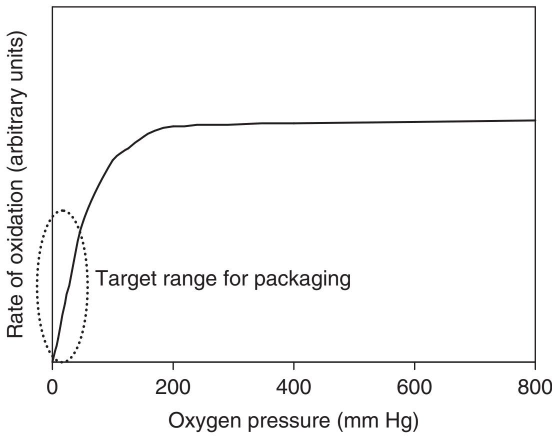

Figure 4. Effects of oxygen on the rate of lipid oxidation. Rate of oxidation increases rapidly with increasing pO_2 when oxygen is limiting but is not affected by additional oxygen when $[O_2] > [LH]$. [Figure generalized from data of Bolland, (3).]

Kinetic rate equations show the complex relationship of oxygen to lipid oxidation rate. At low pO_2, the rate of lipid oxidation may be expressed simplistically as

$$\text{Rate of oxidation (low pO}_2) = k_o(k_i/k_{t1})^{1/2}[\text{LOOH}]\,[\text{O}_2] \tag{10}$$

where rate constants refer to $L^\bullet$ oxygenation, initiation, and termination by $L^\bullet$ recombinations, respectively. During early oxidation (monomolecular LOOH decomposition), the rate-limiting step is formation of $L^\bullet$ and peroxyl radicals, which requires oxygen. As oxidation progresses and LOOH increases, propagation reactions (i.e., hydrogen abstractions by $LOO^\bullet$ and by $LO^\bullet$ from LOOH decomposition) become the dominant rate determinants and the relative effect of oxygen diminishes.

At high pO_2, more than enough oxygen is present to add to every $L^\bullet$ formed, so the rate dependence shifts from oxygen to the concentration of available oxidizable lipids and propagation processes:

$$\text{Rate of oxidation (nonlimiting pO}_2) = k_p(k_i/k_{t3})^{1/2}[\text{LOOH}]\,[\text{LH}] \tag{11}$$

The overall rate then is determined by the balance between initiation (k_i) and peroxyl radical recombinations (k_{t3}), and it is proportional to the total amount and degree of unsaturation of available lipid plus propagating LOOH concentrations. The rate-limiting step now is abstraction of hydrogens to form LOOHs (k_p).

Hence, low oxygen needs to be combined with minimization of initiators and catalysts to maximize inhibition of lipid oxidation.

Metals

Redox-active metals are probably the most important initiators and catalysts of lipid oxidation in oils, foods, and biological systems because they are ubiquitous and active in many forms, they exert critical influence on both initiation and propagation, and trace quantities (nanomolar) are sufficient for effective catalysis. Only metals undergoing one-electron transfers (e.g., iron, copper, nickel, cobalt, vanadium, titanium, cerium) are active catalysts. Metals in their higher valence (M^{n+1}) states are primary initiators: They form $L^\bullet$ both directly by oxidizing double bonds in unsaturated fatty acids (Reaction 12, RCH=CHR is in a lipid chain) and indirectly by oxidizing other molecules to produce radicals that abstract hydrogens from unsaturated lipids LH (Reaction 13, R = lipid or any other oxidizable molecule).

$$\text{RCH=CHR} + \text{M}^{(n+1)+} \rightarrow \text{R}\overset{\bullet}{\text{C}}\text{H–}\overset{+}{\text{C}}\text{HR} + \text{M}^{n+} \xrightarrow{\text{LH}} \text{L}^\bullet + \text{RH} \tag{12}$$

$$\text{RH} + \text{M}^{(n+1)+} \rightarrow \text{R}^\bullet + \text{H}^+ + \text{M}^{n+} \xrightarrow{\text{LH}} \text{L}^\bullet + \text{RH} \tag{13}$$

Metals in their reduced forms (M^{n+}) —for example, Fe^{2+} and Cu^+—are not good initiators themselves, but they form reactive species by complexing with oxygen

(Reactions 14a–c) and by reducing oxygen to superoxide anion $O_2^{-\bullet}$, which dismutates to hydrogen peroxide and very reactive hydroxyl radicals (Reactions 14d–f).

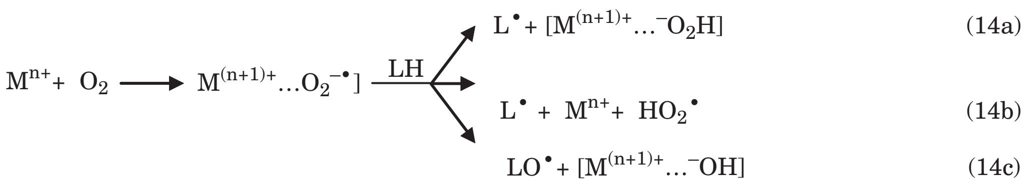

$$M^{n+} + O_2 \longrightarrow M^{(n+1)+}\ldots O_2^{-\bullet}] \xrightarrow{LH} \begin{cases} L^\bullet + [M^{(n+1)+}\ldots {}^{-}O_2H] & (14a) \\ L^\bullet + M^{n+} + HO_2^\bullet & (14b) \\ LO^\bullet + [M^{(n+1)+}\ldots {}^{-}OH] & (14c) \end{cases}$$

$$M^{n+} + O_2 \rightarrow M^{n+1} + O_2^{-} \qquad (14d)$$

$$2O_2^{-\bullet} \quad \text{or} \quad O_2^{-\bullet}/HOO^\bullet \rightarrow H_2O_2 \xrightarrow{M^{n+}} HO^\bullet + OH^- \qquad (14e)$$

$$HO^\bullet + LH \rightarrow H_2O + L^\bullet \qquad (14f)$$

Metals also decompose any traces of preformed hydroperoxides ROOH present in foods (in lipids or any other molecule) to alkoxyl radicals ($RO^\bullet$) (Reaction 15a), and higher valence state metals oxidize hydroperoxides to peroxyl radicals ($ROO^\bullet$) (Reaction 15b); both of these radicals initiate lipid oxidation chains. Note that unlike UV reactions, metal decomposition of hydroperoxides releases only a single reactive radical that reacts with lipids to generate $L^\bullet$.

$$Fe^{2+} + ROOH \xrightarrow{\text{fast}} Fe^{3+} + RO^\bullet + OH^- \xrightarrow{LH} ROH + L^\bullet \qquad (15a)$$

$$Fe^{3+} + ROOH \xrightarrow{\text{extremely slow}} Fe^{2+} + ROO^\bullet + H^+ \xrightarrow{LH} ROOH + L^\bullet \qquad (15b)$$

When both reduced and oxidized metals are present, catalysis of lipid oxidation is amplified tremendously by redox cycling (Reaction 16). Redox cycles occur slowly with metals and hydroperoxides alone, but rates can be accelerated several orders of magnitude in the presence of appropriate reducing agents, particularly ascorbic acid, that maintain the faster reacting lower valence state in metals:

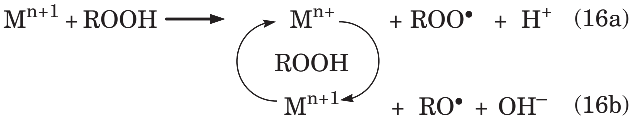

$$M^{n+1} + ROOH \longrightarrow M^{n+} + ROO^\bullet + H^+ \qquad (16a)$$

$$M^{n+} \xrightarrow{ROOH} M^{n+1} + RO^\bullet + OH^- \qquad (16b)$$

The mere presence of metals is not sufficient to guarantee catalysis of lipid oxidation. In foods and other products, metals are complexed to a wide variety of molecules, including organic acids, carboxylic acids, vicinal diphenols, amino acids, and proteins. How the metals are bound controls the rate of initiation by altering the availability of orbitals for electron transfer, the redox potential and oxidizing or reducing capacity, partitioning between aqueous and lipid phases, and associations with other molecules. In general, higher redox potentials make metal complexes better primary initiators, and low redox potential metal complexes markedly enhance propagation branching reactions. Selection of appropriate chelators can thus greatly modify metal reactivity in foods.

Heat

At frying temperatures, there is sufficient thermal energy to break covalent C–C or C–H bonds in the acyl backbone and form a variety of lipid alkyl radicals which then start the radical chains of oxidation. At moderate temperatures, heat exerts its main effects on processes that have high activation energies, so they can benefit most from a thermal boost. The rate constants in the list below refer to propagation, termination, and LOOH dissociation in sequence. As can be seen, most steps of lipid oxidation require little or no activation; only monomolecular and bimolecular decompositions of hydroperoxides have energy hurdles. Thus, in early stages of lipid oxidation, low to moderate heat breaks O–O bonds in traces of ROOH or LOOH preformed by other reactions, particularly metals, lipoxygenase, or photosensitizers. The $RO^\bullet$, $LO^\bullet$, and ${}^\bullet OH$ thus generated abstract hydrogens from neighboring lipids to form $L^\bullet$ and initiate radical chains. As oxidation progresses and LOOH accumulate, the major effect of heat shifts to acceleration of propagation rather than initiation.

Reaction	**Activation Energies (E_a)**
($L^\bullet + O_2$)	0 kcal/mol
k_p ($LOO^\bullet + LH$)	~5–15
k_t (2 $ROO^\bullet$)	~4
k_t (2 $R^\bullet$)	5
k_t ($R^\bullet + ROO^\bullet$)	1
*k_d (monomolecular)	31
*k_d (bimolecular)	50 uncatalyzed system

Accompanying faster oxidation kinetics is a heat-induced shift in dominant reaction pathways and resulting products that markedly affect food and cosmetic quality. The most important changes include:

- Abstraction of hydrogens from LOH and LOOH in preference to LH, shifting dominant products from volatile α and β scission products to >90% dimers and polymers.
- Shifts in types of dimers formed: β-scission of peroxyl oxygen increases → more C–O–C and C–C dimers and fewer C–O–O–C crosslinks.
- Altered scission patterns; for example, hexanal is major product of L under mild oxidation conditions, but 2,4-decadienal becomes dominant when systems were heated.

- Increased proportion of *trans* isomers, which certainly has implications under current labeling requirements for *trans* fats.

Although storage temperatures are always considered, the changes described above are much more pronounced at temperatures used in processing than at typical transportation and storage temperatures. Even relatively small increases in processing temperatures can dramatically shorten shelf life, as can be seen in the decreased induction period in oils [from Kaya et al. (4)]:

Induction Period of Fresh Oils (h)	**100°C**	**110°C**	**120°C**
Sunflower oil	9.0	4.4	2.2
Olive oil	12.4	6.2	2.8

Thus, control of temperature effects on lipid oxidation must be addressed at every stage of production as well as storage.

Water

No discussion of lipid oxidation is complete without discussion of moisture effects. As can be seen in the classical graph of moisture and water activity effects (Figure 5), lipid oxidation has very different reactivity patterns than other degradation reactions in foods. Unlike browning, enzyme reactions, nutrient decomposition, and microbial growth, which can all be stopped by sufficient removal or binding of water, there are no conditions under which lipid oxidation is not active. As would be expected, lipid oxidation is rapid at high moistures and water activity, as are all reactions (D), but surprisingly, lipid oxidation is just as rapid in very dry systems (A). The region of lowest lipid oxidation (B) corresponds to conditions in only a monolayer of water molecules is present on molecules in foods. Moving between regions, water appears to have both pro- and antioxidant effects on lipid oxidation. This biphasic action may be explained as follows:

A Dry systems—high oxidation:
Molecular sites of oxidation are bare, providing ready access of oxygen to lipids.
Metals are unhydrated and reactive.
Hydroperoxides are uncomplexed and decomposed readily.
The food matrix is open and porous, allowing free flow of oxygen

A→B Water binding to molecules provides surface protection—decreasing oxidation:
Water hydrogen bonds to LOOH, retards decomposition.
Water hydrates metals, inhibits electron transfers, and shifts redox potentials.
Water binding to surfaces of the macromolecular matrix retards oxygen diffusion.
Water attaches to potentially reactive sites, excluding oxygen.

B Monolayer value—lowest oxidation:
Conceptual single water molecules on molecular surface protects reactive sites from oxygen and catalysts but is insufficient for mobilization.

B→C Intermediate moisture region—increasing oxidation:
Hydration of molecules increases molecular mobility and reactivity.
Multilayers of water accumulate on molecular surfaces, dissolve catalysts, and increase their diffusion and interaction with lipids.
Metals mobilized and activated.

C→D Fluid water region—high but decreasing oxidation:
Water dilutes metals and other catalysts and reactants.
Emulsion formation separates lipid phases from most catalysts.
High moisture promotes nonenzymatic browning, products are antioxidants.

It is clear from the graph that the moisture content and water activity (a_w) of a product dictate an innate propensity for oxidation of products with unsaturated fatty acids, over and above effects of metals, heat, light,

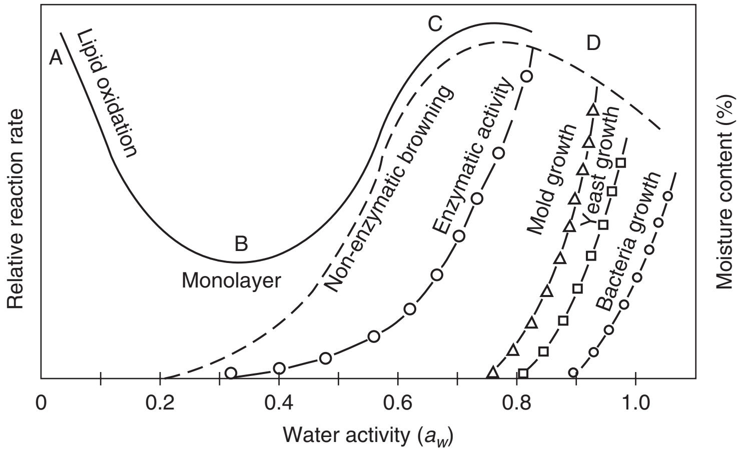

Figure 5. Effects of moisture content and water activity on rates of lipid oxidation in food products. [Modified from Labuza et al. (5). Used with permission.]

and other factors. While few foods or other products move from one extreme to the other during storage, drying out and moisture absorption to moderate extents are quite common and can occur within relatively short times, leading to rapid changing in lipid oxidation kinetics and products. A dry high-lipid product stabilized at the monolayer a_w can undergo explosive oxidation when it either loses or gains moisture and changes a_w. Similarly, intermediate moisture foods are moderately reactive, but they can be stabilized by losing moisture or have shelf-life severely shortened by gaining moisture and increasing a_w. Thus, moisture content and degree of water binding by system molecules (a_w) must be carefully controlled by formulation and packaging in order to stabilize foods and other materials against lipid oxidation.

FACTORS AFFECTING LIPID OXIDATION—ANTIOXIDANTS

Type 1. Agents that Prevent Free Radical Production

These are metals chelators (the most important of which is EDTA, ethylenediamine tetraacetic acid, shown below), metal complexers (e.g., citric acid, polyphosphates, and to a lesser extent ascorbic acid), and singlet oxygen scavengers, particularly carotenoids. The conjugated double bonds of carotenoids provide many sites that preferentially react with $^1O_2$ and spare fatty acids.

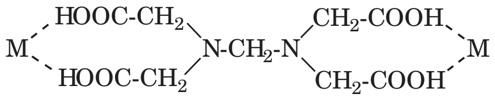

EDTA

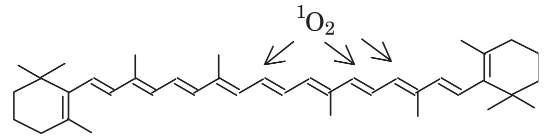

Carotenoids

Initiation inhibitors are commonly overlooked as antioxidants but serve perhaps the most critical role because they control the radical load that must be overcome by free radical scavengers. The radical load is the cumulative total of radicals from all sources that must be quenched to seriously limit progression of lipid oxidation. The radical load determines the type, amount, and reactivity of antioxidant necessary to stabilize a given system. If the radical load is too high, no amount of radical chain stopper—what is usually thought of as antioxidants—can prevent lipid oxidation. At the same time, initiation inhibitors cannot work alone. Some radicals from various sources are always produced, and these must be quenched to prevent establishment of cycling chain reactions. Thus, Type 1 antioxidants are usually combined with Type 2 antioxidants for improved all-round efficiency.

Type 2. Free Radical Chain Stoppers

These are radical quenchers that donate hydrogens to $LOO^\bullet$ or $LO^\bullet$ faster than lipid chains:

$$LOO^\bullet + AH \rightarrow LOOH + A^\bullet \qquad R^\bullet \tag{17a}$$

$$LOO^\bullet + AH_2 \rightarrow LOOH + AH^\bullet \rightarrow A + RH \tag{17b}$$

For a compound to be an antioxidant, its radical $A^\bullet$ must be stable and unreactive or yield nonradical products, so it does not propagate radical chains. The dominant antioxidant structures with H-transferring activity are phenolic compounds in which the $A^\bullet$ reactivity is reduced by resonance delocalization of the free electron over the aromatic ring.

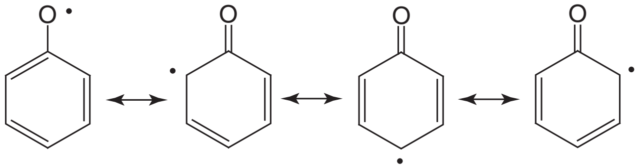

The standard synthetic antioxidants BHA, BHT, and propyl gallate are all phenolic compounds, as are natural antioxidant tocopherols, flavonoids in fruits, and many herb and spice components, to mention just a few. Structures of some common phenolic antioxidants are shown in Figure 6.

Some antioxidants have more than one phenolic group per ring. In general, antioxidant activity increases with the number of phenolic groups on a single ring and per molecule in complex structures. Phenols with multiple –OH groups next to each other on the aromatic ring also complex metals, so they have multiple mechanisms for inhibiting lipid oxidation.

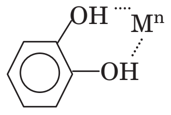

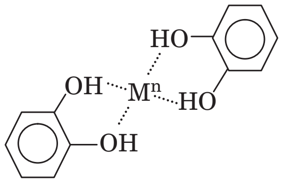

Type 3: Environmental Factors that Limit Oxidation

Environmental factors are not initiators or catalysts of lipid oxidation in themselves, but they provide conditions under which oxidation reactions occur, and thus they play critical roles in controlling the rate and direction of lipid oxidation as well as the resulting product mix during storage. Indeed, if environmental factors are ignored, no amount of primary antioxidant will be sufficient to stabilize a food or other material against lipid oxidation.

Environmental factors that can influence lipid oxidation encompass a wide variety of conditions to which a product is exposed in moving from formulation through processing to storage. Formulation factors include

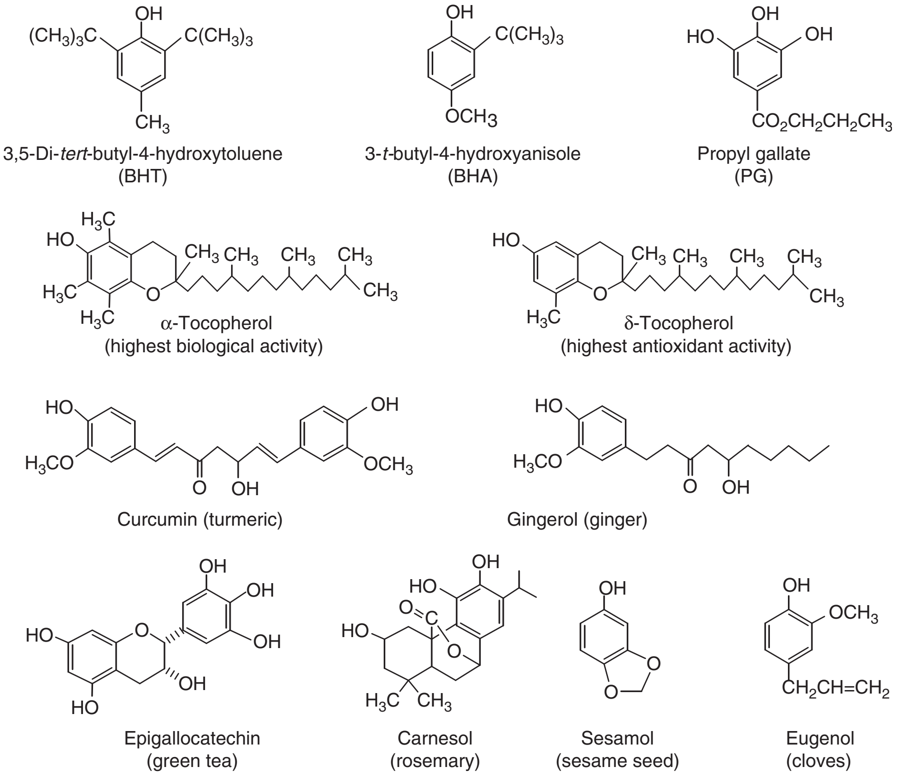

3,5-Di-*tert*-butyl-4-hydroxytoluene (BHT)

3-*t*-butyl-4-hydroxyanisole (BHA)

Propyl gallate (PG)

α-Tocopherol (highest biological activity)

δ-Tocopherol (highest antioxidant activity)

Curcumin (turmeric)

Gingerol (ginger)

Epigallocatechin (green tea)

Carnesol (rosemary)

Sesamol (sesame seed)

Eugenol (cloves)

Figure 6. Structures of some common antioxidants. The top row shows synthetic antioxidants, whereas the other rows are antioxidants from natural materials.

moisture levels and pro-oxidant enzymes such as lipoxygenase and lipase that require blanching to inactivate. Processing environment factors that are important include everything from potential metal contamination from equipment and processing water to temperature, light, and oxygen exposure during processing. Packaging and storage environments include similar factors: pO_2 inside the package and surrounding it, vacuum versus inert atmosphere versus air headspace, moisture inside the package and migrating into or out of it, temperature and light exposures, and so on. Control of environmental factors to limit or prevent lipid oxidation during storage must be a major focus for packaging of foods.

WHAT ROLE DOES PACKAGING PLAY IN CONTROLLING LIPID OXIDATION?

Successful strategies for stabilizing any product against lipid oxidation start with product components and formulations that first minimize endogenous catalysts, then incorporate chelators, antioxidants, and $^1O_2$ quenchers to deactivate those that cannot be eliminated. Then add processing that protects at every step (e.g., by use of lowest feasible temperatures and light exposure), as well as limitation of oxygen via nitrogen blankets or vacuum. Packaging is the critical finishing step that maintains product quality during storage. Packaging cannot cure deficiencies of formulation and processing, but the storage environment it provides largely determines what reactions occur and how long products are stable during storage.

Packaging barrier properties and delivery modes contribute to control of lipid oxidation at all three stages: initiation, propagation and chain branching, and termination. Different reactions dominate and different factors affect each stage, so it is not likely that a single protective approach will meet the demands of all stages. Here, the concept of radical load must be highlighted. To be successful, any antioxidant or protective function must deal with the total lipid radical load generated from all sources in formulation, processing, and packaging. If the total radical load is extremely high, no single approach can eliminate the oxidation. Thus, two general guidelines should be followed to efficiently limit lipid oxidation:

1. When designing antioxidant strategies, emphasize limitation of initiation. Radicals not generated do not propagate chains or need to be quenched.
2. Use combinations of antioxidant approaches that address action at each stage of lipid oxidation and that act on multiple aspects of lipid oxidation simultaneously.

Table 2 shows the multiple functions that packaging provides to limit lipid oxidation during storage and the various approaches that can be used and combined to achieve them. Limitation of initiation is especially critical for products requiring significantly extended shelf lives, so most emphasis is placed on this stage. The light and oxygen barriers of traditional packaging materials such as glass, tin cans, and some polymers provide an essential primary line of defense against lipid oxidation, preventing or severely limiting levels of $L^\bullet$ and $LOO^\bullet$ produced during

Table 2. Packaging Actions and Approaches for Controlling Initiation, Propagation, and Termination of Lipid Oxidation

Oxidation Stage and Action	Necessary Packaging Action	Control Factor	Packaging Approach	Examples
Initiation				
Oxygen	Provide and maintain inert atmosphere	Oxygen	Remove or replace oxygen	Hermetic packaging with vacuum, deaeration, nitrogen headspace
	Oxygen barrier, prevent LOO$^\bullet$ formation		Impermeable materials	Glass, EVOH, polyamide, PVDC
			Laminants with barrier layers	Metal foils and oxides, hydrocarbon films, whey protein isolates, Starch films, hydroxy-functional hyperbranched polyester films
			Barrier coatings	Hydrocarbon films on PET
			Polymer multilayers w/wo additives	Montmorillonite clay nanoparticles in PET, PVDC/PE
	O_2 scavenger in package or film, remove residual oxygen		Oxygen sorbent sachets, labels, lid liners	Elemental or ferrous iron, cobalt-fatty acid salts in olefin plastics
			Oxygen sorbent packaging	Fe^{2+}, ascorbic acid, glucose-glucose oxidase, Co(II) acetate, PP in food contact layer
Light	Block light access	Light	Light-impermeable materials	Colored glass, cans
			Impermeable laminant layers	Metal laminant layers
	Light filter		Plastics or coatings with UV blockers	Hydroxyaromatic compounds, hindered amines, salicylates
Metals	Remove metals from package contents	Chelators	Controlled release packaging	EDTA, citric acid, amino acids
			Metal-bonding layers	Chitosan, N-carboxymethyl chitosan
Radicals	Deliver radical quenching antioxidants	Antioxidant levels	Controlled release packaging	Tocopherol, sesamol, BHT, BHA, TBHQ
Propagation				
H abstraction	Deliver radical quenching antioxidants over time	Antioxidants	Controlled release packaging	Tocopherol, sesamol, BHT, BHA, TBHQ
LOOH decomposition	Light barrier (UV and visible): prevent decomposition of LOOH → branching	Light	See light in Initiation	

(*Continued*)

Table 2. Continued

Oxidation Stage and Action	Necessary Packaging Action	Control Factor	Packaging Approach	Examples
	Moisture barrier:	Moisture	Impermeable materials	Glass, oriented PP, metallized polyester films
	Prevent dehydration and exposure of reactive sites Slow molecular migration Stabilize LOOH		Laminants with barrier layers	Polyamide layers, zein, starch, soy protein/wheat gluten, Propylene glycol midlayer between PVA sheets
	Limit scission reactions that release volatiles		Impregnated or coated papers	Polyolefins, waxes, starch acetates, acrylic-based latex, Polyvinyl alcohol
	Maintain low oxidation rates		Moisture sorbers	Silica gel, clays, encapsulated polyvinyl alcohol
	Temperature maintenance, prevent LOOH decomposition	Heat	Insulation	Biofoams
Regeneration of $LOO^{\bullet}$	Oxygen barrier, limit $L^{\bullet} \rightarrow LOO^{\bullet}$	Oxygen	See oxygen in Initiation	
Termination				
Radical recombination	Oxygen barrier, limit oxydimer and polymer formation	Oxygen	See oxygen in Initiation	
	Intercept radical reactions	Antioxidant levels	Controlled release packaging	Tocopherol, sesamol, BHT, BHA, TBHQ
$LO^{\bullet}$ scission	Moisture barrier: prevent moisture sorption Limit $LO^{\bullet}$ scission Inhibit generation of volatile off-flavors and odor compounds	Moisture	See moisture in Propagation	
Secondary oxidation reactions	Oxygen barrier, limit oxidation to a few major products	Oxygen	See oxygen in Initiation	

storage. This, in turn, allows fewer oxidation chains to be generated and fewer radicals to be propagated, greatly reducing the amount of antioxidant needed to quench the radicals present. Innovative packaging that can deliver active compounds such as UV absorbers, singlet oxygen scavengers, metal chelators, or phenolic antioxidants supplements traditional packaging and offers new opportunities for creative combinations of approaches that increase overall antioxidant effectiveness.

Barrier properties of packaging also limit progression of lipid oxidation, particularly by excluding light that decomposes hydroperoxides and by controlling moisture loss that destabilizes LOOH; also, moisture gain mobilizes catalysts. Radical propagations are particularly active during this period, so exclusion of oxygen remains very important, and here the advent of oxygen scavenging films and sachets have added exciting new opportunities to remove residual oxygen that remains in packages after processing and fuels oxidation during storage. Caution is warranted, however, when using iron-based oxygen scavengers: Any leaching of molecular or solid iron into the package can catalyze rapid lipid oxidation. New controlled-release packaging is being developed to deliver either volatile antioxidants such as BHT (synthetic) or sesamol (natural) or nonvolatile antioxidants such as mixed tocopherols slowly over time as endogenous antioxidants are consumed. Combining controlled release with high barrier packaging greatly increases the effectiveness of packaging, protecting food quality and significantly extending shelf life.

Although usually overlooked, barrier properties of packaging also play important roles in directing the types of products formed during lipid oxidation. Oxygen and moisture, in particular, favor formation of volatile breakdown products that are responsible for the off-odors and flavors associated with rancidity; these volatile products are immediately noticeable when the package is opened and can lead to consumer rejection. Packaging delivery of radical scavengers in this stage, where antioxidants naturally present in the food or added in the formulation have already been consumed, can have a major impact on limiting secondary oxidations and polymerizations that markedly degrade product flavor and aroma, color, and texture, and nutrition.

Unfortunately, some questionable practices are also developing. Because the off-odors of lipid oxidation are one of the first signs of trouble when a package is opened, and a bad whiff can lead a consumer to dump the product directly, there is currently intense interest in incorporating carbonyl scavengers in packaging to bind and remove volatile odor products of lipid oxidation. However, there are serious legal issues with this practice because FDA regulations prohibit any practices that cover up faulty practices or decomposing foods. Rancid off-odors definitely indicate product deterioration and the possible presence of toxic products. Removing them eliminates consumers' first indicator of trouble and is tantamount to covering up spoiled food. Both short-term and long-term toxicity issues with oxidized lipids remain to be clarified, but all evidence points to the need to avoid ingestion of oxidized lipids through foods, nutraceuticals, or cosmetic lotions.

SUMMARY

Lipid oxidation is indeed a complicated reaction that plays havoc with stability of any product or material containing lipids. The multiple pathways and products can sometimes seem overwhelming and impossible to control. Nevertheless, there is also logic and organization in lipid oxidation that, with careful consideration, make it possible to monitor, understand, and control in a wide range of products.

Packaging alone cannot prevent lipid oxidation, but no product can be stabilized against lipid oxidation without appropriate and effective packaging. By providing barriers against oxygen, light, and moisture, packaging works in concert with endogenous antioxidants to limit the total radical load in foods, cosmetics, and other products so that primary antioxidants can be more effective at lower concentrations; these barriers also provide an environment that greatly slows down radical reaction chains that do become established. New active packaging that delivers radical scavengers, metal chelators, and singlet oxygen quenchers offer unique opportunities for tailoring packaging to individual product compositions and increasing antioxidant effectiveness. Combining barrier and delivery properties of packaging provides flexible options for protecting product quality and significantly extending shelf life.

BIBLIOGRAPHY

1. T. P. Labuza, "Kinetics of Lipid Oxidation in Foods," *CRC Crit. Rev. Food Sci. Nutr.* **2**, 355–405 (1971).
2. K. M. Schaich, "Lipid Oxidation in Specialty Oils" in F. Shahidi, ed., *Nutraceutical and Specialty Oils*, Marcel Dekker, New York, 2005, pp. 401–448.
3. J. L. Bolland, *Quaert. Rev.* **3**, 1–21 (1949).
4. Kaya et al., *Lebensm. Wiss. Technol.* **26**, 464–468 (1993).
5. T. P. Labuza et al., *Food Technol.* **24**, 543–544, 546–548, 550 (1970).

Selected References for General Background on Lipid Oxidation Processes

W. O. Lundberg, ed., *Autoxidation and Antioxidants*. Vol. 1 and 2, Interscience, New York, 1961.

G. Scott, *Atmospheric Oxidation and Antioxidants*, Elsevier, London, 1965.

H. W.-S. Chan, *Autoxidation of Unsaturated Lipids*, Academic Press, London, 1987.

E. N. Frankel, "Volatile Lipid Oxidation Products," *Prog. Lipid Res.* **22**, 1–33 (1982).

E. N. Frankel, "Lipid Oxidation: Mechanisms, Products, and Biological Significance, *J Am. Oil Chem. Soc.* **61**, 1908–1917 (1984).

E. N. Frankel, "Chemistry of Free Radical and Singlet Oxidation of Lipids," *Prog. Lipid Res.* **23**, 197–221 (1985).

N. A. Porter, "Mechanisms for the Autoxidation of Polyunsaturated Lipids," *Acct. Chem. Res.* **19**, 262–268 (1986).

E. N. Frankel, "Secondary Products of Lipid Oxidation," *Chem. Phys. Lipids* **44**, 73–85 (1987).

J. P. Cosgrove, D. F. Church and W. A. Pryor, "The Kinetics of the Autoxidation of Polyunsaturated Fatty Acids," *Lipids* **22**, 299–304 (1987).

J. C. Allen and R. J. Hamilton, *Rancidity in Foods*, 2nd edition, Elsevier Applied Science, London, 1989.

H. W. Gardner, Oxygen radical chemistry of polyunsaturated fatty acids, *Free Radic. Biol. Med.* **7**, 65–86 (1989).

N. A. Porter, S. E. Caldwell, and K. A. Mills, “Mechanisms of Free Radical Oxidation of Unsaturated Lipids,” *Lipids* **30**, 277–290 (1995).

K. M. Schaich, “Free Radical Initiation in Proteins and Amino Acids by Ionizing and Ultraviolet Radiations and Lipid Oxidation—Part III: Free Radical Transfer from Oxidizing Lipids,” *CRC Crit. Rev. Food Sci. Nutr.* **13**, 189–244 (1980).

K. M. Schaich, “Metals and Lipid Oxidation: Contemporary Issues,” *Lipids* **27**, 209–218 (1992).

K. M. Schaich, “Lipid Oxidation in Fats and Oils: An Integrated View” in F. Shahidi, ed., *Bailey’s Industrial Fats and Oils*, 6th edition, John Wiley & Sons, New York, 2005, pp. 2681–2767.

E. N. Frankel, *Lipid Oxidation*, 2nd edition, The Oily Press, PJ Barnes & Associates, Bridgewater, UK, 2005.

References for Specialty Packaging Approaches

M. L. Rooney, *Active Food Packaging*; Blackie Academic & Professional, New York, 1995, p. 260.

A. L. Brody, E. R. Strupinsky, and L. R. Kline, *Active Packaging for Food Applications*, Technomic Publishing: Lancaster, PA, 2001.

LIQUID-CRYSTALLINE POLYMERS, THERMOTROPIC

Robert R. Luise
Hytem Consultants, Inc.
Boothwyn, Pennsylvania

Main-chain thermotropic or melt-processible liquid-crystalline polymers (TLCPs) are a class of high-performance condensation polymers represented mainly by *para*-extended aromatic polyesters (1). Although these polymers were invented in U.S. industrial research laboratories in the 1970s, development was inhibited until the 1980s by high monomer costs and the lack of attractive markets. With the emergence of a market niche in molded electronics packaging and enhanced prospects for lower monomer costs, rapid 20–25% annual growth of the TLCP market currently estimated at 10–15 million lb is projected for the remaining 1990s (2).

TLCP property advantages include high thermal, electrical, and solvent resistance combined with exceptional flow (low-melt viscosity) in the 300°C (572°F) range, precision moldability, and dimensional stability; these features are ideal for injection-molded, close-tolerance applications such as thin-walled electrical connectors that constitute about 90% of the present market. In film form, the dense uniaxial LC morphology affords excellent barrier properties, but development in packaging applications has been inhibited by high resin costs and the need for special technology to prepare balanced film. With lower resin costs and recent progress in balanced and coextruded film technology, most notably using counter-rotating dies (3), medical and food-packaging applications are expected to emerge rapidly. In addition, the unique post-heat-strengthening capability of these materials by solid-phase polymerization of the final part results, for example, in high-strength fibers with the mechanical properties of Kevlar aramid fiber (4).

FUNDAMENTALS

TLCP chemistry is relatively simple and involves reaction of an acetylated aromatic diol with an aromatic dicarboxylic acid, as illustrated in Figure 1. The diol is usually acetylated *in situ* with acetic anhydride at 150–200°C (300–392°F) under nitrogen in the presence of the diacid, and the melt polymerization finished under vacuum at higher temperatures (300°C, or 572°F range) over a period of several hours. Acetic acid is the principal reaction byproduct. Principal monomers used in commerical materials shown in Figure 2 are *para*-oriented, phenyl or naphthyl rings preferred, but a certain amount (≤ 40 mol%) of non-*para* or “soft” comonomers (e.g., isophthalic acid, ethylene glycol) can be tolerated without destroying liquid crystallinity. Other linkages or colinkages are also feasible, e.g., ester–amide, ester–imide, carbonate, and azomethine, but the predominant linkage is ester.

The rodlike character of the extended chain molecules results in a preference for parallel packing in the melt,

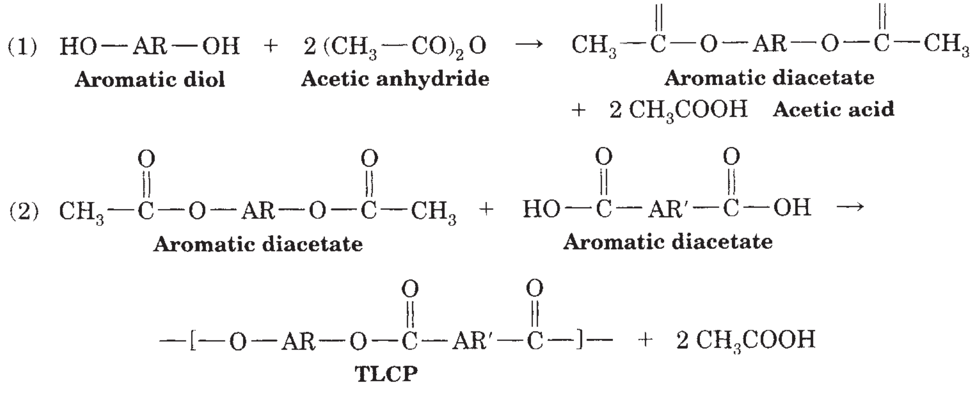

$$(1)\quad \underset{\textbf{Aromatic diol}}{\mathrm{HO{-}AR{-}OH}} + \underset{\textbf{Acetic anhydride}}{2\,(\mathrm{CH_3{-}CO})_2\,\mathrm{O}} \rightarrow \underset{\textbf{Aromatic diacetate}}{\mathrm{CH_3{-}\overset{O}{\overset{\|}{C}}{-}O{-}AR{-}O{-}\overset{O}{\overset{\|}{C}}{-}CH_3}} + 2\,\mathrm{CH_3COOH}\ \textbf{Acetic acid}$$

$$(2)\quad \underset{\textbf{Aromatic diacetate}}{\mathrm{CH_3{-}\overset{O}{\overset{\|}{C}}{-}O{-}AR{-}O{-}\overset{O}{\overset{\|}{C}}{-}CH_3}} + \underset{\textbf{Aromatic diacetate}}{\mathrm{HO{-}\overset{O}{\overset{\|}{C}}{-}AR'{-}\overset{O}{\overset{\|}{C}}{-}OH}} \rightarrow$$

$$\underset{\textbf{TLCP}}{\mathrm{{-}[{-}O{-}AR{-}O{-}\overset{O}{\overset{\|}{C}}{-}AR'{-}\overset{O}{\overset{\|}{C}}{-}]{-}}} + 2\,\mathrm{CH_3COOH}$$

Figure 1. Melt polymerization.

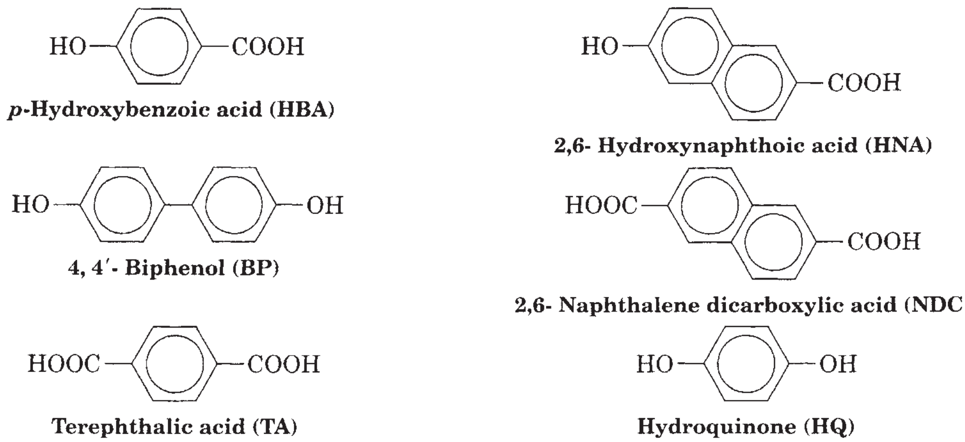
p-Hydroxybenzoic acid (HBA)

2,6- Hydroxynaphthoic acid (HNA)

4, 4′- Biphenol (BP)

2,6- Naphthalene dicarboxylic acid (NDC)

Terephthalic acid (TA)

Hydroquinone (HQ)

Figure 2. TLCP monomers.

driven by entropy, much like "logs in a stream." Packing occurs in the form of optical-size birefringent domains that contain uniaxially oriented polymer chains, which are randomly oriented with respect to one another. At flow conditions, the domains easily orient with respect to each other, which frequently results in anisotropic properties in the final part. This result can be an advantage in some structural materials (e.g., fibers), but a disadvantage in others that require balanced properties (e.g., films). Differences in flow behavior of liquid crystalline and conventional or flexible chain polymers are illustrated in Figure 3. This type of simple uniaxial ordering is referred to as a "nematic" *meso*phase in LC terminology and is predominant for TLCPs. The use of optically active comonomers can also lead to chiral stacking of domains and the "cholesteric" mesophase in the melt (5).

COMMERCIAL SOURCES

Major commercial TLCPs include Vectra (Hoechst-Celanese), Xydar (Amoco), and Zenite (DuPont). All are high-temperature aromatic polyesters with heat-distortion temperatures in the 240–270°C (464–518°F) range and are glass-filled, geared mainly to injection-molded applications in electronics. Vectra is a 73/27 copolymer of *p*-hydroxybenzoic and hydroxynaphthoic acids, Xydar a 50/25/25 copolymer of *p*-hydroxybenzoic acid, 4,4′-biphenol and terephthalic acid (and optionally a small amount of isophthalic acid) developed initially by Carborundum in the 1970s and Zenite, an all-aromatic polyester. Vectran is a high-performance TLCP fiber based on the Vectra composition manufactured by Kuraray in Japan under license from Hoechst-Celanese. Worldwide capacity of these materials is estimated at 15–20 million lb; Hoechst-Celanese/Polyplastics and DuPont have recently announced new plants in Japan and Tennessee, respectively, onstream in 1995. Rodrun, a lower-temperature TLCP based on PET (20–40%) and *p*-hydroxybenzoic acid developed initially by Eastman in the 1970s, is also available in limited quantities from Unitika–Japan.

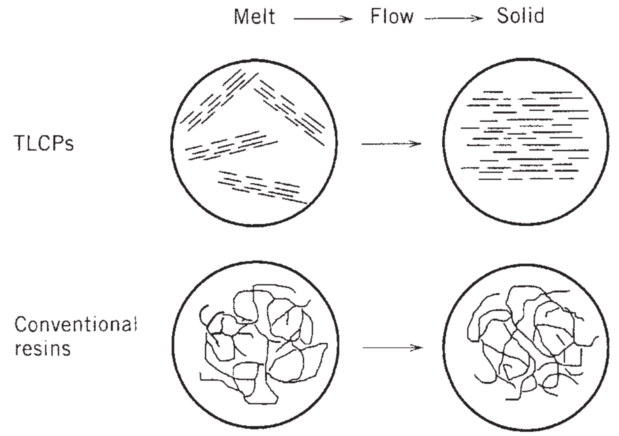

Figure 3. Flow behavior of TLCPs versus conventional resins.

TLCP cost is presently high: \$5–\$11/lb for glass- or mineral-filled molded grades and \$12–\$22/lb for extrusion grades; resin cost, however, is expected to approach the \$3–\$5/lb range over the next several years (2), which results lower prices projected for key monomers such as 2,6-naphthoic acid, also a monomer for PEN and now available from Amoco at \$1.50/lb, and economies-to-scale price reductions expected for *p*-hydroxybenzoic acid (to \$1.00/lb range from \$2.50/lb present) and 4,4′-biphenol (to \$2.00/lb from \$5–\$7/lb).

FILMS

Processing. TLCP ease-of-flow orientation results in unbalanced films with poor lateral properties by conventional film extrusion that are generally not poststretchable. Kuraray has reported reasonably balanced Vectra-type films by conventional film blowing at high shear rates (6), but the best results have been obtained by Superex, which uses a combination of film-blowing and counter-rotating extrusion dies (3). In the latter case the annular die consists of counter-rotating inner and outer mandrels that impart an opposing biaxial or "crisscross" orientation to the respective inner and outer film surfaces. Stretch is controlled by gas blown through the center and attenuation/takeup

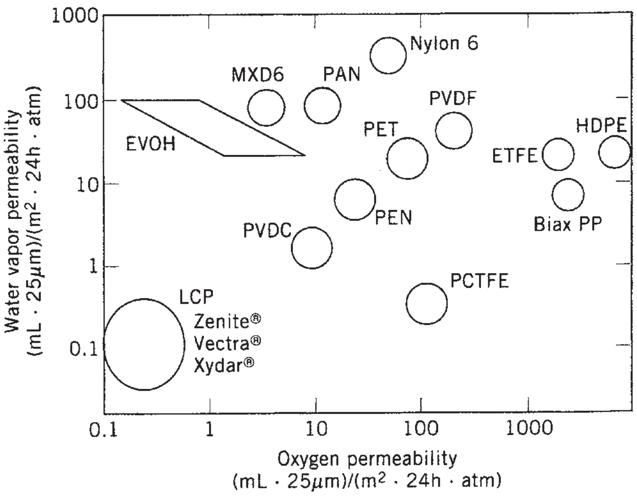

Figure 4. Permeability of selected polymer films. (Courtesy of Superex Polymer, Inc.)

speed. The latter technology, also applicable to tubing, is available from Superex by special licensing. Another approach reported in patents by Nippon Oil involves conventional extrusion of cholesteric TLCP film with improved property balance through the use of chiral (optically active) comonomers that results in a biaxial twist or chirality to the morphology in the film plane (7).

Properties. TLCP films generally possess exellent permeability resistance to gases (e.g., oxygen, water vapor, and carbon dioxide), which is attributed to the highly compact uniaxial morphology. A comparison of permeability of various polymer films in Figure 4 illustrates the unique barrier resistance of TLCPs to both oxygen and water vapor, which far exceeds other packaging resins. Film studies attribute low permeability to low solubility indicative of a highly ordered substrate (8); moderate reductions in oxygen permeability were observed (9) with orientation (45%) and solid-phase polymerization (10–20%). Larger reductions in oxygen permeability (200–300%) have been observed by Kuraray in studies of aliphatic—aromatic TLCPs based on PET and PEN copolymers with HBA and HNA (10), whereby permeability is found to decrease with increasing naphthyl (vs phenyl) content, probably due to decreased solubility. These partially aliphatic materials also were found to be poststretchable biaxially and, in some cases, transparent. Wholly aromatic TLCP films (e.g., Vectra), in contrast, are not poststretchable and are opaque, except in the case of ultra-high-oriented ("monodomain") film prepared from uniaxial layups of TLCP fiber (11).

Applications. A comparison of the general properties of balanced TLCP Vectra film with other high-performance polyester (PET, PEN) and polyimide (Kapton, Upilex) films is shown in Table 1. In contrast to polyimide, TLCP appears to offer similar high-temperature and electrical properties with lower moisture absorption and lower cost, for electrical applications in flexible-film substrates. Compared to polyester, TLCP offers higher thermal, mechanical, and barrier properties for medical and food-packaging applications that require sterilizing, retorting and long shelf life. In the latter case, even at a resin cost of $20/lb, TLCP offers about five times better cost-barrier performance (oxygen, water vapor) vs PET and PEN, assuming resin costs of $1 and $4/lb for the latter polymers (12).

Also noted is the high-use temperature capability of TLCP film [~200°C (~392°F)] despite relatively low glass temperature [110–125°C (230–255°F)], attributed to the crystalline uniaxial morphology. TLCPs with glass temperatures in the 200°C (392°F) range that may have future application in packaging have recently been disclosed (13).

A TLCP drawback has been the lack of availability of balanced film in the marketplace, but this may change very soon. Superex has recently announced a number of consortium activities targeted for the marketplace, which include development of a copper-clad balanced film for electronics multilayer circuit boards and multichip modules (14), and coextruded TLCP and PET film and tubing for electronics, medical, and food applications that require high temperature [205°C (400°F)] resistance (15). The latter features a tie layer, probably of a PET/TLCP blend, to improve heat-sealing and formability. A one million-pound production level is expected by 1997 and cost will be competitive with EVOH and PVDC. A possible application is a shelf-stable, retortable food tray. Superex also has

Table 1. Properties of Balanced Films

	Vectra TLCP	PET(ICI) MD/TD	Kaladex PEN	Kapton PI	Upilex S PI
Tensile strength, MPa	345	165/228	220	90	413
Tensile modulus, GPa	8.3	4.1/4.8	6.0	2.6	8.9
T_g/T_m, °C	110–125/280	72/269	120/262	385/none	>500/none
Upper use temperature, °C	180–200	130	150	200	260
CTE, ppm/C	−5 to +9	23/18	20	22	2.6
Moisture absorption, %	0.02	<0.1		2.1	1.0
Solvent resistance	Excellent	Good	Good	Good	Excellent
Relative permeation, O_2/H_2O	1/1	100/100	25/30		
Dielectric constant at 1 kHz	3.3	3.2		3.4	3.5
Dissipation factor at 1 kHz	0.003	0.005		.002	0.0013
Resin/film price, $/lb	12–22/44	1/2–6	4/10–19	–/55	–/60

Source: Courtesy of The PST Group.

announced consortium development of a PET/TLCP alloy with twice the oxygen- and moisture-barrier resistance of PET at 10% TLCP loading (16). Flexible-to-rigid monolayer or coextruded packaging that is both recyclable and reusable should be feasible. Projected price is $3/lb with up to 50% package downgauging possible. A key to the PET alloy technology is the preservation of the TLCP barrier phase using special compatibilizers to control ester interchange. In addition to film packaging, Superex TLCP biaxial tubing is now being manufactured under license by ACT Medical for endoscopic surgical instruments (17). Advantages include five times higher stiffness vs conventional tubes and 50% cost savings over fiber-reinforced composite tubes. Superior electrical properties and broad sterilization capabilities are also exhibited. Superex' biaxial TLCP tubing was a 1995 Award Winner selected by *R&D Magazine* as one of the top 100 technologically significant products of the year.

Neste Oy (18) has also announced development of coextruded LDPE/TLCP barrier film based on a new low-melting TLCP [210–260°C (410–500°F)] with heat-distortion temperature of 148°C (300°F). The blend includes a compatibilizer to improve heat sealing and processibility. Multilayer coextruded and paper-coated constructions with LDPE have been prepared by conventional processing. Special biaxial processing is not required, apparently because films are less anisotropic because of the higher flexibility of the TLCP (perhaps due to aliphatic linkages). Three- and five-layer constructions with LDPE far exceed oxygen-barrier cost performance of similar PET constructions and are competitive with those of EVOH, with the added advantage of recyclability. The LDPE/TLCP materials are intended as EVOH and aluminum-foil replacement, particularly in aseptic packaging.

SUMMARY

TLCPs are a class of high-performance engineering polymers represented mainly by aromatic copolyesters with exceptional processibility and high thermal, electrical, and barrier properties. About 90% of the present TLCP market of 10–15 million lb consists of injection-molded electronics connectors, but rapid development of biaxial film and tubing technology (Superex) and coextruded films and blends with conventional packaging resins (e.g., PET, PEN and LDPE) should expand opportunities near-term to applications in electronics, medical, and food packaging. With resin costs expected to drop to the $3–$5/lb range over the next several years because of reduced monomer costs, rapid 20–25% annual growth is forecast for the remaining 1990s to a 40–50-million-lb market by the year 2000. It is expected that food and medical packaging will constitute a significant share of this market driven by improved thermal stability, longer shelf life, and ease of recycling afforded by TLCPs.

BIBLIOGRAPHY

1. W. J. Jackson, Jr., *Br. Polym. J.* 154–162 (1980).
2. D. J. Williams, "Applications and Markets for Thermotropic Liquid Crystalline Polyesters (TLCPs)," paper presented at Conference on High Temperature Polymers, Executive Conference Management, Clearwater Beach, FL, Feb. 20–21, 1995; in *Applications of High Temperature Polymers*, R. R. Luise, ed., CRC Press, Boca Raton, FL, 1996.
3. *Plast. Technol.*, 35 (1991).
4. R. R. Luise, "Advances in Heat-Strengthened Thermotropic Liquid Crystalline Polymer Materials," in *Polymeric Materials Encyclopedia*, J. C. Salamone, ed., CRC Press, Boca Raton, FL, 1996.
5. E. Chiellini and G. Gallo, "Chiral Thermotropic Liquid Crystal Polymers," in *Recent Advances in Liquid Crystalline Polymers*, L. Chapoy, ed., Elsevier, London, U.K. 1985.
6. EP Patent Appl. 346 926 (Dec. 20, 1989), T. Ishii and M. Sato (to Kuraray).
7. U.S. Patent 4,698,397 (Oct. 6, 1987) and U.S. Patent 4,891,418 (Jan. 2, 1990) T. Toya et al. (to Nippon Oil).
8. J. S. Chiou and D. R. Paul, *J. Polym. Sci., B, Polym. Phys.* **25**, 1699 (1987).
9. D. H. Weinkauf and D. R. Paul, *J. Polym. Sci., B. Polym. Phys.* **30**, 817 (1992).
10. EP Patent Appl. 466 085 (Jan. 15, 1992), T. Kashimura and M. Matsumoto (to Kuraray).
11. R. R. Luise, "Liquid Crystalline Condensation Polymers," in *Integration of Fundamental Polymer Science and Technology*, Vol. 5, P. J. Lemstra and L. A. Kleintjens, eds., Elsevier, London, U.K. 1990.
12. M. A. Kirsch and D. J. Williams, "Understanding the Thermoplastic Polyester Business," *Chemtech*, **40** (1994).
13. WO Patent Appl. 94/28069 (Dec. 8, 1994), R. R. Luise (to DuPont).
14. T. Knoll, "Controlled Thermal Expansion Printed Wiring Boards on TLCP Dielectrics," *Technical Conference Proceedings*, IPC, Boston MA, April 1994.
15. *Plast. Technol.*, **104** (1994).
16. *Modern Plast.*, **25** (1995).
17. R. W. Lusignea, "Fabrication of LCP Tubing for Medical Applications," paper presented at Specialty Polyesters '95, Schotland Business Research, Brussels, Belgium, June 27–28, 1995.
18. T. Heiskanen and E. Suokas, "A New Low Processing Temperature LCP with High Mechanical Properties and Suitability for Blending," paper presented at Specialty Polyesters '95, Schotland Business Research, Brussels, Belgium, June 27–28, 1995.

LOGISTICAL/DISTRIBUTION PACKAGING

DIANA TWEDE
School of Packaging, Michigan
State University, East Lansing,
Michigan

The two key drivers of logistics management are the goals of reducing the total cost of logistics activities and improving customer service. It aims to integrate the supply chain to eliminate waste and optimize service.

Logistics Management is defined as "that part of supply chain management that plans, implements, and controls the efficient, effective forward and reverse flow and storage of goods, services and related information between the point of origin and the point of consumption in order to meet customers' requirements…. Logistics management is an integrating function that coordinates and optimizes all logistics activities, as well as integrates logistics activities with other functions" (1).

Logistical packaging is more than just cartons, crates, and corrugated board (2). Also known as *distribution packaging* and *packaging logistics*, it focuses on the "interaction and relationship between the logistical system and the packaging system that add value to the combined, overall, system—the Enterprise" (3).

Packaging affects the cost of every logistical activity and has a significant impact on the productivity of supply chains. Transport and storage costs are directly related to the size and density of packages. Handling cost depends on unit-loading techniques. Inventory control depends on the accuracy of manual or automatic identification systems. Customer service depends on the protection afforded to products as well as the cost to unpack and discard packing materials. And the packaging postponement/speculation decision affects the cost of the entire logistical system. An integrated logistics approach to packaging can yield dramatic savings.

Logistical packaging facilitates product flow during manufacturing and distribution. Logistical packaging includes shipping containers for consumer goods (which are almost always also in consumer packages), industrial packaging for factors of production ranging from automobile parts to food ingredients, and institutional packages. There is also a packaging aspect to vehicle loading and unloading, as well as to intermodal containerization. Every factory and/or logistical operation receives and ships logistical packaging; most operations unpack, reconfigure, and repack products, as well as purchase and dispose of packaging materials.

This article deals with the role of packaging in the logistics systems of supply chains. Readers who seek more general information about logistics and supply chain management are referred to texts in the field (4–8).

LOGISTICAL PACKAGING FORMS

Since the early 1900s, common carriers in the United States have tried to "regulate" the packages they transport. The American Association of Railroads and the American Trucking Association publish packaging material "requirements" in their freight classification books. Most of the requirements were developed with the help of the Fibre Box Association (or its predecessors) and use more corrugated fiberboard material than may be required for adequate performance (2).

The justification for these requirements has been that carriers are responsible for paying in-transit damage claims. One of the carriers' common law liability defenses is "an act of the shipper," including insufficient packaging, and carriers have tried to maintain that only the packages in the "Classification" are "sufficient."

These requirements have traditionally been a barrier to packaging innovation. The existence of the "Cardboard Rules" has caused many firms to make logistical packaging simply a purchasing responsibility, rather than an area for proactive management (9).

The barrier has fallen; however; since transportation was deregulated in 1980, carriers have been able to exercise much less control over logistical packaging. After all, carriers are responsible only for in-transit damage, and there are nonapproved packages that are at least as protective as those in the Classification.

The logistical channel members who buy, own, and sell products have a much bigger stake in preventing damage and controlling other packaging-related costs. The underlying logic of integrated logistics management is the ability to control such systemwide costs.

Furthermore, transportation deregulation has caused less freight to be subject to common carriers' packaging rules since much less freight pricing is governed by the Classification and more contracts are negotiated. More freight today is shipped by full truckload, never handled by the carriers' workers, and is therefore less subject to abuse in transit. Today, the Classification "Cardboard Rules" apply only to less-than-truckload (LTL) common-carrier freight. And even LTL carriers will accept a packaging exception to the rules if it is certified as passing a series of performance tests (10).

This loosening of "rules" has triggered a renaissance in logistical packaging. Shippers are questioning traditional packaging materials and forms and are experimenting with new, less costly packaging systems. For example, some appliance shippers have reduced the cost of their packaging by 50%, by replacing corrugated fiberboard with film-based (shrink- or stretch-wrap) packaging systems. Some furniture manufacturers have reduced their package purchase and disposal costs to almost nothing by utilizing "blanket wrap" (moving van) trucking service. Assembly companies have switched from expendable to reusable packaging. These innovations have also been shown to dramatically reduce damage (11).

Most of the new packaging systems are simple variations of traditional packaging forms, using traditional materials in new and innovative ways. They all have two things in common: They are tailored to perform for specific products and logistical systems, and they minimize packaging purchase and solid-waste disposal costs.

The traditional logistical packaging materials and forms are

- Wood pallets, crates, blocking, and bracing
- Corrugated fiberboard boxes, dividers, inserts, and dunnage
- Solid fiberboard slipsheets and boxes
- Plastic and multiwall paper bags and drums
- Intermediate bulk containers, bulk bags
- Steel cans, pails, drums, and straps
- Steel racks and cages
- Fabric (burlap and woven plastic) bags and blankets
- Plastic film shrink wrap and stretch wrap
- High-density plastic boxes, slipsheets, and pallets
- Blanket-wrapping, decks, and restraints

- Plastic strapping
- Plastic foam cushioning and dunnage for fragile or irregular shapes

Descriptions, properties, and specifications of most of these materials can be found elsewhere in this Encyclopedia.

LOGISTICAL PACKAGING PERFORMANCE

Logistical packaging only adds value because it functions in a logistical system to provide protection, utility, and communication. Performance specification and value analysis, which can be used to guide packaging innovation, employ a functional approach.

The amount of protection that a package must provide depends on the characteristics of the product and conditions in the logistical system. The relationship can be conceptualized as

$$\text{Product characteristics} + \text{logistical hazards} = \text{package protection required}$$

Damage is a symptom of a system out of adjustment, resulting from product problems, handling problems, or packaging problems. Packaging is generally responsible for the product quality that is maintained after the name goes on.

The relevant *product characteristics* are those that can be damaged during distribution. Examples include the propensity of food to deteriorate as a result of temperature, oxygen, or moisture; the tendency for furniture to rub during transit vehicle vibration; and the fragility of products and packages that can break when dropped during material handling operations.

The *hazards of a logistical system* depend on the types of transportation, storage, and handling used. For example, full truckload (TL) transportation generally causes less damage than less-than-truckload (LTL) transportation where packages are handled repeatedly during transloading operations and have many more chances to be dropped or loaded beneath or beside damaging cargo. Railroad shipment often incurs damage as a result of railroad switching and coupling operations.

The hazards of international transportation range from flatbeds to bikecarts. Intermodal containerization for international shipment has reduced impact and moisture damage, compared to “breakbulk” shipping. But even when products are shipped containerized, they will probably be handled in a breakbulk operation inland overseas for which they require adequate packaging performance.

In general, moisture protection and protection from oxidation are obtained by using barrier materials—which keep water and water vapor, oxygen, and other destructive contaminants away from the product, and conserve flavor components in food—or by enclosing desiccant or oxygen-absorbing packets. Shelf life can be lengthened by the use of barrier materials and/or controlling the atmosphere inside food packages. Temperature protection requires insulated containers.

Protection against impacts can be obtained through the use of cushions for shock-sensitive products. Protection to prevent impacts from bursting a package wall requires improving the walls’ tensile strength and puncture resistance. To prevent products from shifting during railroad switching and coupling impacts or as an intermodal container is placed onto or removed from a flatbed railcar, trailer chassis, or ship, loads are blocked and braced to the boxcar or container floor (12–14).

A basic rule for improving protection against impacts, vibration, and compression is to always pack products tightly so there is no headspace, no room to rattle, and a shared reliance on box walls for stacking strength. Vibration or abrasion protection may also require changing package surface or spring–mass characteristics. To improve stacking, compression strength may need to be added to the package walls.

The relative protectiveness of alternative packaging systems can be evaluated and compared in laboratory and field tests. Standardized tests are available from the ASTM International and the International Safe Transit Association (ISTA), which can be used to develop more specialized tests to evaluate specific properties. The best tests target the package’s specific damage characteristics (e.g., bags’ ends burst in side drops) and provide a measure of the difference between alternative packages’ performance (how much energy is required to burst), rather than simple pass/fail tests.

The more liable the product is to damage and the more hazardous the logistical system’s operations, or the higher the cost of damage, the more packaging protection is required. It is important to note, however, that the amount of protection is not directly related to the cost of packaging. In most cases it is possible to improve protection and reduce packaging cost at the same time by simply choosing more appropriate materials and methods. For example, the U.S. Food for Peace program has been able to reduce the number of paper piles in multiwall bags and improve protection by simply changing the bag sealing method.

Accurate measurement of damage can provide the most valuable information for directing attention to problems. But packaging decisions regarding damage prevention are often made without sufficient information. Typical reports of damage problems are unspecific as to the amount, types, and causes. It is difficult to quantify costs for damage, because they are scattered among firms in a logistical system (15). Since carriers are (to the extent of their contract) responsible for the damage they cause, documented in-transit damage claims are the first place to look for damage trends (16). Damage that is caused by wholesalers and retailers is more elusive, and their cooperation is required to report and evaluate losses.

In order to reduce waste, improve customer service, and control packaging costs, some firms have developed systems to track and manage product quality during distribution (17). Such logistics quality-control systems resemble systems for managing product quality during manufacturing and include the following steps:

- Setting standards for critical defects
- Appraising conformance to standards, including

- Monitoring and collecting data (e.g., electronic data interchange)
- Reporting and evaluating data (Pareto analysis)
- Corrective action (modify the package, product, or handling

Once a firm knows about its logistical damage, it can target initiatives where they will do the most good. For example, some furniture companies target specific packages and products for improvement when damage quantity and/or costs are higher than normal (18). Initiatives may include changing the product, changing the logistical hazards, or changing the package. Specific information about damage is particularly useful when developing package tests and performance levels for alternative packages. For example, some food manufacturers have learned that a most common source of damage is box-cutter damage. In response, they have developed easy-open display-ready packages (19).

In many cases, it costs much less to reduce the hazards than to "improve" the packaging. Examples include

- The use of refrigerated transportation and storage to protect fresh produce
- The use of storage racks in warehouses to prevent compression damage
- Good sanitation practices during distribution to reduce the need for packaging to prevent vermin infestation.

In other cases, the lowest-cost solution is to design products to better survive shipment hazards. Product design changes range from reducing fruit bruising through genetic modification, to improving the impact resistance of an electronic product's circuit-board fasteners. An impact-resistant product requires little cushioning, which minimizes cube and trash, and is more reliable in use than a fragile product.

Packaging must also protect people in the logistical system from injury and accidents. Workers' ergonomics and safety problems can be solved through better packaging, especially since there are so many possibilities for injury while working with packages. Routine package handling can be linked to chronic stress injuries, and material-handling accidents can kill people.

Routine manual handling of packages has always been taken for granted, but it is traditionally the source of many back injuries. OSHA guidelines answer the question "How heavy should manually handled packages be?" with an answer that depends on how far and how often the lifting is done. For example, for "continuous high-frequency lifting, variable tasks," such as manual receiving operations, weights below 17 lb are acceptable and represent nominal risk, weights between 17 and 50 lb are acceptable only with administrative or engineering controls, and packages weighing over 50 lb are unacceptable (20).

Accidents happen. Personal-injury lawsuits involving packaging materials and methods are increasing. The liability judgment generally depends on whether the accident could have been foreseen and whether adequate packaging and training procedures were followed. For example, when a long-shoreperson is injured by a bag that slips from a stack, the fabric is accused of not complying to standards, the unit-loading technique is examined (maybe it should have been stretch-wrapped), and the port practices are questioned. It is especially important for firms to evaluate packages that are involved in previous accidents, in order to prevent future occurrences.

The packaging function of utility relates to how packaging affects the productivity and efficiency of logistical operations. All logistical operations are affected by packaging utility—from truckloading and warehouse-picking productivity, to transportation and storage cube utilization, to customer productivity and packaging waste reduction.

Productivity is the ratio of real output to real input:

$$\text{Productivity} = \frac{\text{number of packages output}}{\text{logistics input}}$$

Logistical productivity is the ratio of the output of a logistical activity (like loading a truck) to the input (like labor and forklift time required). Most logistical productivity studies center around making the input, particularly labor, work harder.

But packaging unitization and size reduction initiatives easily increase the output of logistical activities. Almost all logistical activity outputs are described in terms of number of packages. Some examples include number of cartons loaded per hour into a trailer, number of packages picked per hour at a distribution center, and number of packages that fit into a cubic foot (ft^3; "cube utilization") of vehicle or warehouse space (21). Testing alternative packages for their logistical efficiency is a simple matter of productivity measurement.

For example, palletization and/or unitization improves the productivity of most handling operations. Warehouse-order-picking productivity can be improved by making packages easy to find and recognize, by packing items in order picking quantities (e.g., dozens), and by making it easy to repack the heterogeneous order.

Cube utilization can be improved by reducing package size. Package size can be reduced by concentrating products (e.g., orange juice and fabric softener) or by eliminating space inside packages by shipping items unassembled, nested, and with minimal dunnage. In most cases, the amount of dunnage materials (e.g., expanded polystyrene loose-fill) can be minimized simply by reducing box size. Experts believe that improving cube utilization is packaging's greatest opportunity and predict that, in general, packaging cube can be reduced by 50%, doubling transportation efficiency.

Cube minimization is most important for lightweight products (like assembled furniture) that "cube out" a transport vehicle far below its weight limit. Trailer sizes vary; most in the United States are 53 ft long, with inside dimensions of 52.5 ft × 99 in. × 98 in. (high cube trailers are 108 in. tall); and cargo weight limits are generally about 40,000 to 44,000 lbs depending on the weight of the vehicle itself. On the other hand, heavy products (e.g., liquid in glass bottles) “weigh out” a transport vehicle before it is filled. Weight can be reduced by changing the product or the package. For example, substituting plastic bottles for glass significantly increases the number of bottles transported in a trailer.

Packaging utility also depends on the compatibility of packages with pallets and other material-handling equipment used in a logistical system. Pallet-load efficiency can be improved by designing shipping containers to better fit the footprint: Most grocery pallets in the United States are 48” × 40”; most in Europe are 1200 mm × 800 mm. There are efforts underway to implement a compromise standard of 1200 mm × 1000 mm. In some logistical systems, especially internationally, pallets are not used, and packages may need the ability to be efficiently manually handled (or by the longshoreperson’s hook) repeatedly.

Packaging can also add utility for logistical customers. The cost of unpacking is seldom considered by the firm that packs products. But easy-opening features improve retailer’s direct product profitability by reducing customers’ costs of opening and displaying or installing products.

Packaging disposal is also borne by logistical customers. Besides the environmental impact, logistical packaging trash disposal costs money and can severely reduce a customer’s productivity, particularly in nations such as Canada and Germany, which have enacted legislation to reduce packaging waste.

Packaging solutions to disposal problems include reducing, reusing, and recycling. Reduction of packaging also saves on packaging purchase costs. Packaging reuse generally adds some costs for sorting and return transportation. Recycling is growing in more widespread use and gaining popularity, thus reducing costs and increasing markets.

Recycling is a good disposal method for most logistical packaging waste, since logistical packaging waste naturally collects in large heterogeneous piles. Manufacturers, warehouses, and retailers discard large amounts of pallets, corrugated fiberboard, polyethylene film, plastic foam, and strapping. Recyclers appreciate such concentrated and relatively clean sources (compared to sorting and cleaning curb-side and food-service wastes). Likewise, purchasing packages made from recycled material encourages the growth of a recycled products market and infrastructure. Recycling is sometimes called “reverse logistics” (22).

One of the most popular trends is the use of more *reusable/returnable packaging* for products such as assembly parts, food ingredients, and snack chips, from retail warehouse to store totes and intraplant shipments. Most reusable packages are steel or plastic; some firms reuse corrugated fiberboard boxes and pallet boxes. There are also flexible reusable systems: blanket-wrapping and intermediate bulk containers such as bulk bags.

The growing reusable packaging applications all have one thing in common: a short vertical marketing system. A vertical marketing system (as contrasted to a “free-flow” marketing system) is one in which the primary participants are either corporate ownership, contracts, or administration under the control of one firm (23).

A vertical marketing system is important because of the need to control the movement of returnable containers and the need to share the investment benefits. All partners in a returnable system must cooperate to maximize container use, and an explicit relationship is required for coordination and control. Otherwise, containers are easily lost or misplaced. Alternatively, deposit systems may be necessary in free-flow marketing systems (like groceries), where the channel members are linked only by transactions. Deposit systems have been used for beverage bottles, pallets, and steel drums.

The shipment cycle should be short, in terms of time and space, in order to minimize the investment in the container “fleet” and to minimize return transportation costs. The size of the investment depends on the number of days in the cycle.

Deciding to invest in a returnable-packaging system is a very different task from purchasing “expendable” containers. The decision involves considering explicit relevant costs—purchase cost, including number of packages in the cycle, and transport cost—versus the purchase and disposal cost of expendables. Intangible benefits such as improved factory housekeeping, improved ergonomics, and decreased damage are often considered. Generally, there are a number of unexpected costs, including sorting, tracking, and cleaning. Most financial analysis of returnable systems has been limited to “payback period” justification rather than net present value calculations, which would demonstrate the strategic and profit potential of a returnable-packaging system investment.

The efficiency of the logistics system that returns containers or pallets to use determines the cost as well as the environmental sustainability (24). Most logistical systems for reusable packaging use a shared pool system, rather than a strict one-for-one return. These can be owned by the supply chain, rented from third parties or traded in a free market (such as the market for used wooden pallets) (25).

The function of communication is becoming more important for logistical packaging, as logistical management information systems become more comprehensive. For all practical purposes, the package symbolizes the product throughout logistical channels. Correct identification of stock-keeping units (including name, brand, size, color), counting, special shipping instructions (e.g., “Hazardous”), and address are critical to quality logistical information management. International shipments require the language of origin, destination, and intermediate stops, as well as international markings for handling instructions.

For example, automatic identification (e.g., bar coding or radio-frequency identification) highlights the communication function and can interface with information systems throughout a logistical system if the symbology is standardized (see Radio Frequency Identification (RFID)). But even manually readable packaging must be clearly legible to interface with logistical management information systems; workers must be able to quickly recognize a package from its label. Almost every logistical activity—entails reading the package and recording or changing its status in an information system—inventory control, shipping and receiving, order picking, sorting, and tracking. Automatic identification technologies such as bar coding and radio-frequency identification enable a systems approach to managing logistical information where every input is standardized and errors are reduced.

The functions of packaging—protection, utility, and communication—are the basis for packaging performance specifications. Performance specifications outline what the package must do (e.g., be able to survive an impact). The specification of performance guides packaging changes that add value and reduce costs.

Many firms and government agencies have adopted packaging performance specifications for logistical packaging. For example, the U.S. Department of Transportation (DOT) has replaced hazardous-material packaging specifications with "Performance Standards" that do not specify material, but do specify tests (e.g., impact, permeability, or compatibility tests) for specific product/package/hazard conditions.

Performance specifications encourage innovation, and innovation results in lower packaging costs. Material specifications are necessary, of course, for routine packaging purchases, but adding a performance specification offers two benefits: (1) a firm that examines its current and expected levels of packaging performance will always uncover opportunities to cut packaging-related costs; and (2) suppliers who are invited to compete on a performance basis will always suggest lower-cost packaging solutions.

TYPICAL LOGISTICAL PACKAGING PROBLEMS

There are three types of logistical packaging problem: engineering problems, cost problems, and logistical problems with packaging solutions. Generally, logistical packaging problems require on-site investigations—the best way to find out more is to go and look.

Packaging professionals use engineering principles of material science to develop new packages and solve protection and productivity problems. The most common material properties that can be scientifically determined are cushioning (for fragile products), impact and vibration resistance of filled packages (26), shelf life and permeability for oxygen- or moisture-sensitive food products (27), and compression strength for hard-to-stack products (28). Packaging professionals also use some industrial engineering principles to configure packing operations and choose packaging machinery.

Management of logistical packaging, however, involves more than "package engineering." Most packaging problem solving is not associated with developing new packages for new products. In fact, most "new" logistical packages are simply variations of packages used for similar products and require very little "engineering."

The second principal activity of a packaging professional is to reduce the cost of purchasing packaging materials and the cost of packing operations. The most common areas for cost reduction are reducing package weight or size, material substitution, size reduction, automation of manual tasks, and standardization. Innovative incremental packaging solutions, which reduce cost and improve performance, abound in the packaging supply industry. Manufacturers of packaging materials and equipment are sources of a great amount of free, if potentially biased, consulting advice, so it is wise to consult more than one. Other good references include trade journals such as *Packaging*, *Materials Handling Engineering*, *Modern Materials Handling*, and *Transportation and Distribution*.

The third type of packaging problem consists of logistical problems and opportunities with packaging solutions. Packaging can reduce the cost of every logistical activity: transport, storage, handling, and inventory control, and it can improve customer service. It can reduce the cost of damage, safety, and packaging disposal. Integrated management of packaging and logistics is required, if a firm is to realize such opportunities (29–32).

When packaging and logistics are integrated, it is reasonable to consider where and when packaging operations fit into a logistical channel. Packaging postponement can dramatically reduce the cost of an entire logistical system.

The logistical concepts of postponement and speculation can be profitably applied to packaging logistics. These question where and when to add value (time, place, and form utility) in distribution channels in order to reduce costs or improve customer service. The principle of speculation says that manufacturing and shipping should occur at the earliest possible time in the marketing flow in order to achieve economies of scale. The opposite principle of time and form postponement reduces risk by requiring that changes in form and identity and inventory location occur at the latest possible point in the marketing flow, since every differentiation that makes a product more suitable for a specified segment of the market makes it less suitable for other segments. The traditional inventory tradeoff is to reduce risk by postponement (just-in-time logistics) or to reduce cost with economies of scale (forward buying) (33).

Traditionally, the packaging point for bulk products has been postponed or speculated, on the basis of product and market conditions. For example, produce is canned in the fall and stored in "bright" cans; labeling is postponed until food-marketing companies buy and brand it throughout the year. Labeling postponement minimizes the risk of inventory misforecasts and economizes on canning production during a busy season. On the other hand, processing and packaging of frozen fruit concentrates, such as orange or grapefruit juice, is an example of speculation, resulting in low costs because weight is eliminated before shipping and homogenous waste at the orchard is processed for animal food.

Postponement and speculation also apply to assembly and packaging of more sophisticated products in a global market with global sources. When products are similar, but differentiated for local markets, assembly and packaging postponement offers opportunities for customizing packaging for the local markets while minimizing long-distance transport costs and the amount of differentiated inventory in the pipeline.

For example, one of the largest cost-savings initiatives in packaging history (tens of millions of dollars per year) is a case of international packaging postponement. To reduce high transport and inventory management costs, a major electronics manufacturer has postponed the packaging for products shipped overseas. The products are shipped in "bulk packs," palletized and stretch-wrapped, with minimal interleaving between layers. Once there, products are packaged to order. Transport costs have been cut in half, since differentiation and cushioning are postponed until they are required (34).

INNOVATIVE LOGISTICAL PACKAGING

This article has approached the field of logistical packaging from a nontraditional perspective. The reason for this approach is to encourage innovative packaging solutions to logistical problems. Most traditional packaging forms date from the early 1900s and are the most costly packaging systems available. Innovation represents a dramatic potential for savings.

Packaging innovation is a process of problem identification, finding and testing potential solutions, deciding which action to take, and following through to implementation. It requires proactive management by a project champion—usually a packaging professional. It also requires a systems and team approach, since packaging affects so many other functional areas such as marketing, operations, plant and product engineering, logistics, accounting, and finance.

Identification of packaging-related problems is the first step. Problems of cost, protection, utility, and communication may be identified by customers, salespeople, logistical managers, or packaging professionals. The search for packaging solutions may be formal or informal, but the innovation process requires a potential solution before it can proceed. Sometimes problems languish for years before someone thinks of a good solution. Ideas for potential solutions can come from suppliers or consultants or from the advice of colleagues. Alternative packages are judged, subjectively or in lab tests, for their protection, utility, and communication performance, as well as systemwide cost implications. Next, the "best" solution packages are tested in the field (test shipments) and for market acceptance. The early rollout is a period of fine-tuning. Problems with the new package are discovered and corrected. Sustained implementation returns to a new level of business as usual—generally with substantial cost savings.

CONCLUSION

This chapter has shown that, beyond its purchase cost, packaging affects the cost of every logistical activity. Package size affects transportation cost; unitization methods affect order picking and handling costs; identification techniques affect inventory control; and customer service depends on damage control and the cost to unpack and discard packaging. Firms that manage packaging from an integrated logistical perspective, rather than from a traditional purchasing perspective, will find many opportunities for improving their profitability.

BIBLIOGRAPHY

1. Council of Supply Chain Management Professionals. *Supply Chain Management and Logistics Management Definitions*, 2007 (cited 2007 August 2); Available from: http://cscmp.org/AboutCSCMP/Definitions/Definitions.asp.
2. D. Twede and S. E. M. Selke, *Cartons, Crates and Corrugated Board—Handbook of Paper and Wood Packaging Technology,* DEStech Publications, Lancaster, Pennsylvania: Inc., 2005.
3. M. Saghir, *Packag. Technol. Sci*. **15**, 37–46 (2002).
4. D. J. Bowersox, D. Closs, and T. P. Stank, eds., *21st Century Logistics: Maing Supply Chain Integration a Reality.* Council of Logistics Management, Oak Brook, IL, 1999.
5. D. J. Bowersox, D. J. Closs, and M. B. Cooper, eds., *Supply Chain Logistics Management*. McGraw-Hill, Boston, MA, 2002.
6. J. T. Mentzer, *Supply Chain Management*, Sage Publications, Thousand Oaks, CA, 2001.
7. D. Blanchard, *Supply Chain Management: Best Practices*. Wiley, Hoboken, NJ, 2007.
8. H. Stadtler and C. Kilger, eds., *Supply Chain Management and Advanced Planning: Concepts, Models, Software and Case Studies*, 3rd edition Springer, Berlin, New York, 2005.
9. M. A. McGinnis and C. J. Hollon, *J. Bus. Logist*. **1**, 45–62 (1978).
10. International Safe Transit Association, *Pre-Shipment Test Methods*. ISTA Annual, Chicago.
11. D. Twede, *J. Busi. Logist*. **13**, 69–94 (1992).
12. J. Agnew and J. Huntley, eds., *Container Stowage: A Practical Approach*. Container Publications Ltd., Dover, NJ, 1972.
13. United States. Maritime Administration., *A Shipper's Guide to Stowage of Cargo in Marine Containers*. U.S. Department of Transportation Documents, U.S. G.P.O., 1982.
14. Association of American Railroads, *Loading Methods for Closed Cars*, AAR, Chicago, various dates.
15. J. L. Cavinato, *Analysis of Loss and Damage in a Procurement Distribution System Using a Shrinkage Approach, in Business Logistics*, Pennsylvania State University, State College, PA, 1975.
16. W. J. Augello, in G. Pezold, ed., *Transportation, Logistics and the Law*, 2nd edition, Transportation Consumer Protection Council, Huntington, NY, 2004.
17. D. Twede, *Packag. Technol. Sci*. **4,** 305–310 (1991).
18. T. J. Lowery, *Quality Control of Products During Distribution*, in *Logistical Packaging Innovation*, Council of Logistics Management, Chicago, 1991.
19. W. Thompson, *Improving Customer Service "Packages": Direct Product Profitability*, in *Logistical Packaging Innovation*, Council of Logistics Management, Chicago, 1991.
20. T. R. Waters, *Applications Manual for the Revised NIOSH Lifting Equation*, U.S. Department of Health and Human Services, Public Health Service, National Technical Information Service, Cincinnati, OH, 1994.

21. A. T. Kearney, *Measuring and Improving Productivity in Physical Distribution*, Council of Logistics Management, Chicago, IL, 1984.
22. M. P. A. R. D. de Brito, "A Framework for Reverse Logistics," in *Reverse Logistics: Quantitative Models for Closed-Loop Supply Chains*, M.F. Rommert Dekker, Karl Inderfurth and Luk N. Van Wassenhove, eds., Springer-Verlag, Berlin, 2003, pp. 3–27.
23. D. Twede and R. Clarke, *J. Market. Channels Distrib. Syst. Strategy Manage.* **12**, 7–26 (2004).
24. L. Kroon and G. Vrijens, *Int. J. Phys. Distrib. Logist. Manage.* **25**, 56–69 (1995).
25. D. Twede, D. Mollenkopf, and C. Guzman-Siller, *A Market Driven Investigation of Pallet Trends in Grocery Chains*, National Wooden Pallet and Container Association, Washington, DC, 2006
26. R. K. Brandenburg and J. J.-L. Lee, *Fundamentals of Packaging Dynamics*, 4th edition, L.A.B., Skaneateles, NY, 1991.
27. G. L. Robertson, *Food Packaging : Principles and Practice*, 2nd edition, Taylor & Francis/CRC Press, Boca Raton, FL, 2006.
28. G. G. Maltenfort, *Corrugated Shipping Containers: An Engineering Approach*, revised edition, Jelmar Publishing Co., Plainview, NY., 1996, p. vi.
29. K. Johansson, A. Lorentzon Karlsson, C. Olsmats, and L. Tiliander, *Packaging Logistics*, Packforsk, Kista, Sweden, 1997.
30. M. Johnsson, "Packaging Logistics—A Value Added Approach," in *Engineering Logistics*, Lund University, Lund, Sweden, 1998.
31. M. Jahre, "Packaging Logistics for Improving the Environment and Economics in the Value Chain," in *Logistical Packaging Review*, Econpap, Århus, Denmark, 2000.
32. C. W. Ebeling, *Integrated Packaging Systems for Transportation and Distribution*, Marcel Dekker, New York, 1990.
33. L. P. Bucklin,. *J. Market. Res.* **2**, 26–32 (1965).
34. D. Twede, R. H. Clarke, and J. A. Tait, *Packag. Technol. Sci.* **13**, 105–115 (2000).

MACHINE DIRECTION ORIENTATION

D. Ryan Breese
Eclipse Film Technologies,
Hamilton, Ohio
Eric Hatfield
Vice President, MDO
Engineering, Cincinnati, Ohio

INTRODUCTION

In the MDO process, a polymer film, tube, or sheet is uniaxially stretched in the machine direction. MDO is also commonly seen as the first of two steps associated with biaxially orienting films, with the second step being the tentering, which stretches the film in the transverse direction.

Machine direction orientation (MDO) of polymer films provides improvements in stiffness, strength, optics, and barrier and has been commercially practiced for decades. MDO is being utilized to produce films for a wide range of applications and marketplaces, including food, medical, and industrial packaging. Due to the strong economic drivers, companies are utilizing MDO films at an ever-increasing rate (1, 2). The improvement in mechanical properties allows for the downgauging of a current film, which is the most common use of MDO films. In addition, MDO films can be used to replace a less desirable substrate, such as one that is more costly, is more difficult to source, is less receptive to ink, has a lower yield (MSI/lb), and/or is less environmentally friendly. Also, through the use of various polymers and film extrusion technologies, MDO can be used to produce a single film that has a desired combination of properties that were otherwise only attainable through a more costly secondary process, such as laminations or coatings.

STEPS OF THE MACHINE DIRECTION ORIENTATION PROCESS

There are four main steps to the MDO process, as shown in Figure 1 (3).

Figure 2 is a photograph of a commercial scale MDO unit and its respective unwinder.

Preheat (PH). The function of the preheat section is to uniformly heat the film to the desired orientation temperature. This must be done without generating wrinkles or damaging the surface of the film.

Drawing (SD, Slow Draw; FD, Fast Draw). After preheating, the film is oriented between the slow and fast draw rolls. In this stage, the fast draw roll is rotating at a specified ratio faster than the slow draw roll. The gap between these rolls can be adjustable to process a wide variety of films. Typically, the film can be oriented to as high of a ratio as 10:1 in a single draw section. Higher ratios are possible, but depend on the equipment's design, polymer selection, and film structure.

Annealing (A). The third section of an MDO consists of the annealing rolls. This section thermally stabilizes the film's properties, such as the percentage of shrink. For example, annealing the film at an elevated temperature allows it to relax, minimizing the

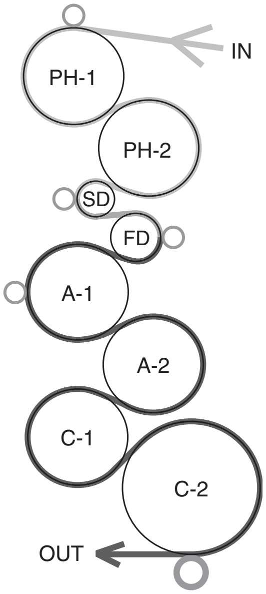

Figure 1. Schematic of an MDO. The equipment consists of preheat (PH), slow and fast draw (SD, FD), and annealing (A) and cooling (C) rolls. Nip rolls are shown on PH-1, SD, FD, A-1, and C-2.

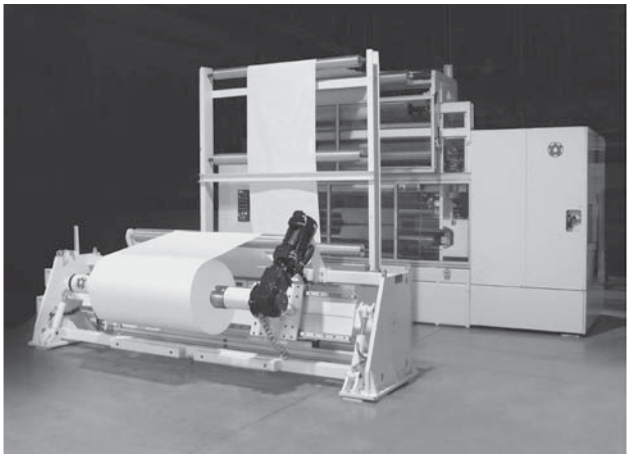

Figure 2. Photograph of a commercial scale MDO unit and its respective unwinder.

percent shrinkage when the film is exposed to elevated temperatures, as is the case with the pouch or bag forming process. Conversely, immediately cooling the film in the annealing section hinders the relaxation of the film. The residual stress in the film causes it to shrink when exposed to elevated temperatures. This characteristic is desirable in several applications, such as shrink wrap bundling and shrink bottle labels.

Cooling (C). The cooling section is the last stage in the MDO, where the film is cooled to near-ambient temperature for winding.

DESIGN OF THE COMPONENTS OF A MDO LINE

The MDO production line consists of the following components (3):

- Unwinder
- MDO unit
- Auxiliary equipment, such as treaters, profile gauges, and trim collection systems
- Rewinder

Unwinder

An unwinder is used if the MDO is not in-line with film extrusion, such as a blown or cast film unit. Often, the unwinder is very simple; however, more elaborate units can be utilized that make the process of changing rolls easier and improve the economics of the process by decreasing roll change over time. The following items must be considered when choosing an unwinder:

- Changing rolls needs to be done safely and efficiently.
- The unwinder should be able to handle rolls of the same dimensions as the rewinder.
- Tension control needs to be incorporated into the unwinder operations to minimize wrinkles as the film enters the MDO.

MDO Unit

While the basic sections of the MDO have already been discussed, some general comments about each section must be made.

Preheat Section of the MDO. In the preheat section, accommodations for the relaxation of the film must be included in the design of the MDO. If the film is heated too fast, wrinkles can form, causing inconsistent operating conditions from uneven heating of the film, resulting in unacceptable film quality and/or breaks. If the film is heated too slowly, the necessary orientation temperature will not be reached, resulting in uneven stretching and possible breaks.

Draw Section of the MDO. Orientation in the drawing section must be conducted in a controlled fashion, with uniform temperatures across the film. In addition, the rate at which the film is drawn is critical for establishing stable operating conditions. Process parameters, such as orientation temperature, draw ratio, incoming line speed, and draw gap distance are all critical for establishing a stable processing window. Often, it is desirable to orient the film to its maximum draw ratio prior to breaking. To do so, the preheating temperatures are typically set as high as possible without melting the film to the roll and the rate of draw optimized to reduce the risk of film breaking. Adverse effects of operating at such conditions include the risk of melting the film to the rolls, which can result in extensive cleaning, and increasing the amount of neck-in. Large neck-in, which is indicative of a slow rate of draw, results in heavier edge beads that must be trimmed. Operating in such fashion increases the amount of scrap and can result in downstream web handling issues, such as wrinkles and poor roll winding uniformity. In most cases, the draw rolls are smaller in diameter, relative to the other rolls in the MDO, to minimize the tangential distance between the release point off the slow draw roll and the inlet point on the fast draw roll. This design is critical for minimizing the amount of neck-in. In addition, with some polymers such as high-density polyethylene, draw resonance or “tiger striping” can be caused by too low of a rate of draw. This results in unacceptable film that has thick and thin strips in the transverse direction. Setting the draw gap too narrow can result in rates of draw that are above those the film can withstand, resulting in undesired web breaks.

Annealing Section of the MDO. The annealing section is one of the most important stages within the MDO for controlling film properties. In this section, the film is stabilized at a specific temperature to provide a film with a desired balance of properties. Inadequate annealing can result in films with higher shrink values at a given temperature, lower gloss, and higher haze values. Such issues can be detrimental to many secondary processes, such as pouch making, where the film will shrink once heated, resulting in an unacceptable seal. Annealing also reduces the amount of shrinkage on the roll after it has been wound. Insufficient annealing can result in excessive tensions within the roll, often causing poor roll profile and edges, blocking, and even crushed cores. Typically, if the film is not designed for a shrink application, it needs to be annealed to minimize the previously mentioned issues. Annealing is generally done near the orientation temperatures. The equipment must be properly designed to allow for adequate time to properly anneal the film prior to the cooling section, and it is typically done with several large-diameter rolls.

Cooling Section of the MDO. The function of the cooling section is to uniformly cool the oriented film to near-ambient temperature. It is important to note that the film is shrinking as it is cooled, so great care must be taken to ensure that wrinkles do not form in this section. This is done by setting the temperature profile and individual roll speeds in the cooling section to allow the film to relax in a controlled fashion. Typically, the cooling section consists of either a few large-diameter rolls or several smaller-diameter rolls closely placed together.

Auxiliary Equipment

Most MDO lines have a method of treating to increase the surface energy of the film. Such treatment is often necessary for secondary process, such as printing and laminations. Corona treatment is the most commonly used technique, but alternatives such as atmospheric plasma treatment can also be utilized.

A profile gauge at the outlet of the MDO is a useful tool for measuring the true draw ratio of the film, as well as determining the appropriate location on the width of the film to take edge trim.

Trim collection systems are also necessary in the MDO process. The simplest technique is to utilize a small trim winder. While these units can be economical and easy to use, they do require periodically changing rolls during production and may not be the most reliable solution. More elaborate blower systems can be utilized to collect the trim at the slitting station and pneumatically transfer it to gaylords, bailers, or compactors. While blowing the trim is a continuous process, it is more expensive to purchase, install, and operate, is not as portable, and may require more maintenance than winders. In addition, blowing trim into gaylords results in inefficient scrap management and higher transportation costs.

Rewinder

Selecting a high-quality, versatile rewinder is critical to the production of high-quality MDO films. With the wide range of physical properties attainable through MDO, a robust rewinder is absolutely necessary. Inherent issues with MDO film, including post-orientation shrinkage, heavy edges, and warmer film temperatures, may make it necessary to wind the film using low tensions as it comes off the MDO line. Doing so will allow it to shrink on the core after it has been oriented and minimize quality issues.

IMPROVEMENT IN FILM PROPERTIES

MDO greatly improves the mechanical properties of polymer films (4–8). Table 1 shows the typical relationships between the changes in film properties as they relate to increasing draw ratio.

The modulus of the polymer film can increase significantly with increasing draw ratio (4–6), and in some cases by 10 times in the machine direction and nearly twice in the transverse direction (4, 5). Similar magnitudes of change were seen in the machine direction break strength (4).

Table 1. Relationship Between Changes in MDO Polymer Films Relative to Increasing Draw Ratio

Property	Change
Modulus	Increases
Tensile strength	Increases
Barrier (water, oxygen, grease)	Increases
Gloss	Increases
Haze	Decreases
Machine direction tear strength	Decreases
Transverse direction tear strength	Increases
Dart drop	Decreases

Barrier properties also improve significantly: The water vapor transmission rates were reduced by nearly 70% for MDO HDPE (6), and oxygen transmission rates were decreased by over 40% in LLDPE/tie/EVOH/tie/LLDPE coextruded films (7). In addition, the MDO film had 70% better oxygen barrier at high relative humidity (90% RH) when compared to the undrawn film (7). For bimodal HMW-PE films, the oxygen and moisture transmission rates go through a maximum, relative to increasing draw ratio, prior to decreasing significantly at higher draw ratios (8). More complicated MDO films rival the oxygen and moisture barrier properties of less desirable coatings and laminations containing PVdC and metalized films (2). These examples demonstrate how MDO can be used not only to provide high barrier but also to tune the barrier properties of polymer films.

Optical properties improve significantly after orientation. For HDPE, the gloss increased by over 70% while the haze decreased by nearly 60% at a draw ratio of 6:1 (6). For LLDPE/tie/EVOH/tie/LLDPE film, the gloss increased by 60% and the haze decreased by over 70% at a draw ratio of 6.5:1 (7).

Typically, machine direction tear and dart drop strengths decrease with increasing draw ratio. Specially formulating film structures can have acceptable tear strengths for a given application, while obtaining several of the previously mentioned benefits from the MDO process (5). Additional work has also shown that through film design, the relationship between dart drop and draw ratio can be reversed, producing films that have increasing dart drop impact strength with increasing draw ratio (1).

ECONOMIC BENEFITS OF USING MDO FILMS

Packaging costs can be significantly reduced, often with an improvement in performance, by utilizing MDO films. Three ways that MDO films can reduce packaging costs are (2):

- Downgauging a current film
- Replacing less desirable films
- Reducing or eliminating additional steps necessary for the production of a flexible packaging

For the first scenario, the improvements in the modulus can allow a converter to downgauge a film used in a

Table 2. Typical Data for a Standard Sealant Film and a Downgauged MDO Sealant Film

Property	Units	Standard Sealant Film	MDO Sealant Film
Gauge	mil	2.0	1.5
Yield	MSI/lb	15.0	19.7
MD modulus	psi	35,000	310,000
MD break strength	psi	4,500	28,000
TD break strength	psi	4,000	2,400
Haze	%	10	9.0
45° Gloss		65	75
Heat seal temperature for 5 lb/in. seal strength	°F	200–250	250

structure, such as a sealant web for a stand-up pouch, without compromising the structural rigidity of the package. Typically, this structure consists of a sealant film laminated to a stiffer reverse-printed film. Pouch makers are limited on downgauging the sealant film by the rigidity requirements necessary for the stand-up feature of the package. Through MDO, the stiffness of the sealant film can be increased, while still maintaining sealing properties, allowing the converter to use a downgauged sealant film without compromising performance. Table 2 shows an example of an MDO sealant film, when compared to a standard sealant film, that, captures a significant yield increase with improvements in mechanical and optical properties.

When comparing the downgauged MDO and generic sealant films, the MDO film provides a 32% increase in yield, a nearly 800% increase in machine direction modulus, an over 500% increase in machine direction break strength, a 40% decrease in transverse direction strength, similar haze, and better gloss. This film forms a seal with strengths of approximately 5 lb at 250°F sealing temperature.

Table 3. Typical Data for Oriented Polyester Film and a MDO Polyolefin Film (2)

Property	Units	0.48 mil PET	MDO Polyolefin Film
Gauge	mil	0.48	0.6
Yield	MSI/lb	42.2	48.6
MD modulus	psi	400,000–600,000	500,500
MD break strength	psi	32,000	60,000
TD break strength	psi	39,000	5,600
MD break strain	%	110	48
TD break strain	%	70	6.7
MD Elmendorf tear	g/mil	30	11.1
TD Elmendorf tear	g/mil	30	54.0
Haze	%	3.6	12

An example for the second scenario would be replacing a polyester film with an MDO polyolefin film. A specific case involves replacing a 0.48-mil PET film with a 0.6-mil polyolefin film (2), as shown in Table 3.

While the gauge of the polyolefin film is 25% heavier, the yield (MSI/lb) is improved by 15%. This is due to the difference in the densities of the two polymers. Additional benefits include a 90% increase in machine direction break strength, an anisotropic tear resulting in better straight-line tear characteristics, the inherent hydrophobic nature of the polyolefin, and a heat-sealable film. Significant shortcomings of the MDO polyolefin film should be acknowledged, and they include the lack of thermal stability at elevated temperatures, higher haze, lower oxygen barrier, and lower transverse direction tensile properties. As a result, some applications can utilize the MDO polyolefin film and capture the yield benefit, while others may be limited by the shortcomings of the MDO polyolefin film.

High-barrier films for sealant webs or lamination replacements are a third application where MDO films can be utilized to significantly reduce packaging costs (2). These films would be utilized to reduce costs in pouch applications where the inherent properties of MDO films, such as increased modulus, barrier, strength and gloss, add value to the finished package and lower package costs by reducing the need for secondary processes. The following example of a sealable high-barrier MDO film combines excellent moisture and oxygen barrier, good heat sealability, high stiffness, high gloss, and low haze (Table 4).

The film's tensile properties are significantly higher than those of laminated polyester structures. In addition, the high-gloss surface is similar to, if not better than, other lamination-grade printed films and provides excellent aesthetics to the package.

This film has oxygen and moisture barrier properties similar to those of many coated and metalized films (9–11), as shown in Figure 3.

Table 4. Properties of a Sealable High-Barrier MDO Film for the Replacement of Laminated Barrier Structures in Flexible Packaging (2)

Property	Units	Sealable High-Barrier MDO Film
Gauge	mils	2.6
MD modulus	psi	230,000
TD modulus	psi	170,000
MD break strength	psi	13,400
TD break strength	psi	3,100
MD break strain	%	57
TD break strain	%	1,440
MD elmendorf tear	g	190
TD elmendorf tear	g	250
OTR	cc/100 in.^{2}/day	0.091
WVTR	g/100 in.^{2}/day	0.314
45° Gloss (print side)		90.1
Transparency	%	93.9
Haze	%	10.5
Heat seal temperature for 10-lb/in. seal strength	°F	250

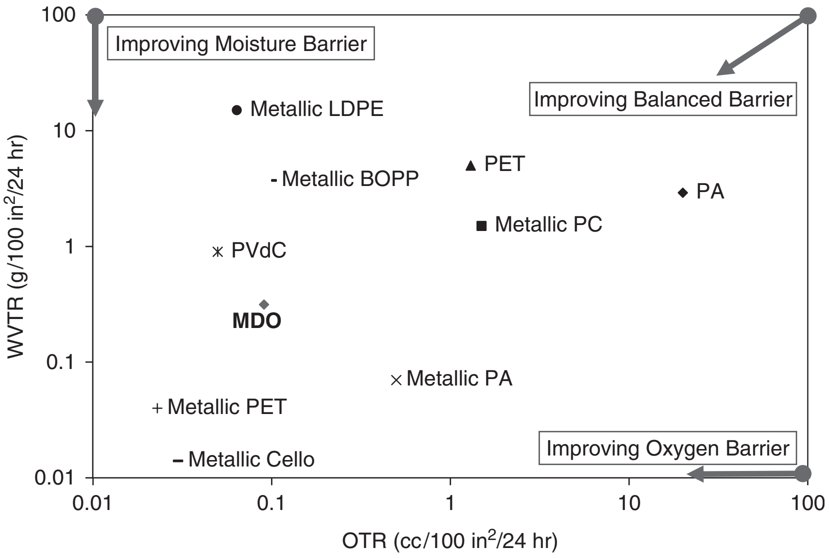

Figure 3. Water and oxygen transmission rates for various polymer films. Data for all films other than the MDO film from references (9–11). Data for the MDO film taken from reference (2).

CONCLUSION

Machine direction orientation (MDO) of polymer films provides significant improvements in both the cost and performance of flexible packaging. Significant increases in stiffness, strength, optics, and barrier are easily attained through MDO. Each section of the MDO unit is critical for the production of high-quality film, with each requiring careful consideration during the equipment design process. Utilizing MDO films can reduce packaging costs through downgauging, replacing less desirable films, and/or reducing the need for more costly secondary processes in the manufacturing of flexible packaging.

GLOSSARY OF TERMS

Blocking Blocking occurs when two layers of film adhere to each other. This is typically seen when a roll is wound with too high of tension and cannot be easily unwound. Winding with lower tensions and/or the addition of an anti-blocking agent to the polymer film can minimize the effects of blocking.

Crushed Core Crushing a core refers to the event where the paper cores that are used to wind the rolls are crushed by the film that is being wound around them. This can occur if the film is wound with too high of tension and/or the film shrinks after it has been wound on the core. Crushed cores make it difficult to unwind rolls in secondary processes.

Dart Drop The impact strength of the film, as measured by a moving weighted dart.

Draw Gap The draw gap is the distance between the slow draw and fast draw rolls. The draw gap can be given either in terms of a radial or tangential distance between the two rolls.

Draw Ratio (DR) The ratio at which the film is being oriented. Draw ratio is also the ratio of the film thickness before and after the orientation process.

Draw Resonance Draw resonance, also known as tiger striping, is the presence of thick and thin streaks in the transverse direction of the film. It is a property inherent to the type of polymer being oriented.

Edge Bead An edge bead is the thick portion of film located at the edges of the roll. Typically, the edge bead is removed by cutting a small piece of film off the edge, known as trim, prior to winding.

Gloss The amount of light reflected from the surface of the film at a specified angle. Gloss is the shininess of the film.

Haze The percentage of light that is not transmitted through the film. Haze is the lack of film transparency.

MDO Machine direction orientation.

Neck-in The amount the width of the film changes after orientation. The neck-in is calculated by subtracting the width of the film after orientation from the width of the film prior to orientation.

Nip Rolls The nip rolls are typically rubber covered rolls that are used to pin the film to the surface of the heated/cooled roll. Nip rolls are critical for proper tension control throughout the process.

Orientation Temperature The orientation temperature refers to the temperature to which the film has been heated by the preheating rolls prior to the orientation stage.

Profile The profile refers to the thickness of the film in the transverse direction.

Rate of Draw The rate of draw is the rate at which the film is being oriented. It is also referred to as the acceleration in the gap. The rate of draw is calculated by dividing the difference between the fast draw and slow draw speeds by the tangential distanced of the drawing gap.

$$\text{Rate of draw} = \frac{(\text{Fast draw speed} - \text{Slow draw speed})}{\text{Tangential gap distance}}$$

Roll Profile Roll profile refers to the uniformity of the roll in the transverse direction of the film.

Trim A small piece of film cut from the edge prior to the winding of the roll to remove the edge bead.

Yield Yield refers to the surface area, typically given in thousand square inches (MSI) of one pound of film (lb).

BIBLIOGRAPHY

1. K. L. Williams, G. Laverde, R. Wolf, and D. R. Breese, Economic benefits of machine direction orientation, SPE Polyolefins RETEC Conference, 2005.
2. D. R. Breese, Economic benefits of utilizing MDO films in flexible packaging, TAPPI PLACE, 2007.
3. E. Hatfield, Some of the important design requirements of a machine direction orientor (MDO) Machine, TAPPI PLACE, 2007.
4. D. R. Breese, G. Beaucage, and K. L. Williams, Modeling the effects of solid state orientation of blown high molecular weight high density polyethylene films: A composite theory approach, SPE ANTEC, 2005.
5. D. R. Breese and J. J. Strebel, Balancing tear strength and modulus of machine direction oriented films containing high molecular weight polyethylene, SPE FlexPackCon, 2006.
6. E. Hatfield, R. Tate, K. L. Williams, and B. Todd, New MDO Medium molecular weight high density polyethylene films, SPE ANTEC, 2001.
7. E. Hatfield and D. R. Breese, Step change improvements in barrier using MDO, TAPPI 2006 Innovations in Barrier Packaging, 2006.
8. D. R. Breese, and G. Beaucage, Effects of machine direction orientation on the moisture and oxygen barrier properties of HMW-PE films, TAPPI PLACE Conference (2005).
9. S. E. M. Selke, J. D. Cutler, and R. J. Hernandez, *Plastics Packaging: Properties, Processing, Applications, and Regulations*, 2nd edition, Hanser, Munich, 2004.
10. A. L. Brody, and K. L. Marsh, *The Wiley Encyclopedia of Packaging Technology*, 2nd edition, John Wiley & Sons, New York, 1997.
11. O. Vetter, Trends and opportunities in the European clear barrier market, TAPPI PLACE, 2006.

MANAGING THE PACKAGING FUNCTION

Al Corning
A Corning Consulting, Inc.,
Lombard, Illinois

Ongoing disagreements and/or confusion exists as to where in the organization packaging best "fits" and, even worse, a general lack of understanding on the part of senior management, and other corporate groups, as to what packaging can or should be doing to best serve that business.

LOCATION IN THE ORGANIZATION

Where is the packaging function best positioned to serve the company? Granted, there is no easy answer to this question. The close relationship with suppliers that are typically desired or required directs one to elect location within the purchasing department as optimum. Especially when one considers the increasing importance of cost control, cost reductions, specification negotiation, and supplier problem resolution—especially quality problems.

Cases exist in which the manufacturing function has a dominant need; and in all cases, packaging must assure good working relationships with production management *and* line personnel.

In essence, there is no one best answer for all, *but* the wrong or inappropriate corporate location of the packaging function ensures hampered performance and limited professional growth or recognition of value.

PACKAGING RESPONSIBILITIES: KNOWN AND UNDERSTOOD

Perhaps the prime responsibility of a packaging manager is to understand clearly all that is *currently* and appropriately expected of the function, and, likewise, to educate upper management, continually, as well as their peers or "customers" in other company functions' as to what the department's capabilities and expected productivity are. The latter is basis staffing, training thereof, budget, and assigned priorities.

The emphasis on *current* expectations is to ensure that the department manager keeps aware of ongoing changes in the company and/or industry that continually impact respective responsibilities and priorities. Those changes must also be quickly communicated to the packaging staff.

STAFFING

One must expect the typical, and likely ongoing, understaffing that exists today has existed for years, and it will likely continue in the future. This understaffing is due partially to failure to communicate to senior management the needs, benefits, and cost-effectiveness possible within the packaging function. "Cost-effectiveness" is a combination of cost reductions and avoiding major costly claims or mistakes that impact other corporate functions. This is concept covered in a later paragraph.

Appropriate staffing is usually a matter of budget restraints and the collective expectations of the packaging department. Clearly delineated project assignments and regular progress reports help emphasize possible understaffing. If certain engineers have more work assigned than they can reasonably handle, then the resultant tardy results and stress will quickly magnify the need for added staffing. One cannot emphasize enough the need for establishing a project priority system as the best measure of "appropriate" staffing. In essence, continuing failure to meet objectives and particularly timelines (schedules) will be a failure of *management*. That could include department managers and their superiors! If added staff is not made available, then a reduction in priority assignments is in order if timelines are to be met.

TRAINING

Because packaging as a whole is both complex and ever changing, ongoing training programs are of paramount importance, which include both technical and nontechnical. Good examples of the latter include total quality, teamwork, the development of leadership thereof, as well as interpersonal relations and communications.

A need always exists for prompt and optimum decisionmaking. Therefore, *everyone* in the department should attend a course in problem analysis and decisionmaking. They last throughout a career!

Finally, department managers are responsible for training their successors; the earlier, the better.

BUDGET

The woes of an inappropriate budget are a great teacher for future budgeting. Properly budgeted departmental costs, as well as cost reductions, are a key to avoiding monthly or quarterly stress through the year. Department managers must take the time to fully understand what is expected of them in the year ahead, both of themselves and all others. This understanding helps establish a budget, which at least *allows* for a good to excellent performance. A constant review is essential through the year as "surprises" come or situations change. The resultant changes in priorities or workload can be deafening (which refers to the screams from those individuals who expect a certain level of performance from the packaging functions).

EDUCATING ASSOCIATES AND SENIOR MANAGEMENT

It can be enlightening to find out how little your peers and/or senior management understand about packaging! The better packaging is understood, the more likely you can expect proper recognition and understanding of *your* problems in day-to-day affairs.

It is clearly worthwhile to prepare a brief, but thorough, description of what you do and for whom. Also, consider the benefits of a meeting in which you can explain in some detail, and others can ask questions to learn, the complexities and potential of the packaging functions *in your company.*

COST REDUCTIONS AND CRISIS AVOIDANCE ($ AND $)

These concepts are two critical aspects of a packaging department, which impact staffing, growth, and respect. Every packaging person in the department should have some cost reduction budget dollars assigned annually, with a total cost reduction budget of 1–3% annually on the basis of the total package material expenditures for that year. Cost reductions affect the corporate "bottom line" and should get attention at the highest levels, especially if a year-end summary is sent out with wide circulation!

Equally important is the avoidance of major packaging crises, especially claims due to unsalable merchandise. These claims can, and have, mushroomed into millions of dollars. Then packaging is in the spotlight negatively! Good packaging specifications and the enforcement thereof, along with participation in vendor screening or selection, are the responsibility of packaging. Many horror stories exist about packaging and product claims that serve to remind us how important the proper package and package quality are to the marketplace.

PROFESSIONAL GROWTH AND ASSOCIATIONS

Packaging managers should assume responsibility for their own and the department's growth professionally speaking. In addition to the training programs previously mentioned, opportunities are present to participate in the local chapter of the Institute of Packaging Professionals (IoPP). Furthermore, it allows you to become a Certified Packaging Professional (CPP) through the IoPP exam. The CPP program has been modified to allow more alternatives to qualify for the CPP certification. This certification is truly a matter of personal pride and industry recognition of your interest in being a professional member.

PROJECT CONTROL

The packaging manager should assume full responsibility for projects assigned to the department and their successful completion on a timely basis. The number of projects accepted and their comparative or assigned priority should be a direct responsibility of the department manager and should be clearly understood in total by the manager and the assigned engineer.

This control is a critical basis for good interrelationships between packaging and other departments, especially new-product development, marketing, and manufacturing. Such activity often calls on the manager's diplomatic skills in explaining current workloads and any new assignments' comparative priority.

SELF-DIRECTED PROJECTS

One major means of helping the staff engineer gain and retain pride in their work is to encourage their self-initiated projects. This encouragement could, if not should, involve up to 10% of their time. It certainly develops a sense of personal pride and professional growth.

This might be a good time to emphasize the benefit of motivation in the individual engineer. A lack of motivation to excel and/or improve is a sure sign that something is awry and needs attention from the department manager. Such lack of motivation can, and usually does, result in less than quality efforts, all the way to sloppy or careless work. The longer it continues unabated, the worse the results become.

GLOBAL OUTLOOK

Today's packaging manager must have a global interest and awareness. Matters such as new products, materials or equipment, and cost impact because of impending worldwide shortages or market glut allow for constructive planning and activity. Whether this knowledge is primarily from trade magazines, meetings or seminars, supplier presentation, or whatever, the point is that there must be sources of global packaging knowledge for packaging department managers. They, in turn, can sort out the likely impact on their company products or industry and keep the management appropriately informed.

PACKAGING SPECIFICATIONS

A first step in developing a worthwhile specification program might be "descriptive" specifications. By definition, these specifications describe the package structure and size. They lack any assurance of quality, or better-controlled quality, from the vendor. This benefit comes only from "performance" specifications that are complete and negotiated with the vendor to ensure that they are realistic. They should be signed off by the supplier and your purchasing department as recognized operating documents. Many historical examples exist in all industries of how performance packaging specifications prevented claims and/or market disasters. Today, with the constant emphasis on quality, it is the bestway to ensure that the package is what was planned, tested, and expected from the package development effort.

CONCLUSION

In summary, the packaging manager has the opportunity to hire motivated engineers and technicians, implement an ongoing training program for their growth on the job, and help ensure optimum department location in the corporate structure that improves effectiveness as well as the company profits. The latter is the result of well-executed cost reductions and claim avoidance, along with carefully prepared performance packaging specifications. Truly, it is a professional effort conducted by a Certified Packaging Professional (CPP).

MARINE ENVIRONMENT AND EXPORT PACKAGING

John P. Colletti
John P. Colletti and Associates,
Pittsburgh, Pennsylvania

PURPOSE AND SCOPE

Before any meaningful discussion can occur about the preparation of goods for export shipment, there must first be an understanding of the terms "preservation", "packaging", and "packing". These three terms constitute a total system that, when properly implemented, serves the following purposes:

- To protect cargo from the elements and the normal rigors encountered in export transportation
- To facilitate handling
- To provide a degree of rigidity to the cargo
- To provide continued protection to the cargo in short- and long-term storage

This article is intended to offer the shipper a ready reference on how to prepare a product for export shipment. The fundamentals of preservation, packaging, and packing, including the selection of materials, are discussed. Proven methods of construction of skids, crates, and boxes are presented. The problems associated with marine transportation and with the use of sea containers are given special attention.

DEFINITIONS

Preservation is the operation by which goods are protected from the elements, i.e., freshwater and salt water, heat, cold, corrosive atmospheres, and humidity. Preservation usually consists of the direct application of a coating specifically designed to protect against a known hazard such as rust. Other types of preservatives are vapor-corrosion inhibitors (VCI) and vapor-phase inhibitors (VPI), which are additives in the form of powder or chemically treated paper that serve to inhibit the formation of water vapor and the rust resulting therefrom. Desiccants are also used as preservatives because they absorb moisture.

Packaging is an operation that consists of wrapping or boxing an item as a preparatory step prior to placing the item into the final shipping container. The nature of an export shipment, i.e., by marine transportation, is such that the cargo is handled many more times than a domestic shipment, and for that reason, greater consideration must be given to known or assumed levels of shock and vibration. The type and extent of packaging depends on these considerations as well as on marketing requirements and segregation requirements. It is usually performed as an intermediate step in the protection of the item from the rigors of transportation.

Packing is the final step in the preparation of goods for shipment. Packing consists of the outer or external shipping container, whether it is a box, crate, or sea container. Cushioning, blocking, bracing, and anchoring are additional protective measures taken within this outer shipping container.

If shippers would view the preparation of their goods for shipment as a system consisting of preservation, packaging, and packing and would conscientiously evaluate their goods for susceptibility to the rigors encountered in marine transportation, their goods would stand a substantially better chance of arriving at the ultimate destination in sound condition.

VCIs and VPIs, when incorporated in waterproof packaging, can add a substantial measure of protection against moisture.

Desiccants are usually moisture-absorbing powders contained in packages such as boxes or cloth bags. When placed in relatively watertight or waterproof voids, these desiccants will absorb excess moisture. They cannot, however, be expected to continue to absorb water or moisture beyond their absorption capability; therefore, the amount of desiccant used must be carefully determined considering the expected temperature and humidity levels and the volume of the spaces that they are to protect.

Marks and numbers are extremely important. The outer or external shipping container must clearly show certain critical information essential to the safe handling and expeditious delivery of cargoes to their final destination: The name and full address of the consignee; an identifying number or code relating to the particular item being shipped; full dimensions and gross and net weight in both metric and British systems; and the appropriate international shipping symbols such as "Keep dry," "Fragile," "This side up," and "Lift here" or "Sling here," are all part of the labeling requirements (see also Figure 1).

Unitization is the assembly of cargoes of similar size and configuration into a single bundle, group, platform, or pallet. The purpose of unitization is to reduce cubage, to facilitate handling, and usually to provide a greater degree of rigidity to the unitized cargoes. The bundling of pipe, coiled wire, lumber, and structural steel members are examples of unitization.

Palletization is a special case of unitization and consists of placing one or more similar units of cargo on wooden pallets and securing the cargoes to the pallets usually by means of steel or synthetic fabric tension bands. If required, overwraps may be applied to the palletized units to provide either watershed or waterproof protection. Other common methods of restraining and securing palletized cargoes are shrink wrap and tension wrap (polyethylene or polypropylene films).

The term *protective materials* generally refers to contact preservatives such as paint, grease, and oil or to the watershed or waterproof liners and wraps applied to protect the cargo from the elements. Protective materials can also include cushioning materials and blocking and bracing.

Skids are wooden timbers or alternative materials used either as a base to facilitate handling for heavy cargoes where cargoes possess inherent rigidity; or skids serve alone as a base for cargoes that lack inherent rigidity, protecting them and facilitating handling. Skids are also major structural members in crate construction. It is important to note that if skids are used alone as a base to carry a cargo with or without inherent rigidity, then attention must be given to the type of load (i.e., uniform or concentrated), and the skid must be designed accordingly. In addition, for economic reasons, skids used as structural members in true crates can be significantly smaller in cross section than the skids used as support bases because crate side and top and end panels contribute significantly to the overall strength of the crate.

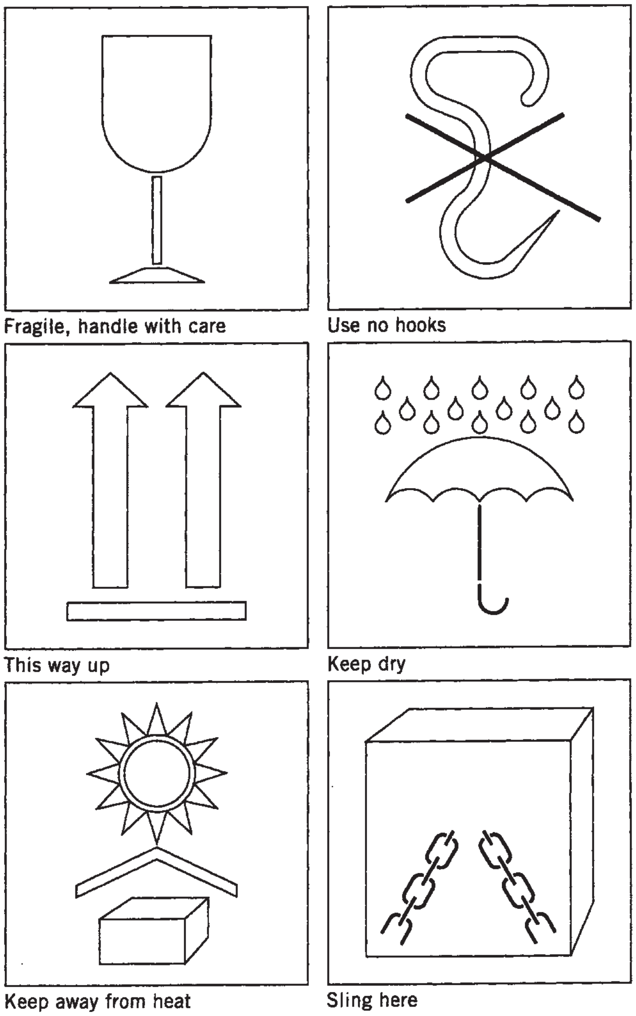
Fragile, handle with care
Use no hooks
This way up
Keep dry
Keep away from heat
Sling here

Figure 1. International shipping symbols.

A *wood crate* (see Figures 2–7 for examples of open-crate design) is a structural framework of members fastened together to form a rigid enclosure that will protect the contents during shipping and storage. This enclosure is usually of rectangular outline and may or may not be sheathed. A crate differs from a nailed wooden box in that the framework of members in the sides and ends provides the basic strength, whereas a box must rely for its strength solely on the boards of the sides, ends, top, and bottom. The crate framework can be considered to be similar to a type of truss used in bridge construction. It is designed to absorb most of the stresses imposed by handling and stacking.

A *wooden box* is simply a rectangular enclosure that consists of wooden boards or planks nailed along their ends or sides to adjacent boards or planks. Boxes generally do not employ framework such as that used in crates. However, boxes can and should employ *cleats* and *battens*, which are wooden members that act as nailers and stiffeners.

The *wood species* most commonly used in crate construction are divided into four groups largely on the basis of density. In general, it is good practice to use species in the

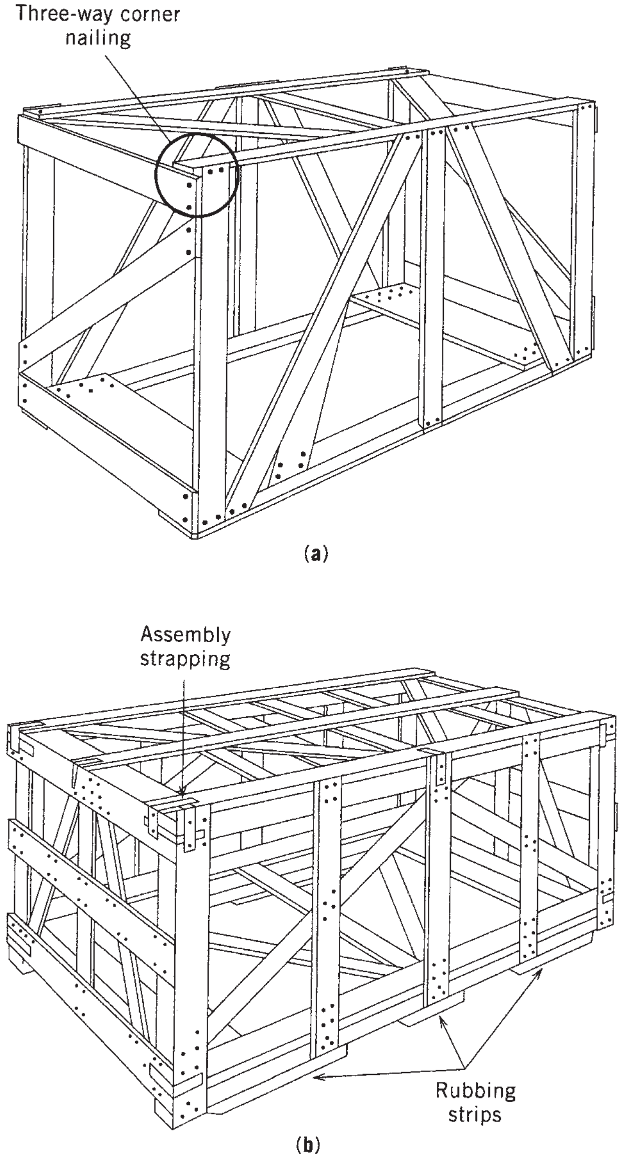

Figure 2. Open-crate designs: (**a**) light-duty open crate (for loads to ≤200 lb) with three-way corner nailing, the key to proper assembly nailing of crates of this type; (**b**) limited military-type open crate (for loads ≤2500 lb) designed for the shipment of light, bulky items that do not require a waterproof container (2).

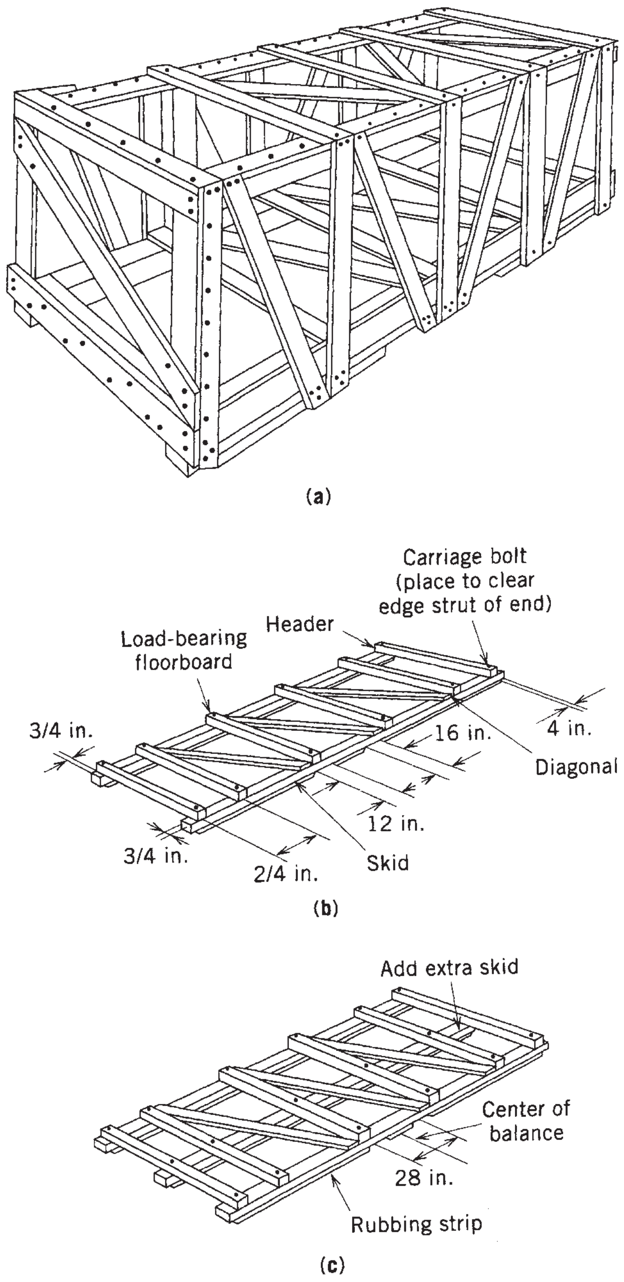

Figure 3. (**a**) Typical open crate; (**b,c**) bases for light-duty open crates [(**b**) ≤42 in. wide; (**c**) >42 in. wide] (2).

same group for similar parts. Group I consists of the softer woods such as pine, spruce, and chestnut. Group II consists of heavier woods such as Douglas fir and Southern yellow pine. Group III woods are generally hard woods of medium density and possess relatively good nail-holding capacity. Examples of these woods are ash, soft elm, and soft maple. Group IV woods are heavy hardwood species, the heaviest and hardest domestic woods. They have the greatest capacity to both resist shock and hold nails. They are difficult to nail and tend to split but are especially useful where high nail-holding capacity is required. Oaks, hickory, birch, and white ash are examples of Group IV wood.

Wood defects should be carefully considered when selecting wood for skid, crate, and box construction. Seasoned wood is preferable to green lumber. Knots and other various defects, such as slope of grain, decay, wane, shakes, checks, splits, and warping, are defects that affect the strength and long-term serviceability of wood. Guidelines for selecting wood with defects are contained in great detail in the USDA *Wood Handbook* (1) and *Wood Crate Design Manual*, Agricultural Handbook No. 252 (2).

Rub strips or runners are lumber strips secured to the underside of skids and skid-based crates to facilitate handling. Rub strips are an essential part of skid assemblies and crates and in box construction for loads in excess of 200 lb.

Tension bands are metal or fabric bands or straps used to secure or bind cargoes to pallets or skid bases or as an

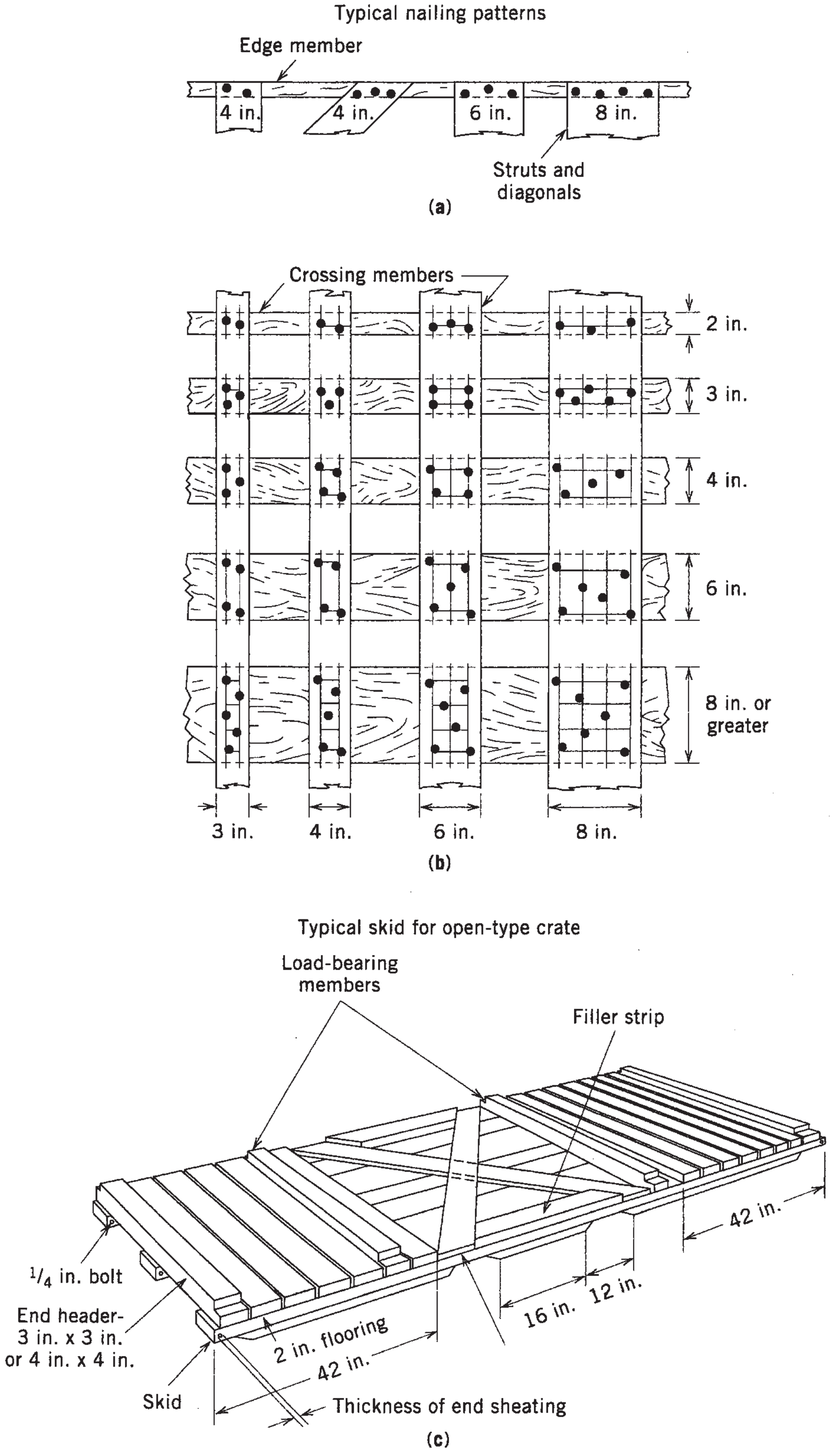

Figure 4. (**a,b**) Typical nailing patterns; (**c**) typical skid for open-type crate (2).

added measure of binding the external members of crates and boxes. Tension bands are manufactured in a variety of dimensions and are applied by means of mechanical or hydraulic tensioning equipment. Tension bands are also an essential part of good packing.

Reinforcing straps (see Figure 8) are mild steel metal bands fitted with nail holes and can be affixed at the corners of crates and at the junction of side-panel vertical members and top-panel horizontal members. Reinforcing straps should be applied in two directions where possible.

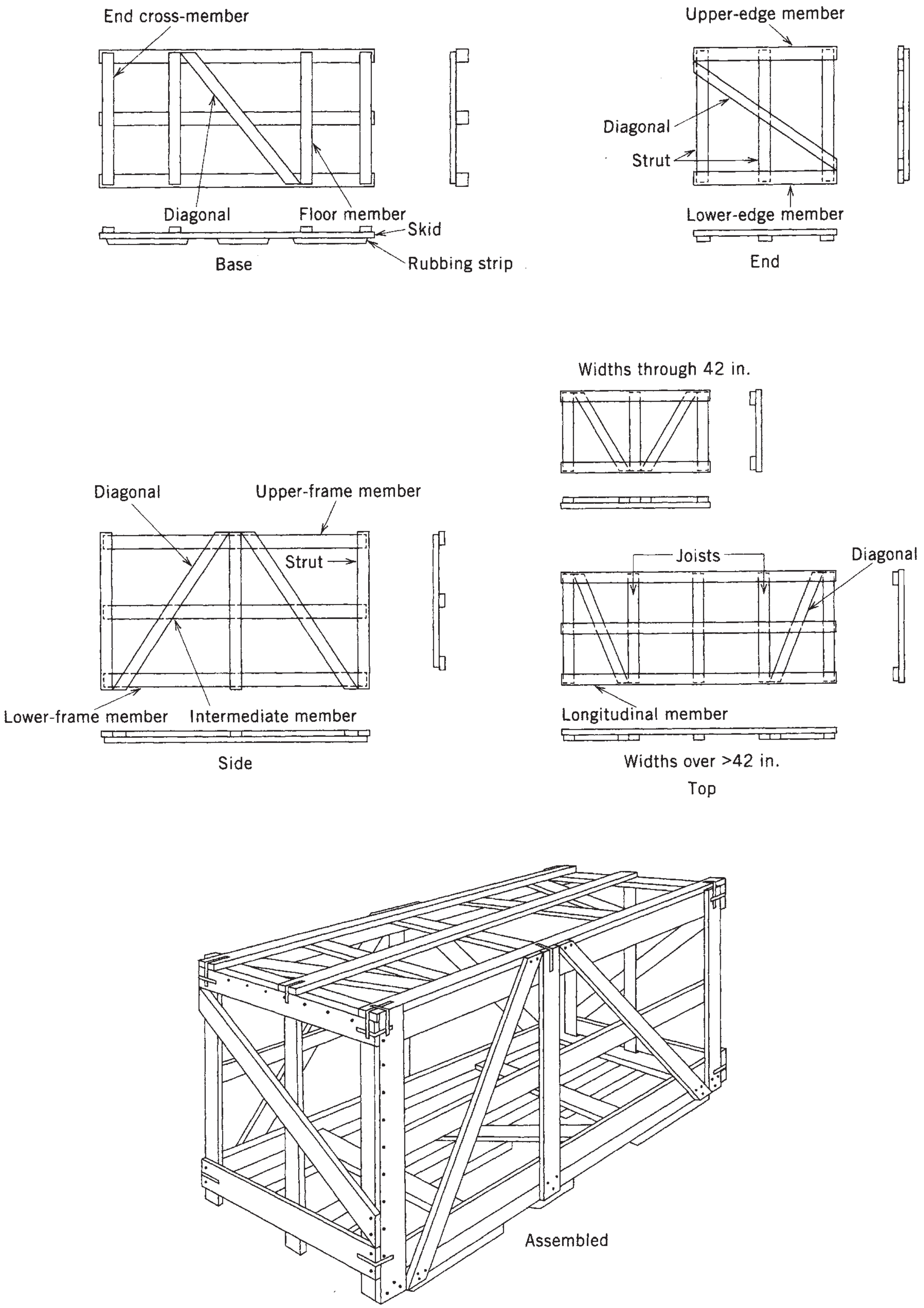

Figure 5. Crate components and final assembly (2).

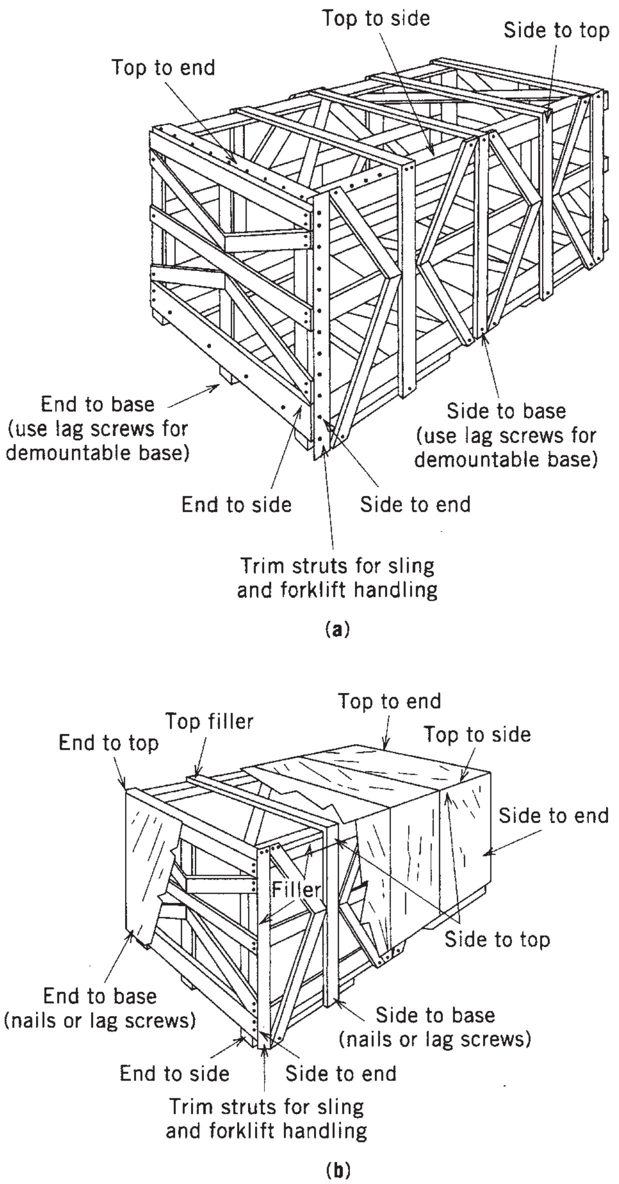

Figure 6. Assembly of (**a**) light-duty open crate; (**b**) covered-style light-duty open crate (2).

These straps serve as an added measure to prevent the separation of joints.

Headers are timbers or alternative materials that are bolted across the end of skid assemblies. Generally, they are to be of at least the same cross section as the skid members they join. Headers are an essential part of skid assemblies in skids acting alone as well as skids serving as part of a crate.

Load-bearing floorboards are wooden members or alternative materials that are fastened transversely across the tops of skid assemblies and carry the load of the item for which the skid assembly is intended.

Splicing refers to the joining, end to end, of two lengths of timbers of similar cross section to make one longer section with approximately the same longitudinal strength as a single continuous piece. The ends to be spliced are to be notched to half the timber thickness, and through-bolts are to be placed vertically through the joining notched sections. Lapped along each side of the splice is to be a $\frac{1}{4}$-in. steel plate of length no less than three times the thickness of the members joined and through-bolted, side to side, with at least two bolts in each half of the splice.

A *uniform load* refers to a load that is distributed more or less evenly over the entire unsupported length of the member on which it rests. As was pointed out above, consideration must be given to the type of load, i.e., uniform or concentrated, when determining the size of members to be used as skids and load-bearing floorboards.

A *concentrated load* is a load that is not distributed evenly over the unsupported length of the member on which it rests. Rather, it is centered over a shorter segment of the member on which its rests, which results in a bending moment higher than that produced by a uniform load of similar magnitude.

Rigidity refers to a strength property of materials that allows them to resist deformation such as longitudinal bending or racking. For example, a 20-in.-diameter pipe with $\frac{1}{2}$ -in. wall thickness and length of 20 ft may be able to be picked up by a sling at its midlength without any noticeable deformation, whereas a 2-in.-diameter pipe with wall thickness of $\frac{3}{16}$in. and length of 20 ft would droop noticeably if lifted with a sling at its midlength. Items with no inherent rigidity, which are intended for export shipment, should be skidded or crated to facilitate handling and prevent damage.

Fragility is a term used to describe the degree of susceptibility to damage from the normal rigors of transportation, i.e., shock and vibration.

The Bending moment, as used within the scope of this article, refers to the product of a load acting over a distance to produce deformation of a structural member that is subjected to the load at some point along its length. The load may be uniform or concentrated as described above. As an example, consider a beam supported only at its extreme ends and subjected to a load at its midlength such that the resultant of the load acting downward and the reaction forces at the extreme ends acting upward is a sagging of the beam. What actually happens here is that the fibers of the beam in contact with the load are in compression, whereas the fibers on the underside of the beam opposite the load are in tension. The bending moments described above can be written in the form of the mathematical expression

$$\mathrm{BM} = \frac{WL}{4}\,(\mathrm{ft} \cdot \mathrm{lb})$$

where BM is the bending moment, W is the applied load, L is the unsupported length of the beam, and the denominator 4 takes into account that W is a concentrated load. Similarly, the mathematical expression for the bending moment resulting from the application of a uniformly distributed load on the same beam

$$\mathrm{BM} = \frac{WL}{4}\,(\mathrm{ft} \cdot \mathrm{lb})$$

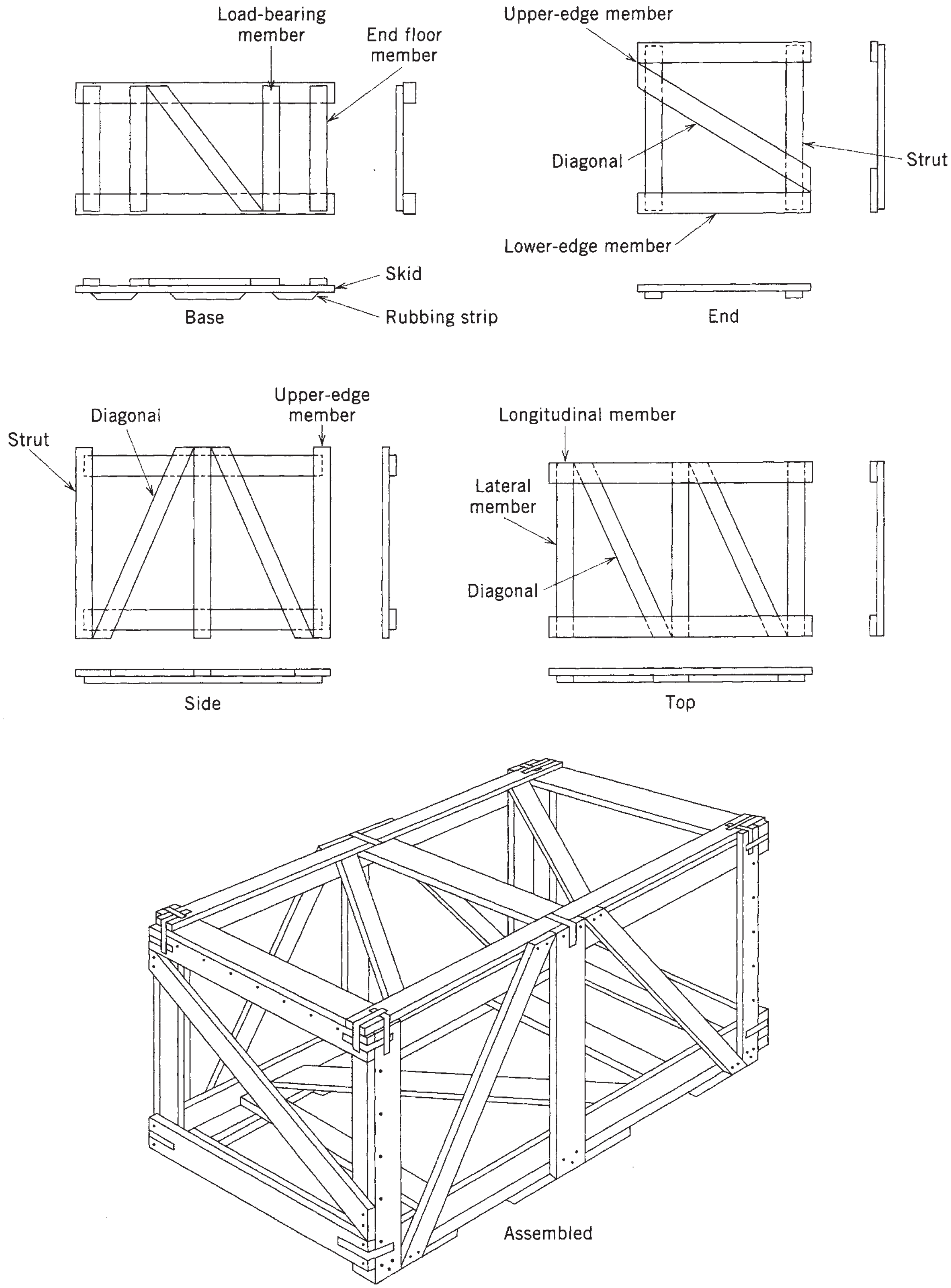

Figure 7. Style A, limited military-type open crate (2).

where the denominator 8 accounts for the fact that W is a uniform load. In some calculations for determining bending moments on beams where the applied loads are neither strictly uniform nor strictly concentrated, it is convenient to use the denominator 6.

Stress is directly related to the bending moment. Mathematically,

$$\text{Stress} = \frac{\text{BM}}{\text{SM}}\,[(\text{in.} \cdot \text{lb})/\text{in.}^3] = \text{lb/in.}^2$$

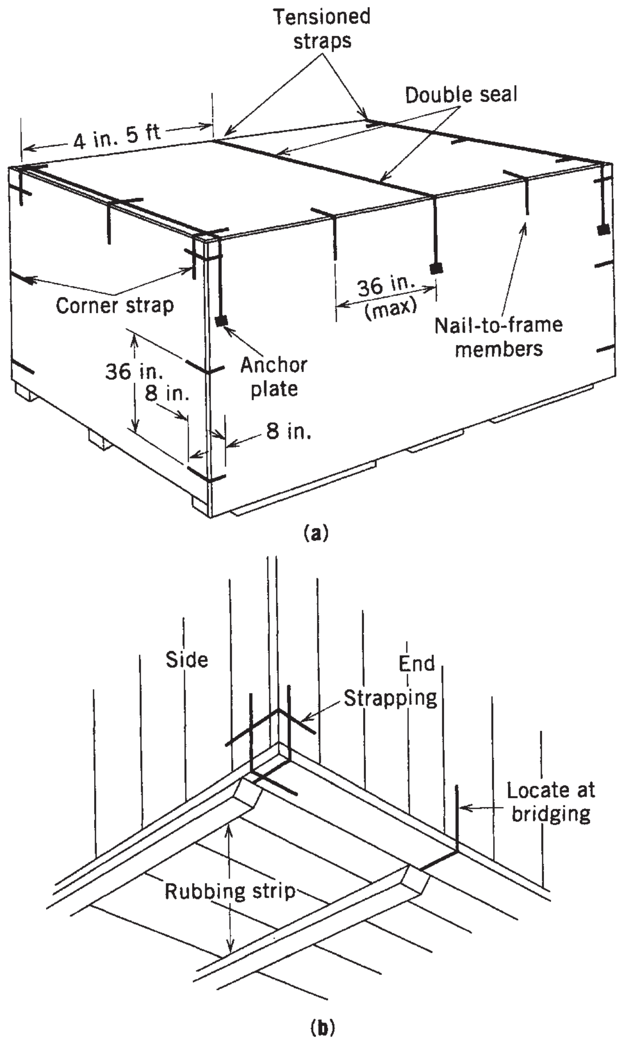

Figure 8. Strapping for crates: (**a**) sheathed crate with skid base; (**b**) additional strap for sill-type base (2).

where SM (section modulus) denotes a property of a particular beam cross section. It is defined as the moment of inertia I (in.^{4}) divided by the distance of the most remote fiber from the neutral axis, and it is denoted by the symbol Z or SM. A simple mathematical expression for section modulus is $(bd^2)/6$, where b is the width (inches) and d is the depth (inches) of the cross section. It is clearly observed that section modulus is extremely helpful in determining the actual stress to which a beam is subjected under a known bending moment.

In this section, the term "engineered" means that an analysis must be made of the types of loads and their magnitudes on the various structural members of crates so that their required dimensions may be correctly determined by calculation.

MARKS AND NUMBERS

The purpose of marks and numbers is to identify the shipper, consignee, and purchase order; aid in safe handling; provide general information; and identify hazardous materials. Never identify the contents unless it happens to be hazardous materials.

Marks and numbers should be made in large (2-in. minimum height) block letters and numbers. All numbers such as gross and net weight and dimensions should be in both British and metric units. Marks and numbers should be placed on three sides of boxes and crates to ensure that they can be seen, and these should be accompanied by the international symbols such as the umbrella denoting "Keep dry," the wind glass denoting "Fragile," and the link chain denoting "Sling here." Marks and numbers should be in permanent ink or paint that contrasts with the background.

PRESERVATION

Some items, by their method of manufacture, are already preserved. Others require protective coatings such as oils, grease, paint, or some other contact preservative that may be specified by manufacturing, engineering, quality control, or customer requirements. Some items, in addition to contact preservatives, require a wax-paper wrapping or some other protective film around the item.

Certain items may require, besides contact preservatives, additional protection from the elements, especially water, such as shrouds, liners and linings, wraps, VPI or VCI (moisture inhibitors), or desiccant materials. Wraps applied over a contact preservative must be greaseproof and require a means of assuring that they remain in place during handling and transportation. Liners and linings are waterproof-barrier materials applied between framing and sheathing to provide watershed and diversion protection for the items crated. When shrouds are applied, all projections in sharp corners must be cushioned to prevent penetration or abrasion of the shroud from either internal or external sources. The bottom edges of all shrouds should be fastened down with batten boards and additional restraints provided to prevent ballooning or flapping of the shrouds in transit. Adequate bottom ventilation must be provided either by spacing floorboards ($\frac{3}{8}$-in. minimum) or by drilling one 1-in.-diameter hole for each 5 ft^3 of shrouded volume. When VPI/VCI materials are used, a sufficient quantity of treated paper must be used to completely enclose the item.

For general watershed and diversion protection, polyethylene films (4 mils minimum thickness), asphalt-laminated kraft paper, or filament-reinforced polyethylene- or polyethylene-coated kraft paper may be used. When applying water-vapor-resistant liners or lining, such as asphalt-laminated kraft paper or polyethylene films (6 mils minimum thickness), it is essential that they be sealed tight. Whenever VPI/VCI-treated papers are used, they must be inserted within a tight enclosure, and the linear or lining must be sealed with water-proof tape. This is also true of desiccants.

Skids, Crates, and Boxes. The materials used for skids must be Group IV (hard) woods such as beech, birch, hard maple, hickory, oak, rock elm, and white ash. These woods have the greatest nail-holding power and the highest overall strength and resistance to shock. However, they are very susceptible to splitting. These woods should be used for skids, headers, load-bearing floorboards, and critical joists.

Group II and III are generally acceptable for exterior box and crate construction. Group II woods include Douglas fir, hemlock, Southern yellow pine, Tamarack, and Western larch. These woods are harder soft woods. They possess greater nail-holding power, greater strength, and greater shock-resisting capacity than do Group I woods. They are more inclined to split, and their grains often deflect nails. Examples of Group III woods are ash (except white), cherry, soft elm, soft maple, sweet gum, sycamore, and tupello. These woods are similar to Group II in nail-holding power and beam strength but have less tendency to split and shatter under impact.

When using plywood as sheathing or floorboard material, type C–D interior plywood with exterior glue is the best economical selection.

Lumber Selection and Defects. A great deal of consideration must be given to a standard of quality of the wood selected for skids, crates, and boxes. Often, the cheapest grade of lumber will contain a large number of defects that are undesirable. Therefore, it may be necessary to select a higher grade of lumber to eliminate most disqualifying defects. Generally, knots are not to exceed one fourth of the width of the member. No knot, regardless of size, will be permitted on the edge of any member. Obviously, this is because the member may be subjected to bending and a knot may fall in an area subjected to compression or tension. The cross grain or slope of grain, disregarding slight local deviations, along the general direction of the grain as related to the longitudinal axis of the wood member, should not be steeper than 1 in. in 15 in. of length. Wane is either bark or lack of wood on the edge or corner of a piece of lumber. Generally, wane is permitted on one edge only, but it should not exceed one sixth of the width or thickness, or one third of the length of the member. Checks and splits, which are lengthwise openings from separations during seasoning, may reduce wood's resistance to shear. Checks and splits that extend through the entire thickness of the piece are not permitted. Shake is a separation along the grain, largely between the growth rings, which occur while the wood is seasoning. Shakes in members subjected to bending reduce the resistance to shear and, therefore, should be closely limited in structural members. Decay, which is a disintegration of wood, results from the action of wood-destroying fungi. It seriously affects the strength properties of wood and its resistance to nail withdrawal. However, if it is determined that the total amount of decay beneath the surface does not extend beyond the surface outline, the dimensional limitations for knots apply. Warp along the longitudinal axis of the lumber should not be more than 1 in. in 8 in. of length. Lengthwise, warp should not exceed $\frac{1}{8}$ in. in 4 in. of width. The acceptable range of moisture content in lumber used for skids, crates, and boxes should lie between 12% and 19%.

No opportunity should be overlooked to use materials besides wood or plywood for crate, box, or skid construction where practically and economically feasible. Steel alternatives for wood skid members may be the simplest substitution. For example, a 4-in. × 4-in timber may be replaced by a 3-in. × 4.1-lb steel channel iron or by a 3 in × 5.7-lb I-beam or by a 3-in × 3-in. × $\frac{1}{2}$-in.-angle iron. Wherever material substitutions are contemplated for heavy loads, they should be engineered for the specific purpose intended.

DESIGN

A proper analysis of forces to which skids, crates, and boxes may be subjected must include consideration of compression, lateral thrust, impacts, repeated handlings, abuse, tension, and inertial forces on the structure and the cargo. In this regard, it must be remembered that inertial loadings encountered aboard ship often exceed those encountered in the other modes of transportation.

Basic Design Criteria. Skids must be of Group IV woods and engineered for uniform or concentrated loads. Headers are to be bolted using washers and double nuts or upset threads. Skids are to be spaced not more than 48 in. apart and are to be of single-piece construction or, if over 12 ft long, spliced according to an approved method. The ends of skids are to be chamfered and are to rest on chamfered rub strips. Cargo is to be bolted or tension banded to skids using engineering design methods for determining the sizes of bolts and tension bands. For heavy loads, consideration must be given to the crushing strength of the wood or alternative material. Load-bearing floorboards can be analyzed as beams using the formulas for bending moment to determine the required section modulus. The allowable stress used in the formula for section modulus can be taken as 1000 psi. For hard woods, this allowable stress provides an adequate factor of safety. Where the distance between skids might exceed 48 in., it will be necessary to add an additional skid. The bending moment on the load-bearing floorboards, then, should still be calculated on the basis of the length between outside skids.

For example, suppose that a 15,000-lb load is to be supported on skids whose length has been determined to be 15 ft. Calculate the required timber size. Using the formula $\mathrm{BM} = (WL/6$, the bending moment will be 37,500 ft · lb. Then calculate the required section modulus = BM allowable stress = 450 in.^{3} Remember to multiply the bending moment by 12 to convert foot-pounds to inch-pounds. Because section modulus = $(bd)/6$, you can solve by trial and error by substituting cross-sectional dimensions as follows. Try a 10-in × 10-in. timber. This yields a section modulus of 166.7 in.^{3} Two skids of these cross-sectional dimensions yield a total of 333.4 in.^{3} It is obvious, then, that two 10-in. × 10-in. timbers do *not* provide the required section modulus (450 in.^{3}) for a quasi-uniform load. The next logical choice would be two 12-in. × 12-in. timbers. Note, however, that if the load is truly uniform ($\mathrm{BM}=WL/8$), then the required section modulus is only 337.5 in.^{3} The two 10-in. × 10-in. timbers then come close to making the required section modulus, and with the factor of safety provided by using the allowable stress of 1000 psi, the two 10-in. × 10-in. timbers would serve satisfactorily for a strictly uniform load. For most hard woods, the allowable stress of 1000 psi provides a comfortable factor of safety of approximately 1.5. In calculating the basic stresses for structural lumber, impact loading is generally ignored, but long-time loading and a safety factor are considered. A piece of wood will carry less load for a long time than it will for a short time. Consideration should be given to the expected interval of storage, i.e., short time versus long time. In addition, if research or historical data indicate that a particular port of loading and/or a particular port of discharge have a higher frequency of cargo claims because of rough handling, then timber sizes may be increased by applying an appropriate factor of safety or by requiring that the actual timber size be one full unit larger than derived by calculation. Remember that rub strips must be applied to the skids. An added precaution against the accidental loss of a rub strip is the use of reinforcing straps from the rub strip to the underside of the skid members.

Crates. In general, Groups II and III woods are to be used in crate construction except for skids, headers, and occasionally load-bearing floorboards that should be Group IV woods. All nails used are to be cement coated. Barbed, screw, or serrated nails are occasionally used, but for practicality and economy, cement-coated nails make the best selection.

All skid members in crate construction generally follow the same construction requirements as skid members used as skids alone. However, skid members sizes in crates can be substantially smaller in cross-sectional area, because in crate design, it is assumed that a large part of the load imposed by the contents is carried by the side panels acting as trusses. Therefore, large skids are not necessary as load-carrying members because the sides act integrally with the skids in this function. Although this assumption results in smaller size skids, it does not permit handling and moving a loaded base alone without the sides and ends fastened in place.

Crates may be either open or closed (sheathed). It is not always necessary to sheathe a crate if the contents do not require a degree of protection from the elements. Opened crates require less lumber and, therefore, if properly designed, can be less expensive to fabricate. This may not always be true, and to achieve greater economy, it is necessary to make an engineering economy analysis to determine whether an open crate or a sheathed crate is more economical in terms of labor and cost of materials. This article discusses the design and construction of open crates because the contents impose loadings on structural members that must be determined by either graphic analysis or engineering methods of resolving forces. The sides and ends, as well as some members of the base, are considered as part of a bridge truss. The Howe truss, with its parallel upper and lower chords and its vertical and diagonal members, has the same general pattern as the frame members of the side of a wooden crate. Because the truss is a framed structure composed of straight members, the stresses in the members caused by loads must be either compression or tension. The magnitude and character of the stress in each member can be determined. The required size of all tension members in the truss is determined by the formula $A = P/f$, where A is the required cross-sectional area of the member in square inches, P is the total load in pounds (as determined from the resolution of forces or from graphic analysis), and f is the working stress in pounds per square inch (in tension parallel to the grain). With support at each end, the major stresses in strut and lower frame members are tension stresses, and those in the diagonals and upper-frame members are compression stresses.

Compression members must be designed as columns, and column formulas must be used to determine their sizes. In crate design, essentially three column formulas are used. The selection of the proper formula depends on the unsupported length of the column, and columns are therefore classified as short, intermediate, and long. It is beyond the scope of this article to discuss the various factors and the application of these in the appropriate column formulas. The *Wood Crate Design Manual* (2) is an excellent reference text for the more determined crate builder. It must be remembered that it is most probable that crates of similar dimensions will be stacked vertically (one on top of the other) aboard ship or in storage. If crates are of exactly the same overall dimensions, then the corner posts will carry the superimposed loads as columns. These anticipated superimposed loads must be included in the strength analyses. If superimposed loads consists of smaller crates or other types of loads that do not rest on the corner posts, then the structural members of the top panels will be subjected to bending as well as to compressive loadings that result from handling, especially with slings or chains. Therefore, these structural members must be analyzed as beams subjected to bending and axial compression. If highly concentrated loads (in the center third of the crate) are to be crated, the skid depth must be increased. This, however, will be apparent if the side panels are properly analyzed.

Crates should not be higher than they are wide (even well-constructed, durable shallow crates are acceptable; see examples in Figure 9). Side panels are to be divided by a suitable number of vertical members so that diagonals are as close to a 45° angle as possible. Top and bottom horizontal and vertical members are to be through members (extend to full extent of length and height dimensions). All end panels are to have one or more diagonals. Avoid splicing members less than 16 ft long. Splicing, where required, must be accomplished using an approved method. Intersections of diagonals are to be reinforced using plywood gussets or lumber bridge.

If the crate height exceeds 72 in., a through intermediate horizontal member is required at midheight of the crate. Side-panel width (ie, between vertical members) must not exceed 42 in. The geometry of the panels must be altered to add an additional panel so that panel widths do not exceed 42 in. Lower horizontal members are to rest on the ends of the floorboards with notches cut in headers and load-bearing floorboards to accept these lower horizontal members. Vertical and diagonal members must be in the same plane and to the outside of the horizontal

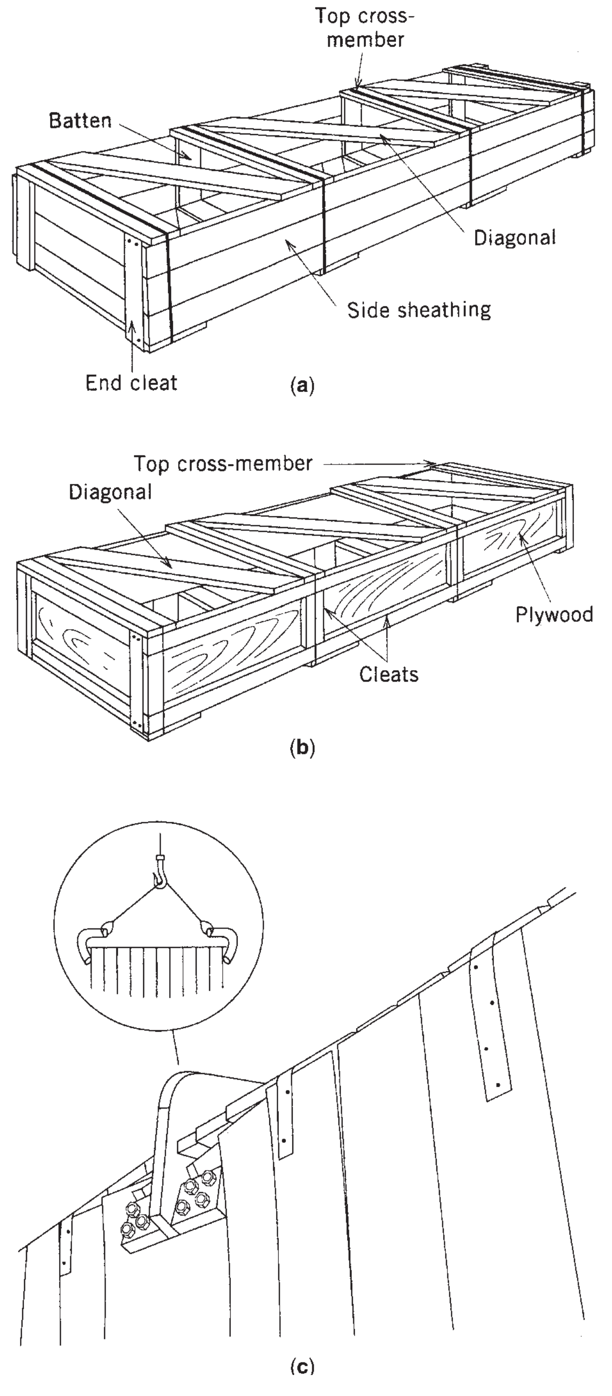

Figure 9. (**a,b**) Typical shallow crates [(**a**) lumber; (**b**) plywood]; (**c**) crate damage caused by a grabhook when insufficient joint support was available in the top of the crate (2).

members. Side-panel diagonals should slope from the top of a vertical member down to the skid base.

The end-panel design should not exceed 42 in. in width. End panels for crates with a skid width in excess of 42 in. will require intermediate vertical members. End panels for crates with more than two skids will require a vertical member above each skid. Filler strips will be required to allow end-panel vertical members to rest across the ends of skids. The filler strips will fill the void between the headers and the lower horizontal members.

Top panels are critical because most members will be in compression under the influence of various types of materials-handling equipment and superimposed loadings. Top-panel lateral and diagonal members will be in the same plane and rest on the longitudinals and extend to their edges.

Where protection from the elements is essential or to meet customer requirements, a sheathed-crate, either $\frac{3}{4}$-in. lumber or $\frac{1}{2}$-in. plywood (C–D, exterior glue) sheathing can be used. Reinforcement strapping is required on all corners and at all intermediate, horizontal, and vertical member junctures after the crate is assembled.

Where crate items require additional protection from the elements, as discussed earlier in this article, appropriate steps must be taken in the early stages of crate construction to apply the required crate liner between internal framing and external sheathing. If the crate is not to be watertight, then sufficient ventilation must be provided. If the contents are to be provided with waterproof protection, then the item must be properly and totally wrapped with either asphalt-laminated kraft paper or polyethylene film and sealed with waterproof tape in addition to the crate liner material.

The strength and rigidity of crates are highly dependent on the fastenings. Nails, lag screws, bolts, screws, and metal connectors are the most important fastenings in crate construction. This article briefly covers nails and nailing rules. Refer to Anderson's treatise on nailing better wood boxes and crates (3) for a more complete discussion of nails and nailing rules. Cement-coated nails are being more widely used today than ever before, primarily because many crate builders use automatic nailing equipment more readily amenable to the use of belted cement-coated nails. Nails should be driven through the thinner member into the thicker member where possible and should penetrate both members, leaving a minimum of $\frac{1}{4}$ in. for clinching. Clinching is one of the best methods of increasing effectiveness of nails. It is used almost entirely in the fabrication of crate panels, except when frame members or other crate parts are >2-in. thick. Clinched nails have 50 to 150% greater withdrawal resistance than unclinched nails when driven into dry wood. Predrilling the wood before the nails are driven may be necessary to prevent splitting in dense woods or with nails of large diameter. Nails should not be overdriven. They should be positioned no less than the thickness of the piece from the end or half the thickness of the piece from the side edge. When members (both of which have ≥ 3-in. thickness) are joined together, bolts are to be used. Nails should be staggered to prevent any two nails from entering the same grain line of any board. Follow approved nailing techniques as outlined in the handbook described above.

Where practical, the use of tension bands will provide an added degree of a reinforcement to the crate assembly. Tension bands should be tight enough to cause a light crushing of the ends of the main structure over which they pass. Tension bands should be stapled to prevent their movement during transportation and handling.

A crate can be assembled before or after loading the item on the skid base, whichever is appropriate, but internal blocking and bracing of the item in the crate must be done at the time the item is set on the skid base. The blocking and bracing must be of substantial design and construction to prevent the free movement of the item within the crate caused by the forces encountered in transportation and handling. Blocking and bracing are not to be taken lightly. The inertial loading on the crate and its contents aboard ship often exceeds twice that encountered in the other modes of transportation.

Boxes. Boxes are not to be used for loads in excess of 5000 lb or lengths in excess of 16 ft. Groups II and III woods are to be used. All nails are to be cement coated. Boxes that exceed 200 lb gross weight will require 2-in × 4-in. rub strips. When any unsupported span of top, end, or side lumber exceeds 36 in., additional interior battens or cleats will be required. Cleated plywood boxes for loads over 1000 lb must have load-bearing bases with properly sized skids, headers, and rub strips and are to be nailed in accordance with the preceding nailing rules. All boxes require tension bands sized according to the load and arranged in two directions passing over cleats or battens.

Bands should be stapled to prevent movement and should be tight enough to cause light crushing of the corners of the members over which they pass. If a boxed item is of large mass (weight), appropriate filler or cushioning materials filling the voids around the item may not be effective. Therefore, dunnage or blocking and bracing, where practical, should be used. Where the boxed item requires protection from the elements, the internal surfaces of the box may be lined as described under crates and the item itself should be properly preserved.

UNITIZATION AND PALLETIZATION

Unitization provides a more economic package than individually shipped pieces. It also provides ease of handling and storage and provides a greater degree of protection than individual units. Pipe and conduit are easily bundled. They may require special plastic end protectors to protect internal or external threads. The ends of bundled pipe can be boxed or completely covered with double- or triple-wall fiberboard secured with tension bands. In addition, long bundles may be bucked. *Bucks* are wooden frames that surround the girth of the bundle. They are to be nailed at the right angle junctures and be tension banded. Tension bands are to be stapled to prevent accidental loss of the bands. Bucks should be located at 5-ft maximum intervals.

Lumber and paneling are usually bundled. Care must be taken to avoid overtensioning bands that will mar their edges. Paneling should be covered with water-resistant paper or polyethylene film.

Coiled wire can be bundled. Because of the historically poor bundling methods used for wire, substantial losses have occurred. Consignees frequently use coiled wire to make nails, screws, and bolts. Kinked or crooked wire will interfere with the extrusion process, and substantial claims may arise.

Lumber and paneling can also be bundled. Care must be taken to ensure that tension bands do not damage the items bundled. Coiled wire can be bundled. The usual problem encountered here is when tension bands or wrapping wires comes off, allowing the coils to become disarranged or crushed. The consignee usually has a specific machine set up for manufacturing items such as bolts, screws, and rods. Hence, damage to the coils can result in a claim.

Palletization is best for similar-size fiberboard cartons, drums, and coiled sheet steel. Do not overload or stack the items too high. Overloaded pallets break. An excessively high stow can result in crushing of the cartons in the lower levels. Then, more damage occurs when the otherwise neat stacking falls apart. In-transit handling of broken-down pallets usually results in additional abuse. Fabric or steel banding is usually one of the best methods of securing an entire unit load. It may be advisable to employ vertical and horizontal corner protectors to eliminate banding damage. Shrink wrapping provides a high-strength securement to a palletized load. It can also be applied to protect against contact with water.

Palletized drums must be fitted with partially framed tops to allow for safe use of tension bands. Tensioning of the bands must not cause damage to the pallet load-bearing boards or to the cargo. Fiberboard sheets across the top and partially down the sides of drums will serve to keep the tension bands positioned and provide a level surface for stacking other pallets.

In general, old or badly worn pallets should not be used. Pallets can be repaired. Some companies use secondary reusable pallets with good success. Still, old wood and loose nails can result in broken pallets that invite further abuse in handling.

CONTAINER PROBLEMS

Containers are subject to the same shock and vibration forces as are over-the-road trailers and railroad cars. In addition, high inertial loadings are experienced by the contents as a result of swaying, pitching, rolling, heaving, yawing, and surging of a ship at sea.

The major causes of damage to containerized cargoes are improper stowage, inadequate dunnage, lack of security, overloading, and poor weight distribution. Any assumption that the container is a substitute for safe stowage and handling is an invitation to disaster. A good rule to adopt is to stow and secure for the worst conditions.

Containers may travel to seaport by railroad. Constant vibration and occasional sharp humping forces must be taken into consideration. When loading a container for sea transport, always consider the six basic ship motions: yaw, heave, sway, pitch, roll, and surge. Occasionally heavy seas will have a pronounced effect on cargoes in containers.

Blocking and bracing is essential to the safety of the cargo. Materials commonly used for securement are lumber, plywood, strapping, fiberboard, and inflatables. Lumber can be used as a filler for decking, blocking and bracing, and constructing partitions. Plywood can be used as a partition, divider, and auxiliary decking.

Heavy-duty strapping can be used to separate cargo and to tie down heavy and awkward items. The strapping must be firmly anchored and properly tensioned for the greatest effectiveness. Fiberboard is available in sheets, rolls, and structural shapes and can be used for light-duty bracing, as dividers, decks, and partitions. Inflatables are available in paper or rubber and may be reusable or disposable. They are expensive and not recommended for voids in excess of 18 in. Inflatables are used for light- and medium-duty bracing.

Condensation is another major cause of damage to cargo. It is not generally known that fiberboard boxes and crate or dunnage lumber contribute to the generation of water vapor in sea containers. Furthermore, in changing temperature and humidity conditions, condensation can form within containers and drip down from the overhead onto moisture-sensitive packaging and cargoes. These conditions can be remedied, in part, by using seasoned lumber for dunnage and crate construction. Adequate (prepackaging) preservation of moisture-sensitive items can be the best method of protecting against water damage. Overwraps such as canvas or polyethylene sheeting will serve to divert condensation that drips from the overhead. With some types of cargoes, it may be necessary to provide completely waterproof liners or wraps constructed VCI/VPI or desiccant materials. Cargoes are more likely to be subjected to condensation and water damage over a long time interval such as long transportation distances or long-duration storage. Therefore, it is incumbent on the shipper to consider all these factors when preparing cargo for export.

The annual report of the Cargo Loss Prevention Committee of American Institute of Marine Underwriters contained valuable advice on the use of containers in shipping. Extracts from the report follow:

> Normal reaction is for a shipper to use domestic packaging and consider the container as an additional protection. It is our experience that containers may leak and the cargo must be protected against moisture and water damage. Additional emphasis is needed on the use of dunnage and tight packing in containers.
>
> Several offices report that losses have been experienced due to defective containers. Many shippers do not employ adequate container inspection procedures. It appears that some insureds think that because their goods are containerized the packing can be of a minimal nature. Our experience continues to show that such minimally packed goods are likely to be damaged by rain and/or seawater when shipped in poorly maintained containers.
>
> Many shippers continue to use containers as a means of packaging and claims due to crushing, water damage and improper or inadequate stowage, especially of heavy machinery, continue to be a problem.
>
> Losses have also been experienced where shipments of high value electronic units have been made in containers. The units are secured on lumber bases which in turn are then secured to pallets with the units being entirely shrouded in polyethylene sheeting which also encompasses the wooden base to which the units are attached. It was found that these wooden bases were constructed of green or improperly dried lumber, which gave off moisture, which became trapped in the polyethylene shrouding. During the course of transportation, fluctuations in temperature caused this moisture to condense on the exposed metal areas of the electronic unit, causing serious damage.
>
> We have also observed that machinery which is top heavy has on occasion been stowed in containers without adequate bracing and precautions to prevent the machine from tipping. On one occasion, a container loaded with tractor engines arrived at destination with every engine damaged, as a result of their center of gravity being high. Although the engines were braced along the floor of the container, and would prevent lateral or fore and aft movement, there was no bracing up higher and with their relatively high center of gravity they tipped, coming in contact with one another, causing damage. Shippers should be cautioned to be aware of the center of gravity of machinery and other heavy or odd sized pieces being shipped in containers and adequate bracing to prevent tipping should be done.
>
> Although containerization of cargo continues to grow worldwide, the packing of goods into house to house containers by shippers, as well as securing of the goods in the containers, continues to be a cause for concern. We find in many instances cargo to be damaged by condensation within the container and/or by extreme heating or freezing. Once a container is loaded and the doors securely shut, the only way in which the outside weather can affect the cargo is through changes in the temperature.
>
> Unless the internal temperature of the container is controlled by mechanical or other means, the temperature of the air inside the container will follow the temperature of the air outside. Extreme fluctuations in the air temperature can cause condensation to settle on the cargo; if the container is exposed to very high temperatures, the cargo within the container may sustain damage or, if the container is exposed to extremely low temperatures, the cargo can be damaged, such as change in the chemical state of some goods (eg, drugs) making them useless and sometimes dangerous, or freezing of bottled liquids with subsequent bursting of bottles.
>
> Taking into account the anticipated voyage, its length, and temperatures normally expected to be encountered, consideration should be given to goods which are susceptible to damage by extreme heat or cold by shipping them in insulated or refrigerated containers where the temperature inside the container can be controlled to some degree.
>
> In other cases, certain precision machinery or electronic equipment may require the use of VCI, VPI or powder desiccants. It must be pointed out, however, that in order for these moisture control measures to take full effect, the packaging and packing must be *totally* sealed.

SHIPPING LOSSES AND INSURANCE

Under normal conditions of domestic rail shipments, material loaded in open cars is inspected by railroad representatives before the car is moved, and the railroad assumes responsibility. In closed cars, however, the Association of American Railroads rules are not mandatory and are used only for guidance. Closed cars are not ordinarily inspected, but if damage occurs to the contents, they are inspected at the destination to determine the cause before a settlement is made.

Export shipping companies are specifically exempt from most forms of liabilities under the laws of many countries. The exceptions to this usually include loss or damage due to negligence in proper loading, custody, or delivery of the goods.

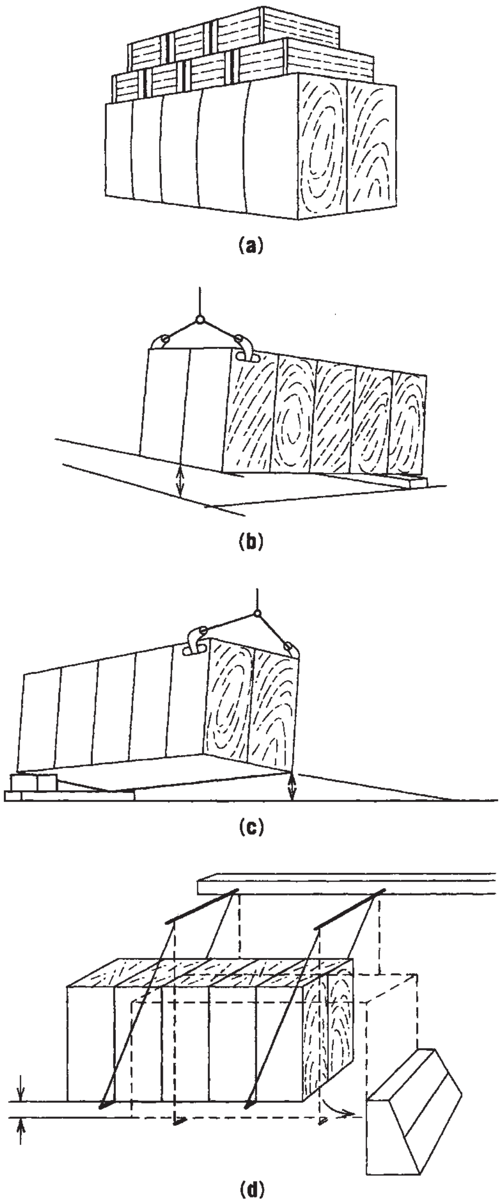

Figure 10. Rough-handling tests for crates; (**a**) superimposed load; (**b**) edgewise drop; (**c**) cornerwise drop; (**d**) pendulum impact (2).

The shipper or consignee must assume responsibility for all remaining risks during the shipment.

To prevent loss to the shipper, a form of marine insurance covers these losses. Marine insurance may be obtained to cover such perils as pilferage, theft, and leakage, as well as loss or damage if the ship should sink, burn, or be involved in a collision. However, the more hazards covered by the policy, the higher the rate, so it is not economical to pay for broader protection than is actually required.

Rates in marine insurance are rather complex and are not fixed. They depend on, among other things, the type of vessel, the route, the perils insured against, the type of packing used, and the loss record of the shipper. This latter factor reflects the type of container and the method of cushioning, blocking, and bracing used by the shipper, because well-constructed and well-packed crates will normally receive little damage during the voyage. A shipper who uses adequate containers pays lower rates. Underwriters keep statistical records of shippers with whom they deal and allow lower rates for those with good records.

DAMAGE AND CLAIMS

Too frequently one or more of the three steps in preparation for shipment are less than adequate, and this will inevitably result in damage of one type or another to the cargo. Precision machinery shipped long distances or subjected to long-term storage without adequate preservation will rust. Electronic equipment shipped without serious consideration being given to adequate protection from vibration and shock will sustain physical damage. Items requiring a degree of dimensional stability (rigidity) will be damaged if the packaging and packing is not properly engineered and constructed. One way to ensure greater construction durability is by preshipment damage testing of crates or other containers (see Figure 10).

With regard to containerization (sea containers), a tremendous number of cargo losses occur each year because of ignorance of the proper use of these containers, specifically the requirement for adequate blocking and bracing and protection of the cargo against condensation. It is imperative that the shipper understand that the use of sea containers does not guarantee that the cargo will be received by the consignee in sound condition.

A major marine insurance company has made an analysis of principal causes of losses and found that, in the “handling and stowage” category, 39% of all losses are caused by container damage including breakage, leakage, and crushing. In the “water damage” category, 10% of all losses are from fresh-water, sweat, and saltwater damage. Nevertheless, it concludes that 70% of all cargo losses are preventable.

CONCLUSION

In summary, shippers would do well to have as their first concern ensuring that the goods reach their customers in sound condition, and to that end, the author hopes that this article is a valuable aid.

BIBLIOGRAPHY

1. U.S. Department of Agriculture, *Wood Handbook*, Agricultural Handbook No. 72, Forest Products Laboratory, Madison, WI, 1974.
2. U.S. Department of Agriculture, *Wood Crate Design Manual*. Agricultural Handbook No. 252, Forest Products Laboratory, Madison, WI, 1964.
3. L. O. Anderson, *Nailing Better Wood Boxes and Crates*, Agricultural Handbook No. 160, USDA, 1959.

General References

Code of Federal Regulations, 49 *CFR* Parts 100–199, Subparts D and E, Office of the Federal Register, National Archives and Record Service, Oct. 1978.

J. P. Colletti, *Export Packing in the Marine Environment*, U.S. Department of Commerce, *Damage Prevention in the Transportation Environment*, Mechanical Failures Prevention Group, National Bureau of Standards, Gaithersburg, MD, Oct. 1981, pp. 8–37.

Departments of the Army, Navy, and Air Force, *Packaging of Materiel: Preservation*, Vol. 1, Manual DSAM 4145. 2, 1976.

W. Friedman and J. Kipnees, *Distribution Packaging*, Krieger, New York, 1977.

J. F. Hanlon, *Handbook of Package Engineering*, McGraw-Hill, New York, 1971.

U.S. Department of Transportation, *A Shipper's Guide to Stowage of Cargo in Marine Containers*, Maritime Administration, Washington, DC, 1982.

MATERIALS HANDLING

Stephen A. Raper
The University of
Missouri-Rolla, Rolla, Missouri
Colin Benjamin
Florida A&M University,
Tallahassee, Florida

INTRODUCTION

The Industrial Revolution of the late 18th–early 19th century saw the introduction of powered machines to replace manual labor in accomplishing the same or similar tasks. Consequently, gains in labor and productivity per worker-hour of individual workers were accomplished. Moreover, this time period observed the transition from a "domestic system" to a "factory system." Concurrently, the need for materials-handling systems (MHSs) increased to meet the needs of the more "productive" factory system. Initially, this need was for labor-saving devices to handle material in manufacturing and distribution (1, 2). However, in today's competitive and global marketplace, the rationale for materials-handling systems is multifaceted.

The "cost" estimates for materials handling vary in nature. Generally materials handling does not add value to the product, but it can and does add to the final product costs. Estimates of this cost range from as little as 20% up to 90% in some cases. Conversely, however, efficiently designed materials-handling systems have been known to reduce a plant's operating cost by 15–30% (3). This figure could vary depending on the industry and product categories. For example, the food-processing industry would have a fairly high per-unit cost, whereas an industry that uses tanks and pipes would have a significantly lower per-unit cost.

The potential costs and benefits associated with materials-handling systems are significant and thus impact our domestic and global competitiveness. This article provides an overview of materials-handling principles and guidelines, and it relates these to the field of packaging. Generalized definitions, objectives, principles, and examples of materials-handling checklists are included. Brief discussions on equipment are also presented, as well as approaches toward the design of materials-handling systems. Because of the strong relationship between facilities layout and materials handling, a brief section on techniques for facilities layout is also included. A final section showing the relationship between packaging and materials handling concludes the article.

DEFINITIONS

Simplistically and intuitively, *materials handling* is defined as handling material. However, various authors define this term in increasingly comprehensive manners. Meyers (4) indicates that materials handling is "the function of moving the right material to the right place, at the right time, in the right amount, in sequence, and in the right position or condition to minimize production costs." He also states that materials handling involves the handling equipment, the storage facilities, and the control apparatus. Tompkins and White (5) similarly state that materials handling uses the right method to provide the right amount of the right material at the right place, at the right time, in the right sequence, in the right position, in the right condition, and at the right cost. Again, the emphasis is more than just handling materials. Storage and control are also important. Time utility—the right material at the right time—and place utility—the right material at the proper place—are also emphasized. They also point out that materials handling can be described in terms of quantity, position or orientation, condition, space, profit, quality, safety, and productivity, which are also significant factors relative to packaging.

Gelders and Pintelon (2) offer the following definition from an engineering point of view: "the art and science involved in picking the right system, composed of a series of related equipment elements or devices designed to work in concert or sequence in the movement, packaging, storage and control of material in a process or logistics activity." Sims (6) states that materials handling includes the movement of liquids, bulk solids, pieces, packages, unit loads, bulk containers, vehicles, and vessels. He also defines a materials-handling system as a series of related equipment elements or devices designed to work in concert or sequence in the movement, storage, and control of material in a process or logistics activity, where each system must be custom designed for each unique application. Finally, Sims (6) states that materials handling is the portion of the business and economic system that affects the physical relationship of material, products, and packaging to the product, process, facility, geography, or customer without adding usable worth or changing the nature of the products.

Clearly, materials handling is more than "handling materials." It is a complex, multifaceted activity that extends beyond the physical confines of a manufacturing facility. Properly designed materials-handling systems, although not adding value to a product, have the potential to minimize overall costs, and even in the case of product/package-delivery systems, impact the end-use customer or consumer.

OBJECTIVES OF MATERIALS HANDLING

It is generally accepted that the primary goal of material handling is to have the least possible handling, i.e., less handling at less cost leading to reduced costs of production. However, a more specific and comprehensive set of objectives that more accurately reflects the diverse nature of materials handling, as stated by Gelders and Pintelon (2), are as follows:

- To increase the efficiency and effectiveness of materials flow
- To increase productivity in manufacturing (plant) or in distribution (warehouse)
- To increase space and equipment use
- To improve safety and working conditions
- To reduce materials-handling costs
- To avoid high capital requirements
- To ensure a high level of systems flexibility, reliability, availability, and maintainability
- To improve integration between materials and information flow
- To smooth the flow of materials through the logistics pipeline (from supplier to final customer)

How can these objectives be achieved via appropriate materials-handling system design? The following section provides guidance on basic principles, checklists, and critical questions that may be used to meet one or more of the above objectives.

BASIC PRINCIPLES OF MATERIALS HANDLING

To meet the primary goal of materials handling, as well as the expanded objectives listed above, a list of principles based on accumulated knowledge and practice of experts in the field has been developed. The list of 20 principles adopted by the Materials Handling Institute Inc. provides rule-of-thumb advice that facilitates optimized materials-handling system design and also serves to help develop checklists relevant to the system under focus. A slightly modified version (2) is shown in Table 1. These 20 principles provide an initial frame of reference to begin the design of a new materials-handling system, make modifications to an existing system, or analyze a system to determine whether it is meeting predetermined objectives.

METHODS OF ANALYSIS

Analysis of existing or proposed materials-handling systems can be approached in either a qualitative or quantitative manner. To facilitate the analysis of a materials-handling system in general, Tompkins and White (5)

Table 1. Basic Principles of Materials Handling

1. *Planning:* Study the problem thoroughly to identify potential solutions and constraints and to establish clear objectives.
2. *Flow:* Integrate data flow with physical materials flow in handling and storage.
3. *Simplification:* Try to simplify materials handling by eliminating, reducing, or combining unnecessary movements and equipment.
4. *Gravity:* Use gravity to move materials wherever possible, while respecting limitations concerning safety and damage.
5. *Standardization:* Standardize handling methods and equipment wherever possible.
6. *Flexibility:* Use methods and equipment that can perform a variety of tasks.
7. *Unit load:* Handle products in as large a unit load as possible.
8. *Maintenance:* Plan maintenance carefully to ensure high system reliability and availability.
9. *Obsolescence:* Make a long-range plan, taking into account equipment life-cycle costs and equipment replacement.
10. *Performance:* Determine the efficiency, effectiveness, and cost of the materials-handling alternatives.
11. *Safety:* Provide safe materials-handling equipment and methods.
12. *Ecology:* Use equipment and procedures that have no negative impact on the environment.
13. *Ergonomics:* Take human capabilities and limitations into account while designing a materials-handling system.
14. *Computerization:* Consider computerization wherever viable for improved materials and information control.
15. *Utilization:* Try to obtain a good use of the installed capacity.
16. *Automation:* Consider automation of the handling process to increase efficiency and economy.
17. *Operation:* Include operating costs (energy) in the comparison of materials-handling alternatives.
18. *Integration:* Integrate as much as handling and storage activities into one coordinated system, covering receiving, inspection, storage, transportation, production, packaging, warehousing, and shipping.
19. *Layout:* Keep in mind that layout and materials handling are closely linked and that an interactive procedure is often needed to obtain their best coordination.
20. *Space use:* Choose the material handling equipment so that effective use is made of all (cubic) space.

Source: Reprinted with permission from Materials Handling Institute, Inc.

propose modifying the well-known engineering design process as follows:

1. Define the objectives and scope for the materials-handling system.
2. Analyze the requirements for handling, storing, and controlling material.
3. Generate alternative designs for meeting materials-handling system requirements.
4. Evaluate alternative materials-handling system designs.
5. Select the preferred design for handling, storing, and controlling material.
6. Implement the preferred design, including the selection of supplies, training of personnel, installation, debug and startup of equipment, and periodic audits of system performance.

Several other authorities in the field also suggest using this approach. Utilizing the expanded list of objectives and the principles of materials handling serves to address step 1 of this process. The next four steps can be approached qualitatively, or quantitatively. A qualitative analysis may take a questioning approach with yes/no or scaled/weighted answers. Basic questions to consider asking when addressing the system under study include “why,” “what,” “where,” “when,” “how,” and “who,” and “which.” More specifically, and at a *minimum*, Tompkins and White suggest asking and answering a set of questions as shown in Table 2 (see also Figure 1).

Table 2. Basic Materials-Handling System Design Questions

- Why
  - Is handling required?
  - Are the operations to be performed as they are?
  - Are the operations to be performed in the given sequence?
  - Is material received as it is?
- What
  - Is to be moved?
  - Data are available and required?
  - Alternatives are available?
  - Are the benefits and disbenefits (costs) for each alternative?
  - Is the planning horizon for the system?
  - Should be mechanized or automated?
  - Should be done manually?
  - Shouldn’t be done at all?
  - Other firms have related problems?
  - Criteria will be used to evaluate alternative designs?
  - Exceptions can be anticipated?
- Where
  - Is materials handling required?
  - Do materials-handling problems exist?
  - Should materials-handling equipment be used?
  - Should materials-handling responsibility exist in the organization?
  - Will future changes occur?
  - Can operations be eliminated, combined, or simplified?
  - Can assistance be obtained?
  - Should material be stored?
- When
  - Should material be moved?
  - Should I automate?
  - Should I consolidate?
  - Should I eliminate?
  - Should I expand?
  - Should I consult vendors?
  - Should a postaudit of the system be performed?
- How
  - Should materials be moved?
  - Do I analyze the materials-handling problem?
  - Do I sell everyone involved?
  - Do I learn more about materials handling?
  - Do I choose from among the alternatives available?
  - Do I measure materials-handling performance?
  - Should exceptions be accommodated?
- Who
  - Should be handling materials?
  - Should be involved in designing the system?
  - Should be involved in evaluating the system?
  - Should be involved in installing the system?
  - Should be involved in auditing the system?
  - Has faced a similar problem in the past?
- Which
  - Operations are necessary?
  - Problems should be studied first?
  - Type equipment (if any) should be considered?
  - Materials should have real-time control?
  - Alternative is preferred?

Source: Reprinted with permission from Tompkins and White (5).

This “questioning attitude” leads to the basic equation of developing the best materials, moves, and methods to arrive at the preferred system. Some issues to consider in this equation include the type of materials and their physical characteristics, the quantities of the materials to be moved, frequency of moves, sources of moves, and methods by which this may occur.

Numerous checklists are available in the literature that aid in qualitative analysis and help to answer the basic questions listed above (2, 4–6). It should be noted that any checklist may have to undergo a certain amount of modification to fit the system at hand. Certain aspects of the checklist may not be appropriate, or additional aspects may be required. However, the previous stated objectives as well as the principles of materials handling can facilitate selection or development of checklists for use as a qualitative analysis tool. One such example of a recent checklist as compiled by Gelders and Pintelon (2) is shown in Table 3.

Quantitative analysis can provide an objective basis to evaluate MHSs as compared with the more subjective qualitative techniques. This may include computing measures such as *efficiency*, which can be defined as the theoretical computed input divided by the actual consumed output; *effectiveness*, which is the actual achieved output divided by the theoretical expected output; and *productivity*, which is defined as output over inputs. Gelders and Pintelon (2), among others, refer to these as performance indicators (a related discussion of these issues can be found in the article by Zepf in this Encyclopedia). For instance, throughput time (cycle time) is one measure of effectiveness, use of warehouse space, or pallet space (unit load) is a measure of efficiency, and productivity may be measured in terms of labor

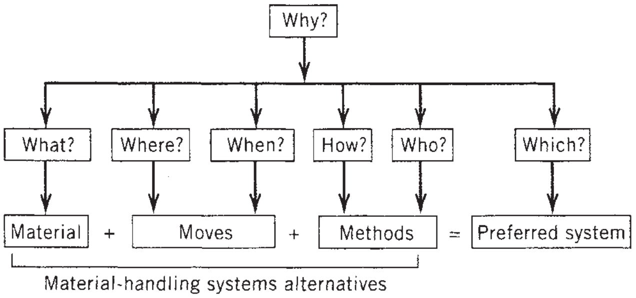

Figure 1. Basic equation for materials-handling system design. Reprinted with permission from Tompkins and White (5).

Table 3. Checklist for MHS

- General questions
  - *Topic:* Global aspects of the MHS
  - *Examples:* Is the MHS flexible enough to cope with changing product volumes and mixes, throughput and service needs, technology options, customer requirements, etc.?
    - Is the MHS integrated with the production system? Are interfaces with other business functions working okay?
    - Is standardization a main concern while investing in new equipment?
    - Has the company clear objectives concerning the degree of automation to apply to the MHS?
- Specific questions
  - *Topic:* Different areas of (and interfaces with) the MHS
  - *Examples:*
    - Receiving, including dock operations and inspection
      - Does the dock equipment match the types of warehouse help to reduce energy costs?
      - Could doors between dock and warehouse help to reduce energy costs?
      - Do quality control and inspection reports satisfy the needs of the customer, i.e., the manufacturing process?
    - Storage
      - Are there any unnecessary packing-unpacking operations needed because of a lack of standardization or choice of the wrong unit load?
      - Is the storage equipment sized correctly for the material stored?
      - Is the tradeoff between storage density and selectivity optimized?
    - Handling operations in the manufacturing process
      - Is there any backtracking in the flow path?
      - Are there any areas with traffic congestion?
      - Is production work delayed because of poorly scheduled delivery and removal of material?
    - Other picking
      - Are travel distances between picks minimized where possible?
      - Would a part-to-picker instead of a picker to part system improve the picking operations?
      - Are low-activity items out of the way but accessible to pickers when necessary?
    - Packaging
      - Are mispicked orders corrected in a timely manner?
      - Is volume sufficiently high to justify addition of automatic packing equipment to replace manual operations?
      - Did you make the right choice between strapping, wrapping, etc.?
    - Shipping
      - Are receiving and shipping operations separated so that they do not interfere?
      - Are the shipping operations well planned?
      - Would additional equipment speed up the loading operations?
  - Information flow and data collection
    - *Topic:* The amount and type of data collected, the data processing, and information flow accompanying the material flow
    - *Examples:*
      - Does a computerized database of inventory information exist?
      - Does each stockkeeping unit have a unique identification number?
      - Is there a satisfactory performance reporting?

Source: Reprinted with permission from Gelders and Pintelton (2).

components relative to the materials-handling function. Comparing these or other measures against predefined targets may help to direct modifications to the entire MHS, or only portions of the same.

Overall MHS analysis may be accomplished through the use of simulation software. The software can be used to compare various alternatives against specified criteria and to perform what-if analysis (7–9). Most current simulation software packages offer animation capabilities that allow the designer to see dynamic representations of the system under study. Specialized software such as CAPE (10) or TOPS (11) may be used to focus on palletization and the unit-load concept as well as optimized package design. Simple spreadsheet analysis that uses macro programming may also be used for this purpose. Beyond ones own operations, benchmarking, that is, comparing one's own strengths and weaknesses to a competitor, may also be applied relative to materials-handling analysis.

One of the earlier structured approaches to MHS analysis was developed by Muther and Haganas (12). Their method, systematic handling analysis (SHA), was developed from the premise that any analysis must depend on material, moves, and methods. They describe the approach as "an organized, universally applicable approach to any materials-handling project," consisting of a "framework of phases," "pattern of procedures," and "set of conventions." They further identify four phases as "external integration," "overall handling plan," "detailed handling plan," and "installation." The total methodology makes extensive use of charts, checksheets, flow charts, and detailed procedures. In short, the method provides a systematic approach to determine solutions to materials-handling problems. When used in conjunction with the basic principles of material handling, it can provide a powerful framework for identifying good solutions to material handling problems.

PLANT LAYOUT AND FACILITIES LAYOUT

Materials handling is an integral part of plant layout. Conversely stated, plant layout is an integral part of materials handling (the proverbial chicken and egg). In short, both MHS design and plant layout design must go hand-in-hand. A cursory review of the stated objectives of materials handling and the MHS principles reveals commonalties, for instance, increase space and equipment use and improve safety and working conditions (objectives), flow, utilization, and space use (principles). These objectives and principles, to name just a few, are also pertinent to effective facilities and plant layout.

Facilities layout, much like material handling, is a volumous subject in and of itself. However, for the purposes of this chapter, some methods of analysis are briefly discussed. The techniques used may be simple or complex, and either quantitative or nonquantitative. Tompkins and White (5) provide a comprehensive discussion of the subject matter. The most basic method to determine layout design is by way of scaled templates of the facility, machinery, material, and people. The templates can be arranged using heuristics to determine the most appropriate layout. This can be accomplished with the aid of computer-aided-design (CAD) packages. When areas of a facility can be departmentalized, matrix techniques such as from–to charts, or "closeness" charts may be used. If some objective such as minimizing materials-handling costs, or minimizing distances traveled can be identified, several optimization models may be used (13).

A complete methodology, *systematic layout planning* (SLP), developed by Richard Muther, and similar in nature to systematic handling analysis (SHA) also is effective for use in existing or new facilities. Similar to SHA, it consists of a framework of phases, a pattern of procedures, and a set of conventions. In general the process includes four overall phases of establishing a location, planning the general overall layout, preparing detailed layout plans, and finally installation at the facility. Also like SHA, the method is logical in nature, includes detailed graphic procedures, and leads to good solutions based on the initial inputs.

Numerous computer software programs have been developed which address facilities layout. Three such programs are ALDEP (automated layout design program), CORELAP (computerized relationship layout planning), and CRAFT (computerized relative allocation of facilities technique) (13). More recently, factory CAD, factory plan, and facility plan flow suite of facilities-planning software (14) has been introduced based largely on the procedures pioneered by Muther. Programs such as these are useful when problems are large and complex. However, they are not guaranteed to provide optimum solutions. Experience, judgment, and intuition are still necessary when using this or other kinds of software.

MATERIALS-HANDLING EQUIPMENT, MATERIAL, AND METHODS

An abundance of materials-handling equipment exists for various applications. Usually, there are multiple choices for each application. The literature for materials handling contains guidelines, tables, and classification schemes to help in selecting the right equipment for the right purpose (1, 3). Furthermore, the proper use of the principles of materials handling and appropriate checklists, in line with stated objectives, can also serve to identify the right equipment for the given application. In general, the three broad categories of materials-handling equipment are trucks, conveyors, and cranes and hoists. In the total systems concept, storage devices such as pallet racks and bins, automated storage, and retrieval systems are also included; pallets, slipsheets, and returnable containers are examples of material and methods.

MATERIALS HANDLING AND PACKAGING

The previous sections of this article discussed general principles, objectives, and techniques of materials handling in a broad sense without reference to a particular industry or manufacturing application. However, as the most comprehensive definition (6) stated earlier implies, the issue of material handling is usually not singular in nature but is indicative of a more complex and comprehensive system. Consequently, materials handling can be approached from a systems perspective. Figure 2 illustrates the extent to which a systems view can be taken. This view shows an inclusive life-cycle approach that includes the supplier of the basic raw material and extends to disposal of the product and package. Decision-making criteria related to material handling, therefore, should extend beyond the confines of the "manufacturing" facility, or process, to include issues related to packaging, distribution and warehousing, wholesale or retail, the consumer, and solid waste.

Packaging, like materials handling, can also be viewed from a systems approach as shown in Figures 3 and 4. Figure 3 shows the broad, interdisciplinary nature of packaging, and identifies the functions it must address, ie, containment, protection, communication, and performance. It also illustrates that a package can be primary, secondary, tertiary, or quaternary in form and function. This view also indicates packaging extends beyond the confines of the "manufacturing" facility, and that a life-cycle approach toward the development of packaging is appropriate. The complexity of the systems view is influenced by the product itself and the particular industry classification. For instance, a consumer foods or

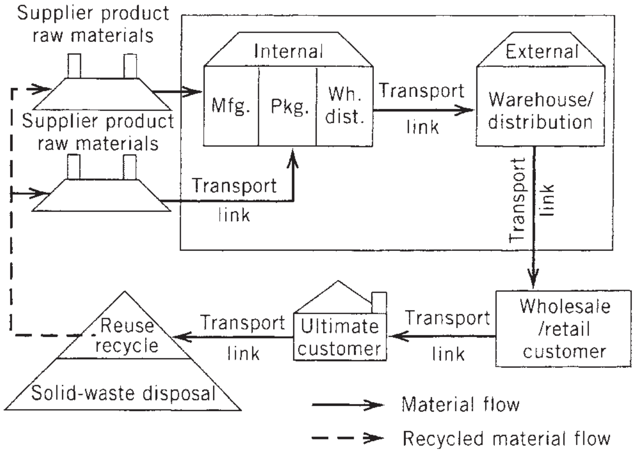

Figure 2. Materials handling in a system context.

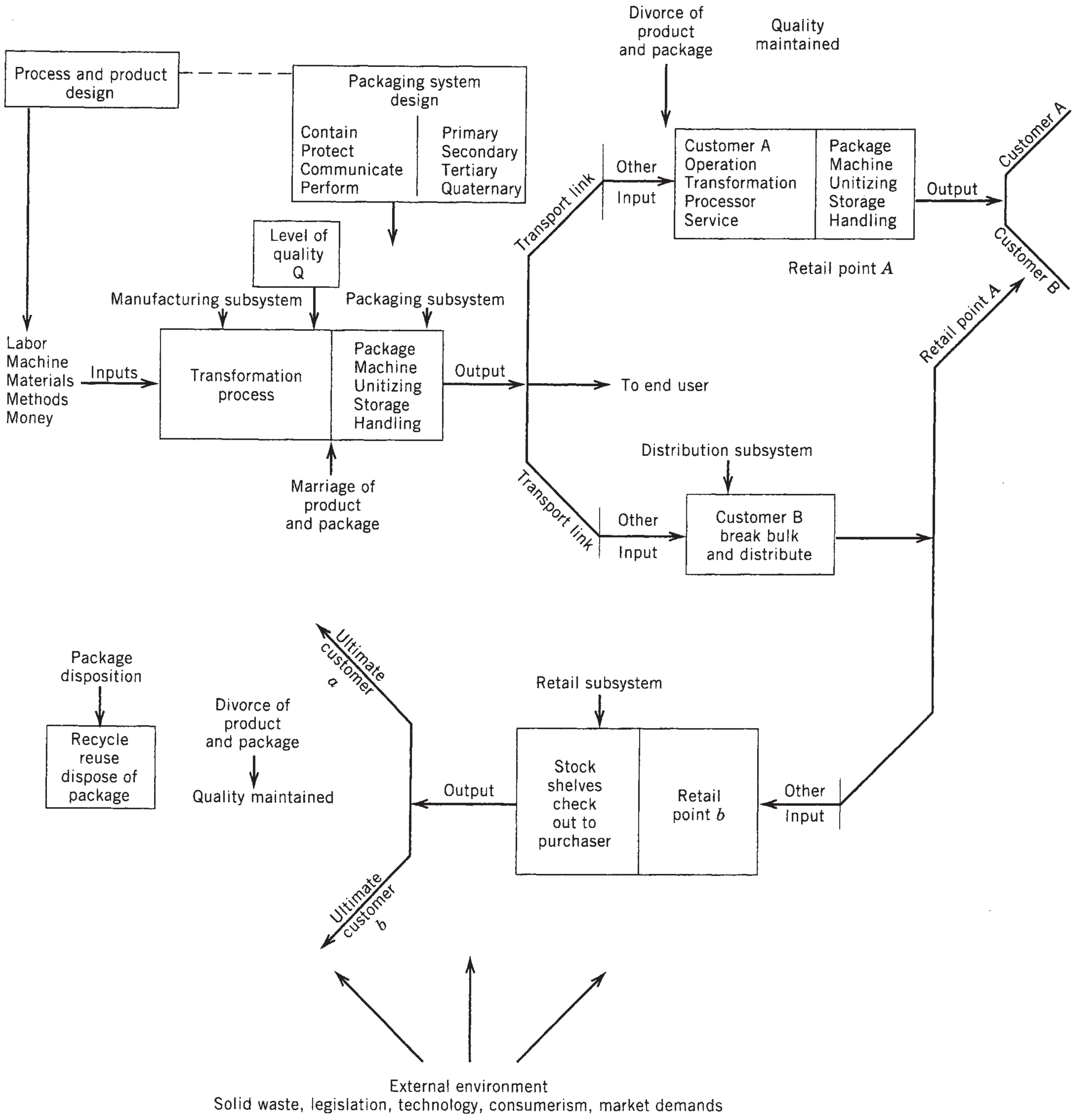

Figure 3. A systems representation of packaging.

pharmaceuticals company would have a complex system that may need to take into account product requirements, manufacturing requirements, distribution and warehousing requirements, marketing and consumer requirements, and solid-waste requirements relative to packaging development. The range of packaging material, processes, and equipment in this instance could be wide. However, the packaging for the manufacturer of a small electric motor for use in another product may be limited to corrugated boxes that are hand-packed and hand-palletized.

Figure 4 focuses more specifically on the point where the product, the package, and the package machinery meet and are united, influenced by human factors (labor and management policies). This view is relevant at the initial "marriage" between the product and the primary package as well as subsequent "marriages" when the

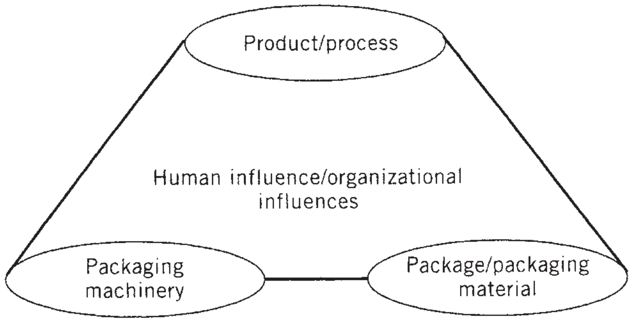

Figure 4. Marriage of product and package.

primary filled package (becomes product) is united to a secondary package, and so on. This view is typically confined to the "manufacturing packaging" facility, and it does not usually extend beyond those boundaries.

Although it is beyond the scope of this article to identify every packaging issue that influences materials-handling design, or vice versa, several examples may show that synergism does exist between material handling and packaging. In the systems view of both materials handling and packaging, the concept of the unit load—handle products in as large a unit load as possible (principle number 7)—is relevant to each. As previously mentioned, specialized software (10, 11) exists that can be used to optimize unit loading on a pallet, for single and mixed loads, or for optimized loading in the transport vehicle. Addressing this concept can help to meet objectives such as reducing materials-handling costs and packaging material costs, and also to increase productivity in manufacturing and distribution. In addressing the pallet, choices exist depending on many factors. Choices can be made between one-way pallets, or closed-loop pallets made from wood or plastic, one-way or closed-loop pallets made of recycled material, slipsheets, or no pallet at all. Those choices, in turn, impact the handling equipment such as forklift trucks, automated guided vehicles, and so on. Warehouse storage options such as rack storage or open-bay storage may also be of concern. Choices on how to maintain the optimized unit load may also exist. Current choices include stretch or shrink film, or spot gluing (15), strapping, and so on, which in turn influences equipment options. Using closed-loop pallet systems, pallets made from recycled material, or no pallet at all help to address material handling principle 12—ecology—which advocates using equipment and procedures that have no impact on the environment.

In the more restricted view of packaging shown in Figure 4, the packaging line is the primary issue of focus. Typically, the packaging line will consist of specific packaging machinery (filling, sealing, and labeling), handling equipment (conveying, accumulation, etc.), inspecting equipment, coding equipment, and so on, usually beginning at the depalletizer for empty containers and ending at the palletizer for filled and "packaged" products. The level of automation of the packaging line may be manual, semiautomatic, fully automatic, or a fully computer integrated operation.

The integration of the packaging line from a "macro" level through the proper use and selection of various materials-handling equipment can help to address objectives such as increasing productivity, increasing space and equipment use, and ensuring a high level of systems flexibility, reliability, availability, and maintainability, among others. For example, the choice of the appropriate conveying and accumulation equipment becomes extremely important depending on a range of factors specific to the package or packaging material, the speed of the packaging lines, how flexible the lines must be, and so on. For instance, handling requirements for empty lightweight plastic bottles are different from those for comparable heavier glass containers (16), thus potentially influencing productivity and other objectives (see the Conveyors, accumulation, palletizing, depalletizing article). Other examples may include the use of robotic palletizers (see the Palletizers article) increase the flexibility of the packaging line or the use of vertical versus horizontal accumulation to optimize space and overall facilities layout. Objectives can also be influenced at a "micro" level by proper design and selection of infeed mechanisms (star wheels and worm screw), transfer points (dead plate and power roll), right angle turns, and so on.

In short, there is much similarity between a systems view of materials handling and a systems view of packaging. In designing or evaluating packaging systems, issues relative to materials handling should be addressed. Correspondingly, when designing materials-handling systems, the requirements of the packaging system must be addressed as well. This is particularly true for industries such as consumer foods and products, pharmaceuticals, and beer and beverages. This is also true for the suppliers of packaging materials and equipment.

CONCLUSIONS

Materials handling is more than handling material. It is, in fact, a complex, multifaceted activity that extends beyond the boundaries of the "manufacturing" facility. This article has presented definitions, objectives, checklists, questions, and techniques that help to understand the complexities surrounding materials handling. Similarly, packaging is "more than just a box." This article briefly shows that packaging can also be viewed from a systems perspective and that synergies exist between material handling and packaging. This article mentioned only a few examples of the commonalties that exist between materials handling and packaging, but an entire article could be devoted to the topic. In conclusion, it is apparent that optimum design for both can depend in large part on understanding and analyzing each from a systems perspective.

BIBLIOGRAPHY

1. T. H. Allegri, Sr., *Materials Handling: Principles and Practice*, Van Nostrand Reinhold, New York, 1984.

2. L. F. Gelders and L. M. A. Pintelon, “Material Handling” in R. C. Dorf and A. Kusiak, eds., *Handbook of Design, Manufacturing and Automation*, Wiley, New York, 1994, Chapter 17.
3. D. R. Sule, *Manufacturing Facilities: Location, Planning and Design*, 2nd edition, PWS-Kent Publishing, Boston, MA 1994.
4. F. E. Meyers, *Plant Layout and Materials Handling*, Regents/Prentice-Hall, Englewood Cliffs, NJ, 1993.
5. J. A. Tompkins and J. A. White, *Facilities Planning*, Wiley, New York, 1984.
6. R. E. Sims, Jr., “Materials Handling Systems,” in G. Salvendy, ed., *Handbook of Industrial Engineering*, Wiley, New York, 1982, Chapter 10.3.
7. K. J. Musselman, “Simulations Spectrum of Power In Manufacturing” in *Proceedings, 1990 IIE Integrated Systems Conference & Society for Integrated Manufacturing Conference*, San Antonio, TX, Oct. 28–31, 1990, pp. 65–70.
8. W. S. Haider and S. Rajan, “Effective Analysis of Manufacturing Systems Using Appropriate Modeling and Simulation Tools” in *Proceedings, 1990 IIE Integrated Systems Conference & Society for Integrated Manufacturing Conference*, San Antonio, TX, Oct. 28–31, 1990, pp. 94–99.
9. A. M. Law and D. W. Kelton, *Simulation Modeling & Analysis*, 2nd edition, McGraw-Hill, New York, 1991.
10. CAPE—Computer-Assisted Packaging Evaluation, CAPE Systems Inc., Plano, TX 75074.
11. TOPS—Total Optimization Packaging Systems, TOPS Engineering Corporation, Plano, TX 75075.
12. R. Muther and K. Haganas, *Systematic Handling Analysis*, Management and Industrial Research Publications, Kansas City, MO, 1975.
13. W. J. Stevenson, *Production/Operations Management*, 4th edition, Irwin, Boston, MA 1993.
14. Cimtechnologies Corporation, *Factory CAD, Factory Plan & Factory Flow*, Release 3.0 Technical and Reference Manuals, Ames, IA, 1992.
15. “Palletizing System Brews up Savings for Miller,” *Packag. World*, 36 (Dec. 1994).
16. P. Reynolds, “Empty-Bottle Handling Is No Picnic,” *Packag. World* 42, 46 (Jan. 1995).

MEDICAL DEVICE PACKAGING

Laura Bix
Javier de la Fuente
School of Packaging,
Michigan State University,
East Lansing, Michigan

INTRODUCTION

Medical devices achieve their therapeutic ends via physical means, as opposed to metabolic, immunological, or pharmacological processes. The Global Harmonization Task Force (GHTF) has proposed the following harmonized definition of a medical device:

Any instrument, apparatus, implement, machine, appliance, implant in vitro reagent or calibrator, software, material, or other similar or related article:

a. Intended by the manufacturer to be used, alone or in combination, for human beings for one or more of the specific purpose(s) of:
    - Diagnosis, prevention, monitoring, treatment, or alleviation of disease.
    - Diagnosis, monitoring, treatment, alleviation of, or compensation for an injury.
    - Investigation, replacement, modification, or support of the anatomy or of a physiological process.
    - Supporting or sustaining life.
    - Control of contraception.
    - Disinfection of medical devices.
    - Providing information for medical or diagnostic purposes by means of in vitro examination of specimens derived from the human body, and
b. Which does not achieve its primary intended action in or on the human body by pharmacological, immunological, or metabolic means, but which may be assisted in its intended function by such means (1).

By definition, devices are involved in many different aspects of healthcare. As such, devices, their manufacturing processes, and the packaging that contains and protects them are extremely disparate. Complicated capital equipment, such as MRI tunnels and X-ray machines, are medical devices, but so are simple, commodity-like items such as tongue depressors and syringes. Some are meant for mass markets, others are niche items. Some are packaged individually; others are packaged in boxes of 100 s or 1000 s. Some are reprocessed, others are disposable, and some are used for a lifetime. Risks associated with device misuse and failures are equally varied, ranging from inconvenience to patient death (2).

It is estimated that the medical device and equipment market will be worth $246 billion by 2011, with a 4.6% annual growth until that time (3). This is largely driven by aging populations who frequently engage in active lifestyles, a growing middle class in emerging markets, and the spread of “Western diets” (4).

A hallmark of the device industry is innovation, which results in short life cycles for many products. “Medical devices undergo constant development based on feedback from medical practitioners and advances in other sciences relevant to medical device technology” (5). “With this constant innovation, the medical device industry spends heavily on research and development” (2); a large portion of revenues go to R&D streams.

CLASSIFICATION OF MEDICAL DEVICES

The great variation present in the medical device industry means that devices can be classified in a number of ways. Devices can be categorized by:

- The risk associated with improper use or a failure (generally high, moderate, and low).

- Conditions of processing (reusable, disposable, capital equipment, etc.).
- Conditions of the therapy (invasive, noninvasive).
- Conditions of shipping and handling (capital equipment, commodity surgical, etc.).

Because the goal of these therapies is to maximize efficacy and protect patient safety, the most common way to classify devices is based on risk. Although the specific classifications and regulatory requirements vary from country to country, the intent is the same; risk-based classifications provide guidance regarding the appropriate level of manufacturing control and regulatory oversight required to ensure safe and effective products.

GHTF Classification

GHTF, a voluntary group of representatives made up of regulators and industry, works to encourage convergence in the evolution of regulatory systems through the use of guidance documents that can be adopted globally. Because regulatory scrutiny frequently employs risk-based classifications, and classifications vary throughout the world, GHTF has tasked a group to catalyze harmonization of the classification system.

On July 27, 2006 Study Group 1 (SG1) published its recommendations for device classification entitled "Principles of Medical Devices Classification" (6). This document is one of a series that, together, describe a global regulatory model for medical devices; although, at the time of writing, classification and other regulatory controls were yet to be harmonized.

The GHTF classification system applies to all medical devices that are not used for the in vitro examination of specimens derived from the body, and it is based on risk. Risk is "a combination of the probability of occurrence of harm and the severity of that harm" (7). Device risk is a function of (a) the intended purpose of the device, (b) the effectiveness of risk management techniques applied during design, manufacturing, packaging and use, (c) the intended user, (d) mode of operation, and (e) the technology being employed (6). GHTF recommends a classification system based on four levels of risk (see Table 1), with the expected level of control increasing with increasing risk (see Figure 1). For detailed rules regarding how best to classify the devices, see "Principles of Medical Devices Classification GHTF/SG1."

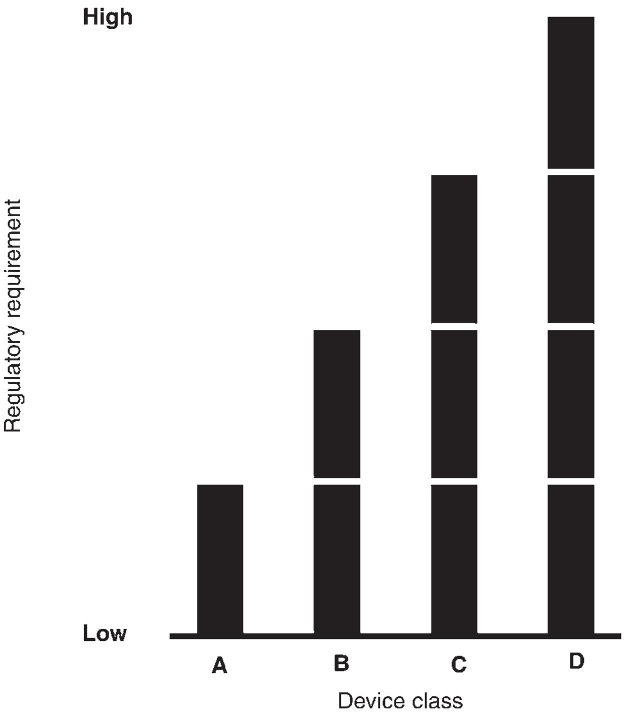

Figure 1. Relationship of regulatory control and GHTF classification. (*Source*: "Principles of Medical Devices Classification GHTF/SG1/N15".)

GENERAL CONSIDERATIONS FOR THE DEVELOPMENT OF MEDICAL DEVICE PACKAGING

Packaging Functions

As a general rule, packaging performs three broad functions—protection, utility, and communication—within three environments: the physical, ecospheric, and human (8). (See Packaging Design and Development for more detail.)

Protection. Protection refers to protection of the medical device from the environment and vice versa. For medical device packaging, product protection is necessary to maintain package integrity throughout its entire life, including: sterilization, shipping, storage, handling, and use. Typical issues include protection from shock and vibration, crushing, puncturing, tearing, bursting, splitting, pinholing, humidity, heat, and so on.

Table 1. General Classification System for Medical Devices Proposed by the Global Harmonization Task Group Study Group 1

Class	Risk Level	Device Examples
A	Low	Surgical retractors Tongue depressors
B	Low to moderate	Hypodermic needles Suction equipment
C	Moderate to high	Lung ventilators Bone fixation plates
D	High	Heart valves Implantable defibrillators

Source: Principles of Medical Devices Classification GHTF/SG1/N15.

The vital importance of maintenance of the sterile barrier system (SBS) is a distinctive characteristic of medical device packaging. Medical device packaging for disposables must not only maintain the SBS but, in many cases, also facilitate the sterilization of the device within. Such protective characteristics can be achieved through the package shape, particularly in thermoformed parts, in order to avoid product shifting or to keep kit components separated or nested.

For sealed packages, seal integrity is an important characteristic in product protection. Seals must be free of channels and must withstand the rigors of sterilization and transit.

Utility. Utility is related to the ease of use of the system. For many medical devices, quick and easy opening and removal of contents are crucial. While this consideration is also important for devices with relatively low risk, such as an adhesive bandage, it is extremely critical for sterile medical devices that are used in surgical arenas where the packaging must allow the device to be removed without contamination (aseptic presentation; see Figure 2). This particular need has led to the development of special materials and sealants that, when used in combination, can provide a package strengths that are adequate to endure the severity of processing and, at the same time, can be manually opened without imposing excessive stress on product or user.

Package design plays a key role in the opening function. For example, for tray lids, the seal area should transmit the peeling force smoothly around the package. The shape of the seal and design and location of the peel tabs affect the relative ease of opening. Preferably, peeling tabs are located on the corners of rectangular trays. Lids should extend slightly over seal areas to avoid edge tear when peeled. Most designs are based on the classic “Chevron seal” or “corner peel” designs. There are some cases where the package may serve other functions such as a measuring device, dispenser, stabilizing stand, disposal receptacle, and other suitable applications (9).

Communication. As with consumer goods packaging, secondary and primary medical device packages are a means to convey information through graphics, materials, and shape. Packaging communication operates at different levels, depending on the type of medical device. For over-the-counter (OTC) medical devices, such as condoms, glucose meters, adhesive bandages, thermometers, and so on, the communication role involves motivating a purchase, as well communicating important information for the safe and effective use of the medical device. Information may include directions, warnings, product benefits, brand differentiation, and so on. A very important aspect of package communication is product identification. This is especially true for devices that go into institutional settings, such as hospitals, where personnel may have to identify the correct device for a patient when seconds count.

Increasingly, the manufacturers of medical devices must provide crucial information in several languages. The crowded labels can make the legibility, visibility, and accuracy of the information, all of which are important, challenging to achieve. Package manufacturers not only face these challenges when it comes to labeling their products, but must also be sure that inks (as well as other components of the package like adhesives) do not interfere with the product’s efficacy or safety. In the event that components of the packaging migrate, it is important that these unintended additives are nontoxic and do not degrade or affect the intended performance of the device.

Package Forms, Materials, and Sealing

Selection of packaging style can impact package integrity. The type of package is largely driven by the characteristics of the device being packaged. These include size, shape, profile, irregularities, density, weight, and configuration (e.g., single unit or kit). For example, a high-profile, irregularly shaped device would be more securely packaged in a semirigid plastic tray than in a

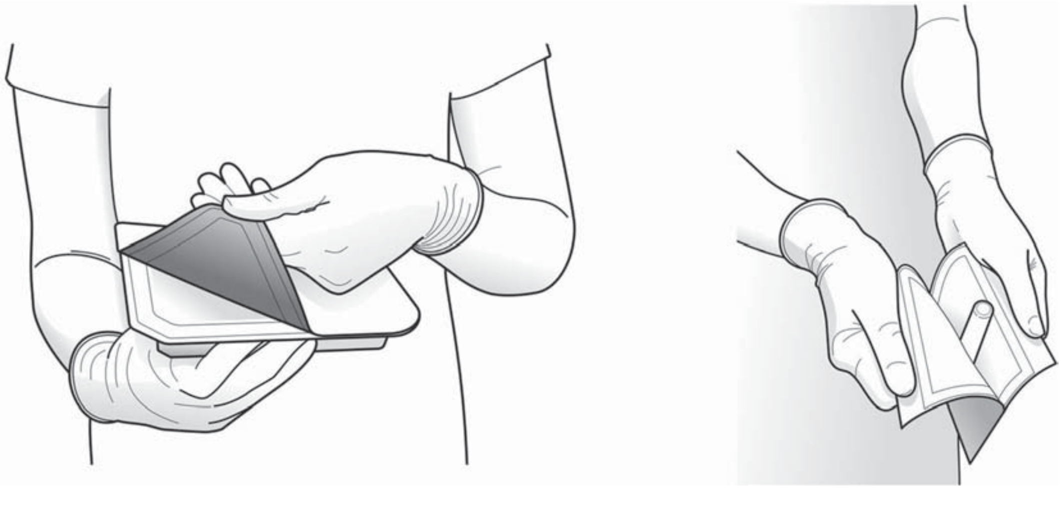

Figure 2. Aseptic presentation.

flexible pouch. As such, during the early design stages, it is critical to define the following parameters:

- Critical product characteristics.
- Type(s) of protection required (physical, ultraviolet light, O_2, water vapor transmission, etc).
- Type of sterilization process.
- Where and how the product is going to be dispensed (OTC, surgery, etc.).

Early packaging forms for medical devices included bags, cartons, and wraps; the primary material was paper. Glass and metal containers were used to a lesser extent. The coming of thermoformable materials in the 1950s and 1960s made tray and blister packaging possible, but the lack of good lidding materials limited their expansion. Boxes, cartons, and paper bags were not easy to use, inconvenient to dispense, and difficult to provide sterile delivery. The introduction of new thermoplastic polymers and peelable materials, along with improved film laminations, has led to the packaging forms most commonly used today (9). See Table 2 for a summary of materials and packages of the medical device industry.

Thermoformed Trays. Thermoformed trays are commonly used for surgical procedure kits and are ideal for high-profile, irregularly shaped devices. There are two types of thermoformed trays: semirigid and flexible. The most important difference is that semirigid trays are structurally self-supporting. They can provide good physical protection and are suitable for multicomponent applications. Formed flexible packaging is more suitable for low-cost devices and for simple tray configurations, but do not offer the same degree of structural protection as the semirigid trays.

The following characteristics are highly desirable for all formable materials:

- Ease of forming: The container should be free from mechanical stress to avoid sterilizer creep or seal fatigue.
- Heat resistance: The container should withstand heat sealing without deformation of seal flanges.
- Product compatibility: It is important that packaging components be nonreactive with the product.
- Sterilization compatibility: The packaging must withstand the rigors of sterilization and, in many

Table 2. The Relationship Between Materials, Packaging Forms, and Sterilization Methods

		Packaging form					Sterilization method			
	Material of the Sterile Barrier System (SBS)	Flat pouch	Vented bags	Header bags	Trays	Lids	Gas	Radiation	Steam	Autoclave
Flexible	Paper	●	●	●	○	●	●	●	●	○
	Tyvek®	●	●	●	○	●	●	●	●	○
	PET/PE (may be peelable)	●	○	●	○	●	⊙	●	○	○
	PET/PP	●	○	●	○	●	⊙	❖	⊙	●
	Nylon/Sealant	●	○	●	○	●	⊙	❖	❖	❖
	PET or Nylon/Aluminum foil/Sealant	●	○	●	○	●	⊙	●	○	❖
	Metallized PET/Sealant	●	○	○	○	○	⊙	●	○	○
	PE (various densities)	●	●	●	○	●	⊙	●	❖	❖
Rigid	PS	○	○	○	●	○	⊙	●	○	○
	PVC	○	○	○	●	○	⊙	○	○	○
	CPET or APET	○	○	○	●	○	⊙	●	⊙	●
	PETG	○	○	○	●	○	⊙	●	○	○
	PC	○	○	○	●	○	⊙	●	⊙	●
	XT polymer	○	○	○	●	○	⊙	●	○	○
	Polyacrylonitrile	○	○	○	●	○	⊙	●	○	○
	HDPE	○	○	○	●	○	⊙	●	❖	○
	PP	○	○	○	●	○	⊙	❖	○	●
	CTFE (Aclar®) laminations	○	○	○	●	○	⊙	●	○	❖●

● : Yes.
⊙ : Yes, if used with paper or Tyvek®.
❖ : Conditionally.
○ : No.

Source: Adapted from Berger and Dodrill.

cases, must facilitate as well as maintain sterility throughout distribution and handling.

- Sealant compatibility: Compatibility of the materials and their thermal transitions must be considered so that they can be efficiently processed.
- Ability to age: Designers must consider the materials and issues of mass transfer that may impact the ability of the system to maintain the SBS throughout the product's stated life.
- Cost-effective.

Typical materials for thermoformed trays are high-impact polystyrene (HIPS), polyvinyl chloride (PVC), XT polymer, acrylonitrile, polycarbonate (PC), and polyethylene terephthalate glycol (PETG). Lids can be manufactured from paper, Tyvek®, or a film, depending on the function, sterilization, and sealer characteristics (10).

Flexible Nonformed Pouches. This type of pouch is commonly used for single-use disposable items such as gloves, catheters, tubing, adhesive bandages, dressings, syringes, and so on. Flexible packages tend to provide less physical protection than the rigid ones (10) and are a preferred choice for high-volume, low-cost devices. It is a packaging form that provides: a sterile barrier, the ability to withstand sterilization, and, if properly designed, easy-opening features for dispensing. Varying peel pouches can be run on form-fill-seal machines.

Examples of flexible, nonformed pouches are flat pouches and gusset pouches. Flat pouches are bags made from two webs and sealed along the perimeter. The end seal is usually V-shaped or "chevron" for ease of opening. Material combinations include: adhesive coated paper to paper, paper (coated or uncoated) to film, Tyvek® (coated or uncoated) to film, coated Tyvek® to Tyvek®, and film (coated or uncoated) to film. Foil laminations are used if additional barrier properties are needed. Pouches with the right material combination can be sterilized by all commercial sterilization processes. Pouches manufactured with nonpermeable materials are limited to radiation sterilization or, under controlled-conditions, steam (10). Gusset pouches are similar to flat pouches except that one web is gusseted on the sides or the bottom to accommodate higher-profile products.

Bags and Vented Flexible Packaging. Bags are extensively used in the industry—in particular when low cost and high profile are required. Early bags were made of paper; some types of which are still being used today. Paper bags have the porosity needed for gas and steam sterilization. On the other hand, paper bags do not offer a particulate-free opening and they provide poor puncture resistance. Traditional paper bags have been replaced by pouches and trays. Plain polyethylene (PE) bags are used when clean, but not sterile, delivery is necessary. PE bags have good mechanical properties, but they are not porous enough to allow simple sterilization. PE has been shown to be permeable to ethylene oxide (ETO) sterilization with slow and closely controlled cycles. Vented bags have been developed to provide a clean, low-cost, high-profile, strong package and sterilizable container. Vented bags with single and double vents allow for ETO sterilization of large-sized kits.

Examples of bags and vented flexible packaging include paper bags, vented bags, and header bags. Paper bags are fabricated from a single sheet of surgical paper with adhesive zone when sealing is needed. They usually have a back seam and can be gusseted on the sides or bottom. They can be manufactured on form-fill-seal (FFS) packaging equipment. Vented bags are made from film; they have small windows with breathable patches made of paper or Tyvek®. The patch is needed for gaseous sterilization. Header bags are also plastic bags but instead of having a breathable patch, the top of the bag is designed with a peelable paper or Tyvek® strip running across the top. Header bags allow for aseptic presentation while vented bags do not (10).

Package Sealing. The sealing of medical device packaging is critical. Inappropriate sealing can negatively affect the package integrity. There are two types of seals: weld and peelable. Weld seals are achieved by heat or ultrasonics and produce a joint that is not designed to open. Peeable seals are achieved with heat and without heat (cold seals) and are designed to open. Peelable cold seals are accomplished by applying a cohesive material to both webs and then a uniform pressure contact. This seal type cannot be resealed; as a result, it provides a tamper-evident feature. Peelable heat seals are more complicated to achieve since they involve exact control over temperature, time, and pressure.

Sterilization Processes

Medical devices that will be in contact with blood or internal tissues, other than the gastrointestinal tract or other mucosa, and devices that deliver parenteral fluids or drug substances to the same tissues are expected to be sterile. Sterility is defined as having not more than one viable microorganism in a million sterilized products ($\text{SAL} = 10^{-6}$). A sterile device must keep its sterility until it is removed from the primary packaging for use on the patient (11). In the past, manufacturers of sterile medical devices frequently guaranteed the sterility of the product until the package was intentionally opened or accidentally damaged. This approach has changed in recent years. To maintain package integrity for such unlimited time poses a real challenge for any combination of materials, packaging forms, and seals. Recently, the European Union began requiring manufacturers to provide a shelf-life date and data that support the maintenance of the SBS throughout the stated timeframe.

Ethylene oxide (EtO) and radiation (gamma and electron beams) are the two dominant sterilization methods. As a rule of thumb, if product and packaging can withstand radiation, medical device manufacturers tend to use gamma radiation. If not, then EtO is the choice. Alternate methods such as heat (steam and dry) sterilization and several chemical and gas plasma methods represent a very small share of the market. However, these other methods offer efficiency, safety, and cost benefits which may make them attractive for particular segments of device sterilization.

Ethylene Oxide (EtO) Sterilization. EtO gas is an effective sterilant that causes cell death by denaturating of the proteins within it. The process does not cause discoloration and embrittlement of the packaging. However, it represents a major source of package stress and loss of seal integrity (seal fatigue or sterilizer creep). The higher stresses are induced by higher temperatures, pressures, and humidity during sterilization. In addition, the EtO residual level must be carefully monitored in order to prevent patient harm. The key criteria for packaging materials used in EtO sterilization are: porosity, hot adhesive strength, moisture and EtO tolerance, and broad product and chemical compatibility (9).

Radiation (Gamma and Electron Beam) Sterilization. Radiation is used to break up a microorganism's DNA molecules so that it cannot multiply. It is a fast and effective method for killing bacteria which leaves no toxic residue after the process is complete, eliminating many of the problems of EtO (heat, moisture, pressure, and chemicals). Since radiation processes do not require gas porous materials, all-plastic film packaging is suitable for this process. However, Tyvek® may be used in radiation applications because of its other high-performance characteristics, radiation resistance, and historic use. Material compatibility is an issue since gamma radiation may discolor or embrittle some polymers and some papers may yellow. When using gamma radiation, packagers need to focus on the effect of radiation on the package's properties, such as tensile strength, elastic modulus, impact strength, elongation, and color.

Heat Sterilization. Heat sterilization is one of the oldest techniques for killing bacteria. There are three types of heat sterilization methods. One involves the use of moist heat (high-pressure, saturated steam) as the sterilant; the second employs an autoclave to heat liquid already inside the package; and the third uses dry heat in an oven. The energy from the heat causes the coagulation of proteins in the cells, which, in turn, causes the microorganism's death. Steam under pressure is an effective sterilization method; the equipment needed is available in a wide range of sizes and prices, and there are no harmful byproducts from the process, although the whole cycle takes little time.

The major disadvantage is that it needs high temperatures that will deform plastics such as poly(vinyl chloride), polystyrene, polyethylene, and some synthetic fabrics. Fortunately, there are plastic materials that can tolerate varying levels of heat, these include nylon, polypropylene, oriented polyester, polycarbonate, and some grades of high-density polyethylene. Special precautions must be taken with Tyvek® since it is composed of HDPE fibers that melt at approximately 265°F. If sterilizer conditions are closely controlled between 250°F and 255°F, packages containing Tyvek® may be safely steam-sterilized.

The key criteria for packaging materials used in steam sterilization are (a) porosity (to allow the steam to pass through the package and contact the device), (b) seals and materials that can withstand high humidity at elevated temperatures, (c) bacterial barrier, (d) reactivity (so that product and package don't interact), and (e) the cost-effectiveness of proposed designs.

Packages that will sterilize devices via autoclave sterilization must contain water inside the sterile barrier system, have the barrier properties necessary to contain that water and provide a bacterial barrier, be nonreactive with the product, be able to withstand high humidity at elevated temperatures, and be cost-effective.

In a dry heat sterilization process, a package is subjected to controlled elevated temperatures (typically in excees of 300°F) for several hours. Silicone implants are sterilized using this technique.

Gas Plasma Sterilization. Low-temperature gas plasma (LTGP) provides an excellent alternative to EtO for sterilizing devices that are heat-sensitive and not radiation-stable. This is due, in large part, to its short sterilization cycles, negligible environmental impacts, and lack of aeration cycle (12). During this process "an aqueous hydrogen peroxide solution boils in a heated vaporizer and then flows as a vapor into a sterilization chamber containing a load of instruments at low pressure and low temperature" (13).

LEGISLATION, REGULATION, AND TEST STANDARDS

The systems surrounding the production of medical devices aim to maximize therapy safety and efficacy while minimizing cost. As a result, in most countries throughout the world, professionals in the device industry must demonstrate, with a high degree of confidence, that the products that they are producing are safe and effective. However, this must be done in an economy where cost-competitiveness is increasingly important and ballooning healthcare costs are creating concerns.

The question becomes, How do you ensure safety and efficacy and remain affordable? The solution generally involves using a scientific approach to design, production, and testing by using data to draw conclusions about the possibility of harm from a given device and/or lot. To do this, a variety of test standards are employed as the device and its packaging are developed.

Test Standards

The International Organization for Standardization (ISO). The International Organization for Standardization (ISO) has two standards regarding what type of information should be gathered to ensure the packaging of terminally sterilized medical devices performs as expected. The first, entitled “Packaging for Terminally Sterilized Medical Devices—Part I: Requirements for Materials, Sterile Barrier Systems, and Packaging,” “specifies the basic attributes required of materials and pre-formed systems intended for use in packaging systems for terminally sterilized medical devices while considering the wide range of potential materials, medical devices, packaging system designs and sterilization methods.” The second document, “Packaging for Terminally Sterilized Medical Devices—Part 2: Validation Requirements for Forming, Sealing, and Assembly Processes,” describes the validation process for forming, sealing, and assembly of the SBS. Validation refers to the need to systematically gather data through scientifically reliable means and interpret the data to determine that a process is capable of yielding the expected outcome.

Many organizations throughout the world have adopted the ISO standards (ISO11607 parts I and II). Among them are the Association for the Advancement of Medical Instrumentation (AAMI) and the American National Standards Institute (ANSI). AAMI went so far as to produce a Technical Information Report (TIR 22:2007) that provides guidance on implementing the ISO 11607 documents. Included in the TIR are the test methods typically used to indicate compliance with the requirements in the ISO standards (14). In general, the ISO documents indicate that:

- Package materials should be qualified.
- Packages should be tested.
- Processes should be validated.

These three things must be accomplished in order to ensure that the product is protected, the system is sterilized, and the sterility is maintained throughout distribution. (15) The “ISO strategy was to develop a single standard that addressed the required performance attributes of medical packaging without establishing specific performance criteria” (14). The material qualification, package testing, and process validation dictated by the ISO standards are all accomplished using data that are collected using relevant standards from a variety of organizations. See Table 3 for the types of tests that are conducted under these broad categories (15).

The use of standardized tests to qualify materials, test packages, and show evidence of controlled processes has several benefits. “Standardization of test methods allows laboratories to reduce the number of specific methodologies while retaining the overall capability. In addition, standardized test methods allow individual laboratories to assess their own capabilities against the stated intra laboratory variability” (14). The results provided from standardized tests should be comparable to those submitted by others, or obtained at different points in time.

The United States. Devices manufactured or sold in the United States are regulated by the U.S. Food and Drug Administration (FDA). Within the FDA, the Center for Devices and Radiological Health (CDRH) is responsible for drafting the specific requirements for the design, manufacturing, and packaging of medical devices. Among the key documents containing legislation and regulation of medical devices are:

- The Federal, Food, Drug, and Cosmetic Act of 1938
- The Medical Device Amendments of 1976
- The Design Control Guidance for Medical Device Manufacturers

Table 3. ISO Mandates. Types of tests conducted for material qualification, package testing, and process validation

Categories	Tests	
Material qualification	Microbial barrier Toxicity/biocompatibility/particulates Physical and chemical properties, as dictated by product requirements (extractables, retained solvents, etc.) Barrier properties Compatibility with the sterilization process Compatibility with the forming and sealing process Visibility and appearance Requirements for shelf life	
Package testing	Package performance	Distribution, handling, and storage Integrity (microbial and physical) Strength (burst, tensile, etc.)
Validation	Installation	Installed correctly? Operating as expected after installation?
	Operational	What are the process control limits? What are the actionable levels necessary in order to produce product meeting predetermined requirements?
	Performance	Does the product, when produced under the expected conditions of production, consistently meet the predetermined requirements?

Source: Adapted from Miller (15).

- The Quality Systems Regulations (QSR), which are located in 21CFR Part 820

The QSR document dictates the documented use of a quality system and the verification and/or validation of the system's ability to produce expected results. Documentation to meet these objectives heavily relies on data collected through standardized test methods. Test standards commonly used in the United States come from a variety of organizations. These include: ASTM International, the United States Pharmacopeial Convention (USP), the Technical Association of the Paper and Pulp Industry (TAPPI), and the International Safe Transit Association (ISTA). Standards that are frequently used to develop, test, and monitor SBS are indicated in Table 4.

The European Union (EU). In the European Union (EU), devices are regulated through a series of measures that are part of the "New Approach Directives." Directives relating to medical devices include: the Medical Devices Directive (MDD), the Active Implantable Medical Devices Directive (AIMD), and the In vitro Diagnostics Directive (IVDD). Compliance with the European Directives is signified through the use of a CE marking and declaration of conformity.

The EU authorized the Committee for European Normalization (CEN) to establish standards for compliance with European Directives. Previously, this was EN 868-1, "Packaging Materials and Systems for Medical Devices which Are to Be Sterilized—Part 1: General Requirements and Test Methods," this has since been replaced by the two ISO standards previously discussed. A series of vertical standards provide specific performance requirements and test methods for materials typically used in the packaging of medical devices (see Table 5).

CHALLENGES FACING THE MEDICAL DEVICE INDUSTRY

As indicated previously, the device industry invests heavily in R&D and has historically been characterized by innovation. That said, "traditional innovation is no longer sufficient to win in this competitive game" (4). The aging of the population, escalating healthcare costs, rising expectations, problems within the supply chain, and fierce competition have created a climate where the designers of medical devices and their packaging face a host of pressures and considerations as they make design choices.

The Aging of the Population

It is estimated that by the year 2050, over 5% of the U.S. population will be over the age of 85. The aging trend is not limited to the United States, but is a global phenomenon that warrants the consideration of those that design packaging for all types of products (see Figure 3).

Not only do aging consumers use medical products at a higher per capita rate than the general population, they are at risk from inappropriate product use for a variety of reasons. They are likely to have various chronic disorders that create the need to engage in multiple, complex therapies on a daily basis. Further complicating things is the fact that older consumers are also more likely to be experiencing mental, physical, and perceptual declines (see Figure 4).

This has prompted people like Patricia P. Barry, MD, MPH, and Executive Director at the Merck Institute of Aging, to issue a call to industry to begin thinking differently. In *The State of Aging and Health in America* (16), Barry indicated:

> "The demographic tidal wave is coming. Aging in the 21st century, however, is more than just a matter of numbers. The average 75-year-old has three chronic conditions and uses five prescription drugs. Older consumers have different challenges and medical needs than younger adults. Consequently, it is not enough to be aware of the demographic imperative; we must also be prepared for it" (16).

These trends have obvious ramifications for the designers of devices that are sold over the counter; however, this changing demographic also has impact for those that are sold for institutional use; increasing life spans will tax healthcare as we know it. As such, designs that catalyze system-wide efficiencies will become paramount.

Medication Errors and Patient Noncompliance

It is well documented, both in human and financial terms, that medical errors are a major problem in healthcare facilities throughout the world (17–19). At the turn of the 20th century, the Institute of Medicine (IOM) published "To err is human," reporting that in between 44,000–98,000 people in America die each year as the result of medication errors. "Even when using the lower estimate, deaths due to medical errors exceed the number attributable to the 8th leading cause of death. More people die in a given year as a result of medical errors than from motor vehicle accidents (43,458), breast cancer (42,297), or AIDS (16,516)" (20).

This comes at a significant cost; estimates for U.S. figures include the expense of additional care that is necessitated by the errors, as well as lost income and household productivity from resultant disability. These have been estimated at US$ 17–29 billion annually. Estimates for the cost of an adverse drug event (ADE) for each patient range from US$ 2000–5000 (21).

These problems are certainly not limited to the United States. Estimates from the United Kingdom indicate that "about 10% of inpatient episodes result in errors of some kind, about half [of which] are preventable" (17). A study published by Vincent et al. suggested that of the approximately 8 million hospital admissions that occur in England each year, about 850,000 result in a patient safety incident, costing the National Health Service (NHS) approximately £2 billion in extra hospital days (17, 22).

Issues of package and label design have been implicated as a significant part of the problem. The 2000 IOM report, which made numerous recommendations for improving the American healthcare system, stated that "drugs may be prone to error in use due to sound-alike or look-alike names, unclear labeling or poorly designed

Table 4. Standards and tests used to develop, test, and monitor sterile barrier systems in the United States

Categories		Standards/Tests
General		ASTM International F2097: Standard guide for design and evaluation of primary flexible packaging for medical products
		ASTM F99: Standard guide for writing a specification for flexible barrier materials
		ASTM F2559: Standard guide for writing a specification for sterilizable peel pouches
Material qualification	Microbial barrier	ASTM F 1608: Standard test method for microbial ranking of porous packaging materials (exposure chamber method)
		ASTM F2638: Standard test method for using aerosol filtration for measuring the performance of porous packaging materials as a surrogate microbial barrier.
	Biocompatibility	ISO 10993, Part 1: Biological evaluation of medical devices: evaluation and testing
		ASTM F2475: Standard guide for biocompatibility evaluation of medical device packaging materials
		USP <87> Biological reactivity testing, in vitro
		USP <88> Biological reactivity testing, in vitro
		USP <1031> Biocompatibility of materials used in drug containers, medical device, and implants
	Particulates	ASTM D 2019: Standard test method for dirt in paper and paperboard
		TAPPI T-437: Dirt in paper and paperboard (TAPPI dirt chart)
		AAMI TIR DP 01 Ed. 1 Particulates associated with vascular medical devices (in progress)
		ASTM D726: Standard test method for resistance of nonporous paper to passage of air (Guriey test for low porosity)
	Barrier (porous)	TAPPI T 536: Resistance of paper to the passage of air (HP method) (Gurley test method for medium porous materials)
		TAPPI T460: Air resistance of paper (Gurley test method for highly porous materials)
	Barrier (Nonporous)	ASTM F 2097: Standard guide for design and evaluation of primary flexible packaging for medical products (complete listing of test methods at ASTM)
	Durability	ASTM F 2097: Standard guide for design and evaluation of primary for medical products contains numbers for tests that can be used to characterize puncture and tear resistance, thickness, tensile, flexural durability, basis weight, bond strength, and aging
	Processing	ASTM D1894: Standard test method for static and kinetic coefficients of friction of plastic film and sheeting
		ASTM F 2029: Standard practices for making heat seals for determination of heat sealability of flexible webs measured by seal strength
		ASTM F 2217: Standard practice for coating/adhesive weight determination
	Visibility and appearance	ASTM D1003: Haze ASTM D 2457: Gloss ASTM D 589: Opacity
		ASTM D 5264: Standard test method for abrasion resistance of printed materials by the Sutherland rub tester
		ASTM F 2250: Standard practice for the evaluation of chemical resistance of printed inks and coatings on flexible packaging materials
		ASTM F 2252: Standard practice for evaluating ink or coating adhesion to flexible packaging materials using tape
Package testing	Integrity	ASTM F1886: Standard Test Method for Determining Integrity of Seals for Medical Packaging by Visual Inspection
		ASTM F1929: Standard Test Method for Detecting Seal Leaks in Porous Medical Packaging by Dye Penetration
		ASTM F 2391-05: Standard test method of measuring package and seal integrity using helium as the tracer gas
		ASTM F2338: Standard test method for nondestructive detection of leaks in packages by vacuum decay method

(*Continued*)

Table 4. Continued

Categories	Standards/Tests
Strength	ASTM F 2228: Standard test method for non destructive detection of leaks in medical packaging which incorporates porous barrier material by CO_2 tracer gas method
	ASTM F 2227: Standard test method for non destructive detection of leaks in non-sealed and empty medical packaging trays by CO_2 tracer gas method
	ASTM F 2096: Standard test method for detecting gross leaks in porous medical packaging by internal pressurization (bubble test)
	ASTM F 2029: Standard practices for making heat seals for determination of heat sealability of flexible webs measured by seal strength
	ASTM F 88: Standard test method for seal strength of flexible barrier materials
	ASTM F 2054: Standard test method for burst testing of flexible package seals using internal air pressurization within restraining plates

Source: Adapted from Miller (15) and Larsen (36).

packaging” (18). This was reiterated in the 2006 IOM report, which indicated “drug information is communicated through labeling and packaging, marketing practices and advertisements. Poorly designed materials and inadequate representation of risks and benefits to providers and consumers have led to many errors” (19). Other organizations have echoed these sentiments. A study conducted by the United States Pharmacopeia indicates, “USP investigators calculated that confusing labeling or packaging of drug products contributed to more than half of the incidents [of error]” (23).

Although there are systems in place for the voluntary and mandatory reporting of adverse incidents associated with medical devices, “they are limited by underreporting

Table 5. Vertical European Standards for Medical Packaging EN 868 Series

Standard	Title
EN 868-2: 1999 (Sterile wrap)	Packaging materials and systems for medical devices which are to be sterilized, Part 2: Sterilization wrap—Requirements and test methods
EN 868-3:1999 (Paper for bags and pouches)	Packaging materials and systems for medical devices which are to be sterilized, Part 3: Paper for use in the manufacture of paper bags (specified in EN 868-4) and in the manufacture of pouches and reels (specified in EN 868-5)—Requirements and test methods
EN 868-4:1999 (Paper bags)	Packaging materials and systems for medical devices which are to be sterilized, Part 4: Paper bags—Requirements and test methods
EN 868-5:1999 AC:2001 (Pouches)	Packaging materials and systems for medical devices which are to be sterilized, Part 5: Heat and self-sealable pouches and reels of paper and plastic film construction—Requirements and test methods
EN 868-6:1999 (Paper for packs)	Packaging materials and systems for medical devices which are to be sterilized, Part 6: Paper for the manufacture of packs for medical use for sterilization by ethylene oxide or irradiation—Requirements and test methods
EN 868-7:1999 (Adhesive coated paper)	Packaging materials and systems for medical devices which are to be sterilized, Part 7: Adhesive coated paper for the manufacture of heat sealable packs for medical use for sterilization by ethylene oxide or irradiation—Requirements and test methods
EN 868-8:1999 (Reusable sterilization containers for steam sterilizers)	Packaging materials and systems for medical devices which are to be sterilized, Part 8: Reusable sterilization containers for steam sterilizers conforming to EN 285—Requirements and test methods
EN 868-9:2000 (Uncoated non-woven polyolefin materials, e.g., Tyvek)	Packaging materials and systems for medical devices which are to be sterilized, Part 9: Uncoated nonwoven materials of poiyolefines for use in the manufacture of heat sealable pouches, reels and lids—equirements and test methods
EN 868-10:2000 (Adhesive coated non-woven polyolefin materials, e.g., Tyvek)	Packaging materials and systems for medical devices which are to be sterilized, Part 10: Adhesive coated nonwoven materials of polyolefines for use in the manufacture of heat sealable pouches, reels and lids—Requirements and test methods

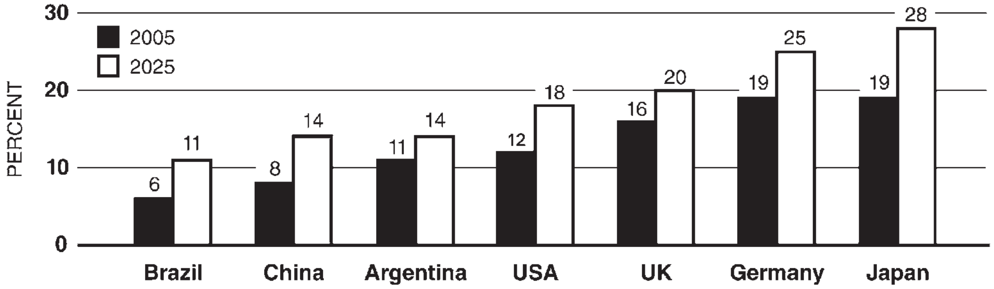

Figure 3. Global aging. Percentage of people age 65 and over in selected countries for 2005 and projected 2025. [*Source*: U.S. Census Bureau (37).]

and the absence of denominator data" (24). The diverse array of devices, environments of use, and risks associated with failures challenge the implementation of comprehensive surveillance plans. The information that is available suggests that adverse medical device events (AMDEs) are an important patient safety issue that are presently underreported; strategies for prevention and detection need to be implemented, and it is likely that packaging will play a role in these efforts.

Rising Nosocomial Infection Rates

The emergence of microbes that are resistant to cheap and effective, first-choice (or "first-line") drugs presents one of the most serious problems facing global healthcare. Bacterial infections that show the most evidence of resistant microbes include: diarrheal diseases, respiratory tract infections, meningitis, sexually transmitted infections, and hospital acquired infections. Implicated microbes include: penicillin-resistant *Streptococcus pneumonia*, vancomycin-resistant enterococci, methicillin-resistant *Staphylococcus aureus*, multi-resistant salmonellae, and multi-resistant *Mycobacterium tuberculosis* (25).

Treatment failures lead to the requirement for second-line therapies that can be more than 100 times expensive than first-line therapies. In countries where treatment becomes cost prohibitive, the consequence is not only the suffering and the potential death of the patient, but also possible spread of the drug-resistant disease. "Most alarming of all are diseases where resistance is developing for virtually all currently available drugs, thus raising the spectre of a post-antibiotic era…current trends suggest that some diseases will have no effective therapies within the next ten years" (25).

Additionally, several concurrent trends conspire to aid in the spread of infections. These include:

- The frequent need for hospital intervention of the aging population.
- Increases in urbanization and overcrowding.
- A resurgence in certain diseases (e.g., tuberculosis and malaria).
- Tremendous increases in global trade and travel.
- The AIDS epidemic, which gives rise to large numbers of immunocompromised patients that are susceptible to disease.
- Changes in the environment, which include pollution, environmental degradation, and changing wind patterns. These impact both the incidence and distribution of disease across the globe (25).

Although device packagers have long understood the need to maintain a sterile barrier throughout distribution, at no time in history has sterile presentation of packaged devices been more important. Designers must consider how the design will assist the sterilization process (e.g., pore size on sterilization efficacy), maintain the SBS throughout distribution and handling, and facilitate aseptic presentation of package contents to the sterile field.

As if the previously described challenges were not enough to consider, issues associated with the supply chain also create difficulties that should be considered by designers.

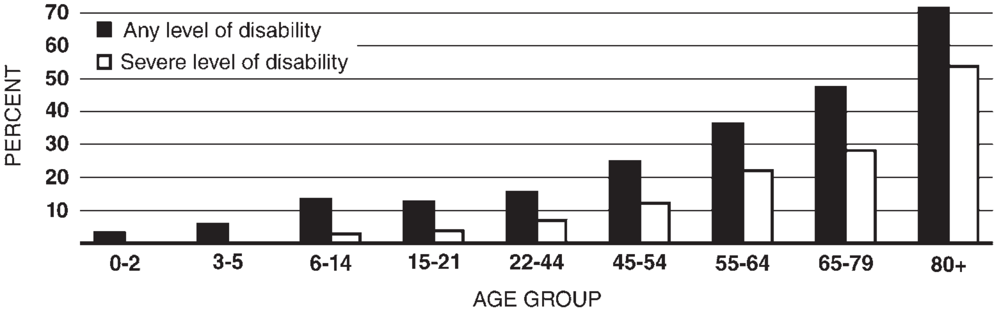

Figure 4. Disability prevalence by age. Percent with specified level of disability. [*Source*: U.S. Census Bureau (37).]

Illicit Activities within the Supply Chain

Devices can be grouped into two broad categories with regard to the supply chain: advanced devices and commodity-type medical surgical supplies. Advanced devices are higher-priced, lower-volume, technologically sophisticated diagnostic and therapeutic products. They are sold mostly to hospitals, but to different customers within the hospital supply chain: buying groups, distributors, and providers. The manufacturers of commodity-type medical surgical supplies have a more complicated supply chain; products are frequently sold through a series of distributors, a multi-echelon global supply chain that, at present, lacks transparency.

Even within the hospital, tracking therapies can be difficult. Complications of managing hospital inventories include the fact that items to be tracked are varied. As discussed previously, products are large and small, durable and expendable, disposable and reprocessed, numerous and few, and critical and noncritical to care. As such, the relevant information varies from item to item. Furthermore, a "hospital's size, geographic location, diversification, and various specializations all affect the nature of its business and, hence, the requirements of its supply chain. Likewise, each ward within a hospital is unique. The number of products and demand of those products, for example, varies greatly from an Emergency Room to a Cardiac Cath Lab to an Intensive Care Unit" (26).

As such, tracing devices back to their components can be difficult in the current system. Compounding this problem is the issue of arbitrage (both legal and illegal). The healthcare industry, by its very nature, must balance the tensions of innovation and access. The industry must provide access to therapies for all people, but if it is to continue to innovate, the costs associated with research and development must also be recouped so that they can be invested to develop future generations of lifesaving products. The way that the industry generally deals with the tension of access versus innovation is differential pricing, selling at what the market will bear. For example, OECD nations,* which can afford to pay more, generally bear the majority of the cost for future innovations; areas of the world that cannot afford this burden are sold therapies at much lower prices. Markets can be segmented along geographic borders, political borders, or buyer and payer classes within countries (such as U.S. Medicare, Medicaid, Veterans' Affairs, Federal employees, or private health plans).

However, one of the unfortunate side effects of differential pricing is that it makes the illegal arbitrage of healthcare products possible. Economic arbitrage is the opportunity to buy an asset at a low price and then immediately sell it in another market for a higher price (27). In instances where arbitrage involves intellectual property and the product crosses an international border, it is called parallel trade. Parallel trade involves "the act of taking goods placed into circulation in one market, where they are protected by a trademark, patent or copyright, and shipping them to a second market without the authorization of the local owner of the intellectual property right" (28). Parallel trade may or may not be legal, depending on the country's intellectual property laws. Additionally, the practice may be forbidden contractually, though this approach can run afoul of competition laws (27).

The problem of this global system of multiple hand-offs, arbitrage, and opacity is that it presents opportunity for those with illicit intentions. Criminals can participate in the supply chain of surgical supplies in a variety of ways. Tactics include:

- Buying medical supplies from "closed door" pharmacies and dispensaries of small institutions such as nursing homes, hospices, and AIDS clinics at discounted prices.
- Paying hospital or nursing home workers for devices from their supplies.
- Offering cash to Medicaid patients in exchange for their care items.
- Collaborating with corrupt company employees to break into warehouses, or steal shipments from loading docks.
- Stealing or purchasing devices that are intended for charitable or low-income markets in order to divert products to markets that will pay higher prices.

For those that are not willing to go to the effort that illegal arbitrage takes, there is counterfeiting. "Counterfeiting dispenses with the need to collect the product in far-flung locations, repackage it, and transporting [sic] it back to the OECD markets. Counterfeiting can be produced in market at very modest cost, more cheaply than obtaining diversions in low-income countries" (27). Counterfeiting of medical products (drug, device, and biologic) is attractive to those with illicit intentions for a variety of reasons, including:

- Lax penalties associated with the crime.
- The rise of technology which allows for easy production of many medical products.
- Cottage industries that use unemployed, skilled labor.
- The rise of internet sites where goods can be advertised and sold.
- An increase in the self-prescribing culture.
- Great potential for profit (in part due to differential pricing, in part due to the cost of genuine therapies).
- The nature of the industry; sick, and sometimes desperate, people are open to exploitation.
- The globalization of the healthcare industry and free trade, making the distribution of products easier.

Although the counterfeiting of drug products is more widely investigated and reported, the number of counterfeit medical devices is believed to have grown in recent years and the potential ramifications are serious (29). Both finished goods and device components have been successfully faked. Glucose meters and test strips,

---

* Countries that are members of the Organisation for Economic Co-operation and Development.

condoms, contact lenses, blood pressure meters, blood bags, surgical mesh, stethoscopes, sphygmomanometers, the components of X-ray machines, and even intra-aortic pumps, to name a few, have been counterfeit in recent years (30, 31).

As mentioned previously, manufacturers and even regulators are looking to packaging as a component of the solution to the problems associated with diversion and counterfeiting.

Escalating Healthcare Costs

The previously discussed issues (aging populations throughout the world, medication errors and patient noncompliance, rising rates of infection, and devices delivered by a supply chain that moves differentially priced therapies in a world of arbitrage and counterfeits) have obvious impacts. These issues, coupled with an ever-increasing reliance on technologies that provide human sustenance and comfort (i.e., complicated devices), are driving healthcare costs up the world over (32). "Health care costs are rising worldwide at rates that alarm governments, business and individuals"… and have grown as a percentage of GDP in most countries (33). This is happening in a world where cost-competitiveness is increasingly important and a reduction of ballooning healthcare costs is recognized as a priority.

In turn, governments, providers, purchasing organizations, insurers, and patients are demanding better outcomes for the dollars that they spend. Varying players within the medical products' supply chain are calling for evidence-based medicine and comparative evidence upon which decisions can be made. They desire the ability to link specific devices to patient outcomes in order to maximize the impact of the healthcare dollar. Packaging has the potential of playing a role in these efforts, because it contains identifying marking of contents that can be fed into patient records (and bills).

POTENTIAL SOLUTIONS

Automatic Identification

The use of automatic identification technologies (auto ID) to carry and communicate standardized information about medical devices is one approach that is being used to system efficiencies and reduce cost. "Auto ID is the broad term given to a host of technologies that are used to help machines identify objects or persons" (34) and includes bar codes, radio-frequency identification (RFID), and biometrics.

Proponents of implementing Auto ID in a standardized fashion for the medical device industry indicate the following benefits:

- Reductions in medication errors
- Facilitation of notification and recalls
- Identification of device incompatibilities
- Identification of potential adverse effects (such as allergic reactions)
- Deterrence of counterfeits
- Assistance in product authentication
- Data for evidence-based medicine
- Evidence for prosecution in the case of illicit activities (counterfeiting)
- Integration of product with electronic health records (EHR) and Computerized Physician Order Entry (CPOE) systems
- Improved inventory control
- Improved billing and reimbursement
- Improved post market surveillance (2).

The Rise of Combination Products

With increasing frequency, these challenges are being met using (a) designs that are a convergence of devices, (b) pharmaceutical and biologic products, or (c) customized kits, and combination products. Combination products are one way that device manufacturers can add value to medical products. The market size of all combination products in 2004 was estimated to be $6 billion and has been projected to grow to $10 billion by 2009 (35). This growth is largely due to the added convenience that these products provide.

Products like insulin injector pens, metered dose inhalers, transdermal patches, and prefilled syringes are combination products that add convenience, saving end-users time and effort. In these examples, two types of therapy (a drug and a device) are combined into a single product, and the device itself becomes a package for the drug product. Customized kits, in which multiple products are packaged into a single package, usually for a procedure, are another example of combination products. Regardless of whether the therapies are combined into a single product, or multiple products packaged together, things like shelf life, efficacy, package testing, product labeling, and regulation become more complicated. As such, people that design packaging for combination products must consider not only the physical environment (shocks, vibrations, and other aspects of dynamics), which can threaten the integrity of the sterile barrier, but also the ecospheric environment, which can render the drugs that have been added unefficaciously.

CONCLUSIONS

Because of the disparate array of medical devices, thoroughly covering the packaging of medical devices in a single book chapter is all but impossible. This article is meant to serve as a guide to other resources for the packagers of medical devices and also provide things to consider during the design process (present and future).

Acknowledgments: The authors gratefully acknowledge the advice, insights, and technical expertise of Dhuanne Dodrill. Dhuanne was immensely helpful in providing writing much of the technical information regarding materials, packages, and sterilization processes.

BIBLIOGRAPHY

1. GHTF Study Group 1, “Information document concerning the definition of the term ‘Medical Device,” 2005. “Available at http://www.ghtf.org/sg1/sg1-final.html (accessed July 1, 2008).
2. Eastern Research Group, “Unique identification for Medical Devices,” 2006, Food and Drug Administration. Available at http://www.fda.gov/cdrh/ocd/udi/erg-report.pdf (accessed April 4, 2008).
3. Research and Markets, “Medical Market Futures to 2011,” 2007.
4. Capgemini, Medical Devices Industry: Growth Opportunities and Cost Pressure” in *The 3rd Annual World Health Care Congress: Europe 2007*, Barcelona, Spain, 2007. Available at http://www.worldcongress.com/events/NW715/pdf/thoughtLeadership/8-LS_MeddeviceIndustry.pdf (accessed July 12, 2008).
5. US “Medical Device Industry Grows Rapidly”, *J. Clin. Eng.*, 128, 2006.
6. GHTF Study Group 1, “Principles of Medical Devices Classification,” 2006. Available at http://www.ghtf.org/sg1/sg1-final.html (accessed July 1, 2008).
7. ISO/IEC Guide 51:1999, “Safety Aspects. Guidelines for Their Inclusion in Standards,” International Organization for Standardization, 1999.
8. H. E. Lockhart, “A Paradigm for Packaging,” *Packaging Technol. Sci.*, **10**, 237–252, 1997.
9. C. D. Marotta, “Packaging Materials,” in M. Sherman, ed., *Medical Device Packaging Handbook*, Marcel Dekker, New York, 1998.
10. D. S. Barcan and H. F. Miller, “Package Validation” in M. Sherman, ed., *Medical Device Packaging Handbook*, Marcel Dekker, New York, 1998.
11. C. W. Bruch and R. R. Reich, “Package Sterilization Methods” in M. Sherman, ed., *Medical Device Packaging Handbook*, Marcel Dekker, New York, 1998.
12. L. A. Feldman and H. K. Hui, “Compatibility of Medical Devices and Materials with Low-temperature Hydrogen Peroxide Gas Plasma”, *Med. Device Diagn. Ind. Mag.*, 57–70, 1997.
13. B. M. Fryer and J. P. Kohler, “Parametric Release for Low-Temperature Gas Plasma Sterilization”, *Med. Device Diagn. Ind. Mag.*, 38–39, 2005.
14. M. Scholla, “Medical Packaging: Achieving a Single Global Standard” in *Medical Device and Diagnostics Industry*, January 2004. Available at http://www.devicelink.com/mddi/archive/04/01/007.html (accessed July 3, 2008).
15. H. Miller, Sterile Medical Device Packaging Regulations. 2006. Guest lecture for the Medical Packaging course at Michigan State University.
16. Centers for Disease Control and Prevention and Merck Institute of Aging and Health, “The State of Aging and Health in America,” 2004. Available at http://www.cdc.gov/Aging/pdf/State_of_Aging_and_Health_in_America_2004.pdf (accessed June 11, 2008).
17. Department of Health, “Coding for Success: Simple Technology for Safer Patient Safety,” 2007, London, UK. Available at http://www.patientsafetyboard.org/DesktopModules/Documents/DocumentsView.aspx?tabID = 0&ItemID = 31895&MId = 5204&wversion = Staging (accessed July 13, 2008).
18. Institute of Medicine, *To Err is Human: Building a Safer Health System*. The National Academies Press, Washington, DC, 2000.
19. Institute of Medicine, *Preventing Medication Errors* (prepublication copy), The National Academies Press, Washington, DC, 2006.
20. Healthcare Distribution Management Association, *Medication Errors and Patient Safety: The Barcode Connection*, Reston, VA, 2004.
21. C. Vincent, G. Neale, and M. Woloshynowych, “*Adverse Events in British Hospitals: Preliminary Retrospective Record Review*,” *Br. Med. J.* **322**, 517–519, 2001.
22. D. G. M. Vidt, “How Physicians Can Prevent Medication Errors: Practical Strategies,” *Cleveland Clini. J. Med.* **64**(7), 355–359, 1997.
23. M. Samore, R. Evans, A. Lassen, P. Gould, J. Lloyd, R. M. Gardner, R. Abouzelof, C. Taylor, D. A. Woodbury, M. Wily, and R. A. Bright, “Surveillance of Medical Device-Related Hazards and Adverse Events in Hospitalized Patients,” *J. Am. Med. Assoc.* **291**(3), 325–334, 2004.
24. World Health Organization, “Antimicrobial Resistance,” 2002. Available at http://www.who.int/mediacentre/factsheets/fs194/en/ (accessed June 17, 2008).
25. D. DeScioli, “Differentiating the Hospital Supply Chain for Enhanced Performance,” Master’s degree in Logistics, Massachusetts Institute of Technology, Cambridge, MA, 2005.
26. K. Outterson, “Pharmaceutical Arbitrage: Balancing Access and Innovation in International Prescription Drug Markets,” *Yale J. Health Policy, Law, and Ethics*, **5**(1), 193–291, 2005.
27. M. Gansladt and K. Maskus, “Parallel Imports and the Pricing of Pharmaceutical Products: Evidence from the European Union,” 2004, The Research Institute of Industrial Economics, Stockholm, Sweden. Available at http://www.naringslivsforskning.se/Wfiles/wp/WP622.pdf (accessed June 11, 2008).
28. G. Nighswonger, “Pursuing Counterfeit Medical Devices” in *Medical Device and Diagnostics Industry*, January 2003. Available at http://www.devicelink.com/mddi/archive/03/01/021.html. (accessed June 12, 2008).
29. C. Bruderlin-Nelson, “Chinese Counterfeit Devices Elevate Health Concerns” in *IVD Technology*, November/December 2007. Available at http://www.devicelink.com/ivdt/archive/07/11/004.html (accessed June 12, 2008).
30. World Health Organization, “Medical Device Regulations: Global Overview and Guiding Principles, 2003. Available at http://www.who.int/medical_devices/publications/en/MD_Regulations.pdf (accessed April 4, 2008).
31. C. Organ, “The Impact of Technology on Surgery,” *Arch. Surg.* **134**(11), 1175–1177, 1999.
32. N. Smith, Aging Population Drives Rise in Global Healthcare Costs,” News Office press release, 2003, Massachusetts Institute of Technology. Available at http://web.mit.edu/newsoffice/2003/novartis-1001.html (accessed June 10, 2008).
33. ECRI, “Automatic Identification of Medical Devices,” U.S. Food and Drug Administration, 2005. Available at http://www.fda.gov/cdrh/ocd/ecritask4.pdf (accessed June 10, 2008).
34. J. Solonika, “Convergent Medical Technologies: Local Impacts, Global Opportunities,” YorkBiotech Inaugural Meeting, 2005, Ontario, Canada.
35. C. Larsen and J. Spitzley, “Package Materials and Systems for Sterile Medical Devices,” 2007. Guest lecture for the Medical Packaging course at Michigan State University.

36. U.S. Census Bureau, International Data Base, August 2006 version. Available at www.census.gov/ipc/www/idbsum.html (accessed June 5, 2007).

37. US Census Bureau, P70-61—American with Disabilities: 1994–1995 in *Current Populations Reports—Household Economic Studies*, 1997, US Department of Commerce: Washington, DC, USA. 1-8. Available at http://www.census.gov/sipp/p70-61.pdf (accessed July 14, 2008).

METAL CANS, FABRICATION

Jean Silbereis
SLCC Can Consultants
La Tour de Peilz, Switzerland

The metal can is one of the oldest forms of packaging preserved food for long periods. In the same way, it has proven to be an adequate container for food stuffs, beverages, and industrial products. Thousands of different products of all kinds have been packed in metal cans. The traditional method of manufacture is to start with a rectangular sheet of tinplate or canstock that has special surface treatments. Blanks, or bodies, are cut from the sheets, flexed and rolled into a cylinder, and then notched and hooked so as to form a locked side seam, which results in a longitudinal joint line bonding both the lateral cut edges of the blank.

Bodies are beaded for increased resistance against implosion of the can. More and more can bodies are necked to use ends of reduced diameters or/and thinner and more economical end stock, as well as to make cans stackable.

Ends, i.e., the closures at the bottom and the top of the cylindrical or any other geometrical section of the can body, are tightly secured to the body by a double seam (called so because they are made in two operations). Both extremities of the can bodies are flanged so as to create the body hook, which engages with the end hook so as to form a tight, compact, and interlocked closure. One end, which is called the maker's end, is fitted by the can manufacturer. The other, fitted by the filler or the packer upon filling the "open top" can, is known as the packer's end.

Because the container is made from three separate elements, it is known as a three-piece can. Its construction had remained basically unchanged for more than 150 years. Advances have been made in engineering, automation, and speeding up of the original manual canmaking processes. The metal input has been gradually and constantly reduced through more sophisticated design geometry and more recently by changing the methods of making the side seam from tin/lead alloy soldering to welding (see Figure 1).

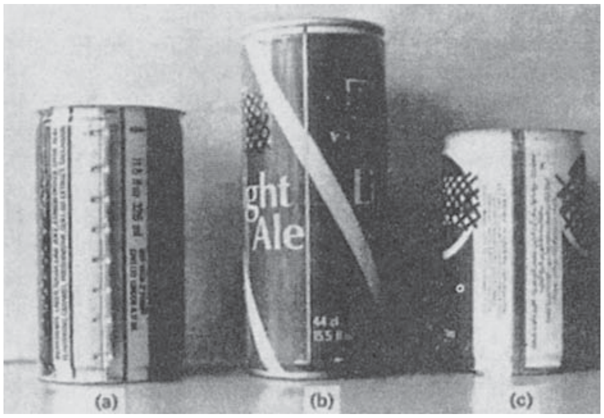

Figure 1. Three-piece can side seams (**a**) soldered; (**b**) cemented; (**c**) welded. Courtesy of *Proceedings, 3rd International Tinplate Conference*, 1984.

Since the early 1970s, a different concept of canmaking has gained acceptance in commercial production. In this, the body and one of the ends, are formed in one entity from a flat circular blank by press forming technique (1). The open top end is sealed with the usual packer's end. It is known as two-piece can. The methods of forming are identified: drawing and ironing (D&I in the United States, DWI in Europe) and draw and redraw (DRD) (2). D&I, for instance, was used in World War I for making shell cases. What distinguishes them in canmaking is the use of ultrathin metal in high-speed production to yield outputs counted in billions of cans per year.

CAN TYPES

All processes convert flat sheet material into finished cans, which are supplied with a loose end for the packer or filler, according to this basic scheme: prepare plate matching the products to be packed, their filling and processing conditions as well as market conditions (climates, shelf lifes, presentation of cans, sanitary regulations, etc.); make bodies and ends; apply finishes (decorative or/and protective barriers). The order may vary, depending on the process used. The manufacture of three-piece and two-piece DRD cans starts with the finishing step. Some cans are resprayed with a top coat for increased corrosion resistance in a final stage of fabrication.

Coils are usually cut into sheets or scrolled strips (technique Littell) if coil coated stock is used. Sheets are coated on one or both sides and are decorated if appropriate. The coatings are called enamels in the United States and lacquers in the United Kingdom. Decorations are always protected by over-or finishing varnishes to make them scratch proof and to add gloss. In case of processed cans, decorative or barrier coats have to resist the applied heat treatments in autoclaves.

If the starting point is a circular blank, as for DRD cans or ends, then the cut edges of the sheets are scrolled for economy of metal usage (Figure 2). Alternatively, precoated coil stock may be fed directly into the cupping press for blanking and drawing or into the multi-die end stamping press. In the manufacture of two-piece D&I cans, plain coil, as supplied from the mill, is the starting point.

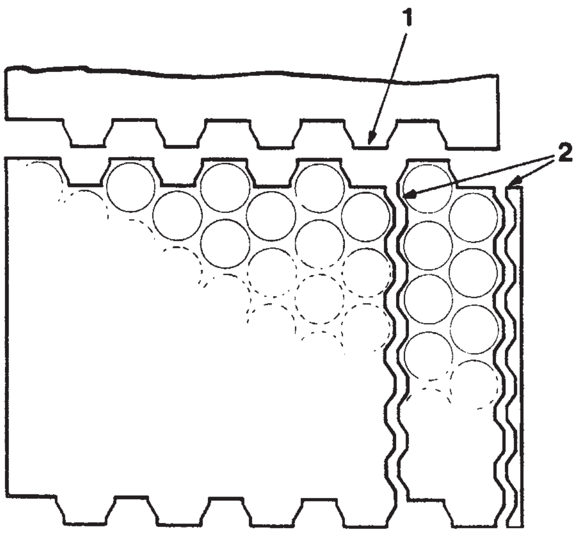

Figure 2. Scrolled sheet showing layout of blanks and scrolled edges for material utilization. 1, Primary scrolling used when cutting coil into sheets for coating. 2, Secondary scrolling used for cutting sheets into strips for feeding into the shell press.

Three-piece can manufacture is readily adaptable to making cans of any diameter and height. The production equipment is amendable to changes in size and is capable of production speeds of up 700+ cans per minute when cans are made as singles. In case of multi-high canmaking, the bodies are scored to final individual height prior to rolling and welding; subsequently separated outputs of 1200 to 1500 cans per minute are achieved on appropriately designed lines. Where the use of lead/tin solder is no longer acceptable, the change to welding can be made at minimal cost on existing lines, because only the equipment that makes the cylinder (the bodymaker) needs to be changed.

Three-piece manufacture is the choice of the small-to-medium-sized operation requiring flexibility for producing can sizes required in relatively modest quantities or to suit a variety of fill products that require changes in coating specifications. This is the salient asset of three-piece canmaking facilities. It allows the manufacture of various can types, i.e., food, flat and/or carbonated beverages, aerosols, and general line cans (industrial and dry products) by adding the adequate complementing equipment at limited cost to the existing line as long as the bodymaker can cope with the range of cans to be made.

Two-piece can manufacture is basically suited to a single can size, which requires outputs of at least 150 to 300 million cans per year. Yearly productions of modern lines are usually much higher, i.e., in the range of 400 to 500 million per annum. DRD, using precoated sheet or coil material, is used for food cans and predominently in the shallower sizes ($h/d < 1$). The process is being used, however, for food cans with an h/d ratio of 1.5 in the popular 3-in. (7.6 cm) diameter, e.g., 300 × 406 in the United States (for explanation of can dimensions: The first digit stands for inches and the two last ones, for sixteenths of inches; the measures are taken on the finished can overall in length and over the double seems in diameter).

The application of enamel to both sides permits the use of electrolytically chromium coated steel (ECCS), which has a surface that is too abrasive to be used uncoated (plain). It does also not offer any corrosion resistance. Because economics demand the use of the thinnest possible can stock, the high strength needed dictates the use of double-reduced (DR) grades. Additional strength is provided by beading or reforming the can bodies and adapting the profiles of the ends for increased flexibility in the autoclave, i.e., providing a maximum of expansion volume.

Generally, using two presses with a minimum of peripheral equipment, DRD provides a compact installation of relatively low capital cost for the achievable outputs. For that reason, it seems to be a preferred method for self-manufacture (captive canmaking) of relatively shallow containers by packers (e.g., tuna fish cans). However, the material property requirements and its constance of drawability are high, and the standard of enameling is critical to maintain integrity as the metal is formed.

D&I converts a plain coil into a fully finished can in a totally integrated, fully automatic process. The high capital cost of the full range of equipment needed implies a high volume in a nonfluctuating and constant ensured market. Together with the desirability of keeping the line running once harmonious operation has been achieved, this results in a 24-hour per day, 7-day per week operation with annual production up to planned business feasibility studies. Basically a single-can-size process, it is best suited for the production of beverage cans, which are made worldwide in a few standard sizes for use of high-speed filling-closing lines. D&I thin-walled cans are pressure packs (4 to 6 kg/cm^2 constant pressure in carbonated drinks cans and much higher in D&I aerosol cans). Their rigidity derives from the high inside pressure. Such pressures are currently generated in noncarbonated fills by inoculating a specific quantity of liquid nitrogen into the headspace of the filled cans just prior to closing the cans. This offers more and vast opportunities for lightweight two-piece D&I cans.

Either tinplate or aluminum is used, usually on a dedicated line. In recent years, because of the uncertain economics relating to metal costs, new lines are built as "swing lines," which basically can handle either metal. It does nevertheless require some downtime to make the change over, and lines normally operate continuously on the one metal.

THREE-PIECE CAN MANUFACTURE

The manufacturing process of three-piece cans is as follows: cut up coil stock into rectangular sheets; coat and/or decorate sheets; slit into rectangular blanks; form cylinders and side seam (soldered or nonsoldered, or welded side seams); inside and/or outside side seam striping (lacquer or powder application and curing); separate cylinders in case of multi-high cylinders; neck and or bead if appropriate; expand or reshape or reform cylinders if appropriate; form flanges at both extremities; fit maker's end; organized visual inspection or/and automatic leak testing; and casing or palletizing (see Figure 3).

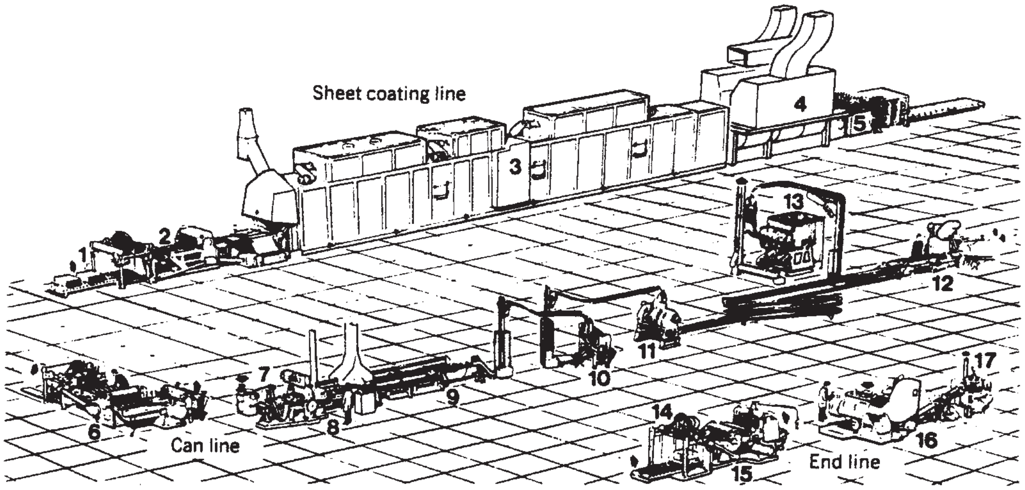

Figure 3. Three-piece can manufacture. Sheet-coating line: 1, sheet feeder; 2, roll coater; 3, oven; 4, cooler; and 5, unloader and sheet stacker. Can line: 6, slitter; 7, blank feed; 8, bodymaker; 9, side seamer; 10, flanger; 11 beader; 12, end seamer; and 13, tester. End line: 14, sheet feeder; 15, secondary scroll shears; 16, shell press; and 17, compound liner. Courtesy of Metal Box Ltd.

Cans for corrosive or delicate products (carbonated beverages or red fruit, etc.) are internally spray coated and cured prior to applying the maker's end. This coat is called "top coat," whereas the "bottom coat" is applied on the flat sheet in roller coaters and cured in wicket ovens. Both bottom and top coats can be spray coats with or without intermediate curing (spray–spray–cure or spray–cure–spray–cure).

Slitting. Large rectangular sheets of can body stock, precoated if required on one or both sides by roller coating techniques, are slit by pairs of circular knives (3) on tandem slitters, first logitudinally into strips in which the width corresponds with the development of the can bodies, and then transversely into rectangular blanks of the appropriate size corresponding with the can height, respectively, with the allowance to form the welding overlap (or the lock side seam in case lap-locked side seamed cans are made, soldered, or nonsoldered or cemented).

Because welded cans have considerably less overlap (0.4 to 0.8 mm) at the side seam than soldered cans (side seam allowance), slitting demands more rigorous precision (dimensions and right angles) than is needed for soldered can blanks. Circular slitting cutters can be positioned accurately by applying internal pressure at the bore of the cutter hubs to expand them so as to move freely on the slitter shaft (4). The said hubs can also be blocked on the shafts by screw jammed wedges or by application of hydraulic pressure (compressed grease) inside the hub. Any of these proven methods must apply the needed jamming pressure perfectly symetrically to avoid distorting the setting (narrow slitting gap, usually 5% of the body stock thickness) or/and cause wabbling of the slitter knives' cutting edges.

Bodymaking, Soldered Cans. The solder alloys commonly used consist of 98% lead and 2% tin. As more and more countries impose lower limits of lead content in food, the soldered can is being phased out in Western countries, if not being banned altogether as in the United States. Nevertheless, many soldering lines around the world will continue in operation for some time. The machine consists of a "bodymaker," which feeds single blanks from the feed hopper, and then scores (in case of multi-high can bodies), flexes, and forms the blanks into cylinders after slit and clip notching and hooking. The bodymaker is coupled to the side seamer, i.e., the soldering attachment where the joint is soldered and wiped off the excess of solder accumulated at the outside of the side seam.

Blanks are still commonly transferred manually from the slitter blank collector, although equipment exists for automatic transfer. In the first case, a visual check for quality and eventual rejects is possible, whereas sophisticated devices check automatically any miscut blanks and trigger the programmed intervention. The prepared hooks, or edges, as prepared and formed in the hooking station(s) of the bodymaker are interlocked on the forming horn and are compressed in the horn spline groove by the bumping steel. For high-speed operation, the body cylinder is usually formed by a pair of wings. (The term "wing form bodymaker" contrasts with "roll form bodymaker," which is a former American Can Co. technique.) In this technique, bodies are rolled and consecutively notched and hooked in the rolled shape.) Liquid flux is applied on one or both hooks prior to engage and bump the side-seam on the forming horn.

The lap-lock assembled bodies are fed out of the bodymaker and picked up synchroneously and individually by the clamping pawls of the soldering chain. The side seam area is preheated by ribbon gas burners before passing over a longitudinal solder roll where solder is applied. The presolder ribbon burners preheat the side seam, and by appropriate setting of the "bow and counter bow" burners the side seam is kept as straight as possible. When applying solder, post-solder ribbon burners ensure that the solder is "sweat" into the capillary gaps of the side seam, after which a rotating wiper mop removes excess solder, mainly in the form of blobs. Any solder splashes toward the inside of the can bodies have to be avoided. Rotary solder splash shields provide for this.

The can is then cooled by air jets before conveying to the downstream finishing operations. As lead contamination has become an increasing concern, the wiper mop unit has been the subject of considerable improvement to contain the lead dust generated by its operation, particularly at high-speed canmaking operation. By its nature, the process requires the use of tinplate, although blackplate had been soldered during World War II in the United States. To ensure sound soldering, a minimum "solderability" has to be ensured: rugosity of the steel base, a minimum of alloyed and free tin, oxidation, and so on. The line operator's skill and experience will overcome most of the material inherent drawbacks, the major one of which is the fluctuation of stiffness of the steel base of the blanks (open or thick laps).

Bodymaking, Welded Cans. The side seam is made by a resistance-welding process using the "lost-wire-electrode" principle (5) as well as *The Canmaker* June 1996 issue Evolution of a bodymaker by Sigfried Frei, Frei AG Switzerland. Body blanks are fed from the bottom of the feed hopper and then transferred through double blank detectors; then, the blanks are scored for eventual multi-high can bodies and flexed into the forming rolls (See Figure 4).

The two laps of the rounded cylinder are butted in the grooves of the Z-bar, and the cylinders are pushed along the Z-bar by one or more driven chains provided with pawls. Upon perfect radial centering in the Z-bar, the cylinders are introduced into the welding rolls at the same speed as the said rolls are driven at. The actuating mechanism of the reciprocating introduction pusher pawls are designed so as to guarantee that pushing speeds are accurately matching the peripheral roller electrodes speed. Only the outer electrode is driven.

Overlap accuracy over the full length of the side seam, which is also dependent on gauge and temper of the plate, has to be controlled as to avoid bodymaker jams and wrecks or mainly irregularly welded side seams. The two overlapping edges of the cylinders are bonded by a-c resistance continuous nugget welding using approximately 4000 to 7000 A at 8 to 5 V. Both overlapping edges must be free of contamination, each one on both sides (lacquer splashes or traces) to eliminate variations of resistance, which would lead to welding faults as well as eventual copper wire ruptures.

A significant amount of energy is lost in heating other parts of the welder, such as welding arms and electrodes, which need water cooling. In high humidity, this can lead to problems with condensation. Thermostatically controlled cooling media, even on upper acceptable limits of operation temperature, should avoid reaching dew points.

Each resistance welding spot, which is called a nugget, is achieved by one half of the a-c wave cycle. Welding current supply to the electrodes and welding speed are limited because the nuggets should overlap longitudinally to ensure a homogenous side seam over the full length of the side seam. To achieve higher welding speeds of up to 120th per minute, higher welding current frequencies have to be generated via an alternator or static transformers. Other sinuosoidal waveforms are applied and contribute to reaching high welding speeds coping with different canstock surface conditions.

Earlier systems used a large overlap (2 to 3 mm) and raised the steel temperature to the melting point by applying welding roller pressure to forge weld the metal. The latest welders use a small overlap as mentioned (0.4 to 0.8 mm) with metal temperatures just below the melting point and increased roll pressure to forge the two laps together. To ensure reproducible welding conditions over the full length of all double seams produced, the electrode contact is made by endless copper wire wrapping around both welding rolls and moving the cylinders at the preset welding speed. Any contamination of the welding electrodes by tin pick-up is thus continuously removed from the contact area. After use on both sides of the profiled wire, it is either chopped or rewound for recycling.

Having dealt effectively with the problem of tin contamination of the copper wire electrodes, the system paradoxically requires a minimum of tin coating on the can stock, around 0.09 lb/bb on both sides (1.2 g/m^2 on one side.) Table 1 shows the comparison of properties of various materials wherein nr 25 and nr 10 stocks have respectively tin coatings of 2.8 and 1 g/m^2 on one side. TFS or ECCS materials, as well as blackplates, are poorly weldable if at all under acceptable production conditions. They have to be "edge cleaned," i.e., the oxide films have to be abrased from the four sides of the overlapping edges of the side seam. Edge cleaning has, however, never found reliable solutions apart from edge cleaning by "edge milling" as practiced by the Continental Can Company in their Conoweld Technique. This system used welding rolls without an intermediate copper wire, but it is now of less importance in high-speed canmaking, mainly because of the frequent need for changing the electrode rolls.

The integrity and quality of the seam weld is usually tested by visual and mechanical means (e.g., Ball test). For a more detailed examination, weld cross and longitudinal metallographic inspection will reveal any sign of separation between laps, cavities and so on. Radiographical examinations are also used for quality inspections. Welders have been fitted with "weld monitors" to monitor welded seam quality continually. Usually, these monitors rely on measurements of voltage or current fluctuations between the welding electrodes. Welded seams, as well as single nuggets, made outside the preset limits are detected, and the faulty cans are ejected. Other monitoring systems have been explored for enhanced performance and were based on weld temperature or on the final thickness of the forge-welded overlapped side seam.

Renewed effort went into welding the side seam by means of a laser beam (6). The principle of can welding by a laser was demonstrated in the late 1970s, but welding speeds seemed to be too low to justify commercial exploitation. The technique was then discarded. Positive results of other ongoing research and development (R&D) work on the subject in the United States, Europe, and Japan are not known. Apart from the elimination of costly copper wire, the method offers pure butt welding with advantages to double seaming of the ends, necking, as well as

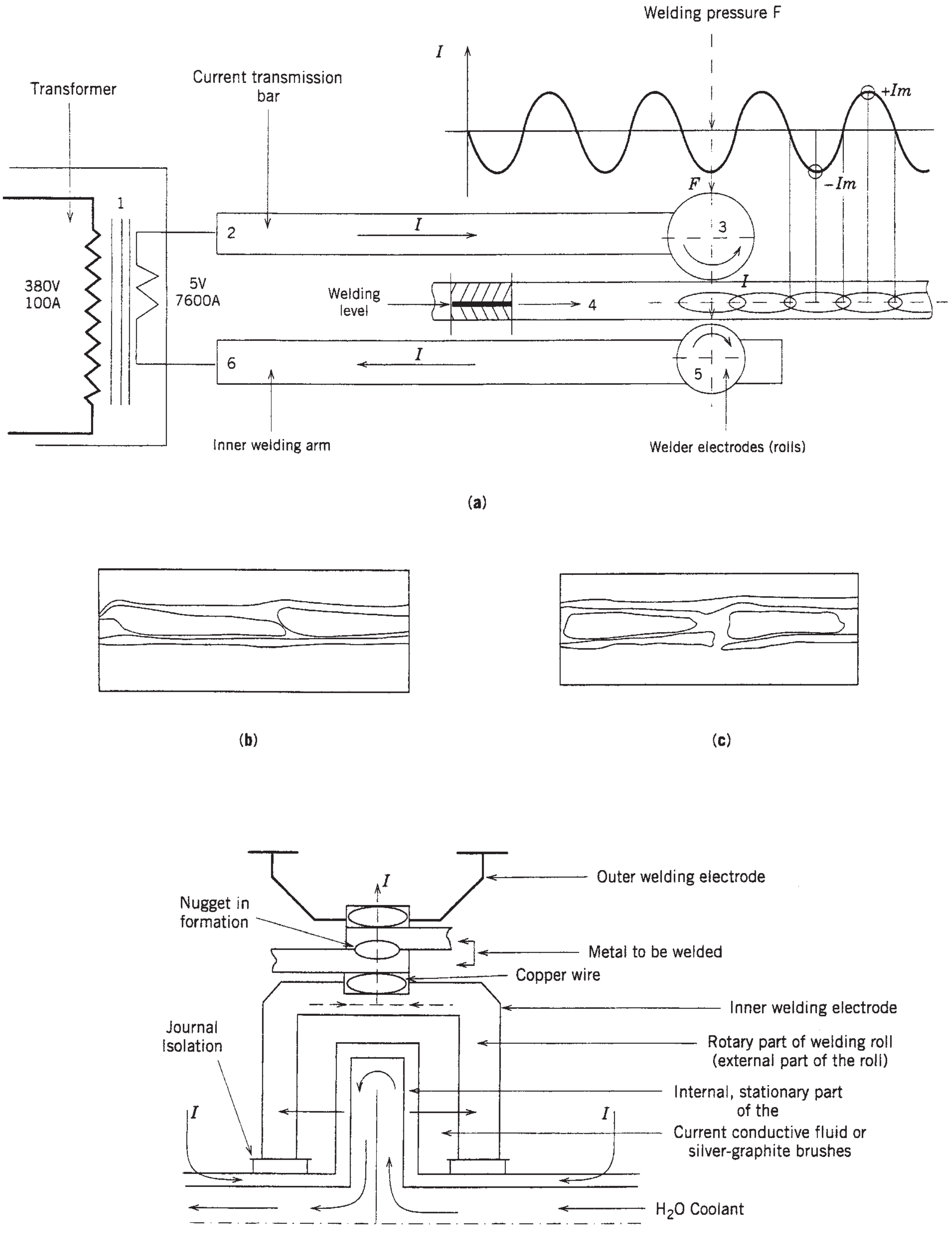

(a)

(b)

(c)

(d)

Figure 4. (**a**) Fundamentals of electric canbody welding. (**b**) Longitudinal section of a welded seam showing overlapping weld nuggets (40 ×). (**c**) Longitudinal section of a welded seam showing separated weld nuggets (40 ×). (**d**) Section through elements involved directly at the welding station.

Table 1. Comparison of Properties of Various Materials[a]

			Properties[a]		
Material	Section structure	Weldability	Lacquer adhesion	Iron Pickup Value (IPV)	Filiform corrosion (FFC)
LITEWEL-N	Cr^{ox} Cr^{o} Sn Ni-Sn-Fe Base steel	○	○	•	•
#25 Tin plate	Cr^{ox} Sn FeSn_2 Base steel	•	Δ	•	•
#10 Tin plate	Cr^{ox} Sn FeSn_2 Base steel	○	Δ	Δ	○
TFS	Cr^{ox} Cr^{o} Base steel	x	•	○	•
Low-nickel-plated steel	Cr^{ox} Cr^{o} Ni_2 Base steel	Δ	○	○	○

[a] •Excellent ○ Good Δ Normal x Poor Cr^{ox}: Chromium oxide Cr^{o}: Chromium metal

Source: NKK Technical Bulletin—The Steel Canstock Guide by Elizabeth Parr, Sheffield, UK.

versatile decoration such as wrap-around printing. The copper-wire-welded seam and the plain welding margin in case of lacquered insides of the cylinder interrupt an otherwise smooth inside enameled (or plain) surface. The welded seam contains exposed iron and iron oxide as well as eventual traces of copper besides tin at either side of the weld. To protect the product from contamination and/or the weld from attack by the product that still results in contamination of the product, the side seam needs to be coated in most cases.

The formation of iron oxide can be avoided by neutral gas welding, in which case the weld area is isolated from the atmosphere by neutral gas jets such as nitrogen and a small percentage of hydrogen. This can be done at the inside and/or at the outside of the side seam.

Bodymaking, Cemented Cans. Cans used only for dry or otherwise neutral products, such as powders of specific natures, mineral or/and vegetable oils as well as many industrial products. Melted organic cements are injected into the inner hook of lap-locked side seams and, after engaging and flattening the side seam, they act as sealents. Before the almost universal use of two-piece cans for high-output beverage-can production, one method for making them was to cover the longitudinal edges of the blanks with a nylon strip, which was fused after forming the cylinder. The process has a many of proprietary names (eg, Miraseam and A-seam). An advantage was the complete protection of the raw-cut edges of the blank. It could only be used with precoated TFS, because the melting point of tin is close to the fusion temperature of the plastic. Even tapered corned beef cans were made in this way. When tin prices were a multiple of the current ones, using TFS was most cost-attractive solution. Cost cutting in metal packagings is therefore not an exclusive present-day problem. The bodymaker used to make the nylon-bonded cans was an adaptation of the soldering configuration.

Completing the Body. The plain cylinder must be furnished with a flange at each extremity of the cylinder or otherwise odd-shaped body for attachment of the closure. For food processed in and with the can, where the can may be subjected to external pressure especially at the cooling phase of the autoclaving cycle, or remain under internal vacuum during storage, the cylinder wall may be ribbed or beaded for radial strength. Beading profiles and distribution along the can body are to be designed so as to reach the desired proportion of radial against axial resistance of the cans.

Cylinders for shallow containers, especially those that cannot be made on bodymakers because of limited minimum cylinder height, may be made “multi high,” i.e., in a length suitable for two or three cans to obtain maximum efficiency from the forming machine. The welding speed remains unchanged thereby whereas the mechanical motions are divided by 2 or 3. Two techniques are used for parting the multi-high bodies into their double or triple components by breaking the score line or by cutting peripherally the unscored bodies.

TWO-PIECE CAN MANUFACTURE

Metal Forming Methods. Both methods of making two-piece cans use metal-forming principles that depend on

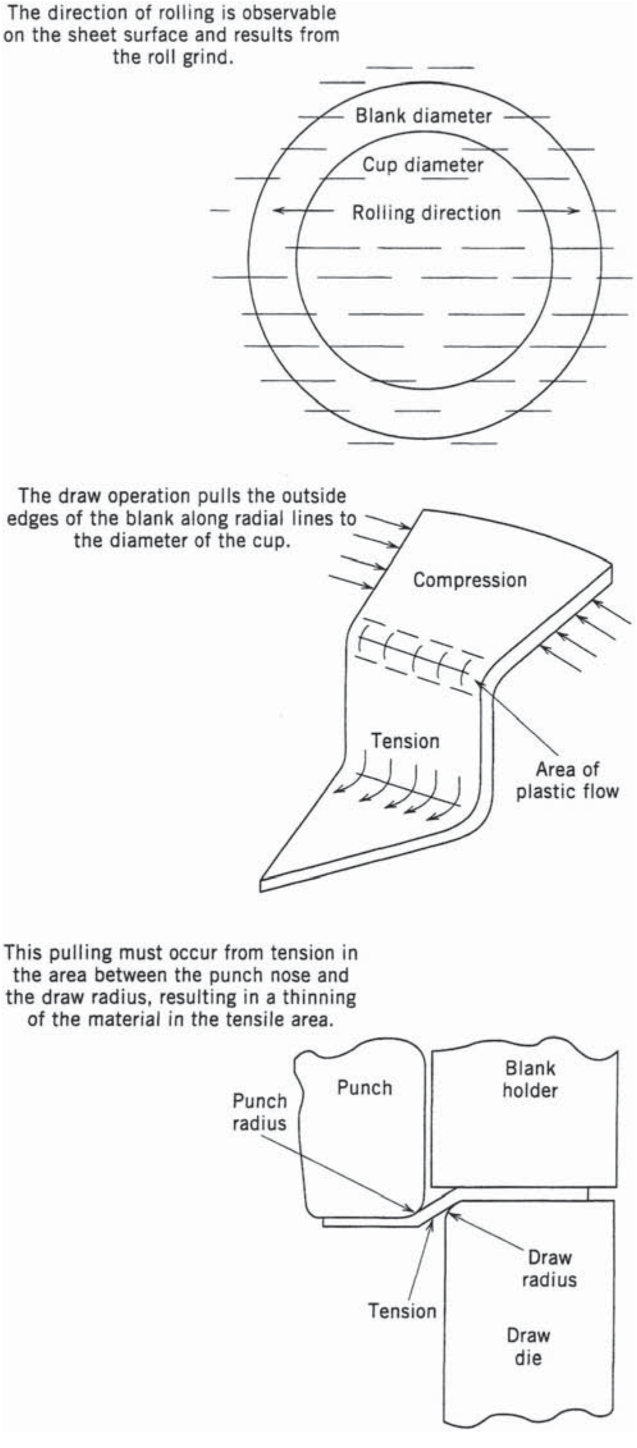

Figure 5. Basic stresses and strains. Courtesy of ALCOA Forming Aluminum.

the properties of metal to “flow” by rearrangement of the crystal structure under the influence of compound stresses without rupturing the metal.

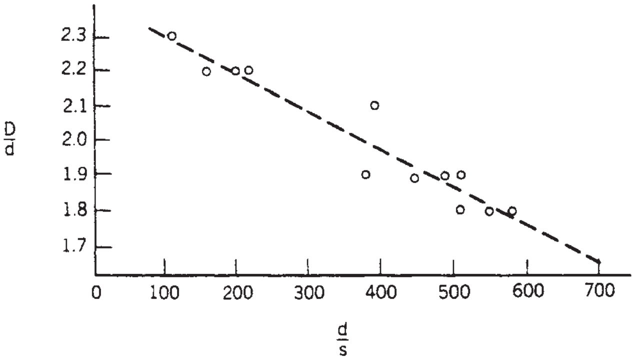

Figure 6. Limiting draw ratio. The maximum blank diameter which can be drawn into a cup without metal failure. The relationship illustrate the significance of sheet thickness (gauge). D = blank diameter; d = punch diameter; s = sheet gauge. Courtesy of International Tinplate Conference, 1976.

Drawing. In drawing, as applied to can manufacture, a flat sheet is formed into a cylinder or other section, such as oblong, e.g., fish cans, by the action of a punch drawing it through a circular or different shaped die. See Figure 5 showing the basic tool parts involved and the stresses and strains occuring in the material. Some thickening toward the upper part of the drawn element is inevitable, but the process is essentially one of diameter reduction at constant metal thickness and volume so that the surface area of the drawn part is practically equal to the surface area of the blank from which is has been formed. This factor forms the basis of design, in particular the calculation of metal use. The amount of diameter reduction achievable, i.e., from blank to cup diameter, is governed by the properties of the material, the surface friction interactions between the tooling and the material influenced by the tool, and material surface conditions and lubrication. The blankholder force is an additional factor that adds to the drawing force which the material has to stand between punch and draw radii. Drawing has been the subject of much research. One of the classic relationships is shown in Figure 6.

The diameter of the cup produced in the initial draw may be reduced even more by a similar redraw operation with a draw sleeve fitting between the punch and the

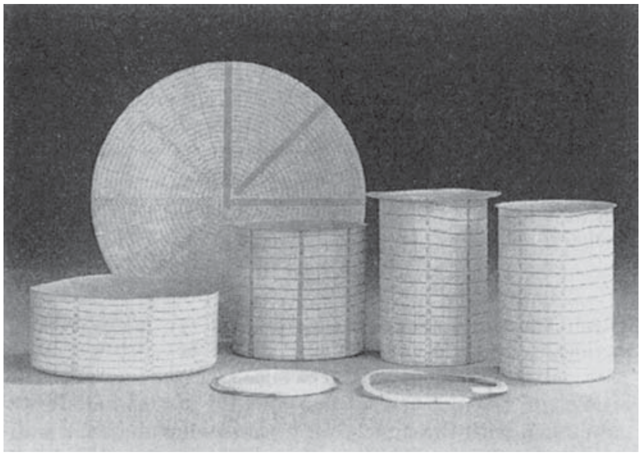

Figure 7. Reduction in diameter is accompanied by a corresponding increase in height. Courtesy of Styner O Bienz, Nieder Wangen/Bern Switzerland.

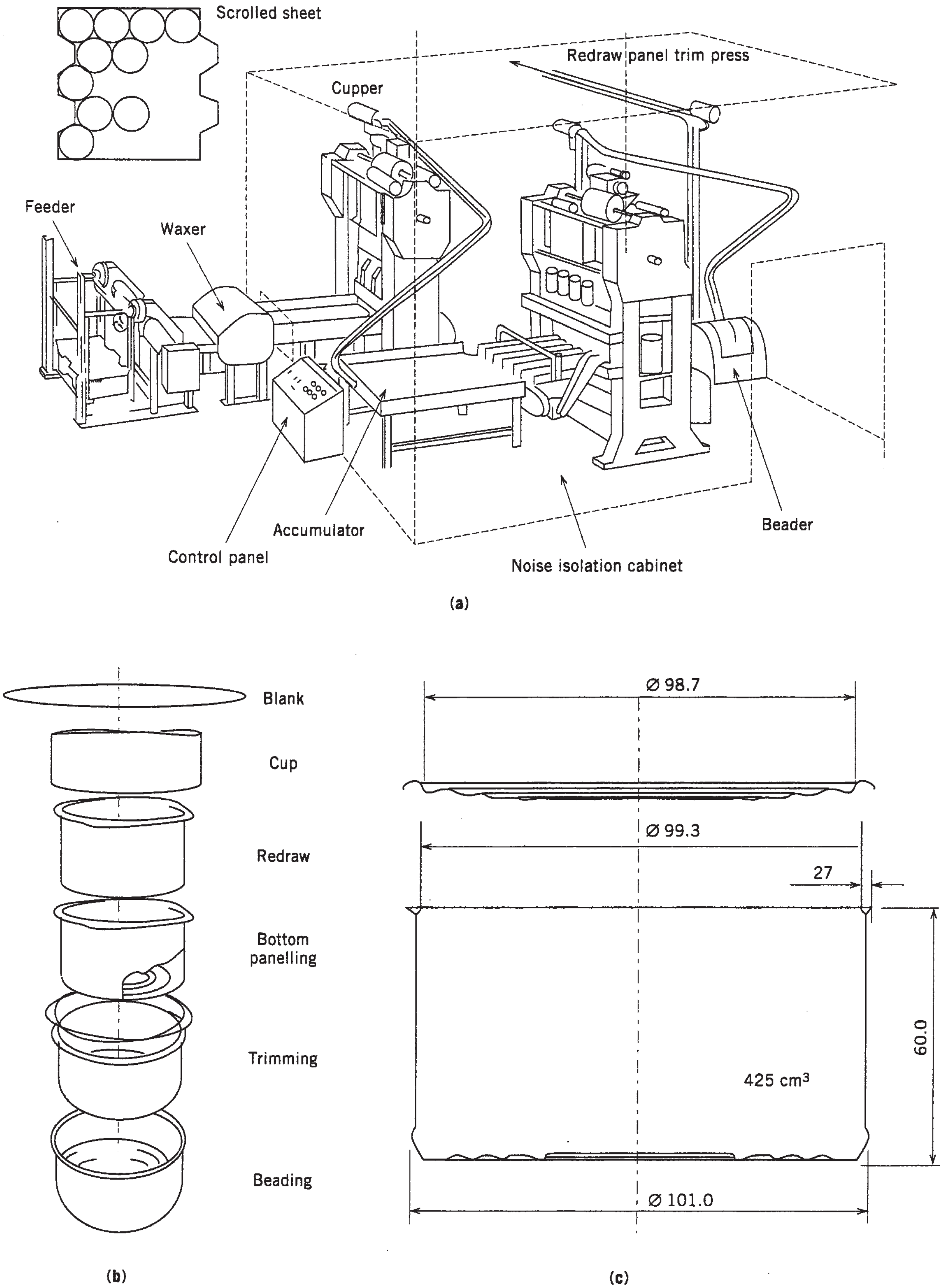

Figure 8. (**a**) Typical lay out of medium production of DRD cans. Courtesy of Ferembal Nancy/France. (**b**) Sequence of DRD fabrication steps (**c**) Typical 401 × 206 DRD can with end (for ref. only).

inside diameter of the cup. The said draw sleeve acts as a blankholder. The rule of constant area and volume determines that the reduction in diameter is accompanied by a corresponding increase in height (see Figure 7). The redraw operation can be repeated in several drawing stages, provided the progressive reductions fall between definite limits to avoid metal failure. Draws can be made “through the die,” and the drawn part be stripped from the punch at the end of the press stroke below the die or the press stroke can be limited so as to leave the drawn part with a flange. In this case, the drawn part is extracted from the die and is retained by the punch (friction and vacuum), and ultimately it is stripped from the punch for transfer or evacuating from the press. The stroke of the press has to be adapted accordingly. In the latter case, it is usually equal to 2.5 times the cylinder height as drawn. Figure 8(c) shows a typical drawn can provided with a stacking or/and label retaining bead if canstock is not decorated. Figure 8(b) is the sequence of operations from the blank to the finished can, and Figure 8(a) is a typical schematic layout of a DRD can production line of medium production capacity.

Wall Ironing. In pure ironing, as used in the D&I process, a cylindrically drawn cup is redrawn by the ironing punch and therefore precisely fits the said punch diameter. The redrawn cup is then forced axially through a set of ironing die rings, whose diameters, which are progressively decreasing, create a gap with the punch that is smaller than the wall thicknesses of the redrawn cup and the consecutive wall thicknesses from t1 to t4; see Figure 9(a) whereon the stated wall thicknesses are related with the punch and rings radii differences.

The process, which is similar to impact extrusion, thus results in a reduction in wall thicknesses at a constant diameter excepted for t3 where the punch diameter is recessed so as to form the “thick wall.” t4 is the “thin wall” that is reduced from 0.22 mm for t0 down to 0.07 mm. Here too, the governing principle is the constant metal volume. In other words, the volume of the metal in the ironed can body (prior to trimming) is equal to the ingoing cup and consequently to the original blanked disk. Note the sequence of operations in Figure 10. The amount of reduction at each stage is determined by the material properties, governed by the needs to avoid metal failure. The high friction, under extreme surface pressure mainly at the outer surface of the ironed can body, makes special demands during lubrication, which is combined with copious flood cooling to maintain the critical punch-to-die gap.

A similar effect can be obtained in drawing if the gap between the draw die and the punch is less than that of the metal being drawn. It is common practice to keep this gap equal to the nominal thickness of the canstock to control thickening caused by diameter reduction. This process is called sizing. The drawing gap can be reduced even more to produce a definite thinning of the wall, relative to the base material as a combination of drawing and ironing, or thinning. Special lacquering is primordial in this case.

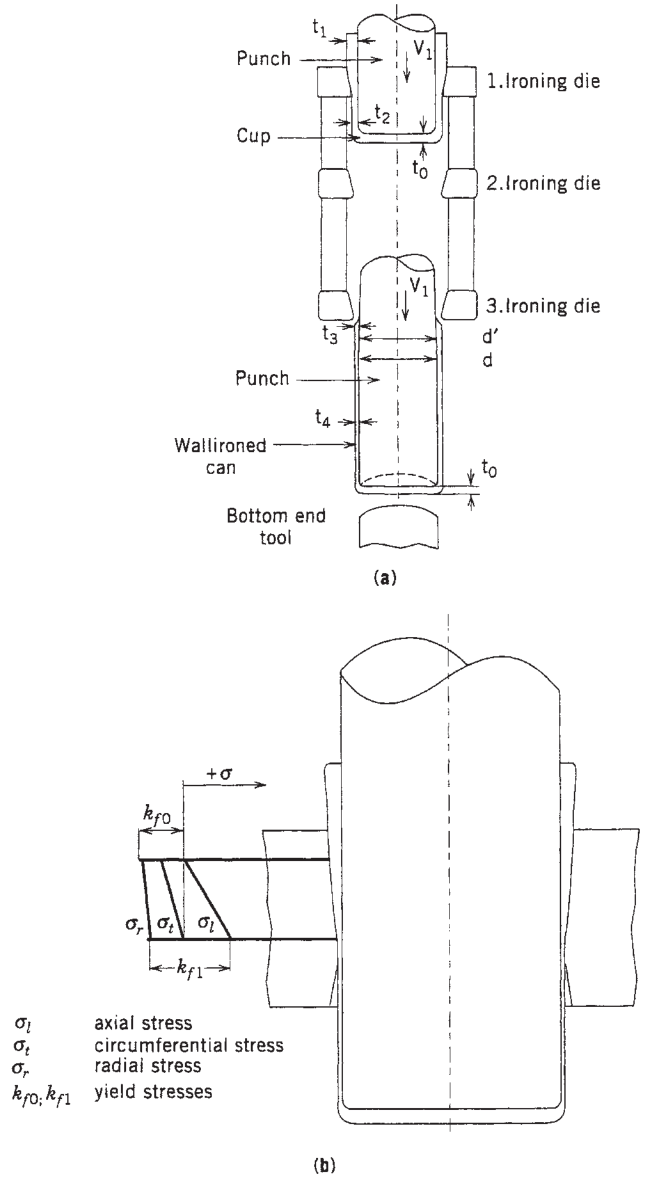

Figure 9. (**a**) Schematic of wall ironing principal Courtesy of: Tin-plate and modern canmaking technology by E. Morgan (**b**) Ironing DWI can body and stresses on the material. Courtesy of Rasselstein AG Germany.

D&I Can Manufacturing. The procedure of producing D&I cans is schematically as follows: unwind the plain coil; lubricate; conduct blanking and cup drawing; redraw; execute wall ironing; perform dome forming; trim body to correct height; wash and surface treat (if appropriate as for aluminum); implement dry or wash coat; and cure. Then for *beverage cans*, the process is as follows: base coat outside and cure (if appropriate; decorate and cure); coat inside and cure (eventually a double coat); and neck and flange open end (in the case of a tinplate, the order of the last two operations may be reversed). For *food cans*, the process is as follows: wash coat outside; neck and/or flange as appropriate and if body is not beaded; body beading; and coat inside (in some lines the order of the two last

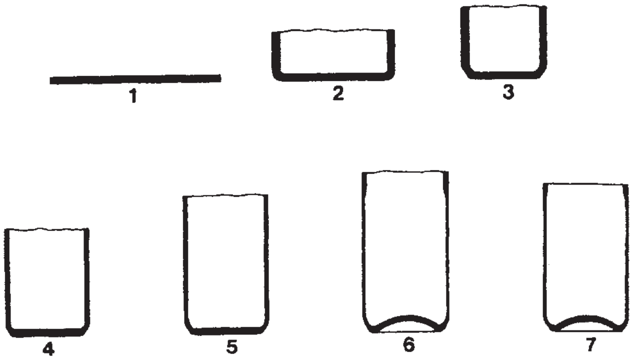

Figure 10. Stages in forming a D&I body. 1, Circular blank; 2, cup; 3, redraw; 4, first ironing stage; 5, second ironing stage; 6, third ironing and dome forming (note thickening at top where flange is to be formed); and 7, trimmed body.

operations is reversed). The *closures*, or *ends*, are made from precoated sheets or coil on multi-die presses, which are profiled in such a way that internal pressure will not cause any permanent deformation (peaking) in the chuck wall radius area. Their turned down edge of the flange (crown shaped or plain) is curled so as to allow stacking and automatic handling and assist the formation of the double seam. A sealing compound is nozzle injected onto the spinning ends and then placed and centrifuged so as to form a gasket in the finished double seam (see Figure 11).

Compounds are either solvent based (hexane) or water based, which are, respectively, drying by evaporation of the solvent or by heat drying (hot air or various radiations).

The components of a D&I line are shown in Figure 12. The coils are shipped with the axis vertical, for safety and to avoid damage to the laps. A down ender is used to bring the axis horizontal and to transfer the coil to a coil car for distribution to one of several dereelers (unwind stands), each feeding one cupping press or cupper. Dereelers may be dual and engineered in such a way that coil changes are rapid either when coils are finished or if one has to be removed for being defective. The coil is passed through a lubricator where lubricant is applied by dipping in a tank; the excess is removed in a couple of rubber-covered rolls. The lubricant is constantly recirculated for filtering, temperature control, and bacteriological control. It is essential that lubricants, coolant-lubricants and washing chemicals be compatible and form a system possibly supplied by the same manufacturer. The steel coils are additionally and continuously inspected to detect pinholes and surface defects (visual inspection), and to monitor the gauge thickness, which is interlocked to stop the cupper when out-of-specification material is detected. The cupper (7) is a double-action press used to blank and draw the cups under a perfectly controlled blankholder force. Blanking the disk and drawing the cup are two consecutive phases in one stamping cycle or press stroke.

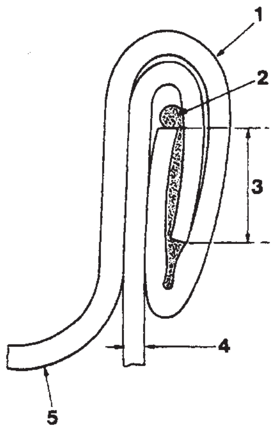

Figure 11. Double-seam closure. Showing fixing of end to cylinder, and function of lining compound: 1, end curl, folding round flange on cylinder, 2, lining compound; 3, seam overlap; 4, cylinder; and 5, end.

Depending on coil width, as many as 12 cups may be produced in one working stroke. The cuppers can be designed with top drives (Minster) or underdrive (Standun). Cups are produced at speeds of up to 200 strokes per minute.

The cupping process demands great precision because of (a) extremely narrow drawing gaps of 10% in excess of the material thickness, the between punch and die. Materials currently used have a thickness of 0.009” (0.24 mm) and canstock will undoubtedly become thinner still in the future. (b) Shreds (intervals) between two adjacent cuts of blanks is about 0.04 in. (1 mm). (c) All press and tool parts must be perfectly aligned, flat, parallel, and/or concentric. The cups should show no wrinkling or measurable or visual differences all around the walls. This is fundamental for successful ironing. The wall ironer (bodymaker in the United States) (8, 9) converts the cups into a cylinder with the correct preestablished and correct thickness distribution along the wall and dome shapes (the base) to resist elevated internal pressure. Figure 9(a) shows the arrangement of the ironing tool set as it is basically used in all ironers. At the end of the stroke, at the moment the punch reciprocates after the front dead point of the ram, spring-loaded stripper fingers, assisted by compressed air fed through the ram to the punch nose, strip the can body from the punch into a discharge conveyor, which transfers the cans sideways to the trimmer. For the alledged base of constance of metal volume, the length of the cans will vary with the tolerances of the material and toolings. The top end of the cylinder will be more or less wavy, earing, which is caused by specific characteristics of the canstock as long as toolings and alignments, as well as ironer stability, cannot be incriminated.

Ironers run at about the same speed as the cuppers, so that one wall ironer is needed for every tool or “out” in the cupper. In practice, one ironer was added as a stand by to bridge short interventions on the machine or/and clear jams, and so on. Newer generations of ironers run faster than the cupper and twin-ram machines allow to half the number of ironers in the canmaking line. Stand by must still be available as the loss of output is doubled during down time in case of twin-ram machines. The tooling uses inserts of carbides or/and ceramics in the ironing dies together with carbide or ceramic punches when steel cans

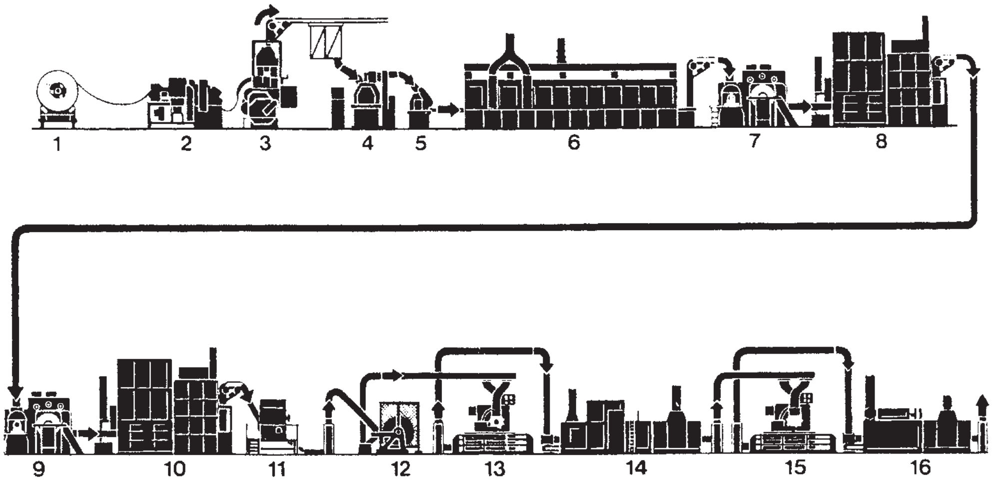

Figure 12. D&I can manufacture. Diagram showing all the equipment that may be required. 1, Uncoiler (dereeler); 2, lubricator, and optional coil inspection; 3, cupping press; 4 wall ironer (bodymaker); 5, trimmer, 6, can washer; 7, external coater; 8, pin oven, 9, decorator; 10, pin oven, 11, necker–flanger; 12, tester; 13, internal spray machines; 14, curing oven (IBO); 15, optional second spray; and 16, IBO. Courtesy of Metal Box Ltd.

are fabricated. Good quality tool steels are adequate for aluminum cans. Associated with every ironer is a trimmer to which the eared bodies are transferred positively held by the base either magnetically or by vacuum. Rail (sickel knife) or roller trimmers are used.

In rail trimmers, the end of the canbodies is trimmed between a mandrel mounted on a rotating turret and a stationary rail. A certain number of mandrels are fitted and the turret is in continuous motion.

In the roll trimmer, cans are indexed to a position where the end is inserted between two rolls and rotated about their axis while the rolls are closed, one being pivotly mounted, to perform a peripheral trimming, or cutting, action. In one widely used machine, the cutting rolls are mounted in an easily removable cartridge for refurbishing and precision-setting in a toolroom environment.

After trimming the canbodies to their specified height, they are mass conveyed in bulk, in upright position, to a washer. The cans are conveyed on a flatbed open-mesh belt, open-end down, through a series of compartments fitted with spray nozzles above and below. The top conveyors are used in each spray compartment to restrain the cans from falling over. After prewashing with detergents for removing drawing and ironing lubricants, the cans are washed, prerinsed, and rinsed with demineralized/deionized water. Aluminum cans commonly receive an etching treatment to make the surface receptive to organic coatings applied in the finishing operations. Deionized water rinse ensures stain-free drying.

Alternatively, the final rinse may contain an organic coating to protect the outside surface of tinplate food cans underneath the paper label applied by the filler. The washed and dried cans are now ready for receiving internal and external finishes, both structural (necking/flanging and eventual reforming) and protective (coatings and decoration). The food cans are usually beaded for the thin wall to stand buckling and/or implosion in the same way as with three-piece cans. The machinery, however, is differing in detail because of the presence of the integral bottom and the absence of side-seam extra thickness as on three-piece cans. Spin flanging is invariably used to avoid split flanges in the axial metal grain structure caused by ironing, although excessive work hardening does not occur. The top of the beverage cans is necked-in to yield metal cost savings through the use of smaller diameter and therefore thinner ends material. The first necking steps may be die-necking operations followed by spin necking/flanging. This method is finding increasing application (10). When the first cans were die necked and spin flanged from 211 to 209 diameter, they are now necked down to 202. It creates an aesthetically pleasing neck profile and contour when cans are spin necked, and this technique provides with minimal strain on the split-prone flange and low axial force on the can. For the smaller necks, such as 211/202, several die prenecks are necessary when die necking is applied (11). Single-stage prenecks are currently practiced by spinning. The final spin-neck/flanging operation is done either before or after internal protection depending on local circumstances. In general, aluminum requires an enameled surface to prevent pick-up (galling) on the tooling. In some way, the enamel acts as a lubricant.

DRD Can Manufacturing. The manufacturing steps are as follows: cut up the coil into scrolled sheets (eventually coil coated stock); coat and/or decorate sheets; blank disk and form cups; redraw once or twice depending on the h/d ratio of the can; form base (or panel can bottom); trim flange to applying width; bead (if appropriate); spray coat (either single or top coat on roller coated material according to pack) and cure; and test and palletize. See typical production setup in Figure 8. As in D&I, a multitool cupper (7) (Figure 8) is used to cut blanks from wide coils or scrolled sheets and form them into shallow cups. Their D/d ratio (blank to cup diameter ratio) as chosen will influence the performance of the subsequent draws if cups are reformed by one or two more draws, which progressively reduce the diameter and increase the height. By stopping the final draw at an appropriate point, a flange is left on the can, but as with all metal-forming operations, the eared and irregular collar has to be subsequently trimmed. Prior to this, the can bottom, or base, has to be profiled, or paneled (see Figure 8) so as to withstand processing requirements. All these operations are usually carried out on multilane, multistage transfer press. Setups have to be coherent with regard to their production capacity. Each follow-up machine should have a capacity of 0.5% to 1% in excess of the foregoing one, and controlled infeed should ensure that no jams occur at stops and starts of the infeed whereas the machines should not be stopped. However, because of the critical nature of the die-trimming operation, separate machines that employ different principles can be used, such as rotary trimmers. When simultaneously drawing and ironing, it is convenient to draw the body right through the die to achieve thickness control in the flange area. In this case, the body is trimmed and flanged in conventional D&I equipment. For taller cans, the walls may then be beaded in the usual machine.

Variants in metal forming equipment are the Metal Box rotary press line (12) (Figure 13) and the Standun opposed-action press. The latter features a split blankholder with separate pressure controls, which is claimed to permit greater draw reductions and provide control of wall thickness through stretching rather than ironing, which is said to be less severe on the coating. Equipment of various origins are on the market for small to high production. More intelligently designed lines are engineered together by canmaking experts on proven presses, machines, and reliable toolings. Figure 8 represents such a setup.

COATING

With the exception of three-piece cans for certain products, organic protective coatings are applied to both in- and/or outside surfaces of the cans. Internally, they provide a protective barrier between the product and the metal, whereas externally they may protect from atmospheric corrosion. Outside decoration provides product identity as well as protection especially if inks are protected by an overvarnish. Coatings are applied “wet,” i.e., the resins are suspended in a carrier for ease of application and allowed to coalesce, flow out, or extend for proper film forming. The coating is then baked, stoved, or cured, according to countries of origin, first to remove the carrier, which may be an organic solvent or a mixture, predominantly water (waterbased lacquers) and then to polymerize (cure) the resins. The methods of application are in general commercial use: roller coating in case of sheet stock or on the outside of two-piece cans and spraying on the inside of formed bodies. Spraying is predominantly used for the inside of two-piece D&I cans, but DRD cans are sometimes sprayed as well. Certain categories of three-piece cans are sprayed for carbonated beverages or

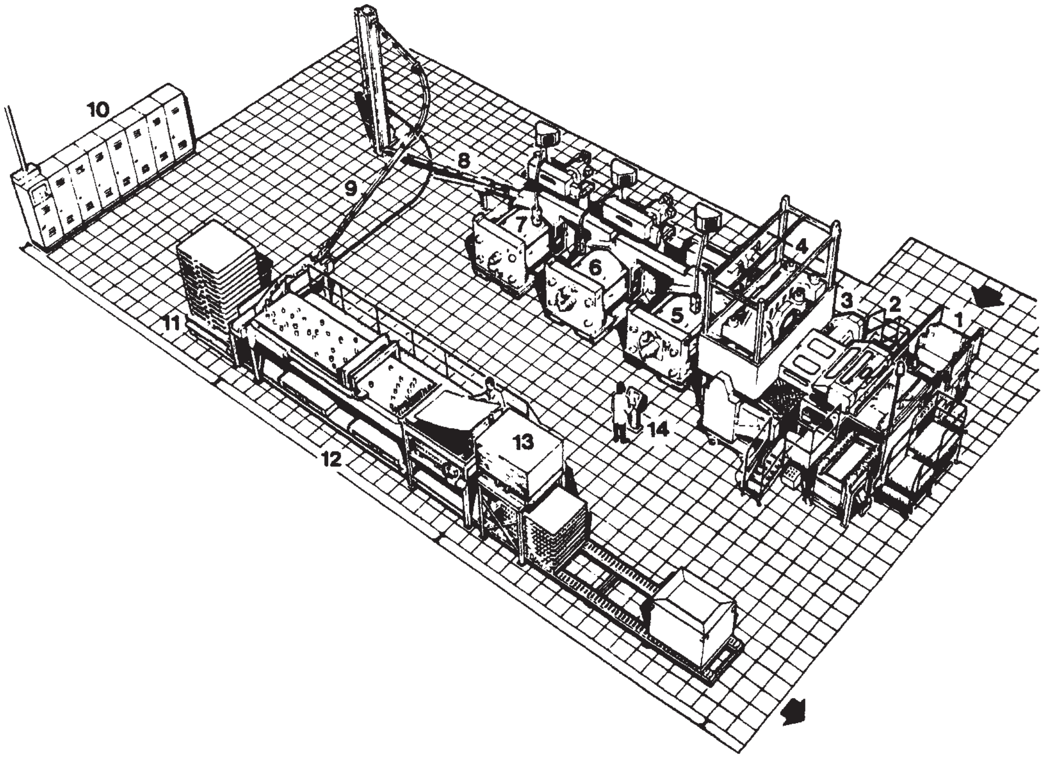

Figure 13. Rotary press DRD line. 1, Infeed conveyor (for stack of coated sheets); 2, lubricator; 3, sheet feeder, 4, cupping press,; 5 first redraw press; 6, second redraw press; 7, trimming and base forming press; 8, can sampling chute; 9, can conveyor (a tester is usually inserted here); 10, electrical controls, includes press synchronization; 11, pallet feed; 12, palletizer; 13, layer pads; and 14, master control station. Courtesy of Metal Box Ltd.

red fruit cans; the spray is a top coat applied on bodymaking and side seam striping, and the material has been roller coated. Alternative methods of application and curing are available, such as electrophoretic deposition. This method is also used widely for repair-coating Easy-Opening-Ends after conversion, i.e., scoring, riveting, and securing the pull tab. Drying and/or curing (polymerizing) are normally carried out by forced convection using hot air. To a lesser extent, inks and some lacquers are cured by ultraviolet (UV) radiation, electron-beam curing, infrared, or high-frequency energy. The most diffused nonconventional inks and lacquers are ultraviolet curing products, and they permit applications of virtually solvent-free "wet" coatings by conventional means. It requires the use of specially selected materials amenable to this form of polymerization, which demand care in storage and handling and complete polymerization, in the interest of health and safety. Its attraction lies in the absence of solvents in difficult environmental situations and extremely short curing times coupled with relatively low energy demand. It is thus used for high-speed operations or where space is limited, as for instance between two or more print color applications ("Interdeck Drying").

Powder Coating. When resins are applied "dry" in the form of fine powder, powder coating is directed in many cases by creating an electrostatic field, which charges the powder particles on the negative pole for being deposited by the positive pole; the latter is the element of the can, or the entire can body, which has to be powder coated. In three-piece canmaking, it is specifically the weld and the weld margin (lacquer-free) area that are coated. The absence of solvents avoids the otherwise excessive cost of drying and eliminates the eventual blistering caused by trapped solvents, which cause porosity or boiling off, because solvent-based lacquers are applied on too-hot welds. Curing, which is a simple fusion of the applied powder layer, is usually done by infrared radiation or high-frequency induction heating, as hot convected air could disturb the uncured coating. In many cases, the same curing ovens are used for powders as well as for lacquers. Only their length is different, as curing of the different, products used for side-seam striping need m ore or less curing time: polyester powder, 8 s; epoxy powders, 10 s; airspray lacquers, 12 s; airless sprayed lacquers, 14 s; and roller coated lacquers, 17 s. In case both powder or lacquer have to be applied, the oven length should fit the longer curing time. *Electrophoretic deposition* provides a means for electrically depositing a resin film on a metallic substrate from an acqueous suspension (13). Originally used at low speed for protecting automobile bodies, it has now been developed to be applied at can production speeds with practicable voltage and current demands. Two-piece and three-piece cans are currently coated on high production lines on both inside- and/or outside of the bodies. Decorated cans of either type can be washed, without affecting the prints, and inside coated in the most positive way. A system of process cells is described in Refs. (14) and (15).

It must be stressed that for food and drink cans, only the anodic system is applicable. Compared with spray application, it gives a more even distribution of coating over the full can wall and base, providing a saving of the quantity used without sacrificing the required minimum coating thickness. Its throwing power enables it to coat regions inaccessible to spray, which is useful for the severe profiles that have to be used to obtain adequate container strength with a thin plate. The system provides practically pore-free films, and practically near-to-zero milliampere current permeability tests are obtained, even when particularly severe tests are applied. Electrodeposition was initially used (American Can Co.) to repair-coat converted Easy Open ends, thus protecting scores, rivets, and cut edges of the tabs, as well as other possible damages to the roller-coated lacquer film applied prior to stamping shells and converting. This equipment is available on the market as an improved version, which is offered by CORIMA in Tresigallo/Italy.The *thermal transfer* of the complete design from printed paper to a plain coating on the can provides a method of obtaining a high-quality decoration in two-piece cans if the extra cost is justified (16). It is used in the Uunited Kingdom under the trade name Reprotherm (Metal Box Ltd.) for promotional designs or single-service beer cans.

COATING EQUIPMENT

Offset Coating. Offset coating is based on the offset printing principle, whereby a metered quantity of coating is applied to a rubber or polyurethane covered roller, to be transferred therefrom to the metal substrate (see Figure 14). In roll coating, metering is accomplished by a series of steel or rubber rollers that pick up the coating from a trough and ensure even distribution and weight control through a combination of relative surface speed and the pressure or gaps between them. Another method called gravure coating employs a pattern of cavities etched into a steel roll, which are filled as the roll dips into a trough. The excess is removed, and the precise amount filling the cavities is then given up to the transfer roll for offset application onto the metal substrate.

Rotary Screen Lacquering. A third method is a development that uses the old established principles of silk-screen printing. The screen is in the form of a cylindrical thin, narrow meshed sieve like metallic screen that is fed internally with the coating material, which is forced through the screen by an internal doctor blade onto the transfer roll. Several patterns govern the shape (cutting diagrams for blanks and/or ends) and weight of the applied coating by photomechanic methods.

Roll Coating. This method is the most common for coating in the flat, which is used for both coil and sheets. In sheet coating, it is possible to cut a pattern (stencil) into the transfer roll (which would be the blanket cylinder on an offset press) and coat only the areas to be used for blanks. In a large-scale operation, this could yield significant savings in material, but it requires the sheet to be accurately registered with the transfer roll. Most of the present-day coaters are provided with front lays that

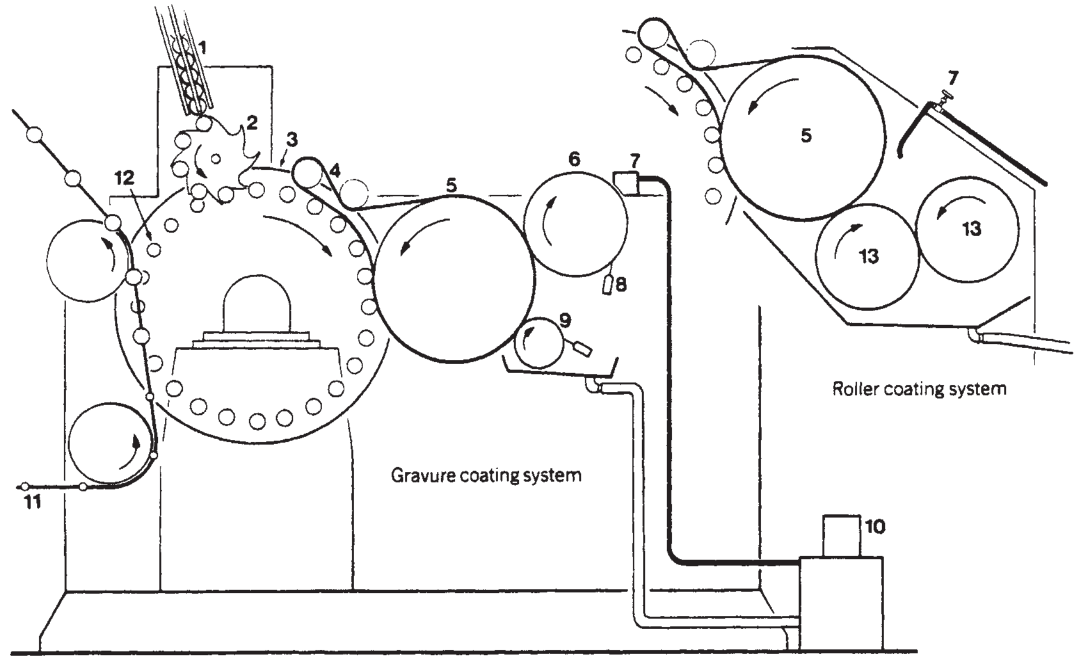

Figure 14. Offset coating, showing application to two-piece can bodies. 1, Body infeed; 2, star wheel; 3, mandrel wheel; 4, prespin; 5, offset cylinder; 6, gravure roll; 7, coating material feed; 8, doctor blade; 9, stabilizer roll; 10, coating material tank, with pump; 11, oven pin chain; 12, mandrel; and 13, metering rolls.

ensure precise registering, and magnetic or vacuum cylinders avoid irregular travel of the sheets while being transferred by the pressure contact between the transfer roll and the compression cylinder.

Rotary-screen coating permits a better definition of the pattern in the applicator itself without cutting (or stenciling) the transfer roll, which leaves a sharper, cleaner edge between coated and uncoated areas. Other advantages claimed are the ability to apply double the coating, which could possibly save one pass, i.e., the coating operation and curing, as well as applying differential coating weights on adjacent areas of the sheet or on individually coated spots. Thus, the coating pattern can be identical to an end-cutting diagram whereon all geometrical losses (shreds and skeleton) remain uncoated. In this way, the flange area of any end that receives the sealing compound can receive a low-weight lacquer film, whereas the curl portion can remain totally unlacquered. There is a twofold advantage: water-based compound adheres better on uncoated endstock, and the blank cut in the end-stamping press is made on a lacquer-free area. Cured resins, especially when they “feather,” act as emery in end tools, adhere to the tool parts, and scratch other ends, which causes downtime for cleaning. The uncoated curl area is covered by compound, at least to 1/64 in. from the cut edge of the end and does therefore disappear in the double-seam end hook.

Roller coating is similarly used, although in reduced dimensions as compared with sheet coaters, for the outside of two-piece cans. For this application, however, the more precise method of gravure coating is gaining favor. Decorators operate in a similar fashion (17) but are considerably more complicated, because they apply four, and sometimes up to six colors with extreme accuracy of registration to build up the total picture. Thus, a can decorator uses the same can-handling system as the coater, replacing the coating head by a reduced size offset press printing equipment for each color, all of them four to six colors, transferred onto one and the same blanket cylinder, which transfers the total label onto the can envelope in one rotation of the can. Cans (in the same way as collapsible tubes) are stripped from the printing mandrels and are transferred onto the pins of the pin oven chain for curing.

Spraying. The method normally employed is the airless spray system, where atomization of the enamel into fine droplets of appropriate size is achieved by the use of high pressure on the enamel, about 650–850 psi (45–60 kg/cm^2). A spray gun consists of a spray nozzle designed to give the desired spray pattern, a needle valve to cut off the flow without dripping, and the means to activate the valve at high speeds, usually a solenoid.

Because the viscosity of the enamel has a decisive influence on the spray pattern, discharged quantity and dripping, it is heated and continuously circulated through the gun. The quantity of lacquer deposited in the can is determined by precise timing of the valve. A typical spray time is approximately 100 ms. In modern practice, the gun is at a fixed position at the mouth of the can, although machinery exists for moving it axially inside the can during spraying. This is called a lancing gun. The can is indexed to a position in front of the gun and rotated at about 2000 rpm to ensure an adequate number of rotations while spraying is in progress. It is practically compulsory to keep rotating the can on its way from the spray coater to the oven to assist flow out (extension and full wetting for poreless film formation and avoid rundown) and even distribution. The pattern of coverage and number of coats depend on the type of product to be packed (beer or carbonated soft drinks), the can material (steel or aluminum), and the can size (h/d ratio). Coverage can be total, where one spray covers the total area, or zonal, where one spray is directed towards the base and lower side wall of the can, and a second one covering the upper side wall of the can up to its open end. Two coats may be applied in consecutive indexing stations on the same machine (wet on wet) or in separate machines with intermediate drying (wet on dry).

Internal Side-Seam Protection for Welded Cans. The bare metal that exists in the weld area must be protected in many cases. Roller coating, spray, and electrostatic powder coating are used. The applicator is mounted on an extension of the welding arm through which the coating material is supplied from a connection fitted before the can cylinder is formed around it. Roller coating permits a low-pressure fluid supply, but the lack of space makes the applicator components extremely small as they must be contained inside the sometimes small internal can diameter, i.e., 202 cans. Spray application requires a high-pressure fluid supply. Although good initial coverage can be achieved, liquid enamel tends to retract from sharp edges and cause eventual "splashes," so that high application weights are needed for adequate coverage of the cut edge of the blank. The overspray, which escapes from the gaps between the cans, poses exhaust problems, especially in avoiding external contamination through drips. Powder is fluidized with air for conveyance through the welding arm and electrostatically charged to achieve deposition on the welded area. This method undoubtedly provides the best protection, but it is expensive in material and must be run carefully in production. Wherever epoxy powders can be applied instead of polyester ones, the material cost is substantially reduced.

BIBLIOGRAPHY

1. Brit. Pat. 621,629 (June 16, 1949), J. Keller.
2. U.S. Pat. 760,921 (May 24, 1904), J. J. Rigby (to E. W. Bliss Company).
3. U.S. Pat. 2,355,079 (Aug. 8, 1944), L. L. Jones (to American Can Company).
4. Brit. Pat. 1,574,421 (Sept. 10, 1980), J. T. Franek and E. W. Morgan (to Metal Box Ltd.).
5. Brit. Pat. 910,206 (Nov. 14, 1962), Soudronic AG.
6. Fr. Pat. 2,338,766 (Aug. 19,1977), E. E. V. V. Saurin and E. V. Gariglio.
7. Brit. Pat. 1,256,044 (Dec. 12, 1971), E. Paramonoff and H. Dunkin (to Standun Inc.).
8. U.S. Pat. 3,270,544 (Sept. 6, 1966), E. G. Maeder and G. Kraus (to Reynolds Metals Company).
9. U.S. Pat. 3,704,619 (Dec. 5, 1972), E. Paramonoff (to Standun Inc.).
10. Brit. Pat. 1,534,716 (Dec. 6, 1978), J. T. Franek and P. H. Doncaster (to Metal Box Ltd).
11. Brit. Pat. 2,083,382B (Mar. 24, 1982), J. B. Abbott and E. O. Kohn (to Metal Box Ltd.).
12. Brit. Pat. 1,509,905 (May 4, 1978), J. T. Franek and P. Porucznik (to Metal Box Ltd.).
13. Brit. Pat. 455, 810 (Oct. 28, 1936), C. G. Sumner, W. Clayton, G. F. Morse, and R. I. Johnson (to Crosse & Blackwell Ltd.).
14. U.S. Pat. 3,922,213 (Nov. 25, 1975), D. A. Smith, S. C. Smith, and J. J. Davidson (to Aluminum Company of America).
15. Brit. Pat. 1,604,035 (Dec. 2, 1981), T. P. Murphy, G. Bell, and F. Fidler (to Metal Box Ltd.).
16. Brit. Pat. 2,101,530A (Jan. 19, 1983), L. A. Jenkins and T. A. Turner (to Metal Box Ltd.).
17. Brit. Pat. 1,468,904 (Mar. 30, 1977), (to Van Vlaanderen Container Machinery Inc.).

General References

A. L. Stuchbery, "Engineering and Canmaking," *Proceedings of the Institution of Mechanical Engineers*, **180**, 1, 167–1193 (1965–1966).

J. T. Winship, *Am. Machinist*, Special Rep. No. 721, 155 (Apr. 1980). Explains how metal containers are made.

The Metal Can, Open University, Milton Keynes, UK 1979, 52 pp.

C. Langewis, Technical Paper MF80–908, Society of Manufacturing Engineers, Detroit, MI, 1980.

E. Morgan, *Tinplate and Modern Canmaking Technology*, Pergamon Press, London, UK, 1985. Contains a broad summary of printing processes.

W. A. H. Collier in *Proceedings of Cold Processing of Steel*, The Iron and Steel Institute and the Staffordshire Iron and Steel Institute, Bilston, UK, Oct. 1971 and Mar. 1972, pp. 70–77. Describes drawing, forming, and joining of steel containers.

J. D. Mastrovich, *Lubrication* **61**, 17 (Apr./June 1975). Describes aluminum can manufacture.

Proceedings of 1st International Tinplate Conference, International Tin Research Council, London, Oct. 1976. Full set of papers and discussions issued in book form which provide the best source of reference for can-making technology. Papers include: G. F. Norman, "Welding of Tinplate Containers—An Alternative to Soldering," Paper 20, pp. 239–248; J. Siewert and M. Sodeik, "Seamless Food Cans Made of Tinplate," Paper 13, pp. 154–164; and W. Panknin, "Principles of Drawing and Wall Ironing for the Manufacture of Two-Piece Tinplate Cans," Paper 17, pp. 200–214.

Proceedings of 2nd International Tinplate Conference, International Tin Research Council, London, Oct. 1980. Papers include G. Schaerer, "Food and Beverage Can Manufacture," Paper 17, pp. 176–186.

Proceedings of 3rd International Tinplate Conference, International Tin Research Council, London, Oct. 1984. Papers include W. Panknin, "New Developments in Welding Can Bodies;" G. Schaerer, "Soudronic Welding Techniques—A Promoter for the Tinplate Container;" and R. Pearson, "Side Seam Protection of Welded Cans."

Developments in the Drawing of Metals, Conference organized by The Metals Society, London, UK, May 1983. Section on deep drawing and stretch forming, pp. 76–125. Papers include P. D. C. Roges and G. Rothwell, "DWI Canmaking: The Effect of Tinplate and Aluminum Properties," E. O. Kohn, "The Use of Spinning for Re-forming Ultra-thin Walled Tubular Containers;" and three papers on aspects of deep drawing.

A. M. Coles and C. J. Evans, *Tin and Its Uses*, International Tin Research Institute, Hertfordshire, UK, No. 139, 1984, pp. 1–5.

F. L. Church, *Mod. Metals* **37**, 18 (July 1981).

N. T. Williams, D. E. Thomas, and K. Wood, *Metal Constr.* **9**, 157 (Apr. 1977); **9**, 202 (May 1977).

A. G. Maeder, *Aerosol Age* **18**, 12 (Nov. 1973). Still the best first introduction to the subject.

D. Campion, *Sheet Metal Ind.* **57**, 111 (Feb. 1980); **57**, 330 (Apr. 1980); **57**, 563 (June 1980); **57**, 830 (Sept. 1980).

S. Karpel, *Tin Int.* **54**, 208 (June 1981).

Metal Decorating and Coating, Annual Convention of National Metal Decorators Association (NMDA), October, annual. Reviewed in *Modern Metals*.

E. A. Gamble, *J. Oil Colour Chem.* **10**, 283 (1983).

METALLIZING, VACUUM

Robert Bakish
Bakish Materials Corporation,
Englewood, New Jersey

INTRODUCTION

Vacuum metallizing, which is a physical vapor-deposition (PVD) process, produces coatings by thermal evaporation of metals under conditions that permit and enhance this deposition on a wide range of substrates. It is a process for the manufacture of a great variety of products, which include a diversity of polymeric webs of interest to the packaging industry.

The key here is the thermal evaporation of metals. Changes in needs and demand for new products have also led to the application of this process for coating of these webs with a variety of ceramics.

The control of the evaporation process and the evaporant depends on the thermal source, the properties of the evaporant, the vessel from which one evaporates, the manner of holding and supplying of the evaporant, and last but not least, the prevailing process pressure and/or environment.

In the equipment where this coating is performed, i.e., the vacuum metallizers, variables such as geometry, distance between the evaporant source and web, and presence or absence of chill rolls, which is a system component that determines the substrate temperature and coating velocity, all affect the properties of the coating.

Although sputter technology, which is another PVD process, could also be considered and in fact is a vacuum metallizing process, it is not referred to here. The process is considerably slower, and its high costs truly eliminate it from consideration in production of coatings for the packaging industry that this encyclopedia serves.

THERMAL SOURCES

Today, three basic heat sources are used in vacuum metallizing: resistance heating, induction heating, and electron-beam heating.

Resistance Heating. Source development began with resistance heating using refractory metals. The successful resistance source is an electrical conductor with resistivity that allows it to reach the evaporation temperature with reasonable current flow. This material must have a higher melting point and lower vapor pressure than the evaporant. It also must be chemically inert to the evaporant, and it certainly should not form by-products that could degrade the properties of the films produced. The source should be so designed to be able to contain the evaporant. The ease of handling and advantageous cost should also be integral characteristics of this source. The refractory metals—tungsten, molybdenum, and tantalum—have these characteristics, although tungsten is by far the preferred source. A range of configurations for braided wires to refractory metal boat sources is to be found in service. Usually when complexly shaped containers are needed, one will use tantalum. Resistance-heated wire sources and refractory metal boats sources are shown in Figure 1 (1). The refractory metal resistance source remains in use in small installations, but when we speak of industrial applications, the intermetallic boat is now the mainstay. Initial success with resistance-heated ceramic boats were recorded in the 1960s (2).

Let us now look at these. Boron nitride (3) with a filler of aluminum nitride, which permits the materials to be shaped in virtually any desired shape, seems to have wide acceptance for boats. This material has zero resistance when cold and an increasing resistance as the temperature increases.

As a result, sophisticated controls of the heat input are needed for these boats. Three-phase boats that consist of boron nitride, aluminum nitride, and titanium diborate are also used. Here, the A1N is added for its thermal conductivity and electrical resistivity properties. These boats operate at voltages of the order of 20 V with programmable current input that limits the power to the boat when it is cold to avoid cracking. There is a variety of ideas for the most efficient way to power the boats; two of these are shown in Figure 2 (4). Figure 2(a), which shows a

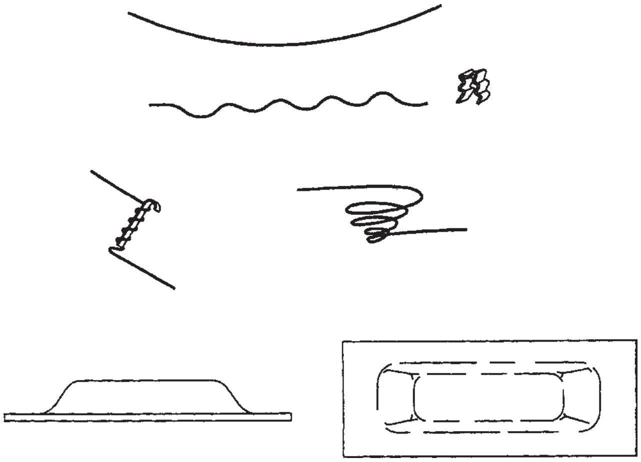

Figure 1. Resistance-heated wire sources (*top*); refractory metal boat source (*bottom*).

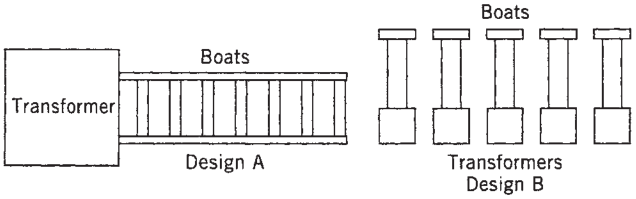

Figure 2. Two modes of powering resistance boats.

system where a single transformer is used to power all boats, has two main disadvantages. The first is that there is a voltage drop from the first to the last boat, which makes it virtually impossible to control the individual boats. The alternative approach, which is shown in Figure 2(b), is the more common and preferred method used. It permits individual boat control, which makes possible setting of uniform heating despite resistivity changes caused by aging of the boats.

In addition, the design of boats clamping must be properly engineered to permit good electrical contact and avoid mechanical stresses caused by thermal expansion. Various designs are possible. The size of the evaporation boats is dependent on the individual machine, and a wide range of opinions are related to boat size. Boats are habitually wire fed with a wide variety of feed drives to be found in the field. Overall resistance heating is rapid and provides efficient deposition rates. This source also has lower outgassing rate. The choice of boat material is determined for each installation based on machine parameters, operation experiences, and end-product requirements. Boat life varies extensively. Table 1 (5) shows some of the factors that influence it.

Induction Heating. Induction heating is the second heat source used here. Although in the past it used to be a very popular source, it seems that U.S. and European producers of metallizers have abandoned it in favor of resistance heating. Their reason for the move in this direction was their feeling, based on experience, that this source was difficult to operate, that it could not be feed continuously, and that it had unfavorable economics.

By contrast, it seems that ULVAC, the premiere Japanese metallizing equipment producer, has remained loyal to induction heating (6) for its metallizers. ULVAC feels strongly about it, listing the advantages in Table 2 (7).

Table 1. Some Factors Influencing Boat Life

Electrical contact[a]
Initial heating[a]
Initial wetting of the cavity[a]
Operating temperature[a]
Utilization of cavity area[a]
Vacuum level
Number of cycles (length of rolls)
Purity of aluminum wire
Correct resistivity
Age of unused boats
Cooling of boats[a]
Boat defects

[a] Operator controllable.

Table 2. Advantages of Induction Heating

Constant evaporation rate
Stable control on thickness uniformity using multiple evaporation source
No splaches; pinhole-free film can be coated
Automatic control of evaporation rate is easy and simple to operate
Aluminum purity can be 3N, instead of 4N or 5N
Aluminum blocks used can be easily available (10–300 g/piece)
Cheap running cost of evaporation source
Crucible life is long, and can be used for more than 40 batches
Simple evaporation source mechanism
Dense evaporated film structure
Higher yield of evaporation source: 95–98% for crucible and 90–93% for boat

Electron-Beam Heating. In electron-beam heating, the heat generated is a result of an energy conversion process. Here, the kinetic energy of the highly accelerated electrons is converted to heat on impact with the workplace. The *electron gun* is a device that generates electrons and, after columniating them, directs them to the workplace. Electron-beam heating has no upper limit, which makes it possible to evaporate virtually any material. Today, transverse and axial electron guns are to be found in metallizing systems. The transverse guns generate the electron beam, and after a 270° bending direct it to the workpiece. The reason for this path is mandated by the need to maintain the area where the electrons are generated free of the high-density material vapors that habitually are found on top of the evaporant and that can and will defocus the beam reducing its efficiency. The axial guns generate the beam and axially directs them to the workpiece.

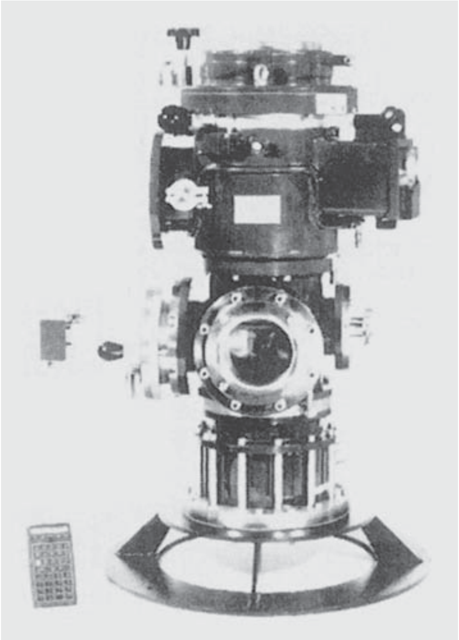

Figure 3. A 100-kW von Ardenne Anlagentechnik gun and parameters.

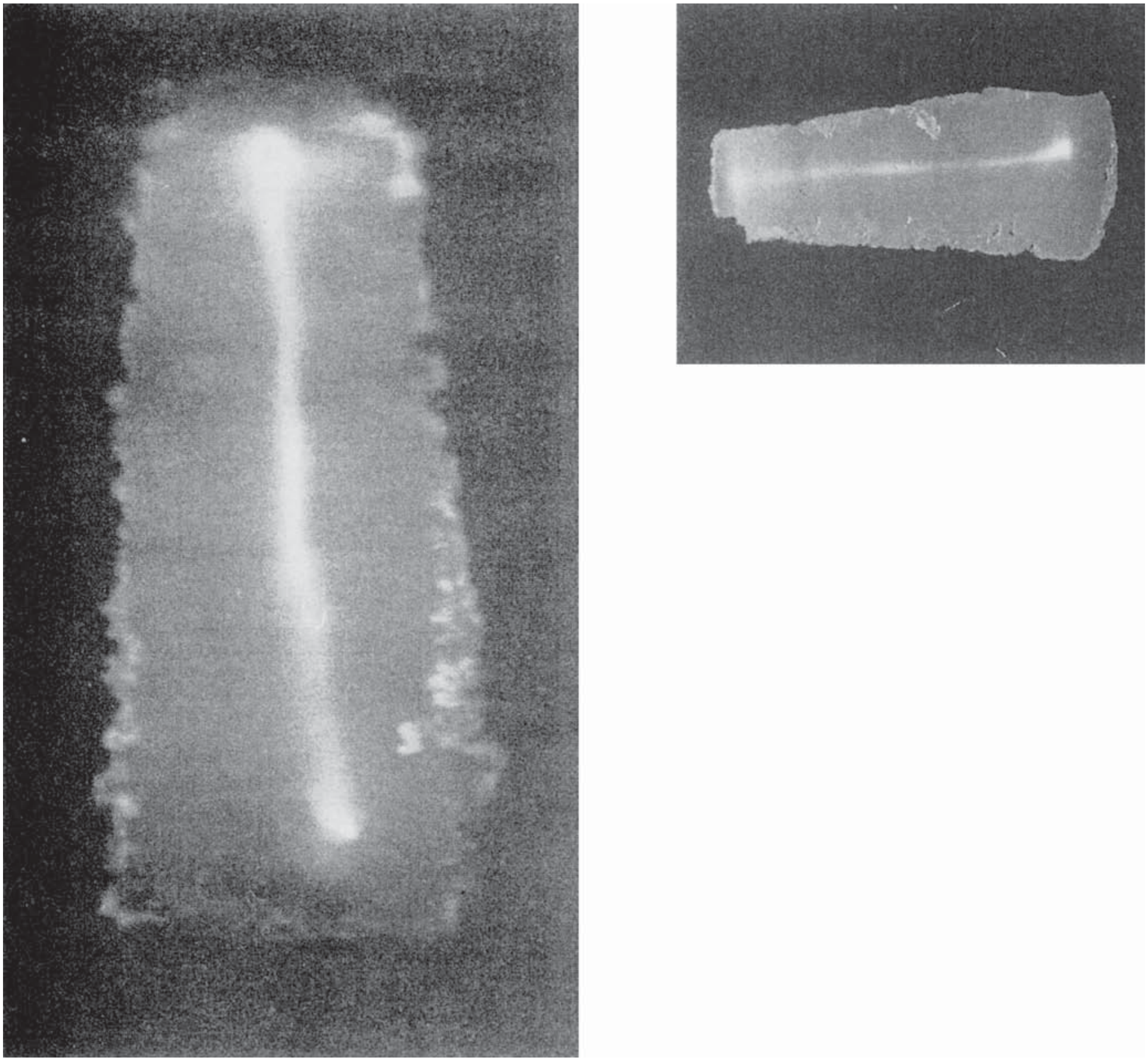

Figure 4. Evaporation line of an electron-beam line evaporator for 1000-mm web width.

With these guns, the beam is magnetically deflected to effect desired coverage of the evaporant filled crucible. A typical axial gun is given in Figure 3. It can produce a beam that, by suitable deflection, can cover the crucible containing the evaporant with virtually any desired configuration. This includes the beam in a line configuration that was first introduced in 1984 (8), which makes possible the generation of a uniform vapor curtain (see Figure 4).

When using electron-beam heating, one must ensure that virtually no secondary electrons impinge on the polymeric web; unless this is accomplished, their thermal load will lead to severe damage and even complete destruction of the web. Figure 5 shows 1000-mm crucible and magnetic trap for an electron-beam line evaporator in a roll-coating plant. Note, in electron-beam heating, that the evaporant, depending on its nature, is evaporated either from a cold crucible (i.e., water-cooled copper) or from a hot crucible vessel that can be made of a variety of ceramic materials. The specific selection is based on compatibility with evaporant. Table 3 shows a theoretical comparison between resistance and electron-beam heating for aluminum coating (9). As you can observe from this table, the electron-beam heating, although more expensive, is notably simpler.

From the heat sources, only electron-beam heating can be used for direct evaporation of ceramics. The electron beam can also be used for a deposition process referred to as plasma-activated reactive evaporation of aluminum (10). The geometry of the process is shown in Figure 6 (10). This process can be carried out equally well with a resistance-heated boat evaporator. Table 4 (10) shows maximum rates obtained by reactive evaporation. We

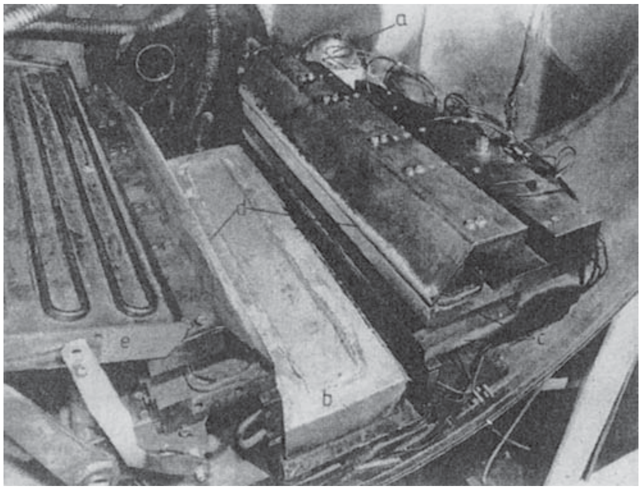

Figure 5. 1000-mm crucible and magnetic traps in a roll-coating plant.

are likely to observe considerably more reactive evaporation applications in the future. Reference should also be made to Table 5 for the advantages and limitations of the electron-beam evaporation (11).

METALLIZING EQUIPMENT

As with equipment to carry out any other process, so with metallizing equipment the details of the system are governed by the process to be used, and the product that it must produce. Once details are fixed, the ability to carry out the process in the system depends on the competence and the skill of the equipment producer. By saying this, one could say that the estimated 500 metallizers operating in the world today are, in fact, 500 different pieces of equipment. The estimate of their production is given in Figure 7 (12). Although in the true sense of the word this might be correct, I will only refer to a few typical systems. The metallizers, or roll coaters, if you will, accomplish a wide range of tasks far and beyond the needs of the packaging industry, which is the largest consumer of

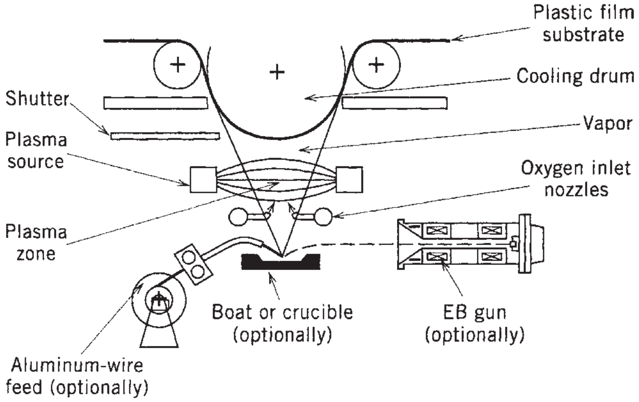

Figure 6. Schematic of the aluminum oxide deposition process by plasma-activated reactive evaporation of aluminum.

Table 3. Comparative Theoretical Evaluations between EB and Resistance Heating

General assumptions			
1000-mm coating width			
400-A Al layer			
10-ms^{-1} coating speed			
12-μm PET			
645/1000-mm roll diameter			
3-shift operation			
85% machine availability			
		Resistance-heated boats	EB
Cost calculation basis			
Number of boats/crucible		11	1
Price per boat ($)		35	400
Boat/crucible lifetime (h)		17	100
Pumpdown time/conditioning (min)		5	20 (15)[a]
Vent time (min)		5	20 (5)[a]
Investment costs (percent)		100	112 (120)[a]
	Resistance-heated boats	EB	EB with crucible lock chamber
Coating profitability		645-mm roll diameter	
Annual productivity (tons/yr)	1502	1141	1402
Coating costs ($/kg)	0.47	0.62[2]	0.53[b]
		0.57[3]	0.50[c]
		1000-mm roll diameter	
Annual productivity (tons/yr)	2093	1799	2036
Coating costs ($/kg)	0.37	0.45[b]	0.43[b]
		0.40[c]	0.38[c]

[a] With crucible lock chamber.

[b] EB evaporator with 50% higher Al consumption.

[c] EB evaporator with same Al efficiency as intermetallic boats. The calculation shows that in case of aluminum coating of PET, the EB-coating costs are definitely higher mainly because the inherently higher possible evaporation speed of the EB evaporator cannot be used.

Table 4. Maximum Evaporation Rates and Theoretically Derived Deposition Rates for Reactive Aluminum Evaporation[a]

		Boat Evaporator		
		per 100 mm (1 boat)	per 1000 mm (10 boats)	EB Line Evaporator per 1000 mm
Maximum evaporation rate (Al)	$\frac{g}{min}$	12 (cavity 30 cm^2)	120	≈200
Derived deposition rate (Al)	$\frac{nm}{s}$	2400 (200 nm/s per 1 g/min)	2400	≈4000
Derived deposition rate (Al_2O_3)	$\frac{nm}{s}$	75%–150% of Al deposition rate depending on the location of O_2 inlet		
Limitation for Al evaporation rate		Size of boats (max. 0.4 g/min per cm^2 cavity)	Number of boats per 1000 mm (10 boats per row)	Splashing (max. 2 g/min per cm^2)

[a] *Precondition:* No other limitation for deposition rate.

Table 5. Advantages and Limitations of EB Evaporation

Advantages	Limitations
High deposition rates for metals and dielectrics	Low source efficiency Multisource control
Direct deposition of oxides, fluorides, sulfides, and magnetic materials	Source inventory Thermal load to substrate
Coating material change over flexibility	Source orientation

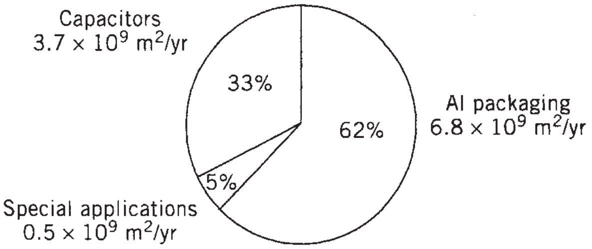

Figure 7. Estimates of worldwide 1993 metallizing production capacity.

polymer films coated with aluminum. It is thus appropriate to refer to Table 6 (13), which refers to most, if not all, products that can be made in metallizers. However, many of these are actually products of sputter technology.

Increased productivity and lower costs have been the engine driving this technology since its introduction. They have been responsible for (a) the widening of the metallizers, with ability to coat today's widths, exceeding 125 in.; (b) the increases in coating speed, today getting ready to exceed 3000 ft/min; and (c) numerous quantum leaps from the manual controls of yesterday, to fully computer-controlled systems of today (14), including the use of artificial intelligence (AI) techniques to provide real-time process control and troubleshooting advice (15).

Let us now look at schematics of few of the large variety of web coaters built over the years for the purpose of illustrating the equipment that operates in industry. Figure 8 (16) shows a cross section of a coater representing smaller type machines. In this schematic, electron-beam heating is indicated, although resistance heating for such systems is much more common. Figure 9 (17) shows a schematic of a coater, and Figure 10 (17) show its internal rolls assembly; note both electron-beam- and induction-heated sources. Figures 11 (18) and 12 (19) show cross sections typical of a high-speed, large machine. All these

Table 6. Present and Future Applications of Roll Coaters

Application	Products
Gold and silver yarns	Obi(sash), sash clip, bag, tie, sandals, curtain, towel, shawl, socks, slippers, embroidery, table cloth, lace, stage costome, tatami brim, etc.
Ornaments	Interior decorations, Christmas-tree decorations, nameplate, case, ballom, cosmetic package, etc.
Stamp foils	Pencil, book cover, postcard, label, Christmas card, poster, cigarette package, picture frame, lighter, cassete case, kimono, kimono sash, etc.
Packages	Medicines, confectionary, rice, cigarette, food, etc.
Building materials	Parasol, sunshade, greenhouse shade, interior wall, heat-insulation wall, solar film, firefighter's suite, curtain, space suit, etc.
Farming materials	Reflective sheet, beach mat, cooler bag, scarecrow, etc.
Reflection sheet	Traffic sign, number plate, mirror, guidance sign (airplane), etc.
Food package	Lunchbox, tableware, etc.
High added value products	Magnetic tape, copying film (substitute of copy drum), aerial photograph film, optical filter, multilayer flexible circuit board with polyimide, etc.
Precision capacitor	Logic circuit (communication device, personal computers, etc); bypass capacitor (TV, radio, VCR, etc).
Phase advance capacitors	High industrial power unit, etc; low power—washing machine, motor, Pachinko machine, home bakery, fluorescent lamp.

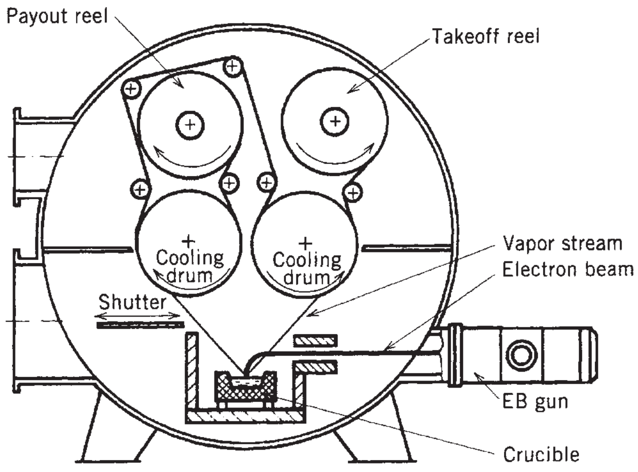

Figure 8. Outline of a vacuum roll coater typical of smaller machines.

are referred to as *batch* or *semicontinuous coaters*. The production cycle of these machines habitually consists of four steps as follows: (a) precoating, (pumpdown), (b) coating, (c) venting, and (d) recharging. These steps vary from machine to machine. Figure 13 (20) shows an example of such a cycle. One could look at it as somewhat representative of batch systems. However, one should note that there is considerable variation in the production cycle from machine to machine.

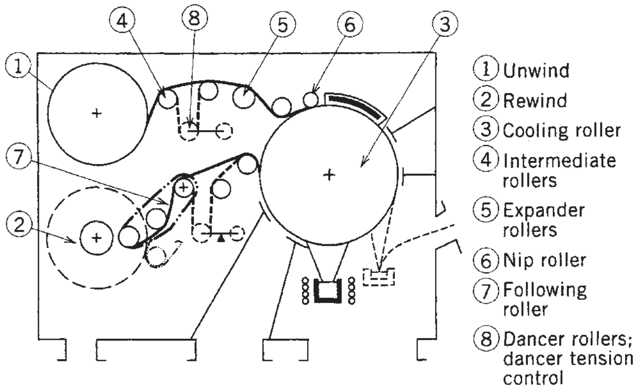

Figure 10. Internal roll assembly of water shown in Figure 9.

To increase productivity, air-to-air machines have been built. The producer of one of these (21) claims that output here can be increased up to 50% in relation to a batch-type machine. Figures 14 (20) and 15 (21) show schematics of air-to-air metallizers. The costs of the equipment, however, are notably increased. Although a limited number of air-to-air machines serve the packaging field, this type of installation remains primarily the province of metal strip coaters. To round up the discussion on metallizers, one should examine a couple of 1995 vintage systems serving the packaging and related industries. Figure 16 (*left*—machine; *right*—schematic) shows the Leybold

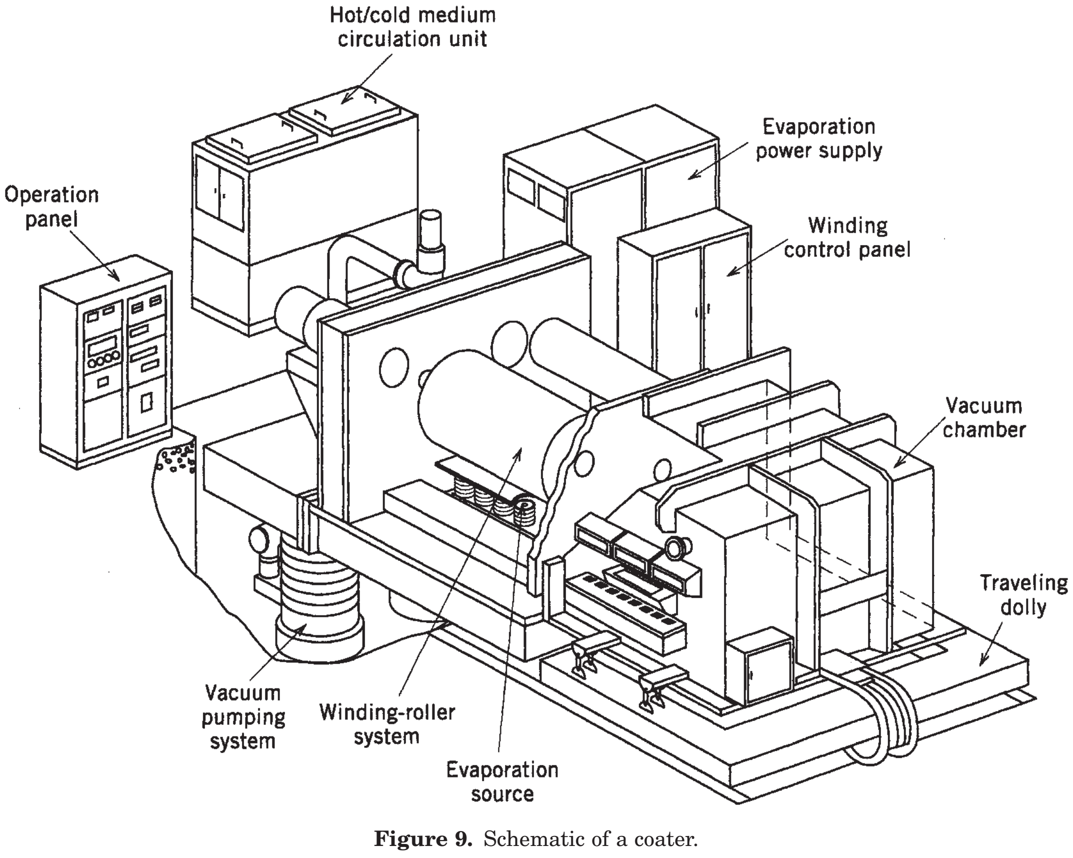

Figure 9. Schematic of a coater.

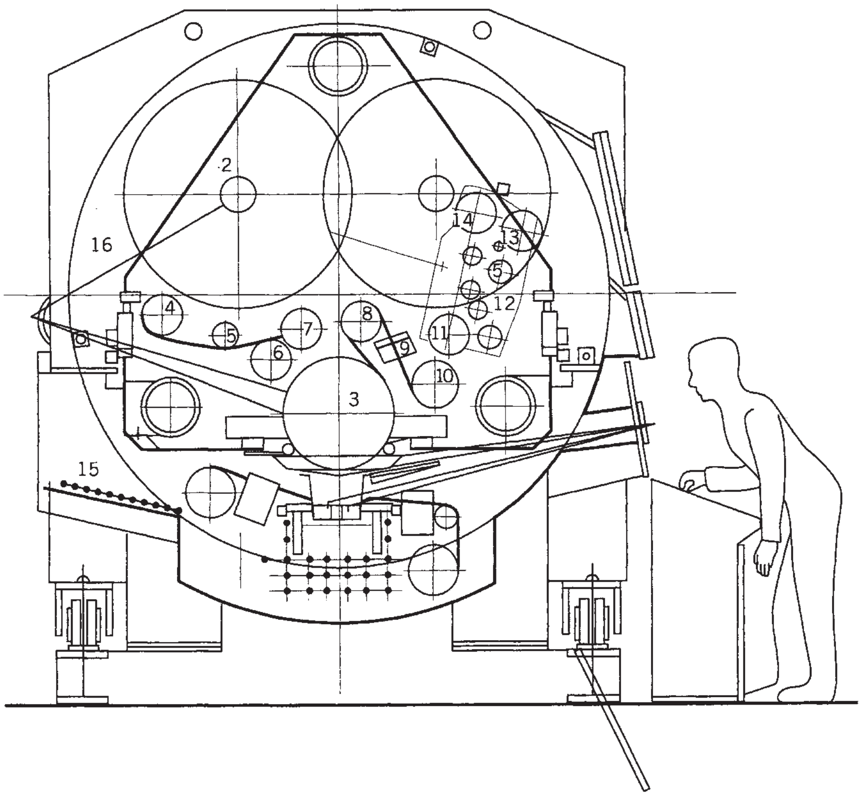

Figure 11. Cross section of a typical high-speed large machine.

electron-beam-powered "top beam" 2-m-wide coater for the packaging industry, whereas Figure 17 shows the resistance-powered "mega" 3-m-wide Galileo metallizer.

One can examine the equipment discussed above as the classic metallizing equipment. Efforts to develop competitively priced transparent barrier coatings, in progress for some time, are continuing. With minor exceptions, the products developed from these activities to date have yet to make a major impact on the coated products for the packaging market. Numerous reports on this research and development and on specific systems for production of such coatings can be located in the proceedings of the International Vacuum Web Coating Conference beginning in 1987 and those of the Society of Vacuum Coaters beginning in 1986. Many technologies for applying transparent barrier coatings are referred to in these publications. Specifically for coatings of SiOx, one can electron-beam evaporate silica. An alternate way to produce coatings of the same compound is through the reactive evaporation of silicon monoxide. SiO_2 coatings can be

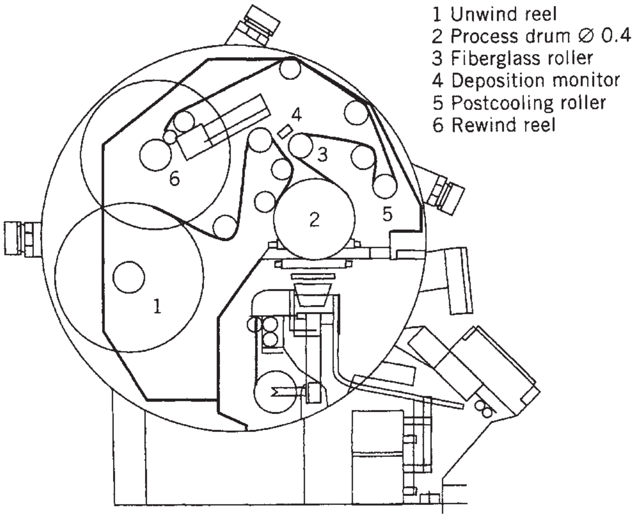

Figure 12. Cross section of a typical high-speed large machine.

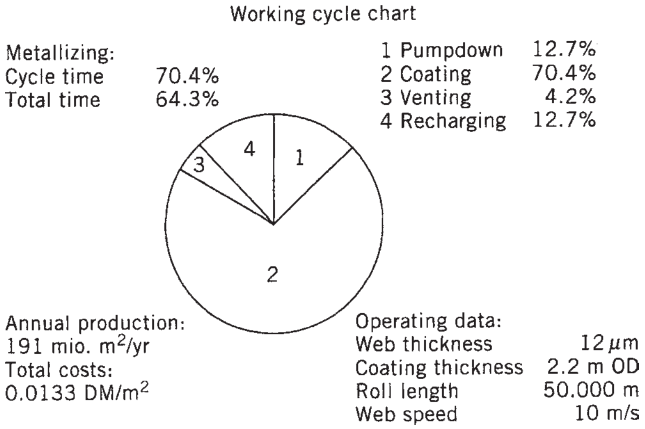

Figure 13. Representative working cycle.

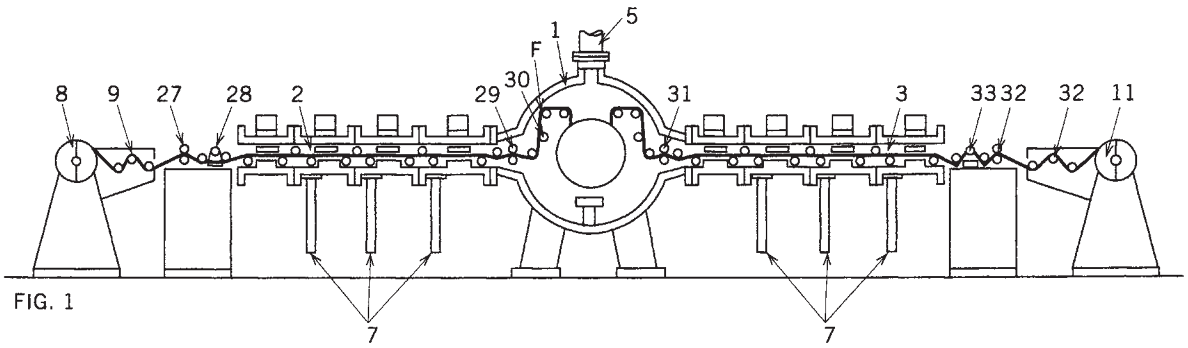

Figure 14. Schematic of a Hitachi air-to-air metallizer.

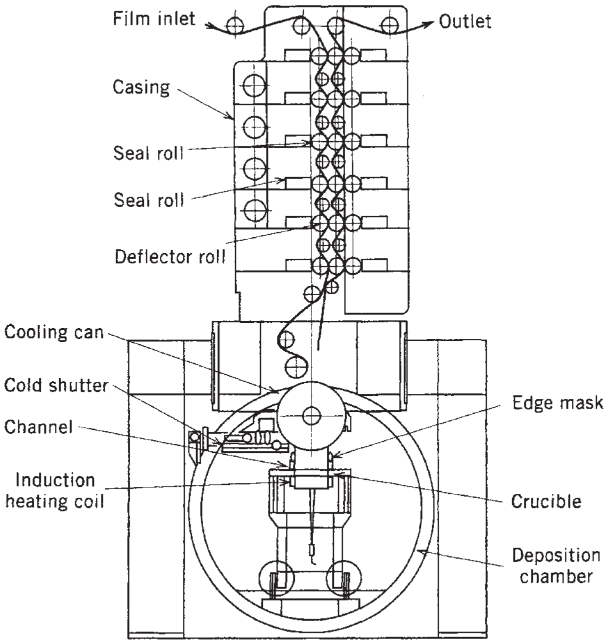

Figure 15. Schematic of an Mitsubishi air-to-air machine.

produced by plasma-enhanced chemical vapor deposition (PECVD) of organosilenes. Al_2O_3 coatings can be produced by anodization of aluminum coatings, which is entirely impractical, and by electron-beam evaporation of Al_2O_3. AlOx coatings can be produced by reactive evaporation of aluminum.

CONCLUSION AND A LOOK AT THE FUTURE

The field of vacuum metallizing serving the packaging industry has been one of steady-state growth. Advances in equipment have lead to price reductions of vacuum-metallized products and an ever-increasing market for these. The last decade has observed tremendous interest and activities in development of transparent barrier coatings. The technology to bring prices of these coated materials to levels acceptable to the packaging industry has prevented real acceptance of these products except in special situations. This effort undoubtly will lead to a breakthrough in the technology that will enable the suppliers to meet the pricing targets of this industry. Only then would transparent-barrier-coated materials begin a real penetration

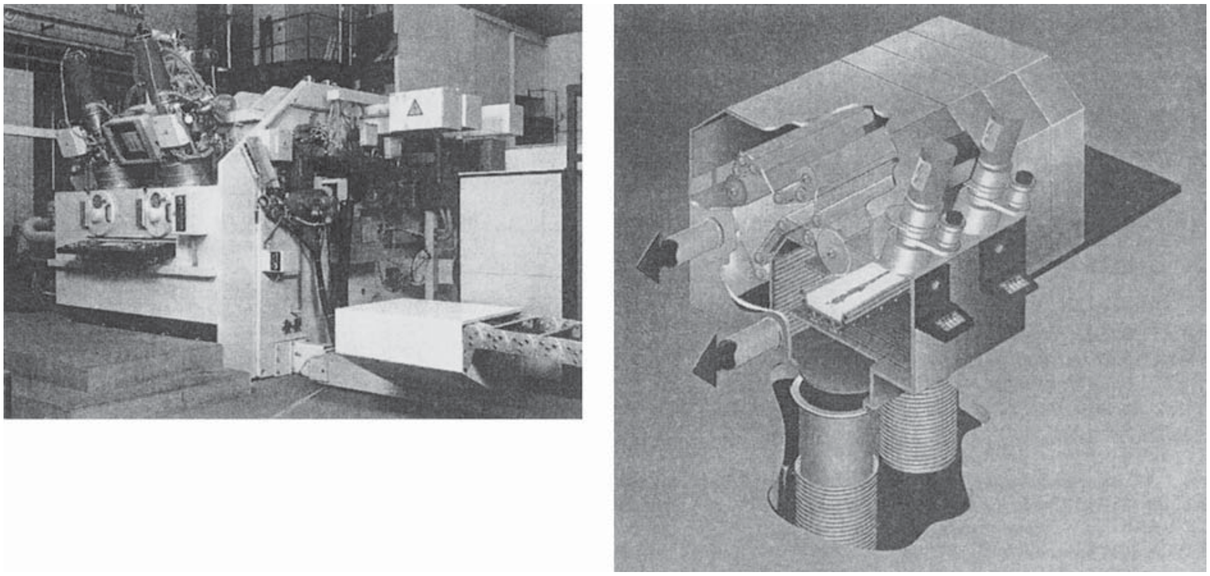

Figure 16. "Top-beam" coater.

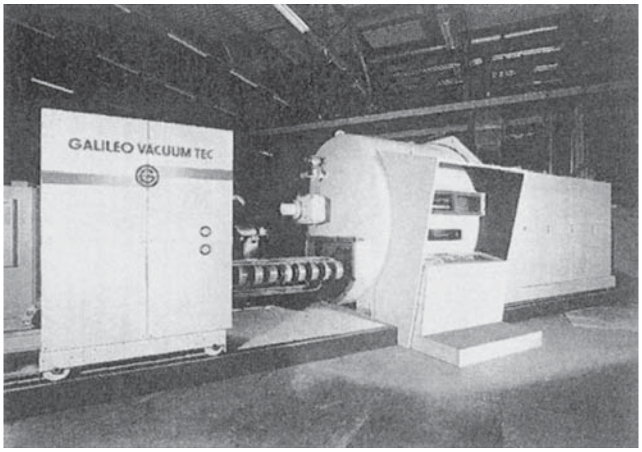

Figure 17. "Mega" line.

in the market dominated by vacuum-metallized aluminum in the packaging industry.

BIBLIOGRAPHY

1. K. M. Anetsberger, "Metallization of Plastics with Resistance Heated Sources" in K. L. Metal and J. R. Susko, eds., *Metallized Plastics*, Plenum Press, New York, 1989, pp. 29–44.
2. H. Zoelner, "Resistance Heated Ceramic Evaporation Boats" in *Proceedings of the 27th Annual SVC Conference*, 1984, pp. 1–4.
3. I. Watts, "20 Years Resistance Source Development" in *Proceedings of the 34th Annual SVC Conference*, 1991, pp. 118–123.
4. F. Casey and A. Bloomfield, "Recent Advances in Source Design in Resistive Evaporation Web Coaters" in *Proceedings of the 34th Annual SVC Conference*, 1991, pp. 120–124.
5. C. Gibson and K. Kohnken, "Intermetallic Evaporation Boats" in R. Bakish ed., *Proceedings of the 3rd International Vacuum Web Coating Conference*, BMC, 1989, pp. 121–130.
6. I. Tada, A. T. Yamamori, K. Mutsumory, and Y. Yoneda, "Comparison of Evaporation Sources for Web Coaters" in *Proceedings of the 32nd SVC Conference*, 1989, pp. 131–149.
7. Y. Toneda, T. Chiba, and O. Ohkubo, "Recent Advances in Vacuum Roll Coating" in *Proceedings of the 30th Annual SVC Conference*, 1987, pp. 105–110.
8. S. Schiller, M. Neumann, and R. Bakish, "Electron Beam Line Evaporators for Roll Coating" in *Proceedings of the 27th Annual SVC Conference*, 1984, pp. 192–210.
9. A. Feuerstein, "Latest Technology High Performance Electron Beams" in *Proceedings of the 29th Annual SVC Conference*, 1986, pp. 118–135.
10. S. Schiller, M. Neumann, H. Morgner, and N. Schiller, "Reactive Aluminum Oxide Coatings of Plastic Films" in *Proceedings of the 38th Annual SVC Conference*, 1995, pp. 18–27.
11. A. S. Matteucci, "Electron Beam Evaporation and Magnetic Sputtering in Roll Coating" in *Proceedings of the 30th Annual SVC Conference*, 1987, pp. 91–104.
12. E. K. Hartwig, "Future of Al Vac Web Coating Considering Environmental Legislation and Non Metallic Vacuum Coating" in R. Bakish, ed., *Proceedings of the 7th International Vacuum Web Coating Conference*, BMC, 1993, pp. 2–10.
13. C. Hayashi, "Advances in Vacuum Roll Coating" in R. Bakish, ed., *Proceedings of the 1st International Vacuum Web Coating Conference*, BMC, 1987, pp. 2–10.
14. C. Beccaria, A. Pasqui, and F. Remedotti, "Integral Computer Control of Roll to Roll Coater" in *Proceedings of the 35th Annual SVC Conference*, 1992, pp. 100–105.
15. I. M. Boswarva, V. Lee, and G. Duchame, "The Use of Artificial Intelligence Techniques to Provide Real Time Process Control and Trouble Shooting Advise in Vacuum Roll Coaster Operations" in R. Bakish, ed., *Proceedings of the 7th International Vacuum Web Coating Conference*, BMC, 1993, pp. 80–84.
16. S. Schiller and M. Neumann, "Application of EB Line Evaporator for Web Coating" in R. Bakish, ed., *Proceedings of the 1st International Vacuum Web Coating Conference*, BMC, 1987, pp. 113–128.
17. T. Yamamori, "Vacuum Roll Coater for the Production of Decorative and Magnetic Tapes" in *Proceedings of the 28th Annual SVC Conference*, 1985, pp. 90–100.
18. A. Paqui, F. Grazzini, and A. Carleti, "High Rate Deposition on High Speed Aluminum Roll Coaters" in *Proceedings of the 36th Annual SVC Conference*, 1993, pp. 185–190.
19. I. K. Baxter, "Effective Film Temperature Control for Vacuum Web Coater" in *Proceedings of the 35th Annual SVC Conference*, 1992, pp. 106–121.
20. E. Hartwig, "Air to Air Vacuum Web Coating" in *Proceedings of the 34th Annual SVC Conference*, 1991, pp. 152–160.
21. T. Taguchi, S. Kamikawa, Y. Ito, M. Mitarai, and K. Matsuda, "Air to Air Metallizer Design and Operational Data" in *Proceedings of the 36th Annual SVC Conference*, 1992, pp. 135–140.

METRICATION IN PACKAGING

Ruben J. Hernandez
School of Packaging, Michigan
State University, East Lansing,
Michigan

The complete expression of any quantity requires both a *number* and a *unit*. Whereas the unit tells us what the quantity is about (and the standard by which is measured), the number indicates how many of those units are considered. Units are part of the daily framework of reference used by a society; when quantities are expressed in familiar units, they are easily understood. In the worlds of commerce, science, industry, and everyday life, we need to express quantities within one group of widely recognized coherent units, which is called a *system* of units. Nevertheless, because of the relative predominance of customary units in the United States, many people still feel uncomfortable when operating with quantities expressed in metric units. In an effort to glean the benefits of using the metric system, the United States has been making slow but steady progress in replacing the customary system of units with the metric one.

Table 1. SI Dimensions, Units, and Symbols

Dimension	Unit	Symbol
Basic units		
Length	meter	m
Mass	kilogram	kg
Time	second	s
Temperature	kelvin	K
Amount of substance	mole	mol
Luminous intensity	candela	cd
Electric current	ampere	A
Supplementary units		
Plane angle	radian	rad
Solid angle	steradian	sr

Because the metric system is simpler and easier to use than the customary system, it has become the internationally accepted system of units. The international metric system is a rational and coherent group of measurement units based on a decimal scale. Like the decimal money system (cent, dime, dollar, etc.), the metric system is organized in factors of tens: 1, 10, 100, and so on. The metric system is based on seven basic units: kilogram (mass), meter (length), degree Celsius (temperature), liter (volume), second (time), candela (luminous intensity), and ampere (electric current). In this article, a brief historical note of the metric system, its characteristics, and common conversion units used in packaging are presented.

HISTORICAL BACKGROUND

Whereas all industrialized countries have only one system of units, in the United States there are two major systems of units in use: the U.S. Customary System (USCS) and the International System (SI), which is also denoted as the *metric system*. The USCS is derived from the British Imperial System and has been customarily used since colonial time, although the current USCS is now somewhat different from the old British Imperial System. By action of state and federal legislation, the USCS has become the fundamental system of units in the United States (1). The metric system, however, is the only system of units that has ever been explicitly approved by the U.S. Congress. In 1866, Congress voted a law making it "lawful through the United States of America to employ the weights and measures of the metric system." In 1875, the United States was an original signatory part to the Treaty of the Meter, which established the General Conference of Weights and Measures, the International Committee of Weights and Measurements, and the International Bureau of Weights and Measures.

Table 2. Prefixes

Multiples	Prefix	Symbol
10^{18}	exa	E
10^{15}	peta	P
10^{12}	tera	T
10^{9}	giga	G
10^{6}	mega	M
10^{3}	kilo	k
10^{2}	hecto	h
10^{1}	deka	da
10^{-1}	deci	d
10^{-2}	centi	c
10^{-3}	mili	m
10^{-6}	micro	μ
10^{-9}	nano	n
10^{-12}	pico	p
10^{-15}	femto	f
10^{-18}	atto	a

Table 3. Selected Units with Special Names in SI

Quantity	Unit Name	Dimensions	Symbol
Absorbed dose	gray	Gy	J/kg
Activity (radioactivity)	becquerel	Bq	s^{-1}
Capacitance	farad	C/V	F
Electricity (amount of)	coulomb	A · s	C
Electrical resistance	ohm	V/A	Ω
Energy	joule	N · m	J
Enthalpy	joule		J
Force	newton	kg · m/s^2	N
Frequency	hertz	S^{-1}	Hz
Heat (amount of)	joule		J
Illuminance	lux	lm/m^2	lx
Luminous flux	lumen	cd/sr	lm
Mass	metric ton	1000 kg	t
Potential difference	volt	W/A	V
Power	watt	J/s	W
Pressure	pascal	N/m^2	Pa
Stress	pascal		
Volume	liter	dm^3	L
Work	joule		

In 1964 the National Bureau of Standard made its policy to use the International System, "except when the use of these units would obviously impair communication or reduce the usefulness of a report." In 1975, Congress approved the Metric Conversion Act; Congress amended it in 1988 and declared the metric system to be the preferred system of measurement for U.S. trade and commerce. Furthermore, the Executive Order 12770, "Metric Usage in Federal Government Programs," was signed in 1991. Despite all the legislation, the United States has not yet embraced use the metric system for the bulk of its

Table 4. Selected Derived Units in Terms of SI Units

Quantity	Name	SI units
Acceleration	meter per square second	m/s^2
Area	square meter	m^2
Concentration	mole per cubic meter	mol/m^3
Density	kilogram per cubic meter	kg/m^3
Luminance	candela per square meter	cd/m^2
Specific volume	cubic meter per kilogram	m^3/kg
Velocity	meter per second	m/s
Volume	cubic meter	m^3
Wave number	reciprocal meter	m^{-1}

Table 5. Units Accepted in the Metric System

Names	Symbol	Value in SI
liter	1 or L	$1\,\mathrm{L} = 10^{-3}\,\mathrm{m}^3$
day	d	1 day = 86,400 s
hour	h	1 h = 3600 s
minute (time)	min	1 min = 60 s
degree (angle)	°	$1^\circ = (\pi/180)$ rad
minute (angle)	′	1′ = 1/60°
second (angle)	”	1” = 1/60′
electronvolt	eV	$1\,\mathrm{eV} \approx 1.602\,18 \times 10^{-19}\,\mathrm{J}$
hectare	ha	$1\,\mathrm{ha} = 1\,\mathrm{hm}^2 = 10{,}000\,\mathrm{m}^2$
metric ton	t	1 t = 1000 kg
unified atomic mass	u	$1\,\mathrm{u} \approx 1.602\,18 \times 10^{-27}\,\mathrm{kg}$

commercial and standard activities. Although the use of the metric system is mandatory in federal agencies, its use by the industry is voluntary. In an effort to promote metrication (the transitional process for converting to the use of the metric system), the Metric Program at the National Institute of Standard and Technology (NIST) has been established (2).

BENEFITS OF THE METRIC SYSTEM

There are many commercial, educational, and technical benefits in using the metric system. The metric system is the measurement system for products, processes, and information in international commerce (3). The European Union regulations will require by the year 2000 that all products sold in their boundaries be labeled in metric units and all the corresponding documentation be expressed in metric system. Japan opposes the import of products with nonmetric units. Other countries and regions, like England, Canada, Australia, China, Mexico, and South and Central America, have already converted their system of measurements to metric units.

With the steady increase in world trade and international interdependence, it is expected that the use of the metric system in the United States will necessarily increase. The use of the metric system by industry is also expected to benefit the consumer because it will promote standardized and simplified product packaging. This will reduce the vast amount of packaging, facilitate price–quantity of product comparison, and standardize shipping

Table 6. Customary and Selected Commonly Used Units into the Metric Units

Quantity	To Convert Customary or Commonly Used Unit	Multiply by	To Obtain Metric Unit
Acceleration	$\mathrm{ft/s^2}$	3.048 E−01[a]	$\mathrm{m/s^2}$
		3.048 E + 01[a]	$\mathrm{cm/s^2}$
	$\mathrm{in./s^2}$	2.54 E−02[a]	$\mathrm{m/s^2}$
Amount of substance	lb · mol	4.535 E + 01	kmol
	STP $\mathrm{m^3}$ (0°C, 1 atm)	4.461 E−02	kmol
	22,414 STP mL (0°C, 1 atm)	1.000 E + 00	mol
Area	$\mathrm{yd^2}$	8.3613 E−01	$\mathrm{m^2}$
	$\mathrm{ft^2}$	9.290304 E−02[a]	$\mathrm{m^2}$
	$\mathrm{in.^2}$	6.4516 E + 00[a]	$\mathrm{cm^2}$
	100 $\mathrm{in.^2}$	6.4516 E−02[a]	$\mathrm{m^2}$
Area factor, yield	$\mathrm{ft^2/lb}$	2.0485 E−04	$\mathrm{m^2/g}$
		2.0485 E−01	$\mathrm{m^2/kg}$
	$\mathrm{yd^2/lb}$	1.8437 E−03	$\mathrm{m^2/g}$
Basis weight, grammage, substance	lb/1000 $\mathrm{ft^2}$	4.882 E + 00	$\mathrm{g/m^2}$
	lb/3000 $\mathrm{ft^2}$	1.627 E + 00	$\mathrm{g/m^2}$
Bending moment/length	$(\mathrm{lb_f} \cdot \mathrm{ft})$/in.	5.338 E + 01	(N · m)/m
	$(\mathrm{lb_f} \cdot \mathrm{in.})$/in.	4.448 E + 00	(N · m)/m
Caloric value, enthalpy per mass unit	Btu/lb	2.326 E + 00	kJ/kg
	cal/g	4.184 E + 00	kJ/kg
	cal/lb	9.224 E + 00	J/kg
Caloric value, enthalpy per mole unit	kcal/g · mol)	4.184 E + 03[a]	kJ/kmol
	Btu/(lb · mol)	2.326 E + 00	kJ/kmol
Concentration	wt%	1.0 E−02[a]	kg/kg
		1.0 E + 01[a]	g/kg
	ppm (wt/wt)	1.0 E + 00[a]	mg/kg
	ppm (vol/vol)	1.0 E + 00[a]	$\mathrm{cm^3/m^3}$
	ppm (wt/vol)	1.0 E + 00[a]	$\mathrm{g/m^3}$ = mg/L
Corrosion rate	$\mathrm{in.^3/yr}$	1.6387 E + 01	$\mathrm{cm^3}$/year
	in./yr	2.54 E + 01[a]	mm/year
	mil/yr	2.54 E−02[a]	mm/year
Density	$\mathrm{lb/ft^3}$	1.601 E + 01	$\mathrm{kg/m^3}$
		1.601 E + 04	$\mathrm{g/m^3}$
	$\mathrm{g/cm^3}$	1.0 E + 03[a]	$\mathrm{kg/m^3}$ = g/L
Diffusion coefficient	$\mathrm{ft^2/s}$	9.290 E−02	$\mathrm{m^2/s}$

(*Continued*)

Table 6. Continued

Quantity	To Convert Customary or Commonly Used Unit	Multiply by	To Obtain Metric Unit
	cm^2/s	1.000 E−04[a]	m^2/s
Edge crush	lb$_f$/in.	1.7513 E−01	kN/m
Energy, work	Btu	1.055 E + 00[a]	kJ
	kcal	4.184 E + 00[a]	kJ
	cal	4.184 E−03[a]	kJ
	J	1.000 E−03[a]	kJ
	cal	4.184 E + 00[a]	J
	erg = dyn · cm	1.000 E−07[a]	J
	ft · lb	1.3557 E + 00	J
Energy density	in. · lb$_f$/in.^{3} = psi	6.8948 E + 00	kPa
		6.8948 E + 03	J/m^3
Flow rate (mole basis)	(lb · mol)/s	4.535 E−01	kmol/s
	(lb · mol)/h	1.259 E−04	kmol/s
Flow rate (volume basis)	ft^3/min	4.719 E−01	dm^3/s = L/s
	ft^3/s	2.831 E + 01	dm^3/s = L/s
	cc/min	1.667 E−05	dm^3/s = L/s
Force	U.K. ton$_f$	9.964 E + 00	kN
	U.S. ton$_f$	8.896 E + 00	kN
	kg$_f$ (kp)	9.80665 E + 00[a]	N
	lb$_f$	4.448 E + 00	N
	dyn	1.0 E−05[a]	N
Length	mi	1.609344 E + 00[a]	km
	yd	9.144 E−01[a]	m
	ft	3.048 E−01[a]	m
		3.048 E + 01[a]	cm
	in.	2.54 E + 01[a]	mm
		2.54 E + 00[a]	cm
	mil = point	2.54 E + 01[a]	μm
	gauge = 0.01 mil	2.54 E−01[a]	μm
	caliper = 10 mil	2.54 E + 02[a]	μm
Mass	short ton	9.07185 E−01	Mg (metric ton)
	lb	4.535 E−01	kg
	oz (troy)	3.011 E + 01	g
	oz (av)	2.835 E + 01	g
Power	hp (electric)	7.46 E−01[a]	kW
	cal/h	1.1622 E + 00	W
	Btu/h	2.9307 E−01	W
	ft · lb/min	2.2597 E−02	W
Pressure, vacuum, bursting strength	atm = 14,696 psi	1.01325 E−01[a]	MPa
		1.01325 E + 02[a]	kPa
		1.01325 E + 0[a]	bar
	bar	1.0 E + 02[a]	kPa
		1.0 E + 05[a]	Pa
	psi	6.8948 E + 03	N/m^2
		6.8948 E + 00	kPa
	mmHg(0°C) = torr	1.33324 E−01	kPa
		1.33324 E−03	bar
	in. Hg (60°F)	3.3769 E + 00	kPa
	in. H_2O (4.0°C)	2.4908 E−01	kPa
Puncture resistance	in. · oz/in.	3.0 E−02	J
Rotational frequency	r/min (rpm)	1.666 E−02	r/s
		1.047 E−01	rad/s
Specific-heat capacity (mass basis)	Btu/(lb · °F)	4.1868 E + 00[a]	KJ/(kg · K)
	kcal/(kg · °/C)	4.184 E + 00[a]	KJ/(kg · K)
Specific-heat capacity (mole basis)	cal/(g · mol · °C)	4.184 E + 00[a]	KJ(kmol · K)
	Btu/(lb · °F)	4.1868 E + 00[a]	Kj/(kmol · K)
Stiffness	g$_f$ · cm (Taber unit)	9.807 E−05	N · m
Stress	lb$_f$/in.^{2} (psi)	6.895 E−03	Mpa
	lb$_f$/ft^2 (psf)	4.788 E−02	kPa
	dyn/cm^2	1.000 E−01[a]	Pa
Surface tension	dyn/cm	1.000 E + 01[a]	mN/m

(*Continued*)

Table 6. Continued

Quantity	To Convert Customary or Commonly Used Unit	Multiply by	To Obtain Metric Unit
Surface energy, tensile energy absorption (TEA)	erg/cm^2 = dyn/cm	1.000 E + 00	mJ/m^2
		1.000 E + 03	J/m^2
	psi · in.	1.7513 E + 02	J/m^2
Tear resistance	Elmendorf unit/ply	1.5696 E + 02	mN
Temperature	°R	5/9	K
	°F	5/9 (°F−32)	°C
	°F	5/9 (°F−32) + 273.18	K
Thermal conductivity	(cal · cm)/(s · cm^2 · °C)	4.184 E + 02[a]	W/(m · K)
	(Btu · ft)/(h · ft^2 · °F)	1.731 E + 00	W/(m · K)
		6.231 E + 00	(kJ · m)/(h · m^2 · K)
	(kcal · m)/(h · m^2 · °C)	1.162 E + 00	W/(m · K)
	(cal · cm)/(h · cm^2 · °C)	1.162 E−01	W/(m · K)
Thermal resistance	(°C · m^2 · h)/kcal	8.604 E + 02	(K · m^2)/kW
	(°F · ft^2 · h)/Btu	1.761 E + 02	(K · m^2)/kW
Torque, moment, TIP	kg$_f$ · m	9.80665 E + 00[a]	N · m
	lb$_f$ · ft	1.356 E + 00	N · m
	lb$_f$ · in.	1.130 E−01	N · m
Velocity (linear), speed	mi/h (mph)	1.609344 E + 00[a]	km/h
	ft/s	3.048 E−01[a]	m/s
		3.048 E + 01[a]	cm/s
	ft/min	5.08 E−03[a]	m/s
	ft/h	8.4667 E−02	mm/s
	in./s	2.54 E + 01[a]	mm/s
	in./min	4.233 E−01	mm/s
Viscosity	(kg$_f$ · s)/m^2	9.806 E + 00	Pa · s
	(dyn · s)/cm^2	1.0 E−01	Pa · s
	cP (centipoise)	1.0 E−03	Pa · s
Viscosity (kinematic)	in.^{2}/s	6.451 E + 02	mm^2/s
	ft^2/h	2.580 E−05	m^2/s
	cSt (centistoke)	1	mm^2/s
Volume	ft^3	2.831 E−02	m^3
	UK gal	4.546 E−03	m^3
		4.546 E + 00	L = dm^3
	U.S. gal	3.785 E−03	m^3
		3.785 E + 00	L = dm^3
	qt (quarts)	9.464 E−01	L
	pt (pint)	4.732 E−01	L
	c (cups)	2.4 E−01	L
	fl oz	2.957 E + 01	mL
	in.^{3}	1.638 E + 01	mL
	Tbsp (tablespoon)	1.5 E + 01	mL
	tsp (teaspoon)	5.0 E + 00	mL

[a] Indicates exact value.

and distribution conditions, including items such as boxes, containers, and pallets. Parallel to this, students learning mathematics will benefit because less time will be spent on cumbersome and distractive conversions.

INTERNATIONAL SYSTEM AND THE METRIC SYSTEM

In 1960, the General Conference of Weights and Measures which was made up of the signatory nations to the Treaty of the Meter, approved the modern version of the metric system, called the International System of Units. The International Systems is officially known by the French title *Systeme International d'Unites*, and it is referred as SI. In this respect, the SI and the metric system are equivalent. Nevertheless, it is accepted that products standards and preferred sizes (like liter) used by industries and governments through the world are considered part of the metric system. For instance, the Metric Conversion Act of 1975 indicates that "the system of measurement means the International System of Units … and as interpreted or modified for the United States by the Secretary of Commerce." Thus, although the metric system and SI are equivalent, the metric system also refers to other units related to SI.

The basic units of the SI are the seven units listed in Table 1 (4). Because the numbers in the quantities expressed in these units can be very large or very small,

Table 7. Permeability Units Conversion Table

To Convert From	To	Multiply by
$\frac{\mathrm{kg \cdot m}}{\mathrm{m^2 \cdot s \cdot Pa}}$	as[a]	1
$\frac{\mathrm{kg \cdot m}}{\mathrm{m^2 \cdot s \cdot Pa}}$	$\frac{\mathrm{kg \cdot \mu m}}{\mathrm{m^2 \cdot day \cdot kPa}}$	8.64×10^{13}
$\frac{\mathrm{g \cdot mil}}{\mathrm{m^2 \cdot day}}$ at 100°F, 90% rh	$\frac{\mathrm{g \cdot \mu m}}{\mathrm{m^2 \cdot day \cdot kPa}}$	4.264
$\frac{\mathrm{kg \cdot \mu m}}{\mathrm{m^2 \cdot day \cdot kPa}}$	$\frac{\mathrm{g \cdot mil}}{\mathrm{m^2 \cdot dayatm}}$	3.989×10^{3}
$\frac{\mathrm{kg \cdot m}}{\mathrm{m^2 \cdot s \cdot Pa}}$	$\frac{\mathrm{g \cdot mil}}{\mathrm{100\,in.^2 \cdot day \cdot atm}}$	2.224×10^{16}
$\frac{\mathrm{g \cdot mil}}{\mathrm{100\,in.^2 \cdot day}}$ at 100°F, 90% rh	$\frac{\mathrm{g \cdot \mu m}}{\mathrm{m^2 \cdot day \cdot kPa}}$	66.09
$\frac{\mathrm{kg \cdot m}}{\mathrm{m^2 \cdot s \cdot Pa}}$	$\frac{\mathrm{m^3(STP) \cdot m}}{\mathrm{m^2 \cdot s \cdot Pa}}$	$\frac{22.414}{\mathrm{MW}^b}$
$\frac{\mathrm{m^3(STP) \cdot m}}{\mathrm{m^2 \cdot s \cdot Pa}}$	$\frac{\mathrm{mL(STP) \cdot mil}}{\mathrm{100\,in.^2 \cdot day \cdot atm}}$	2.224×10^{19}
$\frac{\mathrm{mL(STP) \cdot mil}}{\mathrm{100\,in.^2 \cdot day \cdot atm}}$	$\frac{\mathrm{mL(STP) \cdot \mu m}}{\mathrm{m^2 \cdot day \cdot kPa}}$	3.883
$\frac{\mathrm{mL(STP) \cdot mil}}{\mathrm{100\,in.^2 \cdot day \cdot atm}}$	$\frac{\mathrm{mL(STP) \cdot mil}}{\mathrm{m^2 \cdot day \cdot atm}}$	15.5
as	$\frac{\mathrm{mL(STP) \cdot mil}}{\mathrm{m^2 \cdot day \cdot atm}}$	$\frac{1936.57}{\mathrm{MW}}$
as	$\frac{\mathrm{mL(STP) \cdot mil}}{\mathrm{100\,in.^2 \cdot day \cdot atm}}$	$\frac{498.47}{\mathrm{MW}}$

[a] as = 1 atto second = 1×10^{-18} s.

[b] MW = molecular weight.

prefixes have been included as part of SI. A list of common prefixes is presented in Table 2. Additionally, derived units with special names are officially recognized in the SI and are presented in Table 3. Selected derived units in terms of SI units are shown in Table 4. Table 5 lists selected units accepted in the metric system. A list of conversion factors to convert units of the USCS into the SI, which as often used in packaging, was compiled in Table 6. Because the permeability units are more complex, they are presented separately in Table 7.

CONVERTING AND ROUNDING

Conversions should follow the simple rule of error propagation for multiplication (or division) of two numbers; figures that imply more accuracy than justified by the original data should not be included. For instance, 24 in. converted to cm (24 × 2.54) should be written as 61 cm, not 60.91 cm. Only two significative figures are given in 24 in. Similarly, 2.7 $\mathrm{lb/ft^3}$ converts to 43 $\mathrm{kg/m^3}$, and from Table 7, 0.3 mL (STP) · mil/(100 $\mathrm{in.^2}$ · day · atm) converts to 1×10^{-20} $\mathrm{m^3(STP) \cdot m/(m^2 \cdot s \cdot Pa)}$.

NAMING THE METRIC SYSTEM

All the metric system units have a name and a symbol; for instance, the symbol for the unit named liter is L. Important rules referring to the use of name, symbols, and prefixes in the metric system are as follows (1, 5):

1. The names of all units begin with a lowercase letter (unless at the beginning of the sentence). There is one exception to this rule: degrees Celsius, °C. The unit "degrees" in lower case but the modifier "Celsius" is capitalized. For instance, the glass-transition temperature of PET is 78°C. For other units, see Tables 1, 3 and 5.
2. Unit symbols are written in lowercase (e.g., m and kg). However, the following exceptions apply: liter is written in capital L (to avoid confusion between "l" with the numeral "1"), as well as units honoring a person, like W for watt, K for kelvin, Pa for pascal, and so on.
3. Symbols of prefixes indicating a million or more are capitalized (see Table 2); for example, M for mega (10^6). Symbols indicating less than a million are in lowercase: for kilo (10^3) is k, and milli (10^{-3}) is m. This may create some confusion, and attention should be given to distinguish for example, mN (millinewton) from N · m (Newton-meter)
4. When the preceding numerical value is more than 1, the name of the unit is made plural, and singular is used in the case of 1 or less (e.g., 50 μm, 105 kP, 0.25 g, and 0.5 L). Still, "degrees" is always plural when not referring to one; we say 1 degree Celsius, but 0.5 degrees Celsius. The symbols are never written in plural: 13.5 liters is 13.5 L, 67.3 megapascals is 67.3 MPa.
5. A prefix, however common, must not be used to replace a unit. For example, "kilo" (which is a prefix for 1000) should not be used for "kilogram." "Micron" is no longer accepted to indicate 1×10^{-6} m; the correct term is micrometer (μm). The unit of

temperature is degree Celsius, not degree centigrade (the latter term is no longer accepted).

6. Numeric values with five or more digits are sometimes separated by spaces, not commas (e.g., 7 689 734 Pa or 0.047 65 cm). For values of up to four digits, spacing is optional.

BIBLIOGRAPHY

1. Anonymous, National Institute of Standards and Technology, LC 1136, May 1992.
2. *Metric Program*, National Institute of Standards and Technology, U.S. Department of Commerce, Gaithersburg, MD.
3. G. P. Carver, *The Global Path to Global Markets and New Jobs: A Question-and-Answer and Thematic Discussion*, NISTIR 5663, National Institute of Standards and Technology, June 1990.
4. B. N. Taylor, *Interpretation of the SI for the US and Metric Conversion Policy for Federal Agencies*, NIST Special Publication 814, October 1991.
5. *Federal Register*, 55 *CFR* 52242-522450, Dec. 20, 1990.

MICROWAVABLE PACKAGING AND DUAL-OVENABLE MATERIALS

George J. Huss
Rubbright Brody, Inc.
Eagen, Minnesota

INTRODUCTION

The 1980s saw the prolific growth of the consumer microwave oven resulting in a new category of food products. Development of the new products spawned a new market for packaging materials, some of which were capable of being rethermalized in a conventional oven as well as the microwave oven (known as *dual-ovenable* products and materials), while still other new products and their packages evolved that were developed strictly for heating in the microwave oven. The penetration of microwave ovens into U.S. homes and lifestyles grew rapidly from a mere 15% of households owning a microwave oven in 1980 to an impressive 78% by 1989 (1). Consumers were hungry for food products designed for cooking and rethermalization in the microwave oven, and a new category known as "microwave foods" developed seemingly overnight.

The new category was bolstered by microwave popcorn, a product that was developed specifically for preparation in the microwave oven. The standard was now set for other new food products that attempted to cater to consumers' desires for foods offering quickness and convenience in their preparation. In the mid-1980s, we saw a wave of premium-priced frozen dinners, positioned as a higher quality "TV dinner," that were now available on thermoset polyester plates, capable of being heated in the conventional-oven environment (up to 400°F) or the microwave. The new category of frozen dinners saw active growth and entry by several companies who were keen on capitalizing on the consumers' desire for foods that could be conveniently heated in the microwave oven. In many cases, the feature of a product that could be prepared as packaged in either a conventional oven or a microwave oven was important to food marketers, even when their research showed that 85% of their consumers were using the microwave oven.

The new microwave-foods category was growing at such a rate that it was difficult to ignore. New departments and teams were assembled in food companies to develop new products for the burgeoning new category. *Gorman's New Product News* tracked the number of product introductions, which increased from 278 in 1986 to nearly 1000 in 1988. Often, these new foods were merely traditional food products that were packaged for microwave-oven preparation or traditional foods that now included preparation directions for the microwave oven. As a greater understanding of the effect of microwave energy on different foods and packaging materials grew, so, too, did a desire to improve the quality of the food as eaten to the same level observed with conventional-oven preparation. Greater focus on foods engineered specifically for the microwave oven led to packaging materials that performed strictly in the microwave oven. The following is a list of materials that are currently available, or were used at some time, for use as packaging components for foods to be heated in the conventional oven, the microwave oven, or in some cases, both oven environments.

DUAL-OVENABLE MATERIALS

Coated Paperboard. Paperboard is available as a dual-ovenable material in the form of trays, plates, and cartons. Generally, the paperboard used is solid bleached sulfate (SBS), but solid unbleached sulfate (SUS), also referred to as *natural* or *kraft paperboard*, can be used; however, market applications are strongly skewed to SBS use. To make an ovenable material, the paperboard is coated, generally with a fine clay on one side to impart higher surface gloss and a proper surface for printing, along with an extrusion coating of a film made of polyester (PET) or, in some cases, 4-methyl-pentane-1 copolymer (TPX). The thin layer of a high-temperature plastic provides a relatively inexpensive method to produce containers that capitalize on the structural strength and economics of the paperboard component while adding the barrier required to keep fats and moisture in the food from entering the paperboard. Other plastics are also extrusion-coated onto paperboard, notably low-density polyethylene (LDPE) and polypropylene (PP); however, the maximum temperature resistance of LDPE is 215°F and 260°F for PP. The upper temperature limit for LDPE- and PP-coated paperboard will dictate the packaging application. With a maximum temperature limit of 215°F, LDPE-coated paperboard provides excellent properties for milk cartons and cold and hot-drink cups; however, its use in the microwave oven will be limited to products that will not get hot, such as a frozen dessert that may be microwaved to only soften the contents. Similarly, PP-coated paperboard is available for microwave-only packages in which there is no risk that the hot spots within a package can reach a temperature where the PP softens, causing structural changes in the package or the PP to break down, allowing some of its constituents to enter the food.

The dominant ovenable paperboard is PET-extrusion-coated. With a maximum temperature use of 400°F, PET-coated paperboard is well suited for forming containers to be used in dual-ovenable containers for a variety of food products. TPX-coated paperboard is preferred in baking applications because of its higher temperature resistance and its release characteristics for sugars that may become caramelized during the cooking cycle. TPX-coated paperboard is more expensive than PET-coated paperboard.

The clay coating is put on the paperboard either in-line on the paperboard-making machine or at a remote station. The clay coating in both cases is done on mill-size rolls of paperboard that are about 200 in. wide. The coated mill roll can then be slit to widths more appropriate for laminating equipment and forming and carton-making machines.

To form a tray from a roll of PET-coated paperboard, the paperboard is first moistened with water to a level of 8–11%. This softens the paperboard to allow pressure forming. The roll of paperboard is first cut into blanks that have the flange dimension of the finished container. The blank is then indexed into a heated matched metal mold that, when closed, forms the blank into the mold shape, i.e., the shape of the container. The heat in the mold dries the paperboard. Since the paperboard does not stretch, this type of forming will produce a square container with small creases in the corners or creases around the base of a round or oval container.

Molded Pulp, PET-Film-Laminated. PET-film-laminated molded pulp trays are cellulose-based containers most commonly seen as plates and trays. The PET film is required to provide the barrier resistance to fats and oils to go along with the structural characteristics of the lower cost pulp. The cellulose fibers are suspended in a slurry (which may contain other components such as sizing and treatments to provide better barrier properties) and pumped to the compression molds, which form the pulp into the desired container shape. The slurry is held into the mold by vacuum, which also draws most of the water out through a screen. Pressure and heat are applied as the mold closes to form the pulp into the container shape and draw out the remaining water. An advantage to this type of molding is the flexibility in the shape of the finished container, which may include divided compartments and areas with varying dimensional thickness for strength. After the molding cycle, the containers are laminated with a cast PET film, which is then trimmed of any excess and packaged.

PET-laminated molded pulp trays will withstand oven temperatures of 400°F with good stiffness and structural characteristics.

CPET. Crystallized polyester (polyethylene terephthalate) is a rigid plastic material that can be thermoformed into containers, generally shallow plates and trays. To become dual-ovenable, the PET must be crystallized during the thermoforming process. The PET contains nucleating agents that assist in the molecular crystallization. A key factor to consider when thermoforming CPET is the intrinsic viscosity (IV) of the material. The amount of crystallization and the IV will determine the balance between the container's stiffness at low (–40°F) and high (400°F) temperatures. Generally the crystallinity of the finished container will be 28–32% and the IV will range from 0.85 to 0.95.

Prior to extruding, the PET must be thoroughly dried to a level of 0.003% to remove inherent water. For thermoforming, great care must be given to temperature control to ensure consistency. The ovens used to heat the sheet on the thermoformer prior to forming must heat the sheet evenly across its dimensions. CPET is considered to be a difficult material to work with because of its toughness and narrow window of operating temperatures, so proper mold design is a consideration. Aluminum molds are used to promote even thermal conductivity during forming. Female molds are used, and the design should allow for generous radii and minimize undercuts. Often a second stage used in the molding process is a cooling mold that assists in shortening the cycle time, helps to stabilize the material after it is formed in the heated mold, and makes trimming easier. Because of its toughness, CPET is difficult to trim. Matched metal dies are used and should be sharpened periodically. Additionally, heavy-duty trim presses with quick cycle times should be used.

CPET has a temperature resistance of 400°F, has a high gloss, has a hard surface, and can be colored with pigment effectively, although the preferred colors in the market are black, white, and ivory.

PCTA. Another material in the polyester family that has higher temperature-resistance properties than CPET is a copolyester resin composed of a polymer of cyclohexanedimethanol and terephthalic acid (PCTA), often referred to by Eastman Chemical Company's trade name, Thermx. PCTA is a thermoformable material capable of withstanding temperatures in the range of 425–450°F. Processing is generally considered to be more difficult than CPET because of the higher temperatures required for extrusion and thermoforming and greater cooling requirements. A special nucleating agent is required; however, equipment specified for running CPET will generally be able to run PCTA with the proper adjustments. PCTA, like CPET, is able to be marked with the Society of the Plastics Industry (SPI) code as number 1—PETE for recycling purposes.

Foamed CPET. Shell Chemical Company has developed a method of making foamed CPET that it markets under the trade name PETLITE. The objective of this material is to produce containers with 35–40% less material than conventional CPET. Extrusion equipment used for CPET must be modified for running foamed CPET; however, a single-screw extruder can be used. The blowing agent used for the expansion is an inert gas. Generally, processing temperatures for extrusion and thermoforming are comparable with CPET as are pigmenting and trimming requirements.

PETLITE containers have a temperature resistance of 400°F. Currently, commercial applications include containers for baked goods such as muffins and cakes.

Borden Global Packaging, UK, has recently announced the availability of their version of foamed CPET under the trade name Ovenex Lite. Trays made of Ovenex Lite contain 25–33% less material than their solid counterparts. Commercial availability in stock sizes are available from Borden in mid-1996. Borden uses their own process for foaming CPET for which a patent is pending.

Thermoset Polyester. Thermoset polyester plates were the first commercial application of dual-ovenable materials when used for frozen meals in the mid-1980s. The compound used is an unsaturated polyester that is highly filled with minerals such as talc and calcium carbonate, along with glass fibers and catalyst materials to produce the chemical reaction to convert the compound into material that is irreversibly set. The polyester compound is mixed and extruded to form logs that are cut to the proper size and weight for the finished container. The material is placed into a heated mold in a hydraulic press that closes the mold. The pressure causes the material to flow into the shape of the mold, and the heat cures the compound while under pressure into the finished and irreversible material. Typically, the container must be sanded to remove any flashing around the edges and often is run through a conveyor oven for a postbake cycle to drive off any residual uncured compound, and washed to remove any dust from sanding. This process produces containers that are very strong and stiff, even at high temperatures (425°F), and are heavy with a china-like feel and appearance. Unlike thermoforming from a sheet of material with consistent thickness, thus producing containers having essentially the same material thickness throughout, compression molding permits the finished containers to have varying degrees of thickness throughout the dimension to add strength or design features where desired. Because of the amount of material used, the multiple steps in the manufacturing process, and the relatively low output per machine cycle for compression molding presses, the price for a thermoset polyester plate is proportionally higher than competitive thermoformed plastic materials that can be produced at much higher rates with less material and cellulose-based containers that have a lower material cost.

Nylon 6/6. Mineral-filled nylon (or polyamides) is a dual-ovenable material that today is no longer commercially available. Developed by DuPont Canada during the mid-1980s, mineral-filled nylon was also converted by DuPont Canada by injection molding into containers. Mineral-filled nylon plates have a higher temperature resistance and stiffness (500°F) than does CPET and were priced between CPET and thermoset polyester containers. Although the material was successfully introduced commercially, the use was limited because of the higher cost than CPET; also, the hydroscopic nature of filled nylon plates sometimes caused performance problems in the microwave oven. Nylon has good resistance to oils and fats; however, within the moist operating environment of the microwave oven, some of the water present in the food would be absorbed into the nylon plate, resulting in a loss of dimensional stability. Nylon plates' strength was in the conventional oven, where unlike some competitive thermoplastic materials, it retained its rigidity.

Nylon plates were injection-molded, a process that generally has higher tooling costs and higher operating costs when compared with thermoforming comparable unit volumes.

Polyetherimide. Polyetherimide (PEI) is a high-temperature thermoplastic resin available from General Electric Plastics under the trade name Ultem.

PEI provides a dual-ovenable material for applications of about 350°F. PEI is available only in injection-molding grades, and with its high price per pound, it is generally better suited for multiple-use versus single-use applications. PEI also has good chemical and stain resistance, allowing for it to effectively be cycled through commercial dishwashing systems.

PEI has been used for plates and containers in institutional feeding programs and airline meals.

Polysulfone. Polysulfone (PSO) is an amorphous thermoplastic with good rigidity and toughness. PSO is capable of withstanding oven temperatures below 325°F, making it well suited to low-temperature and microwave applications. PSO is available in transparent form, lending its use in appliances as a replacement for glass and other multiple-use applications.

Because of its high price, PSO has not been used in single-use applications.

Liquid-Crystal Polymer. Liquid-crystal polymers (LCPs) offer very good high-temperature resistance up to about 500°F in some grades. LCP can be injection-molded and is generally pigmented from its natural beige color (see also Liquid crystalline polymers).

LCP is transparent to microwave energy; however, the high price of this resin limits its use to specialized applications. At one time, LCP was in commercial use as dual-ovenable cookware marketed by Tupperware.

Aluminum. Prior to the explosion of microwavable foods during the mid-1980s, aluminum trays dominated the prepared- and frozen-meals market as well as food-service applications such as school-lunch programs. As a package material for use only in conventional ovens, aluminum was ideal. It was capable of withstanding very high temperatures for long times—certainly exceeding the temperature limitations of the food, was usually available at attractive prices, and could be run at a high speed on packaging equipment.

During the early stages of the microwave oven, arcing occurred when metal objects were placed in the oven cavity during operation, sometimes disabling the unit. This was largely corrected when the electronics were improved so that energy could not be reflected back into the magnetron. Even though it was safe for metal objects to be used in the microwave oven, consumers did not want to take the risk.

In the mid-1980s, Alcoa developed a plastic-coated aluminum tray that was formed without the typical wrinkled corners. The vinyl/epoxy coating was often pigmented to appear more like plastic and allowed the tray to work in both conventional and microwave ovens. Performance in the microwave oven is different from that of plastic- or cellulose-based materials since the aluminum shields microwave energy, often leading to longer heating times than for similar trays of competitive materials. This lends the design of the tray shape to be shallow to lessen the amount of microwave energy shielded. Coated aluminum foil trays were used commercially for pot pies where they were able to maintain high filling line speeds.

Polycarbonate. Polycarbonate (PC) is an amorphous thermoplastic resin that is capable of withstanding temperatures above 400°F. PC can be injection-molded, blow-molded, and thermoformed.

PC has been used in applications for multiple-use products such as microwavable cookware. PC is virtually unbreakable, making it a good replacement for glass. PC was used in a commercial package during the late 1980s for Stouffer's dual-ovenable meals. The structure used was thermoformed from a three-layer coextruded sheet; however, because of its high price per pound, it was replaced by competitive materials that offered acceptable performance for a much lower cost.

MICROWAVE-ONLY MATERIALS

Polypropylene. During the late 1980s, polypropylene grew as a microwave material because of its flexibility and relatively low cost. Polypropylene (PP) use in packaging was bolstered by the rapid growth of shelf-stable meals such as Lunch Buckets (registered trademark) and the like, in which ethyl vinyl alcohol (EVOH) is used to improve the oxygen-barrier properties required to safely preserve the cooked food at ambient temperatures.

Microwavable containers of PP can be thermoformed or injection-molded, generally in two different types: homopolymer PP and random copolymer PP. Homopolymer PP is produced using propylene monomer without the addition of other monomers. Random copolymer PP is similar in polymeric structure to homopolymer PP but also includes the random addition of ethylene to a polypropylene chain as it grows. Random copolymer PP gains some molecular orientation, providing certain advantages over homopolymer PP such as improved impact strength and much better clarity.

Homopolymer PP can also be filled with minerals such as talc or calcium carbonate at levels of 20–40%. Filled homopolymer PP will have a slightly higher end-use temperature and greater stiffness than its unfilled form.

Polyphenylene Oxide/Polystyrene. Polystyrene (PS) by itself does not have a sufficiently high-temperature resistance (about 180°F), but when blended with polyphenylene oxide (PPO), the temperature-resistance properties are increased depending on the ratio of PS to PPO. For temperature resistance in the range of 212–230°F, a blend of 25% PPO and 75% PS is recommended.

PPO has a low resin flow and is therefore difficult to form; however, when it is blended with PS, the flow characteristics and processing requirements are improved. PPO/PS can be thermoformed on equipment used for PS forming with only minor modifications. It is important to have accurate blending during the extrusion process; therefore, a high-intensity mixing screw is required. Additionally, PPO/PS is able to be foamed (much like expanded polystyrene) by extruding with tandem extruder systems and blowing agents used for polystyrene such as pentane.

PPO is available from General Electric Plastics under the trade name Noryl.

Polyethylene. High-density polyethylene (HDPE) is an acceptable thermoplastic resin for some microwave applications. HDPE starts to lose its rigidity at temperatures above 200°F, resulting in distortion of the tray or container, so care must be given in selecting this material for food products that will not exceed this temperature. This means that foods that have a high fat or oil content or those that generate steam will not be good candidates for HDPE. Generally, applications for HDPE are for foods that do not have a long heating cycle and have a homogenous texture to balance heating throughout the food, thereby eliminating hot spots.

The advantages of HDPE are its relatively low cost in comparison with other resins, its processing ease, and its good impact properties at frozen temperatures. HDPE for food trays is most commonly thermoformed but also can be injection-molded (see also Polyethylene, high density).

Glass. Although glass usage as a packaging material has declined steadily, it is a material that is able to withstand the rigors of microwave heating. Because of the advantages plastic has over glass in consumer safety, transportation costs, and design flexibility, there are very few applications where glass is selected as a packaging material because of its ability to be used in the microwave.

BIBLIOGRAPHY

H. A. Rubbright and N. O. Davis, The *Microwave Decade*, Packaging Strategies, West Chester, PA, 1989, p. 6.

MICROWAVEABLE FOODS PACKAGING

Kit L. Yam
Department of Food Science,
Rutgers University, New
Brunswick, New Jersey

INTRODUCTION

While microwaveable food products have been quite popular in the past two decades, there still remain many challenges for the developer and manufacturer. Besides convenience, other factors such as taste and texture are also important to the consumer. Quite often, the consumer perceives food heated by the microwave oven as not tasting as good as that heated by the conventional oven. This is because the heating mechanisms of food in the microwave oven and conventional oven are indeed quite different. To develop successful microwaveable food products, the developer must have a good understanding of the microwave heating of food, as well as careful considerations of the package design and consumer expectation.

BASICS OF MICROWAVE HEATING OF FOOD

Microwave heating of food is a complex process that requires a good understanding of several relevant disciplines: electromagnetism, food engineering, food chemistry, food packaging, and food microbiology. It is beyond the scope of this article to provide detailed descriptions of the many aspects of this complex process. Instead, this article is aimed at acquainting the reader with the basic working knowledge most relevant to the microwave heating of foods. More general information can be found from references in the literature (1–3).

Microwaves

Microwaves are short electromagnetic waves located in the portion of electromagnetic wave spectrum between radio waves and visible light. The energy is delivered in the form of propagating sine waves with an electric field and a magnetic field orthogonal to each other. Microwaves are relatively harmless to humans because they are a form of non-ionizing radiation, unlike the much more powerful ionizing radiation (such as X ray or gamma ray) that can damage the cells of living tissue. Microwaves are used in daily applications such as cooking, radar detection, telecommunications, and so on.

Most microwave ovens for food applications operate at two frequencies. The household microwave oven operates at 2450 MHz (2.45×10^9 cycles per second), and the industrial microwave oven operates at 915 MHz (9.15×10^8 cycles per second). The wavelengths associated with those frequencies are 0.122 and 0.382 m, respectively, when the microwaves are assumed to travel at the speed of light (3×10^8 m/s). Microwaves travel at approximately the speed of light in air, but they travel at a lower speed inside a food material. The relationship between frequency and wavelength is expressed by the equation $v = f\lambda$, where v is velocity (m/s), f is frequency (Hz), and λ is wavelength (m) of an electromagnetic wave.

There are three possible modes of interaction when microwaves impinge upon a material: absorption of microwaves by the material, reflection of microwaves by the material, and transmission of microwaves through the material. The material may be a food or a packaging material. The food must absorb a portion of the microwave energy in order for heating to occur. Most foods do not reflect microwaves, and thus all the remaining unabsorbed microwave energy is transmitted. Some packaging materials, such as susceptors, absorb microwave energy and become hot. Metals, such as aluminum foils, reflect microwaves. Paper, plastics, and glass are transparent to microwaves. To optimize the microwave heating of food, it is necessary to consider the reflection, absorption, and transmission of microwaves by the food and the package.

In the microwave oven, microwaves are generated by an electronic vacuum tube known as a magnetron. The microwaves then travel through a hollow metal tube (called a “waveguide”) to the oven cavity. To improve the heating uniformity, the microwave oven is often equipped with a stirrer or a turntable. The stirrer is a fanlike set of spinning metal blades used to scatter the microwaves and disperses them evenly within the oven. The turntable rotates the food during the microwave process. The history, features, standardization, and safety matters relating to the microwave oven are discussed by Decareau (1).

Microwave/Heat Conversion

Microwave energy is not heat energy. In order for microwaves to heat food, they must first be converted to heat. There are two mechanisms by which this energy conversion can occur: dipole rotation and ionic polarization. The two mechanisms are quite similar, except the first involves mobile dipoles while the second involves mobile ions. Both dipoles and ions interact only with the electric field, not the magnetic field.

Figure 1a illustrates the dipole rotation mechanism of a polar molecule. In the presence of an electrical field, the polar molecule behaves like a microscopic magnet, which attempts to align with the field by rotating around its axis. As the polarity of the electric field changes, the direction of rotation also changes. The molecule thus absorbs microwave energy by rotating back and forth billions of times at the frequency of microwaves. Since the molecule is often bound to other molecules, the rotating action also causes it to rub against those other molecules. The rubbing action disrupts the bonds between the molecules, which in turn causes friction and heat dissipation.

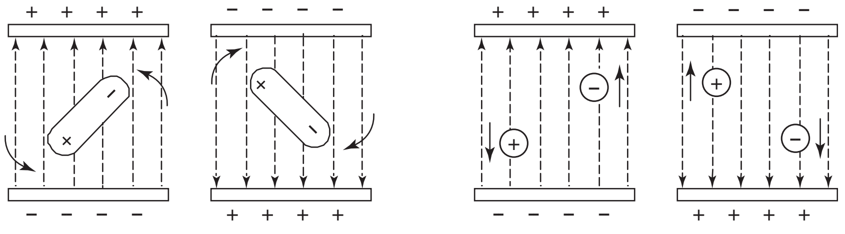

(a) Dipole rotation (b) Ionic polarization

Figure 1. Microwave/heat conversion mechanisms. The dashed lines denote the alternating electric field at the frequency of microwaves. (a) A dipole rotates back and forth. At high frequencies (such as 2450 MHz), there is not sufficient time for the dipole to rotate 180°, and thus the actual rotation angle is much smaller. (b) A positive ion and a negative ion oscillate in an alternating electric field.

The water molecule is the most abundant polar molecule in food. The water molecules in liquid water are quite mobile, and they readily absorb microwave energy and dissipate it as heat through dipolar rotation. In contrast, the water molecules in ice are much less mobile due to the confined crystal structure, and they do not absorb microwave well. The distribution of moisture and the state of water (liquid water or ice) are often two critical factors that determine the behavior of microwave heating of foods.

Figure 1b illustrates the ionic polarization of a positive ion and a negative ion in solution. In the presence of an electric field, the ions move in the direction of the field. As the polarity of the electric field changes, the ions move in the opposition direction. The ions absorb microwave energy by oscillating themselves at the frequency of microwaves. The oscillating action in turn causes heat dissipation through friction. The common ions in food are those from salts such as sodium chloride. Since ions are less abundant than water molecules in most foods, ionic polarization often plays a less important role than dipole rotation.

Dielectric Properties

While dipole rotation and ionic polarization provide a qualitative understanding of the microwave/heat conversion mechanisms, the dielectric properties provide a quantitative characterization of the interactions between microwave electromagnetic energy and food. The dielectric properties, along with thermal and other physical properties, determine the heating behavior of the food in the microwave oven.

An important dielectric property is dielectric loss factor (ε''), which indicates the ability of the food to dissipate electrical energy. The term “loss” refers to the loss of energy in the form of heat by the food. It is useful to remember that a material with a high ε'' value (also known as a lossy material) heats well, while a material with a low ε'' value heats poorly in the microwave oven. The dielectric loss factor is related to two other dielectric properties by the equation

$$\tan\delta = \varepsilon''/\varepsilon' \qquad (1)$$

where $\tan\delta$ is loss tangent and ε' is dielectric constant.

The dielectric properties (ε' and ε'') are functions of frequency, temperature, moisture content, and salt content. Values of dielectric properties for foods and other materials can be found in the literature (4–6). Examples of ε'' and ε' values at 2450 MHz are shown in Table 1. Although the literature values can be used as guidelines, actual measurements are often required because of the variability of composition of the materials.

The dielectric properties provide a quick indication of how well a material heats in the microwave oven. For example, the ε'' value of water (12.48) at 25 °C is several orders of magnitude higher than that of ice (0.0029) at −12 °C. This means that water heats far better than ice in the microwave oven. Ice is almost transparent to microwaves because its molecules are tightly bound and do not rotate easily through the mechanism of dipolar rotation.

Table 1. Dielectric Constant (ε'), Dielectric Loss Factor (ε''), and Penetration Depth (D_p) of Various Foods at 2450 MHz

Food or Other Material	ε'	ε''	D_p (cm)
Ice (−12 °C)	3.2	0.0029	1203
Water (1.5 °C)	80.5	25.0	0.71
Water (25 °C)	78	12.48	1.38
Water (75 °C)	60.5	39.93	0.40
0.1 M NaCl (25 °C)	75.5	18.1	0.94
Fat and oil (average)	2.5	0.15	20.6
Raw beef (−15 °C)	5.0	0.75	5.83
Raw beef (25 °C)	40	12	1.04
Roast beef (23 °C)	28	5.6	1.85
Boiled potatoes (−15 °C)	4.5	0.9	4.6
Boiled potatoes (23 °C)	38	11.4	1.07
Boiled spinach (−15 °C)	13	6.5	1.11
Boiled spinach (23 °C)	34	27.2	0.45
Polyethylene	2.3	0.003	986
Paper	2.7	0.15	21.4
Metal	∞	0	0
Free space	1	0	∞

The dramatic increase in ε'' value is also observed when ice changes to water—that is, during the thawing of frozen foods including beef, potato, and spinach (Table 1). Plastics and paper have low ε'' values because they are almost transparent to microwaves.

Penetration Depth

The speed of microwave heating is due to the deep penetration of microwaves into the food, and the dielectric properties can be used to determine the extent of penetration. When microwaves strike a food surface, they arrive with some initial power level. As microwaves penetrate the food, their power is attenuated since some of their energy is absorbed by the food. The term penetration depth (D_p) is defined as the depth at which the microwave power level is reduced to 36.8% (or 1/*e*) of its initial value.

The meaning of penetration depth is further illustrated in Figure 2. At the first D_p, 36.8% of the initial power remains, while 63.2% of the power is absorbed. At the second D_p, $(0.368)^2 = 13.5\%$ remains and 86.5% is absorbed. At the third D_p, $(0.368)^3 = 5.0\%$ remains and 95% is absorbed. The penetration depth depends on the composition of material, the frequency of microwaves, and temperature.

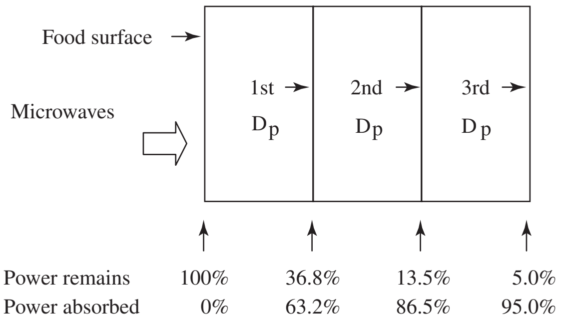

Figure 2. Power levels at various penetration depths.

Typical values of D_p for various materials at 2450 MHz are also shown in Table 1. As mentioned earlier, liquid water absorbs microwaves far better than ice. The D_p of water at 25 °C is 1.38 cm, but D_p of ice at −12 °C is 1203 cm! Frozen foods have longer penetration depths than unfrozen foods. For example, the D_p values for frozen beef and unfrozen beef are 5.83 cm and 1.04 cm, respectively.

CHALLENGES IN MICROWAVE HEATING OF FROZEN FOOD

While microwave heating offers the benefits of speed cooking and convenience, it also presents many technical challenges to the food scientist or technologist. Those challenges arise from the need to deal with the many variables relating to the food, package, and microwave oven. For the food, there are variables of food composition, shape, size, specific heat, density, dielectric properties, and thermal conductivity. For the package, there are variables of shape, size, and properties of packaging material. For the microwave oven, there are variables relating to the design of the oven. A related and more important challenge is to solve the problems of the consumer. From the consumer's point of view, the most noticeable problems are those associated with nonuniform heating, lack of browning and crisping, and variation in microwave ovens.

Nonuniform Heating

Nonuniform heating is a major problem associated with microwave heating. The problem is especially noticeable for frozen food. It is not uncommon for a frozen food heated in a microwave oven to boil around the edges while the center remains frozen. The problem is caused by the differences in microwave energy absorption of liquid water and ice.

In frozen foods, the water molecules on the surface are relatively free to move compared to the water molecules inside the food. When a frozen food is microwaved, heating begins at the surface where the water molecules are more ready to absorb microwave energy. This causes the adjacent ice crystals to melt and the surface temperature to rise, while the inside temperature is still little unaffected. As more liquid water is available, the heating of the surface becomes more rapidly. This can lead to "runaway heating," in which heating is excessive at the surface while the inside is still frozen. To minimize runaway heating during thawing, microwave energy should be delivered at a slow rate, which allows more time for heat to conduct from the surface to the inside.

Irregular shape of the food can also cause nonuniform heating. The thin parts tend to overcook, while the thick parts tend to undercook. This situation also occurs in conventional cooking but is less pronounced because the cooking is slower. Another cause of nonuniform heating is that different foods have different dielectric and thermal properties. When a microwave meal consists of two or more items, it is possible that the items heat at different rates. For example, when microwave heating a frozen meal consisting of meat and vegetable, the vegetable often becomes overheated and dried out before the meat reaches the serving temperature.

Lack of Browning and Crisping

Another problem is that, unlike the conventional oven, the microwave oven is not able to produce foods that are brown and crisp. This is because the heating mechanisms of the conventional oven and the microwave oven are quite different.

In the conventional oven, the food is heated by hot air in the oven; and if the heating element is not shielded, the food is also heated by radiated heat. Heating is concentrated on the food surface by means of heat convection and radiation. The inside of the food is also heated, at a slowly rate, by means of heat conduction. The heating causes the moisture on the food surface to evaporate rapidly, and later it causes browning and crisping to occur. Although the moisture inside the food tends to migrate to the surface, the rate is not sufficiently fast to prevent browning and crisping. As a result, the food surface becomes brown and crispy while its inside remains moist and soft.

In the microwave oven, there is no hot air, and heating is mostly due to the interaction between microwaves and water. Microwave heating is not concentrated on the food surface, but it is distributed within the food depending on the penetration depth. The heating on the food surface is no longer sufficiently intense to cause browning and crisping. Unless the food is microwaved for a long time to remove all or most of the water in the food (which is not desirable because the food quality may no longer be acceptable), browning and crisping either do not occur at all or are inadequate.

Browning formulations have been developed for various meat and dough products (1). Commercial steak sauces, barbecue sauces, soy sauces, and so on, are brushed on meat before microwave heating. Reusable browning dishes are also available for browning food surfaces in the microwave oven. Most of the commercial browning dishes are made of glass–ceramic substrate with tin oxide coating on the underside. The packaging industry has also developed a disposable browning and crisping material, known as susceptor, discussed later in this article.

Variation in Microwave Ovens

Yet another problem is the large variation of performance in different microwave ovens. Microwave ovens are available in different powers, oven cavity sizes, with or without a turntable, with or without a stirrer (to distribute microwaves more evenly in the oven). Consequently, different microwave ovens may produce greatly different results, even if the same cooking instructions are used. To accommodate the differences, the food manufacturer can only place vague microwave heating instructions on their packages. For example, a package may contain vague instructions such as "heat between 4 and 8 minutes, depending on the microwave oven."

Meeting the Challenges

There is no easy solution to deal with the complex process of microwave heating. In developing a microwavable food product, the scientist or technologist has to rely on the somewhat useful but incomplete scientific knowledge described in the previous sections, as well as trial-and-error or empirical methods.

From the discipline point of view, there are three approaches to deal with the challenges. The first is the food chemist's approach, in which food ingredients are modified and browning formulations are added to make the food more microwaveable. The second is the packaging engineer's approach, in which the package is modified to enhance the performance of microwave heating. The third is the microwave engineer's approach, in which new and useful features are added to the microwave oven. Ideally, these approaches should be integrated into a system to deliver the highest quality of microwaveable foods to the consumer.

Many microwaveable food products have failed in the past because of lack of performance or high cost. Good technical and marketing tools are essential for developing better-tasting microwaveable products, without increasing the cost or decreasing the effectiveness of cooking. Although the food manufacturer and the packaging supplier have been working together to develop microwaveable products, there has been relatively little collaboration between them and the oven manufacturer. There is a need to have all parties (including also the academia) work more closely together to bring about innovations that can deliver better microwaveable products to the consumer.

MICROWAVEABLE PACKAGING

The primary functions of the package are to contain, protect, and sell the product. A general discussion on the packaging of frozen foods is presented in Chapter 6. If the package is used to hold the food during microwave heating (as is the case for many microwaveable frozen meals), the interactions between microwave and the package must also be considered. Since the package can transmit, reflect, or absorb microwaves, it can also greatly influence the microwave heating behavior. The package may act "passively" by simply transmitting microwaves. The package may also act "actively" by reflecting and absorbing microwaves in a manner that the power distribution of microwaves and the surface temperature of package are modified. To optimize microwave heating, it is necessary to properly balance these three microwave/package interactions (transmission, reflection, and absorption) to optimize the heating of the food. Microwaveable packaging materials may be classified into microwave transparent materials, microwave reflective materials, and microwave absorbent materials.

Microwave Transparent Materials

A microwaveable package must be wholly or partly transparent to microwaves. The most common microwave transparent materials are paper and plastics. Although glass is also transparent to microwaves, it is seldom used to package frozen food.

Plastic-coated paperboard trays are popular for microwavable frozen meals, mainly because of their low cost. The trays combine the rigidity of the paperboard and the chemical resistance of the plastic. The inside of the trays is either extrusion-coated with a resin or adhesive-laminated with a plastic film. For microwave-only applications, plastics such as low-density polyethylene (LDPE), high-density polyethylene (HDPE), and polypropylene (PP) are used. For dual oven applications (i.e., usable in both microwave and conventional ovens), polyethylene terephthalate (PET) is used because of its high temperature stability (up to about 200 °C).

Molded pulp trays are another common paper product. The containers are dual ovenable and can be molded into several compartments. They are stronger and can carry more load than the paperboard containers.

Thermoformed plastic trays are also common heating containers for microwaveable frozen foods. LDPE trays are suitable for light microwave heating because the trays tend to distort at temperatures as low as 75 °C. PP trays have a distortion temperature of about 110 °C. Homopolymer PP trays are brittle at low temperatures and can crack during distribution and handling at freezer temperatures. Copolymer PP trays have somewhat improved low-temperature durability. Crystallized PET (CPET) trays are the most widely used plastic trays for microwaveable frozen meals. The CPET trays are functional in the temperature range from −40 to 220 °C. Thus the trays can withstand not only the low temperatures encountered in distribution and handling, but also the temperatures in conventional oven (i.e., the trays are dual ovenable).

Microwave Reflective Materials

Aluminum foil, aluminum/plastic laminate, and aluminum/plastic/paperboard laminate are the most common microwave reflective materials. Since these materials do not allow the transmission of microwave, they are also known as microwave shielding materials.

Aluminum is often used to selectively shield microwaves from certain areas of a food (Figure 3). For example, a multicomponent meal may consist of food items that heat at different rates in the microwave oven. The more microwave-sensitive food item(s) can be shielded so that the entire meal can be heated more even.

Aluminum is also used as an electromagnetic field modifier to redirect microwave energy in a manner to optimize the heating performance (10). Aluminum can intensify the microwave energy locally or redirect it to places in the package that otherwise would receive relatively little direct microwave exposure. This approach has been used to redirect microwave energy from the edges to the center for frozen food products such as lasagna.

When aluminum foils are used in the microwave oven, precautions are necessary to prevent arcing, which can occur between foil packages and the oven walls, between two packages, across tears, wrinkles, and so on. Arcing can be prevented by following several simple design rules (11). For example, any foil components should be receded from

Figure 3. Trays with selectively shielded areas. (Courtesy of Graphic Packaging Inc.)

the edge of the package to avoid arcing with the oven walls. In additional to following those rules, it is also necessary to thoroughly test the package/product to ensure that the package is safe to use.

Microwave Absorbent Materials

Microwave absorbent materials used for food packaging are commonly known as susceptors. The major purpose of susceptors is to generate surface heating to mimic the browning and crisping ability of the conventional oven. Although many types of susceptors have been invented (12), the only commercially available type is the metallized film susceptor (Figure 4). This type of susceptor consists of a metallized polyethylene terephthalate film laminated to a thin paperboard. The metal layer is a very thin (less than 100 angstroms), discontinuous layer of aluminum, which is responsible for generating localized resistance heating when exposed to microwaves. The heating can cause the susceptor to reach surface temperatures over 200 °C within seconds.

Figure 4. Metallized film susceptors. (Courtesy of Graphic Packaging Inc.)

Susceptors have been used for products such as pizza, French fries, waffles, frozen hot pies, and popcorn. Susceptors are available in the forms of flat pads, sleeves, and pouches. The flat pads are suitable for products (such as pizza) that require heating only on one surface. The sleeves and pouches are suitable for heating on multiple surfaces (9). Susceptors are also available in various patterns, in which portions of the metallized layer are deactivated (10). The patterns are designed to provide more control of heating. A company uses a printed checkerboard pattern to generate various levels of heating based on the size of the check.

There is a public concern of migration of mobile compounds from the susceptor to the food, because the susceptor can reach high temperature. The FDA has issued voluntary guidelines regarding the safe use of the susceptor for the packaging to follow.

CONCLUDING REMARKS

While microwaveable foods and meals have become an integral part of our lifestyle, improvements are still needed to continue to justify their place in the freezer case. Although microwaveable products can provide the consumer with convenience, they often fail to impress the consumer with taste and texture. There are many technical and economical challenges for developing new and improved microwaveable frozen products. To meet those challenges, the industry (food manufacturer, packaging supplier, and oven manufacturer) and the academia should work more closely together—to innovate and develop better microwaveable food products that are more tasty, healthy, and convenient to use.

BIBLIOGRAPHY

1. R. V. Decareau, *Microwave Foods: New Product Development*, Food & Nutrition Press, Trumbull, Connecticut, 1992.
2. C. R. Buffler, *Microwave Cooking and Processing: Engineering Fundamentals for the Food Scientist*, Van Nostrand Reinhold, New York, 1993.
3. A. K. Datta and R. C. Anantheswaran, *Handbook of Microwave Technology for Food Applications*, Marcel Dekker, New York, 2001.
4. N. E. Bengtsson and P. O. Risman, “Dielectric Properties of Foods at 3 GHz as Determined by a Cavity Perturbation Technique II. Measurements of Food Materials,” *J. Microwave Power* **6**(2), 107–123 (1971).
5. S. O. Nelson, “Electrical Properties of Agricultural Products (A Critical Review),” *Trans. ASAE* **16**(2), 384–400 (1973).
6. A. K. Datta, E. Sun, and A. Solis, “Food Dielectric Property Data and Their Composition-Based Prediction” in M A. Rao and S. S. H. Rizvi. eds., *Engineering Properties of Foods*, Marcel Dekker, New York, 1995, pp. 457–494.
7. C. Saltiel, A. K. Datta, “Heat and Mass Transfer in Microwave Processing,” *Adv. Heat Transfer* **32**, 000–000 (1998).
8. K. G. Ayappa, Modeling Transport Processes During Microwave Heating: A Review,” *Revi. Chem. Eng.* **13**(2), 1–68 (1997).

9. J. R. Quick, J. L. Alexander, C. C. Lai, S. A. Matthews, D. J. Wenzel, Tube from Microwave Susceptor Package, U.S. Patent No. 5,180,894, January 19, 1993.
10. T. H. Bohrer and R. K. Brown, "Packaging Techniques for Microwaveable Foods" in A. K. Datta and R. C. Ananthes-waran, eds., *Handbook of Microwave Technology for Food Applications*, Marcel Dekker, New York, 2001, pp. 397–469.
11. A. Russell, "Design Considerations for Success in Microwave Active Packaging Development" in *Conference Proceedings, Future-Pak 99*, George O. Schroeder Associates Inc., 1999.
12. G. L. Robertson, "Packaging of Microwavable Foods" in *Food Packaging Principles and Practice*, Marcel Dekker, New York, 1992, pp. 409–430.

MIGRATION FROM FOOD CONTACT MATERIALS

Manfred Ossberger
FABES Forschungs-GmbH

INTRODUCTION

Food and packaging are closely tied together. Food packaging material requires optimization of its properties to control physical and chemical interaction between food and packaging. In general, food consists of numerous ingredients with in many cases low chemical stability. Therefore, food has to be packed to protect it against spoilage, insects, micro-organisms, light, and other environmental impacts like humidity or oxygen, which could all lead to a decrease of the food quality. Protection against unauthorized access and information about the packaged foodstuff are some other important functions of packaging. There are a variety of plastics with different properties composed of several polymers and containing additives that are likely to migrate used to fulfill the specific packaging requirements. It is important to realize that not only the food quality is time dependent, but also the food packaging is not at "steady state." After production the packaging mass transfer processes starts immediately. Two diffusion-controlled processes have to be considered:

- Permeation (lat. *permeare*) refers to the process, where chemical substances diffuse from the environment into the food or vice versa.
- Migration (lat. *migrare*) means the diffusion of substances from the packaging into the food or from the food into the packaging.

In addition, chemical reactions in the packaging or food or between them are also possible and have to be taken into account.

PLASTIC MONOLAYER MATERIALS IN CONTACT WITH FOODSTUFF

Diffusion (kinetics) and partitioning (thermodynamics) constitute the most important interactions:

The driving force of diffusion comprises different chemical potentials between two adjacent media, which was first mentioned and investigated by Adolf Fick (1829–1901), who postulated the following laws:

$$\text{Fick's 1st law: } J = -D\frac{\partial c}{\partial x} \tag{1}$$

where J expresses the flux (or "current density" of particles), c the concentration of particles, and x the distance for particles travel. The flux J expresses the amount of matter passing through a unit area of a film in unit time. Fick's 1st law is the solution of Fick's 2nd law under steady state conditions $\partial c/\partial t = 0$ as in the case of permeation, e.g., of gases like oxygen or water vapor through packaging materials (1, 2).

$$\text{Fick's 2nd law: } \frac{\partial c}{\partial t} = D\frac{\partial^2 c}{\partial x^2} \tag{2}$$

where t expresses the time and D the diffusion coefficient. Fick's 2nd law describes the diffusion of migrants, e.g., in the two-phase system of packaging and food in the direction of the concentration gradient.

Most solutions of the second diffusion equation for systems in contact with liquid are derived from analogous mathematical solutions of the heat conductance equation (standard works by Carslaw and Jaeger, Crank) (3, 4). These analytical solutions are obtained by using simplifying assumptions. For example, one get the expression

$$\frac{m_{F,t}}{A} = \frac{2}{\sqrt{\pi}} c_{P,0} \rho_P \sqrt{D_P t} \tag{3}$$

where $m_{F,t}$ is the amount of the migrated compound at time t, A the contact area, $c_{P,0}$ (wt/wt) the initial concentration of the migrant in the polymer, ρ_P the density of the polymer, D_P the diffusion coefficient of the migrant in the polymer, and t the contact time. There it is assumed that the solubility of the migrant in the liquid is very high, the thickness of the packaging infinite, and the migration far from equilibrium.

This expression overestimates migration as the system approaches equilibrium (mass transfer greater than approximately 60%). Therefore, more general solutions have to be defined to characterize the migration process (see next equation):

$$\frac{m_{F,t}}{A} = c_{P,0} \rho_P d_P \left(\frac{\alpha}{1+\alpha}\right) \times \left[1 - \sum_{n=1}^{\infty} \frac{2\alpha(1+\alpha)}{1+\alpha+\alpha^2 q_n^2} \exp\left(-D_P t \frac{q_n^2}{d_P^2}\right)\right] \tag{4}$$

$$\text{with } \alpha = \frac{V_F/V_P}{K_{P,F}}, K_{P,F} = c_{P,\infty}\rho_P / c_{F,\infty}\rho_F \text{ and } \tan q_n = -a q_n$$

where in addition to constants defined for Equation (3), ρ_F is the density of the liquid food, d_P is the thickness of the polymer, V_P and V_F the volume of the polymer and the liquid food, $K_{P,F}$ the partition coefficient, and q_n the positive roots of the trigonometric identity. $K_{P,F}$ is defined as the ratio of the migrant concentration in the polymer and the liquid food at equilibrium. Using this expression, overestimation is limited and the migration can be estimated at equilibrium; there a finite volume of the polymer is assumed.

Regarding Equation (4), the total amount of material is transported away from the contact layer into the foodstuff at the beginning of migration. Thus, the concentration in the contact layer goes to zero. Whereas the diffusion rate of the migrants in the packaging material is the rate-determining step, the partition coefficient $K_{P,F}$ (and α, respectively) plays an increasing role with longer migration times. Especially for $K_{P,F} \gg 1$ ($\alpha \ll 1$), there is only very low migration into the food.

If the foodstuff is viscous or solid, one gets a different solution of Fick's 2nd law since the diffusion coefficient of the migrant in the solid food has to be taken into account:

$$\frac{m_{F,t}}{A} = \frac{2}{\sqrt{\pi}} c_{P,0} \rho_P \frac{\beta}{1+\beta} \sqrt{D_P t} \tag{5}$$

$$\text{with } \beta = \frac{1}{K_{P,F}} \sqrt{\frac{D_F}{D_P}}$$

where D_F is the diffusion coefficient of the migrant in the food. For $D_F \gg D_P$ and $K_{P,F} \leq 1$, equation (3) results.

In order to use equation (4), the two coefficients D_P and $K_{P,F}$ are needed. As the values of both coefficients can vary over orders of magnitudes and may not be readily available, one has to assume "worst-case" scenarios like good solubility of the migrant in the liquid food or simulant (i.e., $K_{P,F} = 1$). In order to estimate upper limits of D_P, the following semi-empirical formula was developed (5–7):

$$D_P = D_0 \exp\left(A_P - 0.1351 M_r^{2/3} + 0.003 M_r - \frac{10454}{T}\right) \tag{6}$$

$$\text{with } A_P = A'_P - \frac{\tau}{T}$$

where D_0 is 10^4 cm^2/s, A_P the material specific constant, M_r the relative molar mass of the migrant (Dalton), and T the temperature (Kelvin). Values of the constant τ and A'_P for certain polymers are given in Table 1. The equation can be used for $M_r \leq 4000$ Dalton. As regulation asks for safety margins and thus "worst-case" A'_P values for modeling migration to avoid underestimation, it is possible to match the parameter A_P to yield a "worst-case" value, A'^{*}_P (see Table 1). This leads to corresponding D^{*}_P instead of the real D_P. In equation (6), $A_P \leq A^{*}_P = A'^{*}_P - \tau/T$, the parameter A^{*}_P should now be regarded as an "upper-bound" conductance of the polymer.

Table 1. Values for worst case A_P (A'^{*}_P), mean A_P ($\bar{A}'_P$) and the parameter τ for estimating diffusion coefficients D_P in polymers (eq. 6)

Polymer	A'^{*}_P	$\bar{A}'_P$	A'_P (max)	A'_P (min)	τ
LDPE	11.7	10.0	11	7.0	0
HDPE	13.2	10.0	12.6	5.0	1577
PP	12.4	9.4	12.9	6.2	1577
PET	6.35	2.2	7.2	−4.3	1577
PEN	3.7	−0.34	3.8	−5.5	1577
PS	−0.7	−2.8	0	−6.5	0
HIPS	0.1	−2.7	0	−6.2	0
PA(6,6)	1.9	−1.54	2.3	−7.7	0

Values for A_P are obtained by performing kinetic studies, measuring migration after, e.g., 1, 2, 4, 8, and 10 days (see example; Figure 1). By comparison of the experimental data with calculated data (software programes, please see last section), one can calculate D_P and $K_{P,F}$.

For the polyolefines, another semi-empirical diffusion model has been developed by Limm and Hollifield (8):

$$D_P = D_0 \exp\left(\alpha M_r^{1/2} - K M_r^{1/3}/T\right) \tag{7}$$

with values for D_0, α, and K given in Table 2.

A basic conclusion of both Fick's laws is that if a concentration gradient is present, diffusion takes place immediately. The velocity of mass transport is subject to the diffusion coefficient D, the kinetic dimension of the diffusion process, which is a function of temperature. D for a migrant with medium molecular weight varies from ca.

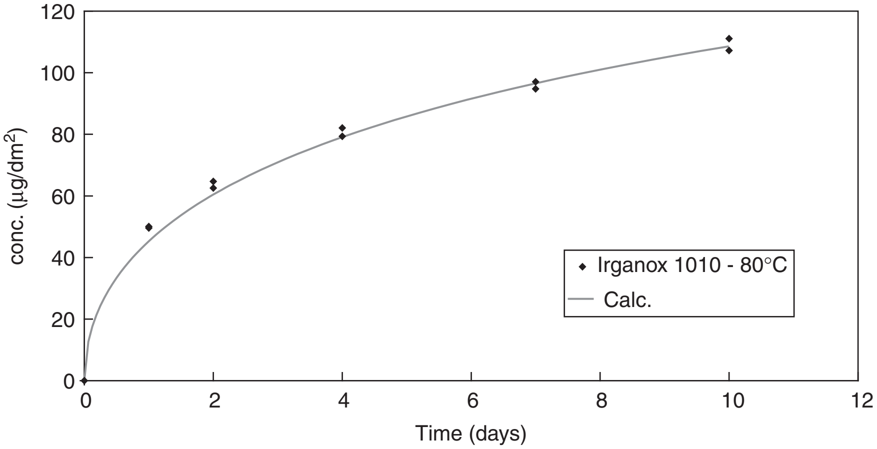

Figure 1.

Table 2. Values for D_0, α and K in eq. (7).

Polymer	$\ln(D_0)$	α	K
LDPE	−4.16	0.555	1140.5
HDPE	0.90	0.819	1760.7
PP	−2.10	0.597	1335.7

$10^{-5}\,\mathrm{cm}^2/\mathrm{s}$ in solutions to $10^{-18}\,\mathrm{cm}^2/\mathrm{s}$ in PET-materials. The quantity of migrants in the other layer(s) can be further dictated by thermodynamics, which is expressed by the partition coefficient K. Consequently, if the diffusion rate is high, but the migrant is not soluble in the other media, there will be only low mass transport from the origin to the adjacent layer(s). This coefficient is strongly influenced by the solubility of the migrant in the contacting media and varies roughly from $K_{P,F} = 1$ for well solubility to $K_{P,F} = 1000$ for bad solubility. In addition to estimations for diffusion coefficients, procedures exist to estimate the partition coefficients (9).

In summary, the quantity of migration is strongly controlled by the diffusion coefficient (D) and partition coefficient K, which are affected by the *identity* of the packaging material and its chemical structure (→ D, K), *chemical structure* and *polarity* of the migrant (→ K), *molecular weight* of the migrant (→ D), *concentration* of the migrant in the packaging (→ D), *kind of packed food* (water, acid, alcoholic, fatty, dry) (→ D, K) and if there is an *interaction* between food and packaging (→ D), *volume* of the packed food (→ K), and *time and temperature conditions* (→ D, K) at which the packed food is stored.

The preceding discussion holds true only if the diffusion and partition coefficients are constant while diffusion takes place and if the packaging is inert against the packed foodstuff. Otherwise if D and K vary with time or swelling is observed, diffusion can no longer be described by Fick's 2nd law ("non-Fickian processes"). In addition, at very low migrant concentrations, the migration rate may no longer be proportional to its concentration in the polymer. Considering paper and board, physical interactions and mass transportation are controlled by sorption processes, what makes estimation more intricate.

MULTILAYER PLASTIC MATERIALS IN CONTACT WITH FOODSTUFF

In the past, packaging was generally made of monolayer materials like polyethylenes (PE), polypropylenes (PP), polyamides (PA), polystyrenes (PS), polyethylene terephthalates (PET), paper and board, aluminium, ceramics, and glass. As each material has unique useful properties, several materials are now combined into multilayer materials. In addition, such multilayer systems consist of lacquers, coatings, printing, and/or adhesive layers. Migration processes may originate from all different layers, each with different physical properties (like D and K, vapor impermeability). As a consequence, migration processes are more complicated and the use of numerical models and algorithms is sometimes necessary (see the section "Measurement Procedures for Quantification of Migrants"), especially if there are analytical problems.

MIGRANTS

The use of glass as a food contact material is advantageous as there is no migration possible. In contrast, as mentioned, migration in plastics has to be considered. A common feature of all polymer materials is their backbone of natural or synthetic macromolecules composed of hundreds of repetitions of small chemical units (monomers) that are connected via covalent bonds. Compared with pure natural polymers, e.g., proteins, synthetic polymers are polydisperse; i.e., the polymer is a mixture of molecules with various chain lengths and molar masses. Up to ca. 2% of low-molecular-weight molecules with $M_W < 10^3\,\mathrm{g/mol}$ account for the polymer, which are of possible toxicological interest. All other polymer compounds are immobile due to their high molecular weight.

Hence, there is a trend to switch from monomeric additives to polymeric additives. The disadvantage of this is the lower reactivity, and thus, higher concentrations of polymeric additives are needed.

Actually many more substances are incorporated into plastics that the producer and end user has to pay attention to. In addition to the residual amounts of initiators (e.g., peroxide compounds) and metal oxide catalysts, there are a huge amount of additives, such as antioxidants, plasticisers, antistatics, lubricants, and pigments, added to the polymer for better processing, protection, or appearance of the polymer, which are all possible migrants. Some common examples for each additive group are given in Table 3.

Beside that *not-intended-additives* (NIAS) such as transformation products and contamination from plastic and additive production are additional sources of migrants.

As stated in the Introduction, migration is possible in two directions, from the packaging into the food and from the food into the packaging. Therefore, many substances (and flavors) in food are also likely to migrate (e.g., Limonene, which is contained in soft drinks, migrates into plastic packaging). This is also true considering permeation. "Flavors" or gases can permeate from the environment into the food and thus have to be taken into account. It should also be stressed that sometimes migration of, e.g., antistatics and lubricants is intended and crucial for certain applications.

MEASUREMENT PROCEDURES FOR QUANTIFICATION OF MIGRANTS

The purpose of migration testing is to ensure the compliance of food packaging by detection and quantification of migrants. Since migration and not extraction is to be measured, interactions changing the mechanical and diffusion properties of the package should be minimized between food contact material and foodstuff.

Table 3. List of several common plastic additives

Antioxidants	Octaethyl-3-(3,5-di-tert-butyl-4-hydroxyphenyl)propionate	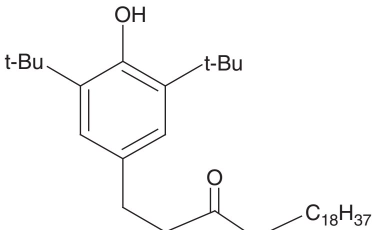
	Phosphorous acid, tris(2,4-di-tert-butylphenyl)ester	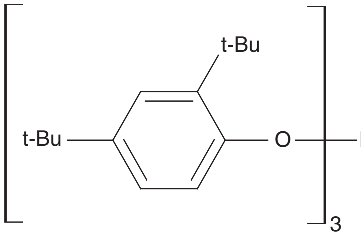
Plasticiser	Di-n-octylphthalate	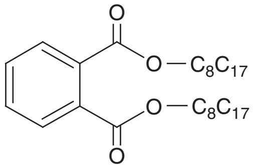
UV absorbers	2-(2′-Hydroxy-5′-methylphenyl)benzotriazole	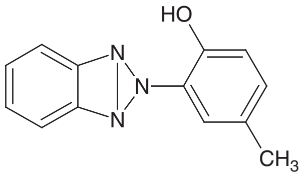
	2-Hydroxy-4-n-octyloxybenzophenone	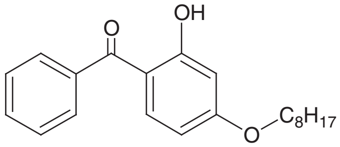
Acidity regulator	Stearoyl-2-lactylic acid, calcium salt	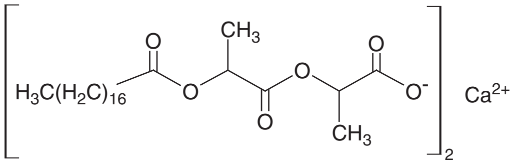
Lubricants/ Antistatics	Glycerol 1-monostearate	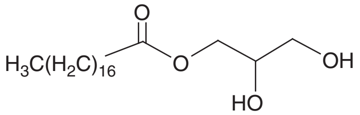
	N,N-Bis(2-hydroxyethyl)lauramide	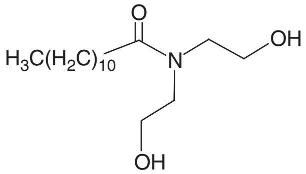
	Behenamide	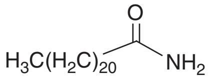
Antifogging agent	Sorbitan, esters with acids, aliph., monocarbonic acids (more than C5) (R)	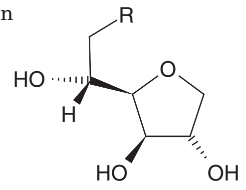
Slip agent	(Z)-13-Docosenamide (Erucamide)	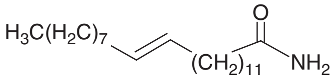

Usually the following procedures are used for detection and quantification of migrants: Foils and boards are fixed into a migration cell (see Figure 2(a)), covered with the food or adequate food simulant and stored at specific time and temperature conditions, which are laid down in specific directives (see the section on "Regulation"). As food itself is too intricate to analyze, certain food simulants are allowed to be used instead: simulant A (distilled water) for aqueous foods, simulant B (acetic acid 3%) for acidic foods (pH$\leq$4.5), simulant C (ethanol 10%) for alcoholic foods, 50% ethanol for milky products, simulant D (olive oil) for fatty foods, and the synthetic polymer Tenax for dry foods. As olive oil presents analytical problems, there are two alternative food simulants for fatty foodstuffs, ethanol 95% and isooctane.

The migration solution is analyzed by means of gas or liquid chromatograph coupled with certain spectrometers and/or detectors. Another option is the complete immersion of the package into the liquid (see Figure 2(b)). Quantification is derived from using internal standards (semiquantitative procedure) or by using calibration solutions (quantitative procedure), and evaluation is done depending on existing legislation requirements.

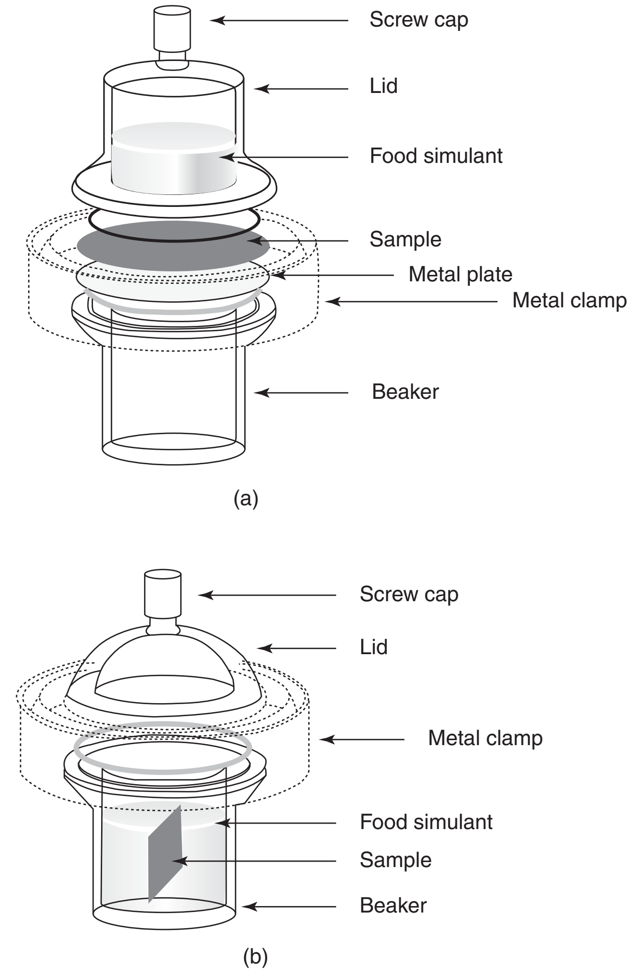

Figure 2.

Sometimes it is more convenient to start not with analytical determination of migration but with calculation. When the initial concentration of the migrant in the polymer ($c_{P,0}$) is known, it is common and legal practice in verification of compliance with migration limits to assume complete mass transfer of the migrant from the packaging material into the food or food simulant. If the result is below the specific migration limit, no more analytical measurements are necessary regarding this specific migrant.

As shown in the second section, mass transfer from *monolayer* materials into food is a predictable physical process, which can be quantified with appropriate mathematical algorithms. After European authorities completed the project "Evaluation of Migration Models to be used under Directive 90/128/EEC" (10) in 2002, migration modeling could now be used as an alternative method for evaluation purposes and the use of migration modeling was legalized in the "plastic directive" 2002/72/EC (Article 8, Section 4) (11). Details on which types of plastic materials and foods are covered by this paragraph as well as the basic mathematical algorithms that can be used for the migration estimation are summarized in the "Practical Guide" and "Note for Guidance" (12, 13) for "Estimation of migration by generally recognized diffusion models." This document states a series of conditions that should be considered when someone intends to use modeling to determine compliance of a certain packaging material. Several software programmes have been developed (e.g., (14) to aid in migration estimations.

It is stated above that many different types of materials are used in multilayer packages and it is assumed that there is no interaction between packaging and food simulants.

However, migration processes are more complicated and sometimes it is difficult to choose the correct simulant that does not swell the material. For this reason, the use of *numerical* models and algorithms are necessary to get reliable migration results and/or a consistent interpretation of experimental data, and to get a deeper insight and understanding on migration processes. Software programes like MIGRATEST©EXP (15–17) have been developed and adapted to deal with the increasing complexity of multilayer food contact materials. Because of the huge amount of different (food) contact materials and because multilayer systems pose analytical problems, the use of existing sophisticated migration modeling software programs and their continued development will be indispensable.

REGULATION IN THE EU AND USA

Conservation of the high quality of foodstuff is the most important function of food packaging materials. As outlined in the previous sections, potentially harmful migrants may diffuse out of the packaging into the foodstuff and be consumed. Therefore, diffusion processes out of packaging materials and the total amounts of migrants in the food should be minimized and are regulated by national and international authorities.

In the European Union, the European Food Safety Authority (EFSA) is the keystone of EU risk assessment regarding food and feed safety. EFSA produces scientific opinions and advice providing basic information to the European Commission, European Parliament, and EU Member States as well as allowing them to make (legislative) decisions. Due to the lack of regulations in the food packaging sector and as not all packaging materials are yet covered by European legislation, national legislation (and national recommendations, e.g., recommendations of the German Bundesinstitut für Risikobewertung (BfR)) have to be taken into account.

In the framework regulation 1935/2004/EC of the European Parliament and of the council (18) on materials and articles intended to come into contact with food, common and superior guidelines regarding demands on food packaging are laid down. Also a list of groups of materials and articles (e.g., adhesives, ceramics, rubbers, plastics, paper and board, inks, cellulose, etc.) is stipulated, which may be covered by specific measures. Until now only specific regulations exist for plastics (directive 2002/72/EC and its five amendments) (11), ceramics (84/500/EEC and its amendment) (19), and regenerated cellulose (2007/42/EC) (20). Most important is the "plastic directive" where several alternatives for verification of compliance of the food packaging materials are given. Therein measuring of the migration is possible by an adequate experimentation (see directives 82/711/EEC, 85/572/EEC, 93/8/EEC, and 97/48/EEC) (21–24) and by application of generally recognized mathematical diffusion models based on scientific evidence. Furthermore, a positive list of authorized monomers and additives with restrictions for certain substances (e.g., "specific migration limits" SMLs) was built up at the community level. The SML values are generally calculated based on ADI (acceptable daily intake) and TDI (tolerable daily intake) values, laid down by the Scientific Committee for Food (SCF). ADI and TDI values are derived from toxicological studies.

Hence, for a positive evaluation of a certain packaging, the migration results should meet the following limits:

- Global migration is less than 10-mg/dm^2 and 60-mg/kg food, respectively.
- The amount of each detected additive (listed in the positive list) is under its SML or the global migration limit.
- The amount of each detected additive, which is *not* listed in the positive list, is under 10 μg/kg food) (2007/19/EC) (25) when no toxicological data exist.

In addition, the packaging shall be manufactured in compliance with good manufacturing practice (GMP) and the additional general requirements laid down under article 3 of the directive 1935/2004/EC.

For evaluation and addition of a new substance to national or European positive lists, a petition has to be transmitted to the adequate authority, including identity and proposed use of the new substance, migration, and toxicological documents. As a general principle, the higher the exposure through migration, the more toxicological information is required (see Table 4).

Whereas EU authorities look at the identity and quantity of chemical substances detected in the food or food simulants, and list all substances, which are toxicologically evaluated and allowed to be used in all kinds of packaging material, the U.S. Food and Drug Administration (FDA) established a food contact notification process, whereby food additives are deemed to be safe for their *intended use*. That means that in comparison with the EU, substances evaluated by the FDA are only allowed to be used in special applications and concentrations, which are mentioned in their authorization processes (food contact notification, FCN). For using these substances in other applications, a new FCN has to be submitted to the FDA. The law governing food packaging in the United States is the Federal Food, Drug and Cosmetic Act of 1958 as amended and the Fair Packaging and Labeling Act. Regulated food contact substances can be found in title 21 of the Code of Federal Regulations (CFR) (26). This title is subdivided into parts covering specific regulatory areas (e.g., indirect food additives: polymers; indirect food additives: adjuvants, production aids and sanitizers, etc.). Sometimes there are substances "generally recognized as safe" (GRAS; e.g., ascorbic acid). Such substances are allowed to be used in packaging materials, if a consensus is reached by scientists that the substance is GRAS, and if

Table 4. Required toxicological information for evaluation by EFSA

Migration of substance	Tests	
<0.05 mg/kg food	3 mutagenicity tests	• induction of gene mutations in bacteria • induction of gene mutation in mammalian cells *in vitro* • induction of chromosomal aberrations in mammalian cells *in vitro*
0.05–5 mg/kg food	• 3 mutagenicity tests • 90-day oral toxicity study • data to demonstrate the absence of potential for accumulation in human being	
>5 mg/kg food	• above mentioned tests • further studies (e.g. on reproduction, absorption, distribution)	

there are experimental data and published studies that support this opinion.

In addition, if the estimated daily intake (EDI) from the proposed use of the substance is less than or equal to 0.5 μg per kg food and 1.5 μg per person and day, respectively ("threshold of regulation" TOR), and if the substance has not been shown to be a carcinogen in humans or animals and presents no other health or safety concerns, an exemption from the notification process can be granted by the FDA. If not, the petitioner has to send roughly the same toxicological and migration data to the FDA as to the EFSA. Whereas the European SMLs are calculated from toxicological values that are compared with migration data, the FDA calculates from migration data the EDI, which is compared with the corresponding ADI and TDI values. The EDI is calculated as the product of the migrant concentration $<M>$ in the total daily diet, based on consumption factors (CF) and food type distribution factors (f_T), and the factor 3, assuming that one person consumes 3 kg of food (liquid and solid) per day:

$$\mathrm{EDI} = 3\,\mathrm{kg\ food/person/day} \cdot \langle M \rangle \cdot \mathrm{CF} \tag{8}$$

$$\langle M \rangle = f_{aqueous\ and\ acidic}\ (M_{10\%\ Ethanol}) + f_{alcohol}\ (M_{50\%\ Ethanol}) + f_{fatty}(M_{fatty})$$

CF describes the fraction of the daily diet expected to contact specific packaging materials. It represents the ratio of the weight of all food contacting a specific packaging material to the weight of all food packed. These values were derived using information on the types of food consumed or the types of food contacting each packaging surface. The factor f_T considers the nature of food that will likely contact the food contact material containing the migrant. Both factors, CF and f_T, are published in certain guidances (e.g., (27)).

FUTURE TRENDS IN PACKAGING AND EVALUATION

The majority of the just off-the-shelf produced materials and articles intended to come into contact with foodstuff are passive materials mainly made out of plastics, (recycled) paper, and metal. In the future there will be a shift to the development and increased usage of active and intelligent packaging materials. These active and intelligent materials can, for example, indicate the edibility of the food and prolong the freshness and the shelf life of food. Also nanotechnology will be used in the food packaging sector to increase the functionality of materials (e.g., protection and indication of freshness). The development of more sustainable and environmentally friendly packaging is an ongoing trend, and new sustainable and biodegradable packaging materials will be developed and used.

However, legislative authorities will still have to evaluate the impact of food safety of these new materials on the health of the consumer. Authorities also still have to evaluate the safety of "nonplastic"-layers (e.g., coatings, adhesives, etc.) in multilayer materials that have not been taken into account yet.

As mentioned, the experimental measurement of migration is closely linked to certain directives, e.g., 85/572/EEC (22). But some problems arose in this system as implemented with the use of food simulants and not foodstuffs to measure migration in a simple and reproducible way. Therefore, the European Union and (industry) partners have launched the project "Food Migrosure" to overcome these weaknesses. The EU foresees that in order to show compliance, the migration into foodstuffs and not into food simulants is crucial and the exposure evaluation has to be based on migration values in food. Migration values are obtained by experiments and by modeling. In addition, other (proposed) projects like FACET ("flavours, additives and food contact material exposure task") are aimed at collecting deeper knowledge about both consumer exposure by packaging components and the physical properties of each layer of the multilayer packaging materials.

BIBLIOGRAPHY

1. H. C. Langowski, "Permeation of Gases and Condensable Substances Through Monolayer and Mulilayer Structures" in A. Baner, O. Piringer, eds., *Plastic Packaging – Interactions with Food and Pharmaceuticals*, Wiley-VCH Verlag, Weinheim, 2008, pp. 297–348.
2. J. Brandrup, E. H. Immergut, and E. A. Grulke, eds., *Polymer Handbook*, Wiley Interscience, New York, 1999.
3. H. S. Carslaw and J. C. Jaeger, *Conduction of Heat in Solids*, Oxford University Press, Oxford, UK, 1959.
4. J. Crank, *Mathematics of Diffusion*, Oxford University Press, Oxford, UK, 1975.
5. A. L. Baner and O.-G. Piringer, *Plastic Packaging Materials for Food*, Wiley-VCH Verlag, Weinheim, 2000.
6. O. Piringer, *Evaluation of Plastics for Food Packaging*, **Food Add. Contam. 11**, 221–230 (1994).
7. J. Brandsch, P. Mercea, and O. Piringer, "Modeling of Additive Diffusion Coefficients in Polyolefines," in S. J. Risch, ed., *Food Packaging – Test Methods and Applications*, ACS Symposiun Series 753, American Society, Washington, DC, 2000, pp. 27–36.
8. W. Limm and H. C. Hollifield, *Modeling of Additive Diffusion in Polyolefines*, **Food Add. Contam. 13**(8), 949–967 (1996).
9. A. Baner and O. Piringer, "Partition Coefficients" in A. Baner and O. Piringer, eds., *Plastic Packaging – Interactions with Food and Pharmaceuticals*, Wiley-VCH Verlag, Weinheim, 2008, pp. 89–121.
10. T. Begley, L. Castle, A. Feigenbaum, R. Franz, K. Hinrichs, T. Lickly, P. Mercea, M. Milana, A. O'Brien, S. Rebre, R. Rijk, and O. Piringer, *Evaluation of Migration Models that Might Be Used in Support of Regulations for Food-Contact Plastics*, **Food Add. Contam. 22**(1), 73–90 (2005).
11. Commission Directive 2002/72/EC relating to plastic materials and articles intended to come into contact with foodstuffs (6 August 2002).
12. European Commission, *Practical Guide–A Practical Guide for Users of European Directives*, (updated on 15 April 2003).
13. European Food Safety Authority, *Note for Guidance for Petitioners Presenting an Application for the Assessment of a Substance to be used in Food Contact Materials prior to its Authorisation*, (updated on June 2006).

14. MIGRATEST Lite 2004, A software to estimate the migration from polymeric packaging into foodstuffs and food simulants, FABES Forschungs-GmbH, Schragenhofstrasse 35, D-80992 Munich, Germany.
15. SMEWISE, MULTITEMP, MULTIWISE, INRA-CPCB, Moulinde de la Housse, B.P. 1039, F-51687 Reims Cedex 2, France.
16. Prediction of Specific Migration from Packaging Material into Food, Swiss Federal Office of Public Health, Division of Food Science, Bern, Switzerland.
17. MIGRATEST©EXP 2008, FABES Forschungs-GmbH, Munich, Germany.
18. Regulation (EC) No 1935/2004 of the European Parliament and of the Council on materials and articles intended to come into contact with food and repealing Directives 80/590/EEC and 89/109/EEC (27 October 2004).
19. Council Directive 84/500/EEC on the approximation of the laws of the Member States relating to ceramic articles intended to come into contact with foodstuffs (15 October 1984).
20. Commission Directive 2007/42/EC relating to materials and articles made of regenerated cellulose film intended to come into contact with foodstuffs (29 June 2007).
21. Council Directive 82/711/EEC laying down the basic rules necessary for testing migration of the constituents of plastic materials and articles intended to come into contact with foodstuffs (18 October 1982).
22. Council Directive 85/572/EEC laying down the list of simulants to be used for testing migration of constituents of plastic materials and articles intended to come into contact with foodstuffs (19 December 1985).
23. Commission Directive 93/8/EEC (15 March 1993).
24. Commission Directive 97/48/EEC amending for the second time Council Directive 82/711/EEC laying down the basic rules necessary for testing migration of the constituents of plastic materials and articles intended to come into contact with foodstuffs (29 July 1997).
25. Commission Directive 2007/19/EC amending Directive 2002/72/EC relating to plastic materials and articles intended to come into contact with food and Council Directive 85/572/EEC laying down the list of simulants to be used for testing migration of constituents of plastic materials and articles intended to come into contact with foodstuffs (2 April 2007).
26. Office of the Federal Register, National Archives and Records Administration, *Code of Federal Regulation: Foods and Drugs*, U.S. Government Printing Office, Washington, DC, 2008.
27. U.S. Food and Drug Administration – Center for Food Safety & Applied Nutrition, Guidance for Industry, *Preparation of Food Contact Notification and Food Additive Petitions for Food Contact Substances: Chemistry Recommendation*, 2002.

General References

G. L. Robertson, *Food Packaging – Principles and Practice,* CRC Press, Boca Raton, FL, 2006.

O. G. Piringer and A. L. Baner, eds., *Plastic Packaging – Interactions with Food and Pharmaceuticals*, Wiley-VCH Verlag, Weinheim, 2008.

K. A. Barnes, C. R. Sinclair, and D. H. Watson, eds., *Chemical Migration and Food Contact Materials*, Woodhead Publishing Limited and CRC Press LLC, Cambridge, UK, and Boca Raton, FL, 2007.

H. Zweifel, ed., *Plastics Additives Handbook*, Carl Hanser Verlag, Kempten, 2001.

EFSA, available at http://www.efsa.europa.eu/EFSA/efsa_locale-1178620753812_home.htm.

BfR, available at http://www.bfr.bund.de/.

FDA, available at http://www.fda.gov/.

MILITARY FOOD PACKAGING

RAUNO LAMPI
Consultant,
Food Science, Engineering,
Food Service Systems,
Westborough,
Massachusetts

INTRODUCTION

The packaging requirements for military food service range from: prevailing commercial practice for food prepared and consumed on permanent state-wide stations, stabilized foreign theater sites, and shipboard; to highly durable concepts for mobile combat troop usage for both groups and individuals. This review will emphasize those packaging practices required for the initiation and conduct of a significant combat campaign. For the United States, historically and currently, these have been overseas and have represented a wide range of package challenging environments and food usage conditions.

Since hostilities may occur anywhere in the world and it is impractical to design specific packaging for large volume use for any defined geographic and/or climatic region and it is propitious to pre-position selected rations around the world for immediate local availability, military food packaging must be basically selected and designed for any and all climates or geographic regions. The packaging must also provide long-term protection to make prepositioned war reserves feasible. Further general requirements include compatibility with the mode of use: feeding in groups, singly, or during patrols. Specialized packets or supplements are needed for emergency use or unusually extreme climates. Organoleptic acceptability is essential, and packaging plays the key role in assuring that this desirable characteristic exists at time of food consumption.

Doctrinally, the practice is to use combat rations (as individually packaged meals or packets) for an initial period, say three weeks, followed by the introduction of bulk shelf-stable foods (currently termed B rations) to be prepared in company-sized mobile or temporary field kitchens. As utilities become available and as operations in the theater become stabilized, the master menu for group feeding will include perishables—vegetables, frozen meats, eggs, and so on (the A-ration). Of course, this means that climate controlled storage and freezer storage have become available. The type of packaging is partially changed to be less protective. For example, solid fiberboard becomes replaced with weather-resistant corrugated fiberboard and, for some items, standard commercial packing. The rigors of transportation and handling have, accordingly, become less strenuous. Combat rations for patrols and similar combat excursions and for remote outposts remain an essential part of the subsistence mix.

In actuality, based on informal yet direct feedback, the doctrine is rarely followed. Combat rations are used beyond the Surgeon General's recommended time limit. Standard mobile kitchens are underutilized. Much recent operational theater food service has been contracted to civilian concerns. So the packaging level, that is, the level of protection prevalent, with the exception of combat rations, varies.

THE REVOLUTIONARY WAR TO WORLD WAR II

Koehler (1) and Conference and Notes on Rations, QMS, January 1949 (2) have presented comprehensive reviews of military rations from the Revolutionary War era (1776) to the World War II era (1945). Moody (3), also starting with the Revolutionary War, has extended the review, excellently, to status and development effort to the year 2000. Military packaging, up to 1936, was primarily limited to common practices that defined commercial quantities and some protection from weather elements and dirt. Food preservation, with the exception of some canned items, was the result of curing, salting, and/or dehydration. There was minimal reliance on packaging to preserve edibility. The military diet was supplemented by live animal slaughter and foraging where possible.

In the early 1800s, Nicholas Appert established that heating food in a hermetic container preserved the container's contents, an initial event where the package was vital for high moisture food's safe storage and retained edibility. Canning was born; however, it was not evident in military rations until the Civil War era (1860s on) when some canned items were introduced, but with many defects and complaints. The high level of spoilage of both fresh and canned foods continued into the 1890s, according to reports from the Spanish-American War.

Again following Koehler's treatise, canned items finally became standard ration components in World War I. At this time, it was also recognized that rations needed to be categorized according to their intended field usage. This resulted in design of a menu for group feeding and an organization of components for individual's to carry and consume in the field. These were (1):

1. Reserve ration: food allowance for one man for one day consisting of
   a. One 1-lb (usually cylindrical) can of meat
   b. Two 8-oz cans of hard bread
   c. 2.4 oz of sugar
   d. 1.12 oz of ground coffee
   e. 0.16 oz of salt
2. Trench ration: food for 25 men in the field for one day consisting of
   a. Sufficient canned meats (roast beef, corned beef, salmon, and sardines) to feed, heated or cold, 25 men
   b. Supplemental items that included salt, sugar, soluble coffee, solidified alcohol, and cigarettes

All components were packed in large galvanized containers that protected the contents from poison gas.

3. Emergency ration: food to sustain a soldier when no other sustenance was available consisting of
   a. Three 3-oz cakes of a mixture of beef powder and cooked wheat
   b. Three 1-oz chocolate bars
4. Packaging consisted of an oval lacquered can to fit into a soldier's pocket. Ration categorization evolved so that in the late 1920s, the American Army listed four types of rations:
   a. Garrison
   b. Travel
   c. Reserve (replacing the emergency ration)
   d. Field (in essence, the first true emergency ration)

This categorization exercise surfaced the need and efficacy of designing rations to fit the major modes of theater of operations activities—personnel on attack, in garrison, on patrols, and in unanticipated situations. These basic definitions were the foundation of military food service until the current categories of A, B, and combat rations came into official use. Ensuing developments within the categorization have been impacted by packaging improvements integrated with innovative processes, reliable refrigeration, freeze-drying, irradiation, high-barrier packaging materials, container ship and aircraft delivery, an acceptance of flexible packaging in lieu of rigid cans for shelf stable foods.

WORLD WAR II AND KOREAN CONFLICT

Although the need for organized ration development, including significant packaging, packing, and unitization improvements, was surfaced in World War I, no meaningful action was taken until the advent of World War II became obvious in the late 1930s. This peacetime lack of urgency and support for military readiness is typical and recurring. At this time, among the first steps forward were the establishment of the Quartermaster Subsistence Research and Development Laboratory and, later, to facilitate technical assistance from the commercial food sector (then centered in the mid-west) and to accommodate the needs of all service elements, the establishment of the Food and Container Institute for the Armed Forces on Pershing Avenue in Chicago, IL. Moody (3) covers the evolution of the integration of commercially available technology and food industry support as mutual benefits surfaced. Frequently the military's research and development efforts provided industry with commercially viable products.

As subsistence research and development intensified, the Research and Development Associates (a technical organization of industry and government technologists) and various Technical Committees of the National Research Council were used to recommend, to contribute, and to analyze the military's needs and technical performance. Packaging and Packing interests were active participants and contributors.

An initial output from this concerted ration development was the D ration: three 4-ounce bars of chocolate, sugar, dry milk, cacao fat, oat flour, and flavoring meant to support a person for one day. Packaging, since there is no specific discussion, was probably aluminum foil for individual bars packed in Kraft board cartons for shipment and handling. The D ration was convenient and termed tenuously the first modern emergency ration.

The D ration had a short yet voluminous procurement span, 600,000 rations in 1941 and 170 million through its final procurement in 1944. Misuse as a combat food and its non-provision of three full, familiar nutritionally balanced meals per day found it being relegated to being a supplement and an emergency ration.

The experience with the D ration, reinforced by the evolving recognition of adequate nutrition and menu variety in assuring ration acceptance and combatant performance, resulted in the development and fielding, predominantly for World War II, of the K and C rations. Both were used throughout World War II.

There is some disparity as to when the C ration assumed an identity. Basically, the components of the C ration, in 12-oz, three-piece heavily tinned metal cans, evolved from World War I individual items. In 1939, the Adjutant General of the Army announced adoption of field ration C to consist of three cans containing meat and vegetable components and three cans, termed B units, containing crackers, sugar, and soluble coffee. In early 1944, separate component specifications were consolidated into a single document, "Ration, Type C, Assembly, Packaging, and Packing" where three canned meat entrees and three B unit cans were supplemented with a flexibly packaged accessory packet of sundries that included a small folding can opener, essential to open the durable, thick-tinned, three-piece double-seamed cans. Ration components were packed in Kraft board cartons, which in turn were packed six to a solid fiberboard shipping case.

The C ration easily met the shelf-life requirement of three years at 80°F, as evidenced by reports of rations issued far beyond their procurement dates. Organoleptic acceptability and variety were lacking.

The K ration was developed to provide an individual, easy-to-carry ration, initially requested by the U.S. Air Force, and as its acceptance grew, it was, in 1942, adopted for all service use, termed Field Ration, Type K. Per Moody (3) it became the ration of choice in World War II and for a while was quite popular. However, as noted by Koehler (1), an improved C ration diminished the K's usefulness and popularity; it was declared obsolete in 1948.

The K ration went through seven revisions/improvements, including packaging, before the final specifications were published. Menus were divided into breakfast, dinner, and supper units. Aside from minor variations, each meal menu consisted of a can of meat or cheese, two biscuits, and what would best be called an accessory bag (fruit or chocolate bar, beverage powder, confections, chewing gum, spoon, and key can opener). For each meal assembly, cans were held in a chipboard sleeve-type box; the remaining cans were held in a laminated cellophane bag. These two units were assembled and sealed in a waxed carton that was, in turn, enclosed in a non-waxed outer carton suitably labeled with the K-ration design and color. Twelve complete rations were packed in a fiberboard box that was overpacked in a nailed wood box (1).

DEVELOPMENTS LEADING TO CURRENT RATIONS

Because of (a) both actual and perceived deficiencies with the C ration and its clone-like successor, the Meal, Combat, Individual (weight, variable acceptability), (b) issue of many of these rations to troops after the ration's intended shelf life had expired, (c) need to explore the applicability of newer technologies in both food processing and in packaging materials and designs, and (d) accommodation to the military's highly mobile combat tactics, in the late 1950s the Army issued a request (Qualitative Materiel Development Objective) to improve combat rations. The Army's needs were supported by the U.S. Marine Corps and acceded to by all DOD elements under the jurisdiction of the Joint Formulation Board of the DOD Food Research, Development, and Engineering Program.

The significance of a DOD-level program and funding bears mention. It provides greater assurance that funding support will not be siphoned off prior to its reaching the working level and acknowledgment that all service personnel basically eat the same food. The implementation of the program was assigned to the then-titled U.S. Army Natick Research, Development, and Engineering Center, Natick, Massachusetts (commonly referred to as Nlabs). This progressive doctrinal and regulatory support was steady and consistent as needed for aggressive, thorough, and inevitably long-term (10–15 years) developments and their implementation.

Among the desired improvements for combat rations established under the aegis of the DOD Food Program and further detailed in an Army Combat Development Objective Guide (CDOG) in 1956 were lighter weight, ease of use and carrying by the individual, long shelf life, universal organoleptic acceptability, durability during transport and use in any geographic area or climatic condition, and adequate survivability on free-fall air drop.

During this time frame, mid-1950s to the late 1960s, three food technological areas were identified that could possibly be responsive to the military's combat ration needs. These were: freeze-dehydration, irradiation sterilization, and substitution of flexible packaging for rigid containers for both the preceding preservation techniques and its application to thermoprocessed foods. All three areas were amenable to the consideration of flexible packaging in lieu of traditional rigid metal cans.

FREEZE-DRIED RATIONS

For the military, freeze-dried (lyophilized) foods had obvious advantages: extremely light weight, excellent retention of organoleptic characteristics, long shelf life (if properly packaged to exclude oxygen), rapid rehydration, and suitability for flexible packaging in configurations that could be carried in the combatant's gear or clothing.

During the Vietnam conflict (1960s and early 1970s), a Packet, Long-Range Patrol (aka LRP) was fielded and highly accepted by personnel, primarily during reconnaissance missions and combat excursions. Entrees were "ready-meals"—a high-protein component, meat mostly, combined integrally with starch and/or vegetables and a sauce. Beef stew would represent such an item. Initially, and for most of the Vietnam campaign, components were individually freeze-dried and combined just prior to packaging. It was established that pre-packaging combination and cooking into partitionable servings improved acceptability, and later packets were so prepared and packaged.

During the active years of the Vietnam conflict, LRPs remained popular and elicited much positive feedback on quality and usage. Anecdotal comments, however, did include (a) reluctance by combatants to use water that they had to carry (canteen-full) in any way other than direct consumption and (2) some reports that when, for convenience, water was added to the packet at the start of a patrol; that is, several hours before consumption, microbial growth occurred and caused problems after entree consumption.

As the Vietnam conflict neared its end, the use and popularity of the LRP declined. High-quality entree components became more difficult to procure and costs rose. The LRP remained in the system at a low interest level. Then, in the 1990s, improvements were re-energized by the U.S. Marine Corps' need for a ration for extreme cold environments, and the U.S. Army Special Operational Forces' need for a long shelf life restricted calorie ration (back to the original LRP concept) for initial assault, special operations, and long-range reconnaissance missions. This reborn ration is now termed the Meal, Cold Weather/Food Packet, Long-Range Patrol (MCW/LRP), expanded as a meal to include crackers, spreads, cookies, sports bars, nuts, candy, and powdered beverages, and packed in a white (MCW) or a beige (LRP) outer polyethylene meal bag. There are 12 meal menus. Sixteen ounces of water (preferably heated) is required for all meals except those with eggs, which require 8 ounces. Another 12–24 oz of water are required for beverages.

The package for the entree is brick-shaped (Figure 1) when full and is designed for in-package rehydration and food consumption. Beverages can be prepared in the canteen cup; heat tablets are furnished.

Freeze-dried products require protection from water vapor (products are strongly hygroscopic) and air (oxygen) because of extensive exposed surface areas, and they also require some protection of structural integrity (to some degree, provided by immobilization in flexible, vacuumized packages). From the user's aspect, the ration package must provide a shelf life of a minimum of three years at 80°F and 6 months at 100°F. It must retain its form to serve as an easily opened rehydration and consumption container.

Two film structures are specified in Table 1.

Bonding of the sealant layer to the aluminum barrier layer (film 1) is to be by lamination or by extrusion coating. The barrier is in turn bonded to an outer layer of biaxially oriented nylon layer with 10 pound per ream low-density polyethylene. For film 2, the sealant ply is laminated or extrusion-coated to a nylon ply, followed by lamination to the foil that is bonded to an external polyester (usually polyethylene terephthlate) ply. The requirement for heat seals mentioned that the low-density heat sealant layer shall be capable of forming a fusion seal or shall be heat sealable and peelable. A peelable seal would suffice for the outer polyethylene meal bag, but the seals of the component brick-shaped pouch are more critical and should be fusion seals. As summarized by Lampi et al. (4), nonfusion seals can meet tensile and

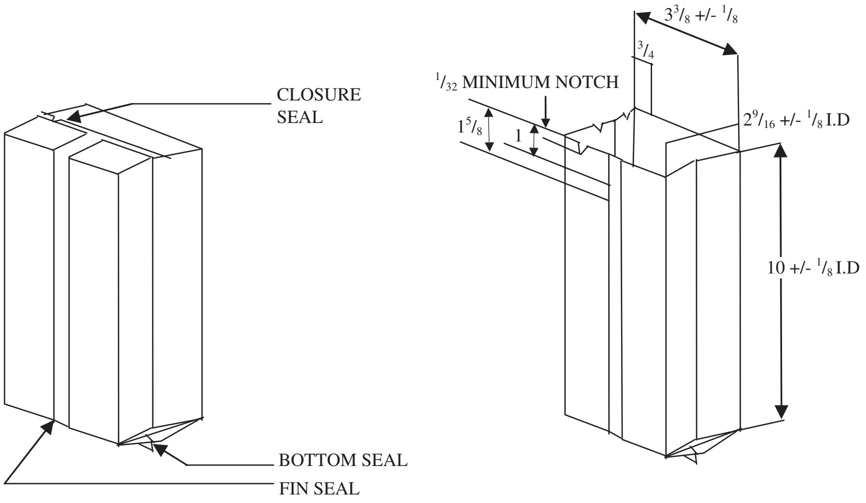

AFTER CLOSURE SEAL

BEFORE CLOSURE SEAL

Figure 1. MCW/LRP packages for entrée.

Table 1. Two Film Structures

	Film 1	Film 2
Inner scalant layer	0.0035-in. linear low-density polyethylene	0.0035-in. linear low-density polyethylene 0.0006-in. biaxially oriented nylon
Barrier	0.00035-in. aluminum foil	0.00035-in. aluminum foil
Outer abrasion protection	0.006-in. biaxially oriented nylon	0.0005-in. polyester

burst test criteria at time of creation yet fail with time and exposure to rough handling.

Pouch construction, filling, and final sealing follow standard practice. Some major requirements are:

1. Minimum heat seal width: 0.25 in.
2. Fusion seal tensile strength: 7 lb per linear inch
3. Vacuum level, at which filled pouches are sealed: 23 in. of mercury

Defects and acceptance standards and criteria are given in detail in the “Packaging Requirements and Quality Assurance Provisions for Dehydrated Product in a Brickpack Pouch.”

IRRADIATED FOODS

During the gestation period of freeze-dried food development and early feasibility probes into flexible packaging for thermoprocessed foods, the preservation (i.e., to commercial sterilization standards) of foods, including combat ration entrees, by ionized radiation warranted exploration. The anticipated advantages included very high quality shelf-stable entrees with minimum destruction of nutritive value, compatibility with a range of packaging options from flexible pouches to rigid metal containers (in other words, from combat rations to B, and possibly A ration usage), and commercial viability to provide a basis for reasonable costs during procurements.

For military rations, irradiation treatments (X ray, gamma, and electron beam) were applied at high enough levels to provide commercial sterility—that is, doses up to 60 kGy, the universal criterion for long shelf-life storage. To assure achieving this long-term stability, multiple-ply foil containing materials were used—not radically different in composition and structure from those for freeze-dried or thermoprocessed foods. Irradiation was performed with packaged items.

Packaging materials for irradiation have some singular requirements, namely:

1. In final filled package configuration, retention of integrity when frozen to temperatures as low as −50°F and held at those temperatures during the irradiation step.
2. Minimal chemical changes and/or creation of undesirable extractives in the packaging materials as the result of irradiation. These changes might be cross-linking, which could beneficially reduce migration; or, inversely, they might be degradation to lower-molecular-weight elements (radiolysis products) with increased migration into the food.
3. Retention of package performance criteria—heat seal integrity, absence of delamination, survivability through the transportation and field-handling trail, and retention of these properties over the desired shelf-life time span.

The effect of high-dose irradiation on food, candidate packaging films, and packaged irradiated foods (i.e., the final product) has been extensively investigated and the findings periodically scientifically and conscientiously reviewed. The first materials (5) approved for high-dose (up to 60 kGy) packaging of irradiated foods in 1965 and 1967 were:

1. Vegetable parchments
2. Polyethylene film
3. Polyethylene terephthlate (PET) film
4. Nylon 6 film
5. Vinyl acetate–vinyl acetate copolymer film

Radiation-preserved packaged food items were technically established as totally safe and nutritionally adequate, and consumer-oriented taste testers found items acceptable.

However, the progression of high-dose irradiated foods to either full-scale military or commercial usage is yet to occur. Reasons implicated are: the existence (at least in the United States) of an extensive established refrigerated and frozen-food chain; the reluctance of investors to establish costly manufacturing facilities without assurance of a desirable, potentially flourishing market (the old paradoxical question, What comes first, the chicken or the egg?); significant consumer reluctance to believe that the process is safe, in spite of the massive data proving it safe; and limitation of the process to meat items.

Although irradiated foods are suitable for inclusion in military rations, none, with the exception of South Africa, are currently included. No adequately sized production capability for the volumes that would be required exists.

However, the U.S. Army Soldier Systems Command (Natick, Massachusetts) has been furnishing (in lots of 200 or so) irradiated meat entrees (beef, poultry, pork, and lamb) to NASA for space applications. Earlier regulatory agency approvals listed above, because of the development of newer materials and material analysis techniques, are no longer valid. Loveridge and Milch (6) reflect the current status of packaging for NASA programs. They evaluated five commercially available film structures, all without current formal FDA approval for irradiated food entrees, but exempt for sole NASA usage and suitable for similar food process applications. Of the five materials, the two most readily commercially available were:

1. A new MRE pouch material (termed Quad since it now had four plys) – fabricated from outer to inner ply of polyester/nylon/aluminum foil/polypropylene.
2. The material used by South Africa – outer to inner ply: nylon/aluminum foil/polyester/linear low density polyethylene.

Three other multi-ply film constructions were also evaluated; these had some potential for use with irradiation – sterilized foods.

NASA-specific entrees were put through the entire process: filling, vacuum evacuation, sealing, cartoning, dry ice freezing and shipping, irradiation at 44 kGy, thawing, and return shipment.

Testing included seal strength, leak tests, drop and vibration tests, frozen pouch abuse, and internal pressure resistance. Criteria were those of the now massively produced Meal, Ready-to-Eat, combat ration. If high-dose irradiation of foods, already proven safe, becomes prevalent and costs are reasonable, packaging materials for military entrees would require re-approval and would likely be constructed with aluminum foil and the polymers or their successors listed above. Bonding of plies would be by coextrusion. A possible variant would be the inclusion of sealable polyethylene terephthlate (PET) as the inner layer. In short, flexible packaging for irradiated entrees to enter the Meal, Ready-to-Eat matrix would in all likelihood be readily approved and available.

THERMOPROCESSED FOODS IN FLEXIBLE PACKAGES

While packaging (predominantly the use of multi-ply flexible films) was being defined for freeze-dried and irradiated foods that were intended for combat use, studies were initiated with the aim of replacing the traditional cylindrical metal cans for standard thermoprocessed combat ration entrees with high barrier flexible polymeric films. The first probings to do this were probably in the late 1940s; however, the first formal publication of experiments with thermoprocessing common foods in flexible films was by Hu in 1953. The military, noting potential functional advantages (per their CDOG) for combat rations furthered these studies, initially reported by Keller in 1959 (cited in reference 3). After initial positive indications, these studies grew into a major development project culminating in the procurement of a new combat ration, the Meal, Ready-to-Eat, Individual (MRE) initially procured in 1979 (3). It is now the basic U.S. combat ration.

Some initial decisions and considerations that drove the direction that the development effort would take were as follows:

1. An aseptic processing and packaging approach would have alleviated the burden of performance on the film and its formed package (specifically resistance to process temperature as high as 265°F), but aseptic systems had no industry acceptance; and to undertake its technical development (to include solids) and gain processor, regulator, and consumer trust was felt to be prohibitive at that time. The decision was to proceed with the traditional post-fill-and-seal thermoprocessing.
2. Although conceivably prematurely at that stage of the state of the art, the manufacturing system was visualized as a blend plus modification of equipment already in use for forming, filling, and sealing for the frozen food industry and thermoprocessing principles and equipment for "canned" foods; that is, the need for radically new equipment was not anticipated. A need to tighten performance was accepted. As a result, a new technology evolved.
3. The military could not replicate the technology existing in the flexible film formulating and converting industries and would have to entice those industries' support by cooperatively revealing commercial opportunities and/or providing monetary support.
4. The package design would be a flat four-seal pouch—no gusset or vertical center seam (pillow pack) design—that is, avoidance of unnecessary loci for leakage. If a horizontally drawn form–fill–seal package concept were to evolve, it would be considered. It was assumed that on-line pouch forming or the use of preformed pouches would be suitable.
5. If successful, the replacement of the can with a pouch (retort pouch) would offer significant advantages; this provided a strong mission-oriented incentive to proceed. Briefly, these included:
   a. lighter weight: 1.5 pounds per meal in the shipping case
   b. easy to open: side seam tear notch or two
   c. improved palatability: flat thin shape precludes overcooking the periphery to assure sterility of the geometric cold spot
   d. easy to carry: fits field clothing pockets; flat in the rucksack
   e. durable:
      - during combat field movement
      - for air drop
      - all forms of transport
      - all climates
   f. storable: shelf life suitable for war reserve materiel usage
   g. producible:
      - materials
      - form, fill, seal process
   h. heatability: in water in canteen cup (*Note*: A flameless ration heater was later developed and incorporated into each meal.)

From the earliest feasibility and field performance tests, the packaging film producing and converting industries responded with proprietary film developments and participative support effort with the military researchers. Among these firms were: Reynolds Metals, Flexible Packaging Division of the Continental Can Company, Dow Chemical, American Can Company, and Morton Chemical Company. Reynolds Metals went so far as to establish a pilot production line for vegetables. A tangible recognition of this military–industry cooperation was the receipt of the Institute of Food Technologists' Industrial Achievement Award in 1978 jointly by Reynolds Metals, Continental Can Company, and the U.S. Army Natick Research, Development, and Engineering Center.

There were foreign developments, more or less paralleling those by the U.S. military. Although some of the developments were proprietary, there was considerable interchange of experiences through visits and joint technical sessions. Among those nations known to be probing flexible packaging for thermoprocessed foods were Japan, United Kingdom, Italy, Sweden, Germany and Canada. These foreign developments were oriented more toward commercial markets than toward military. Japanese and Italian representatives cited commercial successes.

The U.S. military's program can be visualized in four general development phases. During all phases the program was supported by laboratory activities to develop quality assurance tests and performance criteria. Overall, as previously stated, from concept acceptance to ration fielding (i.e., the four phases) took 20 years. Early in the program, field tests revealed that if made properly, the retort pouch performed well, but the tests also revealed that the form–fill–seal–process system and product formulation required technical and engineering modifications and improvements. This was to be truly an integrated product-package development. This took time. The development phases were as follows.

Feasibility Testing

This phase included selection of candidate films; laboratory and small pilot plant size preparation of entrees (Figure 2); informal field evaluation via such activities as carrying carton-enclosed pouched items in combat clothing pockets over a clothing-wear obstacle course (including prone position crawling over obstacles); initiation of storage tests; vibration and drop test cycles simulating transport abuse; and initial organoleptic acceptability evaluations. Extractives studies to meet Food and Drug Administration regulatory standards were performed, submitted, and accepted. The basic structural requirements of the film were established: a 0.004-in. sealant and basic strength layer, a 0.0005-in. aluminum foil oxygen/water vapor barrier, and an outer 0.0005-in. protective layer. The pouch at this initial stage of development enclosed and adhered to a kraft board envelope-folder.

The initial sealant layers were polyvinyl chloride (PVC) or a medium- to high-density polyethylene (HDPE) modified with polyisobutylene, each film bonded to the foil ply by an isocyanate adhesive system. As the result of occasional off-flavor transfer and delamination, the PVC material was replaced by the proprietary HDPE blend.

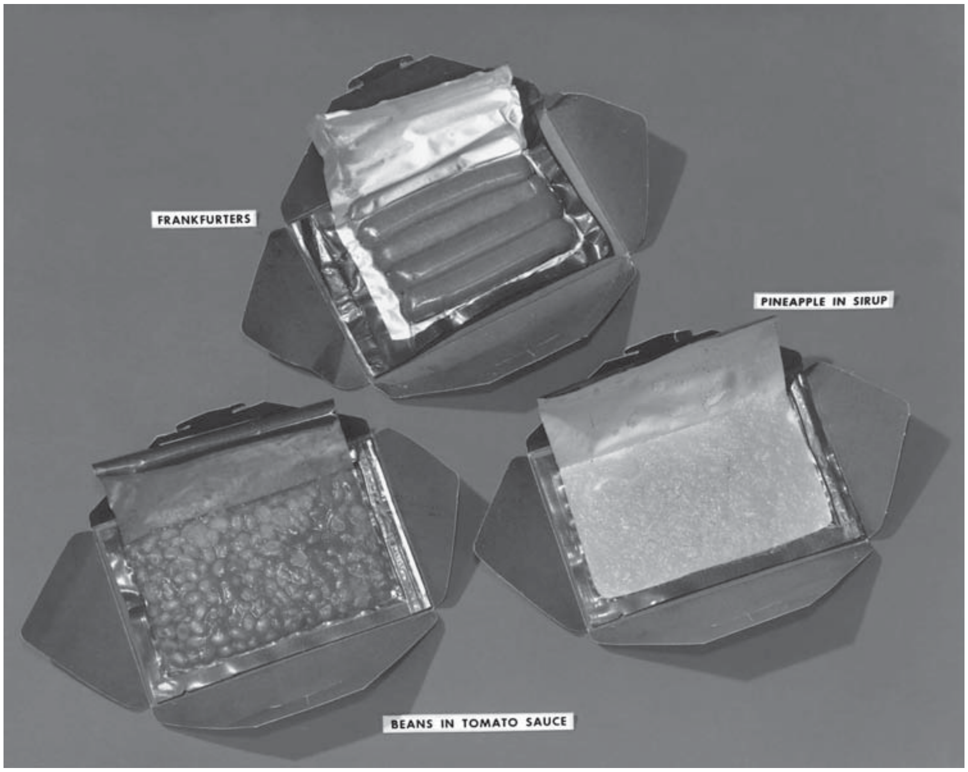

Figure 2. Thermally processed items. Early retort pouch items (for the MRE), opened to display typical items. Current ration of 24 menus contains 40–42 thermoprocessed entrée items in flexible pouches.

Where feasible and comparatively valid, pouch performance was compared to MCI canned entrees. The pouch performed well.

Initial Field Tests

The limited feasibility tests were promising enough that more extensive troop usage field tests were carried out—in Louisiana, Georgia, Arizona, and Alaska. These tests were more formal; that is, they were carried out independently by the Test and Evaluation Command (TECOM). The Nlabs, the developer, could only act as observers. Based on TECOM test personnel and user-documented assessments, the retort pouch performed satisfactorily. The material used featured the HDPE blend as the sealant ply. Failures were few and mostly related to closure seal defects; that is, irregularities and leaks caused by product caught in the seal area.

Palatability was assessed by ratings on a 1–10 (inedible to highly liked) hedonic scale by the users. The control for all aspects of these tests was the can in the Meal, Combat, Individual (MCI). Perhaps the most valid indication of acceptability was the free choice of the pouch over the can following tests in Alaska—that is, a choice with no hint of a Hawthorne effect.

The overall conclusion was that the retort pouch was acceptable for combat rations, but the failure rate (primarily defects in the closure seal area) was too high for a thermoprocessed food package.

Production Capability

Based on the field test revelation that filling and sealing flexible pouches with original high water content fluid, semisolid, and one-piece solid foods remained a significant performance and reliability problem, a decision was made to establish a pilot line of full-sized equipment, alter and/or add functions to improve performance, and run diverse representative food items in adequate amounts to provide valid reliability data (in terms of low percent failures). This approach would also provide future production monitors an experience base for assisting contractors in start-ups and in correcting production deficiencies. It would also test quality assurance sampling and test protocols. Under contract, a so-called Natick–Swift production Reliability Program was established. This program was carried out by a consortium headed by Swift and Company, with membership by Continental Can Company, Pillsbury Company, FMC Corporation, and Bartelt packaging machinery company. The package design was the four-side seal and was formed online from a roll stock of 75-μm-modified polyolefin (blend of polyisobutylene with medium- to high-density polyethylene) as the sealant ply, a 9-μm aluminum foil barrier, and 12-μm polyethylene terephthlate (Mylar) as the outer layer. Six diverse products were run: covering those considered pumpable into formed pouches (beef stew, pineapple); solids termed placeable (beefsteak, four frankfurters in one pouch); and viscous items termed extrudable (fruitcake, combination ham and chicken loaf). Overall results were a 0.002% seal-failure rate and a 0.016% closure-seal-contamination failure rate for 298,971 packages.

As reported by Lampi et al. (4), the Natick–Swift Reliability program revealed an overall outgoing seal defect rate of 0.017%. Tsutsumi (7) reported a final pouch defect rate of 0.02% in Japan. Nughes (8) reported similar rates in Italy. If one accepts a failure rate of 0.1% as published for the ordinary can, the pouch appeared to meet commonly accepted reliability standards.

The description of the line and results of its usage to pack six diverse products are described in the Proceedings, Symposium on Flexible Packaging for Heat Processed Foods (1973) sponsored by the National Academy of Science, National Research Council. Each participant detailed their task and its results. Overviews of results are included.

As briefly stated earlier, other pilot and manufacturing lines had been established. Systems, circa 1977, are summarily described by Lampi (9). Tsutsumi (10, 11) covers a Japanese approach. Goldfarb (12, 13) describes the Reynolds Metals system, the use of which is covered by Mermelstein (14). Although these production systems were not directly oriented to military use, their successful functioning reinforced confidence in the feasibility of the pouch for U.S. military rations.

As mentioned previously, laboratory tests and other supporting activities were ongoing during the general development phases. These were conducted with two films: One of them was used in the comprehensive Reliability Program; which was modified high-density polyethylene (HDPE), the other had polypropylene (PP) as the sealant layer. The latter had surfaced as an applicable film in usage paralleling the use of HDPE in separate but similar activities. Details of the many tests and developments are covered by Lampi (9), and those associated with seal performance are discussed by Lampi et al. (4). Among the activities and findings are

Extractives Studies. Extractives studies were carried out to establish that no meaningful contaminants were migrating from the packaging materials into package contents. Initial approvals were obtained; and in a later general review (15) of the status of the program submitted to regulatory agencies before fielding, no extractives problems were identified. However, just before the military was to start procurement, the FDA reported the presence of 0.3 to 3.0 ppb of toluene diisocyanate migrating into products. This caused a roughly five-year delay (1975–1980) while coextrusion as a bonding technique was finalized, assessed for migratory safety, and put into use. Then, procurement of the MRE began.

Storage Stability. Storage studies were carried out on representative products, such as ground beef in barbeque sauce, pork sausage, and ham and chicken loaf (containing ingredients apt to penetrate polymeric films), and with two films (HDPE and PP) to assess product organoleptic stability and to measure the effects of time and temperature on package seal tensile strengths and seal and body area bonding. Storage temperatures were 71.6°F and 100.4°F. Criteria at that time (1969–1973) were four years at 71.6°F and six months at 100.4°F (currently three years at 80.6°F).

The foods passed storage organoleptic stability criteria on the basis of periodic hedonic ratings and in some comparisons with like products in traditional cans. Seal area tensile strengths and laminate bondings held up very well over 27-month-long storage at 71.6°F and 100.4°F (16).

Resistance to Rough Handling. Retort pouches with HDPE and PP sealant layers and containing fluid and semifluid products were compared to like products in cans when exposed to a rough handling cycle. The cycle was vibration in case lots at 1 G for one hour followed by a series of 10 drops from a height of 46 cm (18 in.) (ASTM D-775-68, Objective B). The treatments were followed by visual examination and microbiological testing via a bio-tester (17). Neither film nor type of product had failures exceeding the can—a tentative performance standard for this type of testing could be 2% or fewer leakers as detected by microbiological testing.

In addition, free-fall airdrop of cases of rations in a field test demonstrated that the pouch met the recovery criterion of 75% useable items.

Indication of Spoilage (Leaking or, More Likely, Underprocessing). With metal cans, swelling (i.e., a convex lid shape) has been traditionally used as a proven indication of microbiological spoilage. Cans and pouches were equally inoculated with gas-producing bacteria through silicone sealant septa and monitored visually for swelling. Obvious swelling of the pouch was doubling of its thickness, easily judged by any user. The pouch showed gaseous swelling in 48 h, while it took the can 72–120 h.

Definition of a "Good" Seal. Based on production experience, early field tests, storage tests, and controlled laboratory tests, the criteria for defining a high-performance seal for retort pouches was established as follows:

1. Fusion must exist.
2. Internal pressure level
    - 20 psig
    - Hold time: 30 s
    - Maximum seal yield: 1/16 in.
    - Restrained pouch thickness: 1/2 in.
3. Tensile strength level
    - 12 lb/in.
    - Crosshead speed: 10 in./min
    - Sample width: 1/2 in.
4. Visual—No visible aberrations.

Fusion exists when the opposing seal surfaces form a weld where neither surface is visually distinguishable when seal area is tensioned beyond the point of failure. The presence of fusion cannot be understated. A polymeric film heat seal can pass all requirements, including tensile and burst tests and general appearance, at the time of formation but based on experience that was not good, such a nonfusion seal will fail on storage. To assist visual judgment of seals, a table of photographs has been assembled showing acceptable and nonacceptable seal surfaces and characteristics (4, 16).

Seal Defect Scanner. In cognizance of the vagaries of human leak defect assessment, an automatic seal defect detection apparatus was devised, built, and tested. The procedure used infrared radiometric scanning of heated seal surfaces. One surface of a seal was heated, and any heat impeded by defects in the seal area was detected on the opposite side by the infrared scanner. Both the heat source and scanner were stationary; the package seal was aligned and passed between these two elements, and packages with defective seals were diverted. Scanning speed was 6 in./s. The apparatus cost was considered high. Another deterrent to its use in the mid-1970s, ironically, was that a criterion for acceptance/rejection was a problem. It was too sensitive, rejecting pouches with very minor seal deformations that did not negatively affect seal integrity.

Leakers. The pouches are currently scanned by humans visually for defects including leaks during and immediately following production. Subsequent leakers are detected by transportation handlers and users visually and discarded. Swollen pouches including those possibly caused by product caking and plugging leak sites are discarded. This procedure fortunately works as evidenced by the 22 years of successful reasonably cost-effective production and use of the MRE at the current rate of 46 million meals per year.

Since the initial consideration of using flexible packaging for thermoprocessed foods, there has been concern over the presence, significance, and reliable detection of leaks. The deficiency of visual inspection (even multiple ones, loss of acuity with time-related fatigue) has been cited as justification to develop online detection devices. A prerequisite to exploring objective leak detection concepts is establishment of criterion (i.e., the smallest leak that needs to be detected).

Finding leaks, on the pouch body or through seals, is governed by two specific characteristics. First, whereas a rigid can exhibits a pressure difference between the outside atmosphere and its contents that could suck contamination through any void into the can, a pouch, on the removal of headspace air, collapses around the contents to a point where no external to contents pressure drop exists. A bio-tester (18) was constructed to create a momentary pressure difference and has been used as the primary bacteria penetration detection apparatus.

Secondly, fluid contents can plug defects and greatly reduce the sensitivity of such detection devices as the Mead Test (pulling a vacuum on a container submerged in water). With dry products, a 5-μm-diameter defect could be detected, while with a pouch filled with distilled water, even a 68-μm hole was not detected. The accumulated knowledge on pouch leaks starting with tests on films per se and ending with production, handling, and field experience through 1979 (the active development period) included:

1. Single plies of polymeric materials contain pinholes that could permit passage of bacteria. A three-ply

construction does not; the statistical chances of three holes coinciding to allow bacterial passage are extremely rare. Candidate polymeric films are not degraded by direct exposure to bacterial concentrations.

2. Manipulation of foil containing laminates results in minute breaks in the thin foil; these breaks do not result in film failure or microbial hazards. The total area exposed by such foil breaks is insignificant in that their effect on water vapor and oxygen transmission is nil.
3. Using a laser (crudely because of their technical infancy) to "drill" minute holes in a three-ply retortable laminate and exposing filled pouches made with this material, each having a "laser hole" to a bacterial "soup" in a tester, a tentative minimum, laboratory-created defect was listed as a 11-μm diameter hole. In perspective, such a hole/defect size is roughly 1/10th the thickness of the packaging material. Because of the small number of samples, no statistically valid conclusion was possible.
4. In one series of tests, retortable materials were subjected to multiple flexing, punctured by a fine sharp needle, and abrasion on a raised peak. Flexing resulted in a porous area that permitted gas flow but could not be defined even microscopically. Puncture by a fire-hardened fine-tip needle resulted in relatively large defects (greater than 100-μm size) that were visually detectable. Abrasion caused a variety of hole sizes, the smallest of which was equal to a 24.4-μm diameter round hole.
5. Pouches that failed during a rough handling cycle, as established by biotesting, were examined microscopically to try to define the size of leak sites. The smallest was $20 \times 15\,\mu m$, the next largest was $20 \times 40\,\mu m$, six were in the 100- to 999-μm range, and 24 were 1000 μm or larger.

Nine defects were undefined or destroyed during pouch opening.

At the time the MRE was accepted as the standard combat ration, the best estimate on leak occurrence was that one package in 100,000 could have a leak smaller than 100 μm.

Leak Detection Methodology. In this Production Capability development time frame, a concerted effort was made to determine if any nondestructive online- or line-associated leak test method could be made to apply to the retort pouch. Spencer and Bodman (19) surveyed 24 conceivably applicable concepts. Criteria were a 30-μm channel through the seal area and a 10-μm defect on the pouch body. For fluid foods, the best candidate was a change in the conductivity of deionized water by product forced out of the package by compression. For solid foods (i.e., beefsteak), a helium tracer gas procedure detected holes as small as 30 μm.

In each case, however, the design of an apparatus to cover handling, preparation for analysis, performing the analysis, and recharging or resetting for the next pouch would have approached the size and complexity of the basic production line.

Implementation and Field Improvements

The Meal, Ready-to-Eat, Individual (MRE) replaced the Meal, Combat, Individual (MCI, commonly and belatedly still referred to as the C ration) in 1975 with the caveat that testing be continued with the U.S. department of Agriculture to confirm that insect penetration would not become a problem. Reportedly, after further exposure to gnawing and chewing insects, there is no problem. Also, at roughly this same time, as cited previously, notice was received from the Food and Drug Administration that 0.3 to 3.0 ppb of toluene di-isocyanate was determined to be extracted by products from adhesives systems used in the lamination of the desire films. Rather than try to cope with adhesives, film suppliers developed coextrusion techniques with approved polymers, and current films are so currently formed.

The MRE, as it is currently configured (Figure 3), consists of entree/starch, crackers, spread (cheese, peanut butter, jam, or jelly), desert/snack, accessory packet (beverages, condiments, matches, gum, toiletries), and flameless ration heater (FRH).

There are 24 menus/12 meals to a case. Each meal provides 1300 kcal. Water requirement is approximately 23 oz to rehydrate beverages. The FRH has been in each meal bag since 1993. Each meal weighs 1.5 lb and takes up 1/12th of a cubic foot in volume.

The first four or five procurements surfaced the need for technical assistance to suppliers, a need for coordinated support by the procurement agency, and the engineering support function of the developer. The production of retort pouched items, although based on a blend of frozen and canned food capabilities, required a higher level of flexible package performance, and new inspection standards, and it was viewed by its proponents as essentially a new technology.

From this rather tenuous start, with strong institutional review, assessment, and support, the MRE has been improved in both individual item quality and menu configuration. Through the year 2004 procurement, MRE XXVI, the ration has been expanded to 24 menus including four vegetarian meals. Since 1993, 150 new items have been approved; 35 least acceptable items have been eliminated. Over 75% of ration components are now non-developmental items—that is, adapted directly from commercially prevalent items. At this time, the ration usage rate is such that storage stability is not a factor of concern. Providing combatants that represent a country-wide demography is paramount. Currently, the MRE usage rate is 46 million meals per year.

Nutritional adequacy, related directly to combatant performance, has been periodically measured. For example, Lichton et al. (20) evaluated the nutritional value of the MRE during a 34-day field exercise (at an elevation of 1800 m). Compared with a control group, those fed only MREs lost weight. Neither group appeared to be dehydrated. Both groups displayed normal values of serum

Figure 3. Meal, Ready-to-Eat, Individual. The large bag, labeled "Meal," contains the rest of the items shown. The light-colored bag is the flameless ration heater.

proteins, vitamins, and zinc, denoting acceptable nutritional status.

The old C-ration cans were heated in water, in an inverted combat helmet, in a canteen cup using heat tablets, or in bulk in water in any large barrel or tank. The advent of the Kevlar helmet removed one common field heating method. Subsequently, after some user skepticism, an effective flameless ration heater was developed and has been in each MRE meal bag since 1993. This 22-g flat card-like heater can heat 200 g of retort-pouched food in roughly 10 min. Any water can be used to activate the heating action. An initial version discharged a small amount of hydrogen, innocuous during use, but considered a possible hazard when multiple cases were transported in a closed container. A new hydrogen-free ration heater has been developed.

After all the technical effort and testing, the MRE, plus the engineering support it requires, has now supported the military person for over 20 years (Figure 4). The current packaging materials and the ensuing pouch used to prepare thermoprocessed ration items are given in Performance Specification MIL-PRF-44073F (Figure 5), Change 3, November 2006.

The skeleton requirements as abstracted from the specification are:

1. Pouch material (from the inside to the outside)
   a. Preformed pouches: 0.003- to 0.004-in.-thick polyolefin, 0.00035- to 0.0007-in.-thick aluminum foil, 0.0006-in.-thick biaxially oriented polyamide-type 6, 0.0005-in.-thick polyester.
   b. Drawn pouch; tray-shaped body of a horizontal form-fill-seal system, tray-shaped body: 0.003- to 0.004-in.-thick polyolefin, 0.0006 inch thick biaxially oriented type-6 polyamide, 0.0015- to 0.00175-in.-thick aluminum foil, 0.0010- to 0.0014-in.-thick oriented polypropylene Lid, 0.003- to 0.004-in.-thick polyolefin, 0.00035 to 0.0007 inch thick aluminum foil, 0.0005- to 0.00075-in.-thick polyester.
2. Pouch configurations are shown in Figure 5, and dimensions are shown in Table 2.
3. Performance requirements are:
   a. Material must be capable of being formed into pouches.
   b. Oxygen transmission rate must not exceed 0.06 cc/m^2/24 h/atm; Water vapor transmission rate must not exceed 0.01 g/m^2/24 h.
   c. Residual gas volume shall not exceed 10 cc for fruit or 20 cc for non-fruit items.
   d. Filled pouches shall withstand a pressure of 20 psig for 30 s.
   e. Postprocessed pouches must withstand abuse at 28°F with a survival rate of 75% and a survival rate of 100% at 160°F.
   f. Pouches including seals must be free of visual defects.
   g. The carton enclosing each pouch needs to conform to Specification PPP-B-566, Boxes, Folding, and Paperboard.

The MRE is constantly being improved and updated—menus and materials. As of 2006, the MRE is destined to continue to be the combat ration for the foreseeable future.

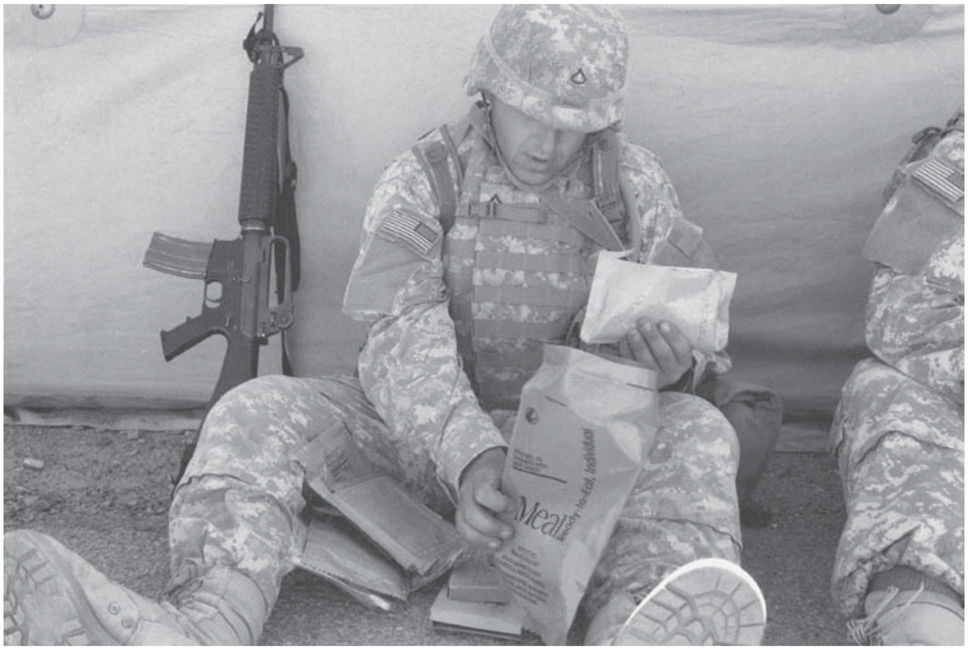

Figure 4. Combatant in the field preparing to eat the MRE.

UNITIZED GROUP RATION (UGR)

When field conditions permit group feeding in small units or even larger congregations, the unitized group ration (UGR) has been designed, tested, and fielded for such situations. The basic objective was to simplify the logistics for supporting small group feeding. The traditional procedure had been to order a slew of food items via individual requests and, similarly, to assemble preparation, serving, and dining ware. That is, for each field operation, a multitude of individual issue requests were submitted and, on receipt of items, rather haphazardly assembled. The UGR is a pre-assembly of all the preparation, dining, and consumable items into a single unit to support a designated number of personnel.

The unitized group ration (UGR) is a program designed to provide the highest-quality group meals to troops in the field by increasing variety, consumption, acceptability, and nutritional intake. It is an efficient method to provide breakfast, lunch, and dinner by packing 50 meals together. There are about 7 breakfast menus and 14 lunch and dinner menus, depending on options, for selection. The pre-mixed selection of menus ensures variety and maximizes consumption by avoiding repetition and ennui. The unitized ration also includes disposable trays, cups, flatware, and trash bags. There are four different group ration options, namely, unitized Group Ration Heat and Serve (UGR-H&S), unitized group ration A (UGR-A), unitized group ration B (UGR-B), and the recently fielded addition to the UGR concept, the UGR-E ("E" for express) featuring self-heating.

UGR-H&S. This option is available for military personnel who are in the worldwide operations and

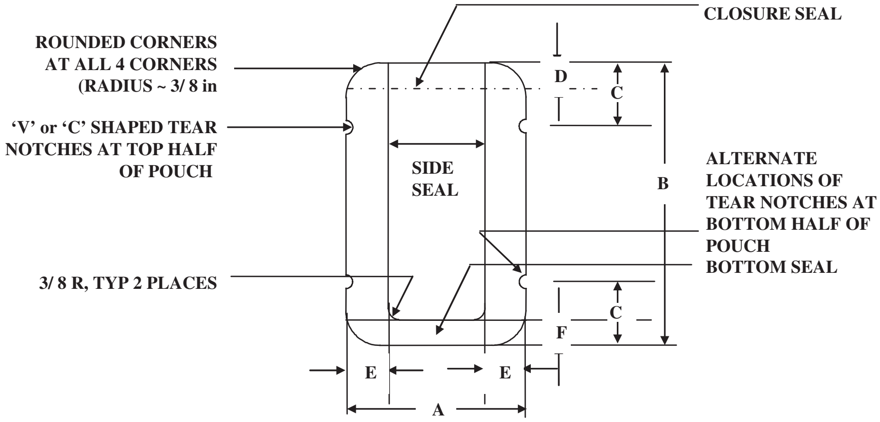

Figure 5. Pouch configuration.

Table 2. Pouch Dimensions

Pouch Sizes	Dimensions (inches)					
	A	B	C	D	E	F
5-oz size	$4\frac{3}{4}$ ($\pm\frac{1}{16}$)	$6\frac{1}{6}$ to $6\frac{1}{4}$	1($\pm$ $\frac{1}{16}$)	$\frac{3}{4}$ max.	$\frac{7}{32}$ min.	$\frac{1}{8}$ min.
		$6\frac{1}{6}$ to $7\frac{3}{8}$	$1\frac{1}{2}$ ($\pm$ $\frac{1}{16}$)	1 max		
Primary 8-oz size	$4\frac{3}{4}$ ($\pm$ $\frac{1}{16}$)	$8\frac{1}{8}$ (+ $\frac{1}{8}$, $-\frac{1}{16}$)	$1\frac{1}{2}$ ($\pm$ $\frac{1}{16}$)	1 max	$\frac{7}{32}$ min.	$\frac{1}{8}$ min.
Alternate 8-oz size	$5\frac{1}{4}$ ($\pm$ $\frac{1}{16}$)	$7\frac{1}{4}$ (+ $\frac{1}{8}$, $-\frac{1}{16}$)	$1\frac{1}{2}$ ($\pm$ $\frac{1}{16}$)	1 max	$\frac{7}{32}$ min.	$\frac{1}{8}$ min.

have organized food service facility. It includes a complete 50-person meal except for milk, cereal, bread, fruits, and vegetables. The breakfast includes a combination of egg, pork, beef, juice, dessert, and others. The lunch and dinner includes a combination of vegetable, meat, rice, pasta, juice, dessert, and fruits. Each menu, including other enhancements, provides about 1450 kcal per serving. The UGR-H&S Option has a pallet containing 4 tiers, and each tier provides about 100 meals assembled at government depots. They have a shelf life of 18 months at 80°F.

UGR-A. The UGR-A is similar to UGR-H&S except that this includes perishable/frozen type entrees (A-Rations) along with commercial-type components. Currently, there are 7 breakfast and 14 lunch/dinner menus available, and they provide around 1450 kcal of energy per serving. Each pallet contains about 12 modules or 600 meals built-to-order with direct vendor delivery. The average shelf life is around 3–6 months for frozen entrees.

UGR-B. The UGR-B ration includes dehydrated food and also commercial type items. Currently, it offers 7 breakfast and 14 lunch/dinner menus, with each meal providing an average of 1300 kcal of energy per serving. Each pallet contains around 8 modules or 400 meals assembled at government depots. They have a shelf life of 18 months at 80°F.

UGR-E. As cited in Natick PAM 30–25, 7th edition, November 2006, “The UGR-E includes separate group-serving polymeric trays and/or institutional-sized pouches that contain a shelf stable entrée,

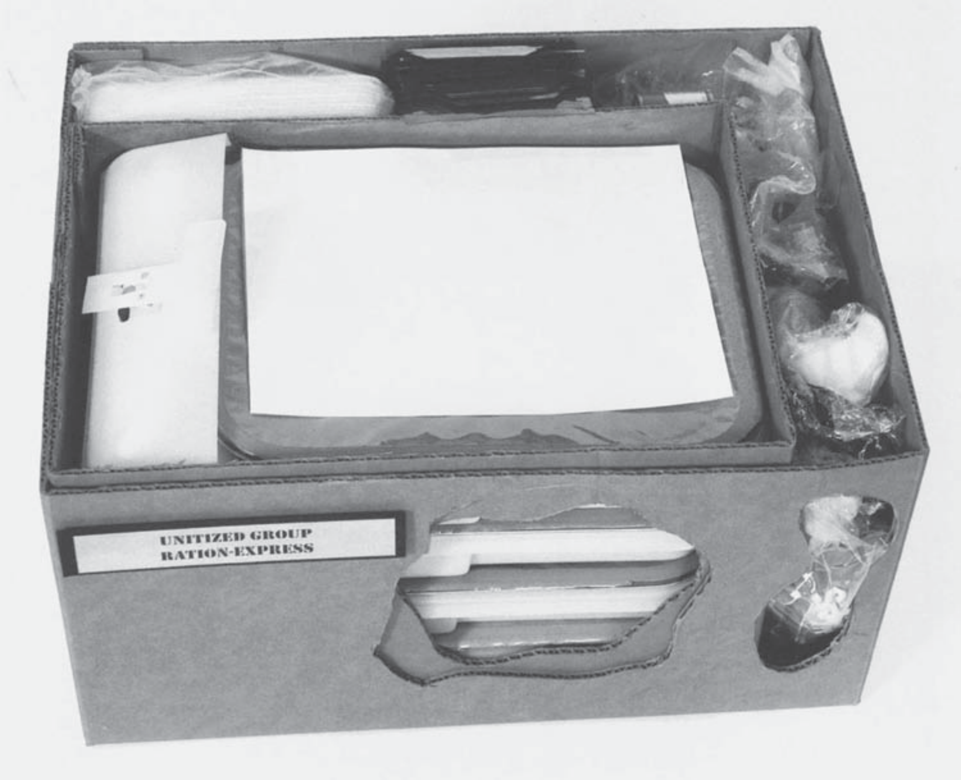

Figure 6. Case containing components of the Unitized Group Ration—Express (UGR-E) ; section cut open to display arrangement of contents.

Figure 7. Components of the UGR-E; food and utensils to prepare and feed 18 combatants.

vegetable, starch, and dessert (Figure 6). Additional items include drink pouches, snacks/candies, compartmented dining trays, disposable eating and serving utensils, condiments, beverage bases, napkins, wet-naps, and a trash bag (Figure 7). The UGR-E will be available in up to three breakfast and six lunch/dinner menus. Each UGR-E will provide 18 complete meals. The self-heated meal modules may be pre-positioned or carried by operational units. The UGR-E has a minimum 18-month shelf life at 80°F. Each pallet contains 18 UGR-Es or 324 meals. When a remote unit requires hot food, a tab is pulled to activate the heaters. In 30 to 45 minutes the module is opened and hot food is ready to be served in trays/pouches to Warfighters, like a cook prepared meal. After opening, the heaters continue to provide heat, keeping the foods hotter longer."

SUMMATION

Current developments and support to combat feeding emphasize improvements in quality, responsiveness to menu likes and dislikes, ration designs compatible with high mobility field tactics, and minimizing the time and complexity of individual and small group food preparation. In many instances, as opposed to activities prior to World War II, the military is pioneering food product and packaging development. At the same time, they utilize applicable commercial items when advantageous. The criticality of adequate nutrition to combatant performance seems to be finally recongnized and institutionalized.

Acknowledgments: The administrative and technical contributions of all who delved into the myriad of concepts and requirements to support the satisfactory feeding of combat troops merit special acknowledgment. The historical reviews by F. A. Koehler and S. M. Moody were keys to coverage to World War II. I also wish to acknowledge the encouragement plus the editing and organizational support of Professor Kit L. Yam of Rutgers, the State University of New Jersey, without which this contribution would not have been completed.

BIBLIOGRAPHY

1. F. A. Koehler, "Army Operational Rations—Historical Background," *Spacial Rations for the Armed Forces*, 1946–53, QMC Historical Studies, series II, No. 6, Historical Branch, Office of the Quartermaster General, Washington, DC, 1958, Chapter 1.
2. Anonymous. Conference and Notes on Rations, QMS, January 1949.
3. S. M. Moody, "Chow Time: Military Feeding" in *Bunker Hill to Bosnia: The History of the Development and Utilization of Military Rations in the United States Armed Forces*, 2000, p. 90.

4. R. A. Lampi, G. L. Schulz, T. Ciavarini, and P. T. Burke, “Performance and Integrity of Retort Pouch Seals,” *Food Technol*. **30**, 38–48 (1976).
5. K. E. Paquette, “Irradiation of Prepackaged Food: Evolution of the Food and Drug Administrations Regulation of Packaging Materials” in *Irradiation of Food and Packaging: Recent Developments*, ACS Symposium Series 875, American Chemical Society, Washington, D.C., 2004, pp. 182–202.
6. V. A. Loveridge, and L. E. Milch, “Physical Evaluation of High Dose Irradiated Multilayer Pouches.” in *Irradiation of Food and Packaging. Recent Developments*, ACS Symposium Series 875, American Chemical Society, Washington, D.C., 2004, pp. 305–313.
7. Y. Tsutsumi, The growth of food packed in retortable pouches in Japan. Presented at Annual Packaging Institute Forum, Chicago, 1974.
8. F. Nughes, “European Developments in Retortable Pouch Packaging,” presented at Annual Packaging Institute Forum, Chicago, 1974.
9. R. A. Lampi, “Flexible Packaging for Thermoprocessed Foods.” in E. M. Mrak, G. F. Stewart, and C. O. Chichester, *Advances in Food Research*, Vol. 23, Academic Press, New York, 1977, p. 305–428.
10. Y. Tsutsumi, “Retort Pouch—Its Development and Applications to Foodstuffs in Japan,” *J. Plastics*. **49**, 24–30, (1972).
11. Y. Tsutsumi, “The Growth of Food Packed in Retortable Pouches in Japan,” *Act. Rep. Res. Dev. Assoc. Military Food Packaging. Syst*. **27**(1), 149–153 (1975).
12. P. L. Goldfarb, “Pouch for low acid foods I,” *Mod. Packaging* **43**(12), 70–76 (1970).
13. P. L. Goldfarb, Pouch for low acid foods II. *Mod. Packaging* **44**(1), 70–76 (1971).
14. N. H. Mermelstein, “An Overview of the Retort Pouch in the U.S.,” *Food Technol*. 28–37 (1976).
15. J. W. Szczeblowski, “An Assessment of the Flexible Packaging Systems for heat processed foods,” Technical report 71-57- GP, U.S. Army Natick Laboratories, Natick, MA, 1971.
16. G. L. Schulz, “Test Procedures and Performance Values Required to Assure Reliability” in *Proceedings, Symposium on Flexible Packaging for Heat-Processed Foods*, National Academy of Sciences, National Research Council, 1973, p. 71–82.
17. D. T. Maunder, J. F. Folinazzo, and J. J. Killoran, “Bio-test Method for Determining Integrity of Flexible Packages of Self Stable Foods,” *Food Technol*. **22**(5), 81 (1968).
18. G. O., Payne, Jr., C. J. Spiegel, and F. E. Long, “Study of Extractable Substance and Microbial Penetration of Polymeric Packaging Materials to Develop Flexible Plastic Containers for Irradiation Sterilized Foods,” Technical report 69- 57-FL, U.S. Army Natick Laboratories, Natick, MA, 1969.
19. W. T. Spencer, and H. A. Bodman, “Non-destructive Testing of Packages of Thermoprocessed Foods,” Final report Phase II (Draft) Contract DAAG17- 69-C-0013, U.S. Army Natick Laboratories, Natick, MA, 1970.
20. I. J. Lichton, J. B. Miyamura, and S. W. McNutt, Nutritional Evaluation of Soldiers Subsisting on Meal, Ready-to-Eat Operational Rations for an Extended Period: Body Measurements, Hydration, and Blood Nutrients,” *Am. J. Clin. Nutr.* **48**, 30–37 (1988).

MILITARY PACKAGING

Jeanne M. Lucciarini
Robert L. Trottier
US Army Natick Soldier
Center, US Army Natick
Soldier RD&E Center

BACKGROUND

Developing food packaging to withstand the military logistics system poses both unique and difficult challenges. There are unusual supply constraints caused by the worldwide presence and the complex requirements of the Military Services. Current and future logistical complexities resulting from widely dispersed joint service operations, multinational deployments, and humanitarian missions have significantly changed the operational and organizational strategies in recent years. Even during peacetime—such as for humanitarian relief or disaster assistance—the military must satisfy its essential supply needs, anywhere in the world, at any point in time, and in the face of potentially severe and extreme environmental conditions. Moreover, the products inside must arrive in a usable condition, with very low levels of damage. Unless the rations retain the properties that make them suitable and desirable for consumption, they will be ineffective—or worse, they could pose a health hazard. Consequently, packaging technologists and engineers must design packaging systems in anticipation of worst-case supply situations.

The current military policy necessitates readiness to counter aggression or to provide disaster assistance wherever it occurs, thus requiring the prepositioning of rations for subsequent mobilization anywhere in the world. Consequently, military rations must be shelf-stable across a wide temperature and humidity range over prolonged periods of time. The current shelf-life requirement of many fielded rations is a minimum of 3 years at 80°F and 6 months at 100°F. In addition, air drop delivery of some rations is to be expected. During development of the military's primary individual combat ration—the Meal, Ready-to-Eat (MRE)—cases of meals were dropped free-fall from an aircraft flying at 110 knots indicated air speed and at an absolute altitude of 150 feet. Based on those tests, the required recovery rate of the MRE components was set at a minimum of 75% and remains the requirement even today.

CURRENT PACKAGING SYSTEMS

As in the commercial market, plastic materials are ideally suited for military food packaging. Plastic materials offer advantages such as material strength, light weight, corrosion resistance, and versatility. Through lamination technology and the use of plastic materials, the military has significantly improved the quality of operational rations.

These improvements have resulted from decreased thermal process times, decreased overall weight, and reduced volume. The development of multilayer structures allows one to tailor a packaging structure for a specific product, thus relying on the synergism of the various materials. Such materials are currently being used to package the MRE, which is used to sustain individuals during operations that preclude organized food service facilities, but where resupply is established or planned. Each meal contains an entrée/starch, crackers or snack bread, a spread (cheese, peanut butter, or jelly), a dessert/snack, beverage powders, an accessory packet, a plastic spoon, and a flameless ration heater (FRH). The flexibly packaged entrées are thermally sterilized, or retorted, at temperatures up to 250°F to ensure shelf stability. The entrées are packaged in a retortable pouch, which is a quad-laminate material constructed, from the inside out, of 0.003- to 0.004-in.-thick polyolefin, 0.0035- to 0.0007-in.-thick aluminum foil, 0.0006 inch thick biaxially oriented polyamide-type 6, and 0.0005-in.-thick pigmented polyester. The polyolefin used for the sealant layer is typically cast polypropylene (cPP) because it provides good heat sealability, flexibility, and low taste and odor transfer properties. The aluminum foil provides sufficient barrier to moisture and oxygen to meet the shelf-life requirements. The polyamide layer was incorporated into the structure in order to address handling and cold weather issues. The outside layer is typically biaxially oriented polyethylene terephthalate (BOPET) because it provides good strength and toughness. It also has excellent dimensional stability and heat resistance, which is ideal for the elevated sealing temperatures that it encounters.

Tri-laminate, high-barrier structures are also used to package various components in the MRE that are not retorted. For example, for the crackers and snack bread, the packaging materials may be constructed, from the inside out, of 0.003-in.-thick ionomer, 0.00035-in.-thick aluminum foil, and 0.0005-in.-thick oriented PP. These items are typically vacuum-packaged to prolong shelf life and to facilitate the use of horizontal form/fill/seal (FFS) equipment. However, this type of vacuum-packing often introduces problems with pinholes and flex cracks in the aluminum foil. The ionomer resin is used to alleviate this problem due to its outstanding puncture and impact resistance. Ionomers have ionic interchain forces that stiffen the polymer chain without hurting the melt processability, and, because of melt strength, are ideal for FFS applications such as the MRE crackers and snack bread. The ionomer layer may be substituted with a blend of linear low-density polyethylene (LLDPE) and low-density polyethylene (LDPE). A major difference between this structure and the retort pouch is that the adhesives used to bond the layers of the retort pouch are more heat-resistant. Other commercially packaged components (e.g., commercial candies) are typically overwrapped in similar tri-laminate pouches if their primary package does not provide sufficient O_2 and H_2O protection or rough handling survivability.

In 1993, the FRH was incorporated into the MRE. The FRH consists of a chemical heating matrix composed mainly of magnesium and iron enclosed in a heat sealable nonwoven polyester scrim material and sealed in a high-density polyethylene (HDPE) heater bag. The HDPE is pigmented olive drab to address battlefield signature concerns. The electrochemical heaters are activated by the addition of less than 2 oz of water, and the exothermic reaction raises the temperature of an 8-oz entrée 100°F in 12 min or less. It also keeps the entrée warm for approximately 1 h if the tactical situation prevents the user from eating immediately. HDPE was selected as the heater bag material due to its chemical resistance, good moisture barrier properties, good thermal properties, and good mechanical properties. The film is processed by blown film extrusion and, because of the orientation of the polymer chains in the direction of flow, it tears evenly in one direction only. This is important to facilitate opening of the bag, since tear notches are incorporated into the design. Due to its excellent thermal properties, it is able to withstand the temperatures encountered during the heating reaction. Its moisture barrier properties adequately prevent the permeation of water vapor into the bag during storage, which further prevents accidental activation of the heater pad. In some instances, when FRHs are pre-positioned onboard ships, the FRHs are further overwrapped in foil pouches to eliminate moisture ingress.

Another addition to the MRE is the water-activity controlled, shelf-stable pouched snack bread. In order to retard potential oxidation of the bread, a ferrous-based oxygen scavenger sachet was added to the package. The scavenger itself is packaged in a pouch constructed from spunbonded polyolefin, which allows the passage of oxygen molecules into the sachet, thus extending the shelf life of the bread product.

MODIFIED ATMOSPHERE PACKAGING

Jeffrey Brandenburg
The JSB Group, LLC,
Greenfield, Massachusetts

Modified atmosphere packaging (MAP) is a term applied to a range of food packaging technologies that rely on mixtures of the atmospheric gases oxygen (O_2), carbon dioxide (CO_2), and nitrogen (N_2), in concentrations different than those in air, to retard deterioration processes in foods. Such atmospheres, sometimes with the addition of small amounts of other gases such as carbon monoxide (CO), ethanol (EtOH), sulfur dioxide (SO_2), or argon (Ar), maintain foods in a “fresh” state for periods of time necessary to move them through extended distribution and marketing chains.

The majority of these technologies rely on a combination of MAP and rigorous refrigeration to forestall microbial and chemical deterioration. The key to the technologies lies in the different concentrations and application of the common atmospheric gases and the beneficial effects conferred by specific concentrations of various gases. Thus, the technologies, rely on gases that are safe, common, cheap, readily available, and usually not considered chemical additives. Different combinations of these gases are appropriate for different foods, package types, and situations. The proper marriage of food, gas mixture, and package type has been the subject of most of the developmental efforts in the area.

Vacuum packaging (VP) is a form of MAP that establishes an atmosphere by drawing a partial vacuum to remove the ambient gases inside a gas barrier package and then sealing the package with the purpose of excluding atmospheric gases, principally O_2. A complete vacuum is never established under practical conditions but the exclusion of gases is the aim.

MAP/VP are employed to delay deterioration of foods that are not sterile and whose enzymatic systems may still be operative. Thus, these techniques differ from traditional methods of food preservation, such as cooking, canning, drying, salting, or freezing, but rather are methods to maintain foods in a “natural” condition while slowing specific deterioration processes. Rigorous temperature control is often necessary for the packages to work properly. For this reason, the capabilities of the distribution system or “cold chain management” define the degree to which MAP can be used. These packaging technologies have fit very well into the vertically integrated, geographically restricted distribution systems in Western Europe. Although they have been more difficult to implement in the more fragmented and longer distance distribution systems of North America, they are now used commonly in all types of food packaging.

GASES USED IN MAP

Oxygen (O_2)

Most of the reactions with food constituents involving oxygen are degradation reactions resulting in the oxidative breakdown of foods into their constitutive parts. Oxygen combines readily with fats and oils and causes rancidity. In addition, most spoilage microorganisms require O_2 to grow and will cause off odors in the presence of sufficient oxygen. Oxygen is necessary to the normal respiratory metabolism of fresh fruits and vegetables, and normal atmospheric concentrations of O_2 contribute to senescence and degradation of produce quality. Oxygen is implicated in staling of bakery goods and pasta. It oxidizes the pigments of red meats to an undesirable brown color. In the absence of O_2, meats will take on a purplish color that some consumers find objectionable.

Oxygen permeates through plastic polymers at rates depending on the polymer, but it generally permeates more slowly than carbon dioxide. The permeability rate of oxygen (and all gases) in plastics increases as temperature increases. Similarly, the chemical reactivity of oxygen with food constituents increases as temperature increases.

Carbon Dioxide (CO_2)

Carbon dioxide is present in the atmosphere at low levels ($\sim 0.03\%$) but is a product of combustion and so is easily produced. It is very soluble in water, especially in cold water (179.7 cm^3/100 mL at 0°C), and will thus be readily absorbed by high-moisture, refrigerated foods. Carbon dioxide is soluble in fats and oils, as well as in water, and this solubility can lead to package collapse, off flavors, excess purge by muscle foods, and discoloration of fresh produce. Carbon dioxide permeates most packaging materials more rapidly than other atmospheric gases.

When CO_2 dissolves in water, it has an acidifying effect. This acidification, as well as direct antimicrobial effects of $CO_2 > 10–15\%$, can suppress the growth of many spoilage microorganisms and for this reason it is an important component of MAP.

Carbon dioxide also suppresses the respiration of some fresh fruits and vegetables and thus can help extend their shelf lives. In addition, CO_2, concentrations above about 1% can render many plant tissues insensitive to the ripening hormone ethylene and thus slow their senescence and deterioration. However, too much CO_2 can be damaging to plant tissues and individual fruits and vegetables differ in their tolerance of CO_2.

Nitrogen (N_2)

Nitrogen is the most abundant component in air ($\sim 78\%$) and can be used in either gaseous or liquid form. It is physiologically inert in its gaseous and liquid forms and is used in packaging primarily as a filler and to exclude other more reactive gases. It is sparingly soluble in water (2.33 cm^3/100 mL at 0°C).

Carbon Monoxide (CO)

Carbon monoxide is a colorless, odorless, tasteless, very toxic gas that is effective as a browning and microbial inhibitor. In concentrations as low as 1%, CO will inhibit the growth of many bacteria, yeasts, and molds. It can also delay oxidative browning of fruits and vegetables when combined with low O_2 concentrations (2–5%) and has found limited use commercially for this purpose. By adding minute amounts of CO to red meat packages, products such as ground beef can maintain their natural appearance throughout their shelf life, since CO reacts with the meat pigment myoglobin to create carboxymyoglobin, a bright red pigment that masks the natural aging and spoilage of meats. However, the benefits and risks of using CO in MAP remain controversial, and due to the toxicity of the gas and its explosive nature at 12.5–74.2% in air, it must be handled using special precautions.

Sulfur Dioxide (SO_2)

Sulfur dioxide has been used to control growth of mold and bacteria on a number of soft fruits, particularly grapes and dried fruits. It has also found use in the control of microbial growth in fruit juices, wines, shrimp, pickles, and some sausages. Sulfur dioxide is very chemically reactive in aqueous solution and forms sulfite compounds, which are inhibitory to bacteria in acid conditions (pH <4). However, a significant minority of people display hypersensitivity to sulfite compounds in foods and the use of sulfites has come under public and regulatory scrutiny in recent years.

Ethanol (EtOH)

Ethanol has antifungal activity and has been used with some baked goods in Japan to reduce microbial spoilage. In addition, research results have shown ethanol to enhance firmness of tomatoes and may act as a flavor enhancer for other fruits.

Argon (Ar)

Argon, a noble gas, is not known to have any chemical or biological activity. Nevertheless, reports from one company suggest that it may have antimicrobial effects. Argon comprises 0.9% of the atmosphere and so is relatively abundant.

PACKAGING MATERIALS

Most MAPs rely on flexible monolayer, multiplayer, and multilayer laminate films and/or composite trays to maintain product and atmosphere integrity. Polymer-paper and polymer-foil laminations, as well as metal cans and glass jars, are also used in such packaging. Many types of polymers and composite materials are available for these uses, and more are appearing every day. Polymers probably comprise upwards of 90% of the materials used in MAP, with paper, paperboard, aluminum foil, metal, and glass accounting for the remainder. However, for each product category, relatively few kinds of materials are used. The selection of materials depends on technical considerations of performance, strength, sealability, printability, and recyclability as well as aesthetic, safety, and cost considerations.

The most commonly used polymers are polyethylene (PE), polypropylene (PP), polyester, polycarbonate, polystyrene (PS), nylon, ethylene–vinyl alcohol (EVOH), polyvinylidene chloride (PVDC), ethylene vinyl acetate (EVA), cellophane, rubber, and butadiene. In addition, sealant layers of ionomer or other polymer materials are sometimes used.

Barrier Properties

The function of many MAP systems is to exclude O_2 and moisture from the packaged food and thereby retard oxidative rancidity (baked goods, *Sous Vide*, nuts, and pasta), retard growth of spoilage microorganisms (meats, pasta, baked goods), maintain crispness (baked goods and snack foods), and maintain proper color (red meat). In other packages, the aim is to prevent egress of CO_2 to retard growth of microorganisms (meat, baked goods and pasta). These packages require the use of gas barrier materials that allow very litle permeation of gases.

MAP for fresh produce, on the other hand, must allow entry of a controlled amount of atmospheric O_2 to maintain the aerobic metabolism of the product. In addition, controlled amounts of CO_2 must also exit the package to avoid buildup of injurious levels of the gas. These packages rely on the use of polymer films with either relatively high gas permeability characteristics or microperforations.

The barrier of a polymeric film to a gas is inversely proportional to the permeability of the film (i.e., the higher barrier, the lower permeability). Gas permeation involves three sequential steps: adsoprtion of the gas molecules onto one side of the film, diffusion of the gas molecules across the film, and desorption of the gas molecules from the other side of the film (1). The first and third step, adsorption and desorption, may be described as Henry's Law:

$$c_s = Sp$$

where c_s is gas concentration at the film surface (moles/cc), p (atm) is partial pressure of the gas, and S is solubility coefficient (moles/cc/atm). The second step, diffusion, may be described the Fick's First Law:

$$J = -D\frac{\mathrm{dc}}{\mathrm{dx}}$$

where J (moles/cm^2/s) is diffusion flux, D (cm^2/s) is diffusivity or diffusion coefficient, c (moles/cc) is gas concentration, and x (cm) is distance in the flow direction.

Sometimes, small holes or microperforations are incorporated in the film structure, which have the effects of increasing the values of permeabilities and decreasing the permeability ratio of CO_2 to O_2.

When calculating the permeability of a multilayer polymer laminate, the following equations may be employed (1, 2):

$$\frac{L_T}{P_T} = \frac{L_1}{P_1} + \frac{L_2}{P_3} + \frac{L_3}{P_3} + \cdots$$

where P is the permeability, L is the film thickness, the subscript T refers to the total film, and the subscripts 1, 2, 3 refer to the individual layers in the film.

Gas barrier properties of plastic films are sensitive to temperature and, in a few cases such as for EVOH or nylon, relative humidity. As most film permeability testing occurs at room temperature and low relative humidity, it is often difficult to predict barrier performance under the high humidity refrigerated conditions typical of extended shelf life fresh foods. As a rule, both WVTR and gas transmission rates increase with increasing temperature (see also Barrier Polymers).

ACTIVE PACKAGING

Besides gas flushing, gas injection, and wrapping in packages that mediate or obstruct gas movement, there are a growing number of supplementary materials that can be added to MAPs or used with those packages to further alter and control the package environment. These include absorbers, emitters, scavengers, scrubbers, and desiccants that, when added to a package, alter the package structure, function, or properties. Their purpose is to extend product shelf life, usually through the control of atmospheric gases and moisture, without the use of "preservatives." These materials are diverse and their claims in the marketplace may sometimes outpace their capabilities. But there is no question that this is a rapidly growing area of packaging that is likely to move into the mainstream of food packaging in the near future (3).

Oxygen Absorbers

For packaging applications that involve oxygen-sensitive products, gas flushing with nitrogen or carbon dioxide often is insufficient to remove residual oxygen. Because low concentrations of oxygen can participate in the degradation of fatty foods, accelerate staling of baked goods, and facilitate other forms of deterioration, the use of oxygen absorbers as an adjunct to gas flushing has become an important methodology. Most commercially available O_2 absorbers use metallic reducing agents such as powdered iron oxide, ferrous carbonate, or metallic platinum. Iron powder is the most common active ingredient. These products often utilize powdered FeO, which becomes Fe_2O_3 and Fe_3O_4 and their hydroxide forms after absorption of O_2. The lower the temperature, the lower the O_2 absorption speed (4, 5).

Reduced iron is listed as GRAS (generally regarded as safe by the FDA) with no limitations on its use other than good manufacturing practices. It should be pointed out that the use of O_2 scavengers reduces O_2 to levels that may be conducive to the growth and toxigenesis of certain anaerobic pathogens, notably *Clostridium botulinum*, and thus should be used with great care with nonsterile fresh foods.

Carbon Dioxide Absorbers

Some of the absorbents that are currently being used to remove excess CO_2 from CA storage rooms could be adapted for their utilization in MAP. They include lime (calcium hydroxide $[Ca(OH)_2]$ + sodium hydroxide or potassium hydroxide), activated charcoal, and magnesium oxide (5).

Moisture Regulators

The stability and shelf life of many food products depends, in part, on the maintenance of an appropriate water activity inside the package. Inappropriate moisture levels can lead to shortened shelf life, reduced quality, and, in the worst case, unwanted microbiological activity. While many films are available that will provide an excellent moisture barrier to prevent the ingress or egress of unwanted moisture, often the food product itself can contribute unwanted humidity within a package. Several products are available that will aid in the regulation of proper moisture within the package. Most rely on physical absorption of moisture, though a few rely on actual chemical bonding to the water molecules. The most common desiccants currently used are based on silica gel, montmorillonite clay, calcium oxide, activated carbon, or glycerol. Of these, silica gel is the most common.

Silica gel is a partially dehydrated colloid of silicic acid. Its structure is such that it forms interconnected micropores that form a vast surface area that can attract and hold water through adsorption and capillary condensation. Silica gel is most efficient at temperatures below 25°C where it can adsorb up to 40% of its weight in water. Its efficiency falls off at higher temperatures. Silica gel is nontoxic and noncorrosive. Montmorillonite clay is less efficient at moisture adsorption than silica gel and also slower.

Alternatively, saturated salt solutions can be employed to maintain a desired equilibrium relative humidity within the package. Individual salts, if present in sufficient quantities, will maintain a characteristic relative humidity (RH) at a given temperature. For example, NaCl, at 5°C, will maintain a RH of 75%. For a higher equilibrium RH, K_2SO_4, at 5 °C, will maintain an RH of 98.5% (6, 7). Selection of the proper salt can result in almost any desired RH.

Absorbers/emitters of Ethylene and Other Volatiles

Because ethylene gas is a plant hormone with powerful physiological effects at very low concentrations, it is sometimes removed from the environment of sensitive commodities. Ethylene gas (C_2H_4), in part per million concentrations, can induce rapid ripening and senescence in many fruits, yellowing of leafy vegetables, and physiological injury of selected produce items. Potassium permanganate has long been used to remove ethylene from controlled atmosphere apple storage rooms. The same compound, adsorbed on various inert substrates, is available commercially in sachets, on pads, or in granular form. Many other compounds have ethylene adsorbing capacity, including various hydrocarbons, silicones, glycols, and clay materials (8).

In addition, many other volatile compounds can be responsible for off-odors in foods but can be reduced through the use of absorbers. Potassium permanganate and activated charcoal are the most important and can absorb many volatile gases other than ethylene.

Active Films

While the above methods of active package modification have their virtues, they all suffer because they have to be utilized in addition to the packaging itself. As such, they represent an added expense and, in some cases, the addition of a potentially hazardous material. A number of innovative approaches to avoiding these problems have emerged in the past few years. There are now several plastic films that incorporate some of the functions described above into the film itself. Thus, the package itself may absorb O_2, ethylene or CO_2, or control decay (3).

There are several new films, mostly from Japan, that are reputed to have ethylene-adsorbing capabilities to improve the shelf life and freshness of fruits and vegetables. These films are typically made of common plastic polymers (usually low-density polyethylene) with one or several clay materials (zeolites, cristobilites, etc.) embedded in the film matrix. These ceramic materials have putative ethylene-adsorbing capacity. However, investigators have found little ethylene adsorbing capacity by porous ceramic materials (8, 9). Urushizaki (10) tested one such ceramic material and detected adsorption of less than 1 μL/g of ceramic material after exposure to 500 ppm of ethylene. Such adsorptive capacity is insufficient to be of benefit in a modified atmosphere package of fresh produce.

Some films containing ceramic materials are claimed to aid in the preservation of produce through the emission of farinfrared radiation. Such radiation normally is effective mainly in heating an absorbing body, in this case the fresh produce. This is antithetical to the usual aim in preserving produce. The reputed beneficial effect is that the infrared radiation excites the plant cell membranes, thereby rendering the cells more resistant to microbial invasion. Such claims are as yet unsubstantiated in the scientific literature.

Films that will pass ultraviolet radiation have been suggested for reduction of ethylene and for control of microorganisms. Ultraviolet radiation reacts with oxygen to form ozone which scavenges ethylene and also kills microorganisms. Unfortunately, ozone is also very damaging to most plant tissues. In addition, the reaction may not be very efficient in low oxygen environments such as those found inside MAP.

A promising approach to reduction of oxygen content inside a package is based on imbedding in the plastic film a photo-sensitizing dye and an electron-rich oxidizable compound termed a singlet oxygen acceptor. When irradiated with ultraviolet, visible, or near-infrared radiation of appropriate wavelengths, the excited dye molecules sensitize oxygen molecules by converting them to the singlet state. Such oxygen molecules then more readily react with oxygen acceptor molecules that are also embedded in the film (11).

Other workers are making progress in incorporating antimicrobial agents into plastic films so that the package itself controls bacteria and fungi. Technical hurdles surrounding a percentage of products in contact with the packaging material exist. In addition , the incorporation of pesticides in films may meet resistance in the current regulatory climate.

Temperature Switch

Temperture switch polymers, which are relatively new technologies, are unique polymers that respond to temperature changes in a controllableand very predictable way. Temperature switch polymers can significantly change their permeability, adhesion, viscosity, or volume when heated or cooled by just a few degrees above or below a preset temperature switch (12). Temperature switch polymers can be very advantageous in packaging applications when significant temperature variations occur within the distribution channel.

MAP OF RED MEAT

Deterioration of Fresh Meat

Fresh meat undergoes both oxidative color deterioration and microbiological deterioration. The color of red meat is determined by the oxidation state of the pigment myoglobin. The reduced form, deoxymyoglobin, is a purple color. Oxygenated oxymyoglobin is a bright red color associated with freshness in the minds of many consumers. Atmospheric O_2 slowly converts myoglobin to the dull brown metmyoglobin that many consumers associate with poor quality. Deoxymyoglobin is more susceptible to oxidation than oxymyoglobin, so metmyoglobin forms more readily at low O_2 concentrations than at higher concentrations (13).

Fresh meat is contaminated on the surface with spoilage bacteria from the slaughtering process. The presence of O_2 encourages the growth of aerobic spoilage bacteria, particularly species of *Pseudomonas*, which will produce putrid, malodorous compounds.

Vacuum Packaging

The exclusion of atmospheric O_2 prevents the oxidation of myoglobin to metmyoglobin as well as suppressing the growth of malodorous *Pseudomonas* bacteria. The delay of these two primary forms of deterioration through packaging can significantly extend shelf life of fresh red meat.

Vacuum packaging has been applied to 2–9 kg primal and subprimal cuts of meat for distribution to stores. Appropriate films for such packaging must have good gas barrier properties, generally admitting $<50\,\mathrm{cc}\,O_2/\mathrm{m}^2/24\,\mathrm{h/atm}$ (13). In addition, they must resist puncturing by protruding bone and must be flexible enough to form a tight “skin” over the meat and prevent pockets of air from forming where aerobic deterioration could rapidly occur. Films made of polyamide–polyethylene laminates and EVA copolymer–PVC/PVDC copolymer laminates, as well as ionomer–polyamide–EVA copolymer, among others, have been used for this purpose (17).

When vacuum-packaged meats reach the store, they are unpacked, cut into appropriate consumer units, and placed in polystyrene foam trays of PVC trays and overwrapped with O_2 permeable films. The ingress of O_2 causes the deoxymyoglobin to “bloom” into red oxymyoglobin.

Vacuum packages for meat are formed in four basic ways: (i) through heat-shrinking a flexible bag around the primal cuts, (ii) Using a preformed plastic bag in an evacuation chamber, (iii) Thermoforming trays in-line from a base web, or (iv) Vacuum skin packaging in which the product acts as the forming mold. Vacuum-packaged beef of normal pH and kept at chill temperature can be stored for 10–12 weeks. Lamb, because it tends to have more neutral pH exterior adipose tissue than beef, will keep 6–8 weeks in vacuum packages (14).

Case Ready Meats

A further evolution of vacumm-packaged meats are case-ready meats. Case-ready meats are packaged at plants and delivered to retailers ready to be placed in the retail case. Case-ready meats employ a combination of MAP technologies including vacuum packaging as well as low and high O_2 MAP (15). Examples of growing case-ready meats include poultry, beef, veal, pork, and ground meat products.

High O_2 MAP

High O_2 MAP employs 40–80% O_2 to extend color stability as well as 20–30% CO_2 to delay microbial spoilage. However, the presence of O_2 can lead to off odors and rancidity and so high O_2 MAP has not been suitable for prolonged storage of red meat.

Low O_2 MAP

Combinations of low O_2 and high CO_2 have been achieved through gas-flushing packages with N_2 and CO_2. The absence O_2 retards formation of brown metmyoglobin and the CO_2 suppresses growth of spoilage bacteria. However, because CO_2 is very soluble in both water and fat, excess CO_2 must be added to the package to allow for the solubility. Package collapse can result unless N_2 in the headspace of the package significantly exceeds the amount of CO_2 that solubilizes. Such packages have resulted in shelf lives of 3–4 months for pork and lamb.

MAP OF POULTRY

Poultry is usually contaminated with a large bacterial population that consists primarily of spoilage bacteria. Poultry is high pH compared to red meat and so provides a good environment for growth of these bacteria. Vacuum packages are difficult to form around poultry because of the irregular shape and sharp edges commonly encountered. Consequently, shelf life in vacuum packages is usually short, limited to about 2 weeks before putrid odors develop.

Low O_2 combined with high CO_2 has been extensively used with bulk packaged poultry. Oxygen is removed by drawing a vacuum and CO_2 and N_2 are introduced. Despite the presence of some residual O_2, shelf lives of 2–3 weeks can be achieved (13). Case-ready MAP is also expanding in poultry, including chicken, turkey, and duck.

MAP OF FRESH FISH

Fish encompasses a great diversity of species and habitats. In general, fish differ from terrestrial foods in that the interior of their muscles are not sterile, they undergo rapid enzymatic breakdown of their proteins even in low O_2 environments, and they are often not raised in controlled environments. Fish are only as clean as the water they were taken from. Thus, fish can be carriers or several pathogens such as *Clostridium botulinum* non-proteolytic types E and B, *Vibrio parahaemolyticus, Listeria monocytogenes*, and others (16).

Fish rapidly spoil due to the activity of gram-negative spoilage bacteria and they undergo enzymatic breakdown. Vacuum and MAP employing high CO_2 have been used to extend the normally limited shelf lives of various kinds of fish. Gas mixtures of 30% O_2, 40% CO_2 and 30% N_2 have been used for nonfatty fish, while 40% CO_2 and 60% N_2 have been used for smoked and fatty fish, (17).

The use of MAP and vacuum packaging are not capable of preventing growth and toxin production by *C. botulinum* (18). Maintaining the temperature below 3°C throughout distribution is the only barrier to the growth of this pathogen. While commercially packaged raw fish have not been implicated in food poisoning incidents, MAP of fresh fish should only be undertaken with extreme caution.

MAP OF BAKERY AND PASTA PRODUCTS

Pasta and baked goods are subject to moisture loss, oxidative rancidity, and microbiological breakdown, primarily due to growth of molds. MAP has been used extensively in Europe and, less so, in the United States to prevent deterioration and extend shelf life. Vacuum packaging has been used for some baked goods to remove headspace O_2 and inhibit oxidative rancidity and growth of aerobic spoilage microbes. Packaging in a combination of N_2 and CO_2 has been used more commonly to replace O_2 and suppress growth of bacteria and molds due to the presence of the CO_2. Oxygen absorbers, CO_2 generators, and ethanol emitters have been used to extend the shelf life of baked goods in Japan and other parts of Asia (19).

Because the exclusion of O_2 is so crucial to MAP of pasta and baked goods, packaging materials must provide a good barrier to O_2. Rigid trays with nylon/LDPE or PVC/PVDC lidstocks have been used. Alternatively, laminated films made from nylon/polyethylene, nylon/PVDC/PE, or nylon/EVOH/PE have also been used. All maintain a reasonable moisture vapor as well as an O_2 barrier.

Baked goods have been packaged in atmospheres of 50–100% CO_2 plus 0–50% N_2, which can result in shelf lives up to several months for some products. Fresh pasta will stay fresh in MAP up to 2 weeks if not pasteurized or, in some cases, 3 months if pasteurized (20).

MAP OF PREPARED FOODS

Chilled, prepared foods are perhaps the fastest growing area of all food categories, and many of these foods are being shipped and marketed in MAP. As with all MAP applications, use of top-quality ingredients, strict adherence to temperature control, and careful sanitation are prerequisites to entering this market. The most rapidly growing areas of this sector include such prepared foods as pasta, pizza, precooked meats, sandwiches, precooked French fries, and complete prepared dishes such as "*Sous Vide*."

Most chilled, prepared foods are packaged in combinations of N_2 and CO_2 with little or no O_2 in the package. Such atmospheres confer several benefits including reductions of oxidative rancidity, lack of growth of aerobic spoilage microorganisms, suppression of growth of molds by CO_2, little moisture loss through the film package, and reduced oxidative breakdown of flavor and aroma volatiles.

The packages for these products are generally high-barrier polymer coextrusions or laminations. Packaging formats can include bags, top- and bottom-forming and nonforming webs, stand-up pouches, or multilayer lidding materials sealed onto rigid trays. Most packaging is run on form/fill/seal machines using with either PVC or EVOH polymers to provide the barrier properties.

Sous Vide involves vacuum packaging of foods, usually in multilayer polymer pouches, cooking the vacuum packaged product in a water bath, moist steam or pressure cooker, cooling rapidly in cold water, and then storing under refrigeration. These products will have a shelf life of 2–3 weeks under refrigeration. Cooking under vacuum protects the flavors from oxidative breakdown as well as preventing the growth of aerobic spoilage microorganisms (21).

While the food is not sterile, it will have low microbe counts and refrigeration should prevent growth of those few microbes that survived the cooking process. Because the cooking process will not kill spore-forming bacterial pathogens, the inclusion of barriers to pathogen growth, such as low pH, reduced water activity, or the introduction of lactic acid bacteria, in addition to refrigeration, has been suggested. *Sous Vide* was developed in France and has found widespread acceptance there. Acceptance has been slower in the United States but continues to grow, particularly in the food service sector.

MAP OF FRESH FRUITS AND VEGETABLES

The primary effects of MAP of fruits and vegetables are based on the often observed slowing of plant respiration in low O_2 environments. Reduced respiration leads to reduced depletion of carbohydrate reserves, slower ripening of fruits, and longer shelf life. This suppression of respiration continues until O_2 reaches about 2–4% for most produce. If O_2 gets lower than 2–4% (depending on product and temperature), then fermentative metabolism can replace normal aerobic metabolism and off flavors, off odors, and undesirable volatiles can be produced. Low O_2 can also reduce enzymatic browning of injured plant tissues. As CO_2 increases above the 0.03% found in air, a suppression of respiration results for some commodities. Reduced O_2 and elevated CO_2 together can reduce respiration more than either alone. In addition, elevated CO_2 suppresses plant tissue sensitivity to the effects of the ripening hormone ethylene. For those products that tolerate high concentrations of CO_2, suppression of the growth of many bacteria and fungi results at $>10\%$ CO_2 (22).

Although package O_2 permeability increases somewhat as temperature increases, product respiration (demand for O_2) increases much faster. Thus, O_2 will rapidly be depleted if package temperature increases. Because package performance can only be specified within a particular temperature range, it is important that packages be used within that range. If the temperature gets outside of that range, product quality will suffer (7).

The rapid growth of the fresh-cut produce industry, including retail salads, vegetables, and fruits as well as many fruits and vegetables produced for food service, has been possible largely due to the improved quality and shelf life of cut produce in MAP. Products are packaged in a wide variety of modified atmosphere packaging including laminated and/or coextruded copolymers of polyolefins such as LDPE, EVA, PS, and PP. Packaging formats include bags, stand-up pouches, lidded trays, and microwaveable trays. The choice of the correct polymer or combination of polymers is often determined by matching the strengths of particular polymers with the requirements of the packaging system, while at the same time minimizing or masking particular polymer disadvantages (2). Package atmospheres can be created passively by sealing the bag and allowing the product respiration to decrease the O_2 concentration and increase the CO_2 concentration until equilibrium is reached. Alternatively, the atmosphere can be initially rapidly modified by reducing the package headspace by drawing a vacuum and, sometimes, by injecting a desirable gas mixture into the bag. In any case, the equilibrium package atmosphere is determined by the respiration rate of the product or product blend, the final target modified atmosphere, and the gas permeability properties of the package, not by the initial atmosphere in the bag. Once all of the parameters have been defined, mathematical models can be used to determine appropriate film breathability characteristics that will deliver a beneficial atmosphere at the anticipated processing, storage, and distribution temperatures.

An effective mathematical model to estimate appropriate film breathablity for a desired atmosphere is as follows (23):

$$WR_{O_2} = \frac{AP_{O_2}}{L}(O_{2,air} - O_{2,\mathrm{pkg}})$$

$$WR_{CO_2} = \frac{AP_{CO_2}}{L}(CO_{2,pkg} - CO_{2,\mathrm{air}})$$

where

R_{O_2} = respiration rate (O_2 consumption rate of product)
R_{CO_2} = respiration rate (CO_2 evolution rate of product)
W = product weight
L = film thickness
A = film surface area
P_{O_2} = permeability to O_2
P_{CO_2} = permeability to CO_2
$O_{2,\mathrm{pkg}}$ = desired O_2 concentration in package
$O_{2,\mathrm{air}}$ = O_2 concentration in air (typically 21%)
$CO_{2,\mathrm{pkg}}$ = desired CO_2 concentration in package
$CO_{2,\mathrm{air}}$ = CO_2 concentration in air (typically 0.03%)

BIBLIOGRAPHY

1. D. S. Lee, K. L. Yam, and L. Piergiovanni, *Food Packaging and Technology*, CRC Press, New York, 2008, Chapter 4.
2. J. R. Gorny and J. Brandenburg, *Packaging Design for Fresh-Cut Produce* IFPA, 2003.
3. M. L. Rooney, "Active Packaging in Polymer Films" in M. L. Rooney, ed., *Active Food Packaging*, Blackie Academic & Professional, 1995, pp. 74–110.
4. J. P. Smith, J. Hosohino, and Y. Abe, "Interactive Packaging Involving Sachet Technology" in Ref. 1, pp. 143–173.
5. J. P. Smith, Y. Abe, and J. Hoshino, "Modified Atmosphere Packaging—Present and Future Uses of Gas Absorbents and Generators" in J. M. Farber and K. L. Dodds, eds., *Principles of Modified-Atmosphere and Sous Vide Product Packaging*, Technomic Publishing Co., Lancaster, PA, 1995, pp. 287–323.
6. P. W. Winston and D. H. Bates, "Saturated Solutions for the Control of Humidity in Biological Research," *Ecology* **41**(1), 232–237 (1960).
7. D. Zagory, "Principles and Practice of Modified and Atmosphere Packaging of Horticultural Commoditie," in Ref. 3, pp. 175–206.
8. D. Zagory, "Ethylene-Removing Packaging" in Ref. 1, pp. 38–54.
9. D. Faubion and A. A. Kader, Evaluation of Two New Products with Claimed Ethylene Removal Capacity," *Perishables Handling* **86**, 27–28 (1996).
10. S. Urushizaki, "Development of Ethylene Absorbable Film and Its Application to Vegetable and Fruit Packaging," *Autumn Meeting of Japan Society for Horticultural, Science Symposium: Postharvest Ethylene and Quality of Horticultural Crops*, University of Kyushu, October 8, 1987.
11. M. L. Rooney, R. V. Holland, and A. J. Shorter, "Removal of Headspace Oxygen by a Singlet Oxygen Reaction In A Polymer Film," *J. Sci. Food Agric.*, **32**, 265–272 (1981).
12. Landec Corporation. Web information. Available at http://www.landec.com/technology.html., Accessed August 2007.
13. C. O. Gill, "MAP and CAP of Fresh, Red Meats, Poultry and Offals," in Ref. 3, pp. 105–136.
14. A. L. Brody, "Modified Atmosphere/vacuum Packaging of Meat" in A. L. Brody, ed., *Controlled/Modified Atmosphere/Vacuum Packaging of Foods*, Food & Nutrition Press, 1989, pp. 17–37.
15. AMI. Webinformation. Available at http://www.meatami.com/Content/PressCenter/factsheets/casereadymeatsmap.pdf. Accessed August, 2007.
16. D. M. Gibson and H. K. Davis, "Fish and Shellfish Products in Sous Vide and Modified Atmosphere Packs" in Ref. 3, pp. 153–174.
17. G. Robertson, *Food Packaging, Principles and Practice*, Marcel Dekker, New York, 1993.
18. L. S. Post, D. A. Lee, M. Solberg, D. Furgang, J. Specchio, and C. Graham, "Development of Botulinum Toxin and Sensory Deterioration during Storage of vacuum and Modified Atmosphere Packaged Fish Fillets," *J. Food Sci.* **50**, 990–996 (1985).
19. J. P. Smith and B. K. Simpson, "Modified Atmosphere Packaging of Bakery and Pasta Products" in Ref. 3, pp. 207–242.
20. F. Castelvetri, *Proceedings of the Fourth International Conference on Controlled/Modified/Vacuum Packaging*, December 2–6, 1988. Glen Cove, New York, 1989 pp. 43–62.
21. T. Martens, "Current status of *Sous Vide* in Europe" in Ref. 3, pp. 37–68.
22. A. A. Kader, D. Zagory, and E. L. Kerbel, "Modified Atmosphere Packaging of Fruits and Vegetables," *CRC Critical Rev. Food Sci. Nut.* **28**(1), 1–30 (1988).
23. K. L. Yam and D. S. Lee, "Design of Modified Atmosphere Packaging for Fresh Produce" in M. L. Rooney, ed., *Active Food Packaging*, Blackie Academic & Professional, 1995 pp. 55–73.

MODIFIED ATMOSPHERE PACKAGING MARKET, EUROPE

Emma Hanby
Lynneric Potter
Campden and Chorleywood
Food Research Association,
Chipping Campden,
Gloucestershire, United
Kingdom

INTRODUCTION AND MAP MARKET INFORMATION

In the last few decades there has been a dramatic growth in the chilled foods market in Europe. This growth has been stimulated by an increasing consumer demand for fresh, convenient, and additive-free foods. This consumer demand has stimulated the growth of modified-atmosphere packaging (MAP) as a technique to improve product image, reduce wastage, and extend the shelf-life quality of a wide range of foods. Also the added benefits of improved transportation and distribution chains and longer product shelf life have enabled widespread use of modified atmosphere packaging.

The prepared chilled foods market in Western Europe is worth approximately 14.62 billion euros. The United Kingdom leads the way, with 54% of the chilled food market, equating to nearly 8 billion euros, followed by France with 18%. Other countries with increasing sales of chilled prepared foods include Germany, Italy, Spain, Belgium, and the Netherlands (1). Figure 1 illustrates the segmentation of the chilled food market. Proportionally more retail area is being devoted to chilled foods at the expense of frozen and ambient-stable foods. The main

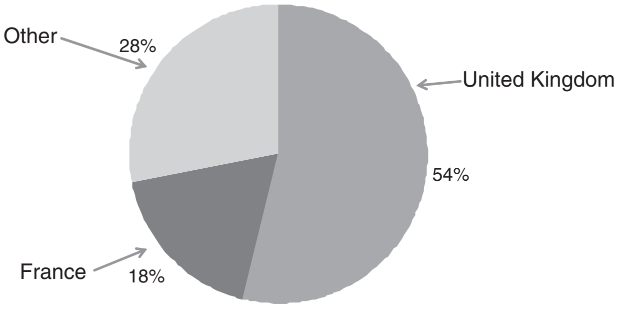

Figure 1. Segmentation of the chilled food market, Europe.

reason for this development is that the concentration of retail power in the United Kingdom is the highest in the world, led by Sainsbury, Tesco, Morrisons, Asda, Waitrose, and Marks & Spencer. Their operations are increasingly being focused on centralized distribution and a quality image that they feel is enhanced by an expanding chilled-foods sector (2).

As MAP grows in popularity across Europe, some of the more established MAP areas such as raw red meats, will see their growth rates slow down. Centralized packing of these types of products will become more common rather than retailers cutting and packing the product in the back of the store. MAP can allow a wider area for distribution across Europe, thereby reducing costs, but packers need to ensure that the product can outlast the distribution time to the store. There has been a surge of interest of MAP in the chilled ready meal market with products such as sandwiches, salads, and cooked–chilled products. It is predicted that the MAP chilled ready meal market will dramatically increase in volume and value, and this strong growth will cause it to overtake the frozen ready meal market, particularly in the United Kingdom.

BACKGROUND INFORMATION

Modified-atmosphere packaging (MAP) is a popular food preservation technique, whereby the composition of the atmosphere surrounding the food is different from the normal composition of air, which consists of oxygen (20.9%), carbon dioxide (0.03%), and nitrogen (79%). These gases can be used on their own or in combination to enhance the shelf life and quality of the packaged product.

Vacuum packing (VP) is the removal of most or all of the air within a package without deliberate replacement with another gas mixture.

Active packaging can be used in conjunction with MAP, whereby certain additives are incorporated into the packaging film or within packaging containers and are capable of altering the atmospheric composition surrounding the food. Active packaging devices include oxygen and carbon dioxide scavengers and ethanol and carbon dioxide emitters.

Controlled-atmosphere storage (CAS) is yet another food-preservation technique similar to MAP; but unlike MAP, where there is no way of controlling atmospheric constituents at specific concentrations once a package has been hermetically sealed, in CAS the atmospheric constituents are precisely adjusted to specific concentrations throughout the storage and/or distribution of perishable foods. CAS is used primarily for the warehouse storage of whole fruit and vegetables and for the road or sea-freight container transport of perishable foods (3).

Gases Used for MAP

The gas mixture used in MAP must be chosen to meet the needs of the specific food product (3), but for nearly all food applications this will be some combination of either carbon dioxide (CO_2), oxygen (O_2), or nitrogen (N_2). For example, raw red meats are often packed in a high oxygen environment to maintain the red color, bakery products will be packed in a combination of carbon dioxide and nitrogen to prevent mold growth and pack collapse, and dried goods are packed in nitrogen to prevent oxidative rancidity.

Novel Gases

Novel gases such as carbon monoxide, ozone, nitrous oxide, helium, argon and high oxygen have been used to extend the shelf life of a number of food products. For example, carbon monoxide has been shown to be very effective at maintaining the color of red meats, maintaining the red stripe of salmon, and inhibiting plant tissue decay. However, carbon monoxide is not permitted in the EU, due to its highly toxic and explosive nature. Argon and nitrous oxide are known to sensitize microorganisms to other antimicrobial agents (4). Argon has been shown to inhibit tissue fermentation in sliced tomatoes, inhibit protein breakdown in seafood, and extend the shelf life of prepared fruit (5) and has been used as a replacement for nitrogen. Research has also indicated that argon is biochemically active, probably due to its enhanced solubility in water compared with nitrogen and oxygen and its possible interference with cell membrane fluidity and enzymic oxygen receptor sites (4). Nitrous oxide is being used as a propellant in whipped cream cans. The commercial use of most of these gases is severely limited in the United Kingdom because of regulatory constraints, safety concerns, negative effects on sensory quality, or economic factors (3). However, argon (E938), helium (E939), nitrous oxide (E942), and sulfur dioxide (E220) are now permitted for food use in the EU (4).

Research into high oxygen applications other than with meat products has resulted in some commercial applications. High oxygen has been found to be particularly effective at inhibiting enzymatically mediated discoloration, preventing anaerobic fermentation reactions and inhibiting aerobic and anaerobic microbial growth. Under high oxygen MAP it is hypothesized that reactive oxygen species damage vital cellular macromolecules and thereby inhibit microbial growth when oxidative stresses overwhelm cellular antioxidant protection systems (6). Research carried out at Campden and Chorleywood Food Research Association (CCFRA) found high oxygen MAP to have beneficial effects on the sensory quality of the vast majority of the fresh produce items studied. These items included a number of different types of lettuce, potatoes, coriander, raspberries, and strawberries (7).

Products Packed Under MA

The United Kingdom is undoubtedly leading the world in terms of the range of food products packed under MA (8). These product developments have been prompted by the major retail chains, which have considerable influence in the British food industry (9). Established products packed under MA include red meats, poultry, cooked and cured meats, fish and seafood, pasta, cheese, bakery goods, pizza, quiche, ready meals, dried foods, fruit, and vegetables. Newer modified atmosphere products include sandwiches, as well as fresh chilled combination products with meat/fish and vegetables. Further developments include products being modified atmosphere packed, stored frozen, and then thawed to chilling for retail sale. However, there is little background information on the effects of freezing on the gases used in modified atmosphere packaging.

Nitrogen and/or carbon dioxide are also used with a number of beverages such as beer, lager, fruit juices, and carbonated soft drinks.

Although retail products have tended to attract most of the publicity in relation to MAP developments, bulk MA technology is being used for products such as pork primals, poultry, and bacon (8). In addition, this technology is presently being used to gas flush conventionally packaged retail products, such as overwrapped trays of red meats, into large bag-in-box master packs. Excellent opportunities also exist for using MAP technology for supplying the catering, food processing, and wholesale industries with bulk packs of many dried commodities, such as tea, coffee, cocoa, herbs, spices, and nuts, as well as chilled perishable foods (8).

MAP DEVELOPMENTS

High-Permeability Films for Produce

Unlike other foods that are MA packed, fresh fruit and vegetables continue to respire after harvesting, and consequently any subsequent packaging must take into account this respiratory activity. The depletion of O_2 and the accumulation of CO_2 are natural consequences of the progress of respiration when fresh fruit or vegetables are stored in a hermetically sealed package. Such modification of the atmospheric composition results in a decrease in the respiration rate, with a consequent extension in the shelf life of fresh product. However, packaging film of the correct permeability must be chosen to realize the full benefits of MAP for fresh produce.

Typically, the key to successful MAP of fresh produce is to maintain an equilibrium MA (EMA) containing 2–10% O_2 and CO_2 within the package. For highly respiring produce such as mushrooms, beansprouts, leeks, herbs, peas, and broccoli, traditional films such as LDPE, PVC, EVA, and OPP are not sufficiently permeable. Highly permeable microperforated films for highly respiring produce are more suitable. P-Plus film can be microperforated to match the permeability of the film with the product's respiration rate.

Intellipac® technology is a means of providing different permeabilities to maintain the optimum atmosphere within a pack even with changing temperatures. The membrane patch that is attached to a hole in the film controls the flow of gases in and out of the pack by altering the properties of the polymers within the membrane (10).

Seal Integrity of MA Packs

Seal integrity is important to maintain a safe and good-quality product. A number of methods can be used to detect leaks in MA packs. Offline methods include the following:

1. *Dye testing.* A penetrative dye is sprayed or painted onto the seal area. This indicates if a leak is present and also identifies the position.
2. *Gas Analysis.* This can be used on flexible packs to determine whether there is a leak in the sealing area (11). EMCO has established a European company that has the distribution rights of Oxysense O_2 technology. This can also be used as a noninvasive detection device. The O_2xysense™ 4000 is a portable oxygen analyzer that utilizes a noninvasive optical method that determines oxygen concentration by measuring the fluorescent energy released from an illuminated oxygen-sensitive sensor (O_2xyDot™) (11).
3. *Indicators.* This is a nondestructive method for detecting leaks in MA packs. Indicators give a visual indication (e.g., a color change), if a leak is present. For modified atmosphere packs the indicators used are oxygen or carbon dioxide, depending on the gas composition of the pack.

Carbon dioxide leak detectors can also be used where at least 10% of the packs gas composition is CO_2. These systems can be offline or online and use CO_2 as a trace gas to detect leaks.

Easy-Opening/Resealable Systems

A visit to any European supermarket will illustrate the enormous growth in convenience foods. Clearly, the ease of opening of these products is a key attribute. Also as the population ages, and consequently their abilities to read and/or handle food packages decreases, there is a need to understand how consumers manage so-called easy-to-open packaging and also to have an understanding of how reducing seal strengths to make packs of all types easier to open may compromise the quality and safety of the products on sale. Easy-open features are not only important for the convenience food market but are essential for the elderly and those with disabilities. Easy opening and resealable systems are very different. Easy opening systems are designed to aid consumers when opening packaging, whereas resealable packs are designed to help extend food shelf life in the consumer's home. However, once the primary seal is broken, the major benefit of MA to extend food shelf life is lost. The resealable features such as slider/zipper will just provide the convenience benefit to the consumer and will prevent moisture loss of the product.

There are a variety of systems now available, including peelable films for easy opening and zips/slider (single- or dual-track zipper) to reclose bags after opening.

Valle Spluga Two-Phase MAP

When packing high-moisture/high-fat foods such as meat, poultry, and seafood, the high solubility of CO_2 in these foods can lead to pack collapse, due to the decrease in headspace volume (10). In conventional retail MA packs, pack collapse is minimized by limiting the proportion of CO_2 to less than 40% and having a large headspace volume above the food. However, these procedures limit the shelf-life extension potential since lower levels of bacteriostatic CO_2 are maintained within MA packs. Additionally, the larger headspace volume required results in a decreased packing density, with associated higher costs of production, storage, and distribution (8).

An innovative process for solving the problem of pack collapse is now widely used. This two-phase process is based on the use of solid and gaseous CO_2 in MA packs (7). A weighed tablet of solid CO_2 is dispensed into a thermoformed tray containing the food product, just before gas flushing and sealing. The solid CO_2 sublimes to gaseous CO_2 after sealing and causes the semirigid package to swell. However, after a few hours, an equilibrium is established between the gaseous CO_2 in the headspace and the CO_2 absorbed by the food, and hence the package reverts to its original shape. Valle Spluga patented the process and has successfully used this process to market spring chickens in MA packs that maintain high levels of CO_2 with a minimum headspace (8).

GUIDELINES FOR THE MANUFACTURE AND HANDLING OF MA PACKED FOODS

MA-packed chilled foods have been marketed in Europe for many years, and during this period they have maintained an excellent safety record, providing the consumer with high-quality, safe, and fresh products. It is important, however, for all those involved in the manufacture and handling of MA-packed chilled foods to be vigilant about possible food safety hazards, especially in the light of increased regulatory and consumer concern about the perceived rise in food poisoning incidents. It is imperative that the food safety of such products not be compromised by complacency and poor manufacturing or handling practices. Such a situation would seriously compromise the safety of MAP technology and hence its further application as a preservation technique for chilled foods (3).

REPORT ON VACUUM PACKAGING AND ASSOCIATED PROCESSES

The UK Advisory Committee on the Microbiological Safety of Food (ACMSF) has published a report on the potential hazards of vacuum packaging and associated processes such as “sous vide” and MAP (12). Emphasis is placed on the safety aspects of chilled foods, with particular reference to the risks of botulism. Preventative measures have been identified, and possible mechanisms for control have been detailed. Among the many recommendations is one which states that chilled prepared food packed under reduced O_2 levels with an assigned shelf life of more than 10 days should contain one or more controlling factors in addition to chill temperatures to prevent growth and toxin production by *Clostridium botulinum*. Controlling factors include heat treatment, acidity and salt levels, and water activity. The UK government endorses this recommendation and has drawn it to the attention of appropriate trade and professional bodies.

CONCLUSIONS

MAP is still one of the most exciting and innovative areas of the packaging industry. New developments in both packaging materials/machinery and food product applications are being described at an ever-increasing rate. The biggest growth areas are likely to be in easy-opening MA packs and methods for measuring integrity. The MAP chilled-food market in Europe is substantial and has enjoyed considerable growth in recent years because of the important benefits it provides to food manufacturers, retailers, and consumers alike. Although MAP has been used primarily for red meats, tremendous opportunities exist for the MAP of other foods.

BIBLIOGRAPHY

1. www.food and drink europe.com
2. R. Pearson, “The Quiet Revolution. Imperial Chemical Company,” *Plast. Today* **29** (1988).
3. B. P. F. Day, *Guidelines for the Manufacture and Handling of Modified Atmosphere Packed Food Products*, CCFRA Technical Manual 34, Chipping Campden, Gloucestershire, UK, 1992, p. 3.
4. B. P. F. Day, “Novel MAP for Fresh Prepared Produce,” *Eur. Food Drink Rev.* **1**, 73–80 (1996).
5. K. C. Spencer, “The Use of Argon and Other Noble Gases for the MAP of Foods,” paper presented at International Conference on MAP and Related Technologies, CCFRA, Chipping Campden, Gloucestershire, UK, September 6–7, 1995.
6. M. I. Gonzalez and B. P. F. Day, The Effects of Novel Atmosphere Packaging (MAP) on Fresh Prepared Produce Growth, in Proceedings of the Cost 915 Conference, Cuidad Universitaria, Madrid, Spain. October 15–16, 1999.
7. B. P. F. Day, *Fresh Prepared Produce: GMP for High Oxygen MAP and Non-sulphite Dipping*, CCFRA Guideline No. 31. Chipping Campden, Gloucestershire, UK, 2001, pp. 70–75.
8. B. P. F. Day, “Recent Developments in MAP,” *Eur. Food Drink Rev.* **2**, 87–95 (1993).
9. B. P. F. Day, and L. G. M. Gorris, “Modified Atmosphere Packaging of Fresh Produce on the Western European Market,” *ZFL* **44(1/2)**, 32 (1993).
10. G. Robertson, *Food Packaging Principles and Practice*, 2nd edition, CRC press, Taylor & Francis Group, Boca Raton, 2006, pp. 285–311.
11. L. Potter, E. L. Lloyd, and A. J. Campbell, *The Manufacture and Integrity of Seals for Packaged Foods,* CCFRA Review 48, Chipping Campden, Gloucestershire, UK, 2006, p. 23.
12. ACMSF, *Report on Vacuum Packaging and Associated Processes*, Advisory Committee on the Microbiological Safety of Food, HMSO, London, 1992.Information emanating from this Research Association is given after the exercise of all reasonable care and skill in its compilation, preparation, and issue, but is provided without liability in its application and use.

MOLECULAR WEIGHT OF PACKAGING POLYMERS

Kit L. Yam
Department of Food Science,
Rutgers University, New
Brunswick, New Jersey

An important characteristic of packaging polymers is their molecular sizes relative to the much smaller organic or inorganic molecules. The molecular weight of a packaging polymer, a measure of its molecular chain length, can significantly affect the physical properties of the polymer. As molecular weight increases, tensile and impact strengths increase sharply before leveling off, while melt viscosity increases slowly and then sharply (Figure 1).

When selecting molecular weight for a specific application, the strength and melt viscosity should be compromised. The molecular weight should be high enough to acquire adequate strength, but low enough to avoid high melt viscosity, which makes the polymer difficult to process, such as flowing into a mold or through an extruder die. Typically, the practical molecular weight range for packaging polymers is between 50,000 and 200,000 as mentioned above.

Unlike small molecules such as oxygen or water, a polymer does not have a single molecular weight. This is because polymer molecules of different sizes are formed during the polymerization reaction. The relative fraction of different sizes may be characterized using a plot of frequency versus molecular weight, known as molecular weight distribution (MWD), as shown in Figure 2.

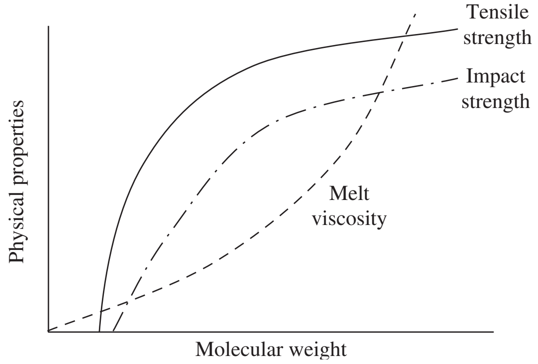

Figure 1. Effects of molecular weight on polymer properties.

Two average molecular weights are often obtained from the MWD. The number-average molecular weight $\overline{\mathrm{M}}_\mathrm{n}$ is defined as

$$\overline{\mathrm{M}}_\mathrm{n} = \frac{\sum_\mathrm{i} \mathrm{N_i M_i}}{\sum_\mathrm{i} \mathrm{N_i}} \tag{6.1}$$

where $\mathrm{N_i}$ and $\mathrm{M_i}$ are the number and molecular weight of polymer molecule i, respectively. The weight-average molecular weight $\overline{\mathrm{M}}\mathrm{w}$ is defined as

$$\overline{\mathrm{M}}_\mathrm{w} = \frac{\sum_\mathrm{i} \mathrm{w_i M_i}}{\sum_\mathrm{i} \mathrm{w_i}} = \frac{\sum_\mathrm{i} \mathrm{N_i M_i}^2}{\sum_\mathrm{i} \mathrm{N_i M_i}} \tag{6.2}$$

where $\mathrm{w_i}$ is weight of polymer molecule i.

The polydispersity index (PDI) is defined as

$$\mathrm{PDI} = \overline{\mathrm{M}}_\mathrm{w}/\overline{\mathrm{M}}_\mathrm{n} \tag{6.3}$$

which is a measure of the spread of the molecular weight distribution. The value of PDI is always ≥ 1. PDI = 1 means that all the polymer molecules have the same molecular weight and thus $\overline{\mathrm{M}}_\mathrm{n} = \overline{\mathrm{M}}_\mathrm{w}$ However, PDI = 1 is difficult if not impossible to achieve; most commercial packaging polymers have PDI greater than 2. A higher PDI is associated with a broader MWD (Figure 2(b)), meaning more variation in molecular weights among the polymer molecules.

A broader MWD tends to decrease the tensile and impact strengths of a polymer but increase its ease of processability, due to the smaller molecules in the distribution acting as a plasticizer or processing aid.

Chain Entanglement

A unique characteristic associated with large molecular weight of packaging polymers is chain entanglement, the ability of polymer chains to become entangled with one another. The degree of chain entanglement increases with length of the polymer chain or molecular weight of the

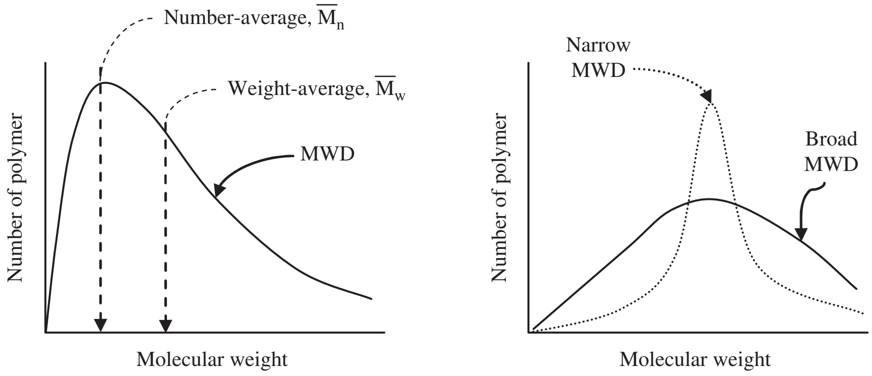

(a) (b)

Figure 2. Molecular weight distribution.

polymer. Polymers consisting of short chains are weak and brittle but become strong and ductile above some critical length. A minimum of 1000 to 2000 repeating units, for example, is necessary for polyethylene to acquire the strength adequate for packaging foods.

Chain entanglement is important for packaging polymers. For example, during thermoforming or blow molding of a thermoplastic, the polymer is in molten state with its molecular chains resembling cooked spaghetti (or, more vividly, wriggling long worms) tangled up on a plate. Chain entanglement holds the polymer chains together but also allows them to slide pass one other, thereby providing both the necessary strength and the pliability for the polymer to be molded into a film, bottle, or other shapes. After cooling, sliding between polymer chains is more difficult and chain entanglement makes the polymer strong and resilient.

Summation of Intermolecular Forces

The physical properties of a material are greatly influenced by the forces (such as dipole–dipole forces, hydrogen bonding, and dispersion forces) between its molecules (see Structure/Property Relationships of Packaging Materials). Although intermolecular forces exist between all molecules, their influences are more pronounced for polymers. Summation of intermolecular forces refers to the total force between neighboring molecules—this total force is particularly significant for packaging polymer molecules due to their long molecular chains.

The effects of summation of intermolecular forces may be observed in the physical states of large and small molecules: for example, polyethylene of solid versus ethane of gas. Except for the difference in size, the chemical structures are the same and weak nonpolar intermolecular forces operate on both compounds. Although weak nonpolar forces are operating in both compounds, the summation of intermolecular forces is much greater for the long polyethylene chains of solid than for ethane gas. Yet polyethylene molecules are held more strongly together due to greater summation of intermolecular forces.

Summation of intermolecular forces and chain entanglement can significantly influence the mechanical, thermal, rheological, and other properties of thermoplastics.

MULTILAYER FLEXIBLE PACKAGING

Thomas J. Dunn
Printpak Inc., Atlanta,
Georgia

Multilayer flexible packaging offers packaged-goods manufacturers the opportunity to match the functional needs of their products precisely to the materials used to package them. The same materials used as complete, sealed flexible packages are also suitable for use as lidding on rigid containers, film covers on carded and blister packs, and wrapping materials. These functional needs, broadly defined, are (a) package appearance, (b) package barrier, and (c) product containment.

Multilayer flexible packaging consists of combinations of metal, plastic, or cellulosic substrates (foils, films, and paper), individually ranging in thickness from 0.0001 in. (0.1 mil or 2.5 μm) to about 0.005 in. (5 mils or 125 μm). The aggregate thickness of the combination is defined by convention to be less than 0.01 in. (10 mils 250 μm). (Thicker composites are typically considered "sheet" materials.) This material is fashioned into various container formats (pouch, bag, wrapper, etc.) that hold a product.

The manufacture of multilayer flexible packaging is known as *converting*. In producing material for a particular application, specific text and related graphic information (e.g., pictorials and use suggestions or bar codes) are typically printed onto one of the substrates. Several processes—*coating, laminating*, and *coextrusion*—then combine this printed layer with others to provide the overall material functionality.

Packaged-goods manufacturers usually buy the composite directly in roll form. They use various types of integrated packaging machinery to form the material into a pouch or bag-like container, fill it with a premeasured product amoount, and finally seal it. Alternately, the converter will fabricate bags or pouches from the composite material. The packaged-goods manufacturer then fills and seals these containers using a variety of manual or automated means.

PACKAGE APPEARANCE

Consumers and industrial users require various visual cues and information on the packages of products they use. Multilayer flexible packages must communicate to these users specific information about the product within: product identification (including for example, name, ingredients and specific type), product quantification (e.g., count, volume, or net weight), manufacturer's identity and address, and warnings about any hazards presented by the product. In addition, manufacturers will usually provide product-use information (with text, icons, and/or pictorials) on the package. If the product is branded, the package must effectively communicate trademarks, logos, and brand colors. The appearance of a multilayer flexible package may also be used to communicate a variety of marketing claims for the product/package (e.g., new formulations, new packaging types/formats nutritional positioning, and compliance with certain religious requirements), promotional efforts of the manufacturer intended to stimulate sales, or linkages to other products. Multilayer flexible packaging provides abundant options to fill these needs.

Materials Options

Multilayer flexible packaging ranges in opacity from totally opaque to completely transparent. In the opaque form, it serves to deliver light-sensitive photographic and

X-ray films to users. When transparent, it can merchandise a variety of consumer products, allowing the would-be buyer to directly view them before purchase. Aluminum foil historically served as the most effective material for blocking light. With mirrorlike spectral reflecting properties, composite materials with foil have come to connote product quality and freshness (1). Metallized plastic films with vacuum-deposited aluminum coatings have been effective in imitating this shelf appearance, but they typically do not provide all the light barrier or other preservative qualities of foil.

A variety of plastic films combine to make transparent multilayer flexible materials. Cellophane, the earliest transparent film, is a cellulosic product; however, as a plain, uncoated material it had severe limitations (2). This material was first used as an unsupported (single-layer) packaging material. In fact, much of the product–process development in multilayer flexible packaging over the past 50 years derives from the need to overcome various use limitations of cellophane (e.g., brittleness from cold-temperature or low-humidity storage). Modern transparent films include polyethylene, polypropylene, polyesters, and nylons, among others. These films can also be pigmented with white, black, or various hues to complement colors printed on the package.

Printing Options

Multilayer flexible-packaging materials are printed using primarily rotogravure and flexographic processes. Unlike traditional lithographic printing process, both flexible material processes lend themselves to the effectively limitless choice of package size available with flexible packaging. These high-quality, high-speed methods provide a full range of textural, machine-readable, and pictorial information. Some materials are printed on their outside surface (surface printing). In such cases, a protective coating is often applied over the ink to protect it from scuffing, chemical destruction, or other abuse. In contrast, the more common practice for multilayer flexible materials is to print on the inner surface of an outer, transparent layer of the multilayer flexible material (reverse printing). The surface is then laminated to the other layers. The outside layer itself then serves to protect the ink from abuse. It also usually presents a very glossy appearance to the package as it is displayed (see also Printing).

PACKAGE BARRIER

Multilayer flexible-packaging materials provide documented levels of barrier to environmental factors: light, moisture vapor, and oxygen (Table 1). These factors can interact with and impair packaged products for which multilayer flexible films provide protection. The materials are generally considered impervious to microorganisms, although packaging shelf-stable processed foods in them requires confirmation of this barrier function down to the level of a submicrometer void (3).

Oxidation of oils fats and vitamins in foods and other products can be retarded by barrier multilayer flexible materials if the oxygen-rich atmosphere within the package is replaced with an inert gas such as nitrogen (gas flush) or evacuated and then sealed under vacuum. Interaction with water vapor can be more dynamic. Dry food (moisture content $<3\%$) and hygroscopic granular products need protection from moisture migrating from a humid exterior into the package. Moist products, including aqueous solutions or suspensions, need moisture-barrier materials that will prevent the loss of product moisture into a low-humidity exterior. Recent advances in controlled and modified atmosphere packaging systems utilize the barrier of flexible multilayer packaging materials to nitrogen, carbon dioxide, and flavors/aromas as well. These barrier functions and standard methods for quantifying them are not generally established in the industry.

Extended Shelf Life

Flexible multilayer packaging is successfully used for retort processing of various food formulations. These "retort pouches" are capable of preserving their contents for 48 months. The primary barrier properties are provided by a layer of aluminum foil or, in a few cases, by a transparent layer of saran (polyvinylidene chloride, "PVDC") film or aluminum-oxide/silicon-oxide-coated plastic films.

Industry-standard practices are established for the safe and reliable production of these packaged products (4).

Shelf-life extension is also achieved in practice by aseptic packaging of sterile products. In this process, a sterilizing technique, such as a steam or hydrogen peroxide bath, or exposure to an electron beam, is used to clean the product-contact surfaces of the flexible multilayer material

Table 1. Typical Transmission by Selected Flexible Materials[a]

			Transmission Rate	
Gauge (mil)	Material	Optics: Haze or Optical Density	Moisture vapor	Oxygen
1	LDPE	6% (haze)	0.8	>100
1	HDPE	30% (haze)	0.35	>100
0.7	Oriented polypropylene	1.6% (haze)	0.49	90
0.5	Oriented polyester	2.5% (haze)	2.8	6
0.5	Oriented nylon	3.0% (haze)	24	4
0.7	Metallized-oriented polypropylene	2.3 (OD)	0.02	8
0.5	Metallized-oriented polyester	3.0 (OD)	0.05	0.08

[a] Values as supplied by various commercial film suppliers. Moisture-vapor values: g/(100 in.^{2} · 24 h) at 100°F and 90% RH. Oxygen values: ml/ (100 in.^{2} · 24 h) at 100°F and 90% RH.

in a sterile environment. Then, while still in a sterile environment, a commercially sterile product is packaged in this material and hermetically sealed.

The barrier properties of flexible multilayer packaging materials are typically not as dependable as that of rigid packages (e.g., metal cans and glass bottles) traditionally used for extended shelf-life packaging. This is the result of (a) imperfections in the thin layer of materials involved, (b) measurable transmission of oxygen through fabricated multilayer polymeric containers, and (c) voids in heat-sealed (i.e., welded) areas of the fabricated containers. Ongoing research is directed toward developing reliable, nondestructive testing of 100% of flexible pouches containing long-shelf-life processed foods (3) (see also Shelf Life).

Material Barrier Properties

The barrier presented by a plastic film to migrating gaseous molecules is a complex property of that film (see also Barrier Polymers). It is considered to be a mass-transport phenomenon in which the gas first dissolves into the polymer; then, it diffuses through small voids in the polymer in response to the net gas concentration differences on either side of the polymer; and finally, desorbs and leaves the polymer on the side of lower concentration (5). In practice, the industry uses an equilibrium (isostatic) technique in which a constant concentration gradient for the permeating gas is maintained across the film. In this steady-state condition, transmission of the permeant is expressed as a mass (or standard volume) of the permeant per unit area in a 24-h period. Ambient temperature and film thickness are also reported (6). Table 1 provides a summary of barrier performance for commonly used films.

The barrier to migrating gaseous molecules presented by aluminum foil is not characterized by this plastic film model. Foil, free from small voids as in polymers, is a perfect barrier to migrating molecules. With the inevitable pinholes in foils (representing $<0.001\%$ of the surface area), however, the transport mechanism is one of flow through orifices (7). At the point of flow, the polymeric model applies, if the foil is laminated to a plastic film.

Barriers to Organic Volatiles

Food and nonfood products often contain volatile components critical to the utility and purpose of that product. Inside a sealed flexible multilayer package, these components can volatize into the headspace of the container. In this mobile form, they can dissolve and diffuse through a polymer film, much like environmental gases. If the solubility and transmission rates are of sufficient magnitude, product shelf life can be significantly decreased. Similarly, volatiles from the enviroment external to the package or from packaging materials themselves can desorb into the package headspace and contaminate products inside. While a variety of proprietary studies have been reported, attempts to develop standardized methods and measures for typical volatiles have gained the support of industry participants only very recently.

Table 2. Materials Properties of Interest

Property	Reference
Ultimate tensile	ASTM D882
Tensile at elongation	ASTM D882
Elongation at break	ASTM D882
Secant modulus	ASTM D882
Density	ASTM D1505

PRODUCT CONTAINMENT

This function of multilayer flexible packaging is the most complex, and perhaps the most critical. If the material fails to contain its product properly, its intended appearance and barrier performance are quickly compromised. Containment relies on the physical strength of the composite material to deliver a product securely to its intended market. It also depends on the ability to “seal” packages by using heat and/or pressure to weld opposing surfaces of a two-dimensional leaf of material into the three-dimensional container (e.g., pouch, bag).

Physical Strength

Standard physical measures of material strength are used to characterize films, foils, and papers. Table 2 summarizes typical properties of interest. The specific product to be packaged dictates the level of strength (as measured by any particular physical property) that a composite flexible material must have. For example, dried soup mixes and ground coffee contain small, sharp, granular particles that can readily puncture or rub through a material unless “puncture resistance” is adequate. The actual environmental contexts within which punctures take place are complex and dynamic—so much so that traditional strength of materials measurements taken alone are not sufficient predictors of success in a given application. The pouch of dried soup mix, for example, is typically sold as a multipack inside a paperboard carton. Through distribution and storage, any pouch face in direct contact with the paperboard will experience abrasive forces greater than ones rubbing against other pouches. To satisfy the need to specify materials without the time and expense of dynamic simulation or actual field testing, a variety of specialized tests with associated testing apparatus have been developed to discriminate among the relevant performance levels of various materials (Table 3). Many of these have been adapted from the paper industry where analogous

Table 3. Specialized Materials Properties

Property	Reference
Tear strength	TAPPI T414
Dart drop impact	ASTM D4272
Puncture	ASTM F1306
Burst	TAPPI T403
Flex durability	ASTM F392
Abrasion resistance	ASTM F735
Bond strength	ASTM F904

needs for distinguishing among materials in nonpackaging uses have long been recognized.

The growing interest in packaging relatively large volumes of liquids (i.e., >200 mL) demands a new level of strength in multilayer flexible-packaging materials. Linear low-density polyethylene (a copolymer of ethylene and longer-chain α olefins, typically octene) is the material of choice for such applications. Its tensile strength and elasticity can withstand the surges of hydraulic pressure as liquids in pouches are compressed during shipping and handling. Laminating this film to oriented-polyester film with its high tensile strength provides a reinforced composite material with the ability to contain several liters of liquid. This film laminated to oriented-nylon film for its high puncture strength might be the choice if the package must withstand small diameter puncture abuse.

Heat-Seal Strength

Obviously, the container made of a multilayer flexible material can be no stronger than the seals that weld it together. Seals are typically made by applying pressure with heated surfaces to opposing faces of the composite materials, melting the thermoplastic material of the contacting surfaces. The two surfaces then fuse together as the thermoplastics cool.

Cohesive coatings are the major exception to heat sealing. Such coatings are similar to pressure-sensitive ones in that they will adhere when they are applied with pressure to another surface. Unlike pressure sensitives, cohesives adhere only to surfaces coated with similar coatings. In practice, cohesive coatings are applied in a perimeter pattern on the inside surface of a packaging film. The cohesive property allows this pattern-coated film to be unwound from roll form on a packaging machine. The package is formed around a product using only pressure to adhere the opposing cohesive surfaces. Heat-sensitive products, such as chocolate bars, can be wrapped in this manner without melting. Packaging line speeds can also be increased as the sealing pressure can be transmitted to the interface essentially instantly (8). Heat sealing, in contrast, requires time to raise the interface temperature to the melting point because the heated surfaces can contact only the opposite side of the surface to be sealed.

The process of making heat seals relies on the basic thermoplastic properties of the polymers on the inside of a multilayer flexible package (the "seal" layer) (9). In theory, this welding process involves a dynamic fluid material moving under pressure. However, heat-sealing practice for the most part ignores the rheological properties of the molten polymer and uses a static set of temperature, pressure, and time variables to control the heat-sealing process on packaging machinery. A matched pair of sealing "jaws" is maintained at constant temperature and brought together with the packaging material between them. Assuming that the packaging machine's pressure settings are correct, the thickness of the material and the minimum distance between the jaws dictate the pressure at the sealing interface. The "dwell" time during which maximum pressure is maintained is dictated by the line speed of the machinery. The process assumes that the outer layers of the multilayer flexible-packaging material are themselves sufficiently heat-resistant to avoid melting. Paper and cellophane can easily withstand sealing temperatures, typically 250–350°F. Heat-set oriented-plastic films of nylon, polyester, or polypropylene are the usual thermoplastic options. Pressure effects at the interface of seal layers can be enhanced by using serrated or ridge surfaces on the seal jaws that mate with complementary patterns in the closed position. (In theory, such shapes can be used to impart shear forces to the molten polymers. This would cause stronger welds more quickly.) Various preheating techniques (e.g., infrared lamps or heated guide surfaces) have been developed to speed up the process of melting the interface layers. New grades of "metallocene polyethylene'" (linear low-density polyethylene, polymerized using catalyst systems made of metallocene materials) have densities lower than traditional grades. As a result of this combination of density and chemical composition, such products have strength and the ability to seal faster and/or at lower temperatures. (See Sealing, Heat)

While the integrity of the package itself depends on reliable seals, consumer access to the packaged products can require that the seals be broached with relatively little effort. Such "easy-open" seals have been accomplished by a variety of means (Figure 1). One major technique ("seals") involves using a thin layer of low-melt-point polymer as the seal layer. This is welded to itself in the sealing process. As the consumer pulls on the seal to open the pouch, the thin layer breaks away from the other layer(s) of the multilayer material. This allows access to the interior of the package past a layer that was previously buried within the composite material. Alternatively, the seal layer can be contaminated with an immiscible material that is blended into the polymer that will actually melt to form the weld. This can be either an inorganic material or an immiscible polymer with a higher melt point. When the seal is made, the welded area is decreased by the amount of interface area comprised of the "contaminate." This is designed to be large enough to allow access to the package interior by

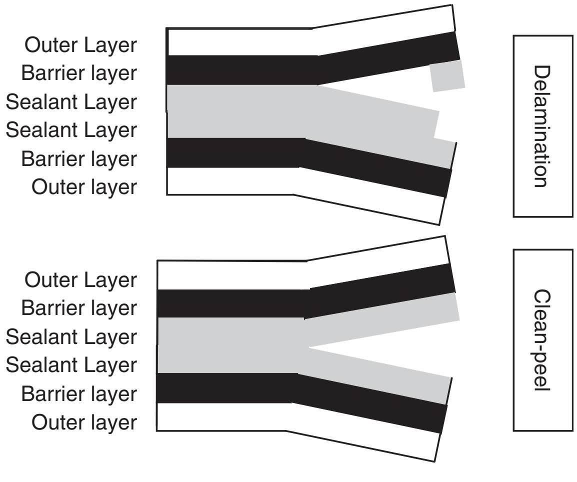

Figure 1. Easy-open seal types.

using a specified force to separate the original seal interface ("clean-peel seals").

Reclosing flexible packages remains an industry challenge. Dry products (e.g., cereals, snacks, cookies, crackers, and pharmaceutical products) can quickly lose their crispness in an opened package. And moist products, such as shredded cheese, can dry out, particularly in refrigerated air. Pressure-sensitive tapes and interlocking plastic ridges (plastic "zippers") are used in several applications at present. Widespread adoption of recloseable features for flexible packages awaits a reliable, low-cost technique. Alternatives to separate pieces of pressure-sensitive tapes have been developed that actually incorporate pressure sensitive layers into the multilayer structure (10). Recloseable zippers for packages have been enhanced with rigid "sliders" that are easily gripped and reliably press the zipper "ridges" together into the closed position (11).

MANUFACTURING MULTILAYER FLEXIBLE PACKAGING

The converting operations for manufacturing multilayer flexible packaging are printing, laminating, and finishing processes. Such operations are designed and equipped to convert a variety of raw materials into many kinds of customized products. Even within a specific category of packaged product, the actual multilayer flexible packaging specified by one customer may differ dramatically from that purchased by another. Differences in product formulations, packaging machinery, distribution systems, and marketing approaches combine to require different levels of appearance, barrier, and containment. These functional differences, in turn, dictate differences in specified raw materials.

Printing

Flexible packaging printing involves both flexographic (images on rubber plates that stamp ink onto a substrate) and rotogravure (images etched into metal cylinders that release ink to a substrate from small engraved cells) printing processes. The choice between processes is now primarily one of customer preference. Historically, converters specializing in foil and opaque packaging were rotogravure printers. Until the 1980s, this process was the only one capable of reproducing quality continuous tone (pictorial) graphics. Flexographic printers were more common among cellophane and plastic-film converters, where transparent packaging required only basic text printing. Flexographic continuous-tone printing has become much more acceptable for high-quality graphics over the past 10 years. With consolidation of converters within the industry and internal diversification by the remaining suppliers, this distinction of capabilities along opaque and transparent substrate lines has virtually disappeared.

Both printing processes use liquid inks comprised of colored pigments, a polymeric "vehicle" (binder), and a volatile solvent. The solvent (an organic liquid or water) is evaporated from the printed substrates as the vehicle solidifies and adheres to the printed substrate. Each of these three ink components must be selected to meet various functional and environmental requirements (12).

When the printed surface is to be the outside of the outer layer of the multilayer flexible package, a protective layer, or overprint varnish, is often applied over the ink to prevent scuffing and to provide a high-gloss effect. This coating must also be resistant to hot sealing jaws that will contact it as heat seals are made. In contrast, when the printed surface is on the inside of the outer layer, the ink must be formulated to adhere to the material that will be used to bond it to the next layer. It must also have an internal strength sufficient to support the overall strength requirements of the entire multilayer material. These properties must be maintained at the temperatures that the ink will experience during heat sealing and any thermal process of the product in the package.

Adhesive Laminating

The majority of adhesive laminations in multilayer flexible packaging are manufactured using the dry-bond process. In this technique, a liquid adhesive is applied to one substrate. Any one of a number of web-coating methods (e.g., direct, offset, or reverse gravure; wirewound rods; air knife) is used to meter and apply the adhesive onto the substrate. The adhesive coating is then dried with hot air. This dried surface can be adhered to a second substrate using heat and pressure at a nip point. The newest generation of flexible packaging adhesives involve 2 or more liquids comprised of reactive prepolymeric chemicals. When mixed, these so-called 100% solids adhesives undergo chemical reactions that essentially bind up all of the applied coating materials into a solid layer of cross-linked adhesive. No volatile diluents need be evaporated from the coatings to achieve the solid layer.

The adhesive formulations themselves represent a reactive chemistry (typically urethanes or acrylics) that is chosen to withstand the processing and distribution environment of the filled product. This can be high temperatures of retort processing (280°F), migrating volatile organics that can redissolve adhesive solids, or other packaging components that can interact to discolor components of the lamination. Because the adhesives are reactive chemicals that are expected to polymerize and/or crosslink when coated, government food-additive regulations control the presence of any unreacted residuals in the composite materials (13). (See also Adhesives.)

Extrusion Lamination

Extrusion lamination involves using a thin (as low as 0.3 mil or 9 μm) layer of plastic (typically low-density polyethylene (LDPE) or a copolymer of LDPE) to bond together two layers of film, paper, and/or foil. The method has the advantage over adhesive laminations of adding substantial thickness to a multilayer lamination as well as contributing to the overall strength of the material. It grew out of the process of coating paperboard with low-density polyethylene (an alternative to wax coatings for such packages as milk cartons) (14). At present, the technique accounts for the majority of printed multilayer flexible packaging.

The process enjoys significant cost advantages over the alternative of producing separate thin layers of polyethylene and using dry bond adhesives to adhere the separate layers together. It has no environmental emissions and permits the processing of thinner layers of plastic than can be handled otherwise. The intrinsic adhesive affinity of low-density polyethylene (LDPE) toward other substrates is limited. However, a variety of LDPE copolymers, adhesion primers, and processing aids have been developed to broaden the applicability of the method (15).

Coextrusion

The cost advantages of extrusion laminations are exploited in the extreme in the coextrusion process. This method entirely eliminates the use of any separately manufactured substrates. It simultaneously extrudes several layers of molten plastic into a single multilayer material. Each plastic maintains its identity as a separate layer in the film and can contribute various functions accordingly. For example, a coextruded film of nylon, ethylene vinyl alcohol, and ionomer provides, respectively, heat resistance, oxygen barrier, and low-temperature sealing for the material used to vacuum-package processed meats. Of course, a pure coextruded film precludes the use of (a) reverse-printed substrates and (b) paper and foil entirely. However, hybrid processes in which a multilayer extruded curtain is used to "coextrusion-laminate" or "coextrusion-coat" traditional substrates have been developed.

Coextrusion has proven to be a powerful option for achieving a mix of functional features in ultra-thin-base films. In effect, base-film suppliers can mix and match materials in a manner analogous to a converter's lamination processes. For example, a current standard seal layer for snack food packaging is a coextruded oriented-polypropylene film comprised of a $\sim 0.05\,\text{mil}$ (1-μm) bonding layer for metal adhesion, a core layer of $\sim 0.6\,\text{mil}$ (15-μm) of homopolymer polypropylene, and a seal layer of $\sim .01\,\text{mil}$ ($2\,\mu$m) of propylene–ethylene copolymer. This film is vacuum-metallized and extrusion-laminated to a reverse-printed 0.7 mil ($18\,\mu$m) oriented-polypropylene film to provide a strong, easy-open package with excellent light and moisture barrier and sufficient oxygen barrier to maintain an internal nitrogen-flush headspace for about 3 months.

Finishing

The converter will print and laminate multilayer flexible-packaging materials in typical widths of 40–60 in. (1–1.7 m). These are usually wider than the rolls that a packaging machine can form, fill, and seal. The converter then slits the wide rolls into several narrower lanes suitable for the customers' machines. This product is then sold in roll form to the customer in very compact form. A typical 0.003-in. (75-μm)-thick multilayer material wound on a core 3 in. (75 mm) in diameter can be delivered in 18-in. (450-mm)-diameter rolls containing about 7000 packages 12 in. (300 mm) long.

An alternative to multilayer flexible packaging in rolls is the premade bag or pouch form. For this product, the front and back of the pouch are printed side-by-side. This single package is folded longitudinally and heat-sealed inside-to-inside along the fold and two of the other three sides. These flat pouches are sent to the customer, who fills them with product and seals shut or otherwise closes the fourth side.

CURRENT TRENDS IN MULTILAYER FLEXIBLE PACKAGING

Innovation has been a reliable characteristic of flexible packaging over past decades (16), and significant development efforts continue to introduce new flexible films and composites that improve package functionality in essentially all of the areas discussed here. Recently, two emergiing issues, packaging sustainability and active/smart packaging, have emerged to further drive industry inovation.

Appearance

New technical processes for achieving appropriate quality for the graphical images reproduced on flexible packaging materials are being actively developed in the first decade of the 21st century. Increasingly, graphics origination, review, and appproval efforts are accomplished using Internet-based exchange of digital files. Such files are in turn used to generate digital printing media (flexo plates or cylinders). Techniques exist to actually drive digital print engines to print flexible packaging materials, but are not widely used at this writing because of ink costs and limited throughput.

Advanced digital controls on printing presses permit the adoption of "expanded color gamut" printing. This technology tracks the color value and printed density of six or seven standard colors (compared to the four traditional "process colors": cyan, magenta, yellow, and black) in order to provide specific colors and color effects with regularity and consistency between production lots.

Criminal efforts to market counterfeit branded goods have stimulated the development of various appearance techniques to authenticate the source of packaged goods in the market place. These include overt (visible to the consumer) methods as holographic reproductions. Covert means (such as fluorescent inks) support scrutiny of wholesale or retail stocks by trained agents of producers or buyers of the packaged goods.

Barrier

Transparent alternatives to opaque foil and metallized multilayer barrier materials increasingly find their way into commercial packages. The most common of these are ceramic or metallic oxides (for example, silicon and aluminum oxides) that are deposited on plastic films in vacuum coating operations comparable to those used to produce widely used metallized barrier materials. The oxide vapors are produced with evaporative methods from solid forms of the compounds or with reactive methods in which precursors of the oxides are introduced into a chamber and plasma or chemical reaction energy used to form the oxides. Other transparent coating techniques have been developed to combine the oxygen barrier properties of polyvinyl alcohol with the moisture barrier properties of a metallic-compound-containing material (17).

Nanotechnology in flexible barrier materials is most evident in attempts to disperse nanometer-thick platelets of naturally occurring clay minerals in polymers. The objective is to arrange the platelets so as to form a "tortuous path" for gaseous molecules that would permeate through a polymer layer. The technology is now best practiced with polymers, such as nylon and ethylene vinyl alcohol, that have regions of relativlely strong electrostatic polarity distributed throughout them. Nonpolar molecules, especially polyolefins, are unable to break apart the natural clay particles to achieve the needed distribution of platelets in the polymer. Research into the use of surfactants (with their distinct polar and nonpolar ends) has shown promise in effectively dispersing platelets into polyolefins.

Containment

Ironically, flexible packages seem to be trying to become more rigid, at least stiff enough to stand up. The Doyen standup pouch concept has been used for hot-fill juice containers for over three decades (18). European and Japanese consumers are exposed to many other commercial examples at present. In the United States, many domestic market introductions have succeeded. The format is now a mainstay for consumer products in the States. In the 2007 Flexible Packaging Association (FPA) Achievement awards and Innovation showcase, 13 Doyen-style pouches were recognized (19). Further evolution includes pouches shaped to suggest their prior rigid package formats, such as (a) bottles or jars (three such examples were included in the 2007 FPA awards) and (b) pouches fabricated with flat bottoms perpendicular to distinct side panels (six such examples included in the 2007 FPA awards).

Ease of opening for flexible packaging has emerged as a significant challenge to growth for the industry (20). An aging population with decreasing manual dexterity has come to demand easy-opening flexible packaging and can recognize the differences, as "Consumer Reports" found with three different brands of ready-to-eat cereal with flexible coextruded film liners in folding cartons (21).

Packaging Sustainability

By nature, multilayer flexible packaging contains many materials intrinsically bonded together. This fact mitigates against recycling the component materials, as has been possible for many monomaterial packaging systems (e.g., HDPE merchandise bags and milk bottles, PET beverage containers, aluminum cans, and glass bottles; note that some progress has been made in separating at least some components of multilayer materials for economic recovery) (22). Rather than minimizing packaging residuals after use by recycling, the flexible-packaging industry has been urging consumer and regulatory consideration of the advantages of using less packaging material for a product as it is put into commerce (23). Flexible-material packaging systems offer significant reduction of both waste volumes and weights when compared to traditional systems. A few of these are summarized in Table 4.

Table 4. Flexible-Packaging Source Reduction

Packaging System		Reduction (%)	
Baseline	Reduced	Weight	Volume
Coffee can	Brick pack	70	55
Detergent bottle	Concentrate pouch	85	84
Diaper carton	Film bag	85	86
Soup can	Soup pouch	93	97
Glass bottle	Flexible pouch	96	82
Glass bottle	Drink box	90	70

Source: Flexible Packaging Association.

Other strengths regarding sustainable industrial development practices exhibited by flexible packaging come from the ability to use "biopolymers," polymers from carbon sources grown in contemporary farming, forestry, or aquaculture systems, rather than from fossil fuels. Modified starch has been extruded into film and fabricated into bags. Lactic acid has been extracted from corn and then polymerized into polylactic acid. Numerous flexible barrier packages have incorporated this material into commercial packages at this writing.

Active/Smart Flexible Packages

"Active packaging" (packaging that changes conditions and/or environment in the package to extend shelf life,

Table 5. Active and Smart Packaging Types

Package Type	Example Source	Integral/Separate
Active		
Microwave susceptors	Graphic Packaging	Integral
Purge absorbers	Maxwell Chase	Separate
Oxygen absorbers	Mitsubishi Ageless®	Separate
Oxygen indicators	Toppan	Separate
Oxygen scavenging film	Cryovac	Integral
Carbon dioxide controller	Guinness Widget	Separate
Antibody immobilizer	Toxin Alert, Inc.	Separate
Temperature reliant permeation	Landec Intelimer®	Separate
Volatiles: absorption/ release/transmission	CSP Technologies	Integral
Odor controllers	Cell Resin Technologies,	Integral
Antimicrobials	Englehard	Integral
Smart		
Antitheft devices/tags	Sensormatic	Separate
Temperature indicators	Tempilabel	Separate
Time-temperature integrators	3M	Separate
Quality/spoilage indicators	Cox Technologies, Inc.	Separate
Ripeness indicators	Ripesense Limited	Separate
RFID	Alien Technology	Separate

enhance sensory properties, and/or improve food safety) and "smart packaging" (packaging that senses change and/or changes package properties) technologies have long been recognized in the packaging industry as possible, but for a variety of commercial and legal issues have not been widely adopted in the U.S. consumer market. The European Union, in contrast, has actively encouraged commercialization of the technologies. The European "FAIR" Project CT98-4170 sought "[t]o enable the application of active and smart concepts throughout Europe and to establish and implement these concepts in the current relevant regulations for food packaging in Europe." In their view, "Active packaging … will likely emerge as the preservation technology of the twenty-first century" (24).

Cooksey reported on commercial applications of active and smart packaging technologies in 2006 (25) A summary of these examples is given in Table 5. The table also indicates whether the technology is "integral" to the packaging material or a "separate" label, sachet, or other device incorporated into the package.

As is apparent here, much of the commercial and proposed application of active/smart packaging technology intends the use of separate and additional components in or on the package (along with the product itself) rather than a packaging material that inherently provided the functionality itself. Such merged material performance is the subject of much current research (26).

BIBLIOGRAPHY

1. Aluminum Association, *Aluminum Foil*, 2nd edition, Washington, DC, 1981.
2. W. A. Jenkins, and J. P. Harrington, *Packaging Foods with Plastics*, Technomic Publishing, Lancaster, PA, 1991, p. 34.
3. B. Blakistone, "New Developments in Plastic Packaging Seal Integrity Testing: One Key to the Future of High Speed Plastic Packaging" in *Proceedings of the 1994 IOPP Packaging Technology Conference*, Institute of Packaging Professionals, Herndon, VA, 1994.
4. ASTM, F1168, *Standard Guide for Use in the Establishment of Thermal Processes for Foods Packaged in Flexible Containers*, American Society for Testing and Materials, Philadelphia, 2000.
5. Michigan State University, School of Packaging, "Product Storage Stability Based on the Permeability of the Package Storage System," Course Notes, July 10–13, 1984, East Lansing, MI, 1984.
6. ASTM, D3985, *Standard Test Method for Oxygen Gas Transmission Rate through Plastic Film and Sheeting Using a Coulometric Senso* and F1249, *Standard Test Method for Water Vapor Transmission Rate through Plastic Film and Using a Modulated Infrared Sensor*, American Society for Testing and Materials, Philadelphia, 2005.
7. British Aluminium Foil Rollers Association, *Barrier Properties of Aluminum Foil: A Handbook*, London, 1973.
8. R. J. Ginsberg, "Cohesive Coatings Offer Food Field Cost Advantages, Higher Speeds," *Packag. Devel. Syst.* **July/August**, 23–35 (1979).
9. T. Dunn, "Use of Differential Scanning Calorimetry in Developing and Apply Films for Flexible Packaging" in M. L. Troedel, ed., *Current Technologies in Flexible Packaging*, ASTM STP912, American Society for Testing and Materials, Philadelphia, 1984.
10. L. S. Timm and T. E. Bublitz, U.S. Patent 5,993,962, "Resealable packaging system," November 30, 1999; and S. J. Strauss et al., U.S. Patent 5,089,320; "Resealable packaging material," February 18, 1992.
11. D. Van Erden, U.S, Patent 6,112,374; "Zipper for slider package," September 5, 2000; and T. J. May, U.S. Patent 6,491,432, "Resealable closure mechanism having a slider device and methods," December 10, 2002.
12. T. Dunn, "Flexible Packaging and Environmental Control in the 80's and 90's," in *Proceedings of Envirocon '89*, The Packaging Group Inc., Princeton, NJ, 1989.
13. U.S. Food and Drug Administration, "Indirect Food Additives: Adhesive Coatings and Components," *Code of Federal Regulations, Title 21, Part 175*.
14. T. Bezigian, "Extrusion Coating and Laminating—The Growth of an Industry," *Converting Mag.* (Part I, p. 48ff., January 1992; Part II, p. 30ff., February 1992).
15. R. Isbister, "Chemical Priming for Extrusion Coating," *J. TAPPI* **71**(5), 101–104 (1988).
16. T. Dunn, "Flexible Packaging 1994: Issues, Trends, and Life Cycle Analysis," in *Proceedings of the TAPPI International Packaging Symposium*, Chicago, July 1994.
17. H. Ohba, et al., U.S. Patent # 6,605,344;"Gas-barrier films"; August 12, 2003; 16 pp.
18. A. Brody, "The Source Reduction Pros and Cons of Liquid Stand-up Pouches" in *Proceedings Green Packaging '94 Conference,"* Packaging Strategies, Washington, DC, June, 1994.
19. Anonymous, "Honoring Innovation: 2007 Flexible Packaging Achievement Awards and Innovation Showcase"; Flexible Packaging Association, Linthicum, MD, March 2007, 36pp.
20. Anonymous, "The Oyster Awards: Consumer Reports's Hard-to-Open-Packaging Hall of Shame Welcomes New Inductees," *Consumer Reports*, March 2007.
21. Anonymous, "The Oyster Awards: Consumer Reports's picks for America's hardest-to-open packages," *Consumer Reports*, March 2006.
22. E. Klein, "The Greening of Coated Paperboard" in *Proceedings of the TAPPI Polymers, Laminations, & Coatings Conference,* Nashville, TN, August 1994.
23. T. Dunn, "Source Reduction Needs Defining to Have Maximum Impact," *Packag. Technol. Eng.* **3**(4), 44–47 (1994).
24. L. Vermeiren, et al., 1999; "Developments in the Active Packaging of Foods" in *Trends in Food Science & Technology*, Vol. 10, Elsevier Science Ltd., Amsterdam, pp. 77–86.
25. K. Cooksey, "General Overview of Active and Intelligent Packaging," in *National Plastics Exposition-Educational Conference*, Chicago, IL, June 21, 2006.
26. A. L. Brody, et al., *Active Packaging for Food Applications*, CRC Press, Boca Raton, FL, 2001, 236 pp.

N

NANOCOMPOSITE PACKAGING MATERIALS

M. D. Sanchez-Garcia
J. M. Lagaron
Novel Materials and
Nanotechnology Lab., IATA,
Valencia, Spain

NANOCOMPOSITES CURRENT INTEREST AND APPLICATIONS IN FOOD PACKAGING

Nanotechnology is by definition the creation and use of structures with at least one dimension in the nanometer-length scale that creates novel properties and phenomena otherwise not displayed by either isolated molecules or bulk materials. Since Toyota researchers in the late 1980s found that mechanical, thermal, and barrier properties of nylon-clay composite materials improved to a significant extent by reinforcement with less than 5% of clay (1), extensive research work has been performed in the study of nanocomposites for packaging application. The term “nanocomposite” refers to composite materials that contain typically low additions of some kind of nanostructured materials. Most nanocomposites being considered in the packaging sector are based in low additions, typically 1 to 7 wt.-%, of modified nanoclays.

Nanoscale structures display a high surface-to-volume ratio, which becomes ideal for applications that involve composite materials, chemical reactions, drug delivery, controlled and immediate release of substances in active an functional packaging technologies, and energy storage, for instance, in intelligent packaging (2, 3).

Until recently, the most interesting packaging technology based on blending to generate barrier properties was the so-called oxygen scavengers. This technology is known to lead to relatively low levels of oxygen in contact with the food because it traps permeated oxygen from both the headspace and the outside. However, in carbonated beverages for instance, a barrier to carbon dioxide is also a requirement. As most commodity plastic packaging materials, e.g., polyethylene terephthalate (PET) and its main sustainable counterpart the PLA, are not sufficient barrier to these gases, multilayer structures had to be devised in which one layer (made of Ethylene vinyl alcohol copolymer (EVOH), MXD6, polyethylene naphthalene (PEN), and nanocomposites of PA6) needs be high barrier to carbon dioxide and to oxygen. An alternative, technology is the use of oxygen scavenger but these only reduce O_2, and not CO_2, at the packaging headspace. The nanobiocomposites technology can overcome this in monolayer solutions because barrier properties are usually not only to oxygen but also to other gases and low-molecular-weight components such as water vapor and food aroma components (4).

In general, the rationale behind the interest of the nanocomposites is that with low additions of the nanofiller, many relevant properties can be enhanced without a significant drop in interesting properties of the matrix such as transparency or toughness. As stated above, one property that has attracted more interest in the food-packaging area, because of its direct implication in food quality and safety issues, is the possibility of increasing the barrier properties to gases and vapors of plastics and bioplastics. Thus, by simple application of models such as the one of Nielsen, and for the case of laminar structures with high aspect ratios (L/2W of 180), the model predicts permeability reductions of the matrix of up to about one order of magnitude for fractional volume (φ) layered clay additions of ca. 0.05 (see Figure 1).

In this technology, it is reckoned that the presence of exfoliated layers of clay in the polymer results in enhancement of the so-called tortuosity (or detour) factor. The equation in Figure 1 shows a simple formalism to model permeability of systems comprising impermeable plates of a layered filler oriented perpendicular to the permeant transport direction and evenly dispersed across the polymer matrix. The use of other models such as the one of Cussler predicts even higher permeability reductions but most experimental data with barrier improvements below 10-fold fit better the above Nielsen model (5).

Numerous studies in the literature report that experimental improvements in barrier properties to water vapor, i.e., about 60% permeability reduction in polyvinyl alcohol (PVOH) (6) and even larger in gluten at 11% relative humidity (RH) (7), and to oxygen [above 75% in EVOH (8–10) and up to 64% in polylactic acid (PLA) (11, 12)], can be achieved via polymer nanocomposites. It is therefore a proven fact that the integration of ceramic nanoparticles with tailor made modifications in plastics matrices does help increase the barrier to oxygen and vapors and reduce the water sensitivity of biopolymer matrices.

There are several technologies to achieve nanodispersion, namely, in situ polymerization, dispersion in solution, and dispersion by melt blending. The latter route is perhaps the most interesting methodology from an applied view point because it can be used more widely to convert most plastics into final articles (13–15).

Nanoclays are currently being considered as barrier layers in multi-layer packaging to improve barrier

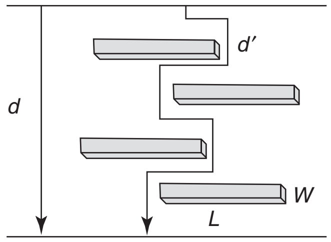

$$\frac{P_{nano}}{P_{matrix}} = \frac{1-\phi_{clay}}{1+\dfrac{L}{2W}\phi_{clay}}$$

Figure 1. Schematics showing the tortuosity effect imposed by nanolayered clays to the transport of low-molecular-weight components through a film and a typical model equation that takes this effect into account in the permeability coefficient.

properties and extend shelf-life (16). The fastest growing barrier application for nanoclays is bottles for beer, carbonated soft drinks and other carbonated beverages (17) and film applications (18).

Most nanocomposite technologies make use of chemical or otherwise modifications of layered 2:1 phyllosilicates (19). The modification is needed both to compatibilize highly hydrophilic clays with the more organic apolar chemical constitution of most plastic materials and to increase the clay intergallery space (basal space between adjacent layers), which facilitates both intercalation and exfoliation of the clays laminar components in the matrix during compounding. In the food chain, specific caution should be taken because the applied modifications should be harmless, comply with migration regulations, and make use of food contact approved substances as valid modifiers. Unfortunately, for most technologies and producers, this is not the case, and it will limit the implementation of the nanocomposites in the food packaging sector.

In this context, it is well known that most nanocomposite formulations (first generation nanocomposites) in the market are currently making use of some not European union (EU) listed ammonium salts as organophilic chemical modifiers, which have been devised to enhance the properties of engineering polymers in structural applications. However, as mentioned above, for food-packaging applications, only food contact approved materials and additives should be used, and they should do so below their corresponding threshold migration levels. In this respect, Nanobiomatters S.L., Paterna (Spain) and its second-generation nanocomposite products traded as NanoBioTer® claim to comply with the current food contact legislation. Second-generation nanocomposites are therefore referred to as nanocomposite technologies, which are specifically designed to comply with current regulations and at the same time are cost effective and specifically formulated to target specific materials (including biopolymers), materials properties, or production technologies. In essence, second-generation nanocomposites are materials with targeted specifications rather than wide-spectrum generic formulations.

Despite the fact that multilayer solutions are currently needed in many food-packaging applications including the above-mentioned carbonated beverages, a monolayer solution would be of great interest for many reasons, including recyclability, a technology, and material costs. The nanocomposites technology can also make this possible by simple melt or solution blending routes. The reason why in PET bottles, nanocomposites are still devised to be used in multilayer systems (such as Imperm™ nanocomposites of PA from Nanocor) is because PET nanocomposites are extremely difficult to obtain in a monolayer case because of the high temperature needed to process the polymer, which causes degradation of the organophilic chemical modification of the layered clay particles.

Companies are already developing packaging materials based on nanotechnologies that claim to extend the shelf life of foods and drinks. Several large beer makers, including South Korea's Hite Brewery and Miller Brewing Company, are already offering the technology. However, nanocomposites for packaging have been developed for a limited number of polymers, e.g., PAs, thermosetting epoxies and, to some extent, PET (20), and their food contact status remains unclear.

Table 1 summarizes the companies and the barrier technologies that have been developed for improving the properties of thermoplastics materials. From Table 1, nanoclay companies developing nanocomposite materials in the food-packaging sector are NanoBioMatters S.L. and Nanocor (part of Amcol International). Nanobiomatters S.L. (Paterna, Spain) offers a wide range of commercially available food contact compliant nanoclays and plastic masterbatchs for enhancing physical properties such as barrier to gases, vapors, and ultraviolet (UV) light and thermal and mechanical properties, as well as specialty grades that can exhibit active properties such as antimicrobial, oxygen scavenging and antioxidant performance (21). The Nanocor company is currently producing nanocomposites for use in plastic beer bottles that give the contents a 6-month shelf life (22). TetraPak and Eastman are developing nanocomposites of PET materials (23–26), and ICI is developing also nanocomposites of PET (27). Ube (Allied Signa Bayer) (28) and EMS Chemie is developing nanocomposites of PA-based systems (29).

Table 1. Summary of suppliers and of the barrier nanotechnology they are developing or offering at a commercial level

Company	Material	Application	Development status
NanoBioMatters S.L.	Nanocomposites/EVOH/PET/LDPE/PLA/PHB/PCL	Film	Commercial
NanoBioMatters S.L.	Active nanocomposites	Biocide, antioxidant Film	Commercial
Nanocor/Amcol Int.	Nanocomposites		Development
EMS Chemie	Nanocomposites/PA	Film	Commercial
Ube	Nanocomposites/PA	Film	Commercial
Allied Signal	Nanocomposites/PA		Development
Bayer	Nanocomposites/PA		Development
Honeywell	Nanocomposites/PA		Commercial
ICI/DuPont	Nanocomposites/PET	Film	Development
Eastman	Nanocomposites/PET	Bottles	Development
TetraPak	Nanocomposites/PET	Bottles	Laboratory
ICI	Nanocomposites/melamine	Bottles	Development
PPG Industries	Nanocomposites/epoxy	Bottles	Development

PA, polyaniline; PCL, polycapro lactone; PHB, polyhydroxybutyrate.

NANOCOMPOSITES RESEARCH DEVELOPMENTS TO ENHANCE BARRIER PROPERTIES

Several research studies published in the scientific literature detail barrier improvements for plastic-clay nanocomposites. Table 2 summarizes the most relevant works reporting barrier improvements in nanocomposites of plastics of interest in food-packaging applications.

PET is one of the most widely studied materials regarding nanocomposites, Sánchez-García et al. (30) reported improvements in oxygen permeability of about 55% in melt mixed nanocomposites of PET with 5 wt.-% nanoclay (based on a food contact approved montmorillonite (MMT) traded as NanoBioTer), with regard to the pure PET. Limonene permeability improvements of about 68% for composites containing 5 wt.-% of nanoclay and a water vapor permeability improvement of about 43% in nanocomposites containing 1 wt.-% of nanoclay were also reported. Ke et al. (31) reported a 25% oxygen permeability reduction for PET containing 1 wt.-% of organically modified montmorillonite [organical montmorillonite (OMT), containing an interlayer agent comprising a –COOH group in its structure] by using an in situ interlayer polymerization route. More recently, Choi, W.J et al. claimed to have obtained a 94% oxygen permeability reductions in PET containing 5 wt.-% of MMT (MMT-Na-with chlorotitanium triisopropoxide used as a catalyst) nanocomposites by an in situ polymerization process (32). Fifty percent oxygen permeability reduction for PET–MMT nanocomposites obtained by melt blending in a rheometer was also reported by Vidotti, et al. (33). Lai et al. (34) studied amorphous films of poly(ethylene terephthalate-co-ethylene naphthalate) (PETN) and PETN/Cloisite 30B (MMT-$(OH)_2$; MMT modified with methyl bis(2-hydroxyethyl) (hydrogenated tallowalkyl) ammonium cation)) nanocomposites prepared in a twin screw extruder. The PETN containing 2 wt.-% of the MMT-$(OH)_2$ clay showed a 50% reduction in O_2 permeability compared with the neat PETN. So, to enhance the polar interactions between the organoclay and the PETN matrix, the organoclay surface was treated with a diepoxide, diglycidyl ether of bisphenol A (DGEBA). Therefore, with the addition of epoxy (by melt intercalation and the weight ratio of epoxy to PETN was (0.75/100) in the finished composite), a permeability reduction higher than 88% was obtained with compared the neat PETN (34).

For the case of polyamides, Yano et al. (35) reported that the polyamides have a reduction of the water permeation coefficient of about 54% with only 2 wt.-% of an OMT (MMT-intercalated with an ammonium salt of dodecylamine) compared with the unfilled polymer. Picard et al. (36) measured that the diffusion rate slowed down by about 55% going from neat PA to polyamide 6 containing 13 wt.-% OMT (organically modified with a dihydroxy methyl tallow quaternary ammonium) nanocomposite prepared by melt mixing. Pinnavaia et al. (37) reported that the rate of water absorption in PA6 nanocomposites was lowered by 40% compared with the neat polymer.

Table 2. Relevant reported reductions (%) in oxygen and water vapor permeability of nanocomposites of some widely used polymers

Matrix	Type of clay	Clay content	O_2 Permeability	H_2O Permeability
PET (30)	MMT	5%	55%	
PET (30)	MMT	1%		43%
PET (31)	MMT	1%	25%	
PET (32)	MMT	5%	94%	
PET (33)	MMT	5%	50%	
PETN (34)	MMT	2%	50%	
PA (35)	MMT	2%		54%
PA (36)	MMT	13%		D 55%
[38]Nylon6	MMT	6%	28%	
[38]Copolyamide-Nylon6	MMT	6%	54%	
[40]LDPE	MMT	7%	24%	
[41]LLDPE	MMT	5%	15%	
[42]LDPE	MMT	5%	30%	
[43]EVOH	MMT	5%	75%	
[45]PP	$CaCO_3$	3%	30%	
[47]PP	MMT	4%	50%	
[48]PP	MMT	5%	57%	
[49]PS	MMT	7%	60%	
[51]PI	MMT	5%	69%	
[52]PI	MMT	0.5%	46%	48%
[53]PI	MMT	4%		82%
[54]Natural Rubber Latex	MMT	2%	66%	
[56]PVC	SiO_2	3%	40%	45%
[57]Resin Epoxy	Zirconium phosphate/phosphonate	5%	59%	
[58]PU	Natural Unmodified MMT	5%	41%	
[59]PU	MMT	3%	30%	50%
[60]PSF	MMT	3%	72%	30%

PA, polyaniline; pp, polypropylene.

Russo et al. (38) reported an oxygen barrier improvements for the PA6 (nylon 6) with 6 wt.-% of Cloisite 30B of about 28% compared with the pure PA6. They also study the copolyamides of PA6 containing 6 wt.-% of Cloisite 30B, and the oxygen permeability reduction was of about 54% compared with the pure copolyamide (38). Moreover, Jiang et al. (39) published that the barrier performance of exfoliated PA6 with an OMT (OMT was synthesized by a cation-exchange reaction between Na-montmorillonite and octadecylammonium salt) was improved markedly by adding a small amount of the clay, having a toluene and ethanol permeation rate in the composite sheet 3–4 times slower than in neat PA6.

Regarding polyethylene, Supong Arunvisut et al. published that a low-density polyethylene LDPE containing 7 wt.-% of OMT (MMT was mixed with Di(hydrogenated tallowalkyl) dimethyl ammonium chloride) exhibited a decreased oxygen permeability of 24% compared with the pure material (40). Ali Durmus et al. (41) measured a reduction in the oxygen permeability of ca. 15% with the addition of 5% OMT traded as Cloisite 20A [MMT modified with dimethyl dihydrogenated tallow quaternary ammonium salt, MMT(2Me$_2$HT)] to linear LDPE (LLDPE). Finally, Zhong et al. (42) reported that incorporating 5 wt.-% of the MMT(2Me$_2$HT) clay, the oxygen permeability of an LDPE maleic anhydride grafted polyethylene (MAPE) system prepared by melt mixing decreased by 30%.

Lagaron et al. (43) reported many significant results where nanotechnology was satisfactorily applied to improve packaged food quality and safety by increasing the barrier properties to oxygen of an ethylene-vinyl alcohol copolymer (EVOH) under dry and humid conditions using nanoclays (MMT and kaolinite). The authors measured a reduction in oxygen permeability of more than 75% in dry conditions and a reduction of 71% for the nanocomposites of EVOH at 85% RH.

Regarding poly(ethylene-co-vinyl acetate), Muralidharana et al. (44) reported the characterization of ethylene vinyl acetate (EVA)/MMT (natural sodium MMT clay) nanocomposite membranes with different clay loadings. The solvent uptake was minimum for composites with 3 wt.-% of the nanoclay and increased with increasing filler content, presumably because of aggregation of the clay filler at higher loading. They claimed a reduction in the diffusion coefficient of benzene, toluene and xylene of about 50%, 48%, and 40% for the nanocomposite with 3% clay, respectively.

In regard to propylene, Avella et al. (45) measured a reduction in barrier properties both to oxygen and to carbon dioxide of about 30% on nanocomposites of polypropylene containing 3 wt.-% of CaCO$_3$. Giuliana Gorrasi et al. (46) reported that samples of polypropylene containing 1 and 2 wt.-% of organomodified fluorohectorite showed a linear decrease in the diffusion coefficient until about the 3% of solvent sorbed dichloromethane vapor. Mittal et al. (47) prepared polypropylene nanocomposites containing different volume fractions of an OMT (MMT modified with an dialkyl imidazolium salt) and measured oxygen permeability reductions of about 50% for samples containing 4 wt.-% of the nanofiller (47). Finally, nanocomposites of polypropylene with 5 wt.-% of an OMT (a MMT modified with a nondisclosed alkyl ammonium salt) also showed a reduction in the oxygen permeability of about 57% and a reduction in the dioxide permeability of about 48%. The composites were prepared by a solvent blending method by Frounchi et al. (48).

In the case of polystyrene, Meneghetti et al. (49) synthesized polystyrene (PS)/clay nanocomposites via in situ polymerization with an OMT (the MMT was ion exchanged with zwitterionic surfactant (C18DMB)) that resulted in an intercalated morphology. The oxygen permeability decreased by more than 60% over pure PS for the intercalated nanocomposite containing a 0.07 volume fraction of clay.

Regarding polyimides, Yano et al. (50) claimed that only a 2 wt.-% addition of a synthetic mica led to a decrease in the gas permeability coefficient to a value less than one tenth that of the pure polyimide. Huang et al. (51) reported a decrease in the oxygen permeability of about 69% with a 5 wt.-% of OMT clays (MMT modified with alkylammonium ions) in a polyimide prepared by in situ polymerization. Yeh et al. (52) reported that a polyimide prepared by solvent casting containing an OMT (MMT modified with an alkyl ammonium salt) (0.5 wt.%) exhibited about a (53) 48% and 46% decrease in H$_2$O and O$_2$ permeability, respectively (52). Jin-Hae Chang et al. obtained an 82% reduction in the water permeability coefficient with the addition of 4 wt.-% of OMT (Na–MMT modified with an ammonium salt of hexadecylamine) in a polyimide (PI) nanocomposite film, as compared with the same PI film without nanoclay, both prepared by solution casting.

In the case of the natural rubber latex prepared by casting, the addition of 2 wt.-% of natural sodium MMT yielded a reduction in oxygen permeability of about 66% compared with the unfilled material (54). Liang et al. (55) discussed a reduction in nitrogen permeability of ca. 22% in an isobutylene–isoprene rubber (IIR) containing 5 wt.-% of OMT (MMT modified with butyl alcohol).

Concerning poly(vinyl-chloride) (PVC), Zhu et al. (56) reported the barrier properties to O$_2$ and H$_2$O of nanocomposites of PVC prepared by melt mixing as a function of nanofiller content. The PVC nanocomposites containing 3 wt.-% of SiO$_2$ led to an oxygen permeability reduction of about 40% and for the case of water of 45% compared with the same unfilled material.

In the case of epoxy resins, Tsai et al. (57) reported the preparation of novel nanocomposites of an epoxy resin containing zirconium phosphate/phosphonate derivative (Zr-P). The oxygen permeability decreased by about 59% and the nitrogen permeability decreased by about 53% for the nanocomposite containing 5 wt.-% of Zr-P compared with the unfilled material.

For polyurethanes, Choi et al. (58) claimed to have obtained a reduction in the oxygen permeability of about 41% for the PU containing 5 wt.-% of OMT (clay modified with hydroxyl end group) obtained by a film-casting method. Osman et al. (59) reported a reduction of the oxygen transmission rate of about 30% and a reduction in the water permeation of 50% for a polyurethane (PU) containing 3 vol.-% of OMT [the inorganic cations of the MMT were exchanged with the organic ammonium ion bis(2-hydroxyethyl) hydrogenated tallow ammonium].

Regarding polysulfones (PSF), Yeh et al. (60) developed and characterized PSF containing OMT (MMT modified with intercalating agent dodecylamine) nanocomposites, which were prepared via a solution dispersion method. Compared with the neat PSF, membranes of nanocomposite PSF materials containing low nanoclay loading (3 wt.-%) showed about 30% and 72% reductions in H_2O and O_2 permeability, respectively.

Even though many studies in the literature report about barrier enhancements in polymer and biopolymer matrices, it is clear from the modeling results (see Figure 1) that the expected improvements are not yet experimentally attained or reproducible. This is the result of lack of (a) complete exfoliation of the nanofiller, (b) good compatibility between the filler and matrix, and/or (c) good purification and appropriate selection of raw materials and surface modifications. In general, there is still a need for a deeper understanding of the composition-structure-processing-properties relationships in nanoclay-based nanobiocomposites both at a laboratory and at an industrial scale. Moreover, because most extensive studies related to nanoclays have been carried out using few nanoclay grades (based mostly on MMT), in many cases from the same commercial supplier, there is still a lot of room for variation and maturation in the nanoclay-based composites area.

Most applications of nanocomposites in plastics have made use of laminar clays and in some cases of carbon nanotubes. However, other types of reinforcing elements such as biodegradable fibers obtained by electrospinning are promising in several application fields (61, 62). The electrospinning method is a simple and versatile technology that can generate ultrafine fibers, typically in the range from 50 to 500 cm^3, of many materials. The produced fibers have large surface-to-mass ratios (up to 10^3 higher than a microfiber), excellent mechanical strength, flexibility, and lightness. The obtaining procedure is not mechanical but electrostatic and is applied to the polymer in solution or to polymer melts. As a result of the latter, it is a suitable technique for the generation of ultra-fine fibers of biodegradable materials, which are in general easy to dissolve. It has been reported that around 100 different polymers (including biopolymers) and polymer blends have been nanofabricated by electrospinning. Even though significant body of literature report about the characterization of nanofibers, not many studies exist that examine the properties of nanocomposites of materials containing these fibers. One of the most interesting aspects of the electrospinning methodology is the possibility of the incorporation of various substances, including fillers such as clays as well as bioactive agents in the electrospun fibers. This advantage has already been considered in the controlled release of bioactive principles in the pharmaceutical and biomedical fields (62) and can also be applied to the controlled release of active and bioactive food-packaging applications (3).

BIBLIOGRAPHY

1. A. Okada, M. Kawasumi, T. Kurauchi, and Kamigaito, “Synthesis of Nylon 6-clay Hybrid O. Polym Prepr,” *Am. Chem. Soc. Div. Polym. Chem.* **28**(2), 447 (1987).
2. R. Celis, G. Facenda, M.C. Hermosin, and J. Cornejo, “Assessing Factors Influencing the Release of Hexazinone from Clay-Based Formulations,” *Internati. J. Environ. Analyt. Chemi.* **85**(15), 1153–1164 (2005).
3. A. Lopez-Rubio, R. Gavara, and J.M. Lagaron, “Bioactive Packaging: Turning Foods into Healthier Foods through Biomaterials,” *Trends Food Sci. Technol.* **17**, 567–575 (2006).
4. J. M. Lagaron, in Proceedings of The Future of Nanoplastics, Intertech Pira Conference, San Antonio, TX, 2006.
5. A. A. Gusev, and H. R. Lusti, “Rational Design of Nanocomposites for Barrier Applications,” *Adva. Mate.* **13**(21), 1641–1643 (2001).
6. K. E. Strawhecker, and E. Manias, “Structure and Properties of Poly(vinyl alcohol)/Na+ Montmorillonite Nanocomposites,” *Chemi. Materi.* **12**, 2943 (2000).
7. I. Olabarrieta, M. Gallstedt, I. Ispizua, J. R. Sarasua, and M. S. Hedenqvist, *J. Agricult. Food Chem.* **54**(4), 1283–1288 (2006).
8. E. P. Giannelis, “Review: Polymer-Layered Silicate Nanocomposites: Synthesis, Properties and Applications,” *Appl. Organometal. Chem.* **12**, 675 (1998).
9. J. M. Lagaron, L. Cabedo, D. Cava, et al., “Improving Packaged Food Quality and Safety,” *Part 2: Nanocomposi. Food Additi. Contamin.* **22**(10), 994–998 (2005).
10. L. Cabedo, E. Giménez, J. M. Lagarón, R. Gavara, and J. J. Saura, “Development of EVOH-Kaolinite Nanocomposites,” *Polymer* **45**, 5233 (2004).
11. L. Cabedo, J. L. Feijoo, M. P. Villanueva, J. M. Lagaron, and E. Giménez, “Optimization of Biodegradable Nanocomposites Based. on aPLA/PCL Blends for Food Packaging Application,” *Macromolecu. Sympos.*, **233**, 191–197 (2006).
12. S. Sinha Ray, P. Maiti, M. Okamoto, K. Yamada, and K. Ueda, “New Polylactide/Layered Silicate Nanocomposites. 1. Preparation, Characterization, and Properties,” *Macromolecules* **35**, 3104 (2002).
13. H. Ishida, S. Campbell, and J. Blackwell, “General Approach to Nanocomposite Preparation,” *Chem. Mater.* **12**, 1260 (2000).
14. R. Krishnamoorti, R. A. Vaia, E. P. Giannelis, “Structure and Dynamics of Polymer-Layered Silicate Nanocomposite,” *Chem. Mater.* **8**, 1728 (1996).
15. R. A. Vaia, and E. P. Giannelis, “Polymer Melt Intercalation in Organically Modified Layered Silicates: Model Predictions and Experiment,” *Macromolecules* **30**(25), 8000 (1997).
16. H. R. Dennis, D. L. Hunter, D. Chang, S. Kim, J. L. White, J. W. Cho, and D. R. Paul, “Effect of Melt Processing Conditions on the Extent of Exfoliation in Organoclay-Based Nanocomposites,” *Polymer*, **42**, 9513 (2001).
17. J. Markarian, “Automotive and Packaging Offer Growth Opportunities for Nanocomposites,” *Plastics Additives & Compounding*, November/December, 2005.
18. J. Lange, and Y. Wyser, “Recent Innovations in Barrier Technologies for Plastic Packaging – a Review,” *Packag. Technol. Sci.* **16**, 149–158 (2003).
19. Y. Komori, and K. Kuroda, “Layered silicate-polymer intercalation compounds,” in T.J. Pinnavaia, G.W. Beall, eds. *Polymer-clay nanocomposites*, New York, John Wiley & Sons, pp. 3–18 (2001).
20. G. Strupinsky, A. Brody, “A Twenty-Year Retrospective on Plastics: Oxygen Barrier Packaging Materials, *TAPPI Polymers, Laminations* and Coatings Conference. Proceedings, San Francisco, CA, 1998; p. 119; *Anon. High barrier film. Packag. Innovation* **3**, 1 (1998); L.H. Carlblom, J. A. Seiner, *PCT Int. Appl. WO* 98/24839 (to PPG Industries Inc.) (1998).

21. N. Tricas, E. Nuñez, J. M. Lagaron, Nanopolymers 2008 a Rapra Conference, Frakfurt, Germany, October, 2008.
22. T. Lan, *Nanocomposite Materials for Packaging Applications*, Antec, 2007.
23. P. Frisk, J. Laurent, U.S. Patent 5 876 812 (to Tetra Laval Holdings), 1999.
24. A. Rosen, U.S. Patent 5 635 011 (to Tetra Laval Holdings), 1997.
25. J. C. Jr. Matayabas, Polymer Nanocomposites for High Barrier Performance PET Container Applications," *Proceedings of Nova-Pack Europe '99*, Neuss, Germany, 1999, p. 327.
26. J. C. Jr Matayabas, and S. R. Turner, "Nanocomposite Technology for Enhancing the Gas Barrier of Polyethylene Terephthalate," In T.J. Pinnavaia, G.W. Beall, eds., *Polymer-Clay Nanocomposites*. Wiley, Chichester, UK, 2000.
27. T. C. Gough, P. M. Jeffels, and A. G. Harrison, U.S. Patent 5 667 886 (to Imperial Chemical Industries plc), 1997.
28. P. Schwarz, and M. Mahlke, Polyamide Nanocomposites for Extrusion Coating Applications. *Proceedings of TAPPI 9th European PLACE Conference*, Rome, Italy, 2003.
29. J. Lange, Y. Wyser, "Recent Innovations in Barrier Technologies for Plastic Packaging—A Review," *Packag. Techno. Sci.* **16** (4), 149–158 (2003).
30. M. D. Sanchez-Garcia, E. Gimenez, and J. M. Lagaron, "Comparative Barrier Performance of Novel PET Nanocomposites With Biopolyester Nanocomposites of Interest in Packaging Food Applications," *J. Plastic Film Sheett.* **23**, 133–148 (2007).
31. Z. Ke, and B. Yongping, "Improve the Barrier Property of PET Film with Montmorillonite by in situ Interlayer Polymerization," *Materials Lett.*, **59**(27), 3348–3351 (2005).
32. W. J. Choi, H. -J. Kim, K. H. Yoon, O. H. Kwon, and C. I. Hwang, "Preparation and Barrier Property of Poly(ethylene terephthalate)/Clay Nanocomposite using Clay-supported Catalyst," *J. Appl. Polym. Sci.* **100**(6): 4875–4879 (2006).
33. S. E. Vidotti, A. C. Chinellato, L.F. Boesel, and L.A. Pessan, "Poly (ethylene terephthalate)-organoclay Nanocomposites: Morphological, Thermal and Barrier Properties," *J. Metastable Nanocrystall. Materi.*, **22**(1), 57–64 (2004).
34. M. Lai, and J. -K. Kim,"Effects of Epoxy Treatment of Organoclay on Structure, Thermo-Mechanical and Transport Properties of Poly(ethylene terephthalate-co-ethylene naphthalate)/Organoclay Nanocomposites," *Polymer* **46**, 4722–4734 (2005).
35. K. Yano, A. Usuki, A. Okada, T. Kurauchi, and O. Kamigaito, **"**Synthesis and Properties of Polymide-Clay Hybrid," *J. Polym. Sci., Part A: Gen. Pap.*, **31**, 2493 (1993).
36. E. Picard , J.-F. G′erard, and E. Espuche, "Water Transport Properties of Polyamide 6 Based Nanocomposites Prepared by Melt Blending: On the Importance of the Clay Dispersion State on the Water Transport Properties at High Water Activity," *J. Membrane Sci.* **313**, 284–295 (2008).
37. T. J. Pinnavaia, and G. W. Beall, "Polymer-Clay Nanocomposites," John Wiley & Sons Ltd, Chichester, UK, 2000.
38. M. Russo, G. P. Simon, and L. Incarnato, "Correlation Between Rheological, Mechanical, and Barrier Properties in New Copolyamide-Based Nanocomposite Films," *G. Macromolecules* **39**, 3855–3864 (2006).
39. T. Jiang, Y. -H. Wang, J. -T. Yeh, Z. -Q. Fan, "Study on Solvent Permeation Resistance Properties of Nylon6/clay Nanocomposite," *Euro. Polym. J.* **41**, 459–466 (2005).
40. S. Arunvisut, S. Phummanee, A. Somwangthanaroj, "Effect of Clay on Mechanical and Gas Barrier Properties of Blown Film LDPE/Clay Nanocomposites," *J. Appli. Polym. Sci.*, **106**, 2210–2217 (2007).
41. A. Durmus, M. Woo, A. Kas_góz, C. W. Macosko, M. Tsapatsis, "Intercalated Linear Low Density Polyethylene (LLDPE)/clay Nanocomposites Prepared with Oxidized Polyethylene as a New Type Compatibilizer: Structural, Mechanical and Barrier Properties," *Euro. Polym. J.* **43**, 3737–3749 (2007).
42. Y. Zhong, D. Janes, Y. Zheng, M. Hetzer, D. D. Kee, "Mechanical and Oxygen Barrier Properties of Organoclay-Polyethylene Nanocomposite Films," *Polym. Engineer Sci.* **47**(7), 1101-1107 (2007).
43. J. M. Lagarón, L. Cabedo, D. Cava, J. L. Feijoo, R. Gavara, and E. Gimenez, "Improving Packaged Food Quality and Safety Part 2: Nanocomposites," *Food Addit. Contamin.* **22**(10), 994–998 (2005).
44. M. N. Muralidharana, S. Anil Kumarb, and S. Thomas, "Morphology and Transport Characteristics of Poly(ethylene-co-vinyl acetate)/Clay Nanocomposites," *J. Membr. Sci.* **315**, 147–154 (2008).
45. M. Avella, G. Bruno, M. E. Errico, G. Gentile, N. Piciocchi, A. Sorrentino, and M. G. Volpe, "Innovative Packaging for Minimally Processed Fruits," *Packag. Technol. Sci.* **20**, 325–335 (2007).
46. G. Gorrasi, M. Tortora, V. Vittoria, D. Kaempfer, and R Múlhaupt, "Transport Properties of Organic Vapors in Nanocomposites of Organophilic Layered Silicate and Syndiotactic Polypropylene," *Polymer* **44**, 3679–3685 (2003).
47. V. Mittal, "Gas Permeation and Mechanical Properties of Polypropylene Nanocomposites with Thermally Stable Imidazolium Modified Clay," *Euro. Polymer J.* 43 (2007).
48. M. Frounchi, S. Dadbin, Z. Salehpour, and M. Noferesti, "Gas Barrier Properties of PP/EPDM Blend Nanocomposites," *J. Membr. Sci.* **282**, 142–148 (2006).
49. P. Meneghetti, S. Qutubuddin, "Synthesis, Thermal Properties and Applications of Polymer-Clay Nanocomposites," *Thermochim. Acta* **442**, 74–77 (2006).
50. K. Yano, A. Usuki, A. Okada, "Synthesis and Properties of Polyimide-Clay Hybrid Films," *J. Polym. Sci. Part A: Polym. Chem.* **35**(11), 2289–2294 (1997).
51. C.-C. Huang, G.-W. Jang, K.-C. Chang, W.-I. Hung, and J.-M. Yeh, "High-Performance Polyimide–Clay Nanocomposite Materials Based on a Dual Intercalating Agent System. *Polym. Int.* **57**, 605–611 (2008).
52. J.-M. Yeh, C.-F. Hsieh, J.-H. Jaw, T.-H. Kuo, H.-Y. Huang, C.-L. Lin, and M.-Y. Hsu, "Organo-Soluble Polyimde (ODA–BSAA)/Montmorillonite Nanocomposite Materials Prepared by Solution Dispersion Technique," *J. Appl. Polym. Sci.* **95**, 1082–1090 (2005).
53. J.-H. Chang, D.-K. Park, and K. J. Ihn, "Polyimide Nanocomposite with a Hexadecylamine Clay: Synthesis and Characterization," *J. Appli. Polym. Sci.* **84**, 2294–2301 (2002).
54. A. Jacob, P. Kurian, and A. S. Aprem, "Transport Properties of Natural Rubber Latex Layered Clay Nanocomposites," *J. Appli. Polym. Sci.* **108**, 2623–2629 (2008).
55. Y. Liang, W. Cao, Z. Li, Y. Wang, Y. Wu, and L. Zhang, "A New Strategy to Improve the Gas Barrier Property of Isobutylene–Isoprene Rubber/Clay Nanocomposites," *Polym. Test.* **27**, 270–276 (2008).
56. A. Zhu, A. Cai, J. Zhang, H. Jia, and J. Wang, "PMMA-grafted-Silica/PVC Nanocomposites: Mechanical Performance and Barrier Properties," *J. Appli. Polym. Sci.* **108**, 2189–2196 (2008).

57. T.-Y. Tsai, Y.-J. Wu, and F.-J. Hsu,“Synthesis and Properties of Epoxy/Layered Zirconium Phosphonate (Zr-P) Nanocomposites,” *J. Phys. Chemi. Solids* **69**, 1379–1382 (2008).

58. W. J. Choi, S. H. Kim, Y. J. Kim, and S. C. Kim, “Synthesis of Chain-Extended Organifier and Properties of Polyurethane/Clay Nanocomposites,” *Polymer*, **45**, 6045–6057 (2004).

59. M. A. Osman, V. Mittal, M. Morbidelli, and U. W. Suter,“Polyurethane Adhesive Nanocomposites as Gas Permeation Barrier,” *Macromolecules*, **36**, 9851–985 (2003).

60. J.-M. Yeh, C.-L. Chen, Y.-C. Chen, C.-Y. Ma, H.-Y. Huang, and Y.-H. Yu, “Enhanced Corrosion Prevention Effect of Polysulfone–Clay Nanocomposite Materials Prepared by Solution Dispersion,” *J. Appli. Polym. Sci.* **92**, 631–637 (2004).

61. I. S. Chronakis, “Novel Nanocomposites and Nanoceramics Based on Polymer Nanofibers Using Electrospinning Process—A Review,” *J. Mater. Process. Technol.* **167**(2–3), 283–293 (2005).

62. Z. M. Huang, Y.Z. Zhang, M. Kotaki, et al., “A Review on Polymer Nanofibers by Electrospinning and Their Applications in Nanocomposites,” *Composit. Sci. Technol.* **63**(15), 2223–2253 (2003).

NANOTECHNOLOGY AND PACKAGING

SUSAN SELKE
Michigan State University
School of Packaging, East
Lansing, Michigan

WHAT IS NANOTECHNOLOGY

In recent years, a lot of public attention has been given to nanotechnology, with both claims and fears making headlines. What may easily be obscured in all the hype is just what nanotechnology is and isn’t. The simplest definition of nanotechnology is that it is technology involving structures with one or more dimensions that lie between 1 and 100 nanometers (1 nm = 0.000000001 m). It has been discovered that at these very small sizes, particles of “ordinary” materials can have properties that are significantly different from those the material has when its particles are larger. Among these properties can be differences in reactivity, color, the ability to move through barriers, and so on. The underlying reason for the change in properties is that atomic properties such as quantum effects and wave-particle duality that do not have observable effects at larger scales do have profound impacts on behavior at these tiny sizes. Furthermore, nanoscale materials have much larger surface areas than similar amounts of larger particles, so their potential for interaction with surrounding materials is much greater.

Some effects associated with nanoscale structures have been known for a very long time. Medieval stained glass windows and ancient pottery get some of their colors from nanopigments. Gold particles, for example, can impart an orange color, a red color, or even a greenish color, depending simply on the size of the particles incorporated. Other materials that we use have always had “particles” in this size range, so they behave as we’ve expected them to. For example, antioxidants in plastic films, sugar in water solution, and plasticizers in PVC blisters have components that are nanoscale in size. The key difference in the “nanotechnology” that is getting all the attention is related to materials that we normally use at large scale, but that have different properties when their particle size is reduced.

Perhaps in part because of this, some definitions of nanotechnology have tried to require more than just size. A common approach has been to require that to be “true” nanotechnology, the materials have novel properties and functions because of their small size, and/or that they involve the ability to control or manipulate materials on an atomic scale. Of course, one of the problems with such a definition is the vagueness of “novel.” Does something cease being nanotechnology once we become accustomed to it? Even controlling or manipulating materials on an atomic scale isn’t really new. All chemical reactions involve such phenomena to some extent.

To further complicate the issue of definitions, not all products that use nanotechnology explicitly state that they do so, and some products claim to use nanotechnology when they really do not. Furthermore, some products use nanotechnology in manufacturing, but there are no nanoscale structures in the finished product. So, it is understandable that there remains a degree of vagueness about what is and is not nanotechnology, in packaging as well as in other fields.

The official U.S. definition of nanotechnology comes from the National Nanotechnology Initiative: “Nanotechnology is the understanding and control of matter at dimensions between approximately 1 and 100 nanometers, where unique phenomena enable novel applications. Encompassing nanoscale science, engineering, and technology, nanotechnology involves imaging, measuring, modeling, and manipulating matter at this length scale.” This definition importantly recognizes that 100 nm is not a firm size line between “nano” and “not-nano.” Also, it is recognized that nanoscale materials and effects are not limited to synthetic substances, but are also found in nature. For example, spider silk is naturally reinforced by nanoscale crystals (1).

NANOTECHNOLOGY IN PACKAGING

Nanotechnology has applications in a vast array of fields. Our discussion here will be limited to those applications that are relevant to packages or packaging materials. By all accounts, this is a significant sector of packaging, and it is predicted to grow rapidly. A 2005 study by Helmut Kaiser Consultancy (2) reported that there was $860 million in U.S. sales of nano-related food and beverage packaging in 2004, with more than 250 nano-packaging products in the market. Furthermore, the study predicted that nanotechnology would affect 25% of the food packaging business over the next decade, reaching a value of $20.4 billion by 2010. Much of this is expected to be for the food products themselves. Packaging applications mentioned included improvement in material performance and extension of product shelf life, along with special features such as antimicrobial action, tailored permeabilities, and embedded sensors. A 2007 update reported that the 2005 "nano-featured food packaging" market had a value of $1.1 billion and was anticipated to reach $3.7 billion in 2010. Furthermore, the prediction was that the "nano-bio-info convergence" would influence over 40% of the food industry by 2015 (3).

Similarly, a 2004 report from Pira (4) reported that benefits of nanotechnology in packaging included (a) longer shelf life, (b) improved high-temperature performance permitting hot fill, (c) thinner flexible packaging films, (d) functionality of various types, including anticounterfeit, antitamper, and antimicrobial, (e) various types of sensors, and (f) integrated power for features such as self-healing containers and intelligent tags. The study also mentioned nano barcodes for track and trace and sensing, use of nanotechnology in the production process for paper, nanoscale pigments for inks, the use of nanomaterials to obtain colors without requiring dyes or conventional pigments, and electronic displays based on nanomaterials that provide the quality of paper.

While some of these early studies likely overplayed the impact and usefulness of nanotechnology in packaging, there are significant applications where nanotechnology provides real advantages. In this article, we will group these current and potential applications into three main categories: barrier, improved mechanical performance, and communication/sensing, with a fourth category of miscellaneous for applications that do not readily fit within these three. Please note that the discussion that follows is meant to be illustrative, rather than inclusive, because the number of applications of nanotechnology in packaging greatly exceeds the space available for discussion, and new uses, materials, and systems arise constantly.

Barrier

Use of nanomaterials to improve the barrier of packaging materials, generally plastics, was one of the earliest applications to be tagged with the "nano" identifier. It is also one of the areas where definitions are fuzzy. Metallized film, for example, is not generally labeled as "nano" yet the aluminum thickness is generally 40–50 nm, so it certainly could be so categorized. The primary function of the aluminum layer is to improve barrier, often especially to oxygen.

Similarly, SiO_x coatings, such as on film or on PET bottles, generally have a thickness of 40–60 nm. This glass-like coating, usually inside but sometimes outside the bottle, also acts to improve barrier. Aluminum oxide coatings are also used to improve barrier, and they are applied at nanoscale thickness. Usually, these coatings are not marketed as nanotechnology.

In contrast, the amorphous carbon systems, also used as coatings to improve barrier, have been marketed as nanotechnology in some cases. Sidel's Actis™ system applies a layer of 20–200 nm of amorphous carbon to the inside of PET bottles, Actis Lite™ provides a thinner layer. Kirin and Mitsubishi Shoji Plastics implicitly claim nanotechnology for their "Plasma Nano Shield" system, which provides a 20 to 40-nm-thick layer of amorphous carbon. This system was previously called "Diamond-Like-Coating" (5).

Most often, nanotechnology for barrier improvement is associated with the development of nanoclay composite structures. These are based on various types of layered clays, most commonly montmorillonite. When properly formulated and processed, the clay is exfoliated, splitting into platelets that are typically about 1 nm thick and 70–2000 nm in length and width. The clay particles are not mobile in the polymer, and they present a torturous path for the diffusion of gases, which cannot pass through the clay platelets. It is reported that 10% clay can cut permeation rates by as much as 75% (6, 7).

There are two major U.S. nanoclay suppliers. One is Nanocor (8), which produces the Nanomer brand for use with nylon resins, polyolefins, and other products. The other is Southern Clay Products (9), which markets under the Cloisite brand.

Mitsubishi Gas Chemical markets Imperm N™ PET bottles, films, and thermoformed containers that contain Nanocor nanoclay. The barrier layer is M9™, which is a nanocomposite with clay platelets in MXD6 nylon (10–12).

Similarly, Honeywell markets Aegis resins for multilayer PET bottles. These resins, available with and without oxygen scavenger, are also based on nanoclay from Nanocor. The clay particles are said to conduct the oxygen molecules to specific oxygen-capture sites in the nanocomposite (11–13).

Southern Clay Products' Cloisite nanoclay has been used to enhance the barrier of ethylene vinyl alcohol (EVOH) for long-shelf-life packaging, in a joint development effort by the U.S. military, NASA, and Triton Systems, Inc. (11, 12).

Alcoa filed for a patent on coextruded barrier liners for plastic bottle caps that contain a nylon 6/nanoclay composite, along with oxygen scavengers, to protect oxygen-sensitive products such as beer or juice. The liners are reported to be better than other barrier materials at very high humidities (11).

Other nanominerals can also be used to improve barrier or other performance properties. In 2006, Nanova, LLC was listed as a supplier of nanotalc and nanocalc, which consisted of magnesium silicate and calcium carbonate, respectively (14). However, as of late 2008 the company was evidently no longer in business.

The type of nanomaterial used to improve barrier is not always identified. Kuraray (Japan) markets a retort food packaging film, Kurarister™, which is reported to contain a 1-micron-thick barrier layer on both sides of a PET film. The barrier layer is a composite containing inorganic nanoparticles. The result is a highly transparent film that can be printed without surface treatment. The coating is reported to be highly durable, maintaining barrier properties even if stretched or flexed during processing. The barrier is also not much affected by moisture. A nylon-based film, Kurarister™ N, is also available and offers improved retention of mechanical properties after retorting, compared to conventional nylons. The materials are being marketed as an alternative to foil laminates in pouches for retorted foods, as well as for medical packaging and lidding film. Their microwaveability and the ability to use metal detectors on the packaging line are mentioned as two significant advantages (15).

Combustion chemical vapor deposition (CCVD) is used to produce 30 to 60-nm-thick barrier coatings on PET bottles in the nGimat system (formerly MicroCoating Technologies). The company also produces nanopowders and devices. The company's catalog in late 2008 listed 7 single-oxide nanopowders, 15 bi-metal oxides, 9 multimetal oxides, 2 phosphates, 2 hydroxyapatites, and 7 metal and metal-alloy nanopowders, along with the potential for special orders for others not listed. Barrier coatings for packaging are targeted at improving carbon dioxide and oxygen barrier in PET containers and PET/polyolefin films. The coatings are applied using nGimat's proprietary Nanomiser™ device. The resultant barrier layers are 30–60 nm in thickness and are transparent. Barrier performance is reported to be comparable to metalized film. The company claims that the shelf life of 20 oz PET bottles for carbonated beverages can be extended from the 10 weeks common for uncoated bottles to 30 weeks (16).

Researchers have even hypothesized the use of nanotechnology to control the permeability of a packaging system by using a molecular "switch" such as a change in pH to open or close pores in a nanoporous film layer (17).

Improved Mechanical Performance

Addition of nanoclay also increases the stiffness and strength of polymer materials. While most applications specifically targeting improved mechanical performance are in products, rather than packages, PolyOne was reported in 2004 to be nearing commercialization of their nanoclay-reinforced PP, Maxxam LST™, in pallets and dunnage (9). The 2008 information from the company indicates that two grades of nanoclay-reinforced PP, now called Nanoblend™ LST, are currently available (18).

Addition of nanoscale nucleating agents in foams results in smaller cell size and higher cell density, along with improving the performance of the foam (11). Researchers have also investigated the use of nanotechnology to produce foams that can be tuned to protect the contents from specific frequencies (17).

Nanoscale silica and alumina particles have been found to increase the scratch and abrasion resistance of coatings, while not interfering with transparency (17).

Conductive polymers can be made by using carbon nanotubes as a reinforcing filler. The carbon nanotubes also offer significantly improved tensile strength and greater thermal conductivity. Other carbon-based nanomaterials can provide similar improvement. Pyrograf Products produces vapor-grown carbon nanofibers that are reported to cost significantly less than carbon nanotubes, while providing similar benefits (11). Fiber diameters are 70–200 nm, and lengths are 50–100 microns. The company does not currently list packaging applications as typical uses, but they do have potential (19). Potentially even less expensive but with similar performance are graphite nanoplatelets (11).

Addition of nanoscale inorganic alumina platelets to plastics is reported to provide sizeable improvements in rigidity, strength, and thermal stability. Some researchers are currently working on development of synthetic alumina platelets. Others are developing large organic molecules in the form of rigid disks, with the idea that the chemical properties can be adjusted by attaching functional groups to the uniformly shaped disks (20).

Communication/Sensing

The communication category includes RFID tags incorporated into or onto packaging materials. While the tags themselves are not nano-sized, nanotechnology is used in manufacture of the embedded computer chips, and RFID tags have been the target of groups outraged at what they see as potential invasion of privacy (21). The potential advantages of RFID for inventory control, track-and-trace functionality, and so on, have led to a steady increase in its use.

Other communication functions related to nanotechnology include embedded sensors, to detect and/or record changes in temperature, pressure, concentrations of chemical substances, shocks, vibration, and so on (17, 22). One example is "nano ink" for detection of oxygen as an indication of faulty packaging or product tampering. The ink contains light-sensitive nanoparticles that are "switched on" with ultraviolet light. The UV light changes the ink color to white, but it changes back to blue under normal room light if oxygen is present. The dye is encapsulated in polymer, allowing it to be coated only on surfaces. Coupled with MAP packaging, it will change color if oxygen is present in the package but remain colorless if oxygen remains absent (23).

Strathclyde University has developed a film, based on nanocrystalline semiconductor technology, that changes color with oxidation of food inside the package. The color and sensitivity can be changed, and the sensor is printable on paper, plastic, or metal (12).

Some sensors are designed to detect substances other than oxygen, such as ethylene, which is associated with ripeness in many fruits. Sensors for fresh pears are already marketed (24). Dublin University is developing printable oxygen and carbon dioxide sensors. Sensors can also be targeted at detection of microbial contamination or toxins, resulting either from contamination or spoilage or from terrorism. While not all of these sensors involve nanotechnology, many do (22).

Detection of counterfeiting is the target of another nanomarking system. IDGlobal has a forensic marking technology in which packaging materials, including inks, adhesives, and varnish coating, are tagged with nanomolecular markers. Hand-held scanners then use spectrometry to read the chemical signatures imparted by the nanomarkers. The information from the bar codes or RFID tags is matched to the product signature in the marker. Any disagreement may mean counterfeiting. Furthermore, the markers cannot be detected visually, and the cost per label is less than one cent (25).

Similarly, Microtrace produces taggants that act as "fingerprints" for product identification and authentication.

While the particles themselves are larger than nano, at 20 microns or larger, the structures within the particles are often nanoscale. In fact, each encoded particle may contain multiple nanotaggant technologies. Packaging applications of the taggants include holographic and laminate films and shrink sleeves, among others (26).

5In 2001, researchers at Pennsylvania State University reported the development of a method to form nano-sized rods that could be used to produce nanoscale bar codes, which could have use as covert anticounterfeit measures (17).

Another potential packaging application of nanotechnology is in printed electronics, which might be used, for example, to provide displays on packages themselves (17, 27). In 2006, Pliant and NovaCentrix announced an alliance to develop "unique film and packaging solutions" by combining Pliant's film expertise with NovaCentrix's expertise in nanoparticle based inks and coatings (27). While no recent reference to this alliance was found, NovaCentrix continues to develop printed electronics with potential applications to advanced packaging systems (28).

Similarly, Siemens in 2005 developed color displays that can be printed on paper or foil, suggesting that the displays could be printed on packages to show information about products or to show operating instructions. They were even working on the ability to show moving pictures, suggesting that it would be possible even to have small computer games printed on packages, powered by printable batteries (29). It was anticipated that the first displays would become available in 2007, but no current reference to them was found. However, the potential remains.

Other

Nanoclays are also being used to act as flame retardants in plastic materials. The nanoclay acts to form a char coating that delays the polymer degradation and reduces the heat output. It also increases the heat-distortion temperature (11, 12).

Nanomaterials can also be used to provide antimicrobial properties, for either packages or products. One common system uses silver, either incorporated into zeolites or, in the case of nGimat, deposited as a layer of "adherent silver nanodots" which have antimicrobial activity against fungi and bacteria in the presence of moisture (30). Other systems use tethered bioactive compounds on surfaces, such as peptides linked to amines that in turn were attached to polyethylene (31). While these are not usually tagged with the "nano" label, they are nanoscale in size.

Organic/inorganic nanocomposite coatings were developed as part of the EU Solplas project, which began in 2002, for antimicrobial activity as well as for barrier improvement. This process uses aerosol-assisted atmospheric plasma (AAAP) coating, in which the film precursor is introduced into a plasma adjacent to the substrate as aerosol droplets. In the nano-alternative, an electrospray process is used to decrease the size of the aerosol droplets to the nanoscale, making the process more effective (31).

Nanopigments can be used to provide colors for packaging materials without the use of conventional dyes or pigments. The color is created by dispersion of uniformly sized nanoparticles. Such nanopigments can also be used in inks. A different type of nanomaterial, hyperbranched polymers, can also be used to allow the same ink formulation to be used to print on both polar and nonpolar surfaces. BASF reportedly estimated that 10% of its ink sales already involve nanotechnology (32).

Nanoscale additives have found use in papermaking. Colloidal silica sols and cationic polymers have been used in papermaking for many years, without being labeled as "nano," to aid in fiber retention and drainage systems. Newer technologies use highly structured nanoparticles for this purpose. Inorganic/organic hybrid materials, mineral-based coatings, and polymer-encapsulated nanoclay hybrids have all been used as paper coatings (32).

One company is now marketing a nano-dispersed biopolymer that is intended to be a substitute for wax emulsions for manufacturing water-resistant paper and paperboard. TopChim claims its technology maintains the water barrier of wax emulsions while improving repulpability and recyclability. The biopolymer contains a "monodisperse distribution of nanoparticles with a regular shape" (33).

Similarly, the SustainPack project in the EU has a goal of reducing the environmental impact of packaging materials. One target is to increase the strength, including wet strength, of fiber-based packaging materials through the use of nanotechnology. Researchers are using nanoclays modified with chitosan derived from crustacean shells (34).

Greenbox Systems claims nanotechnology is the basis of their Thermal-Lok™ panels that provide "unparalleled resistance to heat transfer" and permit the Greenbox containers, with appropriate phase-change materials, to provide temperature stability for extended periods for sensitive products such as pharmaceuticals, blood, and biologics. Details of the technology are proprietary, other than it uses a carbon-silica material in a nanotechnology-based process that results in an insulating capacity ten times greater than typical foams (35).

Hybrid organic–inorganic nanocomposites based on titania siloxane have been developed for glass bottles in both Japan and Europe. The coatings provide a wide variety of colors while improving the mechanical properties of the bottles. Furthermore, the bottles can be easily recycled as uncolored glass (12).

Nanotechnology can also be used to release desired substances. In 2003, researchers in the Netherlands were working on use of nanotechnology to develop intelligent packaging in which a bioswitch would send a command to the package to release a preservative if the food within began to spoil (17).

Researchers at the University of Leeds have worked on incorporation of oils and oil-soluble sensors for fragrance release, color change, and anticounterfeiting applications. NaturalNano reported in March 2008 that the company won an award for innovation from a Fortune 500 company for its work in extended release capability. The desired components are loaded into nanotubes, which release the material slowly over time (36). While it appears that the current target is consumer products, applications to packaging are obvious.

Nanotechnology can also play a role in something as simple as starch-based adhesives. In 2004, EcoSynthetix Inc. developed a nanostarch powder adhesive that has advantages over conventional starch adhesives used for manufacture of corrugated board. The 50 to 100-nm starch particles in the EcoSphere adhesive could be used at lower water content than conventional starch adhesives, meaning that less energy and shorter times were needed for drying, allowing ovens to run at lower temperatures (37). Evidently the higher cost proved prohibitive, at least for now, since the company no longer lists this adhesive as a product. However, they do market a binder coating for paper and paperboard, EcoSphere™ 2202, that reportedly consists of crosslinked biopolymer nanoparticles. The company also manufactures a variety of pressure-sensitive adhesives; it is not clear whether these also involve nanotechnology (38).

On a more high-tech level, researchers at the Polymer Centre at Sheffield University have used nanotechnology to develop an adhesive that can be turned on and off, which they termed “molecular velcro” (17).

Regulations and Public Concern

Regulations for nanotechnology are still developing. Regulatory systems in place for “ordinary” materials are not always appropriate for nanoscale versions of those materials. For example, for materials that are categorized as GRAS (generally recognized as safe), the differences in behavior that appear when size is reduced to the nanoscale may result in differences in toxicity. On the other hand, if the migration or other safety testing was done with materials already dispersed at the nanoscale, simply applying the “nano” tag to the product or system obviously does not change its properties.

An additional concern is that we are still early in learning how nanoscale materials behave. We do not yet have a full understanding of how variations in particle size within the nanoscale, the presence of contaminants, dispersal into the environment after use, and so on, affect the behavior of the materials. In 2008, the Woodrow Wilson International Center for Scholars Project on Emerging Nanotechnologies, in collaboration with the GMA, published an analysis of key regulatory issues for use of nanomaterials in food packaging (39).

BIBLIOGRAPHY

1. National Nanotechnology Initiative, web information. Available at http://www.nano.gov/html/facts/whatIsNano.html. Accessed December 30, 2008.
2. Food Production Daily, May 27, 2005. Available at http://www.foodproductiondaily.com/Supply-Chain/Nanotechnology-sales-increase-to-687.5m-in-2004. Accessed Dec. 22, 2008.
3. Helmut Kaiser Consultancy, web information. Available at http://www.hkc22.com/Nanofoodconference.html. Accessed December 23, 2008.
4. Pira, March 1, 2004. Available at http://www.intertechpira.com/publicationsearch.asp?step=3&ecommproductid=3-B04E8611D12E39E7D5811D12E39E7D5811-D12E|25584A|13871C&. Accessed December 22, 2008.
5. V. Komolprasert in Y. H. Hui, ed., *Food Science, Technology, and Engineering*, CRC Press, Boca Raton, FL, Vol. 3, pp. 130–138.
6. R. Leaversuch, *Plastics Technology*. Available at http://www.ptonline.com/articles/200110fa3.html. Accessed December 22, 2008.
7. Y. Liang, J. Qian, J. W. Cho, V. Psihogios, and T. Lan, Nanocor Technical Papers, 2002. Available at http://www.nanocor.com/tech_papers/Additives2002.asp. Accessed December 22, 2008.
8. Nanocor, web information. Available at http://www.nanocor.com/. Accessed December 22, 2008.
9. Southern Clay Products, web information. Available at http://www.scprod.com/.
10. Nanocor, NovaPack 2003. Available at http://www.nanocor.com/tech_papers/NOVAPACK03.pdf. Accessed December 22, 2008.
11. L. Sherman, *Plastics Technol*. **50**(11), 56–61 (2004).
12. C. Sanchez, B. Julian, P. Belleville, and M. Popall, *J. Mater. Chem*. **15**, 3559–3592 (2005).
13. Honeywell, web information. Available at http://www51.honeywell.com/sm/aegis/. Accessed December 22, 2008.
14. AZ Nanotechnology, web information. Available at http://www.azonano.com/Suppliers.asp?SupplierID=448. Accessed December 22, 2008.
15. Kurarister$^{\mathrm{Tm}}$, web information. Available at http://www.kurarister.com/upl/1/default/doc/kurarister_techBroch_070201.pdf. Accessed December 22, 2008.
16. nGimat, web information. Available at http://www.ngimat.com/barrier/barriercoatings.html. Accessed December 22, 2008.
17. Faraday Packaging Partnership, The Packaging Innovation & Technology Bulletin Alert, 2003. Available at http://www.polymercentre.org.uk/news/pdfs05/pub-2005-02.pdf. Accessed December 29, 2008.
18. PolyOne, web information. Available at http://www.polyone.com/en-us/Pages/default.aspx. Accessed December 22, 2008.
19. Pyrograf Products Inc., web information. Available at http://www.apsci.com/ppi-about.html. Accessed December 22, 2008.
20. A. ElAmin, Food Production Daily, July 9, 2007, Available at http://www.foodproductiondaily.com/content/view/print/61899. Accessed December 23, 2008.
21. S. Selke and N. Nordin, in A. Mohanty, M. Misra and H. S. Nalwa, eds., *Packaging Nanotechnology*, Chapter 14, American Scientific Publishers, Valencia, CA, 2009.
22. AZ nanotechnology, web information, http://www.azonano.com/Details.asp?ArticleID=1317. Accessed December 29, 2008.
23. A. ElAmin, Foodqualitynews.com, November 14, 2006. Available at http://www.foodqualitynews.com/content/view/print/22032. Accessed December 23, 2008.
24. RipeSense, web information, http://www.ripesense.com/. Accessed December 29, 2008.
25. D. Vaczek, Tracking & Tracing Pharmaceutical Products, Fall 2008, p. 26.
26. Microtrace, web information. Available at http://www.microtracesolutions.com/. Accessed December 29, 1008.
27. Nanotechwire.com, September 26, 2006. Available at http://www.nanotechwire.com/news.asp?nid=3794&ntid=&pg=1. Accessed December 29, 2008.
28. NovaCentrix, web information. Available at http://www.novacentrix.com/. Accessed December 30, 2008.

29. Nanotechwire.com. October 8, 2005. Available at http://www.nanotechwire.com/news.asp?nid=2409&ntid=&pg=1. Accessed Dec. 29, 2008.
30. nGimat, web information. Available at http://www.ngimat.com/barrier/anti_microb.html. Accessed December 22, 2008.
31. R. Lowry, Pira, Profit Through Innovation, web information. Available at http://profitthroughinnovation.com/packaging/antimicrobial-packaging.html. Accessed December 29, 2008.
32. R. Lowry, Pira, Profit Through Innovation, web information. Available at http://profitthroughinnovation.com/company-profiles/nano-materials-and-paper.html. Accessed December 29, 2008.
33. TopChim, web information. Available at http://www.topchim.com/?biopolymer. Accessed December 29, 2008.
34. A. ElAmin, Meatprocess.com, May 2, 2007. Available at http://www.meatprocess.com/Financial/EU-funds-nano-packaging-research. Accessed December 23, 2008.
35. Greenbox Systems, web information. Available at http://www.greenboxsystems.com/index.htm. Accessed Dec. 29, 2008.
36. Nanotechnology Now, March 18, 2008. Available at http://www.nanotech-now.com/news.cgi?story_id=28562. Accessed December 29, 2008.
37. Small Times, June 14, 2004. Available at http://www.smalltimes.com/articles/stm_print_screen.cfm?ARTICLE_ID=269497. Accessed December 29, 2008.
38. EcoSynthetix, web information. Available at http://www.ecosynthetix.com/. Accessed December 30, 2008.
39. M. Taylor, *Assuring the Safety of Nanomaterials in Food Packaging: The Regulatory Process and Key* Issues, Woodrow Wilson International Center for Scholars, Washington, DC, 2008.

NETTING, PLASTIC

JIM OHLINGER
Tipper Tie-Net, West Chicago,
Illinois

INTRODUCTION

Today there are two popular manufacturing methods to produce plastic netting: knitting and extrusion. Both methods produce a tubular or sheeted netting product in a wide variety of mesh sizes, diameters, widths, and colors. Plastic netting is purchased as individual pieces, in continuous rope form, or sheared onto cardboard mandrels.

The primary materials used to produce plastic netting are high-density polyethylene (HDPE) and polypropylene. Ultraviolet inhibitors can be added to the resin to give the netting extra durability in direct sunlight applications. HDPE has a high elongation value and must undergo the process of orientation to achieve its maximum tensile strength. The process of orientation is when the material is heated and then stretched to the point just before breakage. This process also keeps the netting from drooping when exposed to heat applications. The melt index of HDPE is 208°F. Polypropylene has a high melt index (325°F), and it is used when temperature requirements exceed 208°F. Polypropylene tensile strength is almost twice that of HDPE with the equivalent weight ratio. With the heat and strength attributes, polypropylene netting is widely used in the meat–poultry industry.

The process of extruding plastic netting was invented in the mid-1950s. Extruded netting is produced through counterrotating dies. As the inner and outer die rotate, small strands of molten plastic overlap each other, bonding themselves together where they overlap. The extruded plastic is then cooled by water; this material is called a *cast*. The next process is orientation. The cast is heated and stretched to the point just before breakage. After the cast is oriented and has become the final product, the net is transverse-wound onto large spools (1).

MANUFACTURE

The manufacturing process of knitted plastic netting offers the most versatile and variety of netting products. Knitting machines offer simple and sophisticated stitch patterns. The first knitting machine was invented by Reverend William Lee, an Englishman, in 1589. The first power knitting machine was introduced in 1832, in Cohoe, New York by Egberts and American (2). The knitting process is complex and varies by different types of machinery. To manufacture plastic netting via knitting, the plastic resin must be manufactured into yarn or tape. The yarn is then put onto a creel, with several individual packages consisting of a single thread, or beam, and several threads wound onto a large spool. The basic concept of knitting is to take the yarn or plastic tape from the creel or beam, and thread the set of needle guides in the knitter. A bed of latch hooks move up and down (vertically) as the needle guides move right and left (horizontally). The needle guides are directed by a pattern chain that controls the different mesh patterns; hexagon, diamond, or countless other configurations. Knitting allows the manufacturer to choose the style and the material to be used, allowing a multitude of products.

APPLICATIONS

Plastic netting is used in an array of applications. As a flexible material, it conforms to irregular products (toys, houseware products, etc.). Netting provides an excellent packaging forum as a decorative and protective overwrap. It provides the necessary air circulation for products such as plants (tropical and flowering) and various types of fruits and vegetables. Because of plastic netting's flexibility, it can be looped, making a convenient carrying handle for the consumer (fresh or frozen whole turkey and ham products). In the meat–poultry industry, netting is used as a transportation vehicle. The meat and poultry items are encased in the netting in the production area and then hung on smoke racks ready to go into the smoke house. The netting allows the meat and poultry products to receive smoke for flavoring and coloring during the cooking process. The netting leaves an attractive pattern on the products, giving them the "old world" look. The netting can be left on the product as a marketing tool for product identity.

Netting has a wide variety of uses in sheet form. It can be used to wrap pallets as an alternative to stretch wrap. The netting can be put up the same way as stretch wrap, to utilize modern equipment and hand applicators that are available. This is an important tool where ventilation or heat dissipation is needed (produce, bagged mulch, flowers, flour, etc). Because of its exceptional strength, netting can be used to wrap heavy loads such as bricks. In sheet form, netting has an abundance of uses. It makes a great fence for construction or snow applications. It can be used as a safety net in construction to catch debris and increase the safety of workers. It is widely used in the horticulture industry as shade cloth protecting plants from the harsh sun. It is also used as bird net, protecting fruit trees, berry bushes, and fish ponds from predator birds.

By using the knitted process to manufacture plastic netting, different-color strings or threads can be combined to form a multicolored netted product. An example is Candy-Cane (trademark) red and white netting used to package Christmas trees (3). This netted package allows the tree to be easily transported from the retail lot to the consumer's tree stand at home. Netting is also used by Christmas-tree growers to compress the tree. This gives the grower the ability to ship more trees, saving in transportation cost. The netting also protects the tree from damage, and it makes the tree much easier to handle. This packaging process also applies to other types of trees (white oak, maple, bamboo, etc.).

Knitted netting is soft, durable, and strong, making it an ideal packaging medium. The produce industry, which uses extruded netting primarily for consumer-sized packages, is seeing a trend moving toward knitted netting. Both styles of netting offer adequate ventilation needed for fruits and vegetables to reduce spoilage. The soft texture of knitted netting does not damage the delicate produce skin and makes an eye-pleasing package. A draw string can be automatically inserted during the knitting process, making a convenient closing mechanism as well as a carrying handle. Potato sacks are a good example of this process.

Plastic netting is a valuable packaging tool. It is resilient, strong, and flexible. Netting can be frozen and then heated, or vice versa, keeping its strength and flexibility. Plastic netting is very cost-effective compared to other forms of packaging and is recyclable. The applications and areas of usage keep growing as creative minds keep developing new and innovative ways to use plastic netting.

Some manufactures are

Tipper Tie-Net, 390 Wegner Drive, West Chicago, IL 60185

Polly Net Inc., P.O. Box 27, Three Rivers, MA 01080

C&K Manufacturing, 28025 Ranney Parkway, Westlake, OH 44140

BIBLIOGRAPHY

1. J. Scoba, Polly Net Inc., P.O. Box 27, Three Rivers, MA 01080.
2. *The World Book Encyclopedia*, Field Enterprises Educational Corporation, 1970, pp. 279–280.
3. "Candy Cane," manufactured by Tipper Tie-Net, 390 Wegner Drive, West Chicago, IL 60185.

Cited Publications

J. Ohlinger, "Netting, Plastic", in A. J. Brody and K. S. Marsh, eds., 2nd ed., The Wiley Encyclopedia of Packaging Technology, 1997, pp. 666–667.

NITRILE POLYMERS

Paul R. Lund
Joseph P. McCaul
The BP Chemical Company,
Cleveland, Ohio

INTRODUCTION

Nitrile polymers are generally those that contain the cyano ($C\equiv N$) functional group, also called the nitrile group. The commercial development of these materials was due in large part to the 1957 discovery by BP Chemicals of a low-cost one-step process for acrylonitrile (AN) production (1). The pure nitrile polymer, polyacrylonitrile (PAN), is 49% nitrile. It is an amorphous, transparent polymer with a relatively low glass-transition temperature ($T_g = 87°C$) (see Polymer properties) that provides an outstanding barrier to gas permeation and exceptional resistance to a wide range of chemical reagents. Unfortunately, its combination of properties is not of commercial value in the packaging industry. Its primary deficiency is that it is not melt processable. It degrades at 428°F (220°C), which is below that required for melt processing. To overcome this handicap, nitrile polymers are produced using acrylonitrile ($CH_2{=}CHCN$) as the monomer with other comonomers that impart melt processability. Through this copolymerization process, the desirable properties can be retained and the undesirable properties can be suppressed.

COPOLYMERS

Styrene–Acrylonitrile (SAN)

Typical SAN polymers are made using a 3:1 ratio, by weight, of styrene to acrylonitrile. The copolymer has a combination of properties that reflect the processability of the styrene component and the chemical resistance of the AN. Gas-barrier properties are low because of the relatively low AN concentration. SAN is of relatively minor significance in packaging, used in applications where PS would suffice with an added measure of chemical resistance.

Acrylonitrile–Butadiene–Styrene (ABS)

ABS is a graft copolymer of SAN onto a polybutadiene backbone. The SAN forms a matrix phase, whereas the polybutadiene forms a discrete (dispersed) phase. A tough impact-resistance thermoplastic is produced by using the grafting mechanism to compatibilize the two phases. Although the polybutadiene is an excellent impact modifier with low T_g ($\cong$ 85°C), its refractive index is different from the SAN matrix polymer. Therefore, in contrast to PS (see Polystyrene), PAN, and SAN are not transparent. ABS is a major commercial thermoplastic, but it is rarely used in packaging because of its opacity, lack of gas-barrier properties, and economics relative to other commodity resins. However, thermoformed ABS (see Thermoforming) has been used, for example, to produce margarine tubs. This is an application in which PS would suffice if not for its limited resistance to stress cracking. A wide range of SAN ratios is used to achieve properties of value in nonpackaging applications.

Acrylic Multipolymers

Some acrylic multipolymers are produced using AN as a comonomer with methyl methacrylate (MMA). Refractive index matched rubber modifiers are incorporated to combine toughness with transparency. These materials are used in healthcare packaging (2) (see Medical packaging) and in some food packaging applications. Because the AN concentration is low, these materials do not have exceptional gas-barrier properties [18.7 $\mathrm{cm^3}$ mil/100 $\mathrm{in.^2}$ d atm at 73°F (23°C)].

High-Nitrile Resins (HNR)

As noted above, SAN is a styrene–acrylonitrile copolymer. Its gas-barrier properties are limited, however, by the low nitrile content. High-barrier melt-processable copolymers can be produced by raising the nitrile content above 25%. Over this threshold, copolymer properties begin to resemble those of PAN, particularly with respect to gas barrier and chemical resistance.

Acrylonitrile–Styrene Copolymers (ANS). High-nitrile copolymers can be produced by combining acrylonitrile and styrene in a 70:30 ratio. This was the approach taken by Monsanto Company (Lopac) and Borg-Warner (Cycopac) during the 1960s and early 1970s in their development of resins for carbonated-beverage packaging. Lopac's composition is 100% copolymer of 70% acrylonitrile and 30% styrene. Cycopac's composition is 90% copolymer of 74% acrylonitrile and 26% methyl acrylate plus 10% butadiene rubber graft (3). As serious commercial development began, toxicological problems with AN surfaced (4). The FDA banned the use of HNR in beverage packaging because of concern for potential AN-extraction from the bottle into the beverage. Since beverages are a major component of the diet, their treatment by FDA was most severe. The FDA continued to permit the use of HNR for direct and continuous nonbeverage-food-contact applications (5) with filling and storage temperatures less than 150°F (65.6°C); but because the principal commercial significance of ANS polymers was in carbonated beverage packaging, all commercial production of ANS polymers was eventually discontinued.

In 1984, the FDA amended its position on HNR-beverage applications (6). Monsanto Company had petitioned on behalf of their ANS high nitrile resin for approval. As described in their process patent (7), the bottle preform is irradiated with an electron beam prior to blowing of the bottle. Monsanto claimed that this process resulted in a bottle that, because of the thermodynamics of the extraction process, would have essentially no extraction of AN by the contained beverage. The FDA did not accept this claim, but it did decide that the extraction would be below the detection limit of 0.16 ppb. The agency ruled that AN concentrations at or below this detection limit would be considered acceptable, and it limited the residual AN content of the finished container of 0.1 ppm. This concentration is current (8).

Rubber-Modified, Acrylonitrile–Methacrylate Copolymers (AN/MA). High barrier properties can also be achieved by copolymerizing acrylonitrile and methacrylate in a 75:25 ratio onto a nitrile rubber backbone. This is the approach taken by BP Chemicals in the production of Barex (registered trademark) resins. Barex's composition is 90% copolymer of 74% acrylonitrile and 26% sytrene plus 10% butadiene rubber graft (3). This family of resins can be processed on almost all conventional plastic processing equipment including, but not limited to, injection, injection blow molding, injection stretch blow molding, extrusion, extrusion blow molding, extrusion stretch blow molding, profile extrusion, pipe extrusion, tubing extrusion, and thermoforming (see individual processing sections). Transparency is retained through the use of a refractive-index-matched rubber modifier.

The Barex family of resins are the only high-nitrile resins in commercial production today and are in full compliance with all applicable FDA regulations for direct food contact and meets all the known requirements of a USP Class VI plastic. Barex is now marketed by INEOS.

PROPERTIES

Among the commercial packaging polymers that have the physical properties required for monolithic structures, HNRs offer the greatest gas barrier [0.8 $\mathrm{cm^3}$ mil/100 $\mathrm{in.^2}$ d atm or 3.0 $\mathrm{cm^2}$ $\mu\mathrm{m/m^2}$ d kPa] and chemical resistance. Their gas-barrier properties (see Barrier polymers) are surpassed only by EVOH (see Ethylene–vinyl alcohol) and PVdC (see Vinylidene chloride copolymers), which are used as components of multilayer structures (see Coextrusions for flexible packaging; Coextrusions for semirigid packaging). Because of the polarity that the nitrile group imparts to the molecule, HNRs show an affinity for water. Water-vapor barrier is lower than that of the nonpolar polyolefins (e.g., polyethylene, polypropylene), but that same polarity imparts resistance to nonpolar solvents. The relatively high flexural modulus (combined with the lower specific gravity) means that for structures with identical geometry, the HNR parts can be source-reduced

Table 1. Properties of High Nitrile Resins

Property	ASTM Test	Units	Barex 210 Resin	Barex 218 Resin
Specific gravity	D1505		1.15	1.11
Yield		in.^{2}/lb at 1 mil	24,080	24,950
Brabender torque		meter-grams	950	1050
Notched Izod	D256	ft-lb/in.	5.0	9.0
Flexural modulus	D790	psi	490,000	400,000
O_2 permeability (73°F, 100% RH)	D3985	cm^3-mil/100 in.^{2} -24 h-atm	0.8	1.6
CO_2 permeability (73°F, 100% RH)	D3985	cm^3-mil/100 in.^{2} -24 h-atm	1.2	1.6
N_2 permeability (73°F, 100% RH)	D3985	cm^3-mil/100 in.^{2} -24 h-atm	0.2	0.4
WVTR (100°F, 90% RH)	F1249	g-mil/100 in.^{2}-24 h-atm	5.0	7.5
Heat deflection temperature	D648	°F	160	170
Heat seal temperature		°F	250–375	275–350

(down-gauged) and therefore designed with less material for equivalent stiffness compared to the polyolefins, PVC, PET, PETG, and many other plastic polymers. A summary of the properties of high-nitrile resins is shown in Table 1.

APPLICATIONS

HNRs are used in packaging in a variety of physical forms. These include: film, semirigid sheet, and injection-molded (see Injection molding) and blow-molded containers. Blown film (see Extrusion) is used in polyolefin-container structures to provide formability, chemical resistance, and gas barrier. Spices, medical devices, and household chemical products are example of such applications. Laminations with polyolefins and aluminum foil are used in applications ranging from food packaging to oil-drilling core wraps (9). These structures have exceptional barrier properties, as well as sealability and chemical resistance. Indeed, their use in sachet packaging is growing rapidly as individual dose and unit packaging become more popular.

The semirigid sheet market for HNR is primarily meat and cheese packaging in thermoformed (see Thermoforming) blister packages. With its excellent gas barrier, clarity, and rigidity, the HNRs are the premium packaging material. Of increasing importance in semirigid applications, however, is disposable medical device packaging (see Medical packaging). Here HNR can be sterilized by either ethylene oxide (ETO) or gamma radiation and is unaffected by plasticizers present in many devices, making it ideal for many medical packaging applications. As a result of its unique combination of properties, including source reduction and superior thermoforming, usage has been steadily increasing in this market area.

Blow-molding applications for HNR are dominated by chemical resistance requirements. Injection blow molding is the most widely used method for manufacturing small containers—for example, bottles for correction fluid, nail enamel, and other cosmetics. Larger bottles are generally extrusion blow-molded. Some important applications include: pesticides, herbicides and other agricultural chemicals, fuel additives, and hard-to-hold household chemicals. Extrusion stretch blow molding is gaining increasing acceptance for bottles 16 oz (473 mL) or larger. The orientation achieved during stretching greatly increases the drop-impact performance, and the walls can be relatively thin.

HNR has been coextruded with many different polymers, but the polyolefins have been of greatest commercial significance. Coextrusions are available in sheet, film, and bottle form. They typically gain gas barrier or chemical resistance from the HNR and water vapor barrier and economics from the polyolefin. In structures with polypropylene, the heat-deflection temperature (HDT) of the structure is increased by the higher HDT of the polypropylene. This permits the use of HNR in high-temperature environments such as microwave ovens.

The adhesive used to combine the layers in an HNR coextrusion are typically styrene–isoprene or styrene–butadiene block copolymers (see Multilayer flexible packaging). Scrap is reusable in the polyolefin layer if the nonolefin percentage in that layer is well-dispersed and of lower concentration than about 15%.

Chemical-resistant coextruded bottles containing HNR are now being commercialized. HNR is the inner contact layer enclosed by adhesive and polyolefin, typically HDPE. Use of a three-layer structure limits the cost and complexity of the machinery. It also places the solvent-resistant polymer in contact with the chemicals. Five layer or laminar structures (see Surface modification; Nylon) using other barrier resins place the polyolefin in direct contact with the aggressive contents of the container. The three-layer structure also allows visual inspection of the barrier layer and maximizes the sealing area of the barrier layer at the pinchoff of the bottle. HNR-coextruded containers offer high performance with economics superior to the other packaging alternatives (10). Thermoplastic coextruded films of 5–7 layers have been reported (11).

Alloying and blending also offer other unique properties that can be imparted to the base resins, typically polyolefins. Here they can be used to reduce ESCR as well as provide increased flexural modulus (stiffness) to polyolefinic resins (12).

The Barex family of resins offers a unique combination of properties to the packaging industry. Barex resins protect products from oxidation and are inert and resistant to chemicals. They meet United States and European regulations and, thus are available for a range of products, They eliminate the need for a separate heat-seal layer and are good against strong ingredients. As bottles, they keep fragrances and flavors in place. The following are applications of Barex (13).

1. *Medicinal Uses.* Catheter trays, sachets, assay trays, transdermic patches. These products are sterilizable.
2. *Personal Care.* Cosmetic packs, perfume, mouthwash, nail enamel, and bath gel bottles.
3. *Industrial Products.* Among many nonpackaging uses, criminal evidence bags and air fresheners.
4. *Food and Beverages.* Fruit juices, meats, and confectionary.

BIBLIOGRAPHY

P. R. Lund and J. P. McCaul, “Nitrile Polymers” in A. J. Brody and K. S. Marsh, eds., *The Wiley Encyclopedia of Packaging Technology*, 2nd edition, Wiley, New York, 1997, pp. 669–672.

Cited Publications

1. J. D. Idol, U.S. Patent 2,904,580 (to BP Chemical, OH), September 15, 1959.
2. J. M. Lasito, “Acrylic Multipolymers in Medical Packaging,” *Proceedings of the TAPPI* **71,** 74, (1982).
3. P. Delassus, “Barrier Polymers” in *Kirk-Othmer Encyclopedia of Chemical Technology*, Vol. 3, 5th edition, Wiley, Hoboken, NJ, 2004, p. 386.
4. Report to the FDA by the Manufacturing Chemists Association, January 14, 1977.
5. *Federal Register* 41 23,940. Title 21, Part 177.1480 (June 14, 1976).
6. *Federal Register* 49 36,637. Title 21, Part 177 (September 19, 1984).
7. M. Salome and S. Steingher, U.S. Patent 4,174,043 (to Monsanto), November 13, 1979.
8. 21CFR section 177.1041 (April 1, 2007).
9. P. K. Hunt and S. J. Waisala, U.S. Patent 4,505,161 (to BP Chemical, OH), March 19, 1985.
10. J. P. McCaul, “The Economics of Coextrusion,” *Proceedings of the High Technology Plastic Container Conference*, SPE, November 11, 1985.
11. A. J. Lischefski, U.S. Patent 7,201,966 (to Curwood, Inc.), April 10, 2007.
12. P. R. Lund and co-workers, “High Nitrile Polymer/Polyolefin Blends: A Low Cost, High Performance Alternative,” *Proceedings of the 1995 Annual Technical Conference*, SPE, May 7–11, 1995.
13. *Barex,* brochure, INEOS, www.INEOS.com. accessed February 2008.

NONWOVENS

J. Robert Wagner
Philadelphia College of Textiles
and Science, Philadelphia,
Pennsylvania

INTRODUCTION

“Nonwovens are fabric-like materials consisting of a conglomeration of fibers that are bonded in some way or other” (1). The total world wide sales of nonwovens in 2006 amounted to 19 billion dollars ($5 \times 109\,t$) (2). Nonwovens may be sold by a yield or area basis, weight basis, or product unit basis. Because of their unique properties and high production rates, nonwovens offer a substantially high performance/price ratio. However, in order to appreciate the full range of products, properties, and end uses of nonwovens, it is necessary to consider the fibers, the web-formation method, and the bonding methods used to make them.

FIBERS

The primary ingredient of nonwovens are the fibers used to produce them. A fiber is substantially longer in length than in diameter. In nonwovens, fibers may vary in length from 1 mm to a continuous length. Short (1-mm) fibers are used in air-laid or wet-laid nonwovens. Spunbonded nonwovens use continuous-length fibers in their fabrication. The length of the fibers will affect both the uniformity of fiber distribution and the strength of the nonwoven. Short fibers tend to give good fiber distribution, but longer fibers tend to produce greater strength. However, the fiber length actually utilized is dependent on the nonwoven-web-formation process and the type of product being manufactured.

The diameter of the fiber affects the properties of the nonwoven considerably. If it was desired to produce a soft nonwoven facial wipe, baby wipe, or polishing cloth, a fine fiber should be used. If, on the other hand, it was desired to produce a scrubbing pad of the required stiffness for a frying pan, large-diameter fibers should be used. The latter would also give high incompressibility or resilience.

While many fibers are perfectly round, some are triangular, square, hollow, and of other shapes. In addition, they may consist of one or more generic type of materials in their makeup.

One major variable in nonwovens is the type of fiber used in its construction. Virtually any fiber can be utilized to make nonwovens. The principal natural fibers found in nonwovens are cotton, jute, and especially wood pulp. The majority of spunbonded fabrics are based on either isotactic polypropylene or polyester. Small quantities are made from nylon 6,6 and an increasing tonnage from flash spun high density polyethylene (3). Because of their far-reaching properties, the range of fiber types available offer great latitude in the performance characteristics of the final nonwoven. Because of their high hydrophobic properties, moisture-barrier properties are provided by polypropylene, polyethylene, polyester, and polytetrafluoroethylene (PTFE). High tensile strength may be obtained using Kevlar aramid, Spectra olefin, nylon, polyester, silk, and glass. High-temperature resistance or low flammability can be obtained with carbon, glass, Kynol novoloid, Kevlar and Nomex aramid, modacrylic, PBI, PTFE, ceramic, and metallic fibers. For composites, glass, carbon, Kevlar, and Nomex aramid may be used. Chemical resistance may be obtained with PTFE, glass, carbon, acrylic, olefin, and some metallic fibers. It should be apparent, therefore, that proper fiber selection is essential in order to ensure desirable end-use performance characteristics of the nonwoven.

NONWOVEN WEB-MANUFACTURING METHODS

Nonwoven webs can be produced in four primary ways: carding, air laying, wet laying, or spunbonding. Within each one of these, the process and resulting product will often vary considerably.

A carding machine feeds a mass of crimped fibers, opens, disentangles, and drafts the fibers and then delivers a thin wide web of uniformly distributed fibers to some form of delivery apron. The fibers used to produce carded nonwovens must have crimp and will usually have a fiber length ranging between 34 and 152 mm.The fibers exiting the card tend to be aligned in the machine direction, and, if used in this manner, the product is referred to as a *parallel-laid nonwoven*. Often it is necessary to combine the web from several carding machines to achieve the desired nonwoven weight. A parallel-laid nonwoven may be up to 11 times stronger in the machine direction or fiber-oriented direction than it is in the cross-machine direction. Also, the elongation in the machine direction is substantially less than that found in the cross-machine direction.

The web exiting the card may be laid back and forth across a moving apron to produce what is known as a *cross-laid nonwoven*. Because systems of fibers cross each other, the resulting nonwoven has more uniform strength and elongation properties than found in parallel-laid nonwovens.

Sometimes a parallel-laid web is combined with a cross-laid web to produce what is termed a *composite carded nonwoven*. The latter has the greatest uniformity in strength and elongation properties of carded nonwovens.

In *randomized carded nonwovens* the card is similar to that used for parallel laying, but the doffer roll is run in a direction counter to that of the main cylinder at the point of near-wire contact. Such a configuration deparallelizes the web, permitting more loft and greater uniformity of strength and elongation in the machine direction and cross direction.

Because of the great latitude in weight, thickness, fiber orientation, strength, elongation, and fibers utilized, carded nonwovens have a vast number of product end-use applications.

Air-laid nonwovens utilize fibers having a length ranging between 1 and 76 mm.The fibers are first opened, then conveyed with an air stream against either a condensing cylinder or a screen to form the web. The product produced tends to have an *x, y, z*-fiber orientation, and as a result the webs are soft and lofty. Such a web is especially useful in padding, insulation, filtration, and wipes.

Wet-laid nonwovens utilize papermaking equipment and technology. The fiber length ranges between 1 and 38 mm.The longer fibers are either glass for roofing shingles and felt or carbon for composites. Shorter natural and synthetic fibers are used in tea bags, automotive air and oil filters, coffee filters, bunting, hang tags, and composites. While flat-tabled fourdrinier machines have been used to make some nonwovens, the best machine for producing wet-laid nonwovens is the inclined-wire machine since long fibers are held in suspension in water at the time of formation on the moving wire. Often multiple headboxes are used to produce layered or stratified high-efficiency air filters and other products.

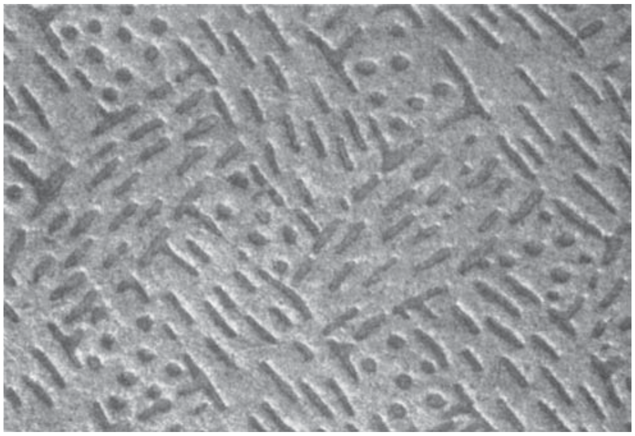

Figure 1. Illustration of a polypropylene melt blown nonwoven that is bonded using a heated pattern engraved calender roll. Such a product is manufactured using a fine oil-loving fiber and is excellent for use as a shop towel or wipe.

Spunbonded and melt-blown nonwovens (see Figure 1) are produced at the time the fiber is extruded from the spinneretts. Spunbonded nonwovens are produced with continuous filament fibers that are drafted with either multiple drafting rollers or high-velocity air used in combination with a venture to achieve molecular fiber orientation. Most spunbonded nonwovens are produced with polypropylene or PET. However, polyethylene, polyester, nylon, acrylic, and rayon are also used.

Melt-blown nonwovens are similar to spunbonded nonwovens but instead use a spinnerette in which both the polymer and hot air exit the spinnerette from different orifices simultaneously. The velocity of the air is sufficient to draft the polymer into very fine discontinuous fibers. Melt-blown nonwovens are used for thermal insulation, filters, padding, personal products, synthetic leather, and other products.

Flash spinning is a radical departure from conventional melt spinning. It begins with a 10–15% polymer solution prepared by dissolving a solid polymer, such as high-density polyethylene, with a suitable solvent. The solution is pressurized and then permitted to expand rapidly through a hole in a spinnerette. The solvent is instantaneously flashed off, leaving behind a three-dimensional film-fibril network called a plexifilament. These plexifilaments are substantially oriented and possess relatively high tenacities. Flash spinning is the most complex and sophisticated method for manufacturing spunbonded fabrics (3).

BONDING METHODS

There are four principal methods of bonding nonwovens: chemical, mechanical, thermal, and inherent or self-bonding. Chemical bonding may rely on binders, solvents, or hydrophilic fibers. Of these, binders are by far the most important. Binders act like adhesive and include acrylic, phenol, urea and melamine formaldehyde, poly(vinyl acetate), styrene–butadiene rubber, vinyl acetate–ethylene, poly(vinyl chloride), nitrile rubber, poly(vinyl alcohol), and other lesser binders (4). Such binders vary considerably in cost, properties, and performance characteristics.

Mechanical bonding includes needle punching, stitch-through, and hydroentangling. Needle punching may use either barbed or forked needles. Barbed needles interlock the fibers to provide mechanical strength to produce such products as papermaker's felts, blankets, geotextiles, synthetic shoe leather, thermal lining, and automotive trunk liners. The forked needles can produce velour and patterned products for use as institutional and automotive carpeting, and throwrugs.

Stitch through technology is a knitting-through process that may be accomplished either with or without yarns to stitch the nonwoven web together. The Mali and Arachne machines are most common and produce products such as carpets, upholstery, blankets, interlining, geotextiles, and automotive products.

The hydrogenating process was invented by E. I. DuPont and was first referred to as the *spunlace process*. It utilizes very fine water jets to mechanically entangle fibrous webs.

Thermal bonding may include the use of thermoplastic fibers, yarns, powders, or films. Often bicomponent fibers having differential melting temperatures in either a core-and-sheath or a side-by-side configuration may be utilized. Bonding is facilitated by through-air heaters, and smooth or patterned calender rolls.

Inherent or self-bonded nonwovens are bonded at the time they are produced. This might include film splitting, blow extrusion, or static-charge extrusion. However, because of their limited properties and aesthetics, nonwovens produced in this manner have limited uses.

Because of the fiber types available, the differences in web-manufacturing processes possible, and the various bonding methods, a cost-effective nonwoven product can be produced with properties that will perform in almost any application. However, adequate performance characteristics are ensured only if a nonwoven incorporates the proper fibers, web manufacturing process, bonding method, and proper finishing and fabrication to produce the final product for the end-use application desired.

PACKAGING APPLICATIONS

Packaging applications for spunbonded fabrics are for the most part a specialty area in which paper products or plastic films do not adequately perform. One of the largest packaging applications is high-performance envelopes.

The major use for spunlace fabrics is in medical products. In medical applications, great progress has been made in the substitution of traditional reuseable woven materials with higher-performing spunbondeds. Historically, flash spunbonded polyethylene was the first 100% spunbonded to find use in sterilzable packaging. Recently, structures of spubonded–meltblown–spunbonded polypropylene has gained acceptance in sterilizable wrap. Spunbonded fabrics with elastomeric properties are now commercial. An economical approach using polypropylene has recently become commercial and is used in medical and hygienic applications (5).

Medical devices or trays of devices are often sterilized after the nonsterile device is sealed in a package. A part of the package, such as the lid, is made from flashspun or spunbonded–meltblown fabric because it possesses the unique property of permitting the sterilizing gas of ethylene oxide to pass through while remaining impenetrable to bacteria (3).

BIBLIOGRAPHY

J. Robert Wagner, "Nonwovens," in *The Wiley Encyclopedia of Packaging,* 2nd edition, John Wiley & Sons, New York, 1997, pp. 672–674.

Cited Publications

1. J. R. Wagner, *Nonwoven Fabrics*, Norristown, PA, 1982.
2. F. Hajduk, M. Blogoer, and T. Sasano, "Nonwovens," *Chemical Economics Handbook,* SRI Consulting, Menlo Park, CA, 2006.
3. R. L. Smorada, "Nonwoven Fabrics, Spunbonded' in *Kirk–Othmer Encyclopedia of Chemical Technology,* Vol. 20, John Wiley & Sons, Hoboken, NJ, 2006.
4. J. R. Wagner, *Nonwoven Notes*, Norristown, PA, 1989.
5. J. Austin, (to BBA Nonwovens), U.S. Patent 6,225,243 May 1, 2001.

NUTRITION LABELING

Jean Storlie
Nutrition Labeling Solutions,
Ithaca, New York
Karen Hare
Nutrition Services, Inc., Fort
Collins, Colorado

The regulatory issues associated with nutrition labeling of food products are complex and extensive. Specific nutrition information must be included on most food products following particular design requirements. The regulations also delineate what nonmandatory nutrition information may be included and how it can be presented. Professionals involved in food processing, manufacturing, marketing, and packaging need to be aware of nutrition labeling regulations and understand how they affect food packaging and marketing.

The purpose of this article is to provide a broad understanding of the nutrition-labeling regulations, explain why they were developed, and describe some of the approaches that may be used for developing nutrition labels. A heavier emphasis will be placed on the issues related to design and format, rather than those pertaining to the content of the nutrition label. Because the regulations are extensive and detailed, it is not possible in the scope of this article to cover all the issues necessary to make this a “how to” reference. In order to apply the regulatory requirements to specific packaging issues, it is necessary to consult with regulatory source documents, regulatory guidebooks, and/or legal or regulatory advisors.

HISTORY OF NUTRITION LABELING

Although the history of food labeling laws reach back as far as 1906 with the Pure Food and Drug Act, it was not until after World War II that consumer interest in and need for nutrition information became evident (1). During the war, food preparation shifted from the household to large-scale food processing. The extended shipping times for delivery of goods needed in war encouraged the development of additives to extend shelf life. Wartime health problems led to the recognition of the relationship between nutrition and diseases, spawning interest in nutrition research and food labeling. Scientists recognized the need for vitamins and minerals to prevent certain diseases such as beriberi and pellagra.

By 1969, there was significant public interest in the relationship between diet and health. As a response to this interest, President Nixon convened the White House Conference on Food, Nutrition, and Health, addressing malnutrition in America (2). He told Congress of the need to ensure that the private food industry serves all Americans well and that people are educated in choosing proper foods. As an outcome of this conference, along with Congress’ effort to mandate nutrition labeling, the Food and Drug Administration adopted a voluntary nutrition labeling program in 1973 that required the labeling of nutrition information whenever a nutrient claim was made or a product was fortified (3). At this time, the voluntary nutrition label focused on key vitamins or minerals known to cause deficiency disease.

Proponents of mandatory nutrition labeling were not satisfied with the limitations of the voluntary program—typically, only products with a good nutrition story included nutrition labeling. Throughout the 1970s, mandatory nutrition labeling continued to be addressed by legislators—in particular, Senator George McGovern, who chaired the Senate Select Committee on Nutrition and Human Needs. This Committee investigated a number of nutrition issues affecting Americans and was responsible for issuing the U.S. *Dietary Goals*, the first government report setting prudent dietary guidelines for Americans (4). In 1978, McGovern initiated a series of hearings to explore nutrition labeling and information, where he is quoted: “It appears from all I have heard and read to date that the present labeling system is not useful or appropriate. Therefore we must determine what nutrition information the public wants and needs, and how best to convey that information” (5). Although the hearing displayed the bipartisan nature of the issue, it took Congress another 13 years before the Nutrition Labeling and Education Act of 1990 (NLEA) was passed.

With the election of President Reagan in 1980, the thrust to adopt mandatory nutrition-labeling legislation came to an abrupt halt (1). Deregulation limited available resources, causing FDA to focus on food-safety issues and to deemphasize economic issues such as food labeling. Despite this shift in legislative priorities, there were major advances in science that documented the link between nutrition and health. Several reports issued by the federal government (6–8), in addition to reports released by nonprofit agencies, such as the American Cancer Society (9) and the American Heart Association (10), clearly showed the growing consensus about the relationship between dietary imbalances and chronic diseases, specifically the overconsumption of calories, fat, saturated fat, cholesterol, and sodium and the underconsumption of dietary fiber. As a result of extensive media coverage of these findings, consumers began to demand healthier food products and more information about the fat, cholesterol, and fiber content of foods. Food manufacturers responded by introducing nutrient-focused products—products lower in fat, cholesterol, and sodium and high in fiber proliferated. Unfortunately, there were no guidelines for defining “low” or “high” or for labeling nutrients such as dietary fiber, saturated fat, or cholesterol. As a result, manufacturers’ efforts to produce and market such products without consistent rules led to incidence of abuse, and consumer groups complained of food-labeling deceptions. By the end of the 1980s, the food industry, as well as regulators and consumers, were frustrated by the contradictions that prevailed on grocery-store shelves.

It was not until President Bush took office in the late 1980s that legislative and regulatory efforts again focused on nutrition labeling. Senators Metzenbaum, Kennedy, and Hatch and Representatives Waxman and Madigan renewed the spirit of the 1970s with nutrition labeling regulations that ultimately resulted in mandatory labeling, nutrient content and health claim definitions, and federal preemption, now known as NLEA. While these legislators were lobbying for mandatory nutrition labeling laws, the National Academy of Sciences’ Institute of Medicine (IOM) issued a report entitled *Nutrition Labeling: Issues and Directions for the 1990s* (11). The IOM report recommended changes in food labeling to assist consumers in implementing the recommendations of the Surgeon General (7) and the National Research Council (8). The FDA responded by working with all concerned parties, including industry, consumer groups, and the states, to define regulations that would meet the goals set out by the IOM report.

On November 8, 1990, President George Bush signed into law the Nutrition Labeling and Education Act (NLEA) of 1990 (12), which dramatically changed the way that food products were labeled in the United States. The NLEA represents a comprehensive mandatory nutrition-labeling system, designed to help consumers meet the U.S. *Dietary Guidelines* (6) and reduce their risk of chronic diseases. The intent of these regulations was to the provide guidance to food manufacturers and package designers needed to ensure consistent presentation of nutrition information and to prevent erroneous nutrient content and health claims.

The only significant change that has been made to the Nutrition Facts panel since the implementation of NLEA in the early 1990s was on July 9, 2003, when FDA issued a regulation requiring manufacturers to also list trans fat on the Nutrition Facts panel of food products. This regulation was the result of growing scientific reports confirming the relationship between trans fat and an increased risk of coronary heart disease.

REGULATORY AGENCIES

Regulation of food labeling falls primarily under the jurisdiction of two federal agencies: the Food and Drug Administration (FDA) and the United States Department of Agriculture (USDA) (13). The USDA's Food Safety and Inspection Service (FSIS) oversees food labeling of products containing meat or poultry ($\geq 2\%$ or more cooked, $\geq 3\%$ raw). All other food products fall under the jurisdiction of the Center for Food Safety and Applied Nutrition (CFSAN) of FDA. FDA regulations are governed by the Federal Food, Drug, and Cosmetic Act (FDCA) and the Fair Packaging and Labeling Act (FPLA). [The Nutrition Labeling and Education Act of 1990 (NLEA) is an amendment to the FDCA.] The USDA's regulatory role and responsibilities are defined by the Federal Meat Inspection and Poultry Products Inspection Acts. Because the two agencies are governed by separate laws, they have different missions, philosophies, and approaches to food labeling. This results in subtle differences throughout the regulations.

The USDA's primary regulatory role has been to prevent public health hazards resulting from improper handling of meat and poultry during production and packaging. The USDA's network of field offices are responsible for conducting frequent plant inspections, and the national office administers a label preapproval program. Through these mechanisms, the USDA tightly controls food labeling during the production process. Unlike the USDA, the FDA has not been funded to function as an inspection service; therefore, the agency does not have the staff resources to play a hands-on role in label development and approval. The FDA relies on postmarket surveys to enforce the regulations.

As discussed above, Congress passed the NLEA in 1990, mandating the FDA to initiate extensive changes in the content and format of the nutrition label. FDA responded by issuing final rules in January 1993 (14). Nutrition labeling of USDA products was not included in the Congressional mandate; however, the USDA decided to follow suit in order to prevent consumer confusion arising from two different nutrition labels (15). In most of the significant aspects of nutrition labeling, the USDA regulations mimic the FDA's; however, the regulations diverge in a few areas. For example, the USDA has different exemption criteria, more relaxed rules for use of the "Simplified" format, and less extensive requirements for statements that accompany nutrient content claims.

NUTRITION FACTS PANEL

The Nutrition Facts panel presents the nutrient profile of a food product on a per serving basis. Since a goal of NLEA was to make nutrition information easy for consumers to locate, read, and understand, both the content and layout of the Nutrition Facts panel were studied extensively before the regulations were finalized. The Nutrition Facts panel focuses on the nutrients important to the health of Americans (e.g., calories, fat, saturated fat, trans fat, cholesterol, sodium, fiber). The nutrient content of the food is presented in absolute terms (e.g., grams, milligrams) and as a percentage of the Daily Value (% Daily Value) for those nutrients where FDA has establised a Daily Value. Percentages provide a method for comparing the nutrient profile of the food to recommended nutrient intakes. Larger food packages are also required to include a list of the Daily Values at two calorie levels (i.e., 2000 and 2500) in a footnote at the bottom of the Nutrition Facts Panel. The serving size information has been standardized to make it easier to compare similar products. Serving sizes are presented in common household measures (e.g., cups, tablespoons) to help consumers visualize portion sizes, as well as metric units (e.g., grams), to encourage familiarity with the International System of Measures (13).

To maintain a consistent look from package to package, both FDA and USDA regulations explicitly define the layout of the Nutrition Facts panel (Figure 1). A hairline box surrounds the nutrition information, which is presented in a required order. The type size and leading (spacing between lines of type) of each line is specified. Boldface type is used to enhance certain nutrients, and other nutrients are indented. Heavy-, medium-, and lightweight rules are incorporated in specified places.

To provide some flexibility in tailoring the Nutrition Facts panel to various food packages, the regulations allow for several variations of the Nutrition Facts layout pictured in Figure 1. These variations are not a random choice; they each have explicit usage criteria (13). Format options are based on the nutrient profile of the food. Display options are available to accommodate different package shapes and sizes, as well as special situations (e.g., variety packages, foods for children, bilingual labels). In addition, the regulations allow for modification of the Nutrition Facts on packages that have limited space for labeling.

Format Options

The format of the Nutrition Facts panel refers to the nutrients listed on the panel (13). The regulations define 14 mandatory nutrients for inclusion in the Nutrition Facts panel; the "Full" format includes these 14 nutrients (Figure 1). In addition, the regulations allow for inclusion of certain nonmandatory nutrients, on either a required or voluntary basis. The Extended format accommodates the inclusion of nonmandatory nutrients in a specified order. An example of the Extended format is presented in Figure 2.

When a food product has one or more mandatory nutrients at an insignificant level (e.g., nutrient declaration of 0), an abbreviated format may be used. The "Shortened" format is available for FDA products that have between one and six insignificant nutrients. With this format, insignificant nutrients may be listed in a footnote stating, "Not a significant source of [list of

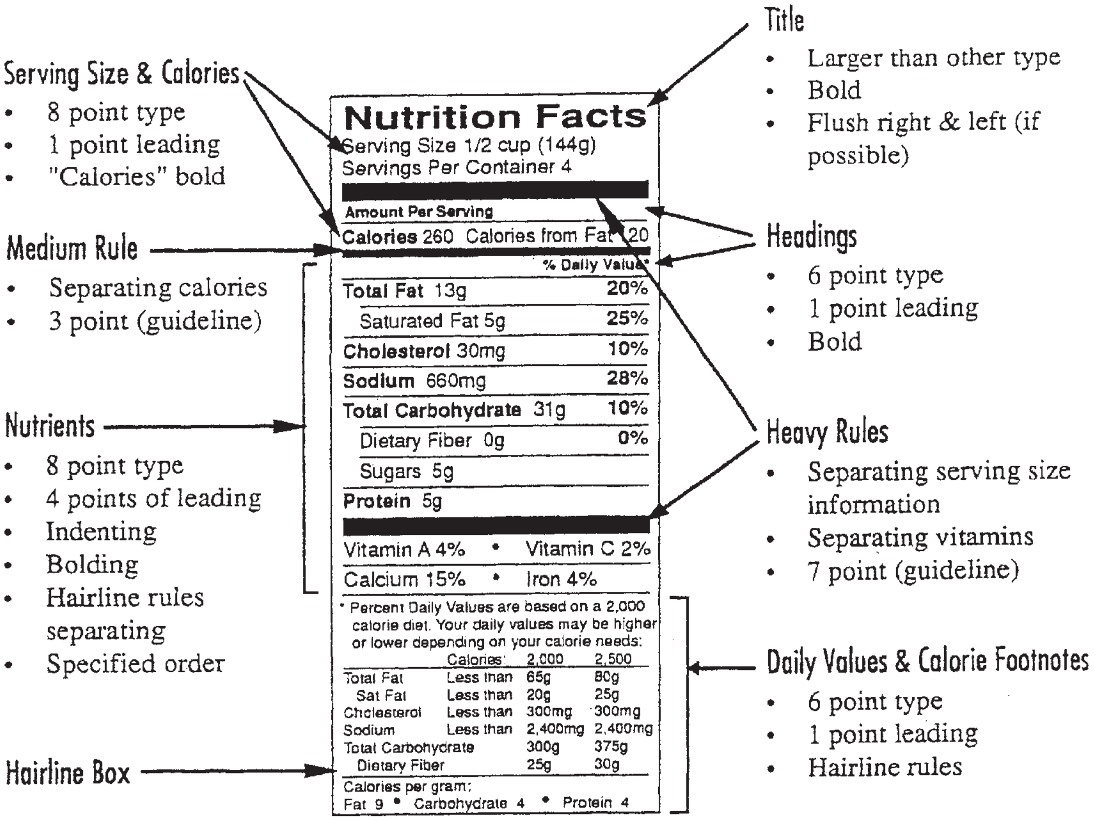

Nutrition Facts

Serving Size 1/2 cup (144g)
Servings Per Container 4

Amount Per Serving

Calories 260 Calories from Fat 120

	% Daily Value*
Total Fat 13g	20%
Saturated Fat 5g	25%
Cholesterol 30mg	10%
Sodium 660mg	28%
Total Carbohydrate 31g	10%
Dietary Fiber 0g	0%
Sugars 5g	
Protein 5g	

Vitamin A 4% • Vitamin C 2%
Calcium 15% • Iron 4%

* Percent Daily Values are based on a 2,000 calorie diet. Your daily values may be higher or lower depending on your calorie needs:

	Calories:	2,000	2,500
Total Fat	Less than	65g	80g
Sat Fat	Less than	20g	25g
Cholesterol	Less than	300mg	300mg
Sodium	Less than	2,400mg	2,400mg
Total Carbohydrate		300g	375g
Dietary Fiber		25g	30g

Calories per gram:
Fat 9 • Carbohydrate 4 • Protein 4

Figure 1. Design features of the Nutrition Facts panel.

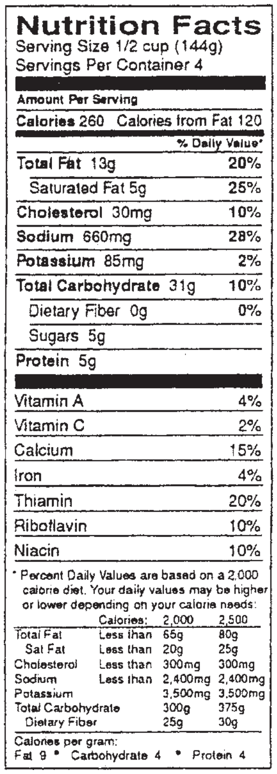

Nutrition Facts

Serving Size 1/2 cup (144g)
Servings Per Container 4

Amount Per Serving

Calories 260 Calories from Fat 120

	% Daily Value*
Total Fat 13g	20%
Saturated Fat 5g	25%
Cholesterol 30mg	10%
Sodium 660mg	28%
Potassium 85mg	2%
Total Carbohydrate 31g	10%
Dietary Fiber 0g	0%
Sugars 5g	
Protein 5g	
Vitamin A	4%
Vitamin C	2%
Calcium	15%
Iron	4%
Thiamin	20%
Riboflavin	10%
Niacin	10%

* Percent Daily Values are based on a 2,000 calorie diet. Your daily values may be higher or lower depending on your calorie needs:

	Calories:	2,000	2,500
Total Fat	Less than	65g	80g
Sat Fat	Less than	20g	25g
Cholesterol	Less than	300mg	300mg
Sodium	Less than	2,400mg	2,400mg
Potassium		3,500mg	3,500mg
Total Carbohydrate		300g	375g
Dietary Fiber		25g	30g

Calories per gram:
Fat 9 • Carbohydrate 4 • Protein 4

Figure 2. Extended Nutrition Facts format.

insignificant nutrients].” FDA products with seven or more insignificant nutrients may bear the Simplified format that allows insignificant nutrients and the Daily Values table in the footnote to be omitted. However, if nonmandatory nutrients are declared, then a variation, called the “Simplified Extended” format, is used. USDA employs a different approach to the Simplified format. The Simplified format is available for products that have one or more noncore, mandatory nutrients at insignificant levels. With all these abbreviated formats, five core nutrients (viz., calories, total fat, sodium, total carbohydrate, protein) must be listed, even if they are insignificant. Figure 3 presents examples of the abbreviated formats.

Display Options

The “Standard” display (vertical column) pictured in Figure 1 is the “model” Nutrition Facts layout from which all others are derived (13). On packages with limited vertical space, the “Modified” (footnote to the side) display may be used. If neither the Standard nor Modified displays will fit, then the “Tabular” (horizontal) display may be used. Figure 4 presents the Modified and Tabular displays.

To accommodate special packaging and labeling situations, other displays are allowed. The “Dual Column” display provides for listing nutrients on an “as prepared” as well as an “as packaged” basis. The “Aggregate” display

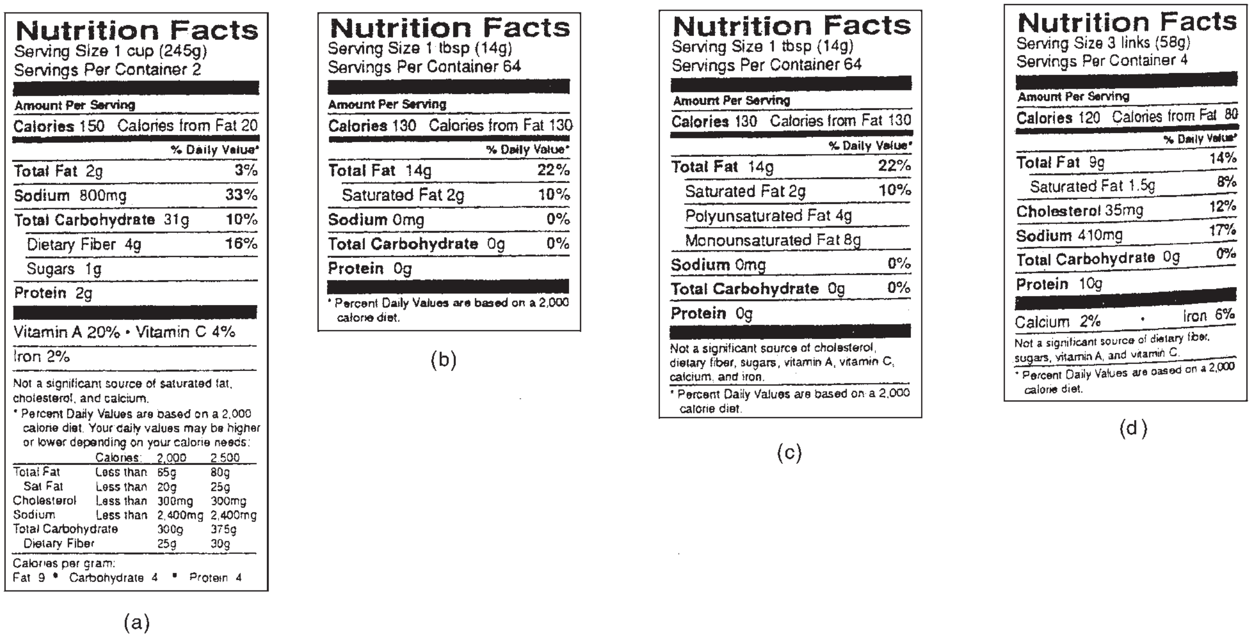

Nutrition Facts
Serving Size 1 cup (245g)
Servings Per Container 2

Amount Per Serving
Calories 150 Calories from Fat 20

% Daily Value*

Total Fat 2g	3%
Sodium 800mg	33%
Total Carbohydrate 31g	10%
Dietary Fiber 4g	16%
Sugars 1g	
Protein 2g	

Vitamin A 20% • Vitamin C 4%
Iron 2%

Not a significant source of saturated fat, cholesterol, and calcium.

* Percent Daily Values are based on a 2,000 calorie diet. Your daily values may be higher or lower depending on your calorie needs:

	Calories:	2,000	2,500
Total Fat	Less than	65g	80g
Sat Fat	Less than	20g	25g
Cholesterol	Less than	300mg	300mg
Sodium	Less than	2,400mg	2,400mg
Total Carbohydrate		300g	375g
Dietary Fiber		25g	30g

Calories per gram:
Fat 9 • Carbohydrate 4 • Protein 4

(a)

Nutrition Facts
Serving Size 1 tbsp (14g)
Servings Per Container 64

Amount Per Serving
Calories 130 Calories from Fat 130

% Daily Value*

Total Fat 14g	22%
Saturated Fat 2g	10%
Sodium 0mg	0%
Total Carbohydrate 0g	0%
Protein 0g	

* Percent Daily Values are based on a 2,000 calorie diet.

(b)

Nutrition Facts
Serving Size 1 tbsp (14g)
Servings Per Container 64

Amount Per Serving
Calories 130 Calories from Fat 130

% Daily Value*

Total Fat 14g	22%
Saturated Fat 2g	10%
Polyunsaturated Fat 4g	
Monounsaturated Fat 8g	
Sodium 0mg	0%
Total Carbohydrate 0g	0%
Protein 0g	

Not a significant source of cholesterol, dietary fiber, sugars, vitamin A, vitamin C, calcium, and iron.

* Percent Daily Values are based on a 2,000 calorie diet.

(c)

Nutrition Facts
Serving Size 3 links (58g)
Servings Per Container 4

Amount Per Serving
Calories 120 Calories from Fat 80

% Daily Value*

Total Fat 9g	14%
Saturated Fat 1.5g	8%
Cholesterol 35mg	12%
Sodium 410mg	17%
Total Carbohydrate 0g	0%
Protein 10g	

Calcium 2% • Iron 6%

Not a significant source of dietary fiber, sugars, vitamin A, and vitamin C.

* Percent Daily Values are based on a 2,000 calorie diet.

(d)

Figure 3. Abbreviated Nutrition Facts format: (**a**) Shortened format; (**b**) FDA Simplified format; (**c**) FDA Simplified Extended format; (**d**) USDA Simplified format.

allows for presentation of nutrition information for a variety of products contained within one package (e.g., variety package of cereal). Figure 5 pictures the Dual Column and Aggregate displays.

A "Bilingual" display accommodates inclusion of a second language in the Nutrition Facts panel. Special labeling requirements apply to foods intended for young children, so the Nutrition Facts panel is modified for these products.

Package-Size Considerations

For packages with <40 in.^{2} of "available space to bear labeling," any of the displays can be modified to create a smaller Nutrition Facts panel. Specifically, the Daily Values table may be omitted from the footnote and abbreviations may be used. Figure 6 illustrates these modifications of the Standard and Tabular displays.

On packages with <12 in.^{2} of available space that contain no other nutrition information and make no claims, the Nutrition Facts panel may be replaced with an address or phone number where nutrition information can be obtained. The "Linear" (paragraph) display is provided to accommodate nutrition labeling of these small packages when claims or nutrition information is present (Figure 7). (A larger display may be employed at the manufacturer's discretion.) If no other display will fit, then the Linear (paragraph) display also may be used on packages with 12–40 in.^{2} of available space.

Table 1 summarizes what display options are available to various package sizes and the modifications that can be made.

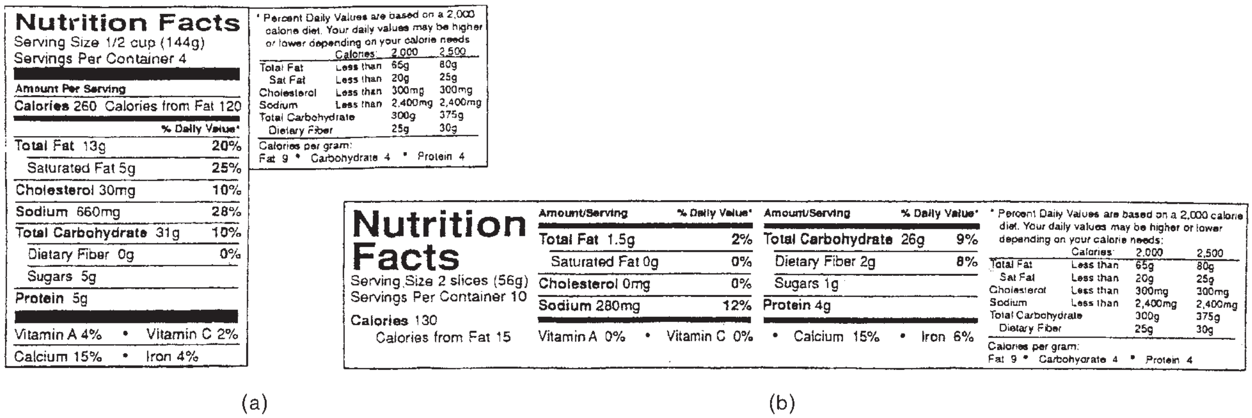

Nutrition Facts
Serving Size 1/2 cup (144g)
Servings Per Container 4

Amount Per Serving
Calories 260 Calories from Fat 120

% Daily Value*

Total Fat 13g	20%
Saturated Fat 5g	25%
Cholesterol 30mg	10%
Sodium 660mg	28%
Total Carbohydrate 31g	10%
Dietary Fiber 0g	0%
Sugars 5g	
Protein 5g	

Vitamin A 4% • Vitamin C 2%
Calcium 15% • Iron 4%

* Percent Daily Values are based on a 2,000 calorie diet. Your daily values may be higher or lower depending on your calorie needs

	Calories:	2,000	2,500
Total Fat	Less than	65g	80g
Sat Fat	Less than	20g	25g
Cholesterol	Less than	300mg	300mg
Sodium	Less than	2,400mg	2,400mg
Total Carbohydrate		300g	375g
Dietary Fiber		25g	30g

Calories per gram:
Fat 9 • Carbohydrate 4 • Protein 4

(a)

Nutrition Facts
Serving Size 2 slices (56g)
Servings Per Container 10
Calories 130
Calories from Fat 15

Amount/Serving	% Daily Value*	Amount/Serving	% Daily Value*
Total Fat 1.5g	2%	**Total Carbohydrate** 26g	9%
Saturated Fat 0g	0%	Dietary Fiber 2g	8%
Cholesterol 0mg	0%	Sugars 1g	
Sodium 280mg	12%	**Protein** 4g	

Vitamin A 0% • Vitamin C 0% • Calcium 15% • Iron 6%

* Percent Daily Values are based on a 2,000 calorie diet. Your daily values may be higher or lower depending on your calorie needs:

	Calories:	2,000	2,500
Total Fat	Less than	65g	80g
Sat Fat	Less than	20g	25g
Cholesterol	Less than	300mg	300mg
Sodium	Less than	2,400mg	2,400mg
Total Carbohydrate		300g	375g
Dietary Fiber		25g	30g

Calories per gram:
Fat 9 • Carbohyorate 4 • Protein 4

(b)

Figure 4. Modified (**a**) and Tabular (**b**) displays.

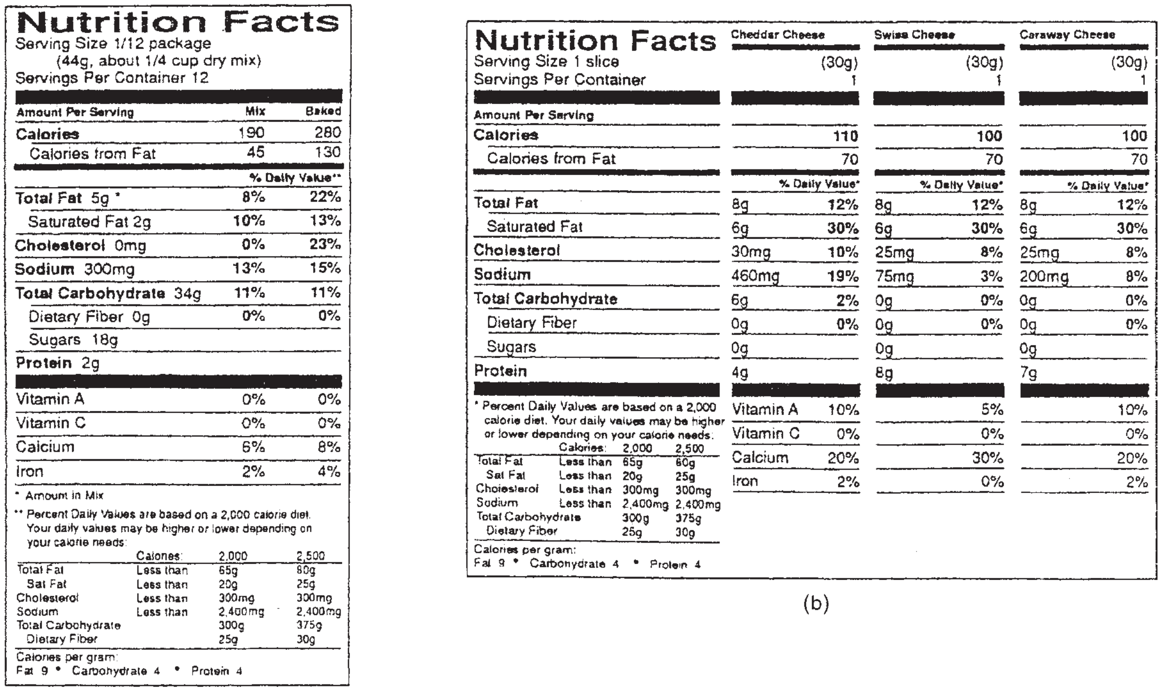

Nutrition Facts
Serving Size 1/12 package
(44g, about 1/4 cup dry mix)
Servings Per Container 12

Amount Per Serving	Mix	Baked
Calories	190	280
Calories from Fat	45	130
	% Daily Value**	
Total Fat 5g *	8%	22%
Saturated Fat 2g	10%	13%
Cholesterol 0mg	0%	23%
Sodium 300mg	13%	15%
Total Carbohydrate 34g	11%	11%
Dietary Fiber 0g	0%	0%
Sugars 18g		
Protein 2g		
Vitamin A	0%	0%
Vitamin C	0%	0%
Calcium	6%	8%
Iron	2%	4%

* Amount in Mix

** Percent Daily Values are based on a 2,000 calorie diet. Your daily values may be higher or lower depending on your calorie needs:

	Calories:	2,000	2,500
Total Fat	Less than	65g	80g
Sat Fat	Less than	20g	25g
Cholesterol	Less than	300mg	300mg
Sodium	Less than	2,400mg	2,400mg
Total Carbohydrate		300g	375g
Dietary Fiber		25g	30g

Calories per gram:
Fat 9 • Carbohydrate 4 • Protein 4

(a)

Nutrition Facts

	Cheddar Cheese		Swiss Cheese		Caraway Cheese	
Serving Size 1 slice	(30g)		(30g)		(30g)	
Servings Per Container	1		1		1	
Amount Per Serving						
Calories	110		100		100	
Calories from Fat	70		70		70	
		% Daily Value*		**% Daily Value***		**% Daily Value***
Total Fat	8g	12%	8g	12%	8g	12%
Saturated Fat	6g	30%	6g	30%	6g	30%
Cholesterol	30mg	10%	25mg	8%	25mg	8%
Sodium	460mg	19%	75mg	3%	200mg	8%
Total Carbohydrate	6g	2%	0g	0%	0g	0%
Dietary Fiber	0g	0%	0g	0%	0g	0%
Sugars	0g		0g		0g	
Protein	4g		8g		7g	
	Vitamin A	10%		5%		10%
	Vitamin C	0%		0%		0%
	Calcium	20%		30%		20%
	Iron	2%		0%		2%

* Percent Daily Values are based on a 2,000 calorie diet. Your daily values may be higher or lower depending on your calorie needs:

	Calories:	2,000	2,500
Total Fat	Less than	65g	80g
Sat Fat	Less than	20g	25g
Cholesterol	Less than	300mg	300mg
Sodium	Less than	2,400mg	2,400mg
Total Carbohydrate		300g	375g
Dietary Fiber		25g	30g

Calories per gram:
Fat 9 • Carbohydrate 4 • Protein 4

(b)

Figure 5. Dual Column (**a**) and Aggregate (**b**) displays.

CLAIMS

The regulations define two categories of claims: nutrient content (or descriptors) and health claims (13). Nutrient-content claims are statements about the level of a nutrient in a food. Health claims, on the other hand, link the nutrient profile of a food to a health or disease condition. Nutrient content claims are used widely by the food industry. Since the regulations governing health claims are more complicated and restrictive, health claims are not as common.

Nutrient-Content Claims

Nutrient-content claims (sometimes referred to as "descriptors") characterize the level of a nutrient in a food. Only defined terms can be used on the label to describe a food's nutrient content. When these terms are used, a product must meet specific criteria. Nutrient-content claims may be implied or expressed, comparative or absolute (Table 2).

When a product bears a nutrient content claim (whether it is implied or expressed), certain information must be incorporated into the design of the package. Depending on the type of claim and whether the product is governed by FDA or USDA, the requirements for claims-related information will vary. FDA mandates more extensive information than USDA (i.e., the inclusion of either a Referral or Disclosure Statement), and both agencies require additional information on products bearing comparative claims. All required statements must adhere to placement and typesetting requirements that are defined by the regulations. Table 3 summarizes the

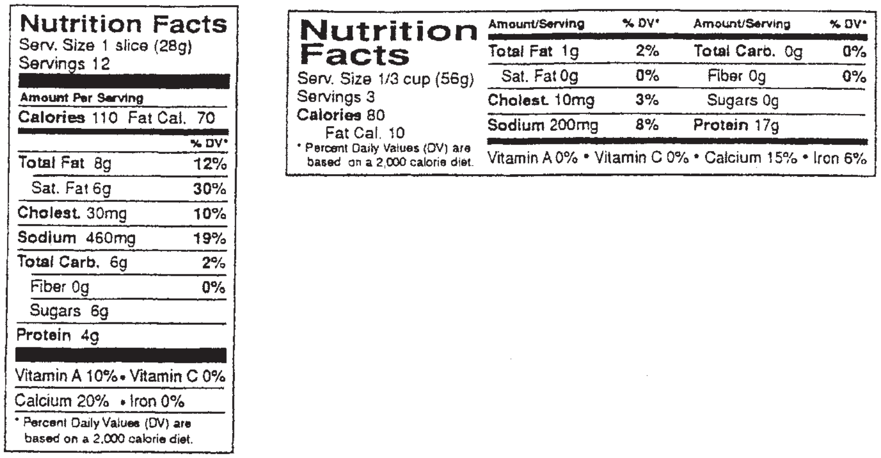

Nutrition Facts
Serv. Size 1 slice (28g)
Servings 12

Amount Per Serving	
Calories 110 Fat Cal. 70	
	% DV*
Total Fat 8g	12%
Sat. Fat 6g	30%
Cholest. 30mg	10%
Sodium 460mg	19%
Total Carb. 6g	2%
Fiber 0g	0%
Sugars 6g	
Protein 4g	

Vitamin A 10% • Vitamin C 0%
Calcium 20% • Iron 0%

* Percent Daily Values (DV) are based on a 2,000 calorie diet.

Nutrition Facts
Serv. Size 1/3 cup (56g)
Servings 3
Calories 80
Fat Cal. 10

Amount/Serving	% DV*	Amount/Serving	% DV*
Total Fat 1g	2%	**Total Carb.** 0g	0%
Sat. Fat 0g	0%	Fiber 0g	0%
Cholest. 10mg	3%	Sugars 0g	
Sodium 200mg	8%	**Protein** 17g	

Vitamin A 0% • Vitamin C 0% • Calcium 15% • Iron 6%

* Percent Daily Values (DV) are based on a 2,000 calorie diet.

Figure 6. Modification of Standard and Tabular displays for packages with <40 in.^{2} "available space to bear labeling."

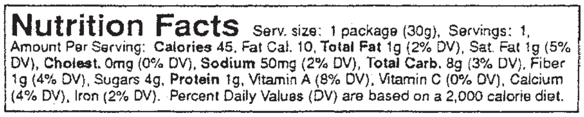

Nutrition Facts Serv. size: 1 package (30g), Servings: 1, Amount Per Serving: **Calories** 45, Fat Cal. 10, **Total Fat** 1g (2% DV), Sat. Fat 1g (5% DV), **Cholest.** 0mg (0% DV), **Sodium** 50mg (2% DV), **Total Carb.** 8g (3% DV), Fiber 1g (4% DV), Sugars 4g, **Protein** 1g, Vitamin A (8% DV), Vitamin C (0% DV), Calcium (4% DV), Iron (2% DV). Percent Daily Values (DV) are based on a 2,000 calorie diet.

Figure 7. Linear display.

required statements that must accompany nutrient-content claims.

When an FDA-regulated product bearing a nutrient-content claim contains excessive levels of key nutrients that are associated with health risks, FDA requires a Disclosure Statement that flags the nutrient(s) of concern and directs the consumer to the Nutrition Facts panel. The statment must be appear next to the largest claim on each panel unless the claim is on the same panel as the Nutrition Facts statement.

Both FDA and USDA product labels that bear a comparative claim must include a Nutrient Claim Clarification statement and Quantitative Information. On FDA products, this information is required in addition to a Referral or Disclosure Statement. The Nutrient Claim Clarification statement identifies the comparison food and states the percentage (or fractional) difference in the subject nutrient(s) between the product and its comparison food [e.g., 50% less fat than (comparison food), ~33% fewer calories than (comparison food)]. The Quantitative Information provides the absolute amounts of the subject nutrient(s) in the product and the comparison food. This required information can be presented in a chart or narrative format.

Health Claims

FDA has defined nine health claims and created very strict criteria for use of these claims. No other nutrient-disease associations can be made in food labeling. Written statements, third-party references (e.g., "American Heart Association"), use of certain terminology in a brand name (e.g., "heart"), symbols, and vignettes may be considered a health claim if the context in which they are presented either suggests or states a relationship between a nutrient

Table 1. Display Options Based on Package Size

Package Size	Display Options	Modifications
>40 in.^{2}	Standard	None available
	Modified (if limited vertical space)	
	Tabular (if limited vertical space)	
	Dual Column	
	Aggregate	
	Bilingual	
	Child	
12–40 in.^{2}	Standard	Daily Value table omitted from footnote
	Tabular	
	Dual Column	Abbreviations permitted
	Aggregate	
	Bilingual	
	Child	
	Linear (if no other displays will fit)	
<12 in.^{2}	Linear	Address/phone number (if no claims or nutrition information)
		Daily Value table omitted from footnote
		Abbreviations permitted

Table 2. Types of Nutrient-Content Claims

Type of Claim	Definition	Examples
Absolute	Statement about the nutrient level in food without referencing or comparing to another product	Free Low Very low High Source of Healthy Lean Extralean
Comparative	A claim comparing the level of a nutrient in one product to the level of that nutrient in another product or class of foods; also called a "relative claim"	Light or "lite" Reduced Less More
Implied	Statement that leads a consumer to assume that a nutrient is absent or present in a certain amount or that the food may be useful in achieving dietary recommendations	"High in oat bran" implies "high in dietary fiber"
Expressed	Any direct statement about the level or range of a nutrient in a food	Low fat Low cholesterol Low sodium High in dietary fiber

Table 3. Required Statements for Nutrient Content Claims

<table>
<tr><th></th><th colspan="2">When to Include</th><th></th></tr>
<tr><th></th><th>Absolute Claims</th><th>Comparative Claims</th><th>What to State</th></tr>
<tr><td>Disclosure Statement</td><td>FDA products</td><td>FDA products</td><td>"See ——— panel for information on [<i>nutrient(s)</i>] and other nutrients."</td></tr>
<tr><td>Nutrient Claim</td><td></td><td>FDA and USDA products</td><td>Identity of comparison food and percent (or fraction) by which the nutrient differs</td></tr>
<tr><td>Clarification Statement</td><td></td><td></td><td>Example: "1/3 fewer calories than comparison food]."</td></tr>
<tr><td>Quantitative Information</td><td></td><td>FDA and USDA products</td><td>Comparison of claims-related nutrient(s) in product and comparison food on per serving basis. Example:
<table>
<tr><th>Product</th><th>Fat[a]</th><th>Calories[a]</th></tr>
<tr><td>Light</td><td>4 g</td><td>200</td></tr>
<tr><td>Regular</td><td>8 g</td><td>300</td></tr>
</table></td></tr>
</table>

Source: J. Storlie, *Food Label Design: A Regulatory Resource Kit*, Institute of Packaging Professionals, Herndon, VA, 1996. Used with permission.

[a] Per labeled serving.

and a disease. When a statement, symbol, vignette, or other form of communication suggests a link between a nutrient and a disease, it is considered an implied health claim, and it is subject to all the requirements for health claims. The USDA has proposed regulations that parallel the FDA's.

The regulations governing health claims are very complex. When a product bears a health claim, very specific language must be used on the label. The regulations pertaining to each health claim outline the assertions that can be made and any additional required statements. When a claim is implied through graphic representations, a complete claim statement must be included on the label.

Since the required statements can be quite lengthy, the complete claim may appear on a back or side panel. When this approach is taken, a reference statement may be placed on the front panel, flagging the claim and directing the consumer to the location of the claim (e.g., "See ——— for information about the relationship between ——— and ———." The first blank contains the location of the health claim (e.g., back panel, attached pamphlet); the second blank should state the nutrient; and the third blank, contains the disease or health-related condition. Products bearing health claims must undergo careful review by legal and/or regulatory experts to make certain that the language is accurate and any graphics are acceptable.

NUTRITION-LABELING RESOURCES

Although this article summarizes the evolution of nutrition labeling and provides an overview of the nutrition-labeling regulations, it is not a sufficient resource for implementing the regulations. Understanding and complying with nutrition-labeling regulations requires a detailed working knowledge of the regulations and continuous monitoring of regulatory changes. Regulatory guidebooks, such as those listed in the Bibliography at the end of this article, can be expedient; however, consulting the regulatory source documents is the most accurate approach.

All federal regulations are compiled and updated annually in the *Code of Federal Regulations* (*CFR*). Each federal agency is assigned a numerical title of the *CFR* in which the agency's regulations are published. The FDA regulations are published in Title 21, which includes eight volumes of regulations, pertaining to foods, drugs, and other products administered by the FDA. The first three volumes contain the regulations related to foods (Part 1 through 99, Parts 100 through 169, and Parts 170 through 199). USDA's food labeling regulations can be found in the second volume (Parts 200 to end) of Title 9 of the *CFR*.

Since the *CFR* is updated only on a annual basis, other sources must be consulted to identify recent regulatory changes. The *Federal Register* releases proposed and final regulations for all federal regulations on a daily basis. Regular monitoring of the *Federal Register* is the most accurate method of staying current. Many trade publications include columns that summarize regulatory updates of importance to their readers. *Food Labeling News*, a weekly newsletter, is another source for obtaining current information on regulatory aspects of food labeling, advertising, and packaging.

BIBLIOGRAPHY

1. Frank Olsson and P. C. Weeda, *Complying with the Nutrition Labeling and Education Act*, The Food Institute, Fairlawn, NJ, 1993.
2. *White House Conference on Food, Nutrition, and Health. Final Report,* U.S. Government Printing Office, Washington, DC, 1970.
3. *Fed. Reg.* **38**, 2125–2132 (January 19, 1973).
4. *Dietary Goals for the United States*, U.S. Government Printing Office, Washington, DC, Stock No. 052-070-04376-8, 1977.
5. Nutrition Labeling and Information: Hearings Before the Subcommittee on Nutrition of the Senate Committee on Agriculture, Nutrition, and Forestry, 95th Congress, 2nd Session, 38, 1978.

6. U.S. Department of Agriculture/Department of Health and Human Services, *Nutrition and Your Health: Dietary Guidelines for Americans*, Consumer Information Center, Department 622N, Pueblo, CO, 1985.
7. *The Surgeon General's Report on Nutrition and Health,* USDHHS (PHS) Publication No. 88-50211, 1988.
8. National Research Council, *Diet and Health: Implications for Reducing Chronic Disease Risk*, National Academy Press, Washington, DC, 1989.
9. American Cancer Society Special Report, *Nutrition and Cancer: Cause and Prevention*, American Cancer Society, 1984.
10. American Heart Association, "Dietary Guidelines for Healthy American Adults: A Statement for Physicians and Health Professionals by the Nutrition Committee, American Heart Association," *Circulation* **77**, 721A–724A (1988).
11. Institute of Medicine, *Nutrition Labeling: Issues and Directions for the 1990s*, National Academy Press, Washington, DC, 1990.
12. Public Law 1001-535.
13. J. Storlie, *Food Label Design: A Regulatory Resource Kit*, Institute of Packaging Professionals, Herndon, VA, 1996.
14. *Fed. Reg.* **58**, 2066–2956 (January 6, 1993).
15. *Fed. Reg.* **58**, 632–691 (January 6, 1993).
16. *Fed. Reg.* **68**, 41433–41506 (July 11, 2003).

General References

9 *Code of Federal Regulations*, Parts 200 to end, Superintendent of Documents, U.S. Government Printing Office, Washington, DC (for USDA food labeling regulations Title 9).

21 *Code of Federal Regulations*, Parts 1–99, 100–169, Superintendent of Documents, U.S. Government Printing Office, Washington, DC (for FDA food labeling regulations).

Food Labeling News, CRC Press, Washington, DC.

J. L. Vetter, *Food Labeling: Requirements for FDA Regulated Products*, American Institute of Banking, Manhattan, KS, 1993.

NYLON

Updated by Staff

INTRODUCTION

Nylons are selected for applications in the packaging industry mainly for their functional contributions. In general, they offer clarity, thermoformability, high strength and toughness over a broad temperature range, chemical resistance, and barrier to gases, oils, fats, and aromas. For most packaging applications, nylons are used in film form, as single components in multilayer structures (see Films, plastic; Multilayer flexible packaging). Multilayer coextruded thermoformable structures containing polyester and nylon layers have been reported (1).

Nylons, or polyamides, are thermoplastics characterized by repeating amide groups (–CONH–) in the main polymer chain. The various types of nylon differ structurally by the chain length of the aliphatic segments separating adjacent amide groups. The combination of hydrogen bonding of amide groups and crystallinity yields tough, high-melting thermoplastic materials.

Polyamides can be described as long-chain molecules with amide functionalities (–CONH–) as an integral part of the repeat unit. Film-forming nylons are usually linear and conform to either of two general structures.

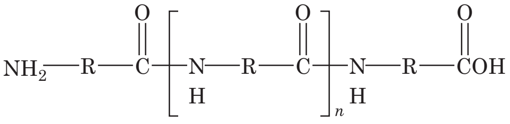

$$NH_2{-}R{-}\overset{O}{\overset{\|}{C}}{-}\left[\underset{H}{N}{-}R{-}\overset{O}{\overset{\|}{C}}\right]_n{-}\underset{H}{N}{-}R{-}\overset{O}{\overset{\|}{C}}OH$$

(1)

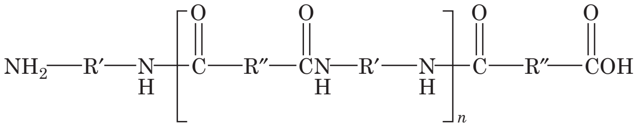

$$NH_2{-}R'{-}\underset{H}{N}{-}\left[\overset{O}{\overset{\|}{C}}{-}R''{-}\overset{O}{\overset{\|}{C}}\underset{H}{N}{-}R'{-}\underset{H}{N}\right]_n{-}\overset{O}{\overset{\|}{C}}{-}R''{-}\overset{O}{\overset{\|}{C}}OH$$

(2)

Examples of the first polymers are nylon 6 [R = $(CH_2)_5$], nylon 11 [R = $(CH_2)_{10}$], and nylon 12 [R = $(CH_2)_{11}$]. Here, the nylon type corresponds to the total number of carbon atoms in the repeat unit. Examples of the second-type nylons are nylon 6,6 [$R' = (-CH_2-)_6, R'' = (-CH_2-)_4$], and nylon 6, 10 [$R' = (-CH_2-)_6, R'' = (-CH_2-)_8$]. In the case of the second-type polymers, R′ refers to the number of methylene (CH_2) groups or carbon atoms between the nitrogen atoms and the R″ refers to the number of methylene groups or carbon atoms between the CO groups. The *n* in the formula is the degree of polymerization and its value determines the molecular weight of the polymer.

Nylons can also be prepared as copolymers. For example, a nylon 6/6, 6-copolymer might have the formula

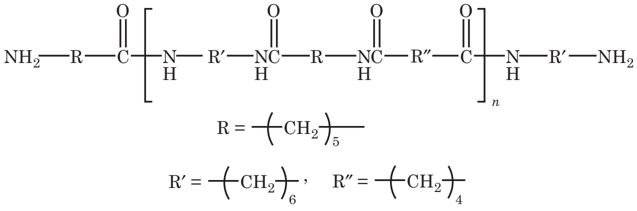

$$NH_2{-}R{-}\overset{O}{\overset{\|}{C}}{-}\left[\underset{H}{N}{-}R'{-}\underset{H}{N}\overset{O}{\overset{\|}{C}}{-}R{-}\underset{H}{N}\overset{O}{\overset{\|}{C}}{-}R''{-}\overset{O}{\overset{\|}{C}}\right]_n{-}\underset{H}{N}{-}R'{-}NH_2$$

$$R = \left(CH_2\right)_5$$

$$R' = \left(CH_2\right)_6, \quad R'' = \left(CH_2\right)_4$$

If the amounts of the nylon 6 and nylon 6,6 monomers are varied, many combinations of the comonomers are possible. This would give rise to a series of nylon 6/6,6 copolymers with different properties (2).

PROPERTIES

The flexibility of aliphatic chains permits film orientation to further enhance strength (3). As the length of the aliphatic segment increases, there is a reduction in melting point, tensile strength, water absorption, and an increase in elongation and impact strength. Copolymerization also tends to inhibit crystallization by breaking up the regular polymer chain structure and likewise yields lower melting points than the corresponding homopolymers (4). The selection of a particular nylon for an application involves consideration of specific physical requirements (mechanical properties, barrier properties, dimensional stability), processability (melting point), cost, and so on.

Recent research efforts have been focused on producing multilayer packaging films to improve their photostability and recycling. The technology of blending represents a potentially relevant new approach to barrier films with improved recyclability as compared to multilayers. Theses films are made on nylon 6 blended to ethylene-*co*-vinyl alcohol (EVOH) in the presence of carboxyl-modified EVOH (5). Due to environmental issues, increased efforts have been made in developing barrier polymers for food packaging that guarantee degradability. A potentially degradable polymer based on the modification of nylon 10/12 was reported (6). The chemical modification consisted of the replacement of two C–C linkages with two ether linkages. A remarkable effect due to the ether linkage produced an increase in water solubility and diffusivity. A pronounced increase in water permeability was detected. Nylon treated with UV light has been examined as to its antimicrobial activity. Observed activity is presumed based on the formation of surface amines (7).

Table 1 lists comparative properties of commercial nylon films.

PROCESSING METHODS

Extrusion

Nylons are melt-processable via conventional extrusion, but some parameters differ from those used in extruding other resins (see Extrusion). Since the quality of extruded film is sensitive to raw-material defects, nylon resins should be clean and free of gel particles. Selection of resin viscosity depends on use. Low-viscosity resins are used in extrusion coating to allow rapid drawdown rates, whereas medium- to high-viscosity resins are preferred for film production. Because nylons are hygroscopic, special care is required to ensure sufficiently low water content (<0.10 wt%) for the extrusion process. Unless properly packaged and stored, nylon resins absorb moisture from the atmosphere and inevitably pose processing difficulties (8). In any extrusion operation, continuous production of uniform-quality film as well as maintenance of a safe work environment is best achieved by monitoring and tightly controlling all machine variables (temperatures, head pressure, extruder drive load, screw rpm, etc.) (9, 10).

Many film converters have been successful in producing nylon film on conventional polyethylene extruders, making only small modifications. The most important factors to consider are temperature control and screw design. The extruder must be equipped with adequate heaters for the required processing temperatures (9). In addition to heating capability, temperature control should permit little fluctuation ($\pm 3^\circ$C) to ensure delivery of a proper and consistent melt. Typical temperature profiles are shown in Table 2.

Although a variety of screws have been used successfully for processing nylon resins, not all screws are optimum for the nylon being processed. In general, a nylon screw is thought of as a rapid-transition metering-type screw. A compression ratio (volume of a feed flight relative to the volume of a metering flight) of 3:1 to 4:1 is acceptable for most nylons. Most nylon screws are 40% metering, 3–4 turns transition, and the remainder feed zone. Length to diameter ($L:D$) ratios of 20:1 and 24:1 are common and acceptable. In designing a screw for a specific nylon, factors that must be considered include melting point of the resin, melt viscosity characteristics, machine type, extrusion rate, and so on (8).

Film Manufacture

Nylon film can be produced by either the cast-film process or the blown-film process. Semicrystalline polymers like the nylons can be made “amorphous” by rapidly quenching the melt via the cast-film process. That is, the polymer chains are prevented from aligning and organizing into regular, three-dimensional “crystalline” structures. Thus, by varying quenching rates, nylons are capable of existing in a low-order or amorphous state and in a highly crystalline state. The properties of the final film are highly dependent on the crystalline state of the polymer. By a rapidly quenching the melt, favorable properties of transparency and thermoformability are induced.

In producing nylon film by the blown-film process, the cooling rate is much slower than for the cast-film process: The film is allowed to crystallize and film clarity is generally sacrificed. Blown films are used in applications requiring tubular film, or films of higher strength or better gas-barrier properties than yielded by the cast process. A chrome-plated bottom-fed die with a spiral mandrel is generally recommended for blown-film processing to minimize weld lines and polymer degradation due to stagnant hold-up of melt in the die. Because of their stiffness, nylons pose wrinkling problems in the bubble-collapsing phase of production. Special care is required to properly align the collapsing frame and nip rolls, minimize gauge variations, and limit drag force in the collapsing assembly. It has been suggested that the lower-density nylons show less-severe wrinkling problems (8).

Oriented Nylon Films

The high strength and toughness properties of nylon films can be further enhanced by orientation. The increased alignment and tighter packing of polymer chains resulting from the process also yields improved barrier properties. Table 3 lists property comparisons for unoriented versus biaxially oriented films. Preferential orientation, typically machine direction, improves strength and toughness in

Table 1. Properties of 1-mil (254.4-μm) Nylon Films

			Value				
Property	ASTM Test		Nylon 6	Nylon 6,6	Nylon 6/6,6	Nylon 6/12	Nylon 6, Biaxially Oriented
Melting point, °F (°C)			424–428 (218–220)	510 (266)	388–395 (198–202)	386–392 (197–200)	424–428 (218–220)
Specific gravity	D1505		1.13	1.14	1.11	1.10	1.15
Yield, in.^{2}/(lb · mil) [m^2/(kg · mm)]			24,500 [1,372]	24,300 [1,361]	25,000 [1,400]	25,200 [1,411]	24,000 [1,344]
Haze, %	D1003		1.5–4.5	1.5	2.0		1.3
Light transmission, %							
Tensile strength, psi (MPa) MD	D882 12,000 (82.8)		9,000 (62.1)	16,000 (110.3)	4,640 (32.0)	32,000 (220.7)	
		XD	10,000 (69.0)	9,000 (62.1)	16,000 (110.3)	4,500 (31.0)	32,000 (220.7)
Elongation, %	D882						
		MD	400	300	400	400	90
		XD	500	300	400	500	90
Tensile modulus, 1% secant, psi (MPa)		MD	100,000 (689.7)	100,000 (689.7)	100,000 (689.7)		250,000 (1724.1)
		XD	115,000 (793.1)	100,000 (689.7)	100,000 (689.7)		250,000 (1724.1)
Tear strength, gf/mil (N/mm) initial propagating	D1004 D1922		500 (193) 35 (13.5)	600 (232) 35 (13.5)	500 (193) 70 (27)		200 (77.2) 10 (3.9)
Bursting strength, 1 mil (25.4 μm), psi (kPa)	D774		Does not burst, 10–18 (69–124)	18 (124)			
Water absorption, 24 h, %	D570		9	8	9	3	7–9
Folding endurance cycles	D2176		$>$250,000				
Change in linear dimensions at 212°F (100°C) for 30 min, %	D1204		$<$2		1		$<$2.5
Service temperature, °F (°C) range			−50–250 (−46–121)	−100–450 (−73–232)	−50–240 (−46–116)		−76–266 (−60–130)
Heat-seal temperature, °F (°C) range			410–420 (210–216)	490–500 (254–260)	375–385 (191–196)	360–375 (182–191)	410–420 (210–216)
Oxygen permeability cm^3 · mil/(100 in.^{2} · day · atm) [cm^3 · μm/(m^2 · day · kPa)]	D1434						
23°C, 0% rh			2.6 [10.1]	3.5 [13.6]		2.0 [7.8]	1.2 [4.7]
23°C, 50% rh					5.0 [19.4]		
23°C, 95% rh			3.5 [13.6]	16.0 [62.2]		2.2 [8.5]	3.5 [13.6]
Water-vapor transmission rate, g · mil/100 in^2 · day) [g · mm/(m^2 · day)], 100°F (38°C), 90% rh			18 [7.1]	19 [7.5]	31 [12.2]	7 [2.8]	17 [6.7]
COF, face-to-face back-to-back	D1894		0.25–0.65	0.45			

Table 2. Typical Temperature Profiles for Nylon Extrusion, °F(°C)

	Nylon 6	Nylon 6,6	Nylon 6/6,6[a]
Feed zone	446–482 (230–250)	500–554 (260–290)	401–464 (205–240)
Transition zone	437–500 (225–260)	500–545 (260–285)	401–482 (205–250)
Metering zone	396–527 (220–275)	500–545 (260–285)	392–491 (200–255)
Head	437–518 (225–270)	500–545 (260–285)	401–482 (205–250)
Die	419–518 (215–270)	494–563 (255–295)	392–482 (200–250)
Melt temperature	437–518 (225–270)	500–512 (260–300)	401–482 (205–250)

[a] Nylon 6/6,6 temperature profile reported by Allied Corporation for XTRAFORM resin.

the direction of orientation. Biaxial orientation yields films with balanced properties. Market development efforts in this area are concentrated on critical packaging applications requiring soft films that permit tight package conformation and offer improved impact strength and reduced pinholing, superior burst strength, and flexcrack resistance. As with most other flexible substrates, oriented films permit further conversion, (e.g., printing, lamination, metallization, etc.).

Three processes are used to manufacture biaxially oriented nylon film.

One-Step Tenter Frame. This process simultaneously draws cast nylon film in both the machine and transverse direction (11).

Two-Step Tenter Frame. This is a two-step orientation process in which a nylon film that has been modified with a plasticizer is first drawn in the machine direction and then drawn in the transverse direction (12).

Blown Bubble. Nylon film extruded from a circular die is oriented in the transverse direction by controlled internal air pressure, and it is also oriented in the machine direction by regulating the bubble takeoff speed (13).

Coextrusion

Nylons used in film extrusion are often combined with other plastic materials via coextrusion. In most cases, polyolefins are used as coextrusion partners for nylon to provide heat sealability, moisture barrier, and good economics. As in single-layer-film extrusion, nylons can be processed by cast-film coextrusion and by blown-film coextrusion (see Coextrusion, tubular). The combining-adapter technology is generally the preferred method for joining layers in cast film coextrusion of nylon, although multimanifold-die systems are also used. Special care in matching resin viscosities is required when using the combining-adapter system in order to produce films of uniform layer profile. For both systems, nylon 6 is the most common and preferred polyamide used in cast film coextrusion.

Because the blown-film coextrusion process employs air as the cooling medium, the melt is cooled slowly, permitting spherulite formation in semicrystalline nylon homopolymers (i.e., nylon 6, nylon 6,6) and film transparency is sacrificed. For this reason, less-crystalline nylon copolymers such as nylon 6/12 and nylon 6/6,6 are gaining acceptance in blown-film coextrusion.

Applications for nylon/polyolefin coextruded films include vacuum packaging of meat products, cheese-

Table 3. Comparative Properties of Unoriented, Uniaxially Oriented (MD), and Biaxially Oriented Nylon-6 Films (1-mil or 25.4-μm Films)

		Values		
Property		Nylon 6 film, Unoriented	Nylon 6 film, MD-Oriented	Nylon 6 Film, Biaxially Oriented
Specific gravity		1.13	1.14	1.15
Tensile strength, psi (MPa)	MD	12,000 (82.8)	50,000 (344.8)	32,000 (220.7)
	XD	10,000 (69.0)	10,000 (69.0)	32,000 (220.7)
Elongation, %	MD	400	60	90
	XD	500	450	90
Tensile modulus psi (MPa)	MD	100,000 (689.7)	300,000 (2069)	250,000 (1724.1)
	XD	115,000 (793.1)	100,000 (689.7)	250,000 (1724.1)
Initial tear strength, gf/mil (N/mm)	MD	500 (193)	650 (251)	200 (77.2)
	XD	500 (193)	1,300 (502)	200 (77.2)
Propagating tear strength, gf/mil (N/mm)	MD	35 (13.5)	40 (15.4)	10 (3.9)
	XD	35 (13.5)	100 (38.6)	10 (3.9)
Oxygen permeability, [$cm^3 \cdot \mu m/(m^2 \cdot day \cdot kPa)$] $cm^3 \cdot \mu m/(100 \cdot in.^2 \cdot d \cdot atm)$		2.6 [10.1]	2.4 [9.3]	1.2 [4.7]
WVTR, $g \cdot mil/(100 \cdot in.^2 \cdot day)$ [$g \cdot mm/(m^2 \cdot day)$]		18 [7.1]	18 [7.1]	17 [6.7]

ripening pouches, consumer packaging of cheese and fish products, and several nonfood packaging applications including containers for chemicals, fertilizers, and animal foods.

Extrusion Coating

Nylons with lower viscosity permit rapid drawdown rates for extrusion coating (see Extrusion coating). Typical substrates range from heavy-duty paperboard to intermediate aluminum foils and papers, to thin polyethylene films. Published literature describes the nylon extrusion coating process in detail (8, 14). As in cast-film production, annealing the nylon coating is necessary to impart dimensional stability when a flexible substrate is used.

Blow Molding

Nylons of ultrahigh viscosity are commonly used in blow molding (see Blow molding). Because of their excellent impact strength, chemical resistance, toughness, and wide temperature use properties, nylons are ideally suited for several blow-molded applications, including industrial containers, moped fuel tanks, and automotive oil reservoirs. A recent development for nylon in blow molding has been in the area of blow-molded hydrocarbon-barrier containers. The process employs a blend of a modified nylon barrier resin and a polyolefin, extrusion blow molded under controlled mixing conditions to produce a barrier container competitive with surface-treated HDPE bottles (3, 4, 14). Packaging applications include containers for charcoal lighter fluids, general-purpose cleaners, waxes, polishes (see Surface modification) and those described in several patents (15).

Secondary Conversion

Thermoforming. Nylon films are readily thermoformed by conventional methods (see Thermoforming.) Ease of formability is affected by nylon type (melting point), molecular weight, degree of crystallinity, and machine variables. In general, nylon films offer excellent thermoformability due to their high elongation. Furthermore, the high elongation facilitates deep draw, and flex- and stress-crack resistance of nylons minimize film breaks during and after forming. Current applications include (a) vacuum and gas packaging of meats and cheeses and (b) thermoform/fill/seal packaging of disposable medical devices (see Controlled Atmosphere Packaging; Healthcare packaging; Thermoform/fill/seal.)

Heat Sealing. Because of their high melting points, nylons are typically coextruded with, laminated to, or coated with a polyolefin heat seal layer (PE, EVA, EAA, ionomer, etc.). However, unsupported nylon films are heat sealed for applications that require heat-seal integrity under high-temperature exposure (e.g., oven “cook-in” bags). By properly balancing the variables of time, temperature, and pressure, unsupported nylons can be heat-sealed at relatively low temperatures. For most commercial applications, however, it is necessary to heat the films to temperatures that closely approach their melting points. This factor, compounded by the relatively narrow melting range of nylons, necessitates precise temperature (±3°C) and pressure control. By making necessary modifications to conventional machinery, nylons are successfully heat-sealed by thermal impulse and constant-heat techniques.

Adhesive Lamination. Nylon films are combined with other flexible materials via adhesive lamination to produce multiple structures, each ply contributing to the requirements of the end product (see Laminating; Multilayer flexible packaging). Typical substrates include sealant webs (PE, EVA, ionomer, etc.), and aluminum foils. Converters may choose to laminate rather than coextrude nylon to minimize scrap losses for short runs. Lamination is also necessary when combining non-coextrudable or incompatible plastics. The lamination process is described in detail in published literature (16). The adhesive is generally applied to the nylon web which has been corona treated (see Surface modification) to assist wettability, as the high melting point of nylon provides suitable stability in solvent-drying ovens. Adhesive systems are typically two-component types that vary for nylon types and substrates. Nylon film suppliers recommend adhesives for specific substrates (see Adhesives).

Vacuum Metallizing. Applications for metallized oriented nylon films are expanding in the packaging industry. Metallization offers functional contributions of improved moisture, oxygen, and light barriers and unique aesthetic appeal at the consumer level (17). The resultant film offers excellent flexibility, oxygen barrier, flex-crack resistance, antistatic properties, and printability. These properties meet the necessary requirements for use in such applications as institutional coffee pouches, metallized balloons, and liquid-box containers (see Bag-in-box, liquid product; Metallizing).

PACKAGING APPLICATIONS

Although nylons are not generally considered commodity-packaging resins, the added material cost is easily justified in specific demanding applications where the nylons’ physical properties provide added protection, extended shelf life, or reduced losses of expensive contents. The combination of excellent thermoformability, flexcrack resistance, abrasion resistance, gas-, grease-, and odor-barrier, and tensile-, burst-and impact-strength over a broad temperature range make nylons well suited for many packaging applications. For most applications, nylons are combined with other materials that add moisture barrier and heat sealability, such as low-density polyethylene, ionomer, EVA, and EAA.

Most nylon-containing packaging films are used in food packaging, principally in vacuum-packing bacon, cheese, bologna, hot dogs, and other processed meats (18). A variation of this package includes a carbon dioxide flush prior to heat sealing to remove traces of oxygen, thus prolonging shelf life for foods such as poultry, fish, and fresh meat (19). Poly(vinylidene chloride) (PVDC) coatings are offered for improved oxygen-, moisture vapor-, or UV light-barrier properties (see Vinylidene chloride copolymers).

Nylon 6 is the nylon resin used most frequently for packaging applications because of the balance of cost, physical properties, and process adaptability. For blown or cast extrusion as well as cast coextrusion, nylon 6 resins are favored by most converters, while lower-melting nylon copolymers (nylon 6/6,6 or nylon 6/12) have been developed primarily to aid blown-film coextruders (lower melting points permit lower process temperatures for faster melt quenching). In addition to lower melting points, the nylon copolymers are less crystalline than their corresponding homopolymers and provide better clarity and thermoformability. On the high end of the melting-point scale, nylon 6 and nylon 6,6 resins are appropriate for use in oven-cooking bags, where high-temperature tolerance is a key requirement. A ready-to-bake fish fillet product is possible using an ovenproof film of nylon 6,6 for packaging during storage (20).

Medical-packaging applications, such as packaging of hypodermics and other medical devices, are a relatively new and expanding area for the nylons. The combination of toughness, puncture resistance, impact strength, abrasion resistance, and temperature stability make nylons appropriate for protecting sterile devices during shipping and storage. Although ethylene oxide and steam have always been appropriate means of sterilization for nylons, modified-nylon resins have recently been introduced that permit radiation sterilization as well (21).

Biaxial orientation of nylon films provides improved flex-crack resistance, mechanical properties, and barrier properties. These films have new applications in packaging foods such as processed and natural cheese, fresh and processed meats, condiments, and frozen foods. They are used in pouches, in bag-in-box structures, and in a box for wine (22) (see Bag-in-box, dry product; Bag-in-box, liquid product). In other areas (e.g., cooked meats, roasted peanuts, smoked fish) the nylons compete with biaxially oriented polyester (see Film, oriented polyester). Although oriented nylons offer better gas barrier, softness, and puncture resistance, oriented polyester offers better rigidity and moisture barrier.

Other uses for nylon film include a nylon-6 shrink film (see Films, shrink) for meat and fresh-vegetable packaging (23), a nylon composite film used in a system to produce greaseless fried chicken (24), a uniaxially oriented nylon-6 film for food packaging (25), a nylon-6 film with improved thermoformability (26), and a nylon film as an outer protective layer for aluminum foil in cookie and vacuum coffee packages (22). Laminated structures containing nylon provide an oxygen barrier for packaging liquid and dry products. These structures are used for packaging fruits, citrus juices, tea, and other beverages (27).

BIBLIOGRAPHY

M. F. Tubridy and J. P. Sibilia,“Nylon” in *The Wiley Encyclopedia of Packaging*, 1st edition, Wiley, New York, pp. 477–482; 2nd edition, pp. 681–686.

Cited Publications

1. A. J. Lischefski, U.S. Patent 7,201,966 (to Curwood Inc.), April 10, 2007.
2. Y. P. Khanna, E. A. Turi, S. M. Aharoni, and T. Largman, U.S. Patent 4,417,032 (to Allied Corporation), November 22, 1983.
3. R. D. Deanin, *Polymer Structure, Properties and Applications*, Cahners Books, Division of Cahners Publishing Company, Boston, 1972, pp. 455–456.
4. K. J. Saunders, *Organic Polymer Chemistry*, Chapman and Hall London, 1976, pp. 175–202.
5. P. Laurienzi, M. Malinconico, M. G. Volpe, D. Luongo, V. Ranieri, and M. Scopini, *Packag. Technol. Sci.* **14**, 109–117 (2001).
6. M. A. DelNobile, G. Mensitieri, L. R. Lostocco, S. J. Huang, and L. Nicolais, *Packag. Technol. Sci.* **10**, 331–330 (1997).
7. *Packag. Technol. Sci.* **20**, 231–273 (2007).
8. R. M. Bonner, “Extrusion of Nylons” in M. I. Kohan, ed., *Nylon Plastics*, Wiley, New York, 1973.
9. E. C. Bernhardt, *Processing of Thermoplastic Materials*, Reinhold, New York, 1959.
10. J. M. McKelvey, *Polymer Processing*, Wiley, New York, 1962.
11. M. Kuga and co-workers, U.S. Patent 3,794,547 (to Unitika, Ltd.), February 26, 1974.
12. U.S. Patent 26,340 (reissued August 2, 1977), K. Khisha (Original); U.S. Patent 3,843,479 (October 24, 1974), I. Hayashi and K. Matsunumi (to Toyo Boseki, Ltd.)
13. K. Tsuboshima and co-workers, U.S. Patent 3,499,064 (to Kohjin Co., Ltd.), March 3, 1970.
14. S. M. Weiss, in J. Abranoff, ed., *Modern Plastics Encyclopedia*, Vol. 16, No. 10, McGraw-Hill Publications, New York, 1984, pp. 199–202.
15. P. M. Subramanian, U.S. Patent 4,410,482, October 18, 1983; R. C. Di Luccio, U.S. Patent 4,416,942, November 22, 1983; P. M. Subramanian, U.S. Patent 4,444,817, April 24, 1984.
16. J. A. Pasquale, in J. Agranoff, ed., *Modern Plastics Encyclopedia*, Vol. 61, No. 10, McGraw-Hill Publications, New York, 1984. pp. 284–286.
17. W. Goldie, *Metallic Coating of Plastics*, Electrochemical Publications Ltd., Hatch End, Middlesex, 1969.
18. E. C. Lupton, *Modern Packag.* **52**(12), 26 (1979).
19. J. A Dorado-Rodelo, J. M. Ezquerra, and H. Soto-Veldez, *Packag. Technol. Sci.* **20,** 301–307 (2006).
20. K. Pomolpraser in J. Han, ed., *Packaging for Nonthermal Processing of Food,* Blackwell, and the Institute of Food Technologists, 2007, Chapter 6.
21. Allied Corporation, *Modern Plast.* **60**(9), 114, 119 (1983).
22. “Packaging, Food,” in *Kirk–Othmer Encyclopedia of Chemical Technology,* 5th edition, Vol. 18, Wiley Interscience, Hoboken, NJ, 2006.
23. *Plast. Ind. News* **29**(10), 148 (1983).
24. *Food & Drug Packag.* **46**(12), 30 (1982).
25. *J. Commerce* **353**(25,263), 22B (1982); *Plastics World* **40**(8), 76 (1982).
26. *J. Commerce* **345**(24,747), 5 (1980).
27. T. S. Reighard, U.S. Patent Application 20070184221, August 9, 2007.

General Reference

M. I. Kohan, *Nylon Plastics Handbook*, Carl Hanser Verlag, Munich, Germany 1995. An excellent reference book covering all aspects of nylon technology.

O

OFF-ODORS PACKAGING

Gregory V. Pace
Sun Chemical Corporation, and
Department of Food Science
Graduate Program,
Rutgers University

Thomas G. Hartman
School of Environmental and
Biological Sciences
Department of Food Science,
Rutgers University

INTRODUCTION

Off-odor and off-flavor compounds that are responsible for the sensory response are detected by the taste and olfactory systems. The challenge for analytical instrumentation is to detect and identify those compounds most responsible for the off-odor or off-flavor. This task is further complicated by the fact that the compounds with the highest sensory response have very low odor thresholds. That is, they can be present at part per million (ppm) or part per billion (ppb) levels. The analytical methodology must be able to separate, identify, and quantitate these off-odor compounds at very low levels in the package.

Since the 1970s, there have been excellent advances in the instrumentation, experimentation, interpretation, and application of measurement techniques, that have increased the separation and lowered the detection limit of compounds that have low odor thresholds and high human sensory response. Much of the off-odor references for investigation are derived from the flavor and aroma chemistry field, in which the analytical methodology has been centered on isolation and identification of the volatile compounds known to give the organoleptic human response. Because of their volatility, these compounds are predominantly analyzed by some form of gas chromatography (GC). Capillary GC can be tailored to give the separation and sensitivity needed for the analysis of off-odor compounds. It is easily amenable to various sample introduction techniques, and specific, universal, or confirmatory detectors.

ANALYTICAL INSTRUMENTATION FOR DETERMINING THE CHEMICAL COMPOSTION OFF-ODOR COMPOUNDS

Gas chromatography (GC) is the separation of a mixture of compounds that are put into the vapor state, carried through a chemically coated column, selectively separated based on a physical or chemical property, and identified with a specific detector. GC was developed using a packed metal column of about 2 m, with a stationary support that was coated with a nonvolatile liquid phase. It is now predominately performed with high-resolution GC (HRGC), using capillary columns ranging from 15 to 100 m long. The type of GC detectors most often employed in aroma and flavor analyses are; flame ionization detector (FID); mass spectrometry—full scan (or total ion) mode MS-TIC; mass spectrometry in selective ion monitoring mode (MS-SIM); GC—olfactometry (GC-O). The selection of the detector depends on the complexity of the volatile mixture being separated, the properties of the compounds in the mixture, and the levels at which those analytes of sensory response interest exist.

The methodology chosen for off-odor and off-flavor compound isolation is a critical step in ensuring that the entire mixtures that cause the sensory response are analyzed. Solid-phase extractions (SPE) and SP-micro-extraction (SPME), headspace (HS) extractions, thermal desorption (TD), and purge and trap (P&T) are common techniques employed to facilitate the extraction of the compounds and then analyzed by the GC instrumental system.

Gas Chromatography—Olfactory (GC-O)

Gas chromatography—olfactometry (GC-O) is a true hyphenated analytical and sensory technique. It is widely applied to confirm the actual olfactometric property of a suspected off-odor, off-flavor, or off-aroma compound. The isolated mixture is injected into a GC, the compounds in the mixtures are separated, and the effluent vapors from the column are usually split to an instrumental detector and a sniff port (Figure 1). The sniff port is conditioned with humidified air to protect the nasal passages of the analyst (or panelist) and the vapor compounds separated from the mixture by the column elute out of the sniff port and are detected by the human nose. An electronic signal is generated by the analyst

Figure 1. Gas Chromatograph equipped with a sniff port.

upon detection of the odor. A descriptor is also recorded for each compound. The final olfactogram is reconstructed by averaging the individual olfactograms of the replicate samples, identifying the odor-active compounds in the odorant areas (1). GC-O was successfully used in conjunction with triangle tests to determine the effects of oxidation of critical flavor active compounds during wine processing (4).

Gas Chromatography–Flame Ionization Detector (FID)

GC-FID is the most widely used GC system in many different environments from production quality control to fragrance research. There is an abundance of published literature and application notes using this technique in a wide variety of fields where the analysis of volatile compounds is important (e.g., environmental, petroleum, industrial solvents, food packaging, flavors and fragrances). The identification of a compound is based on the retention time on a particular column, compared to a known standard. They can also be compared to a series of n-paraffin hydrocarbons, which determines their retention index (RI). This comparative retention index of a compound allows comparison with different instrument configurations to published data, as was done in the wine research of Le Fur et al. (1). In the wine industry, GC-FID is used in conjunction with GC-MS to quantitate the chemical composition of the volatile aroma compounds in foods (2, 3). The GC-FID is also commonly used in-line concurrently with GC-O, where the column effluent is split to the FID and sniff port at the same time (5). These techniques used in the food and wine industry have been adapted to off-odor analysis by the authors of this article.

Gas Chromatography–Mass Spectrometry (GC-MS)

The improvement of the mass spectrometer since the 1980s has made it readily available to a wide variety of industries. It is the most appropriate analytical tool to enable the detection, identification, and quantitation of flavor aroma active compounds with odor thresholds in the very low ppb range. The utility of the MS is in its generation of a third dimension of the mass spectral identification to the chromatographic separation of column retention time in the column and response at the detector. There are many examples in the literature search for the utilization of GC-MS in the confirmation and identification of sensory significant compounds (1–8). The ability to generate a mass spectrum that is consistent and predictable to the chemical structure has led to large ($>$500,000 compounds) commercial databases of compounds that can be used to search and identify unknowns. The specific GC–mass spectrum of the individual off-odor and off-flavor compounds allows for their detection, identification, and quantitation at ppm or very low ppb levels (2).

Static Headspace Gas Chromatography–Mass Spectrometry (HS-GC-MS)

Static HS-GC-MS is used to obtain an overview of the volatile aroma compound mixtures. It is the simplest of the volatilization techniques, reproducing the natural volatilization of the aroma and flavor compounds in the sample. A liquid sample is heated in a closed container, and the volatile mixture of compounds present in the headspace above the liquid is sampled and analyzed by GC-MS. This technique is effectively used in food packaging and wine profiling to compare acceptable and unacceptable samples (i.e., off-odor and off-flavor). Its limitation is that the concentration of some off-odor or off-flavor compounds with very low odor thresholds are at levels below the detection limit of this method (i.e., ppb). The instrumentation available on the market allows for automated sampling of up to 100 samples, facilitating analysis of replicate samples to generate statistical significance of the results.

Purge and Trap Gas Chromatography–Mass Spectrometry (P&T-GC-MS)

Purge and trap (P&T) is a dynamic headspace volatile concentration technique. The volatiles are purged from the sample and trapped on an absorbent material (i.e., Tenax™). P&T is also used to prepare samples for concentrated GC-O (1) analysis. The trapped volatile compounds are then desorbed into the GC-MS, and the mixture is separated by the GC column and identified using the MS. P&T has been mostly done off-line, where the volatiles are trapped onto an absorbent material (i.e., Tenax). The trap is then installed onto a desorption apparatus, which sits over the injection port of the GC-MS, and the volatiles are desorbed at high heat (e.g., 300°C) and analyzed. P&T was used as a sample preparation on many of the experiments performed in the author's laboratories.

Thermal Desorption–Gas Chromatography–Mass Spectrometry (TD-GC-MS)

Thermal desorption (Figure 2) can be used to extract trapped volatiles that have been captured onto a chemical trap, as stated above in P&T-GC-MS. It has been used for the identification of off-flavors from food packaging materials (9). One way it is used is by trapping the outgassed volatiles P&T, which are then desorbed into the injection port of the GC-MS or GC-O (1). Another approach used is by direct thermal analysis (TA-GC-MS) of the plastic polymer film used for the food packaging, to release trapped off-odor compounds from the polymer matrix (11, 12). In that work by one of the authors, the cause of an off-odor in a polypropylene food packaging made from recycled resins was determined. Two compounds out of 175 chromatographic peaks were identified as the most organoleptic significant.

Electronic Gas Sensor Array (Electronic Nose)

The electronic nose (e-nose) is a measurement device that combines chemical sensing with electronic processing. Two of the most popular designs of e-nose sensors used in flavors and aromas are based on a conductive organic polymer sensor array and piezoelectric gas sensor. In the conductive organic polymer sensor array, the polymers swell to different degrees upon response to a volatile compound, changing their resistance. The resistance patterns of the array of

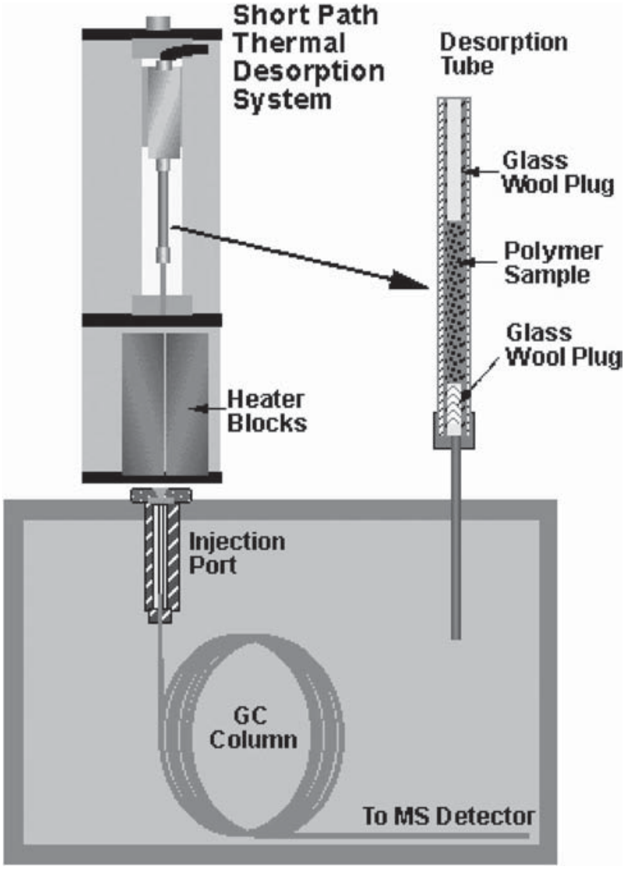

Figure 2. Thermal Desorption/Analysis System.

polymers are unique for each type of compound. The pattern display resembles the cross fiber pattern theory of taste, although the response mechanism is much different. The signal pattern generated by the e-nose sensor are downloaded to a chip (for handheld models), and also analyzed by computer. To be successfully applied, it is critical that the e-nose is "trained" with the compounds and volatiles of interest. This sensor was used in food quality control (6). It was shown that once the e-nose is trained with the standard, it is successful in detecting deviations and changes. The e-nose's portability make it an excellent in-line production screening tool, capable of identifying foods that fall outside of the calibrated, acceptable range. Another type of e-nose made from a piezoelectric gas sensor was applied to record and reproduce the odor of citrus to manufacture artificial citrus flavors (10). The array output pattern from the sensor was compared to the ten essential citrus oil standards. The multi-component mixtures were treated as single components, allowing successful duplication of typical orange flavor. The e-nose can be trained to identify if a food or package is different that the standard, but is less capable to identify and quantitate an off-odor or off-flavor compound as well as GC-MS.

REFERENCES

1. Y. Le Fur, V. Mercurio, L. Moio, J. Blanquet, and J. M. Meunier, A New Approach to Examine the Relationships Between Sensory and Gas Chromatography–Olfactometry Data Using Generalized Procrustes Analysis Applied to Six French Chardonnay Wines. *J. Agric. Food Chem.* **51**(2), 443–452 (2003).
2. M. Aznar, R. Lopez, J. Cacho, and V Ferreira, Prediction of Aged Red Wine Aroma Properties from Aroma Chemical Composition. Partial Least Squares Regression Models. *J. Agric. Food Chem.* **51**(9), 2700–2707 (2003).
3. M. Bucking and H. Steinhart, Headspace GC and Sensory Analysis Characterization of the Influence of Different Milk Additives on the Flavor Release of Coffee Beverages. *J. Agric. Food Chem.* **50**(6), 1529–1534 (2002).
4. A. Escudero and P. Etievant, Effect of Antioxidants on the Flavor Characteristics and the Gas Chromatography/Olfactometry Profiles of Champagne Extracts. *J. Agric. Food Chem.* **47**(8), 3303–3308 (1999).
5. C. Berger, N. Martin, S. Collin, L. Gijs, J. A. Khan, G. Piraprez, H. E. Spinnler, and E. N. Vulfson, Combinatorial Approach to Flavor Analysis. 2. Olfactory Investigation of a Library of *S*-methyl thioesters and sensory evaluation of Selected Components. *J. Agric. Food Chem.* **47**(8), 3274–3279 (1999).
6. R. Desrochers, P. Keane, S. Ellis, and K. Dowell, "Expanding the Sensitivity of Conventional Analytical Techniques in Quality Control Using Sensory Technology," *Food Qual. Pref.* **13**, 397–407 (2002).
7. T. Aishima, Correlating Sensory Attributes to Gas Chromatography–Mass Spectrometry Profiles and e-Nose Responses Using Partial Least Squares Regression Analysis. *J. Chromatogr. A* **1054**(1–2), 39–46 (2004).
8. S. J. Lee and A. C. Noble, "Characterization of Odor–Active Compounds in Californian Chardonnay Wines Using GC–Olfactometry and GC–Mass Spectrometry," *J. Agric. Food Chem.* **51**(27), 8036–8044 (2003).
9. M. Huber, J. Ruiz, and F. Chastellain, "Off-Flavour Release from Packaging Materials and Its Prevention: A Foods Company's Approach," *Food Addit. Contam.* **19**(Suppl), 221–228 (2002).
10. M. Hirschfelder, A. Forster, S. Kuhne, J. Langbehn, W. Junghanns, F. G. Pank, and D. Hanrieder, Using Multivariate Statistics to Predict Sensory Quality of Marjoram from Instrumental Data. Sensors and Actuators B: Chemical **69**(3), 404–409 (2000).
11. T. Hartman, Determination of Off-Odors and Other Volatile Organics in Food Packaging Films by Direct Thermal Analysis-GC-MS, Scientific Instrument Services Application Note 1a, updated 1999, CAFT/New Jersey Agricultural Experimental Station Publication # E-10570-1-90.
12. J. Manura, "Detection and Identification of Volatile and Semi-Volatile Organics in Synthetic Polymers Used in Food and Pharmaceutical Packaging," *LC/GC* **11**(2), 140–146 (1993).

OXYGEN SCAVENGERS

STANISLAV E. SOLOVYOV
Multisorb Technologies, Inc.,
Buffalo, New York

Oxygen scavengers comprise the most commercially important subcategory in active packaging applications and are a part of a much broader category of absorbers or sorbent materials for gases, vapors, liquids, and volatile organic compounds. Depending on their physicochemical nature, such absorbers can either reversibly or irreversibly remove an undesirable gaseous or liquid species from environments contained within a package. Common reversible absorption processes include physical adsorption of gas molecules to solid surfaces, bulk dissolution, and molecular diffusion of mobile species in solids and liquids. Mobile species absorbers, whose action is irreversible at the conditions of use, are generally referred to as scavengers of such species. Irreversible absorption (scavenging) generally proceeds via chemical reactions of the mobile species with the components of a scavenger system to form stable compounds. Oxygen scavenging processes include, for example: oxygen chemisorption, catalyzed oxidation of hydrogen gas to form water: catalyzed oxidation of ethylenically unsaturated hydrocarbons and organic polymers to aldehydes, ketones, and carboxylic acids; and oxidation of reduced transition metals to form stable oxides.

Molecular oxygen (O_2) is a highly reactive diatomic gas that forms about 20.9% of the earth atmopshere (1) and is necessary for sustaining organic lifeforms, but at the same time it causes many types of food and beverage spoilage, degradation of pharmaceutical formulations, and oxidation and corrosion of metals, electronic components, and various other products. Internal volume of any package is necessarily limited and contains a limited amount of oxygen; therefore it is possible to reduce or essentially eliminate the oxygen present inside the package by using oxygen scavengers. In food packaging, removal of oxygen trapped inside the package allows us to control aerobic microorganisms such as mold and many bacteria, slow down enzymatic activity, and reduce detrimental color and flavor changes due to oxidative deterioration (2, 3). The use of individually packaged oxygen scavenger formats, which are inserted in a package but do not form a part of food formulations, also allows food processors to reduce or eliminate less desirable direct food additives such as antioxidants and preservatives.

Individually packaged oxygen scavengers are produced in the form of packets or sachets containing a sacrificial compound that is formulated to rapidly oxidize and thereby eliminate free oxygen by chemically binding with it before it reacts with the packaged product (4). In addition to sachets, oxygen-scavenging internal labels applied with pressure-sensitive adhesive backings and oxygen-scavenging liners in bottle caps and crowns are marketed. Oxygen-scavenging polymeric films that appeared in the early 1990s allow us to eliminate loose sachets from the package and add an oxygen-scavenging functionality to the entire packaging structure or its part. The resulting hermetically sealed packages have a dual function, simultaneously providing for oxygen removal from the package interior and preventing ingress of atmospheric oxygen through otherwise permeable container walls by forming a reactive barrier to oxygen permeation. Applications of reactive barrier technology include oxygen scavenging plastic bottles for beer, juices, ketchup, and so on, pharmaceutical blister packs, plastic lidstocks, and thermoformed food trays.

The majority of all oxygen scavengers in commercial use are based on the oxidation of iron powders, although systems based on other oxidizable transition metals such as copper, zinc, magnesium, manganese, aluminum, titanium, and so on, have been proposed and patented. In recent years, multiple patents have been issued, describing organic oxygen scavenging chemistries with and without use of metal-based oxidation catalysts, specifically for the use as active barriers in plastic packaging applications. In this case the low oxygen permeability of polymer matrix is combined with high reactivity and substantial reactive capacity of oxidizable substrate to create an efficient and long-lasting active barrier to oxygen permeation (5). Organic oxygen scavengers are often preferable due to their transparency and compatibility with polymeric matrices that make it possible to produce optically clear oxygen barrier films and structures. Several formulations have been claimed as having zero effective oxygen transmission rates through the reactive barrier films for periods ranging from 1 to 3 months up to 2 years, thus outperforming glass packaging with essentially permeable seals and closures. In such cases the essentially zero oxygen transmission rates are achieved for reactive barrier systems characterized by a high degree of diffusion control of the overall forward rate of oxygen scavenging reaction. Diffusion-controlled reactions refer to the reactions of dissolved oxygen with the scavenging agent immobilized in a solid matrix, where the rate of oxygen removal by the reaction is much faster than the rate of oxygen diffusion through the solid matrix of the barrier layer (6).

Performance and packaging requirements to enclosed oxygen savengers differ substantially from those for reactive barrier applications. Enclosed scavenger formats are designed for a controlled mode and rate of activation, rate of oxygen absorption, and specific overall reactive capacity to absorb oxygen. Scavenging chemistries that are initially stable and inactive but can be activated on demand are preferable because they reduce the possibility of premature reaction and loss of scavenger activity before application. Scavenging systems are generally designed to be activated by external fields and penetrating agents such as UV radiation (photoreducible organic compounds) or moisture diffusion (oxidation of transition metals). Scavengers that are immediately active upon their manufacture are less desirable since they generally require high levels of protection from environmental oxygen before use. To rapidly deoxygenate a package, an oxygen-scavenging chemistry has to be readily accessible to both activating agent and oxygen. Therefore the scavenger packets are often made from microperforated or otherwise highly permeable film substrates. Numerous sizes and formats of packaged oxygen scavengers with varying oxygen absorption capacity and activated at different RH levels have been developed for specific applications.

Oxygen-scavenging capacity of the packaged scavenger unit as well as the mode and rate of its activation are critical for packaging system design. The rate of oxygen absorption by the scavenger, determined by its format and chemistry, and overall oxygen transmission rate (OTR) of the package wall determine the minimal attainable oxygen concentration in the package headspace. OTR of the package, together with the overall reactive capacity of the scavenger, control the overall duration of protection from ingress of ambient oxygen. In well-designed oxygen-scavenger/package systems, attaining and maintaining 100 ppm or less of residual headspace oxygen is considered to be the norm. At 100 ppm, effective control of the detrimental effects of oxygen on foods has been demonstrated (7). Oxygen scavengers are often used in conjunction with modified atmosphere packaging (MAP) techniques, such as vacuum packing and flushing headspace with inert gas before sealing, to reduce residual oxygen amounts. The gas flush reduces the scavenger reactive capacity requirement per package and is a more economic means of reducing the oxygen down to as little as 0.5%, but flushing alone is not capable of reaching the oxygen levels possible with the use of the scavenger (4).

The oxygen-scavenging technologies constitute a major part of active packaging techniques and methods, and they have been extensively patented worldwide, especially in Japan. Commercial use of oxygen scavengers started in 1976 in Japan and in 1984 in the United States. UK-based consulting and media concern Pira International Ltd. estimated the global value of the total active packaging market in 2005 to be worth more than US$1.5 billion and has forecasted this market to be worth more than US$2.6 billion in 2010. The global market for packaged oxygen scavengers was estimated to be 12 billion units in Japan, 500 million in the United States, and 300 million in Western Europe in 2001. This market was forecast to grow to 14.4 billion units in Japan, 4.5 billion units in the United States, and 5.7 billion units in Western Europe in 2007.

HISTORY

In 1869 Virgil Blanchard of Vermont obtained a U.S. patent for “improvement in preserving fruits, meats, and other substances” (8) by placing an insert with an alkaline solution of pyrogallic acid into an air-tight vessel. Removal of both headspace oxygen and oxygen leaked through the seals was claimed via reaction of pyrogallic acid with oxygen. In 1938 Henrik Tallgren of Finland was granted a British patent for “keeping food in closed containers with water carrier and oxidizable agents such as zinc dust, iron powder, manganese dust, etc.” (9). F. Isherwood of the Low Temperature Research Station at University of Cambridge obtained a patent for “removing oxygen from a container containing vacuum or gas packed food in which a metal absorbs oxygen to form an oxide” in 1943 (10). This early activity was followed by attempts to use powdered metals to purify industrial gases and the development of a system to scavenge oxygen by use of palladium catalysts in a hydrogen-flushed package by American National Can in the 1960s. In 1969, Mr. Fujishima attempted to market a hydrosulfite-based oxygen scavenger that reacted very quickly, causing problems with lost capacity, and also had a propensity to react with food volatiles to form noxious sulfur-containing gases. None of these early developments resulted in any significant commercial activity. Mitsubishi Gas Chemical Co. (MGC) of Tokyo, Japan has been issued a patent for a ferrous-iron-based scavenger formulation in 1977 and was the first company to start marketing of their Ageless® brand sachets in 1976.

The early success of oxygen scavengers in Japan appears to be tied to the tradition of gift-giving and the importance of flawless presentation and quality (11), especially in the hot and humid summer climate of Japan. When the gift was a food item, the quality assurance provided by an oxygen scavenger was a reasonable precaution. Several confectionery items given as traditional gifts also suffered from short shelf life due to mold growth. For foods such as Japanese rice cake, the shelf life and quality improvements afforded by a combination of a barrier package and an oxygen scavenger allowed for a longer distribution cycle and made Ageless® a commercial success. Competitors followed in Japan and other Asian countries, and today there are more than a dozen, although MGC is still leading the industry. Metal-based oxygen scavengers are not the only option, because many organic scavenging systems have been proposed with the goal to alleviate the possibility of food contamination by metallic compounds, prevent setting off metal detectors, and allow making microwaveable containers. Toppan Printing Co. has marketed an ascorbic-acid-based oxygen absorber since 1979. A catechol-based scavenger has been marketed by Oji Kako Co. under the Tamotsu™ name. Since early 1990s, many scavenger-based oxygen barrier films and structures have been developed with the goal of preventing oxygen ingress into the sealed package.

In the United States, oxygen scavengers were first used in 1984 when General Foods began to ship ground roast coffee with their “Fresh Lock,” an oxygen scavenger formulation supplied by MGC. Multiform Desiccants Inc. (currently Multisorb Technologies, Inc.) of Buffalo, New York entered the U.S. market with their Freshpax® brand oxygen scavengers in 1988 and an initial application for “Meal, Ready-to-Eat” (MRE) rations as developed by the U.S. Army Natick Research, Development and Engineering Command. The Aquanautics Corp. introduced “SmartMix and SmartCup” technology for compounding into packaging such as bottle-cap liners in the late 1980s (12). In addition, CMB Technology (France) introduced their Oxbar® oxygen barrier system, which used a cobalt salt catalyst to accelerate oxidation of MXD-6 nylon blended with PET (13). The original Oxbar® did not become a commercial technology; however, its later reincarnations as MonOxbar® and optically clear DiamondClear® technology, currently a part of Constar International (USA) portfolio, have gained significant publicity and resulted in several commercial applications.

A wide acceptance of oxygen scavengers by the Japanese food industry has not yet been repeated in other markets. Food is more expensive in Japan than in the United States; thus the cost of an oxygen scavenger versus the value of preservation afforded a greater incremental packaging expense in the Japanese market. The U.S. food industry has had other reservations, especially regarding the liability of loose scavenging sachets and potential food contamination by their contents. The acceptance is growing in the United States and Europe as the technology has matured and adapted to specific applications that make economic sense in the U.S. and EU markets. Notably, food stores at Walmart supercenters in the United States started switching from high-oxygen packaging for case-ready meats to low-oxygen master packs with enclosed oxygen scavengers in late 2007 to improve preservation and shelf life of red meats such as beef steaks and ground beef.

SPOILAGE CONTROL WITH SCAVENGERS

Preservation of foods and other products with the use of an oxygen scavenger will be improved only when an oxygen-related spoilage is the primary pathway of quality deterioration. The economic significance of the various spoilage types attributable to oxygen also varies and should be factored into any decision to employ a scavenger. In situations where control of oxygen is warranted, the observable advantages include greatly reduced losses and returns due to spoilage, improvement in consumer confidence and relations, increased distribution radius due to a longer shelf life with correspondingly increased sales expectations, and improved plant scheduling due to longer product runs taking advantage of the longer shelf life.

Primary use of an oxygen scavenger is to control aerobic microorganisms. While both MAP and vacuum packaging have the capability to aid in control of aerobic bacteria and mold, it has been reported that mold colonies may grow in even 0.4% residual oxygen in as little as 10 days (7). Both vacuum and MAP techniques may not be able to effectively deliver or maintain such low initial residual oxygen concentrations, although an appropriate concentration of carbon dioxide may also effectively suppress mold growth. However, Powers and Berkowitz (14) noted that an oxygen absorber prevented mold growth in specially formulated and packaged bread for up to 3 years, and oxygen scavengers are also reported to control mold growth on crusty rolls for at least 60 days (15). In commercial practice, use of an oxygen scavenger to control mold is a major use in Japan but has been of minor importance elsewhere in the world. Use of barrier packaging for baked goods appears to be more prevalent in Japan than in the United States, and oxygen scavenger use makes sense only where a suitable barrier to oxygen permeation is employed. In the United States, the MRE, beef jerky, and fresh pasta industries have adopted packaged oxygen scavengers to control mold growth on their products. Permeation of oxygen into the package over time, which leads to mold growth, is the major concern that can be addressed with either enclosed scavengers or reactive barrier packaging.

Another oxygen related mode of food spoilage is through oxidation of various pigments in the food itself (16). This generally takes the form of a darkening of color—for example, due to enzymatic browning reactions (17). While color change does not in and of itself make the food product inedible, consumers appear to perceive that such darkening is an effective indicator of other spoilage problems that may have occurred simultaneously. Therefore, such pigment darkening may effectively end the shelf life of the packaged product. The smoked/processed meat industry is especially aware of the problems of discoloration and consumer reluctance to purchase packages exhibiting a color darker than other packages in the same retail case. Oxygen scavengers, more than any other packaging method, excel at reducing headspace oxygen to such low levels that pigment oxidation does not occur for extended periods of time (16, 18). Color preservation is often cited as a reason for using oxygen scavengers in the United States and Europe.

Another mode of oxygen related deterioration of foods is through oxidation of fats and oils in the product (7, 16, 19). This process is commonly referred to as the rancidity of lipids and yields organoleptic changes in them that are usually considered undesirable even though rancidity is commonly accepted in some food products such as fried fish and nutmeats. The byproducts of this type of oxidation may include peroxides, aldehydes, ketones, and carboxylic acids. The presence and undesirable odor of many aldehydes and ketones is detected by humans at levels well below 1 ppm, and this fact presents a major problem for food processors. Use of an oxygen scavenger has been shown to positively control this type of oxidation (20) because peroxide values have remained essentially unchanged over time in packages protected by the scavenger. Conversely, reduction of headspace oxygen to the low ppm range tends to preserve vitamin and nutrient content of foods.

Another example of a type of food spoilage, related to oxygen in the package headspace, is insect infestation. Many grains and flour products suffer losses due to weevils and the like, and it has been shown that these can be controlled by use of an oxygen scavenger (21). While an infestation may have been suppressed during the storage of the bulk grain, either a later hatch or a reinfestation may occur during packaging or distribution. Insect eggs, larvae, or pupae may be present, but all need some amount of oxygen to survive. Elimination of the headspace oxygen will eventually kill all forms of the infestation and prevent further damage, although it may take as long as 12 days to kill the eggs of some of the more resilient insects. There have been limited uses of this concept in the United States for bird seed and preservation of museum artifacts, but it is an accepted practice in Japan.

When the product to be protected is not a food product, oxygen scavengers can also provide significant benefits. Some pharmaceutical formulations are easily degraded by oxygen: In particular, vitamin C, vitamin E, and β-carotene employed as antioxidants are commonly packaged with an oxygen scavenger. Many newer hormone replacement therapies and similar drugs are unstable in the the presence of oxygen and will not meet common pharmaceutical shelf-life requirements without reactive oxygen barrier packaging. Closely related to the food industry, pet food and pet snacks are often protected with an oxygen scavenger as rancidity and mold appear to be a problem for pets. Protection of metals from corrosion in demanding applications such as electronics often requires the use of oxygen scavengers. In the meantime, the food industry remains the dominant worldwide consumer of oxygen scavengers.

CHEMISTRY

Applications of scavenging technology are complex primarily because of different chemistries involved, their activation mechanisms, the endpoints of oxidation, the reaction byproducts, and the interactions between the scavenger and the product. The iron-based oxygen scavengers are the most prevalent and they are examined first.

The iron technology is based on rapid oxidation of iron powders to prevent headspace oxygen from reacting with foodstuff components or to reduce oxygen permeation rates through container walls. Reduced iron powders (zero-valent iron Fe^0) are highly reactive and possess a higher capacity to react with oxygen than partially oxidized ferrous iron (Fe^{2+}) compounds. Large exposed surface area of iron powders per unit weight, which increases with reduction in mean particle size and especially when using highly porous "sponge" iron morphologies, promotes simultaneous oxidation at multiple reactive sites, resulting in faster rates of oxygen scavenging. Presence of electrolytes and an aqueous interface to facilitate electron transfer during oxidation is known to accelerate oxidation reactions of transition metals. This is exemplified by rapid rusting of ferrous metals and steels exposed to road salt and salted seawater, in contrast with slow rates of corrosion in the dry climates. Ferrous and ferric iron oxides and hydroxides produced by oxidative reactions are basic. As a result, acidic environments promote oxygen scavenging by shifting equilibrium to iron oxides. At low pH values, oxidation of reduced iron proceeds in humid environments even in the absence of oxygen, by deoxygenizing water molecules and resulting in hydrogen gas formation.

Since low pH values and aqueous interfaces require the presence of water, water vapor diffusion and variation in relative humidity of the environment can be used to control activation of oxygen scavenging capacity of iron powders. The specific formulations are designed to trigger the activation at desired RH levels, control the reaction rate, achieve the full oxidative potential of the iron powder, maintain compatibility with various products, and ensure food safety. The reaction formula for complete oxidation of reduced iron to eventually form ferric oxide trihydrate complex (commonly known as rust) is

$$4Fe^0 + 3O_2 + 6H_2O \rightarrow 4Fe(OH)_3 \rightarrow 2(Fe_2O_3 \cdot 3H_2O)$$

Many transition metals are recognized as being sufficiently oxidative to become candidates for an oxygen-scavenger formulation; however, iron does offer unique advantages that have driven the industry to general use of this medium. Iron has a relatively high affinity to combine with oxygen on a per unit weight basis compared to most alternatives. Complete oxidation of 1 g of reduced iron removes 300 cm^3 of oxygen at STP conditions. Elemental candidates that exceed it have drawbacks such as the odor problems with the use of sulfur and the propensity of aluminum to form an almost impermeable oxidized skin layer that limits further oxidation. Iron rust, on the other hand, flakes off as it forms and it is highly permeable to further duffusion of water and oxygen. Of great importance is the food safety of iron powders, which are recognized as nutrients important for healthy blood and commonly used as food enrichments in milled flour, breads, breakfast cereals, and baby foods. The same cannot be said about copper, zinc, aluminum, and many other transition metals. The abundance and relatively low cost of producing elemental iron are also important, especially in comparison to choices such as palladium and platinum metals and catalysts based on them. Then there is the ready ability to manipulate reactive capability of iron powder formulations to adapt to a wide variety of applications for both the rate of oxygen scavenging and the activation by the moisture in a package headspace. One of the few drawbacks is that the oxidation of iron is a temperature-dependent reaction and normally slows dramatically as the temperature approaches freezing.

Electrolytes and acidifying agents in a scavenging formulation are commonly supplied by metallic salts (22). The practical considerations of food safety have dictated that common table salt (NaCl) is often the best choice for the electrolyte, while various metal and organic salts of strong acids are often used to increase the acidity of the formulation. Another important factor in oxygen scavenging chemistry is the desired control of activation or triggering the scavenging reaction on demand in every application. When the packaged product does not have a required water activity to fully activate an iron-based scavenger and provide the desired reaction rate, premoisturized silicas, zeolites, and activated carbons are used as self-contained water carriers in various proprietary formulations to provide a reliable activation.

There are two broad categories of iron-based scavenger formats, commonly described as "moisture-dependent" type and "self-reaction" type. For the moisture-dependent chemistries, either no moisture or insufficient moisture is present in the sachet or label formulation and the chemistry must have the capability to absorb moisture from the headspace of the package. A significant advantage of these formulations is that they are stable in ambient environments until sufficient moisture has been absorbed to allow reaction to occur. The package into which they are inserted must provide a moisture source, which limits the use of these formulations to food products with relatively high water activity. For the self-reaction type, the necessary moisture is added right into the sachet on a suitable carrier. These carriers must carry a high percentage by weight of moisture and must bind the moisture strongly enough so that the formulation powder remains free-flowing, yet they must release the moisture as needed for the reaction. This type of formulation has to be protected from environmental exposure because it will start scavenging oxygen immediately and can exhaust its capacity if exposed for extended periods. An additional disadvantage is that the preloaded moisture is subject to desorption and equilibration in the package over time, which means that with extremely dry products, the moisture will leave the sachet. The loss of preloaded moisture means that the oxygen scavenger will eventually stop working even though it may still contain unoxidized iron.

It should be noted that since oxygen scavengers are routinely used with MAP, there will be situations in which the application dictates gas flushing of the package headspace with gas mixtures containing carbon dioxide. This is an area for caution because many iron-based formulations are unsuitable for use with carbon dioxide because they will absorb it preferentially over oxygen. Many of these formulations have a capacity for about five times as much CO_2 as O_2 and will thus fail to remove enough oxygen to prevent spoilage. Furthermore, these formulations can also reduce the beneficial effects of carbon dioxide by reducing its intended concentration in the headspace. However, formulations are available that both scavenge oxygen and release carbon dioxide (CO_2 emitters), and one of these should be used when gas flushing with CO_2 is used.

Sulfites, bisulfites, and their analogues have been suggested and used as oxygen scavengers for a long time (23). Sulfites are commonly added to bottled wines to preserve their quality. Desirable oxygen scavenging action is produced by oxidation of sulfites to sulfates. The reactive capacity of such scavengers is rather small to be used as a reactive filler in barrier structures, therefore, their use was limited to sachets and liquid sulfite layers (24).

Use of iron-based oxygen scavengers can create problems with metal detection because there is enough iron in most sachets and labels to set off a metal detector. This is generally overcome by using metal detectors just before the scavenger insertion to assert that no extraneous metal is present and then another just after to assert that the scavenger has been added. In situations where this has not been possible, organic oxygen scavenging chemistries can be successfully used. Organic scavengers are also beneficial for making polymeric barrier films and structures due to often improved compatibility with matrix resins and higher achieveable levels of dispersion compared to dispersion of inorganic powders, generally insoluble in plastics.

Ascorbic acid and other ascorbates are known organic antioxidants because they oxidize to dehydroascorbic acid in the presence of transition metal catalysts, preferably copper. Pillsbury Co. (now a part of General Mills, Inc.) holds a patent to use ascorbic acid as a reducing agent. A combination of ascorbates and sulfites was used as an oxygen scavenger embedded in plastic closure liners by the Darex Container Products division of W. R. Grace & Co. The technology has only achieved minor acceptance in the United States, but it does have unique advantages and disadvantages. Due to a lower capacity to scavenge oxygen, it generally requires a larger sachet and weight of reactant to accomplish the same oxygen removal as for the iron-based technology. Carbon dioxide is also released as a byproduct of oxidation.

Other proposed organic oxygen scavengers included gallic acid, *n*-propyl gallate, butylated hydroxyanisoles (BHA), butylated hydroxytoluene (BHT), and dihydroguaretic acid, which can serve as reactive barriers when added to plastic packaging structures rather than being used as food additives. Migration of these low-molecular-weight chemicals as well as byproducts of their oxidation into the product cannot be completely prevented. To overcome this problem and increase the available activated capacity of scavengers, more recent developments focused on oxidizable polymers that can be used as barrier resins or blended with common packaging polymers to create reactive barriers to oxygen permeation. Ethylenic unsaturation in linear hydrocarbon polymer backbones and pendant groups as well as in polyunsaturated fatty acids is subject to auto-oxidation, especially in the presence of transition-metal-based catalysts:

$$-CH = CH- + O_2 \rightarrow -CH = C(OOH)-$$

The resulting hydroperoxides can decompose to produce free radicals, which can in turn combine by crosslinking, can initiate free radical polymerization of other double bonds if enough of them are present, or can cleave the double bonds in the course of successive oxidation reactions. Such reactions can be catalyzed by salts of transition metals (e.g., cobalt is most common). Rearrangement and cleavage of the hydroperoxides to aldehydes and ketones result in low-molecular-weight byproducts that adversely affect odor and flavor of packaged foods in very low concentrations. These effects limited the use of unsaturated hydrocarbons in food packaging. Oxygen Scavenging Polymer (OSP) developed by Chevron-Phillips Chemical Co. gets around this problem by including the double bond in a pendant cyclohexene ring (25). This way pendant carboxylic acid groups are formed on the polymer backbone as a result of oxidation rather than free low-molecular-weight byproducts.

Rapid rates of oxidation of certain polyamides in the presence of transition metal catalysts have been exploited to produce reactive oxygen-scavenging barriers. MXD-6 nylon with a cobalt salt catalyst has been the primary system patented by MGC and is targeted for incorporation into the inner layers of polymeric packaging structures. Having a large reactive capacity and high reaction rates, MXD-6 nylon-based scavengers can provide nearly zero oxygen transmission rates through nylon barrier layers. However, their use is limited by layer delamination issues, the potential migration of low-molecular-weight reaction byproducts into the packaged product, relatively high cost, and a lack of regulatory approval for direct food contact. Oxygen-scavenging barrier systems based on MXD-6 nylon and cobalt salts have experienced some limited success when multiple producers started blending them as minor additives to reduce migration and improve barrier properties of PET and other packaging resins.

CSIRO Australia has introduced photosensitive dyes as oxygen scavengers independent of transition metal catalysts (26). Functionalized anthraquinone-based chemistries can act as singlet oxygen acceptors after being excited by UV light. Excited dye molecules sensitize ground-state oxygen molecules that diffuse through a polymer in a singlet state. Singlet O_2 molecules react with the dye and are consumed. $ZerO_2^{®}$ is a CSIRO line of UV-activated oxygen scavengers incorporated into reactive barrier films. Despite lower capacity than that provided by metal-based scavengers, $ZerO_2^{®}$ scavengers have advantages such as efficient low-energy activation on demand and their reactivity being independent of moisture diffusion and transition metal based catalysts.

Biochemical reactions in living cells are accelerated by biologically specific organic catalysts called enzymes. Certain enzymes can function as oxygen scavengers within barrier structures. To act as scavengers, enzymes must be first immobilized within the polymer matrix. Although many enzyme candidates can be thought of as oxygen absorbers, few systems have been attempted in practice. Oxygen removal by a combination of glucose oxidase and catalase is a primary example (27). It should be noted that oxygen-scavenging enzymes and coupled enzyme systems cannot act without water and are very sensitive to changes in pH, water activity, temperature, salt content, and other factors. On the other hand, common thermoplastics such as polyethylene and polypropylene are good substrates for enzyme immobilization. Stability of immobilized enzymes in the film is not fully analyzed. Other food-grade enzymes can potentially be used for oxygen scavenging: One example is ethanol oxidase, which oxidizes ethanol to acetaldehyde. Bioka Ltd. of Finland commercially produces enzyme-based scavenging sachets.

Some organometallic complexes known as ligands are capable of trapping free oxygen in a manner similar to that of blood hemoglobin (containing Fe^{2+} ligand in heme) and other peptides with metal-containing prosthetic groups. When immobilized on a solid support such as silica, these ligands have been demonstrated to form a highly reactive oxygen-scavenging medium (28). Such systems anchored to an insoluble support can be dispersed in polymer matrices as powders to form reactive barriers. Advanced Oxygen Technologies, Inc. (New York, NY) has developed a series of oxygen scavengers based on synthetically produced ligands. Incorporation of ligands into plastic film structures has also been claimed.

APPLICATIONS

Individually packaged oxygen scavenger formats are now found in multiple applications with packaged foods being the primary use. Fresh refrigerated pasta is a major user of oxygen scavengers to maintain quality during its distribution cycle. The smoked/processed-meat industry has several segments that rely on oxygen scavengers to maintain color or prevent mold during distribution. Both presliced pepperoni in thermoformed packages and bacon bits in glass and plastic jars use an oxygen scavenger for color retention. In Great Britain and the United States, sliced deli meats are often produced with very low levels of preservatives and are thus susceptible to rapid discoloration under retail lighting. These are now increasingly packaged with oxygen scavengers to prevent discoloration for up to one month. Beef jerky is commonly packaged with an oxygen scavenger for reasons of both color retention and prevention of mold growth. Case-ready meat master packs often include oxygen scavengers to extend distribution time through deoxygenation. The individual cases are then exposed to ambient oxygen before placing them on the shelves to reoxygenate the meat and restore its original red color. Roasted nuts are often protected from rancidity by scavengers, especially where the product will be used for export or for upscale packages. The MRE military rations remain a major U.S. application that is being adopted by other military organizations around the world. Freeze-dried products often have an elevated oxygen sensitivity, and items such as backpackers' trail foods are now packaged with scavengers. Pizza crusts are also being packaged for some markets with a scavenger to prevent mold during fresh distribution. Baked goods and confections are often packaged with scavengers to prevent mold. Oxygen-scavenging liners in juice and wine bottle caps have been introduced with limited success in some markets. Oxygen scavengers with simultaneous humidity control (e.g., StabilOx® from Multisorb Technologies) are used for protection of pharmaceuticals, dietary supplements, diagnostic tests, and other medical supplies. Other uses include prevention of metal corrosion in archeology, art storage, and electronic components, as well as conservation of oxygen sensitive products such as rubber, plastics, and greases.

Reactive oxygen barrier packaging is another rapidly growing market. Beer, wine, and fruit juices in PET bottles, ketchup in plastic containers, and oxygen-sensitive pharmaceuticals and nutraceuticals in oxygen-scavenging blister packs are some of the current and emerging applications. Sulfur-containing components in beer originating from hops are particularly subject to oxidation and, when oxidized, adversely change beer taste profile. Reaction with 1–2 ppm of oxygen is often enough to cause a beer taste unacceptable to many consumers. Protection of beer in plastic packaging is a major application of oxygen-scavenging barrier technology.

PRODUCTS

Sorted by application format, the following oxygen-scavenging products have been offered by major manufacturers:

Sachets and Labels. Ageless® sachets and labels (Mitsubishi Gas Chemical Co., Japan), Freshmax® labels, Freshpax® and StabilOx® sachets (Multisorb Technologies, USA), ATCO® sachets and labels (Standa Industrie, France), O-Buster® sachets (Desiccare, USA), Bioka sachets (Bioka Ltd., Finland), Freshilizer® sachets (Toppan Printing Co., Japan), Keplon™ sachets (Keplon Co., Ltd. Japan), Tamotsu™ sachets (Oji Kako, Japan), Oxyeater® sachets (Ueno Seiyaku, Japan), Vitalon® sachets (Toagosei Chemical Industry Co., Japan), Secule™ (Oxysorb™ in the U.S.) sachets (Nippon Soda Co., Japan), Sansocut™ sachets (Finetec Co., Japan), and several other Japanese, Korean, and Chinese sachet producers.

Closure Liners. Pureseal® (W. R. Grace and Co., USA), DarExtend® (Darex Container Products, USA), Tri-SO2RB® (Tri-Seal International, USA), Oxycap® bottle crowns (Standa Industrie, France).

Oxygen Scavenging Plastic Packaging Materials. OS 2000® (Cryovac, USA), OSP® (Chevron-Phillips, USA), Shelfplus® (Ciba Specialty Chemicals Corp., Switzerland), Oxyguard® (Toyo Seikan Kaisha Ltd., Japan), Amosorb$^{®}$ (Amoco Chemicals, currently a trademark of Colormatrix, USA), ActiTUF$^{®}$ (M&G Polymers, Italy), ZerO$_2$$^{®}$ (CSIRO, Australia), DarEval$^{®}$ (Darex Container Products, USA), ValOR$^{®}$ (Valspar, USA), Oxbar$^{®}$, Mon Oxbar$^{®}$, and DiamondClear$^{®}$ (Constar International, USA).

SIZING AND CHEMISTRY SELECTION

Rapid removal of headspace oxygen and preventing oxygen ingress through packaging for the longest possible time constitute two different design targets in scavenger applications. Simultaneous attainment of these goals usually requires the use of more than one scavenging solution and chemistry. Combination of rapidly absorbing sachets or labels with high oxygen barrier passive or reactive packaging often provides the best possible performance.

For iron-based sachets, the major factors to consider are the water activity (A_w) of the food product or the equilibrium relative humidity in the package headspace in contact with the product, the total volume of the package, the total weight of the food or other product in the package, the temperatures that the package will experience, whether carbon dioxide will be present in the headspace, the percentage of oxygen initially present in the package, the permeation rate of oxygen into the package, and the total shelf life desired. Water activity, temperature, and presence of carbon dioxide will determine the proper chemistry while the rest determine the proper sizing (4).

The objective of the sizing calculations is to determine actual volume of the oxygen that must be scavenged over time (including both headspace and ingress oxygen). Once the package volume and headspace volume are known, then the percentage of oxygen in the initial headspace gas mixture is used to calculate the actual volume of oxygen that must be scavenged. If the product has a relatively short shelf life, removing this initial oxygen may be all that is required. However, for many packages, more oxygen permeates through the package over its distribution life than the oxygen initially present in the headspace. If this is the case, then the surface area of the package should be multiplied by the oxygen permeation rate (OTR) of the barrier in use and by the expected shelf-life duration to determine the amount of oxygen ingressing over the shelf life. The initial oxygen amount and the oxygen ingress over the shelf life are then added to determine the total capacity necessary for the proper oxygen scavenger for that application. Sachet sizing has been standardized such that most of the chemistry designations are available in sachets of 20, 30, 50, 100, 200, 300, 500, 1000, and 2000 mL of oxygen capacity (measured at STP conditions). Since oxygen is approximately one-fifth of the atmosphere, these oxygen capacities can be used to deoxygenate five times the stated capacity of ambient air.

As better oxygen barrier packaging materials and structures become available, the oxygen permeation rates through packages can be reduced and smaller-sized scavengers are needed to offset the ingress of oxygen. For nearly absolute barriers like aluminum foil, only the initial headspace oxygen has to be removed by enclosed scavenger. Reactive barrier packaging solutions allow us to eliminate loose sachets from the package. Design of reactive barriers to reduce oxygen ingress rates is complicated due to inapplicability of steady-state permeation assumptions, nonuniform activation of scavenger capacity across the barrier, and continuous inhomogeneous depletion of this capacity in the course of scavenging reaction (5). These effects are combined to produce transient nonzero permeation rates (oxygen leakage) over the shelf-life duration, unless the barrier reactivity with oxygen is high enough to result in a zero measured permeation rate. As a rule of thumb for uniformly reactive monolayer barriers, the overall reactive capacity of the film should be twice that of the enclosed scavenger to obtain the same time to complete depletion of the scavenger capacity, provided that the OTR of the passive barrier package and OTR of the inactivated reactive barrier are the same. In both cases of enclosed sachets and reactive barrier films, the scavenger capacity needed to consume the headspace oxygen has to be added to all sizing calculations.

TESTING

One common difficulty experienced by many first-time users of individually packaged oxygen scavengers is the difficulty of determining quantitatively just how well the scavenger is working. The ability to accurately measure 1% residual oxygen in a package headspace is quite common. The difficulty arises when there is only 0.01% because the partial pressure of oxygen is far less inside the package than outside, causing atmospheric oxygen to rapidly equilibrate through any tiny aperture and contaminate many samples (4). Septa and sampling syringes that are entirely adequate at 1% will prove inadequate at 0.01%, as many labs have learned. It is common to use a gated or valved syringe with tight-fitting gaskets and natural-rubber septa to overcome the propensity for leakage. One manufacturer recommends that the sample be taken, the valve closed while the syringe is still in the package, and thumb pressure be maintained on the syringe plunger as it is withdrawn and until the syringe needle is actually inserted into the oxygen meter, and only then is the valve actually opened. By so doing, the sample consistency can be improved. It is also difficult to obtain accurate repeat samples from the same package unless great care is exercised with the septa.

For testing reactive barrier films, the standard carrier gas OTR test methods are suitable (29), provided that the film sample is active or can be activated during the test. Ox-Tran permeation analyzers by MOCON, Inc. (USA) and 8000 series oxygen permeation analyzers by Illinois Instruments (USA) are commonly used to measure OTR with controlled relative humidity on both sides of the film. Since no steady-state permeation can be observed in reactive films until the scavenger capacity is depleted by the reaction, waiting for the establishment of the steady-state (passive) permeation pattern does not provide a measure of the barrier performance. Commonly measured performance properties include: the reactive lag time (or the time after which the steady-state passive permeation pattern across the film is resumed), the initial barrier improvement (or the initial rate of oxygen leakage through the activated reactive film versus OTR of the inactive film), and the induction period (or the duration of full scavenger activation across the film during which the OTR drops to its minimal measurable value). To prevent inaccurate results, OTR measurements shoud be started as soon as the film is loaded into the test chamber and the downstream side is purged of oxygen. This way, no reactive film capacity is wasted on equilibration and the transient OTR profile will provide full information about the film barrier performance. For films with a low oxygen permeability of the polymer matrix material and a large scavenging capacity, the OTR testing even with 100% oxygen at the upstream film side can take a long time. Even longer times will be needed when ambient air is used. Thinner films and lower scavenging capacities incorporated into the film can be used to accelerate OTR testing, quantify barrier properties, and scale-up the barrier designs. The film reactive capacity to scavenge oxygen can be tested separately by placing the activated film sample in a sealed chamber and monitoring oxygen levels in it until equilibration.

FOOD SAFETY AND REGULATORY CONCERNS

Ingestion of iron-containing sachets has been cited as a concern, however, no evidence has been presented regarding physical harm due to such ingestion. Mitsubishi Gas Chemical Co. reports that they have tested the acute oral toxicity (LD_{50}) of their formulations in rats and find it to exceed 16 g per kilogram of body weight (30). LD_{50} values of various food-grade iron powders generally exceed 5–15 g/kg of body weight. Multisorb Technologies, Inc. reports that their oxygen scavenger components are either food- or pharmaceutical-grade materials. Therefore iron-based oxygen scavengers can be used with confidence. Iron toxicity has been recognized as a problem among infants in the United States as related to accidental ingestion of dietary iron-supplement products. Reports of iron ingestion by persons of low body weight can be routinely handled by poison control centers (31). Because of body weight, it is highly unlikely that an adult could ingest enough iron powder from commercially available sachets to cause harm. Additionally, by the time a food package reaches a consumer, the iron would no longer be in a very reactive elemental form but partially oxidized. Use of adhesive oxygen-scavenging labels and oxygen-scavenging films, trays and lidstock eliminates the danger of accidental ingestion.

There is also a necessity to prevent the use of oxygen scavengers in applications where anaerobic bacteria may grow. The food industry employs a number of precautions to control anaerobes. Among these is to use oxygen scavengers only when (a) the water activity of the product is below the point at which *Clostridium botulinum* bacteria will grow (32), (b) the food has been acidified to have sufficiently low pH values, or (c) appropriate curing salts have been used to prevent botulism. Temperature control is generally discounted as a botulism prevention agent where retail packages are concerned, but HAACP systems have been employed for some products. Specific limits have not been given because they will vary from product to product. There is some evidence that the concern over oxygen scavengers and botulism may be overstated. An examination of the oxidative reductive potential in packages with and without oxygen scavengers has been reported to show that the scavenger does not increase the reductive potential (11), and thus does not enhance the risk of outgrowth.

TROUBLESHOOTING

Because oxygen-scavenging technologies are not as prevalent as MAP and are somewhat complex, many users have a need for a diagnostic tool to help evaluate the oxygen scavenger performance. The following points can be helpful for troubleshooting iron-based scavenging sachet and label applications:

1. Is the package hermetically sealed? If not, a hermetically sealed package must be used.
2. Does the package provide sufficient oxygen barrier (as a measured steady state OTR) at the conditions of use? If not, the scavenger will be exhausted prematurely and the product shelf-life expectations will not be met.
3. Are the contents of the sachet or label rusty, or some agglomeration is noticeable? If an evidence of reaction is present, then examine the following factors.
   a. Is the test method capable of measuring ppm oxygen levels? Insufficiently accurate method may indicate high oxygen concentrations when the actual values may be significantly lower.
   b. Is there carbon dioxide present in the headspace? If so, use a scavenger chemistry compatible with carbon dioxide that will scavenge oxygen instead.
   c. Does the scavenger have enough capacity for the product and package headspace? Recheck the sizing calculations and use a larger format as indicated.
   d. If the scavenger is a self-acting type, was it left in the atmosphere for too long before being placed in the package? If so, it may have exhausted part or all of its capacity. Limit the preapplication exposure.
4. If the contents of the sachet or label are not rusty or agglomerated:
   a. Verify that the water activity range of the scavenger chosen matches the water activity range of the food or other product being packaged. If not, change scavenger specification to match the product.
   b. Check to make sure that the scavenger was not blocked off from the headspace by being placed under the food or a tray, or trapped tightly between the product and the barrier film. If so, alter the scavenger placement.

BIBLIOGRAPHY

1. G. A. Cook and C. M. Lauer, “Oxygen” in C. A. Hampel, ed., *The Encyclopedia of the Chemical Elements*, Reinhold, New York, 1968, pp. 499–512.
2. T. P. Labuza and W. M. Breene, *J. Food Proc. Preserv.* **13**, 1–69 (1989).
3. J. D. Flores, *Chem. Eng. Prog.* **June**, 25–32 (1990).
4. R. C. Idol, “Oxygen Scavengers” in A. L. Brody and K. S. Marsh, eds., *The Wiley Encyclopedia of Packaging Technology*, 2nd edition, Wiley-Interscience, New York, 1997.
5. S. E. Solovyov and A. Y. Goldman, *Mass Transport and Reactive Barriers in Packaging: Theory, Applications, and Design*, DEStech Publications, Lancaster, PA, 2007.
6. S. E. Solovyov, *J. Phys. Chem. B* **108**, 15618–15630 (2004).
7. H. Nakamura and J. Hoshino, in *Sanitation Control for Food Sterilization Techniques*, Sanyu Publishing, Tokyo, 1983, pp. 1–45.
8. V. W. Blanchard, U.S. Patent 96,871, 1869.
9. H. Tallgren, British Patent 496,935, 1938.
10. F. A. Isherwood, British Patent 553,991, 1943.
11. Y. Abe, *Active Packaging—A Japanese Perspective*, Mitsubishi Gas Chemical Co., Ltd., Tokyo, Japan, 1990.
12. B. Zenner, *J. Packag. Technol.* **January/February**, 37–38 (1991).
13. R. Folland, “The Oxbar Super-Barrier System: A Total Oxygen-Barrier System for PET Packaging,” in *Proceedings of Europak ’89*, October 1989, pp. 483–494.
14. E. Powers and D. Berkowitz, *J. Food Protect.* **53**(9), 767–771 (1990).
15. J. P. Smith, B. Ooraikul, W. J. Koersen, E. D. Jackson, and R. A. Lawrence, *Food Microbiol.* **3**, 315–320 (1986).
16. Y. Harima, “Free Oxygen Scavenging Packaging” in T. Kadoya, ed., *Food Packaging*, Academic Press, San Diego, 1990, Chapter 13.
17. C. Y. Lee and J. R. Whitaker, *Enzymatic Browning and Its Prevention in Foods*, ACS Symposium Series 600, American Chemical Society, Washington, DC, 1995.
18. H. J. Andersen and M. A. Rasmussen, *Int. J. Food Sci. Technol.* **27**, 1–8 (1992).
19. J. Belcher, “Optimizing the Potential of Oxygen Absorber Technology” in *Proceedings of Pack Alimentaire ’93*, June 1993.
20. Y. Abe and Y. Kondoh, in A. L. Brody, ed., *Controlled/Modified Atmosphere/Vacuum Packaging of Foods*, Food & Nutrition Press, Trumbull CT, 1989, pp. 149–158.
21. Y. Kondoh, “Oxygen Absorbers—Review of Current Worldwide Market Situation and Emerging New Technologies,” paper presented at Future Pak 1993, Atlanta, GA.
22. T. Klein and D. Knorr, *J. Food Sci.* **55**(3), 869–870 (1990).
23. C. C. Loo and W. P. Jackson, U.S. Patent 2,825,651 (to Carnation Co.), 1958.
24. W. R. Scholle, U.S. Patent 4,041,209 (to Scholle Corp.), 1977.
25. T. Y. Ching, G. Cai, D. Craig, M. S. Galland, J. L. Goodrich, J. P. Leonard, A. Matthews, K. W. Russell, and H. Yang, World Patent 1999/048963 (to Chevron Phillips Chemical Co. and Sealed Air (NZ), Ltd.), 1999.
26. M. L. Rooney, *J. Food Sci.* **47**, 291–294, 298 (1985).
27. B. L. Sarett and D. Scott, U.S. Patent 2,765,233 (to Sarett), 1956.
28. A. L. Brody, E. R. Strupinsky, and L. R. Kline, *Active Packaging for Food Applications*, Technomic Publishing, Lancaster, PA, 2001.
29. ASTM D3985-02e1, “Standard Test Method for Oxygen Gas Transmission Rate Through Plastic Film and Sheeting Using a Coulometric Sensor” in *Annual Book of Standards* 15.09; ASTM, Philadelphia, PA, 2005.
30. *Ageless—A New Age in Food Preservation*, Mitsubishi Gas Chemical Co. Ltd. brochure, Tokyo, Japan, 1991.
31. W. Klein-Schwartz, G. M. Oderda, R. L. Gorman, F. Favin, and S. R. Rose, *J. Clin. Pediatr.* **29**(6), 316–321 (1990).
32. K. Glass and M. Doyle, *J. Food Protect.* **54**(3), 162–165 (1991).

P

PACKAGE-INTEGRITY IN STERILE DISPOSABLE HEALTHCARE PRODUCTS

Fritz Yambrach
Rochester Institute of
Technology, Rochester,
New York

The manufacturers of products used in healthcare activities are referred to as the medical device industry in the United States. Healthcare products include tongue depressors, cardiac pacemakers, artificial joints, and hospital beds and range from highly technological products patented for unique design features, employing a variety of technologies, to commodity products sold for a variety of applications, healthcare being just one. The firms represented by the industry present an example of a business that by its nature is an integration of technical activities by various actors: biological sciences, mechanical engineering, material science, and entrepreneur behavior, to name a few. Unique to this industry is the high performance requirement placed on the package and packaging process. A failure in the package or process is viewed by the Food and Drug Agency (FDA) as a critical defect equal in gravity with a product design failure (1).

Sterile disposable medical products are a relatively new product group, in existence only since the 1960s. The arrival of this new product group created an increased healthcare quality by utilizing single-use sterile medical products. The development of these one-way products has reduced the risk of contamination from previously used products that were sterilized after each use in the hospital where there existed a probability of error in the steriliztion process. The advent of this product group, based on the "Kleenex" principle, eliminated the cost and risk of in-hospital sterilization. This product group has been growing, with more products being introduced in the healthcare industry each year. These products have a new set of protective requirements that their packages have to meet. Because the products are disposable after one use, the packaging cost must not significantly increase the cost of the product, so along with functional protective requirements the packaging is frequently restricted by cost constraints. This is not true of all sterile disposable products, because there are many that may cost several hundred dollars and these can afford to have higher package costs.

PACKAGE REQUIREMENTS IN HEALTHCARE PACKAGES

The basic requirements of a package are to protect the product from the producer to the consumer. The definition of "protection" is to prevent any activity from taking place during the distribution channel that could render the product useless or significantly reduce its usefulness. It is beneficial to understand the basic requirements and applications of a package prior to a more thorough discussion of specific functional requirements. The main requirements of a disposable device package include the following:

1. *Maintain Sterile Barrier around the Product*. The first and most important functional demand of a device package is for the package to maintain a sterile barrier around the product. This sterile barrier is accomplished mostly by flexible packages or blister packages. The simple, low-cost devices that require little physical protection are usually packaged in flexible bags or pouches. These simple packages provide excellent barriers to microorganisms when the correct materials are chosen, and they are very material efficient. Complex devices such as implants or multiple channeled IV (intravenous) sets require more protection and often additional product-use functions. These products are often packaged in blister trays that offer more physical product protection and other features for product use, such as separate areas in the package for holding items before or after their specific use (see also Skin packaging). If the sterile integrity is compromised by a hole in the package or a ruptured seal, the product is regarded as contaminated and determined unusable. The potential contamination of a patient from a nonsterile product due to package failure is a very real concern with serious outcomes. The maintenance of a sterile barrier is a result of keeping anything in the external environment from breaching the package and keeping the product from breaching the package integrity. The breach does not have to be more than a few micrometers in size for a microorganism to enter the package. This barrier function relies solely on material and package seal integrity.
2. *Allow for Sterilization*. The second major functional demand that a package may have to meet is the ability to allow for the product to be sterilized. This demand translates into the package having to survive the stress of a sterilization process and allow for complete sterilization of the product within that package. This is a necessary demand on the package system in most products because the products are sterilized after they have been packaged. Sterilization occurs after the product has been sealed in the primary package and the primary package has been packaged into the corrugated shipper. Four main sterilization processes are used to sterilize medical devices, gamma radiation, ethylene oxide gas, electron-beam radiation, and steam. Gamma radiation and ethylene oxide are responsible for about 85% of the disposable market, with each currently having

approximately one-half of that group. The electron-beam system is gaining market share because of several new developments in that process that make this sterilization technology particularly beneficial to the medical-device industry. Other sterilization systems are used to sterilize devices, including gas plasma, vapor-phase hydrogen peroxide, peracetic acid, and X-ray, but each has limited applications due to certain factors and limitations in each system (2). Certain products have unique needs that are satisfied by these other sterilization systems, but presently they represent minor applications for device sterilization.

3. *Aid in Aseptic Removal of Product.* Another requirement of these packages is that they must allow for an easy opening of the package by the medical personnel. The opening of the package must not compromise the sterility of the product. The package must facilitate sterile, struggle-free opening without the use of nonsterile opening devices. Low-aggression opening of the package allows for easy removal of the sterile product and reduces the risk of contaminating the product by struggling with the package and touching sterile areas on the product or dropping the product on a nonsterile area. This requirement is particularly problematic in that the package, to accomplish an easy opening, must have a low resistance to force applied to the seal areas while remaining intact. This low resistance to physical stress increases the difficulty of the package to remain intact through the physical stresses occurring during sterilization and distribution cycles. The easy-opening feature is generally accomplished through the use of a heat-seal material that has low cohesive strength. Ethylene–vinyl acetate (EVA), a copolymer of polyethylene and vinyl acetate, has a low cohesive strength and allows for a thermoplastic heat seal that gives the required microbial barrier (see Aseptic packaging).
4. *The Package Should Not Add to Airborne Contamination.* The package material should remain intact and not tear and create airborne fiber that can settle down and recontaminate the product during opening. This translates to having packaging materials that are higher in cohesive integrity than the heat-seal materials used. When a package is opened, the package material should not tear but the adhesive will come apart. Additionally, heat-seal adhesives should not be prone to particulate generation. The adhesive should separate and remain on the package materials. This particulate concern also includes dust that has settled on the exterior of the package becoming airborne through a vigorous opening action. The dust problem can be solved by low-cohesive-strength heat-seal materials, designing a flat package with few folds to allow for dust collection, and the use of materials with smooth surfaces.
5. *Aid in Product Identification.* The product should be easily identifiable while still in the unopened package. This eliminates the opening of a package, with the consumer erroneously thinking that another product or variation of the product was inside. Ease in product identification is a particularly important feature where numerous products or product variations need to be distinguished. In the case of erroneously opening a package, the entire product would be thrown out because the sterility was compromised. Transferral of product-specific information can occur in many ways in the unopened package. Use of clear packaging materials can allow for product inspection through the unopened package. The package can display an illustration of the product with specific items highlighted on the exterior of the package. The package can be color-coded so that a line of similar products with different specific features could be graphically identified by the colors used for copy.
6. *Evident Opening Features.* The opening feature of the package should be designed to clearly indicate that the package has been opened. There should be no reclosable feature on the package that would allow for the package to be opened, contaminated, and then resealed. The package seals should, when opened, visually alert hospital personnel that the package had been opened and sterility had been compromised.

PACKAGE AND MATERIAL REQUIREMENTS FOR STERILIZATION PROCEDURES

Generally, the maximum physical stress to which a package will be exposed is during transportation and distribution, including truck shock and vibration, the drops in handling, and finally the twist and compression of handling the packages by hospital personnel. A current issue in the device industry is the increased practice of using flexible packages to contain products that are relatively heavy. These heavier products will severely stress the package materials and particularly the seals as they are moved against the seals during transportation shock and vibration stress. This is basically a package design issue which must be addressed by utilizing more rigid packages that “isolate” the product during distribution. When the product is isolated in the package and not allowed to move, it will not push against the seals and force the package to open. This is accomplished by using blister packages with design elements in the blister to hold the product imobile.

A medical package will face all these stresses, but additionally the package will be exposed to stress during product sterilization. The particular sterilization process used exerts a unique set of stresses on the product and also on the package. Ethylene oxide sterilization, for example, will stress the package integrity more than it stresses the materials. Both radiation and sterilization seem to have the most stressful effect on the material properties. The package and materials must withstand these demands and after these processes remain functionally intact throughout distribution and storage.

Since sterilization occurs after the product has been packaged, the package sees the same contact with radiation, chemicals, moisture, and heat that the product is exposed to during sterilization. The material properties may change as a result of the sterilization exposure, and some low level of change is acceptable. The package properties may change as a result of the material changes, but as a whole the package must maintain a high level of microbial barrier. What is not allowable is *any* loss of sterility. If the sterile integrity of the package is breached to any degree by seal rupture or stress cracks in the material, the product is considered contaminated and unacceptable.

Each sterilization system used requires that the package perform in some way in order to facilitate sterilization. Autoclave (steam) and ethylene oxide (EtO) sterilization both require a vacuum process in a chamber as a mechanism for the sterilant to pass through the package and contact the product and sterilize it. Autoclave sterilization requires that hot steam be allowed to pass through the package and contact the product. The package must not act as an insulator or be a barrier to the steam. An additional requirement for steam sterilization is for the package to tolerate high temperatures without losing intended properties. Ethylene oxide (EtO) sterilization requires a certain level of porosity in the package material for the EtO gas to pass through the package material, contact, and sterilize the product. Porosity is also necessary for removal of the EtO gas from the package at the end of the sterilization cycle. Gamma and electron-beam sterilization both require a tolerance for low-level energy without loss of mechanical properties. These packaging materials must also not shelter the product from energies required for an effective kill.

The stress a package must withstand in this industry may be compounded in two ways:

1. It is possible for a package to see multiple sterilization cycles. This occurs when a batch of product is sterilized and the batch fails to meet sterility requirements. If this occurs, the batch is allowed to be resterilized and retested. The sterilization effects on a package are cumulative, and package design must consider the worst-case challenge.
2. A single package design may be required to satisfy the requirements of two different sterilization systems. This occurs when a company has multiple manufacturing locations and different sterilization facilities are used at each location. The company does not want the product to be on the market in two different packages, so one package must meet the functional needs of two different sterilization procedures.

Steam and (EtO) Sterilization

Steam and EtO sterilization systems are similar in that they both use mechanical systems to deliver a sterilant to the product. In the case of steam, the sterilant is hot moist air; in the case of EtO, it is a warm gas. The mechanical systems designed to deliver the sterilants rely on the differences in pressure created by a vacuum in a vessel to move the sterilants through the package walls and then to contact the product. The packages are placed in a sealed chamber, and then a vacuum is pulled on the entire chamber. The sterilant is then released into the chamber; and because of the pressure difference, the incoming gas with the sterilant replaces the low-pressure areas, moving through the package and contacting the product. This is held for a period of time, and then another vacuum is pulled on the chamber to remove the sterilant. Figure 1 shows the pressure changes in a typical steam-sterilization cycle.

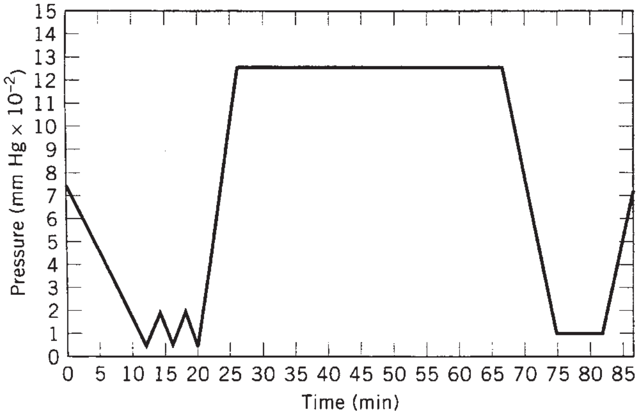

Figure 1. Changes in pressure in a typical steam sterilization cycle.

The back-and-forth changes in pressure contribute to package-seal rupture in these sterilization systems. The decrease then increase in interior gas volume causes the seals tbe stressed in a sort of “bellows” effect. This seal stress is increased by the warm to hot temperatures used during the cycle. The EVA heat seal is a low-melt-temperature thermoplastic, and elevating the temperature softens the material and weakens the seal strength. The amount of vacuum drawn, quickness of the evacuation and repressurization, package porosity, and temperature are the key variables to control in order to maintain package integrity. It would be possible for the pressure cycles to be very slow and gradual, but that would increase the processing times and add to the cost. In an EtO cycle, the temperatures may be lowered to lessen the effect of temperature softening the EVA heatseal, but to compensate a longer exposure time may be required. Figure 2 shows the pressure changes that occur during a typical EtO sterilization cycle. Steam sterilization requires a minimum temperature that cannot be reduced. These variables are balanced with the package’s ability to survive the sterilization system. If the need for improved package integrity outweighs the cost of a longer cycle, then the cycle could possibly be altered.

The mechanical similarities between the steam and EtO processes allow for some common solutions to the problems caused by the systems. The most serious common problem is the stressing and rupturing of the heat seals during the pressure changes in the sterilization cycles. There are package and package material variables

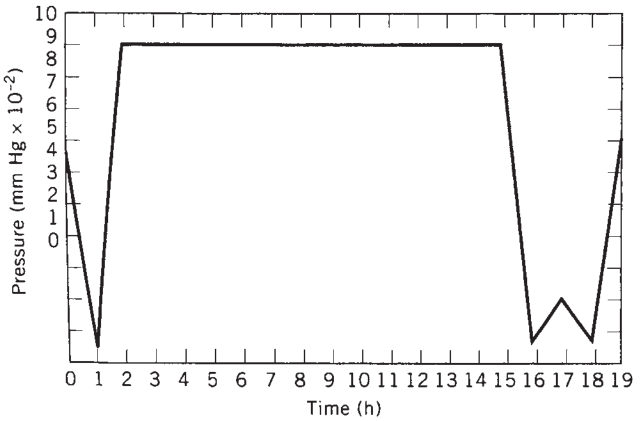

Figure 2. Changes in pressure in a typical EtO sterilization cycle.

that can be manipulated to alleviate the problem of package seal stress during sterilization:

1. *Porosity Rate of the Package.* The porosity rate of the package impacts on the stresses the seal face because, if the porosity is high, the change in relative pressures occur quickly and the package does not bellow out and stress the seals. If the package has a low porosity rate, the package tends to bellow out and stress the seal by the pressure exerted on the seal area. This property of the material can be measured by a porosity tester. Another solution is to increase the surface area of porous material and, by doing so, increase the total package porosity rate.
2. *Seal Aggression.* Another way to improve the seal's ability to survive stress is to increase the cohesive strength of the seal material. The aggressiveness of EVA seal material is designed so that the opening force of the package is low and the health-care professional does not have to struggle to open the package. The drawback of an easy-opening package is that the lower-aggression seals have a hard time surviving sterilizer stresses. It is possible to vary the vinyl acetate content of the copolymer from 14% to 40%. The higher the vinyl acetate content, the weaker the material's cohesive strength and the lower the seal strength. Another aspect of this seal-strength issue is that if the seal is too aggressive, it may cause the lidstock of the package to tear when opening, increasing the amount of airborne particle contaminants.

Steam Sterilization

The use of steam to sterilize devices is the oldest sterilization method and dates back to the time when devices were reusable and were sterilized in the hospital after each use. The process of using moist heat to kill microorganisms is a very effective system with a great deal of data available demonstrating its effectiveness. This process is very difficult to monitor because there are many variables to control, including temperature, moisture content, pressure, and time of exposure. This process is very similar to EtO in that the vacuum vessel is used and the differences in pressure are created to move the sterilizing agent into the packages. In this process the sterilizing agent is very hot steam, with temperatures in excess of 121°C. This process is common in most hospitals and in physicians' and dentists' offices. It is not used for many disposable devices because the temperatures required will soften and weaken most thermoplastic devices. Steam is most useful with glass and metal devices that can tolerate the extreme moist heat. Steam is not a major sterilization process in the disposable-device industry but is more an in-house system used by hospitals and medical offices on heat-tolerant products. The use of steam sterilization as an in-house system provides us with an example of packaging medical devices on a relatively small scale. This is accomplished by the hospitals purchasing premanufactured packages and loading the product into the three-sided pouch and sealing the pouch. This package must then withstand the rigors of a steam cycle and remain intact and provide a sterile barrier until the product is to be used. The advantages and disadvantages of steam sterilization are summarized in Table 1.

Table 1. Steam Sterilization

Advantages	Disadvantages
Highly effective	High heat exposure
Short product release time	Many variables
In-house process	High moisture
Low equipment cost	Package seal stress
	Package porosity requirements
	Labor cost to process

Effects on Materials. The materials used in packaging steam-sterilized items must be porous enough to allow for sterilization and be able to withstand high-moist heat. Steam has the ability to weaken papers because of the combination of heat and moisture, so paper packaging must be evaluated to determine the actual loss of material integrity. Steam does not have the problem of toxic residues found in packaging materials after sterilization because the mechanism of lethality to microorganisms is the high temperature rather than a toxic chemical. The greatest concern with thermoplastic packaging materials is their loss of physical properties on exposure to high temperatures during the cycle. Polyethylene and polystyrene have relatively low melt temperatures, so they soften at too low a temperature for usefulness. Polypropylene and polyesters have higher melt temperatures and may be more suitable for steam cycles.

Effects of Package. The package stress stems from exposure to pressure changes during the sterilization cycle. These stresses manifest themselves in the same package-seal problems occurring in EtO sterilization cycles. The difference in temperatures used between steam and EtO accounts for the greater severity of package stress with steam. Steam sterilization requires that the product reach a temperature of 121°C to be considered sterile. This high temperature weakens thermoplastic heat seals and packaging films. The required porosity eliminates most plastic films and makes paper a good choice. The one drawback with paper is that it will weaken when saturated with water and must be dried after sterilization.

Ethylene Oxide Sterilization

Ethylene oxide (EtO) is a chemical that, when in contact with biological systems, disrupts certain cellular activities interfering with the cell function, and in the case of small organisms, the result is death. The use of EtO in sterilizing medical devices is widespread, with approximately 45% of single-use devices using this method (3). This sterilization system is favored over steam for disposables because it employs a warm rather than hot environment and is not as temperature-aggressive to thermoplastics. The process involves, first, the prehumidification of the devices and packages prior to the sterilization cycle. This is done to activate any desiccated microorganisms because the chemical has a more effective kill rate on active microorganisms that are carrying out normal biological activities. This prehumidification process takes at least 9 h at 40°C and 65–80% relative humidity. After prehumidification, the devices are moved into a vacuum chamber. The products are still in their primary packages; and in most high-volume applications, corrugated cases of product are moved into the vacuum chamber still on pallets. In the vacuum chamber a vacuum is drawn and then held until the EtO gas is released into the evacuated chamber. The difference in pressure is the mechanism that draws the gas into the package and into the product where all surfaces that come in contact with the gas are sterilized. After a period of time, depending on the level of bioburden and complexity of the device design, another vacuum is drawn and the EtO gas is drawn out of the chamber. A series of vacuums and air flushes are performed to eliminate the EtO gas residuals from the product and the package. These pallets of products are then removed from the vacuum chamber and allowed to vent while samples are evaluated for sterility before the batch of product is released.

The effectiveness of this sterilization procedure relies on the package having the properties of porosity to EtO gas, heat and moisture resistance, and the ability to maintain a sterile barrier. The maintenance of a sterile barrier depends on the package material and heat seals remaining intact without breaches throughout the repeated vacuum and pressurization cycles.

Effects on Materials. The effect of EtO gas on materials is very well documented because this process has been widely used for years. The main concern has been the absorption of EtO and byproducts ethylene glycol and ethylene chlorohydrin by packaging materials (4). Medical papers and nonwoven materials such as Tyvek (manufactured by DuPont) are porous and do not retain EtO because they have ample surface area for the residuals to evaporate and elute. EtO residuals can be absorbed into plastics and exposure of the device manufacturer and healthcare workers to residual amounts of the chemical are a concern. There are differences between materials, but a basic rule is that thicker materials will tend to absorb more EtO than a thinner material and it is tougher for a thicker piece of material to elute EtO residuals.

Table 2. Ethylene Oxide Sterilization

Advantages	Disadvantages
Relatively effective	Toxic residuals
Relatively low heat (compared to steam)	Package porosity requirements
In-house process	Many variables to monitor
	Moderate heat
	Regulatory issues
	Moist process
	Long process time
	Long product release time
	Package seal stress
	Labor cost to process

Polyvinyl chloride will absorb twice the amount of EtO as polyethylene, polypropylene, and polystyrene (4). The longer the sterilization cycle (the longer a material is exposed to EtO), the greater the absorbency. The manufacturers who use EtO have designed aeration cycles during and after sterilization that reduce the residual problem. The residual issue continues to be monitored by the U.S. government regulatory agencies, and this issue has been instrumental in the increasing use of radiation as a sterilization process (3). The advantages and disadvantages of EtO sterilization are summarized in Table 2.

Effects of Package. The effects of an EtO sterilization cycle is more apparent on the package than on the materials used in that package. The package effects center on the ability of the package, as a combination of materials assembled together, to maintain a sterile barrier:

1. *Package Stress.* The package stress comes from the evacuation cycles during sterilization. The quick changes in pressure have a bellows effect on the heat seals. This effect is to blow the package up and stress the package seal. This stress is compounded by the fact that the plastic used for a heat-seal material is chosen for its low melt temperature and low cohesive force. The package must survive stress on the seals at temperature conditions that have already weakened the heat-seal material. The most challenging part of packaging for EtO-sterilized packages is that the package has to encounter stress when the heat seals are in a preweakened warm condition. The packaging engineer is caught between creating a strong, aggressive seal to withstand sterilization and creating a weak, easy-open seal to facilitate a sterile removal of the product from the package. The seal weakening from

evacuation and pressure cycles is referred to as "CREEP." This is recognized by a scalloped area along the seal that reduces the seal width and also the seal strength at that point. The problem with a seal weakened during sterilization is that during normal distribution the seal may see additional stress that may exceed the compromised seal strength and cause it to open, compromising the sterile integrity of the package. The scalloped void in the seal can also actually be as wide as the seal, breaching integrity and creating an opening for microorganisms to enter.

2. *Packaging Design to Aid in Penetration.* The effectiveness of EtO sterilization lies in the ability of the cycle to drive the gas into the package and contact the product. It is difficult for the gas to reach sealed chambers in the product and other areas that do not allow for airflow. Also, packages utilizing foam inserts are particularly difficult to sterilize because the volume of air in the foam materials is difficult to remove and impacts on sterilizer effectiveness (5). The package can be designed with large areas of porous material to improve the air-flow characteristics of the package. This is necessary with blisters that have only one side that is porous, and "Schuster" or "header" pouches that reduce the surface area of porous materials used in the package because their design allows a minimal amountof porous material (6).

Radiation Sterilization

Currently there are two popular methods of generating radiation energy used to sterilize medical devices. Each delivers the same effect, but they differ in mechanism of delivering the energy. It is these differences that drive the specific applications of each system now and in the future.

Gamma Sterilization. With gamma sterilization the products are sterilized by action of exposing the packaged product to a decaying isotope, usually cobalt-60 (^{60}Co). The γ-photon particles bombard the item and excite electrons, causing them to break apart from their existing positions. These ionized particles break other chemical bonds, causing material and biological damage. This damage is what kills microorganisms by disrupting cellular systems. Gamma particles are large, and because of their size and mass, can travel relatively far distances. This means that the source can be located yards away from the product and still receive an effective dose. Gamma sterilization requires a large technical facility requiring a large capital investment. These facilities are generally owned by companies whose business it is to expose items to radiation through this process. The process can achieve either (a) lethal doses as in the case of medical devices or (b) sublethal doses as in the case of food products (7). The sublethal process is exposure to much lower doses. The process variables in this procedure are few and microbial kill effectiveness is high, accounting for high reliability in the procedure. The sterilization takes place at ambient conditions, so the effects of high temperature and humidity in steam and EtO sterilization cycles are not factors affecting package integrity. Gamma is characterized by very high penetration, which is one reason for its high reliability of kill rate. The time for a sterilization cycle is about 6–9 h at a normal dose rate of 4 kGy/h. The recognized average dose for sterilization is 2.5 Mrad or 25 kGy. A gamma cycle will guarantee exposure to at least 2.5 Mrad, but in order to do so, actual doses will exceed that minimum. The advantages and disadvantages of gamma sterilization are summarized in Table 3.

Table 3. Gamma Sterilization

Advantages	Disadvantages
Effective kill	Costly facility
Few variables	Degrades materials
High-volume cost-efficient	Facility location not always convenient
No residuals	Effects are cumulative
No heat	Variability in dose
Short product release time	Long process time

Electron-Beam (E-Beam) Sterilization. E-beam sterilization is a lower energy system than gamma and has particular advantages in particular applications. This system excites electrons in an electron accelerator and then bombards the package and product with these excited electrons. The free electrons then break other chemical bonds and cause biological damage. The similarity between gamma and E-beam is the use of electrons to effect sterilization; the difference is how the electrons are excited. A gamma particle is much heavier than an electron, so the gamma particle can travel farther and still have the energy left to excite and ionize compounds. Electrons, on the other hand, have very small masses and lose energy quickly, so the effective use of excited electrons occurs relatively close to the source. This distance is less than 12 in. for high-energy accelerators (8). The advantage of E-beam sterilization is that a large facility is not needed and consequently does not require as large a capital expense as gamma. The electron accelerator can be placed in a production line with appropriate shields employed.

The use of electron accelerators is not new in the device industry. Johnson and Johnson was one of the first to use this technique as far back as the 1960s (3). Currently the technology is used for such varied applications as (a) dosing polyester tennis strings to improve the tensile strength and (b) curing inks and varnishes. The latter is currently more common in Europe. There are currently electron accelerators capable of producing 2–12 MeV of energy. The lower energy is used mostly to cure inks and varnishes, but this energy level is capable of producing a sterile field within 1 in. of the source. This system has potential for sterilizing very low-profile medical devices (9). At these low energy levels, little shielding is required because the energy is lost over small distances. This fact, along with the short time required to dose the product, would make this process a possible in-line operation. The 10 to 12–MeV accelerators are being used currently in the industry to sterilize cases of products and have a penetration of roughly 1 MeV to 0.8 cm. These higher-energy systems require shielding, but this is being accomplished by subtle design changes to the production line so the product can be sterilized in-line. Figure 3 shows an E-beam accelerator being used in-line to sterilize medical devices. Figure 4 shows a high-energy electron accelerator sterilizing bottle caps. The advantages and disadvantages of E-beam sterilization are summarized in Table 4.

Effects on Materials. The material changes in packages exposed to radiation vary quite a bit. Some materials have little change even when exposed to large doses of energy, while other materials show profound effect with small energy levels. The effects of radiation on materials has been fairly well documented by research done by the U.S. government and different private device companies (10). The materials that are used in the majority of device packages are generally low-cost common plastics and papers, and consequently any method of limiting these effects must be cost-effective.

Plastics are affected several ways when exposed to doses of radiation. The polymer chains exhibit scission and cross-linking, gas elution, and discoloration. The dominant effect depends on the particular material. The effect on materials has been shown to be dose-dependent and cumulative. The effects are increased by repeated exposure from multiple sterilization cycles. Most packaging plastics are very resistant to radiation energies at the levels used for sterilization, but two common materials exhibit significant property changes. It is interesting that two different materials show profound changes at low-level energy exposure. Figure 5 shows the effects of different doses of energy on the tensile strength of plastic films commonly used as packaging materials. Polypropylene (PP) and polyvinyl chloride (PVC) are two common materials used to make devices and packages that exhibit acute reactions to low levels of energy. At very low doses, polypropylene will turn brittle, lose flexibility, and discolor, turning yellow. Polypropylene shows significant loss in mechanical strength at energy levels used in radiation

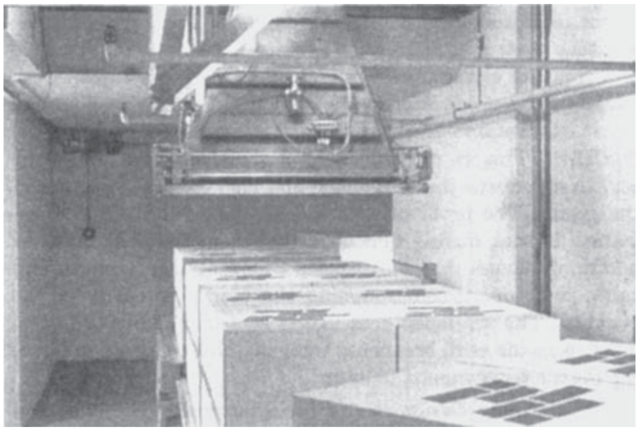

Figure 3. High-energy electron accelerator sterilizing cases of medical devices. (Photograph provided by AECL Accelerators, Ontario, Canada.)

Table 4. Electron-Beam Sterilization

Advantages	Disadvantages
Low heat	Degrades some materials
In-line process	Low penetration
Highly effective	High-energy systems require shielding
Few variables	
Quick process time	
Short release time	
Low equipment cost	
Controlled dose	

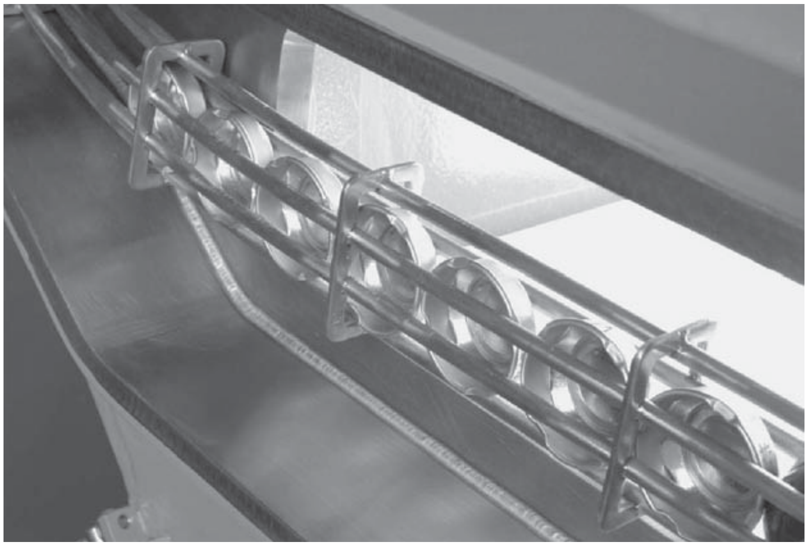

Figure 4. High-energy electron accelerator sterilizing bottle caps. (Photograph provided by Advanced Electron Beams, Inc. Wilmington, MA.)

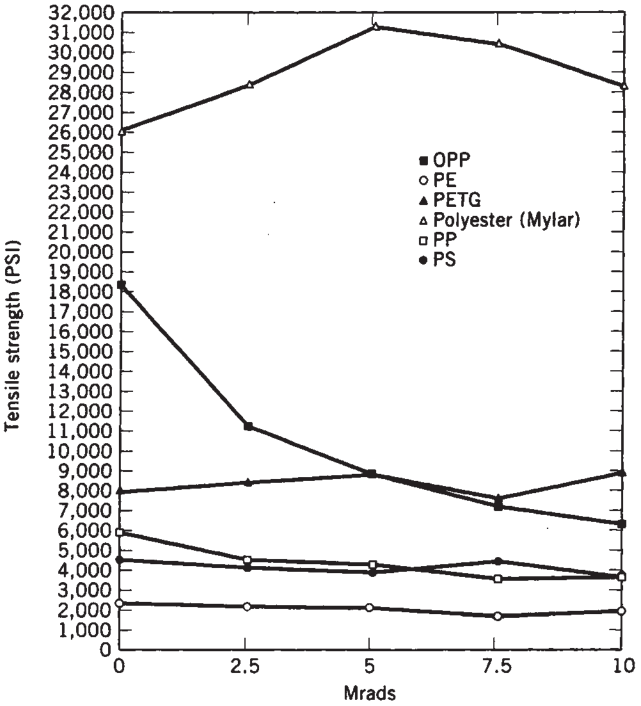

Figure 5. Tensile strengths of packaging films after exposure to low-level radiation.

Table 5. Effects of Radiation on the WVTR of Packaging Materials Tested [g/(100 in.^{2} 24 h) at 100 °F, 90% rh]

Materials (Mrad)	0	2.5	5.0	7.5	10.0
PETG	1.42	1.52	1.57	1.76	1.73
PET/PE	0.46	0.48	0.50	0.55	0.57
PP	0.19	0.21	0.21	0.23	0.24
OPP	0.30	0.33	0.33	0.35	0.37
PE	0.12	0.13	0.15	0.15	0.13
PET	0.25	0.28	0.28	0.29	0.28
Nylon/PE	0.26	0.29	0.34	0.37	0.37

sterilization. Polyvinyl chloride shows a reaction to radiation at low levels by turning amber and eluting gas. The significant change in mechanical properties in PVC occurs at higher energy doses, around 100 Mrad (11).

In contrast, polyester films show change due to exposure by increasing tensile strength (12). The tensile strength increase is dose-dependent over 0–5 Mrad and then begins to reduce with increased exposure. Even at 12.5 Mrad the tensile strength of the sample is greater than the original, untreated sample as shown in Figure 5. This is a desirable property change in applications where tensile strength is desirable. Polyester tennis strings produced by a company named Gamma Gut are dosed by gamma radiation to increase their tensile strength, which is a quality necessary for tennis strings. The company even identifies the process in the corporate name.

In addition to the mechanical properties changing, the barrier properties of a material are also at risk. PETG, PP, and nylon show significant loss of water-vapor-barrier qualities when exposed to sterilizing doses of radiation. These effects have been demonstrated to be dose-dependent, so the greater the dose, the more pronounced the effect (13). It is speculated that the effect comes from the restructuring of the polymer chains, allowing more area for water molecule transport. Table 5 shows the WVTR values of various packaging films at different energy doses.

The stabilization of these polymers to the radiation levels seen in sterilization cycles is being accomplished by the use of various additives. The additives are designed to either react with the energy before it damages the material or absorb the energy before it energizes the material. These additives are specially formulated for the particular application because their compatibility with a product is a key consideration. PVC is modified with lead carbonate or organic tin compounds, and this change reduces the discoloration in the material (14).

Effects of Package. The effects on package integrity are secondary to the effects of material integrity. There is no elevated temperature to soften plastics, and there is no evacuation cycle to stress the package seals. The embrittlement of a material is the key issue because if a package material is flexed and cracks, the sterile integrity of the package is compromised and the product is viewed as contaminated and unusable. Stresses encountered during distribution take on greater importance when materials have become brittle, so effective distribution testing is prudent.

Shelf Life of Device Packages. The shelf life of a device package is expressed as the length of time the package will provide a sterile barrier. The shelf life has traditionally been defined as only an event-related process where events such as rough handling contribute to premature aging of the package. Current research has indicated that time is also a factor in device shelf life. There has been evidence to suggest that material changes may occur during poststerilization storage. These changes are the same as those that occur immediately after sterilization but seemingly increase over time. One study has shown that aged EVA heatseals on porous packages sterilized by EtO have significantly lower seal strengths than the same packages immediately after sterilization (15). Other observed effects are discoloration and increasing brittleness of materials sterilized by radiation. These few observations make a case for increasing attention on poststorage testing of the packages so that more can be learned about the impact of sterilization method on shelf life (see also Shelf life).

BIBLIOGRAPHY

1. F. Yambrach, *Med. Device Diagn. Indust.* **28**(1), 134 (2006).
2. C. Henke, *Med. Device Diagn. Indust.* **14**(12), 41 (1992).
3. A. F. Booth, *Med. Device Diagn. Indust.* **17**(2), 64 (1995).

4. *Industrial Sterilization*, Duke University Press, Durham, NC, 1973; B-D International Industrial Sterilization Symposium, 1972 Amsterdam, Netherlands.
5. R. R. Reicht and D. J. Burgess, *Med. Device Diagn. Indust.* **13**(1), 124 (1991).
6. C. Marotta, *Med. Device Diagn. Indust.* **6**(2), 27 (1984).
7. G. G. Giddings, "Irradiation of Packaging Materials and Prepackaged Foods" in *Proceedings from the 4th International Conference on Packaging*, September 1985.
8. J. W. Barnard, *Med. Device Technol.* (1991).
9. J. N. Aaronson and S. V. Nablo, "The Application of Electron Sterilization for Devices and Containers," paper presented at TAPPI Polymers, Laminations and Coatings Conference, 1986.
10. J. J. Killoran, *Radiat. Res. Rev.* **3,** 369–388 (1972).
11. W. E. Skeins, *Radiat. Phys. Chem.* **15,** 47–57 (1980).
12. V. Pungthong, *Mechanical Properties of Polymeric Packaging Films After Radiation Sterilization*, M.S. thesis, Rochester Institute of Technology, 1990.
13. R. L. A. Vas, *Effects of Low Level Radiation on WVTR of Plastic Packaging Films*, M.S. thesis, Rochester Institute of Technology, 1989.
14. M. Foure and P. Rakita, *Med. Device Diagn. Indust.* **5**(12), 33 (1983).
15. A. T. Cook, *The Effect of Accelerated Aging on Peelable Medical Product Heatseals*, M.S. thesis, Rochester Institute of Technology, 1994.

PACKAGING DESIGN AND DEVELOPMENT

Laura Bix
Javier de la Fuente
Raghav Prashant Sundar
Hugh Lockhart
School of Packaging, Michigan
State University, East Lansing,
Michigan

INTRODUCTION

Packaging is ubiquitous, yet invisible to many who use it. It is present in almost all environments and facets of modern day life, though few people give it any purposeful thought. Hospitals, military outposts, construction sites, industrial manufacturing facilities, retail outlets, and restaurants (to name a few) all have personnel that interface with packaging. It permeates our homes, businesses, churches, and schools and utilizes nearly every material known, taking on many different forms and functions.

It is challenging, in a single chapter, to discuss effective package design in great detail due to the myriad of products in need of packaging and complexity of stakeholder desires. However, there are certain basic considerations that designers should contemplate, regardless of the product to be packaged or the packaging form to be employed.

STAKEHOLDER PERSPECTIVES ON PACKAGING

Effective designers consider multiple inputs and desires from varying stakeholders (see Figure 1), throughout the life cycle of a package (from ingredients through disposal), though many times these stakeholders don't even realize that their expectations for a product are achieved by thoughtful package design.

Converters and fillers expect that packages will be easy to produce, fill, process, evaluate, handle, ship, store, and track. The idea is to maximize production efficiencies (line speeds, cube efficiencies, inventory control, and the like) without imposing unnecessary burden on workers. Both groups wish for products and packages that will satisfy downstream customers' (particularly sellers and end consumers—see Figure 1) wants and desires, creating the opportunity for more orders and more profit. Perhaps one of the greatest motivators of package design decisions, particularly for fillers, is the need to effectively brand their products. With the fragmentation of traditional media sources and the advent of technologies like satellite radio and TiVo®, which allow consumers to filter advertisements, packaging takes on a more prominent role in attracting and retaining consumers. Distinguishing features such as logos, wordmarks, colors, and functionality are vital parts of this effort, and packaging is increasingly seen as a tool for adding value.

A variety of sellers (retailers, internet businesses, hospitals, pharmacies, restaurants, etc.) have many expectations as well. They expect affordable products that will arrive in a pristine, genuine, shelf-ready condition with maximum shelf life and features that make tampering evident. For many, packaging is part of loss prevention programs which are meant to deter and detect theft, a noted and costly problem (1). Certain sellers, like hospitals and other healthcare facilities, desire packages that readily identify contents when seconds count. They place emphasis on the directions, and in some cases warnings; designs that facilitate the safe and effective use of the contents within are a priority. Other sellers (retailers) still emphasize the importance of products that are easily identified, but with the purpose of attracting consumers for sale. Sellers also desire packages that are easily integrated into their systems which track inventory, so that billing, ordering, and, occasionally, recall, are efficient and cost-effective.

End consumers want to be able to easily identify a safe and affordable product that has arrived intact with maximum shelf life remaining. They prefer things that are easily opened, dispensed, and stored and express frustration when designers do not consider their needs. With increasing frequency, they express concerns regarding the sustainability of packaged goods. Many end-users desire products that have considered the social, economic, and ecological impact of design choices on the world, with designs that have zero or positive impacts being preferred. To further complicate the considerations, end-users come with preconceived notions about what packaging is appropriate for a given product. For instance, Americans were very slow to embrace the concept of wine in anything but a glass bottle with a cork until recently, and they are just

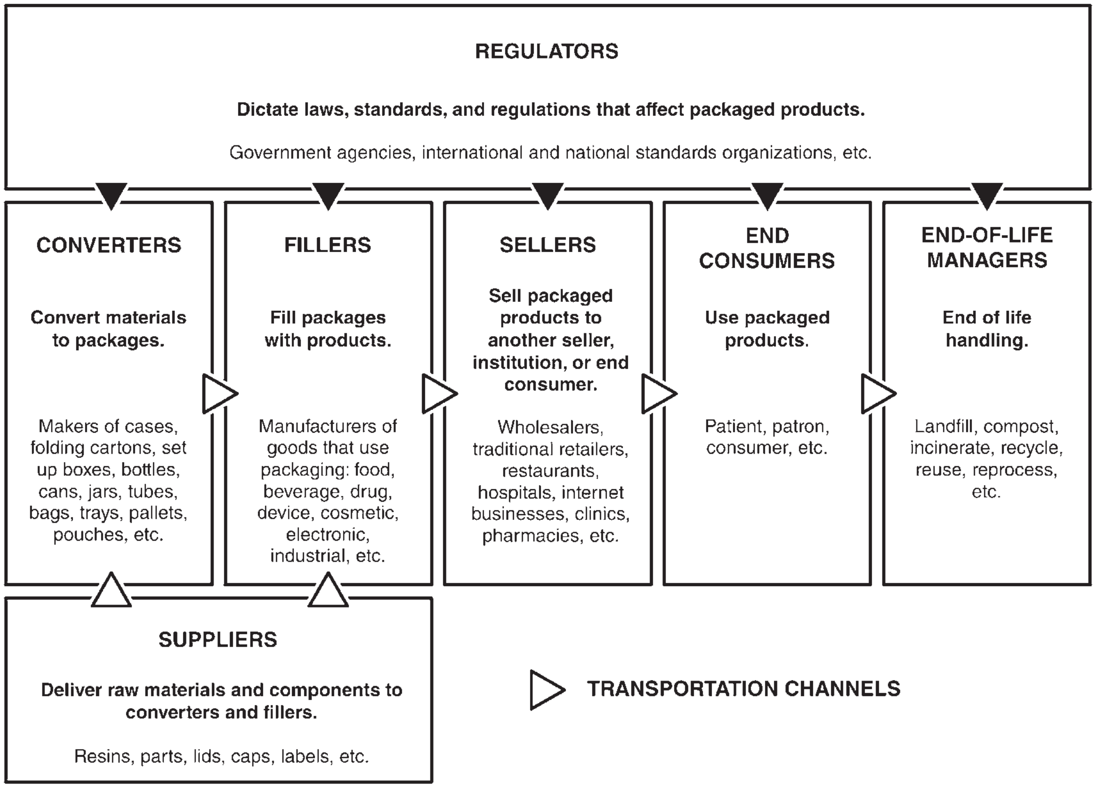

Figure 1. Packaging supply chain stakeholders.

beginning to accept bag-in-box systems and canned wine. These conceptions are filtered through a cultural lens, so as the marketplace becomes more global in nature, so, too, does understanding how a design will be perceived and embraced by the end-user. The rising globality of the marketplace further complicates design decisions, as the varying systems for distribution, storage, and handling are not standardized and large distances, coupled with multiple hand-offs, allow for problems with product security.

It is for this reason that, with increasing frequency, manufacturers, regulators, and standards organizations are integrating automatic identification (auto-ID) and authentication technologies into package designs. Frequently, technologies like bar codes and radio-frequency identification (RFID) are being included in package systems in an attempt to provide a complete history regarding the product's origin, location, and conditions of handling. Overt, covert, and forensic technologies are commonly imbedded into packaging components in order to deter and detect illicit activities (counterfeiting, up-labeling, etc.) as well as authenticate genuine product.

Finally, at the very end of the stream are those that deal with the issues of disposal, the end-of-life managers (see Figure 1). They, too, have desires for packaging. Packaging can end its life by being reused, either in the same fashion as it was used to begin with (a returnable, refillable bottle) or in a new way (a bottle that becomes a vase). Packages that are to be reused in the same way must be capable of withstanding the processing necessary to ensure that they are as safe and effective the second time around as they were the first. Those that are reused for different purposes must suggest to the end-user (either subtly or directly) that reuse of this item is an attractive option.

A number of systems exist where packaging is processed at the end of its life to become something else. Recycling reprocesses the materials present into new forms. Composting breaks the materials down into basic components. Incineration captures the energy released as the package is burned. Finally, packages may end up in the solid waste stream, where they are land-filled.

Regardless of the process employed, end-of-life managers desire package designs that can easily and safely be integrated into existing systems for the collection and processing of the materials. Designs must effectively utilize appropriate disposal mechanisms and convey to both the end-user and the disposal facility any necessary steps to be taken (e.g., the classification of the materials and separation of components).

Clearly, the considerations and decisions that astute packaging designers regard are vast, and different products and stakeholders require emphasis on varying aspects of the design.

THE LOCKHART PACKAGING MATRIX

The Lockhart Packaging Matrix is a tool that allows designers to consider numerous design decisions and

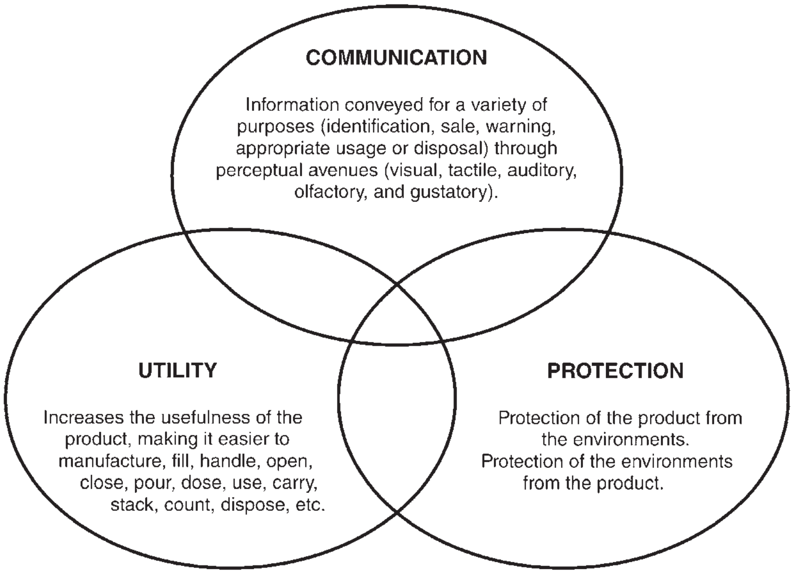

Figure 2. The functions that packaging must perform.

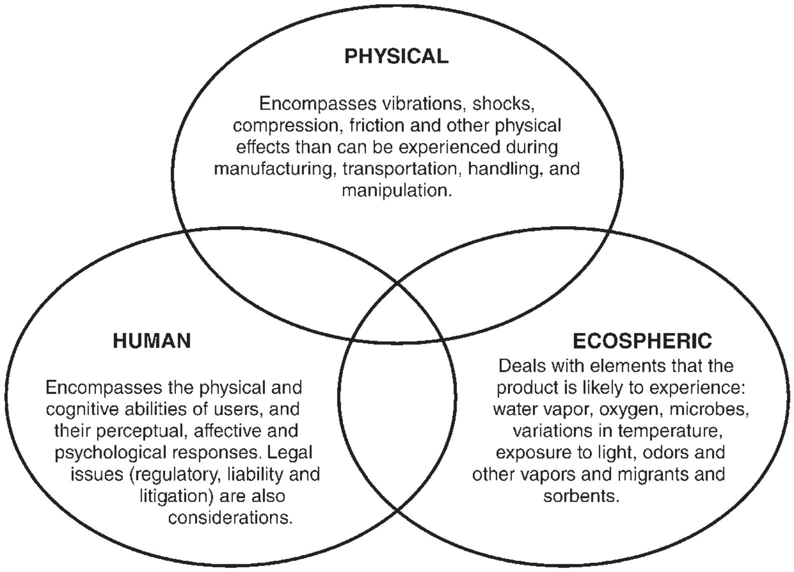

Figure 3. The environments in which functions must be performed.

stakeholder perspectives in an organized fashion (2). It considers packaging to be a socioeconomic discipline that must perform three main functions—protection, utility, and communication (see Figure 2)—in three environments: the physical, ecospheric, and human (see Figure 3). These functions and environments frequently exert their effects simultaneously, though the matrix separates them for ease of understanding.

When all functions and environments are considered, packaging is not just a means to protect or contain the product, but also has the potential to impact the decisions and lives of those interfacing with it throughout the chain (see Figure 1). The Lockhart matrix presents, visually, a way to manage the intersections of function and environment that occur (see Figure 4).

The challenge to designers when using the matrix is to simultaneously consider all nine intersections of the matrix from the perspectives of the many, varying members of the supply chain (see Figure 1); optimal decisions will maximize all intersections without suboptimizing others. For instance, consider a package that contains a prescription drug. By focusing solely on the category of human/protection, a child-resistant container that is impervious to all children might be created. The system is suboptimized, however, if this comes at the cost of any senior being able to access their medications; suboptimization of the human/utility interface of the matrix (see Figure 4).

HISTORICAL EMPHASIS OF PACKAGING SCIENCE

Because packaging is a fledgling discipline, not all areas of the matrix have received the same level of scientific

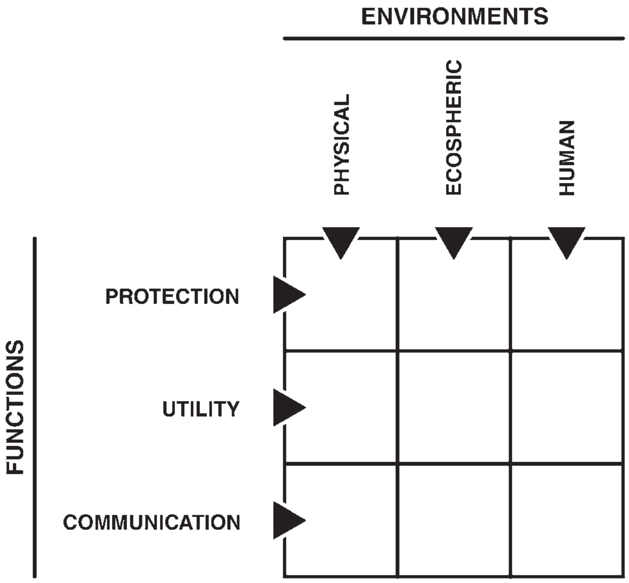

Figure 4. The Lockhart packaging matrix.

investigation. Consider the level of science that has been applied across the three environments (ecosphere, physical, and human; see Figure 4). The ecospheric environment and the physical environment each have a considerable history of scientific exploration which has resulted in standardized test methodologies, predictive models, and design innovations.

In the ecospheric environment, the role of packaging as a barrier to deterioration (from air, water, light, temperature, and living organisms) is well known. Material and packaging innovations in this arena have seen tremendous growth and development, and they range from the simple to complex. Society has been the benefactor of developments such as: amber glass and canning; the creation of polymers that allow for less breakage and lighter packages than glass or metal; the incorporation of additives that extend the shelf life of products by scavenging oxygen or killing microbes; and the emerging introduction of nanocomposites, to name a few.

Science was, and continues to be, used to catalyze and inform these innovations. Fickian models can be used to explain the transfer of molecules through barrier systems, and sorption moisture isotherms characterize product delicacies; this information can be coupled to predict and understand the resultant shelf life of products through the use of multiple test standards (see Shelf life, Testing, Permeation, and Leakage). Solubility parameters can be calculated to predict the likelihood of product/package interaction. "Active packaging" (3) manipulates and reacts to the internal and external environment to achieve a desired goal for the product (generally extension of shelf life). Chemical engineers and material scientists have worked to understand the "weak links" that can be manipulated in material chemistries in order to create polymers that are biodegradable or readily compostable.

Like the ecosphere, the physical environment has been the benefactor of attentive scientists and engineers during the years that packaging has been formally studied. Accelerometers that can "map" physical conditions and shock indicators that trigger a warning of potential damage have been developed to provide information to designers and end-consumers. Testing agencies and research teams are capable of estimating component fragility so that product and package design can be manipulated to mitigate the probability of damage. This information can be coupled with damage boundary curves and cushion curves in order to help designers maximize protection and minimize cost. All of these approaches rely on sophisticated equipment and test standards (see Distribution Hazard Measurement, Logistical/Distribution Packaging) that have been put in place over the years.

Obviously, packaging research has optimized performance by providing science that garners insights into the interactions between product and package when the ecospheric and physical environments are considered. However, the lack of this same degree of attention and quantification of the human environment represents a real opportunity for packaging designers, particularly as the global population ages.

We submit that optimal designs consider the product and the user (all three environments; see Figure 4) from all stakeholder perspectives (see Figure 1). This is not the traditional approach to design, which generally centers on either the product or user as the focus of the decision making process.

PRODUCT-CENTERED DESIGN (PCD) VERSUS USER-CENTERED DESIGN (UCD)

In a product-centered design (PCD) process, designers focus first on the technological development of the package while considering product and production requirements, after which point they address user functionality. The traditional approach to packaging design has been largely PCD, with concerns about the ability to efficiently fill, protect, and distribute products driving most design decisions.

By contrast, a user-centered design (UCD) process first considers the needs and wants of the user. The users' functional capabilities determine which product features are satisfactory. For instance, if it is known that a user can only exert a certain force, any design that requires a force beyond that limit will be disallowed from consideration.

We suggest that truly optimal designs consider all viewpoints, a combination of PCD and UCD processes. During the entire process the design team must attempt to balance requirements of the three environments (physical, ecospheric, and human) and the three functions (protection, utility, and communication) described earlier from varying stakeholder perspectives (see Figure 1–4). Though all intersections of the matrix may not be given equal credence for all products and stakeholders, all are considered and, if under- or disregarded, the decision to do so is deliberate.

PACKAGING DESIGN AND DEVELOPMENT—CONSIDERING ALL PERSPECTIVES

A packaging project is quite unique in the sense that it encompasses both the design of three-dimensional components and the design of two-dimensional elements to perform the functions of protection, utility, and communication in the varying environments. Usually, the end result takes the form of a multicomponent system that includes primary, secondary, and tertiary packaging. Because of its interdisciplinary nature, the development process affects all functions in an organization. Research, sales, finance, legal, and the general management are involved, but of particular importance are the functions of marketing, design, and manufacturing because of their continuous involvement along the entire process. It is for these reasons that it is assumed that the design team will have representatives from the latter areas.

There are many design and development processes described in the literature (4–6). Even though some of them do not specifically consider the design of packages, from a broad perspective they all have conceptual similarities. Regardless of the type of packaging system, a design project has four typical stages: research, design, development, and manufacturing. We present a six-phase, comprehensive methodology adapted from Ulrich and Eppinger (5) for developing packaging systems (see Figure 5).

The output of each phase is evaluated to determine what design features move forward in the process. Evaluations take the form of testing (mechanical and chemical), user assessment, and/or internal assessment. The process is iterative and usually bidirectional, meaning that information gathered in later phases can be used to modify and feed early stages (see Figure 5). The process' phases are defined in terms of the state of the packaging system being developed. They are as follows:

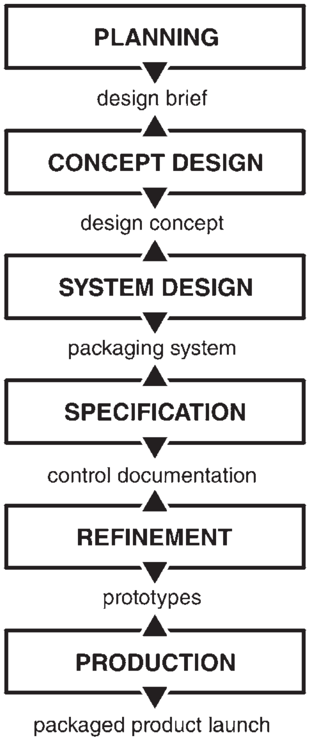

Figure 5. A generic packaging design and development process. (Adapted from Ref. (5).)

1. Planning
2. Concept design
3. System design
4. Specification
5. Refinement
6. Production

1. Planning. The objective of the planning phase is to formulate a *mission statement* or *design brief* that includes identification of target segments, businesses goals, stakeholders (see Figure 1), assumptions, and both product-centered and user-centered restrictions. The inputs of this phase take into account the corporate strategy, an assessment of available technology, and market objectives.

2. Concept Design. During the concept design stage, several packaging concepts are generated and evaluated, and one or more are selected for additional development and testing. A concept is a description of shapes, functions, and features which are intended to fulfill the expectations generated, as expressed in the design brief. Concept ideation is a complex task that implies several interconnected activities which include:

a. Identifying Product and User Needs and Requirements. The first activity is directed at recording the varying requirements, needs, and desires for the package system and communicating these to the development team and members of the organization. The packaging matrix (see Figure 4) can be used extensively in understanding and prioritizing these requirements. The output of this step is a hierarchical list of need statements with importance weightings.

Activities carried out at this point include:

- Identification of stakeholder needs
- Identification of product requirements
- Data gathering from stakeholders and product
- Prioritization of the stakeholder needs and product requirements
- Development of design parameters based on collected data
- Interpretation of raw data in terms of stakeholder needs and product requirements.

It is very important to identify the requirements of the product and the varying stakeholders. Be aware that product and stakeholder requirements may be juxtaposed and that varying stakeholders are likely to place emphasis on differing sections of the packaging matrix. As such, prioritization is a crucial piece of the process.

To illustrate this, consider a prescription drug. Product protection requirements may dictate the use of an opaque or amber package (ecospheric/protection), but manufacturing may desire a clear material so that a vision system can verify the presence of the pill in the blister cavity (physical/utility). Similarly, stakeholders may have different desires. Pharmacists have unique requirements in terms of cost, storage, labeling, and filling operations, but those needs may be very different from those of the end-users.

Once the product requirements (physical and ecospheric) and the stakeholders' needs and requirements (human) have been identified, the team must gather data in order to inform the design of the package. Product-driven data may include: isotherms; chemical assays that look at sensitivities; stability studies; fragility data; characterization of the distribution environment (relative humidity levels, typical temperatures, as well as shocks and vibrations likely to be encountered); and limitations imposed by the manufacturing process and distribution systems. End-user insights may include data collected from interviews, focus groups, ethnography, and use; end-users may also be characterized by demographics, psychographics, and anthropometrics, as well as in terms of their physical capabilities (strength, range of motion, visual acuity, etc.).

The next step is to design parameters from the raw data. At this point in the process, the parameters are described in terms of what the packaging has to do, as opposed to prescriptive solutions. Design parameters are then organized into a hierarchy and grouped in primary, secondary, and even tertiary priorities. To establish the relative importance of the parameters, the design team can rely on its own knowledge about the user and product; they can overpackage, or they can conduct fact-finding to gather further information. There is a natural tradeoff between the approaches: cost, speed, and accuracy. Relying on internal knowledge can aid in speed to market and be cost effective, but can be detrimental in terms of accuracy. Overpackaging, or overdelivering, can also aid in speed to market, but can be costly in the long term; mining more data to inform decisions can slow the process, but can result in a more informed, cost-effective solution.

b. Setting Target Specifications. Prioritized design parameters are then translated into target specifications. These are measurable and precise descriptions of what the packaging has to do. Target specifications represent goals that, later in the process, can be readjusted in the event of unforeseen constraints (i.e., technological, economic, etc.). The process of establishing specifications involves the selection of metrics, collection of competitive benchmarking data, and the setup of ideal and acceptable target values.

To illustrate this concept, consider a product that has a design parameter indicating it to be moisture-sensitive. In this step, the parameter is translated into a target specification, a specific requirement for the maximum allowable rate of moisture vapor transmission. The same type of transition occurs with design parameters that relate to user needs. The design parameter "easy opening" can be translated into target specifications relating to package diameter, maximum allowable torque, and coefficients of friction between cap and hand, or the team could just decide a percentage of opening success among the target population.

c. Concept Generation. Target specifications are synthesized into a set of packaging concepts from which the team will make a final selection. The basic idea is to exhaustively explore design solutions in order to reduce the probability of finding a better alternative late in the development process or, even worse, having a competitor find one.

d. Concept Selection. The design team will use some kind of method for selecting concepts. The approach to concept selection can be either intuitive or structured and can include:

- *An External Decision*. A customer or client makes the selection.
- *Product Champion*. A member of the team makes a selection based on personal preference.
- *Intuition*. A concept is selected by its feel.
- *Multivoting*. Team members vote for multiple designs (i.e., "vote for your top 3"). Each round, a pre-determined number of designs are forwarded for more voting, and votes are cast again ("vote for your top 2"). This process continues until the design(s) is chosen.
- *Pros and Cons*. The team chooses a concept based on a list of strengths and weaknesses of each concept.
- *Prototype and Test*. The team builds and test prototypes of each concept and makes a selection based upon test data.
- *Decision Matrices*. The team evaluates each concept with respect to a set of selection criteria. Criteria are based on previously discussed design priorities.

More structured methods provide objectivity throughout the concept design phase and help to evaluate concepts scientifically. Concepts are examined scientifically to determine if they meet or exceed the needs and requirements of the product and varying stakeholders and the selection is made based on objective results. New concepts are also evaluated and benchmarked against the existing competition.

e. Concept Testing. Selected concepts are evaluated by potential users in the target market and subjected to appropriate laboratory testing. These activities involve:

1. Defining the purpose of the test: the team needs to define what questions will be answered with the testing.
2. Selecting test conditions:
    - In the case of user focused testing, it is assumed that a sample population will reflect the target

population. Testing can be conducted in a variety of ways, including ethnographic research, surveys, face-to-face interviews, telephone interviews, postal or electronic mail, and over the internet. Concepts can be communicated in many ways with different levels of description. These include: verbal description, sketches, photos, videos, physical appearance models, and working prototypes.

- In the case of pilot scale manufacturing, it is assumed that incoming lots will reflect the variability of materials, line speeds, and other manufacturing parameters.
- In the case of stability testing, it is assumed that conditions of test will be carefully chosen to reflect, or accelerate, appropriate conditions of storage and use.
- As with the other testing, physical testing will be purposefully constructed so that conditions accurately reflect handling and storage throughout distribution channels.

3. Measurement of responses.
4. Analysis, interpretation of results, and selection of a final concept.

f. Setting Final Specifications. Based on the final concept, the team will be able to confirm or revise specifications. This is done by conducting a terminal evaluation which, again, considers the broad spectrum of stakeholder requirements with a heavy emphasis on technological restrictions and manufacturing costs. During this phase, the design team must perform a balancing act that considers the myriad of requirements from the varying user perspectives to arrive at the optimal package design for the entire system. As such, the final specification process calls for an active involvement of team members representing marketing, design, and manufacturing functions of the organization.

3. System Design. This phase includes the definition of all packaging system components and parts. The outcome includes a geometric layout of the system, functional specifications for each part, and a process flow diagram for the production and packaging lines.

4. Specification. The output of this phase is the *control documentation* for the entire packaging system, as approved by the respective areas (i.e., structural, graphics, scheduling, manufacturing, marketing, customer service, the filler, etc.). For the graphic elements of the system, this phase implies the preparation of the final art work. There are a multitude of possibilities, but it could include adequate color separation for the printing system chosen, photography at sufficient resolution, die lines, overprints, illustrations, fonts, code bars, final identification suppliers for components and substrates, specifications for spot ultraviolet coating (varnish or lacquer), embossing/debossing, foil stamping, matt/glossy finish, and so on. For the structural parts of the system, specifications include detailed descriptions of geometry, tolerances, materials, and manufacturing processes of all components as well as production tooling. It also identifies any standard parts to be acquired from suppliers.

5. Refinement. The refinement phase involves the evaluation of preproduction versions of all packaging system parts and the final assembly. Typically, two types of prototypes are used here: *alpha* and *beta*. *Alpha* prototypes are early versions of the packaging system; they have the same geometry and material properties as intended for the production version parts, but they may or may not be fabricated using the actual production process. *Alpha* prototypes are used to determine if the design will work as intended, fullfilling key stakeholder's needs and requirements. *Beta* prototypes are built with parts produced with the intended manufacturing processes, but their assembly might not be performed using the final assembling process. *Beta* prototypes are evaluated by the team and by different stakeholders to identify whether engineering changes are needed for the final packaging system.

6. Production. During this phase, the packaging system is produced on the final packaging line using actual packaging components and parts. Packaged products are evaluated using carefully constructed sampling plans to determine the process' ability to produce within specified tolerances and to adjust the parameters of manufacture. There is a gradual transition to full blown production. At some point during this phase the final packaged product is launched and distributed.

CONCLUSIONS

Seller and end-user trial, satisfaction, and repeat purchase may be a direct function of packaging for many consumer non-durables and perhaps for some durables as well. The three functions of packaging (protection, communication, and utility) play a key role in achieving success.

Packaging that fails to fully protect the product has the potential to result in excess damage and waste, diminished shelf life, and loss of flavor or efficacy. Problems associated with insufficient protection are likely to lead to customer dissatisfaction and negative word-of-mouth advertising. Likewise, packaging that fails to communicate its marketing positioning, to differentiate from its competitors, and to connect emotionally with consumers will result negatively on the bottom line. Packaging that does not provide the expected utility will put off consumers. The product/package system must generate satisfaction, and poorly designed packages have the potential fail to attract sales and discourage repeat purchase.

It is important that designers recognize the power of a comprehensive, deliberate approach to package design. This chapter presents a six-step approach that can be used to design packaging and the packaging matrix, a tool for prioritizing the myriad of considerations and perspectives that must be considered.

BIBLIOGRAPHY

1. R. Koh, E. Schuster, and N. Lam, "Prediction, Detection, and Proof: An Integrated Auto-ID Solution to Retail Theft," MIT Auto ID Center white paper, 2003.
2. H. E. Lockhart, "A Paradigm for Packaging," *Packaging Technol. Sci.* **10**, 237–252 (1997).
3. T. P. Labuza and W. M. Breene, "Applications of Active Packaging for Improvement of Shelf-Life and Nutritional Quality of Fresh and Extended Shelf-Life Foods," *J. Food Processing Preserv.* **13**(1), 1–69 (1989).
4. L. Roth, "The Making of a Designer: Ideas and Techniques" in *Packaging Design*, Van Nostrand Reinhold, New York, 1990, pp. 33–35.
5. K. T. Ulrich and S. D. Eppinger, Development Processes and Organizations," in *Product Design and Development*, Tata McGraw-Hill Companies, New Delhi, 2004, pp. 187–208.
6. B. Stewart, The Packaging Designer's Toolbox" in *Packaging Design*, Laurence King Publishing, London, 2007, pp. 59–92.

Further Reading

J. C. Jones, *Design Methods: Seeds of Human Futures*, John Wiley & Sons, New York, 1981.

C. Lloyd-Morgan, *Packaging Design*, RotoVision S.A., Crans-près-Céligny, Switzerland, 1997.

S. Cliff, *50 Trade Secrets of Great Design Packaging*, Rockport Publishers, Gloucester, Massachusetts, 1999.

K. T. Ulrich and S. D. Eppinger, *Product Design and Development*, Tata McGraw-Hill Companies, New Delhi, India, 2004.

G. Calver, *What Is Packaging Design?,* RotoVision S.A., Mies, Switzerland, 2004.

B. Stewart, *Packaging Design Strategy*, Pira International, Leatherhead, Surrey, UK, 2004.

B. Stewart, *Packaging Design*, Laurence King Publishing, London, UK, 2007.

PACKAGING DESIGN SYSTEM FOR FRESH PRODUCE

P. V. Mahajan
F. A. Rodrigues
M. J. Sousa-Gallagher
Department of Process and
Chemical Engineering,
University College Cork,
Ireland

MAP DESIGN

MAP design requires the determination of intrinsic properties of the produce—that is, respiration rate, optimum O_2 and CO_2 gas concentrations, and film permeability characteristics as shown in Figure 1. The ultimate aim of this design process is to select suitable films for a given product, its area and thickness, filling weight, equilibrium time, and the equilibrium gas composition at constant and varying temperature conditions (1, 2). It is noted that the temperature is never constant in the distribution chain of fresh produce. Due to the temperature dependence of the respiration rate and the gas permeability of a packaging film, a film that produces a favorable atmosphere at the optimal storage temperature may cause excessive accumulation of CO_2 and/or depletion of O_2 at higher temperatures, a situation that could lead to metabolic disorders with concomitant safety and quality issues.

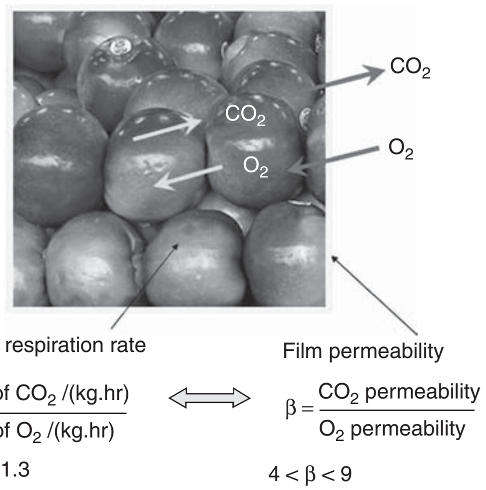

Figure 1. Basic principles of modified atmosphere packaging (MAP).

The "pack-and-pray" approach and in-house trial-and-error experiments are normally used to find a suitable packaging material, film area for gas/water vapor exchange, package size, and the quantity of product to be packaged. This is both time and labour intensive and a potential risk to health. It is noted that the existing commercial vegetable packages deviated from the optimum MAP conditions as measured by our research group (Figure 2) (3). A MAP system, if not designed correctly, may be ineffective or even shorten the storage life of a product. There is a wealth of published information on MAP, yet no systematic study has been conducted to establish which commercially available polymeric films would be most suitable for a particular produce under a given set of environmental conditions. Such analysis could provide an initial screening of films, point out their potential limitations, and allow a better package engineering design. Mathematical modelling and computer simulation is a valuable tool in this context.

AN ENGINEERING APPROACH TO THE PACKAGE DESIGN

Sound use of MAP entails consolidated knowledge of the food–package–environment interaction: When a product is packed, it is surrounded by a gaseous mixture, the composition of which depends on the interactions between the food product, the package material, and the environment. If the packed food is a fresh-cut product, such interactions concern the respiration metabolism of the product (Figure 1): The product exchanges gas with the

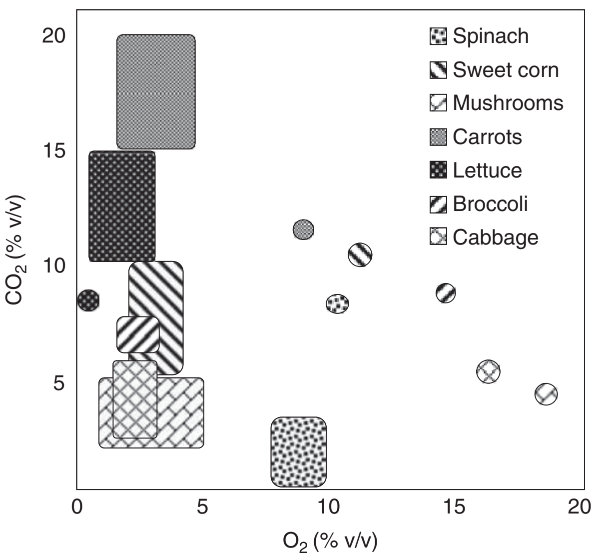

Figure 2. Recommended atmospheres for vegetables and average atmospheres of commercial packages. (Boxes show the recommended gas composition, and circles show the average gas composition of commercial packages.)

surrounding atmosphere, consuming O_2 and CO_2 carbon dioxide (4). The ratio between the CO_2 production rate (mL/(kg · h)) and O_2 consumption rate (mL/(kg · h)) is the respiration quotient (RQ). Due to the respiration process, an O_2 and CO_2 concentration gradient between the headspace and the environment is generated. Thus, a gas flow is activated through the packaging material due to film permeability to O_2 and CO_2. The ratio between the permeability to CO_2 and the permeability to O_2 is known as selectivity (β). From the above considerations, to design a package for a fresh-cut product, one clearly needs to deal with packaging system in dynamic conditions. Therefore, to ensure a suitable gas composition during the product's shelf life, a model should take into account the factors and steps shown in Figure 3. The first and most important factor is the respiration rate. The mathematical model for respiration rate is usually a function of O_2, CO_2, and temperature (5). The second important factor is the type of packaging material and its permeability in terms of O_2 and CO_2. Permeability changes with temperature; hence, a mathematical model is required to predict the permeability change in the packaging material, which is a function of temperature. Another factor is the best optimal atmosphere required to extend product shelf life which varies from product to product and is widely covered in the literature. A real challenge is how to achieve this atmosphere for a given type of product and packaging conditions. The answer is to go for either (a) a layman's approach of trial-and-error experiments or (b) an engineering approach where mathematical equations depicting product respiration rate and package permeability could be used to solve the mass balance equations of a packaging system using software tools.

INTEGRATION OF MATHEMATICAL MODELS FOR MAP DESIGN

For any packaging design, the product characteristics such as respiration rate, density, and the optimum range of O_2 and CO_2 for the best shelf life are needed for solving the mass balance equations. Such data are widely available in the literature and has been compiled in a ready-to-use format (2, 6). This database helps to choose the appropriate film for the given product. Another database has been created for packaging materials; this includes their permeability values, mathematical models to predict permeability at any temperature, film thickness, availability, and cost. When several films can be used to provide a protective atmosphere, their cost is a major selection factor. A packaging design protocol has been developed for selection of the best film for a given product. This requires knowledge of the optimum gas composition (O_2 and CO_2) and determination of the respiration rate of the selected product using the database on respiration rate mathematical models.

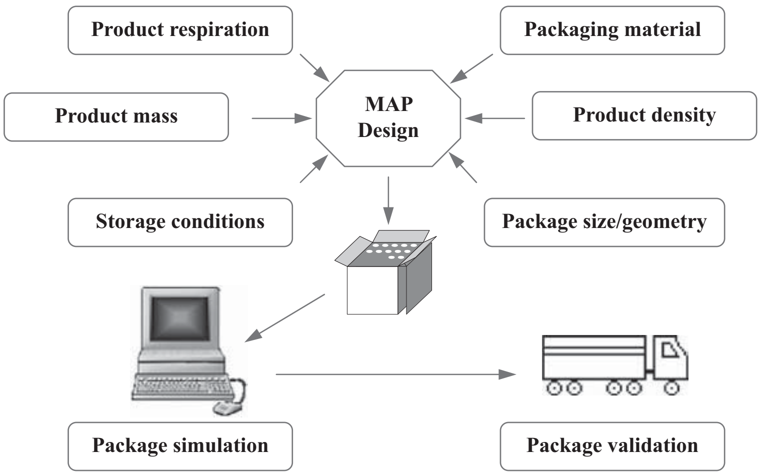

Figure 3. Factors affecting MAP design.

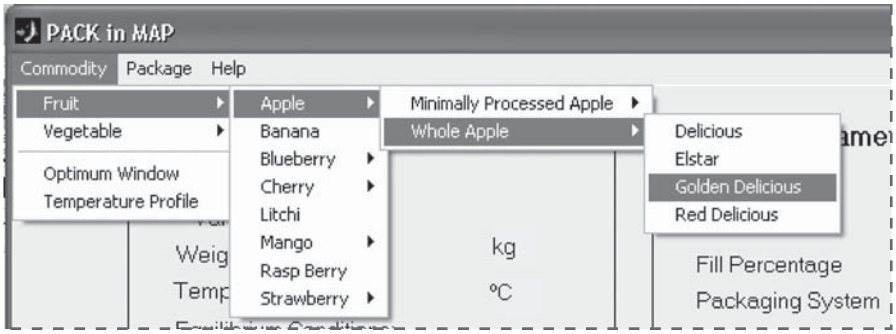

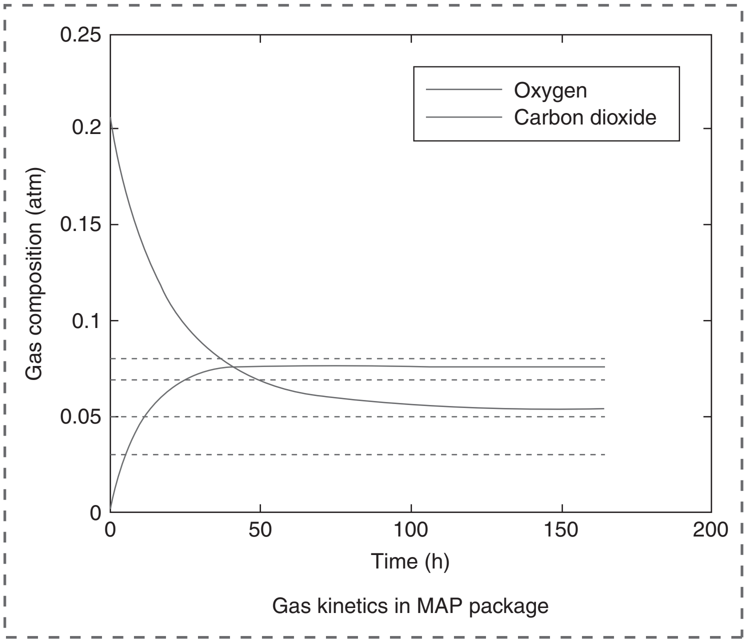

Figure 4. A graphical user interface of PACK-in-MAP software and kinetics of gas exchange in MAP.

PACK-IN-MAP SOFTWARE

The published information on MAP has been compiled, and software called PACK-in-MAP (7) has been developed to establish which commercially available polymeric films would be most suitable for a particular produce (1, 2). The user-friendly software, PACK-in-MAP, has been developed using the Matlab 6.0 program. It incorporates the database for respiration rate, optimum temperature, and optimum range of O_2 and CO_2 concentrations for different fruits and vegetables and permeability of different packaging materials, including micro-perforated films. This database is helpful in designing MAP for 38 fresh and fresh-cut products using 27 polymeric films and micro-perforated packages. Some of the database is made flexible so that users can configure it to their requirements.

In the Pack-in-MAP software, the user defines the type of product, storage conditions, amount of product to be packed, and size and geometry of the package. The software selects the optimum gas composition (O_2 and CO_2) and calculates the respiration rate for that product. The software then selects the best possible films in the given range of permeability ratio and calculates the area of each film required to achieve the desired gas exchange. Alternatively, the user may specify the area available for gas exchange, and the software calculates the amount of product that can be suitably packed. It avoids time-consuming trial-and-error experiments to determine the best packaging system for the given product (1, 2). Finally, the software simulates how the package atmosphere (O_2 and CO_2) changes over storage time (Figure 4) for the given time–temperature profile for the particular product. The simulated results have been successfully validated for mushrooms and cheese by conducting packaging experiments under known environmental conditions for each product.

FEATURES AND BENEFITS OF PACK-IN-MAP SOFTWARE

Features

- Stand-alone user-friendly software for packaging design

- Option for user-defined conditions for respiration and permeability
- Selects the optimal storage conditions for a given product (O_2 and CO_2)
- Calculates the specified product respiration rate at given storage conditions
- Selects the package geometry and calculates product volume
- Selects the suitable packaging film(s) for a given product
- Defines the amount of product to be packed
- Calculates the area of the film that should be available for gas exchange
- Simulates the package atmopshere with time in a graphical form
- Enlists other polymeric film(s) suitable for the given product
- Suggests different packaging options:
  - Polymeric films with micro-perforations,
  - Polymeric films with macro-perforation,
  - Perforation-mediated packaging systems
- Defines the optimum size and number of perforations for a given product

Benefits

- Reduces the cost by minimising the number of trials per optimal packaging design
- Suggests the best possible packaging film to achieve an optimal atmosphere for a given product
- Simulates the package atmosphere without knowledge of mathematical models, package design, and modified atmosphere packaging itself
- Capability of simulating the package at varying temperature set according to the real-life distribution chain
- Evaluates the impact of product and package variability on internal package atmosphere

BIBLIOGRAPHY

1. P. V. Mahajan, F. A. R. Oliveira, S. C. Fonseca, M. J. Sousa, and L. M. Cunha, in Y. H. Hui, ed., *Handbook of Food Science, Technology and Engineering*, Taylor & Francis CRC Press, 2006, pp. 1–16.
2. P. V. Mahajan, F. A. R. Oliveira, J. C. Montanez, and J. Frias, *Innovative Food Sci. Emerging Technol.* **8**(1), 84–92 (2007).
3. P. V. Mahajan, F. A. R. Oliveira, J. C. Montanez, and T. Iqbal, *New Food* 1, 35–36 (2008).
4. D. S. Lee, Y. Song, and K. L. Yam, *J. Food Eng.* **27**, 297–310 (1996).
5. T. Iqbal, F. A. R. Oliveira, P. V. Mahajan, J. P. Kerry, L. Gil, M. C. Manso, and L. M. Cunha, *Acta Horticulturae (ISHS)* **674**, 105–111 (2005).
6. S. C. Fonseca, F. A. R. Oliveira, and J. K. Brecht, *J. Food Eng.* **52**(2), 99–119 (2002).
7. Pack-in-MAP Packaging design web information. Available at http://www.packinmap.com, accessed October 31, 2008.

PACKAGING FUNCTIONS AND ENVIRONMENTS

KIT L. YAM
Department of Food Science,
Rutgers University, New
Brunswick, New Jersey

When designing a package, it is useful consider that the functions of the package and environments the package will likely encounter during its manufacture, distribution, and end use. The concept discussed below is applicable to almost any products; however, food is used as an example since the concept is very useful to this product.

PACKAGING FUNCTIONS

A food package must serve one or more functions to justify its existence. Traditionally, food packaging has four basic functions: protection, convenience, communication, and containment. A package design may be evaluated based on how well the package performs the required functions in a cost-effective manner.

- *Protection*. Protecting the food from physical damage, physiochemical deterioration, microbial spoilage, and product tampering is probably the most important function of packaging. Without proper protection, the food may become unappetizing, less nutritious, and unsafe to consume.

  The required packaging protection depends on the stability and fragility of the food, the desired shelf life of the food package, and the distribution environment. Good package integrity is also required to protect against loss of hermetic condition and microbial penetration.

  Generally, the protection function of packaging is limited to foods whose shelf lives are controlled by environmental factors relating to physical damages, humidity, oxygen, light, and, to some extent, temperature. Packaging is usually not effective for protecting foods whose shelf lives are controlled by internal factors. For example, consider a tuna sandwich in which moisture may migrate internally, from the tuna to the bread, causing the bread to become soggy and unacceptable to the consumer. The internal moisture migration is driven by the difference in water activities between the tuna and the bread, not by the relative humidity outside the sandwich. Thus enclosing the sandwich with a package will not solve the problem; perhaps placing an edible coating between the tuna and the bread may provide an acceptable solution.
- *Convenience*. This is an important function to satisfy the busy consumer lifestyle. Examples of convenient food packages are ready-to-eat meals, heat-and-eat meals, and self-heating packages. Examples of convenient features are easy opening, resealability, and microwavability. Innovations are constantly sought

to provide more convenience without sacrificing quality or increasing cost.

- *Communication.* The function of communicating is important to create brand identity and influence consumer buying decisions. The package communicates with the consumer through written texts, brand logo, and graphics. In many countries, nutritional facts such as calories, fat, cholesterol, and carbohydrate are required on all food packages.

  The communication function is also important for facilitating distribution and retail checkouts. The bar code has virtually become an integral part of every commercial food package. Besides the bar code, there are other package devices, such as time-temperature indicator and radio-frequency identification (RFID), which enable the package to communicate more effectively for the purpose of ensuring food quality and safety. For example, intelligent packaging (1) is a new technology that pushes the communication function to a higher level.
- *Containment.* Containing the food product is the most basic function of packaging. The requirement for containment depends on the size, weight, form, and shape of the enclosed food; for example, a solid food has different requirements from a liquid food. The containment function is also closely related to the rigidity of the package.

PACKAGING ENVIRONMENTS

The package typically functions under three environments:

- *Physical Environment.* This environment is concerned with the physical conditions that a package may encounter during its life cycle. For example, the package may have to withstand the harsh temperature/pressure conditions during retorting, as well as shock and vibration, falls and bumps, crushing from stacking, and attack from insects and rodents during storage and distribution. To protect against this environment, the package must have adequate mechanical strength and thermal stability, as well as other properties depending on the situation.
- *Ambient Environment.* This environment is concerned with the oxygen, moisture, odors, molds, bacteria, light, and heat which are ubiquitous during storage and distribution. To protect against the negative impact of the ambient environment, the package must have an adequate level of barrier properties depending on the requirements of the food.
- *Human Environment.* This complex environment is concerned with the human aspects of packaging, such as the user-friendliness, liking/disliking, and safety of a package to the consumer. Many socioeconomic issues such as the impact of packaging on the environment, packaging related legislations and regulations, and packaging related litigations are largely influenced by humans. Human perception, vision, dexterity, and language are also included in this environment.

Understanding these three environments and the nature of the food product is important for specifying the packaging requirements.

Based on the above discussion, Table 1 may be constructed to provide an overview of the relationship between packaging functions and packaging environments. This table is particularly useful during the early stage of the package development process for facilitating brainstorming and identifying key areas for further consideration.

FUNCTIONS/ENVIRONMENTS TABLE

In Table 1, packaging functions and environments are arranged in columns and rows. This table is useful for identifying certain packaging features, operations, devices, or considerations that are important for the package to function under certain environments.

For many food packaging systems, it is possible to associate items to most of the cells in Table 1. Although the selection and interpretation of the cell items involve somewhat subjective choices, the functions/environments table helps the product development team to consider all aspects of the food packaging system in a systematic manner. Shown below are examples of items that may be associated with the cells. With some imagination, other helpful items may also be associated.

- *Containment / Physical.* The size and type of package determine how much and what kind of food can be contained and how much physical abuses the package can withstand.
- *Containment / Ambient.* The size and type of package determine how much and what kind of food can be contained and the ability of the package to protect

Table 1. Functions/Environments Table

		Packaging Functions			
		Containment	Protection	Convenience	Communication
ENVIRONMENTS	Physical				
	Ambient				
	Human				

against oxygen, moisture, or light from the ambient environment.

- *Containment/Human*. The size and type of package determine how much and what kind of food can be contained and ease of use of the package to humans.
- *Protection/Physical*. Mechanical strength and seal strength are important for protecting the product from physical abuses.
- *Protection/Ambient*. Barrier properties and seal integrity are important for protecting the food product from the adverse effects of oxygen, moisture, microbes, and light in the ambient environment.
- *Protection/Human*. Tamper-evident packaging is useful to protect the consumer from product tampering. Regulations are necessary to protect from unsafe packages harmful to the consumer.
- *Convenience/Physical*. Efficiently bundled packages offer convenience to the manufacturer during storage and distribution.
- *Convenience/Ambient*. Aseptic packages offer the convenience of storing food products at ambient environment instead of refrigerated conditions.
- *Convenience/Human*. Microwavable packages and easy-to-open packages offer convenience to the consumer.
- *Communication/Physical*. Bar codes can facilitate communication of information through the physical distribution of the product in the supply chain.
- *Communication/Ambient*. Time-temperature indicators and biosensors may be attached to the package to communicate the conditions of the ambient environment.
- *Communication/Human*. Nutrition labels, instructions, and graphics on the package can provide useful information to the consumer.

To take a step further, relative values (from 0 to 100) may be assigned to the cells in Figure 1 (2). A three-dimensional chart may then be generated using the functions, environments, and relative values as x, y, z coordinates. The determination of these relative values is a process that frequently requires subjective judgment. A hypothetical example of this chart is shown in Figure 1. The chart provides a bird's-eye view of the functions–environments relationships and is useful for prioritizing the cells and identifying areas of strength and weakness of the food packaging system.

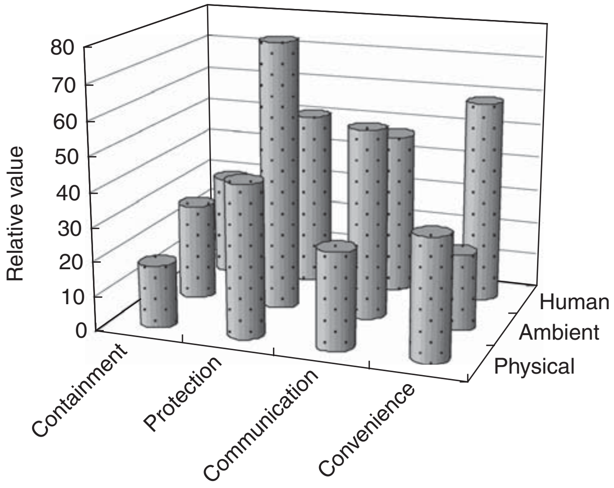

Figure 1. Three-dimensional plot of functions versus environments.

BIBLIOGRAPHY

1. K. L. Yam, P. T. Takhistov, and J. Miltz, "Intelligent Packaging: Concepts and Applications," *J. Food Sci*. **70**, R1–10, (2005).
2. HE Lockhart, "A Paradigm for Packaging," *Packag. Technol. Sci*. **10**, 237–252 (1997).

PACKAGING IN CHINA

Zhi-Wei Wang
Packaging Engineering
Institute, Jinan University,
Zhuhai, People's Republic of
China

PACKAGING INDUSTRY OF CHINA

The Chinese packaging industry is playing a more and more important role in the world. It has now maintained a good momentum of growth for the past 30 years due to the progress of reform and opening up of trade, the establishment of the socialist market economy system, and China joining the World Trade Organization (WTO). From 1980 to the present, the total output value of the Chinese packaging industry including packaging materials (paper, plastic, glass, metal, bamboo and wood, and others), packaging printing, and packaging machinery has increased from RMB 7.2 billion (US$ 0.89 billion) to RMB 500 billion (US$ 61.96 billion) at an average annual growth rate of over 18%. It ranks 14th among 42 main industries in China. In terms of packaging production, China has become the third largest packaging country after the United States and Japan.

The output of paper, plastic, metal, glass, and other packaging materials has increased largely. Paper and plastic packaging materials, which represent over 60% of the Chinese packaging industry's output, have become the two pillars. The output of some packaging products in China has taken the lead in the world, such as paper bags, plastic weave bags, plastic bags, compound soft package, and metal barrels. The packaging industry undertakes annual packaging for hundreds of billion US dollars domestic and overseas commodities, which has met the need of national economic development.

Take year 2005, for example (1). The total output value of the Chinese packaging industry has reached RMB 401.687 billion (US$ 49.774 billion), which is about 2.2%

of the gross domestic product (GDP) for the year. The total output value and growth rate of each kind of packaging are shown in Figures 1 and 2. The proportion of the output value of each packaging in the total output value of China's packaging industry is shown in Figure 3. In terms of packaging innovation, the new product output value is RMB16.261 billion (US$ 2.015 billion), which is about 4.05% of the total output value for the packaging industry. Although the innovation capability of the Chinese packaging industry is low, its development speed has exceeded the growth rate of total industrial output value. In each kind of packaging, the largest proportion of new product output value in total industrial output value is occupied by packaging machinery, which is about 11.4%. The contribution of new product output value of each kind of packaging to total new product output value of packaging industry is shown in Figure 4.

The economic structure of packaging enterprises changes with the sound development of the Chinese packaging industry. The number of public enterprises is decreasing, while that of stock enterprises and others types is increasing relatively fast, especially foreign-funded enterprises. On the other hand, there is a tendency of group development in the Chinese packaging industry.

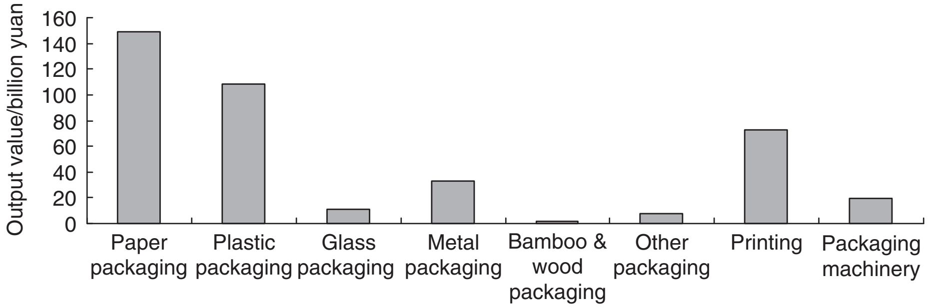

Figure 1. The total output value of each kind of packaging. [Data source: Information and Statistics Collections on China's Packaging Industry 2006 (1).]

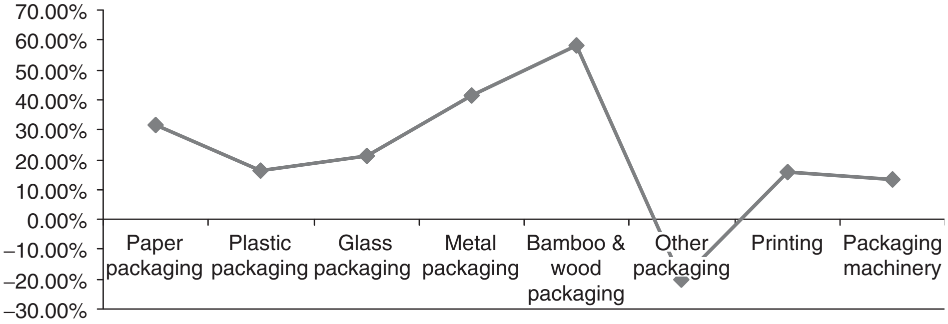

Figure 2. The growth rate of each kind of packaging. [Data source: Information and Statistics Collections on China's Packaging Industry 2006 (1).]

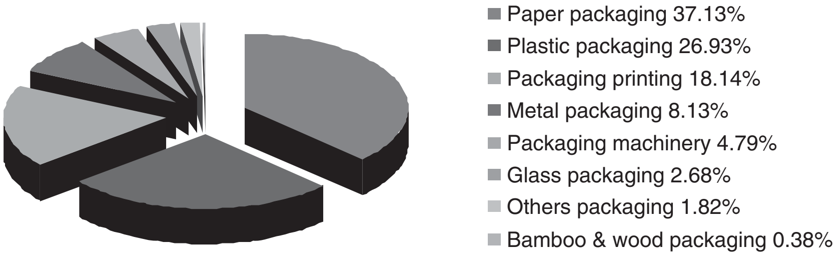

Figure 3. The proportion of the output value of each kind of packaging in the total output value of China's packaging industry. [Data source: Information and Statistics Collections on China's Packaging Industry 2006 (1).]

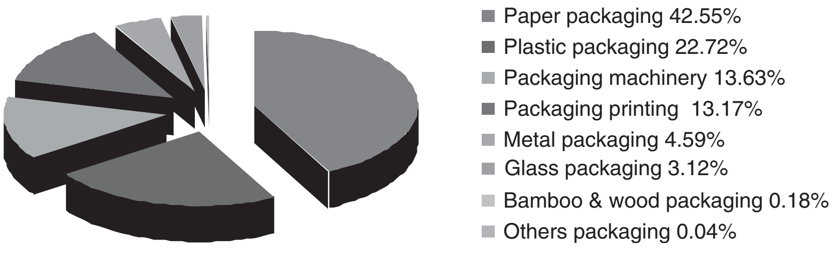

Figure 4. The contribution of new product output value of each kind of packaging to total new product output value of the packing industry. [Data source: Information and Statistics Collections on China's Packaging Industry 2006 (1).]

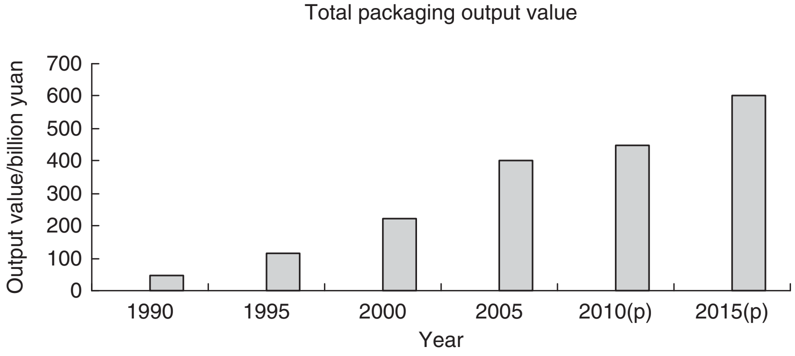

Figure 5. Total output value of China packaging from 1990 to 2015. [Data source: China Packaging Annual 2006 (2). Note: "p" means "plan".]

Many large packaging groups have emerged in some provinces and metropolitan regions of China, such as Guangdong, Zhejiang, Jiangsu, and Shanghai.

The development of the Chinese packaging industry is unbalanced due to the inconsistent development of the local economy. The packaging industry in Eastern China develops markedly faster than in Central and Western China. In terms of economic structure, state-owned packaging enterprises in Middle and West China surpass foreign-funded enterprises and other types, while in Eastern China the opposite situation is found. The further economic development in China brings the need for accelerating the development of the packaging industry in Central and Western China.

The Chinese packaging industry has formed an elementary modern industry system with the main constitutes of packaging materials and modern packaging technology and equipments. China is developing from a large packaging country to a powerful packaging country in the world. By the year 2010, it is projected that the Chinese packaging industry will be built into a modern packaging industry with higher comprehensive innovation ability, reasonable industry infrastructure, optimized industry distribution, remarkable technical progress, wholesome service system, perfect industry standard system, prominent brand, and resources with multipurpose use. The total output value of the Chinese packaging industry should reach about RMB600 billion (US$ 74.3 billion) in the year 2015. With the remarkable development of packaging technology, it is estimated that the output of paper packaging materials will reach 36 million tonnes, plastic packaging materials 9.46 million tonnes, metal packaging materials 4.91 million tonnes, glass packaging materials 15.5 million tonnes, and packaging machinery 1.2 million sets, as shown in Figures 5–11 (2). At same time, the high-quality packaging will strongly support the further development of export trade of China, particularly in those of higher-value products.

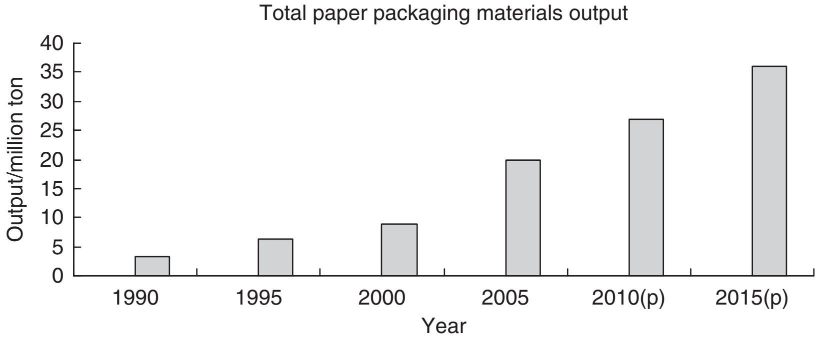

Figure 6. Output of paper packaging materials of China from 1990 to 2015. [Data source: China Packaging Annual 2006 (2).]

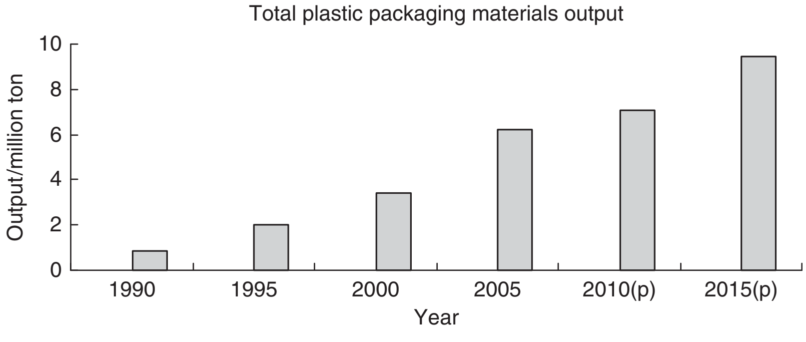

Figure 7. Output of plastic packaging materials of China from 1990 to 2015. [Data source: China Packaging Annual 2006 (2).]

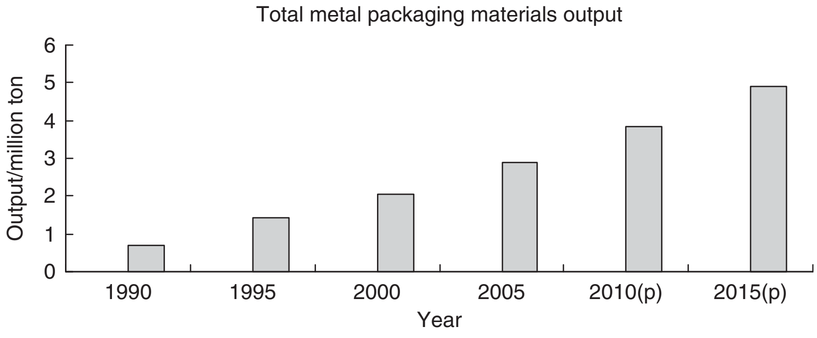

Figure 8. Output of metal packaging materials in China from 1990 to 2015. [Data source: China Packaging Annual 2006 (2).]

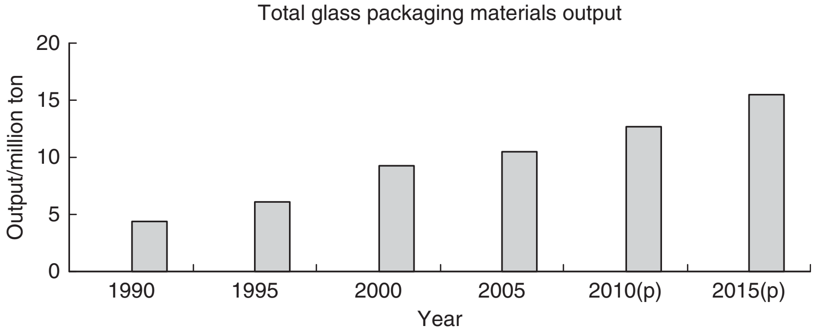

Figure 9. Output of glass packaging materials of China from 1990 to 2015. [Data source: China Packaging Annual 2006 (2).]

CHINESE PACKAGING STANDARDS

Since Packaging Standards are beneficial to national interest and world economic prosperity, it is very important to establish standards that meet international criteria and fit the national situation within China as well. Up to now, China has set up more than 500 national packaging standards, which can be divided into three levels: (1) fundamental packaging standards, such as packaging glossary, packaging label, packaging series dimension, fundamental test method of transport package, packaging technology, and packaging management standards; (2) specialized packaging standards, such as packaging material, packaging container, and packaging machine standards; and (3) product packaging standards, which specify the requirements for packaging of every product. On the whole, China has built a system of packaging standards which meets the needs of packaging industry. The existing problems are: (1) Some standards are unreasonable and imperfect; (2) the different packaging standards are unsystematic and not well-coordinated; and (3) some standards prefer form to content and have poor operability.

In order to solve the problem of time efficiency and low-level packaging standards, China has adopted many ISO standards (IDT, MOD, NEQ). The Standardization Administration of the People's Republic of China has made a vast revision to the packaging standards. In the food contact materials, the standards of materials and containers including paper, plastic, glass, aluminum, steel, pottery, plant fiber, and wood have been put into effect in recent years; these focus on the restrictions on the harmful substances in packaging materials and containers, but no one considers the overall and specific migration limits (OMLs & SMLs) compared with those of the EU and the United States. At present, the revised standard systems include: import and export food packaging, imported timber packaging adopting international quarantine standards, exported timber packaging adopting international standards, toy packaging keeping to the international standards, food packaging acceptance standards, prepackaging food marking standards, classification and quality standards for pharmaceutical packaging materials and container, and so on. These standards systems will regulate and boost the development of commodity packaging forcefully. For the need of resources economizing, the national standard "Requirements of Restricting Excessive Package for Foods and Cosmetics" is in discussion and will go into effect in 2008.

PACKAGING HIGHER EDUCATION IN CHINA (3)

Higher education in packaging within China has developed at a high speed in keeping with the development of the packaging industry. The courses for packaging technology were set up in 1960s, and the undergraduates of "Packaging Machinery" (as a subdiscipline of "Mechanical Engineering") were enrolled in *Jiangnan University* in the 1970s. The National Ministry of Education approved the establishment of "Packaging Engineering" as an academic discipline for undergraduates in the year 1984. Since

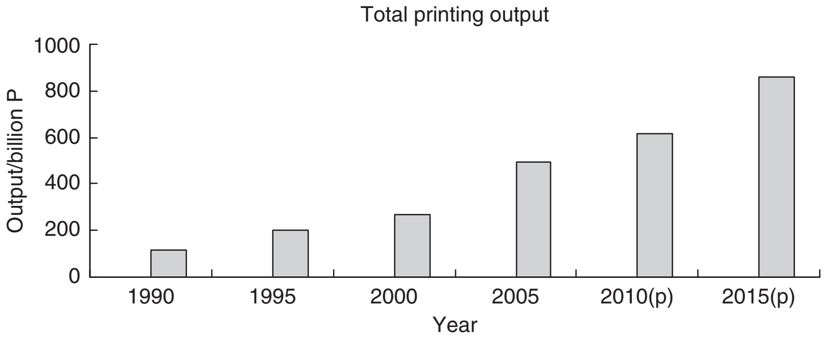

Figure 10. Output of printing of China from 1990 to 2015. [Data source: China Packaging Annual 2006 (2).]

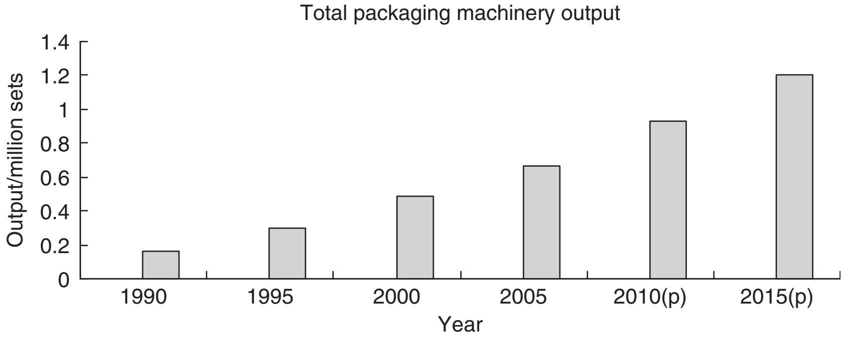

Figure 11. Output of packaging machinery in China from 1990 to 2015. [Data source: China Packaging Annual 2006 (2).]

then, the number of universities with a "Packaging Engineering" program has increased to about 60. Annually about 3000 students graduate in "Packaging Engineering" from the universities, and about 70% graduates are employed within the Chinese packaging industry. Some universities have set up Master's programs in "Packaging Engineering," "Packaging Materials," and "Packaging Mechanics and Engineering"; *Jinan University* and *Jiangnan University* were the first to enroll Ph.D. students in "Packaging Engineering." China has now established an integrated talents cultivation system for the "Packaging Engineering" discipline, which contains graduate education (M.S and Ph.D), undergraduate education and vocational education. The year 2007 has witnessed the successful graduation of the first four Ph.D students in "Packaging Engineering" in China (supervised by professor Zhi-Wei Wang of *Jinan University* and *Jiangnan University*). Compared with the higher education of packaging in some advanced countries, such as the United States, it could be argued that China has the following weak points: (1) The curriculum is not systematic; the coverage of the specialized subjects is narrow, and the core courses are not clear; (2) "Packaging Engineering" is an applied discipline, but the domestic universities usually pay more attention to theory than to practice; and (3) the domestic universities stress engineering but neglect the important disciplines of graphic art, economy, and management.

To solve these problems in packaging education in China, a reform has been conducted in the higher education of packaging undertaken by professor Zhi-Wei Wang (Program of 21st Century National Higher Education Reform (1282B12111): "Train and Practice of Modern Packaging Talents" supported by the Ministry of Education of China and World Bank Organization). Through reform, China has established a new platform for the "Packaging Engineering" discipline and has made new teaching plans and goals. The new teaching plan includes six core courses: "Packaging Materials," "Packaging Technology and Process," "Packaging Machinery," "Packaging Structure Design," "Packaging Decoration and Modelling Design," and "Transport Packaging." These courses have been acknowledged by domestic packaging universities. Until now, the Packaging Education Committee of the People's Republic of China has published two series of widely accepted textbooks and is publishing the third series. Meanwhile, the packaging universities in China are conducting an active academic exchange and cooperation with international packaging universities and institutes. The development of higher education in packaging in China supports and accelerates the development of the national packaging industry.

BIBLIOGRAPHY

1. China Packaging Federation, *Information and Statistics Collections on China's Packaging Industry 2006*, Beijing, 2006 (in Chinese).
2. China Packaging Federation, *China Packaging Annual 2006*, Beijing, 2007 (in Chinese).
3. Z.-W. Wang, "Development of Packaging Higher Education in China," in *Proceedings of 14th IAPRI World Conference on Packaging*. IAPRI, Stockholm, 2004.

PACKAGING IN INDIA

P. V. Narayanan
Indian Institute of Packaging,
India

INTRODUCTION

The growth, expansion, and diversification witnessed in the packaging and the consumer sectors over the last five decades have compelled the industry in India to review and revamp its strategies. It is no longer a domestic issue. The opportunities supported by the technology capabilities and infrastructural facilities have caused the outlook for the packaging industry in India to be global and customer-oriented. The reach is aimed at new markets, state-of-the-art packaging, accessibility, and optimization of manufacturing with focus on logistics. The managerial acumen achieved has provided the leadership quality to enable economical production by adopting best practices, provided under one roof and brand, with the aim of becoming a category champion. Specialization is the key for development that drives innovation and closer customer relationship, with the goal of becoming a total and optimum packaging solution provider. The industry has indeed a daunting task to meet demands from an estimated 300 million consumers to at least 600 million consumers by 2010. The fact that 2010 is not that far away intensifies the demands.

The packaging industry with a consolidated average growth annually at 12% on a normal path should aim to produce over 20 million tons of packaging by 2010. This estimate could be higher if the growth estimate of the retail sector is any indication. This is not an exaggeration if one considers the many shopping malls being constructed in many locations. In simple mathematical terms, the industry sources of supply of converted packages are set to double, if not more. Interestingly, it is not the number, but instead new concepts and newer materials, that suits the changing taste of the dynamic market display and the product-package buyer. Industrialization can only grow with little chance of decline in demand. Industry will have to improve and specialize in niche areas. With the per capita consumption valued at only USD 10 as against the global average of USD 75, the rise in demand is a clear indication of what the packaging industry is heading toward.

The economic environment showing (a) a sustained growth, (b) demographics and skill base, and (c) a positive trend aided by liberalization and deregulation indicates a conducive development of the business environment. It is not "how you grow" but "how much will you grow." The country also has a positive advantage of a cross section of demographic population with 50% below the age of 20 years and 64% below the age of 34 years. In essence, the market movers and takers are a high percentage majority and will set the trend of packaging. India is also moving to attain the enviable position of the second strongest economy in the world, overtaking the United States. The per capita income is set to quadruple by the year 2020, thereby swelling the pocket of the consumers with higher personal disposable income and higher purchasing capacity. It seems that the moment is right for progress. Four key forces influence the shaping of the Indian economy: rapid sustained growth; demographics and skill base; liberalization and deregulation; and conducive atmosphere for business development. The key goals are exploring nontraditional partnerships earmarking global technology, markets, and the supply chain. Trade in goods and services now account for over 35% of the GDP (gross domestic product). The capital market is the most developed in emerging economies, and the liberal foreign investment policy has enabled rapid growth in foreign direct investment (FDI) and foreign institutional investor (FII). India enjoys the benefit of having the largest English-speaking graduate population with the third largest number of science and engineering graduates and will emerge to have the largest work force by the year 2020. All these have a direct positive impact toward obtaining technologically developed resources worldwide. The national GDP is estimated to reach one trillion USD in 2011 and is expected to be three trillion USD by 2025 and 27 trillion USD by 2050. With productivity set to grow at a minimum of 8% by 2050, India is set become the second largest economy in the world. Productivity in industry and services will engage 60% of the labor services and will grow four times that of agriculture. Also the India GDP per capita between 2007 and 2020 in U.S. terms will quadruple. During the period, crude oil consumption is set to increase threefold and car purchases will multiply fivefold.

India has 10 of the 30 fastest-growing cities in the world and is urbanizing at a rapid rate.

Development of infrastructural facilities—that is, road, rail, housing, townships, and dedicated freight corridors—is considered a priority. The unprecedented demand and actual purchase of high-end consumers goods such as two-wheelers, four-wheelers, cell phones, and color televisions, along with the use of credit cards, are clear indications of the upgraded lifestyle of the common masses and the increased availability of personal disposal income. More and more families are becoming smaller and their economic situation is becoming stronger with double incomes; also a clear shift is seen for consumer-value-added products and convenience features. Hence, there is a growing demand for brand name products packaged in various sizes and styles.

GLOBAL PERCEPTION

The extent to which packaging has reached the common public is indeed a matter of concern, particularly when one talks of the growing consumer awareness on one hand while mentioning the contribution of packaging to health and hygiene on the other hand. The concept seemingly gains ground in the context of the observation that 80% of the world population gets the benefit of only 20% of the global package production and availability. The essence probably lies herein as much the 80% of the population belongs to the developing third world. Most of these countries have a very low per capita with respect to packaged product consumption and hence the emerging markets. All these countries, no doubt India too, have a long way to go to reach the global average in terms of package consumption. What is more significant is that the trend has been set and is unlikely to reverse. The overall population is younger, and the lifestyle is now catalyzed by economic considerations and an independent nature. The new buyers are willing to experiment and spend. They are articulate and seek solutions to satisfy their needs even by paying the price. Quality and reliability are the buzzwords, yet costs would remain an important factor. The package conversion industry will find consumer demands for development of new concepts and systems. The challenge will be to evolve packages that would provide the optimum shelf life rather than long shelf life, considered uneconomical and costlier, while at the same time moving toward mechanization and semi- and fullautomation. The product manufacturers will shift their choice for packaging materials and packages that would suit such operations with minimal waste and the amenability to quicker changeover. The packages would need to be modular to facilitate distribution. The purpose of the package is to increase value, widen the marketplace, achieve desired performance and ensure compatibility, improve shelf life, and make a favorable impression.

RETAIL SECTOR

The retail market in India presently estimated at 350 billion USD is expected to grow at about 12% consolidated annual growth. The modern and sophisticated format stores (supermarkets and department stores) are envisaged to grow over 40% annually and will account for 12% of retail trade by value of 60 billion USD by 2012. The total of retail sales is estimated at USD 500 billion by 2012. This has been primarily facilitated by the increasing willingness of the Indian consumer to accept the modern system of shopping. The growing younger generation is found to be experimental and can think differently on how to spend their higher disposable personal income. Interestingly, this phenomenon is not restricted to the urban areas, but occurs equally in the rural areas as well. The urban consumer is fundamentally different from the conservative budget shopper of earlier decades. This is augmented equally by the increasing exposure to Western lifestyles and habits. The consumer demographics are evolving in smaller towns and rural areas where a shift in shopping patterns and buying habits is motivated by consumers' desire to emulate an urban lifestyle.

This adds to the spread of the markets and penetration of consumer-value-added packages and product range in width and depth of the markets. The product and package producers will have to rethink their package sizes in the context of the retail sectors with more emphasis on family-size and multidose packs. Product mix range and brands will have to be increased since this will be demanded by the growing cross section of interested buyers who will look for wider choices. Physical parameters and graphic design will have a greater role to play in display arrangements and will have to create a favorable impression for the impulse buyer. The physical design, display features, and graphics will have a hidden role to play—that is, to convert an onlooker into a buyer and unconsciously create a brand change. The retail market seems to be dominated by textiles and apparel at 36%, followed by jewelry and watches at 17%, food and grocery at 14%, and footwear at 13%. Other markets will be mainly durables, entertainment, health care, and home care. Besides display and graphics, a significant need in the physical design feature will be "carry home" facilities. With the retail sector being offered for foreign direct investment and all world leaders set to enter the Indian retail trade, the growth will be exponential. There will also be bulk movement of farm products to supermarkets, and packaging for consumer packs of fresh produce, poultry, meats, eggs, and so on, will be needed. The retail and distribution segments will have to address to two principal inventory management tools: bar coding and RFID. These both demand creators of labels and labelers, aided by automated produce handling, tighter tolerances, and quality standards for speed and efficiency of larger volume processing and packaging lines.

SHIFTS/TRENDS

The packaging industry began in India in the 1950s and became noticeable in the 1960s. The industry grew in dimensions in the 1970s with a larger cross section of packaging materials and packages produced domestically. In the early 1970s the machinery manufacturers for the packaging industry seized the opportunity and made a very successful impact. The industry assumed greater significance in the 1980s, probably getting excellent support and recognition due to the industrial and fiscal support extended to the food processing industry. The 1990s are considered the golden and growth years when the industry grew in leaps and bounds due to the liberalization policies adopted in the early 1990s and continued thereafter. From the CAG (consolidated average growth annually) of percent growth in the mid-1980s the industry recorded a CAG of 18% by the mid-1990s and stabilized thereafter at around 12%. The estimated packaging materials/package consumption in the mid-1990s was on the order of 5 million tons and rose to over 10 million tons by 2005 and is expected to be more than double by 2010. This takes into account the normal average growth with 5% of agriculture and 10% of horticultural produce that is to be processed and packed. An upward trend in this and the fast-growing retail market will have tremendous impact and probably will double the demand estimates. This also reflects the need to increase the basic material production and conversion industries. In simple terms, there is potential for a yet another packaging industry. The output value of the industry is over 2% of the GDP of the country. A large number of factors attributed to the growth, and principally they include: the shift from bulk distribution and packaging to more and more consumer packages; adopting newer systems in place of conventional packaging; optimizing the packaging needs instead of long-life packages; use of materials and packages conducive to ease in handling convenience; productivity; and distribution. Mechanization—that is, semi- and fully automated systems exhibiting favorable economic efficiency—is another factor. These shifts and trends are principally influenced by consistently increasing (a) consumer consciousness, (b) demand for convenience, (c) attention to health and hygiene, (d) willingness to pay, (e) brand association, (f) quality and value addition, and (g) exports in consumer-value-added packages, as well as by shrinking families.

The industry has witnessed an overall growth contributed by both the basic material manufacturers and package converters, including the printing and graphic design community. All across the industry, there is a favorable growth, some in single digits but others in healthy, double digits. Higher opportunity sectors and, hence, higher growth rates are seen in flexibles, paper, boards, and labels. The CAGs in these sectors are estimated at over 25%, around 18%, and over 20%. Flexible packages have made enviable in-roads in the markets for all forms of rigid packaging, principally due to cost factors, innovation, and cost to product sale value ratio. Laminated tubes have become the virtual choice for toothpaste and now provide solutions as alternatives in pharmaceutical packaging. The polyester-based bottle is probably the single largest packaging media recording spectacular entry and growth. It is equally true for jars and other containers. Metals and glass suffer because of the entry of blow-molded plastics. Typical uses would be to package lubricants and talcum powders. Folding cartons have attained recognition in major industry sectors and not just in food and pharmaceutical sectors. Availability of quality board, improved conversion technologies, multicolor prints (moving from the traditional four-color to eight-color), and modernization through holography have been added advantages. Efforts by both the metal and glass industry cannot be understated. Shaped cans and package modification as composites are significant efforts. The narrow web technology and even sheet-fed label conversion for pressure-sensitive labels have been earmarked with new and modern label presses. Shrink sleeves have gained considerable popularity and found ideal for contoured surfaces.

The bag-in-box and lined carton systems are other sectors that have found greater acceptance, particularly as refill packs. The growth of stand-up and spouted pouches is spurred by a global trend. The rate at which the flexible bottles have made their entry provides new-generation packs and a concept for different market segments. Material-process and technology developments have kept pace with the growing demand, but considerably more is needed to meet the new trends and differentiating marketing systems particularly in the era of retailing, which is now a fast-moving segment in the country.

The Indian market, country–consumer–product needs, need not follow the global situation because quite a few domestic demands could be peculiar to India and Indian consumers. Single-dose flexible packaging is a case by itself, which is known, opened the floodgate for the demand for flexible packaging in the country. Yet another is the introduction of tea in flexibles. The Tetra for edible oils is a typical example of a package that satisfies the need of the market with the technological back up. For a long time, one wished to reuse the 5-paise paper bag for tea (single-dose one-cup tea bag). Thus the evolution of refillable bags followed, cutting cost across the board. The market is indeed revolutionary. All these led to one major facet of the "cost-centric" nature of the consumer, but at the same time the sense of "willingness to experiment." The success of many of these products has obviously led to a chain reaction with more and more products coming into the realm of packaging, thereby widening the scope for packaging.

INDUSTRY SEGMENTS

Industry segments are estimated at INR 400 billion with a share of nearly 60% for consumer packaging with the following breakdown:

Flexible packaging, 21%
Rigid plastics, 18%
Printed cartons, 17%
Glass, 10%
Metals, 6%
Caps/closure, 5%
Labels, 4%
Others, 19%

The consumer packaging industry annual growth is placed at:

Processed food, over 20%
Pharmaceuticals, over 10%
Health/personal care, 15%
Home care, 8–10%
Engineering and electronics, over 10%
Software, over 20%
Textiles, 7%
Chemicals, 8%
Consumer durables, 8%
Toys, 7%
Incense sticks, 10%

Table 1 gives data on packaging consumption patterns.

Table 1. Packaging Consumption Patterns

Sector	Percent
Food	–40
Personal care/Cosmetics	–15
Pharmaceuticals	–8
Engineering and electronics	–10
Chemicals	–10
Others (toys, textiles/-garments/handicrafts, etc.)	–17
	100

PACKAGING MATERIALS

Flexible packaging has been the dominant area that has made considerable inroads into all rigid packaging. This is the single largest packaging media with the most innovation and most suited to the cost-centric Indian consumers. Laminated and coextruded tubes have virtually replaced the aluminum tubes. Aluminum tubes, however, continue to be the preferred medium for medicinal eye ointments. The PET bottle is yet a major packaging resource with over 20% annual growth. Bottles for drinking water, edible oils, and preserves are specific growth areas. Blow-molded polyolefins also have virtually dominated the edible oil, lube oil and greases, adhesives, pharmaceuticals, and talcum powders sectors.

The flexible packaging industry is valued at Indian Rupees 48,400 crores (USD 12,000 million) and has become the most economical form of packaging not only for consumer quantities, but also for institutional and family packages up to 5 kg. The manufacturing sector, however, is highly fragmented and spread throughout the country. They belong to small, medium, and organized sectors, and the output caters to various segment needs. Among the primary packaging conversion industries, flexible packaging could primarily take the lead with updated technologies, innovations, and development of various permutations and combinations. The latest technologies with complete automation process control are now installed within the industry. The conversion capabilities are built with both (a) proven technologies and machinery from around the world and (b) domestically produced equipment. The total number of converting units should be around 700, a few of which also have been established as excellent supply hubs for export markets.

The entry of coextruded film production was with a 2-layer structure demanded by the milk sector, but slowly and gradually a large number of 3-layer plants of both overseas and domestic origin were established. The country today has seven 5-layer plants and two 7-layer plants. The 2- and 3-layer plants are used as direct packaging media and as substrates in laminate structures. The common end-use applications are milk, edible oils, ghee, vanaspati, and sensitive food products. High-barrier structures also have extensive application in tubes for cosmetics and personal care products.

The printed folding-board cartons are closely on the heels of the flexibles, with an estimated growth of 17–18%. The industry consumes nearly 1 million tons of materials valued at INR 50 billion (USD 1250 million). Pharmaceuticals, food, cosmetics, personal care and toiletries, incense sticks, clothing, and liquor are the major use segments of folding-board cartons. The folding-board cartons also include lined cartons, and the major user sectors include malted foods, milk powder, and baby cereals. In aseptic packaging, good-quality board, now domestically available, is primarily used for fruit juices. New market areas are edible oils, motor oils, and buttermilk.

Among the plastics, HMHDPE has made considerable inroads into the metal container industry for packaging of a variety of liquids, semisolids, and solid products, including those that fall under the dangerous goods codes. These are available in capacities of 5–210 L. A very interesting shift is the 20-liter HDPE containers that now replace the traditional tinplate containers. Clarified polypropylene (PP) is a recent entrant that also has excellent applications. Trials are underway to introduce retail juice and beverage packs. Poly(ethylene terephthalate) (PET) is possibly the single most used plastic that has emerged as a most popular package in sizes of 200-mL to 5-L bottles/jars.

The 1-L/2-L widemouth jars have found their way into household kitchens as storage containers for sugar, salt, cereals, grains, and so on. An interesting application is gas flush container for “Basmati Rice.” PET bottles have recorded an annual growth of nearly 25%; and between 1995 and 2005, the consumption has grown from 11,000 tons to 140,000 tons. Bottled water and carbonated soft drink (CSD) are the major use sectors. Breakthroughs have been made in the pharmaceutical and liquor sectors.

Glass and metal (tinplate, tin-free steel, and aluminum), continued to show growth in single digits and constrained their growth by the competitive packaging media both for ease in availability and economic considerations. The recently formed Tinplate Promotion Council (TPC) working on the lines of appeal in Europe has been striving through various activities to promote and increase the use and consumption of tinplate in the country. At the annual international conference, TPC gives awards for excellence in design, development, innovation, and informative literature.

Composite containers continue to be packaging for traditional areas and earlier efforts to introduce leakproof composites have not been successful. Cellulosic films have virtually disappeared, but are still used for very restricted applications. Cost and yield are the major influencing factors.

The growth and consumption in primary packaging have a direct impact on the consumption and demand for various ancillary packaging materials. Development is immense and includes inks, adhesives, caps/closures/dispensing systems, and labels. Adhesives and inks are two specific areas that have witnessed leading global companies establishing production facilities either alone or with Indian partners. This has helped in bridging the gaps as well as improving export potential. High-tack and high-bond adhesives, as well as security inks, are already in vogue. Environmentally friendly water-based and alcohol-based inks are knocking at the doors. A phenomenal growth is witnessed in the label sector at a minimum CAG of 20%. The turnover during 2007–2008 is estimated to be worth USD 1 billion and will be 1.4 billion USD by 2010 corresponding to 3 million square meters. This trend will double its 3.2% world market size to 6.3% by 2009–2010 in terms of square meters. The major user sectors are apparel and textiles, food and beverage, tobacco and other fast moving consumer goods (FMCGs), automotive components, and electrical and electronics products. Others would be pharmaceuticals, personal care, industrial lubricants and paints, jewelry, watches and gift articles, computer/software, and so on. Although currently wet-glue labels are prominent, pressure-sensitive (self-adhesive) and shrink-sleeve labels are the growth areas with 25%

CAG. Some of the beer and liquor industries are already evaluating the use of pressure-sensitive (PS) labels. Bar-code technology is being used increasingly, so bar-code labels will find considerable demand. The new segment will be RFID labels, transparent and film labels and “no look” labels, and smart and intelligent and functional labels. They are clever labeling solutions.

Until recently the industry had been confined to some of the closure systems like RSNP (roll-seal non-pilfer-proof) (screw cap), ROPP (roll-on pilfer-proof), 4/6-lug cap (twist on, twist off), press lids, and lever lids. Both metals (tinplate and aluminum) and plastics are general materials in use. With demands shifting to convenience features, dispensing needs are growing faster. The caps/closure/dispensing mechanisms have entered the packaging sector and are penetrating the market at a faster rate. Spouted pouches/flexibles bottles are typical end uses.

Similarly, revolutionary changes also are seen in marking and coding systems. Online coding, with rubber stereos and inkjet printing technology, has helped the packaging line systems.

The Paper, Film, and Foil Converters Association (PFFCA) represents the interest of this industry group and undertakes various promotional programs besides sponsoring the national awards competition for excellence in packaging.

MACHINERY

The machinery required is generally and broadly delineated under the following categories:

- Packaging conversion machines, including printing machinery
- Machinery for packaging line operations
- Machinery for packaging systems
- Ancillary machinery (e.g., coding, marking, labeling, etc.)
- Testing and quality control equipment.

The engineering industry in India considered the viability of designing, development and production of machinery and equipment only in the early 1970s. Until then, most of the domestic needs were met through imports. However, with the encouraging growth of the packaging sector the opportunities also widened and catalyzed the interest of the domestic sector. In the three and half decades, achievements are indeed commendable. Most of the current requirements are met through domestic capabilities. Also, the machinery manufacturing sector also has become a global hub to meet international requirements. Essentially, they have progressed from being an import-dependent sector to becoming an export sector. The exports are even sent to developed countries. This manufacturing sector has geared itself to adopt newer and modern technologies such as PC controls, servo controls, and so on.

The majority of manufacturers are domestically oriented, and only a very few have overseas technical know-how or collaboration. It should, however, be observed that the technologies available are mostly to suit small and medium enterpreneus. The machinery manufacturers have established the Institute of Packaging Machinery Manufacturers of India (IPMMI) to support and encourage the industry and also to address industrial and fiscal issues.

ENVIRONMENTAL ASPECTS

With the per capita consumption of packaging pegged at about USD 10 by value and the global average at about USD 75, the figure for the country is indeed low. The statistics, however, need to be perceived differently for a country like India inasmuch as consumption pattern in urban areas will be different from rural areas. This will also, in turn, influence the post-consumer waste generation. All packaging-related associations are aware of this situation and are involved in activities to source reduction and promotion of the three golden “R’s” (reduce, reuse, recycle). Plastics are at the center of attraction and probably the center of controversy, and they demand greater attention. It is in this context that the Indian Centre for Plastics in Environment (ICPE) was set up by the plastics apex bodies at the behest of the Ministry of Forest and Environment. This center aims to disseminate information and help in all waste management issues, as well as promote and support technologies and methods for waste collection, recycling, and reuse values. The publications and project documents published by the ICPE are indeed excellent resources and provide a wealth of information. The efforts of the associations, institutions, and the concerned departments and agencies need to be augmented in the context of consistently increasing demand and consumption of packaging in the country.

EDUCATION AND HUMAN RESOURCES DEVELOPMENT

The growth in the packaging industry also has led to the recognition and need for trained and qualified packaging personnel to meet the requirements of every segment of the industry: conversion, packaging user, and machinery sector. The requirements are identified on the shop floor and in the laboratory, as well as in R&D (research and development), production, technical service, information, and marketing. Background support education for such personnel is science, technology, engineering, printing, graphics, computer, electronics, and related areas. Personnel with such background and a professional course of one or two years in packaging technology and sciences become ready for the industry. Aware of the need, the universities have included the subject of packaging as part of their syllabus. Exclusive institutions such as the SIES School of Packaging/Packaging Technology Centre offer both graduate and postgraduate programs to aspiring professionals. The Bachelor of Engineering in Printing and Packaging program is of four years duration and is a step toward bridging the gap of qualified printing and packaging people to serve the industry needs. As the demand is set to increase, HRD in packaging will be the need of the hour for a joint effort of institutions, universities, and industries.

GROWTH AREAS

With the branded products on the increase coupled with organized retailing gaining ground and steadily increasing consumerism, the product marketers look for newer and dynamic concepts. The trendsetters will be the large farm sectors, growing middle-class families with better personal disposable income, higher propensity to spend, smaller households, and health and hygiene consciousness resulting in depth in product mix and innovations as dynamic features. The opportunity and niche growth areas will be:

Flexible packaging
Stand-up pouches
Zipper pouches
Dispenser and pouring devices
Retortable pouches
Flexible bottles
PET and PET hot fill bottles
Folding board cartons
Lightweight and specialty glasses
Shaped cans
Co-ex bottles
Speciality lacquers
Environmentally friendly inks and adhesives
Irradiation
Tamper-evident systems
Cold storage and cool storage

High-barrier materials
Reclosable pouches
Spouted pouches
Laser cut pouches
Aseptic systems
Bag-in-box
Clarified PP bottles
Oven/microwavable tray/cartons
Two-Piece tinplate can
Easy-open devices
Thermoform disposals
PS and shrink labels
Smart and intelligent packaging
Bar-code /RFID technologies
Cap/map systems
Display and promotional packs

The Indian packaging industry until recently has been identified as a low-profile sector. It has now moved to a high-profile category. Paper and board and plastics are emerging as preferred packaging media. The often-asked question is, “Is the packaging industry ready to meet the onslaught arising out of the demands?” That probably sums up the positive future of the packaging in the country.

BIBLIOGRAPHY

P. V. Narayanan, “India Packaging”. in A. J. Brody and K. S. Marsh, eds., *The Wiley Encyclopedia of Packaging*, 2nd edition, John Wiley & Sons, New York, 1997, pp. 497–498.

General References

Seminar Papers

“Market Driven Innovations in Packaging of Fresh and Processed Mango Products,” organized by Michigan State University and SIES School of Packaging, Mumbai, September 29–30, 2006.

Conferences Organized by the SIES School of Packaging

“Developments in Packaging Conversion Technologies Potential for International Trade,” December 6–10, 2005.

“International Orientation Programme on Packaging Technologies and Machinery for Food Processing Sector,” February 6–15, 2007.

“Global Conference on Packaging— A Technology Update,” November 23–24, 2006.

PACKAGING IN THE EUROPEAN UNION

LUCIANO PIERGIOVANNI
Department of Food Science
and Microbiology, Milan
University, Milan, Italy

INTRODUCTION

Following the last two entries in 2007 (Romania and Bulgaria), the European Union (EU) now embraces 27 democratic and independent European countries, gathering approximately 490 million citizens (as Table 1 shows) on a surface of almost 4 million square kilometers. In 2005 two more countries (Turkey and Croatia) asked to join the EU and it is foreseeable that within a span-time of about 8–10 years they will become Member States, provided that they pledge to share the values on which the EU is founded—that is, respect for human dignity, freedom, democracy, equality, the rule of law, and respect for human rights. (The European flag is in Figure 1.) They will have also to demonstrate a functioning market economy and a civil service capable of applying EU laws. The European Union is a family of independent countries, with many different traditions and languages, but also with shared values and rules. Among these, a number of EU directives, measures, and regulations apply both directly and indirectly to the packaging area. They refer to sustainable production, packaging waste, food contact reliability, supply chain regulations, environment protection, and consumer safety (1).

Packaging is a leading industrial activity in Europe, where about one-third of packaging worldwide is produced, for a value of almost 130 billion euros. Because European packaging industries are highly oriented toward export and are well known and appreciated in many parts of the world, European packaging materials and packaging technologies deal with a population that is much greater than the actual number of European citizens. The percentage of consumption of packaging materials is more or less the same all over the world; that is, more than 30% accounts for plastics, almost 40% for paper and board, 17.5% for metals, and 7% for glass.

The European packaging economy is estimated to grow further in the next few years, and the expected growth for the 2006–2010 period ranges in the main countries from 1.3% to 2.1%. This is in line with the expected increases in

Table 1. EU Members, the Increasing Population, and When They Joined

State Members	Total Population (2005 Values in Millions)	Year
Belgium, France, Germany, Italy, Luxembourg, Netherlands	228.8	**1952**
Denmark, Ireland, United Kingdom	298.2	**1973**
Greece	309.3	**1981**
Portugal, Spain	358.0	**1986**
Austria, Finland, Sweden	380.4	**1995**
Cyprus, Czech Republic, Estonia, Hungary, Latvia, Lithuania, Malta, Poland, Slovakia, Slovenia	454.4	**2004**
Bulgaria, Romania	484.1	**2007**
Turkey (70.4[a]), Croatia (4.5[a])	559.0[b]	2013–15

[a] Population that can add when those Countries will become Member States

[b] Possible EU total population in 2013–2015

Figure 1. The European flag is the symbol of the European Union. The circle of gold stars on a blue field represents solidarity and harmony between the peoples of Europe. The number of stars has nothing to do with the number of Member States.

the Unites States (1.8%) and in Japan (1.5%) but very far from the forecasts for Russia (7.0%), China (8.5%), Turkey (19.0%) and India (13.0%).

RESEARCH AND TECHNOLOGICAL DEVELOPMENT

The EU allocates a very large amount of economical resources to R&D activities in packaging. Scientific research was one of the first and most important functions that the European community shared and harmonized. In 1984, the European Commission (the executive body of the EU) launched the first pluriannual Framework Programme (FP1) for research and technological development. Since then the FPs have played a leading role in multidisciplinary research and cooperative activities in Europe and beyond, and in each FP the themes of packaging, and food packaging in particular, have had much relevance, leading to important results and real and effective consequences in real life. For example, during FP4 (1999–2001) ACTIPACK, a project coordinated by the Dutch TNO, approached the topic of active and intelligent packaging and promoted a radical change in the European food packaging law that now admits the use of active materials and intelligent packages. MIGROSURE, in FP5, was coordinated by the Fraunhofer Institute (Germany) and demonstrated that diffusion in and migration from food contact materials (FCM) are foreseeable physical and mathematically describable processes. The project provided novel and economic tools for the estimation of consumer exposure to chemicals migrating from food contact plastic materials by establishing and testing a physicochemical migration model now recognized by the food packaging law. SUSTAINPACK, managed by the Norwegian Matforsk during FP6, coordinated 13 countries, including former eastern Europe states. The overall objective of the project was to develop and implement a sustainable packaging tool platform based on renewable resources. The year 2007 saw the start of the seventh programme, which is both larger and more comprehensive than earlier Framework Programs. It will run to 2013 with a budget of 53.2 billion euros, the largest funding allocation yet for such programs. Also in this latest project, the themes of safe and innovative packaging are well represented, attracting the attention of several research groups in research centers and universities in Europe, including those of eastern Europe which are invited to cooperate in the project.

European research and development strategies are under the responsibility of one of the several Directorates General into which the European Commission is organized. In carrying out its own activities, the Directorate General for Research works closely with the Joint Research Centre (JRC), the science and technology reference center for the Union (2). The JRC is organized into seven scientific institutes which carry out research activities of direct concern to EU citizens. One of these, the Institute for Health and Consumer Protection, located in Ispra (Italy), is a well-known and advanced laboratory that carries out fundamental research and testing activities in the field of packaging to improve, in particular, the understanding of potential health risk of food contact materials (3). The JRC in Ispra is the common reference EU Laboratory for FCM, and it assists Member States in carrying out official inspections to enforce compliance with the shared rules on FCM.

Table 2. The Main Packaging Exhibitions in EU and in the World

Exhibition	Exhibitors	Visitors	Surface of Exhibition (m^2)
Interpack 2005 Dusseldorf, Germany	2,654	176,964	164,199
Emballage 2006 Paris, France	2,200	108,054	66,927
Ipack-Ima 2006 Milan, Italy	1,558	47,761	63,172
Hispack 2006 Barcelona, Spain	2,194	40,405	53,669
Total 2007 Birmingham, UK	1,061	Not available	42,870
Pack Expo 2006 Chicago, USA	2,302	45,741	116,600
Upakovka 2007 Moscow, Russia	350	23,000	23,000

The European Food Safety Authority (EFSA), the keystone of EU risk assessment regarding food and feed safety, is also committed to this field. In close collaboration with national authorities and through its Scientific Panel on Food Additives, Flavourings, Processing Aids, and Materials in Contact with Food (AFC), the EFSA provides independent scientific advice on existing and emerging risks to the entire packaging community and their stakeholders (4).

EU PACKAGING STAKEHOLDERS

Besides the industrial organization that represents the small and large private enterprises, the various technical magazines, and the electronic newsletters dealing with the packaging business, almost every country in EU has its own national packaging institute. Their main activity is lobbying the fundamental interests of their members: a number of different bodies which include manufacturers of raw materials, retailers, end-users, packaging producers, schools of packaging, experts and technical consultants in the packaging area. In 2002, a Pan-European cooperation was set up with the constitution of the European Packaging Institutes Consortium (EPIC). EPIC is a consortium where European Packaging Institutes work together to identify areas where cooperation might best be initiated or concentrated for the future sustainable development of the entire packaging chain. EPIC was founded by 12 European Packaging Institutes, covering around 2200 associated companies and approximately 22,000 professional individuals in packaging throughout Europe. Educational programs, qualifications for packaging professionals, instruments for the promotion and facilitation of packaging innovation, methods for the optimal implementation, and enforcement of packaging-related legislation are the main areas in which EPIC is involved. Because EPIC works in a project-oriented manner, packaging education and information services were selected as the most urgent topics to deal with (5).

PACKAGING EXHIBITIONS AND CONFERENCES IN EU

Due to the high technological level of the European packaging industry and also to the proximity of the EU to areas of many developing countries like those in the Mediterranean basin and in eastern Europe, packaging exhibitions in the EU members states are very important trade events.

The biggest packaging event in the world by far is INTERPACK in Dusseldorf (Germany), which takes place every 3 years and hosts the highest number of exhibitors and visitors. The five most important EU countries for the packaging business are Germany, Italy, France, Great Britain, and Spain, and in all of them an international packaging exhibition is regularly organized, attracting globally almost 10,000 exhibitors and 400,000 visitors. In Table 2, the most recent data of these packaging events are presented together with the figures of PACK EXPO in Chicago, the second most important packaging event in the world as a comparison. Data concerning the Russian exhibition UPAKOVKA are also reported. This particular event deserves to be mentioned because it was promoted and organized along its 15 editions since 1982 by the Italian IPACK-IMA and is recognized as the leading and most important business connection between Western and Eastern Europe in the packaging area, the route by which technological innovations first moved to Russia and neighboring countries.

Another proof of dynamicity of the packaging context in the EU is witnessed by the high number and the high level of technical-scientific events which are regularly held in Europe, both on general and specific topics. These events are fundamental moments for sharing news regarding technical and scientific progress and achievements and are also valuable forums for spreading the progressively harmonized regulations on important packaging issues. It is almost impossible to enumerate all the Symposia, Congresses, Conferences, and Workshops organized in Europe each year, but some events and institutions certainly deserve to be mentioned and remembered. Pira International, for instance, which is recognized worldwide as one of the most important knowledge providers in different industry sectors, guarantees both the purposes of sharing harmonized regulations and updating scientific information in packaging; this is done mainly by means of its subsidiary Intertech-Pira (6) which offers events, training, online information, and much more. Alongside business-oriented organizations, there are several nonprofit and scientific associations that also deal with broad scientific topics in packaging. The European Federation of Food Science and Technology (EFFoST), for example, is an organization with 80 members affiliated in 21 European countries, deeply committed to stimulating innovations in novel food processing and packaging through its periodical events and activities (7). A further example of a nonprofit organization is ILSI Europe, which belongs to the International Life Sciences Institute (ILSI). This is a network of scientists which regularly provides publications and organizes meetings on packaging subjects, especially through the Packaging Materials Task Force, aimed at advancing the safety and quality of packaged foods (8). ILSI Europe meetings and symposia are often organized in close collaboration with the European Commission (EC) and the European Food Safety Authority (EFSA).

No less important and numerous are the events and the organizations that in Europe approach more specific packaging issues. Two representative examples in this direction may be chosen selecting an industrial-related topic and a prevailing scientific theme of interest. The field of bioplastics and biodegradable plastics, for instance, is covered by European Bioplastics (9), an industrial association supporting the market introduction of bioplastics but also very active in organizing conferences and exhibitions on the topic. The new achievements for shelf-life extending, shelf-life testing, and prediction are the subject of SLIM (Shelf Life International Meeting), a periodical symposium set up in 2003 that every two years brings together scientists from both industrial and public research institutions (10).

THE PACKAGING MEGA-TRENDS IN THE EU

Pinpointing the main trends and the targets of such a big and diversified world like the packaging world is always difficult and somewhat of a gamble. And it is even more so when a heterogeneous context like the EU is considered. Nevertheless, for the leading influence that the most advanced countries have on the entire European market and that often extend to extra-EU countries, it is worth trying to identify the hottest packaging trends. The pursuit of a correct balance between market and environment will very likely be a significant aspect of the future of packaging in Europe. “Sustainability” will still be one of the most pronounced and written words in packaging, even if the contexts might be different. At least three broad topics can be tentatively mentioned:

1. The prevention or reduction of the impact of packaging and packaging waste on the environment, ensuring the functioning of the internal market, will drive the development of new biodegradable and recycling packaging options.
2. The shaping of the role of outsourcing and workflow, as well as the limitation of the logistics and transport costs, will lead to industrial policies that will affect packaging production and usage.
3. The design of smart and safe packaging that can meet the consumer’s expectations and act on purchasing behavior will certainly engage creative designer and packaging scientists in the search for more sustainable, convenient, and attractive packages.

CONCLUSION

In the increasingly interdependent world of an almost completely globalized economy in the 21st century, it is more than ever necessary to have a common vision for every business, particularly for packaging, because of its tight link with human activities. The EU model of co-operation appears to be a good example of promoting unity while preserving diversity, ensuring that policies satisfy the requirements of all of the peoples of Europe. After the tragedy of the Second World War, European citizens slowly learned to work together in a spirit of curiosity, openness, and solidarity, which also seems to be the best strategy for a balanced development and progress of packaging worldwide.

BIBLIOGRAPHY

1. The European Commission. Available at http://ec.europa.eu/ Accessed June 29, 2007.
2. The Joint Research Centre. Available at http://www.jrc.ec.europa.eu/ Accessed June 29, 2007.
3. Community Reference Laboratory for Food Contact Materials. Available at http://crl-fcm.jrc.it/ Accessed June 29, 2007.
4. European Food Safety Authority. Available at http://www.efsa.europa.eu/ Accessed June 29, 2007.
5. The European Packaging Institutes Consortium. Available at http://epic.elma.nl/over_epic.htm Accessed June 29, 2007.
6. Intertech, a subsidiary of Pira International. Available at http://www.intertechpira.com/ Accessed November 30, 2007.
7. The European Federation of Food Science and Technology, EFFOST. Available at http://www.effost.org/ Accessed November 30, 2007.
8. The International Life Science Istitute, ILSI Europe. Available at (http://europe.ilsi.org/ Accessed November 30, 2007.
9. European Bioplastics, an Industrial Association. Available at http://www.european-bioplastics.org/ Accessed November 30, 2007.
10. Shelf Life International Meeting, SLIM. Available at http://www.packlab-jessica.it/slim2008/ Accessed November 30, 2007.

PACKAGING LINE PERFORMANCE

Paul J. Zepf
Zarpac, Inc.—Engineering,
Oakville, Ontario, Canada

Performance in most production environments is a widely used term similar to efficiency, which means different things to many different people. Therefore the word *performance* can be relative and qualitative if it is not rigidly defined. The only understanding that may be common to all is that it is a reflection of productivity (value/time), output, or effectiveness of time. Unless it is rigorously defined and understood, the word *performance* has limited value to decision makers, other than projecting a sense of being or desire. Performance can be described as a measure of profitability based on the ability to produce the needed quantity of quality packages in the time required to fulfill customer needs at the lowest per unit cost over a sustained long period of time (>1 month). To many people, performance is the best return based on up-front costs or capital costs only. To successful companies, performance is also the best value that is based on capital and ongoing operating costs. If one buys a system based on up-front costs or lowest costs to just get into production without working out operational costs over one-year, three-year, and five-year periods (TCO or true cost of operating), then their anticipated profits (based on marketing targets) will rarely materialize. Too many people are hooked on this false sense of performance that will only contribute to the long-term uncompetitiveness of the company. Short-term or no planning leads to long-term disasters. Anyone can demonstrate excellent performance for an hour or even a day, but performance can only truly be judged quarter by quarter and better still year by year. The best performance translates into consistent steady-state production demonstrating control and quality at all times and under all conditions.

Terms such as output, capacity, efficiency, and reliability have always been key words used in production. They describe the pulse of the production line and play an important role in managerial decision-making.

Nevertheless, these terms are frequently confused, misunderstood, ill-defined, and improperly used. Also, proper mathematics and new tools such as "designed experiments" and computer simulations have not been understood and used effectively because of confusion and misunderstandings.

Efficiency, utility, capacity, and output, when maximized through the application of all available tools, are major contributors to the producers' economic viability.

Unfortunately, production is filled with confusing definitions and outmoded concepts concerning productivity and production line performance.

It is important that all levels of management, especially top management, understand these new or tired and true historical ideas in order to make timely and profitable decisions.

Although efficiency and utilization each tell a story about the performance of a production line, only proper OEE (overall equipment effectiveness) and their derivatives can give a true view of production performance.

OEE (OVERALL EQUIPMENT EFFECTIVENESS)

OEE is the best-recognized hard performance measure and methodology for packages or products that have a very dominant critical input or high-cost product component and few, if any, other input items (e.g., paper mills—rolls of newsprint or white paper, converting, blow molding, injection molding). Some companies use the term *process reliability* instead of OEE. It is usually a key metric that supports or directs TPM, lean, six-sigma, and other common performance-enhancing philosophies below.

$$\textbf{Definition of OEE} = \textbf{Availability} \times \textbf{Quality} \times \textbf{Performance}$$

Availability. *Availability* takes into account **downtime loss** and is calculated as

$$\boxed{\textbf{\textit{Availability}} = \textit{Operating time}/\textit{Planned production time}}$$

Performance. *Performance* takes into account **speed loss** and is calculated as

$$\boxed{\textbf{\textit{Performance}} = \textit{Ideal cycle time}/(\textit{Operating time}/\textit{Total pieces})}$$

Ideal cycle time is the minimum cycle time that your process can be expected to achieve in optimal circumstances. It is sometimes called *design cycle time*, *theoretical cycle time*, or *nameplate capacity.*

Since run rate is the reciprocal of cycle time, *performance* can also be calculated as

$$\boxed{\textbf{\textit{Performance}} = (\textit{Total pieces}/\textit{Operating time})/\textit{Ideal run rate}}$$

Performance is capped at 100%, to ensure that if an error is made in specifying the *ideal cycle time* or *ideal run rate*, the effect on OEE will be limited.

Quality. *Quality* takes into account **quality loss** and is calculated as

$$\boxed{\textbf{\textit{Quality}} = \textit{Good pieces} \ / \ \textit{Total pieces}}$$

More rigorous mathematical definitions of OEE for production processes are

$$\textbf{OEE = Availability} \times \textbf{Quality} \times \textbf{Performance}$$

$$\textbf{OEE} = \underset{\substack{\downarrow \\ \textbf{Main source of} \\ \textbf{time loss}}}{\textbf{Availability}} \times \underset{\substack{\downarrow \\ \textbf{Typically not large} \\ \textbf{(should not be)}}}{\textbf{(1}-\textbf{Scrap factor)}} \times \underset{\substack{\downarrow \\ \textbf{Typically low}}}{\textbf{(1}-\textbf{Rate factor)}}$$

$$\textbf{OEE} = \frac{\text{MTBF}}{\text{MTBF} + \text{MTTR}} \times \frac{\text{Net production}}{\text{Net production} + \text{product loss}} \times \frac{\text{Effective run rate}}{\text{Normal rate}}$$

$$\text{OEE} = \frac{\text{Output (Y)}}{\text{Scheduled time} \times \text{Normal rate}}$$

MTBF is the mean time between failure.

MTTR is the mean time to repair (similar to MTOF or mean time of failure, depending on how you define them).

Normal rate is the steady-state speed of the production process as designed, tested, and verified.

TEEP (TOTAL EFFECTIVE EQUIPMENT PRODUCTIVITY)

TEEP is a recognized overall hard performance measure for production processes. It is essentially what you actually produced over a given time period (usually a week) divided by the output the equipment could conceivably produce using all of the defined time period. The rate loss factor is determined from the specifications agreed to by the OEM and the user and is the normal rate of steady-state running divided by the maximum rate that can be sustained and still ensure quality products. TEEP is in a way the top view of how the plant utilizes all time and its assets, but it lacks the detail and understanding of planned and unplanned events.

TEEP is basically an equipment productivity/efficiency index that corresponds to the total productivity and efficiency of equipment in how much the equipment has served to produce the quality products by using the calendar time given in order to produce. This index indicates the operation environment and machine condition (Chand and Shirvani, 2000), and also indicates what the degree of total productivity/efficiency during the given calendar time is. This index can be calculated as in the equations below.

$$\mathrm{TEEP} = \frac{\text{Actual output}}{\text{Theoretical output}} \qquad \text{for the same time period}$$

$$\mathrm{TEEP} = \left(\frac{\text{Loading time}}{\text{Calendar time}}\right) \times \left(\frac{\text{Operating time}}{\text{Loading time}}\right) \times \left(\frac{\text{Net operating time}}{\text{Operating time}}\right) \times \left(\frac{\text{Valued operating time}}{\text{Net operating time}}\right)$$

$$\mathrm{TEEP} = \left(\frac{\text{Valued operating time}}{\text{Calendar time}}\right)$$

$$\mathrm{TEEP} = \frac{\text{Valued operating time}}{\text{Calendar time}}$$

Valued operating time is the equivalent time the production process has been continuously running at its ideal rate or OEM established possible rate for that machine and product.

$$\mathrm{TEEP} = \text{Schedule factor} \times \text{Rate loss factor} \times \mathrm{OEE}$$

$$\mathrm{TEEP} = \left(\frac{\text{Scheduled time}}{\text{Calendar time}}\right) \times \left(\frac{\text{Normal rate}}{\text{Maximum rate}}\right) \times (\mathrm{OEE})$$

The normal rate is that steady-state line speed that the line was designed to run at during the scheduled producing time period for that product.

The valued operating time is the equivalent time required to run the actual output at the capable rate. All suggested equipment performance indices such as productivity, reliability, efficiency, and maintainability in this model do not directly consider the manufacturing costs.

TEEP is the top view above OEE. OEE is the best metric to use at first because it gives better insight and direction for improving the production process directly.

OTHER COMMON PERFORMANCE-ENHANCING BUSINESS PHILOSOPHIES AND METHODOLOGIES

In this section we will briefly explain some common methodologies for optimizing plant operations and production throughput and thereby affecting performance. Regardless of the methodology used, hard data in the form that can be easily analyzed such as benchmarks and efficiency values are still required. The purpose of introducing these methodologies is to see how performance measurements fit as a requirement for all of them.

CBM—Condition-Based Maintenance (or monitoring)

The Applied Research Laboratory at Penn State University (www.arl.12su.edu/areas/soa/conditionmaint.htrnl) describes this term:

> The objective of condition-based maintenance (CBM) is to accurately detect the current state of mechanical systems and accurately predict systems' remaining useful lives. This enables organizations to perform maintenance only when needed to prevent operational deficiencies or failures, essentially eliminating costly periodic maintenance and greatly reducing the likelihood of machinery failures. CBM represents one of the most promising developments in the evolution of maintenance practices. As organizations are increasingly faced with demands to lower maintenance costs, increase product quality, and hasten organizational responsiveness/operational readiness, CBM has emerged as a viable alternative to traditional planned maintenance, run-to-failure operation, and the various maintenance approaches between those two extremes:

For an example see www.pwcglobal.com/parn/case-studies/case-study/html.

CMMS—Computerized Maintenance Management System

It's pretty well impossible to work in the plant engineering and maintenance area without coming across CMMS software programs. Most technical magazines contain entire columns and even devote whole issues to these software systems. In recent years, vendors have been making the software available on secure, remote internet sites as well. It's hard to come up with a set definition for CMMS, but, in general, software programs that capture data on plant purchasing, maintenance and repair scheduling, and equipment monitoring fall into the broad category of CMMS software.

Because of their role in tracking plant assets and work, CMMS packages are also often used in conjunction with specific, acronym-based maintenance initiatives like PdM and RCM. Finally, CMMS is also often used interchangeably with EAM (enterprise asset management) and ERP (enterprise resource planning) to comprise the wider field of plant software that ties in or attempts to tie in all aspects of plant and production operations from ordering to distribution. See http://controleng.com and search under CMMS.

FMECA—Failure Mode Effect and Criticality Analysis

In his article *Uptime: Strategies for Excellence in Maintenance Management* (Productivity Press, 1995), John D. Campbell defines FMECA as "a logical, progressive method used to understand the root causes of failures and their subsequent effect on production, safety, cost, quality, etc."

In general, FMECA is basically up-front negative thinking with a positive outcome—that is, thinking about what can go wrong and how to fix or deal with it before the fact. FMECA is usually a group activity to identify, prioritize, and identify corrective actions and document all the potential ways a product and/or production system can or could fail to perform its intended function. Prioritizing is done by scoring a severity (S), likelihood (L), and detection (D) (correction (C) if used) and multiplying them together to get an RPN (risk priority number) value, in order to sort and establish a hierarchy of risk and/or items needing further investigation. See Volume 8 of *How to Use Advanced Analysis Tools for Optimum Selection and Troubleshooting of Production Machinery.*

FMECA is a proactive key tool used to prevent problems from occurring and is a vital part of the up-front engineering disciplines. There should be a special focus on safety and environmental issues that must be corrected despite a lack of justification. It also aids in identifying key design or process characteristics that require special controls (those above normal process controls) for manufacturing, as well as highlighting areas for improvement in safety, functional control, or performance. FMECA is a cost-effective logical risk assessment tool for product development & evaluation, safety, environment conditions, quality, time reduction, and historical reference.

There is a web site completely devoted to the FMECA cause, at www.fmeca.com; it provides a functional definition of the term, which is usually used interchangeably with the acronym FMEA: FMEAs are intended to result in preventative actions, and they are not "after-the-fact" exercises done to satisfy a customer or obtain TS or QS 9000 status. Time and resources for a comprehensive FMEA must be allotted during design and process development, when design and process changes can most easily and inexpensively be implemented. Only after a product failure or financial crises arising from late changes in production is the cost of not performing an FMEA revealed.

Good Business Practice

Good business practice has always been and will always be the holistic effective endeavor or work guided by a main purpose or a goal (the focus). All work has to be coordinated in a proper hierarchical manner to yield results of quality and quantity to fulfill human needs in a timely manner with optimum value based on efficient efforts expended and needs required. Good business always focuses on arriving at the optimum combination of product design, assembly process, equipment design, and customer needs. (Some people would call this concurrent engineering, or cross-functional development, but in fact it is just common sense.) Good business practice never yields to wants, likes, or desires, which are false needs and contribute a negative value to the company and eventually to society. False needs are very deceptive but over time always display themselves as negative fruits or results that can be costly to the company; but most of the time, false needs are costly in human lives, money and/or a waste or misuse of the physical and mental resources that we never could nor will be able to waste in the future. See the book *The Art of Work* by Thomas J. Zepf for a more complete development of good business practice.

ISO—International Organization for Standardization

It's impossible to ignore the banners draped on the side of industrial facilities that proudly proclaim the company's compliance with one or another ISO standard, with ISO 9000 and ISO 14000 being the two most popular. As ISO says itself, it is a network of the national standards institutes of 157 countries, on the basis of one member per country, with a Central Secretariat in Geneva, Switzerland, that coordinates the system.

ISO is a nongovernmental organization: Its members are not, as is the case in the United Nations system, delegations of national governments. Nevertheless, ISO occupies a special position between the public and private sectors. This is because, on the one hand, many of its member institutes are part of the governmental structure of their countries, or are mandated by their government. On the other hand, other members have their roots uniquely in the private sector, having been set up by national partnerships of industry associations.

Therefore, ISO is able to act as a bridging organization in which a consensus can be reached on solutions that meet both the requirements of business and the broader needs of society, such as the needs of stakeholder groups like consumers and users.

For everything you'd ever want to know about ISO—including more about the organization's history, how you can start the certification process at your plant, and which standards should be applicable to your organization—visit their home page at http://www.iso.ch/ for detailed information.

Lean Manufacturing

Lean is a quality philosophy that strives to minimize consumption of resources that add no value to the finished product. Its focus is waste from all areas of production from labor, materials, energy, time, inventory, and so on, as well as reaching deep into the organization.

MRO—Maintenance, Repair, and Operations (or Overhaul)

MRO, the generic term for just about everything in the plant engineering and maintenance world, appears to have a product-based implication. That is, people talk about "MRO sourcing" and "MRO procurement" to mean searches for the kinds of products and supplies that help plant professionals do their jobs. An important sub-branch of this industry is e- MRO—that is, the buying and selling of these products online.

PdM—Predictive Maintenance

PdM, one of the most popular terms in the maintenance field, covers a wide range of practices, all of which try to refute the old adage, “If it ain’t broke, don’t fix it.” PdM practitioners follow a credo more like, “Don’t wait for it to actually break before you fix it—figure out when it is *going* to break and make sure you don’t have to fix it in the middle of production.”

From http://www.plant-maintenance.com/terminology.shtml, **predictive maintenance** can be said to be an equipment maintenance strategy based on measuring the condition of equipment in order to assess its present condition, predict its remaining useful life, and determine an expected failure time in the future and then taking ongoing appropriate action to avoid the failure and its consequences. The condition of equipment could be monitored using condition monitoring, statistical process control techniques, by monitoring equipment performance, or through the use of the human senses. The terms condition-based maintenance, on-condition maintenance, and predictive maintenance could be used interchangeably.

As the name implies, predictive maintenance anticipates equipment outages rather than reacting to them. Benefits include fuller useful life for equipment and lower backup inventory. It goes beyond preventive maintenance, which at least strives to shift plant downtime to noncritical periods. Initial cost of predictive monitoring systems tends to be high, but much less than forced reactive maintenance due to just one serious outage of a manufacturing line. In an era of intensive competition, where asset usage and plant operating efficiency must be maximized, it is predictive maintenance that should be a tool along with reliability centered maintenance.

Diagnostic equipment is central to the PdM methodology, and therefore it is no surprise that there are thousands of products that enable users to anticipate machine failure. Software—like CMMS, ERP, and EAM packages—is a big part of this.

PM—Preventive Maintenance

In his 1998 book, *Developing Performance Indicators for Managing Maintenance* (Industrial Press), Terry Wireman has this to say about PM:

> The preventive maintenance program is the key to any successful asset management process. The preventive maintenance program reduces the amount of reactive maintenance to a level low enough that the other initiatives in the asset management process can be effective. However, most companies in the United States have problems keeping their PM programs focused. In fact, surveys have shown that only 20 percent of the companies in the United States feel their PM programs are effective.

Historically; PM was introduced in the United States in the 1950s and then adopted into the Japanese philosophy of TPM (see below). PM is sometimes seen as an outmoded concept today, having been supplanted by more recently honed philosophies like RCM, TPM, and PdM, but its general foundation of what TPM guru Seiichi Nakajima calls “time-based maintenance featuring periodic inspection, servicing and overhaul” is still the basis for many maintenance initiatives today. Regarding overhauling equipment, it is now being more recognized by industry to overhaul equipment based on predictive analysis and inspection and overhaul as needed, not on a fixed cyclical time parameter.

QCP—Quick Change Process

Quick change process (Figure 1) can be defined as all those tasks that must be done quickly with accuracy and precision when changing from one product to another or one

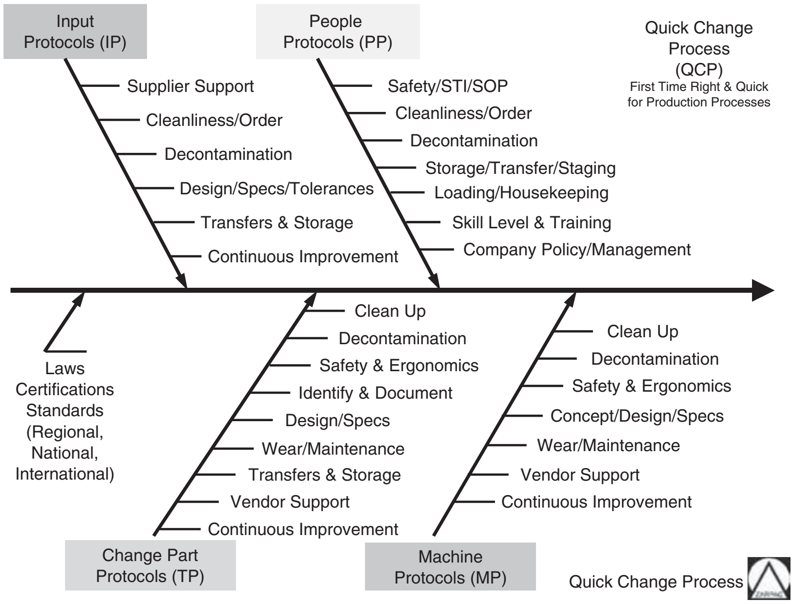

Figure 1. An overview of the quick change process.

SKU to another. To accomplish this requires the proper execution of associated tasks that are related to a given SKU. The main tasks are made up of:

1. Offline preparatory, documentation, and ready events.
2. Purge-out activities.
3. Change-out activities or changeover.
4. Run-up or start-up.

The interrelationship of all these tasks and their subtasks involved in the change process can be very complex. A review of this complexity will be done, along with discussion of why changing the packaging process to be quick change is a coordinated holistic effort.

Today the change-out process has to be taken seriously and integrated into company policy in order to:

- Develop a just-in-time or on-demand production philosophy.
- Increase their margins and profits.
- Run a large variety of different products on the same line.
- Demonstrate control to regulatory groups.
- Maintain and increase market share.

Quick change process is fundamentally a significantly modified version of single minute exchange of die (SMED) philosophy and techniques expanded and targeted to production facilities especially related to packaging, blow molding, and converting industries. SMED uses philosophical concepts and industrial engineering techniques to facilitate the quick exchange of die sets in stamping operations, as found in the automotive industry.

RCM—Reliability-Centered Maintenance

There is a whole sub-industry in the maintenance field centered on RCM and its offspring, RCM2. Reliability can be defined as “the process of managing the interval between failures. If availability is a measure of the equipment uptime or conversely the duration of downtime, reliability can be thought of as a measure of the frequency of downtime.

RCM thinking and practice began in the commercial airline industry—a field where “downtime” has some pretty unfortunate connotations—in the 1960s. In the following decades, two engineers, Stanley Nowlan and Howard Heap of United Airlines, published a study on the subject that established it as a standard maintenance practice.

There is likely nobody who has done as much to spread the cause of RCM and RCM2 as John Moubray, who, through his Aladon consulting firm (www.aladon.co.uk), has worked with plants worldwide on reliability-based initiatives. He defines RCM2 as “a process used to decide what must be done to ensure that any physical asset, system or process continues to do whatever its users want it to do.”

SCM—Supply Chain Management; or ISCM—Integrated Supply Chain Management

Always a tough one to define—there are several competing theories as to where the industrial chain of raw goods, manufacturing, and distribution actually starts and ends. Practitioners have, within the last few years, taken to referring to “integrated supply chain management” (ISCM) just to further confuse the issue, but basically they are the same.

> ISCM is a process-oriented, integrated approach to procuring, producing, and delivering products and services to customers. ISCM has a broad scope that includes sub-suppliers, suppliers, internal operations, trade customers, retail customers, and end users. ISCM covers the management of material, information, and funds flow:

You can find an excellent overview of the subject in the “Supply Chain Management Review” online magazine site at: http://www.manufacturing.net.

Six Sigma

It is a systematic quality program that strives to limit defects to three standard deviations on either side of the mean or a total of six sigma. Sigma is just a term for one standard deviation about the mean of a significant population of measurements of a process variable. One of the major focuses of Six Sigma is to reduce process variation. In most companies, quality loss will be by far the smallest of the OEE losses. A Six Sigma or equivalent program may be necessary to maintain focus on quality improvements.

SPC—Statistical Process Control and SQC Statistical Quality Control

Statistical process control (SPC) and statistical quality control (SQC) methodology is one of the most important analytical developments available to manufacturing in this century. SPC has come to be known as an online tool providing close-up views of what’s happening to a process at the moment. SQC provides offline tools to support analysis and decision-making to help determine if a process is stable and predictable from shift to shift, day in and day out, and from supplier to supplier. When SPC and SQC tools work together, users see the current and long-term picture about processing performance. SPC provides online tools that permit a close-up view of what’s currently happening to a process. SQC provides offline tools to support analysis and decision-making about process stability over time.

Before SPC, products were inspected after they were completed and defective products were discarded or reworked. The idea behind continuous improvement is to focus on designing, building, and controlling a process that makes the product correctly the first time at the point of manufacture.

How to Improve Using SPC and SQC

Key to improving a process is removing as much variation as possible. When products and services are delivered with minimal variation, customer requirements and expectations are met. Manufacturers applying SPC and SQC techniques rely on a variety of methods, charts, and graphs to measure, record, and analyze processes to reduce variations. In general, processes achieving the most benefit from SPC and SQC are products with:

1. Highly repetitive manufacturing processes.
2. High-volume production and low margins.
3. Narrow tolerances.

To make SPC and SQC work, key parameters indicating product variations are measured and recorded. For example, key parameters for a roll of cloth could include shrinkage, color, strength, and flaws per yard (meter). SQC methods are used to analyze recorded data and establish which variations are a natural part of the process and which unusual variations are caused by external factors, such as variations in raw materials.

SPC and SQC Tools

Control charts are a fundamental tool of SPC and SQC and provide visual representation of how a process varies over time or from unit to unit. Control limits statistically separate natural variations from unusual variations. Points falling outside the control limits are considered out-of-control and indicate an unusual source of variation.

Performance improvements of personal computer hardware and software permit real-time data collection, number crunching, and graphing. Providing SPC information in real-time allows operators to make adjustments or to schedule maintenance on an as-needed basis. SPC and SQC are an effective part of continuously improving a manufacturing process. When measurements are accurately collected and analyzed, improvements are identified and implemented, and controls established to ensure improvements are permanent and the process is well on its way to meeting quality requirements.

Process capability Cp or Cpk is a process that is used within the SPC environment. It is a process that is a unique combination of tools, materials, and methods, and people engaged are producing a measurable output; for example a manufacturing line for machine parts. All processes have inherent statistical variability that can be evaluated by statistical methods. The process capability is a measurable property of a process. It is usually reported in terms of the inherent variability of a process and its output.

Two parts of process capability are: (1) Measure the variability of a process and (2) compare that variability with a proposed specification or product tolerance.

Process capability compares the output of an *in-control* process to the specification limits by using *capability indices*. The comparison is made by forming the ratio of the spread between the process specifications (the specification "width") to the spread of the process values, as measured by 6 process standard deviation units (the process "width").

The process capability index uses both the process variability and the process specifications to determine whether the process is "capable."

We are often required to compare the output of a stable process with the process specifications and make a statement about how well the process meets specification. To do this, we compare the natural variability of a stable process with the process specification limits.

A capable process is one where almost all the measurements fall inside the specification limits. This can be represented pictorially by the plot below:

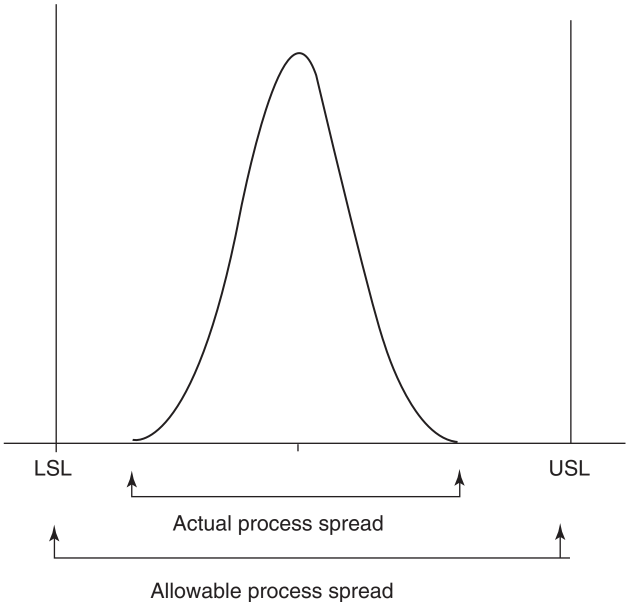

There are several statistics that can be used to measure the capability of a process: C_p, C_{pk}, and C_{pm}.

Most capability indices estimates are valid only if the sample size used is "large enough." Large enough is generally thought to be about 50 independent data values. The Cp, Cpk, and Cpm statistics assume that the population of data values is normally distributed. This is displayed by the graph above in which there is a two-sided specification, $\bar{X}$ and σ are the mean and standard deviation, respectively, of the normal data and USL, LSL, and T are the upper and lower specification limits and the target value, respectively. References are

http://www.itl.nist.gov/div898/handbook/pmc/section1/pmc16.htm or

http://www.isixsigma.com/st/process_capability/ or

Pyzdek, T, *Quality Engineering Handbook*, 2003, ISBN 0824746147

Bothe, D. R., *Measuring Process Capability*, 2001, ISBN 0070066523

Godfrey, A. B., *Juran's Quality Handbook*, 1999, ISBN 007034003

ASTM E2281, Standard Practice for Process and Measurement Capability Indices

TPM—Total Productive Maintenance

In the trendsetting 1982 book *TPM Tenkai* (which was translated into English as *TPM Development Program: Implementing Total Productive Maintenance* and published in 1989 by Productivity Press), editor Seiichi Nakajinia writes that in the years during and immediately following World War II, Japanese industrial managers sought to compete in the world marketplace by improving on the quality of their products. Building on the American PM model, the Japanese developed the field of TPM in the 1970s—most notably in the Toyota automotive plants, as a way of furthering refining their maintenance practice. The overall aim of TPM is "a double goal—zero breakdowns and zero defects."

Nakajinia says that TPM was defined in 1971 by the Japan Institute of Plant Engineers with these 5 goals in mind:

1. Maximize equipment effectiveness (in improving overall efficiency).
2. Develop a system of productive maintenance for the life of the equipment.
3. Involve all departments that plan, design, use, or maintain equipment in implementing TPM (engineering and design, production, and maintenance).
4. Actively involve all employees from top management to shop floor workers (Top down approach).
5. Promote TPM through motivation management: autonomous small-group activities.

For overviews of TPM, go to *NASA's* site at www.larc.nasa.gov/ or search for TPM.

Other Performance-Enhancing Methodologies

ABC/M	Activity-Based Costing/Management
BPI	Business Process Improvement
BPR	Business Process Reengineering
CI	Continuous Improvement
EAM	Enterprise Asset Management
ERP	Enterprise Resource Planning
JIT	Just-in-Time (manufacturing)
LCC	Life Cycle Costing
LEAN	Lean production or manufacturing
MES	Manufacturing Execution System
MP	Maintenance Prevention
MPI	Maintenance Performance Indicators
MRP	Material Requirements Planning (MPR-I and MPR-II)
MSDS	Material Safety Data Sheet
MTBF	Mean Time Between Failure
MTTR	Mean Time to Repair (MTOF—Mean Time of Failure)
RCAF	Root Cause Analysis of Failure
RCD	Reliability-Centered Design
SMED	Single Minute Exchange of Dies
TCO	Total Cost of Ownership
TMM	Total Maintenance Management
TQM	Total Quality Management
ZD	Zero Downtime

BIBLIOGRAPHY

1. P. J. Zepf, P. Eng., CPP, *How to Implement Performance Measurements into a Production Process*, Zarpac Inc., Oakville, Ontario, Canada, 2002, http://www.zarpac.com.
2. T. J. Zepf, *The Art of Work*, Tanis Media, Oakville, Ontario, Canada, 2006, www.amazon.com or http://www.tanismedia.net.
3. A. B. Godfrey, *Juran's Quality Handbook*, 5th edition, McGraw-Hill, New York, 1999.
4. T. Pyzdek, *Quality Engineering Handbook*, 2003.
5. D. R. Bothe, *Measuring Process Capability*, ISBN 0070066523, 2001.
6. W. Kaydos, *Operational Performance Measurement, Increasing Total Productivity*, CRC Press LLC, Boca Raton, FL, 1998.
7. E. E. Lewis, *Introduction to Reliability Engineering*, 2nd edition, John Wiley & Sons, New York, 1996.
8. J. M. Moubray, *Reliability-Centered Maintenance*, 2nd edition, Industrial Press, New York, 1997.
9. J. D. Oleson, *Pathways to Agility, Mass Customization in Action*, John Wiley & Sons, New York, 1998.
10. D. A. Shafer, *Successful Assembly Automation*, *A Development and Implementation Guide*, Society of Manufacturing Engineers, Detroit, MI, 1999.
11. W. Soroka, *Fundamentals of Packaging Technology*, 3rd edition, Institute of Packaging Professionals (IoPP), Naperville, IL, 2002.
12. T. Wireman, *Developing Performance Indicators for Managing Maintenance*, Industrial Press, New York, 1998.
13. O. Kwon, *New methodology for Measuring equipment performance and managerial effect in TPM*. PhD. Thesis, Department of Industrial Systems and Information Engineering, Graduate School, Korea University.

PACKAGING OF FOOD

GORDON L. ROBERTSON
Food•Packaging•Environment,
Brisbane, Australia

INTRODUCTION

Role of Food Packaging

Food packaging is essential and pervasive: It is essential because without packaging the safety and quality of food would be compromised, and it is pervasive because almost all food is packaged in some way. Food packaging performs a number of disparate tasks (1). It protects the food from contamination and spoilage; it makes it easier to transport and store foods; and it provides uniform measuring of contents. By allowing brands to be created and standardized, it makes advertising meaningful and makes large-scale distribution and mass merchandising possible. Food packages with dispensing caps, sprays, reclosable openings, and other features make products more usable and convenient.

Functions and Attributes of Food Packaging

Four primary and interconnected functions of packaging have been identified: containment, protection, convenience, and communication (1).

Containment. This function of packaging is so obvious as to be overlooked by many, but it is the most basic function of packaging. Food products must be contained before they can be moved from one place to another. The containment function of packaging makes a huge contribution to preventing losses from the myriad of foods that are moved from one place to another on numerous occasions each day.

Protection. This is often regarded as the primary function of the package: to protect its contents from outside environmental effects, be they water, water vapor, gases, odors, microorganisms, dust, shocks, vibrations, compressive forces, and so on, and to protect the environment from the product.

For the majority of food products, the protection afforded by the package is an essential part of the preservation process. For example, aseptically packaged milk in paperboard laminate cartons only remains aseptic for as long as the package provides protection; vacuum-packaged meat will not achieve its desired shelf life if the package permits oxygen to enter. In general, once the integrity of the package is breached, the product is no longer preserved.

Freedom from harmful microbial contaminants at the time of consumption can also be influenced by the package. Firstly, if the packaging material does not provide a suitable barrier around the food, microorganisms can contaminate the food and make it unsafe. Microbial contamination can also arise if the packaging material permits the transfer of, for example, moisture or oxygen from the atmosphere into the package. In this situation, microorganisms present in the food but presenting no risk because of the initial absence of moisture or oxygen may then be able to grow and present a risk to the consumer.

Packaging also protects or conserves much of the energy expended during the production and processing of the product. For example, to produce, transport, sell, and store 1 kg of bread requires 15.8 MJ (megajoules) of energy. This energy is required in the form of transport fuel, heat, power, and refrigeration in farming and milling the wheat, baking and retailing the bread, and distributing both the raw materials and the finished product. To produce the polyethylene bag to package a 1 kg loaf of bread requires 1.4 MJ of energy. This means that each unit of energy in the packaging protects 11 units of energy in the product. While eliminating the packaging might save 1.4 MJ of energy, it would also lead to spoilage of the bread and a consequent waste of 15.8 MJ of energy (1).

Convenience. Modern industrialized societies have brought about tremendous changes in lifestyles, and the packaging industry has had to respond to those changes that have created a demand for greater convenience in household products: foods that are pre-prepared and can be cooked or reheated in a very short time, preferably without removing them from the package; condiments that can be applied simply by pump-action packages; dispensers for sauces or dressings which minimize mess; reclosable openings on drink bottles to permit consumption on the go, and so on. Thus packaging plays an important role in allowing products to be used conveniently.

Two other aspects of convenience are important in package design. One of these can best be described as the apportionment function of packaging. In this context, the package functions by reducing the output from industrial production to a manageable, desirable "consumer" size. An associated aspect is the shape (relative proportions) of the primary package in relation to convenience in use by consumers (e.g., easy to hold, open, and pour as appropriate) and efficiency in building into secondary and tertiary packages. Packaging plays a very important role in permitting primary packages to be unitized into secondary packages (e.g., placed inside a corrugated case) and then for these secondary packages to be unitized into a tertiary package (e.g., a stretch-wrapped pallet). As a consequence of this unitizing function, materials handling is optimized since only a minimal number of discrete packages or loads need to be handled.

Communication. There is an old saying that "a package must protect what it sells and sell what it protects"; that is, the package functions as a "silent salesman." The modern methods of consumer marketing would fail were it not for the messages communicated by the package through distinctive branding and labeling, enabling supermarkets to function on a self-service basis. Consumers make purchasing decisions using the numerous clues provided by the graphics and the distinctive shapes of the packaging. Other communication functions of the package include (a) a UPC (Universal Product Code) that can be read accurately and rapidly using modern scanning equipment at retail checkouts and (b) nutritional information on the outside of food packages which has become mandatory in many countries.

Attributes. There are also several attributes of packaging that are important (2). One (related to the convenience function) is that it should be efficient from a production or commercial viewpoint—that is, in filling, closing, handling, transportation, and storage. Another is that the package should have, throughout its life cycle from raw material extraction to final disposal after use, minimal environmental impacts. A third attribute is that the package should not impart to the food any undesirable contaminants. Although this last attribute may seem self-evident, there has been a long history of so-called food contact substances migrating from the packaging material into the food (3). For many years the solder used in three-piece metal cans resulted in lead migrating into some foods; the switch to welded side seams eliminated this source of lead. Plasticizers have also migrated into foods—for example, phthalates (4), as well as monomers [e.g. styrene monomer (5)], catalysts [e.g., antimony from PET bottles (6)], and photoinitiators from printing inks [e.g., ITX (7)]. Not surprisingly, food packaging materials are highly regulated to ensure consumer safety.

DETERIORATIVE REACTIONS IN FOODS

Foods are frequently classified on the basis of their stability as nonperishable, semiperishable, and perishable. An example of the first classification is sugar; provided that it is kept dry, at ambient temperature and free from contamination, it should have a very long shelf life. However, few foods are truly nonperishable, and an important factor influencing their perishability is the packaging.

For example, hermetically sealed and heat processed (e.g., canned) foods are generally regarded as nonperishable. However, they may become perishable under certain circumstances—for example, if the can seams are faulty, or if there is excessive corrosion resulting in internal gas formation and eventual bursting of the can. Foods with low moisture content, such as dried fruits and vegetables and baked goods, are classified as semiperishable. Frozen foods, though basically perishable, may be classified as semiperishable, provided that they are properly stored at freezer temperatures. The majority of foods (e.g., flesh foods (such as meat and fish), milk, eggs, and most fruits and vegetables) are classified as perishable unless they have been processed in some way. Often, the only form of processing that such foods receive is to be packaged and kept under controlled temperature conditions.

Deteriorative reactions occur in foods during processing and storage, and they combine to affect food quality. These reactions can be biochemical (typically enzymic), chemical, physical (typically as a result of moisture gain or loss), and biological (both microbiological and macrobiological due to insect pests and rodents). Knowledge of the kinds of changes that influence food quality is an important first step in developing food packaging that will minimize undesirable changes in quality and maximize the development and maintenance of desirable properties. Once the nature of the reactions is understood, knowledge of the factors that control the rates of these reactions is necessary in order to fully control the changes occurring in foods during storage—that is, while packaged. The nature of the deteriorative reactions in foods, along with the factors that control the rates of these reactions, has been reviewed in detail elsewhere (1).

The rates of deteriorative reactions of particular foods are influenced by two factors: the nature of the foods and their surroundings. These factors are referred to as intrinsic and extrinsic parameters. Intrinsic parameters are an inherent part of the food and include water activity (a_w), pH, redox (oxidation–reduction) potential (E_h), oxygen content, and product formulation including the presence of any preservatives or antioxidants. The a_w of a particular food can affect the rates of deteriorative reactions in different ways; for example, the rate of nonenzymic browning peaks at around $0.65\,a_w$ while the rate of autoxidation of lipids decreases as a_w rises from zero to 0.3 and then increases with further rises in a_w. The destruction or inhibition of enzymes and microorganisms is necessary for shelf-stable, high moisture content ($a_w \sim 0.85$–1.0) foods, and this can be achieved through the selection of suitable packaging materials and the manipulation of extrinsic factors.

Extrinsic factors that control the rates of deteriorative reactions include temperature, relative humidity (RH), gas atmosphere, and light; packaging can influence the impact of these factors on the rates of deteriorative reactions to varying degrees, depending on the specific packaging material.

The RH of the ambient environment is important and can influence the a_w of the food unless the package provides a moisture barrier. Many flexible plastic packaging materials provide good moisture barriers but none are completely impermeable, thus limiting the shelf life of low-a_w foods. The presence and concentration of gases in the environment have a considerable influence on the growth of microorganisms, and modifying the atmosphere inside the package is widely used. Increased concentrations of gases such as CO_2 are used to retard microbial growth and thus extend the shelf life of foods. Furthermore, vacuum packaging (i.e., removal of air (and thus O_2) from a package prior to sealing) can also have a beneficial effect by preventing the growth of aerobic microorganisms.

The deterioration of packaged foods depends largely on transfers that may occur between the internal environment inside the package and the external environment that is exposed to the hazards of storage and distribution. For example, there may be transfer of water vapor from a humid atmosphere into a dried product, or transfer of an undesirable odor from the external atmosphere into a high fat product, or development of oxidative rancidity if the package is not an effective O_2 barrier. As well, flavor compounds can be absorbed by some types of plastic packaging materials, a phenomenon referred to as scalping (8).

INDICES OF FAILURE

In designing suitable packaging for foods, it is important to clearly define the indices of failure (IOF) of the food—that is, the quality attributes that will indicate that the food is no longer acceptable to the consumer. These might be development of rancid flavors in cereals due to oxidation; loss of red color (bloom) in chilled beef due to depletion of oxygen; reduction in carbonation in bottled soda due to permeation of CO_2 through the bottle wall; caking of instant coffee due to moisture ingress; development of microbial taint in chilled poultry; moisture loss in green vegetables, resulting in wilting; and loss of vacuum in canned berry fruits due to hydrogen gas production with consequent bulging of the can ends.

Once the IOFs for a particular food have been defined, the next step is to attempt to quantify the magnitude of the particular degradation—for example, how much moisture or O_2 can react with the food before it becomes unacceptable. The final step is to ascertain which (if any) of the IOFs might be influenced by the packaging material since packaging cannot prevent all deteriorative reactions in foods. If, for example, the IOF of a snack food was loss of crispness, then the packaging material could influence this, depending on the extent to which it permitted the ingress of moisture. Different plastic films, for example, have different WVTRs; thus the shelf life obtained will vary, depending on the particular plastic selected. Similar considerations apply to foods where the IOF is oxidation. However, it is not just the packaging material per se that can influence shelf life; the method of filling the product into the package is also important. For example, with roasted and ground coffee, vacuum filling into metal cans will remove 95% or more of the O_2 from the can compared with inert gas flush packing in plastic foil laminate pouches which will remove or displace 80–90% of the O_2 in the package. The residual O_2 in the package at the time of filling will have a major influence on shelf life regardless of the O_2 barrier properties of the package itself.

Data on the WVTR and OTR of various plastics are widely available. However, such data are often determined on flat samples of film rather than actual packages where creasing and sealing can adversely affect barrier properties. The dimensions of the package for a given weight of food can have a large influence on shelf life. While a spherical shape will minimize the surface area of the package (and thus the quantity of moisture or O_2 that will permeate into the package), it is not a practical shape for commercial use; in practice, most packages tend to be rectangular or cylindrical. Extremely thin packages have a much greater surface area:volume ratio and thus require a plastic with better barrier properties to get the same shelf life than if the same product were packaged in a thicker format. For the same product packaged in different sized packages using the same plastic material, the smallest package will have the shortest shelf life because the package surface area:volume ratio increases with decrease in package size.

PACKAGING OF MAJOR FOOD GROUPS

Space does not permit a detailed description of the IOFs and typical packaging materials used for the wide variety of foods available to consumers today; such detail can be found elsewhere (1). Instead the major food groups and their packaging will be briefly considered.

Flesh Foods

Flesh foods such as meats, poultry, and seafood are subject to rapid microbial spoilage due to their high pH and a_w. Oxidation of fat is also a problem, especially with pork and poultry; another problem is oxidation of pigments in red meats.

Beef. The importance of color as a marketing attribute of red meat is well established, especially for self-service retailing. Consumers, used to seeing bright red meat prepared for sale, associate this color with good eating quality, although there is little correlation between the two. This association of the color of red meat (both in the chilled and frozen form) with freshness has been the dominant factor underlying retail meat marketing. The loss of this bright red color, known as loss of "bloom" in the industry, is affected by many factors, although the consumer will usually relate the color loss to bacterial growth. Because of the importance of meat color, various methods of transportation, distribution, and packaging have evolved which optimize the maintenance of a desirable meat color.

The color of fresh meat depends chiefly on the relative amounts of the three pigment derivatives of myoglobin present at the surface: myoglobin (Mb), also referred to as deoxymyoglobin; oxymyoglobin (O_2Mb); and metmyoglobin (MetMb). Mb is purple in color and predominates in the absence of oxygen; O_2Mb is bright red in color and results when Mb is oxygenated or exposed to oxygen, producing the familiar "bloom" of fresh meat. MetMb is brown in color and exists when the oxygen concentration is between 0.5% and 1%, or when meat is exposed to air for extended periods of time. The color of meat as perceived by the consumer is primarily determined by factors such as the concentration and chemical form of the myoglobin, the morphology of the muscle structure, and the ability of the muscle to absorb or scatter incident light. To preserve red meat, the objective is to retard spoilage, permit some enzymic activity to improve tenderness, retard weight loss, and ensure an O_2Mb or bright red color at the consumer level.

In distribution, most red meat is packaged under vacuum in high O_2 and water vapor barrier flexible packaging materials to retard deterioration. Vacuum packaging achieves its preservative effect by maintaining the product in an O_2-deficient environment (nominally less than 500 ppm). Any residual O_2 is rapidly consumed by meat and muscle pigments, and CO_2 is produced as the end product of tissue and microbial respiration. At the retail level, highly oxygen-permeable flexible packaging permits restoration of the bright red O_2Mb color while retarding the passage of water vapor.

Vacuum packaging has the inherent disadvantage that both package and meat are subjected to mechanical strain. Mechanical pressure on the meat may increase drip loss; and if bone is present and not adequately covered with a suitable material, the pack may be ruptured. As an alternative to vacuum packaging, attempts have been made to store meat under various gaseous atmospheres, a process referred to as modified atmosphere packaging or MAP. The strain on the packaging material can be alleviated by introducing another gas or mixture of gases after evacuation and before sealing. The intention has generally been to preserve the fresh meat color (O_2Mb) and prevent anaerobic spoilage by using high concentrations of O_2 (50–100%) along with 15–50% CO_2 to restrict the growth of *Pseudomonas* and related bacteria; EVOH is commonly used as the barrier layer in coextruded films.

Poultry. Raw poultry meat is a perishable commodity of relatively high pH (5.6 for breast muscle and up to 6.4 for leg muscle) which readily supports the growth of microorganisms when stored under chill or ambient conditions. The shelf life of such meat depends on the combined effects of certain intrinsic and extrinsic factors, including the numbers and types of psychrotrophic spoilage organisms present initially, the storage temperature, muscle pH and type (red or white), as well as the kind of packaging material used and the gaseous environment of the product.

The vacuum packaging of poultry carcasses, cuts, and other manufactured products can extend shelf life, provided that the product is held under chill conditions. Vacuum packaging of poultry meat leads to the development of mainly lactic acid bacteria, sometimes accompanied by cold-tolerant coliforms. Although vacuum packaging may be used to encourage the development of an atmosphere around the product which delays microbial spoilage, other systems in use involve addition of at least 20% CO_2, to either individually packaged items or bulk packs of varying size in an O_2-impermeable plastic film.

Seafood. Flesh foods such as fish and shellfish are highly perishable due to their high a_w, relatively high pH, and the presence of autolytic enzymes which cause the rapid development of undesirable odors and flavors.

The effects of MAP on seafood are similar to those described above for meat and poultry. Vacuum and MAP (including flushing with N_2 and CO_2), which suppress the normal spoilage bacteria that cause off-odors and flavors, extend the shelf life of seafood.

Most studies of MAP of seafood indicate a shelf-life extension from a few days up to a week or more compared with air storage, depending on species and temperature. Differences in spoilage microflora and pH are mainly responsible for the observed differences in shelf life, provided that similar gas:product ratios are used. Although some claims have been made of a shelf life of up to 3–4 weeks for the refrigerated storage of MAP fish, this is generally considered to be unrealistic. Target shelf lives of these products are typically in the range of 10–14 days, but may reach 18–20 days if the temperature is controlled very closely just above freezing point.

High-temperature abuse (21–27°C) for periods of 12–24 h is a major concern since MAP fish generally do not become overtly spoiled under these conditions yet may be toxic, whereas fish held at the same temperatures under similar aerobic conditions start to become putrid before toxin production occurs. If MAP fish are held at temperatures greater than 10°C, strong spoilage signals may not develop in advance of *C. botulinum* toxin production.

The use of active packaging technologies such as O_2 scavengers and CO_2 emitters does not improve microbial safety above that obtained by traditional MAP, and it gives little or no additional shelf life to fresh seafood products compared to MAP and vacuum packaging (9).

Horticultural Products

Fruits and vegetables are perishable products with active metabolism during the postharvest period. Their shelf life can be extended by, in simple terms, retarding the physiological, pathological, and physical deteriorative processes (generally referred to as postharvest handling). Fruits may be divided into climacteric and nonclimacteric types. Climacteric fruits are those in which ripening is associated with a distinct increase in respiration and ethylene production, with low temperatures greatly reducing the magnitude of the climacteric. Typical climacteric fruits include apples, pears, peaches, nectarines, bananas, mangoes, plums, tomatoes, and avocados. Ethylene is a natural plant hormone and plays a central role in the initiation of ripening; it is physiologically active in trace amounts (less than 0.1 ppm).

Aerobic respiration involves the oxidation of starch, sugars, and organic acids to simpler molecules (CO_2 and H_2O) with the concurrent production of energy (ATP and heat). If hexose sugar is used as the substrate, the overall equation can be written as follows:

$$C_6H_{12}O_6 + 6O_2 \rightarrow 6CO_2 + 6H_2O + \text{energy}$$

This equation suggests that if the CO_2 in the atmosphere were increased (or the O_2 decreased), the respiration rate would decrease and the storage life would be extended. Such is the case, and the application of this approach is the basis of MAP. The availability of absorbers of O_2, CO_2, C_2H_4, and water provide additional tools for the packaging technologist to use to maintain a desired atmosphere within a package. Fresh fruits and vegetables vary greatly in their relative tolerance to low O_2 concentrations and elevated CO_2 concentrations. Reduction of the O_2 concentration to less than 10% provides a tool for controlling the respiration rate and slowing down senescence, although an adequate O_2 concentration must be available to maintain aerobic respiration.

Minimally processed fruits and vegetables (MPFVs) are products that have the attributes of convenience and fresh-like quality, with their forms varying widely depending on the nature of the unprocessed commodity and how it is normally consumed. They are sometimes referred to as “fresh-cut” produce. Polymeric films are the most common materials used for the packaging of horticultural products including MPFVs; such films require a high permeability to gases to avoid the development of injurious atmospheres inside the package. This can typically be achieved by microperforation of the film to give holes with diameters ranging from 40 to 200 μm. In addition to enabling the creation of MA conditions, polymeric films provide other benefits including maintenance of high RH and reduction of water loss. In packages where it is not intended to create a MA, the main concern is to avoid anoxic conditions and condensation of water vapor inside the package. This is most easily achieved either by incomplete sealing or by perforation of the plastic packaging.

Dairy Products

Dairy products are derived from milk, which is usually not sterile. Pasteurization is a low-heat process to destroy disease microorganisms but not all microorganisms that could cause spoilage. Pasteurized dairy products must be maintained under refrigeration.

Milk is processed into a variety of products, all having different and varying packaging requirements. The simplest product is pasteurized milk where, after a mild heat treatment, the milk is filled into a variety of packaging media and distributed. Nonreturnable packages such as blow-molded HDPE bottles or LDPE-coated paperboard gabletop packages are most often used for packaging and distributing milk under refrigeration; the shelf life of such a product varies from 2 to 10 days. UHT milk is subjected to a more complex process and is aseptically packaged; the packaging is sophisticated (typically a paperboard laminate foil carton) and its shelf life can be up to 8 months at ambient temperatures. Cream is typically processed and packaged in a way similar to that of fluid milk and has a similar shelf life. Fermented dairy products, although being subjected to more complex processing operations, are also typically packaged in a manner analogous to that of fluid milk.

The other dairy products (butter, cheese, and powders) are quite different in nature when compared to fluid milk, and their packaging requirements are therefore also quite different. Butter is very susceptible to light-induced flavors, which results in off-flavors. Since butter is generally exposed to fluorescent light during storage in retail display cabinets, the packaging material has a marked effect on the amount of light transmitted and the related intensity of the oxidized flavor. Butter packaged in various types of conventional parchment papers develops objectionable levels of oxidized off-flavor after a few hours exposure in a supermarket display cabinet, while aluminum foil laminates are satisfactory even after 48 days of continuous exposure.

Cheese is the generic name for a group of fermented milk-based food products produced in at least 500 varieties throughout the world. With the exception of some soft cheeses, most cheese varieties are not ready for consumption at the end of manufacture but undergo a period of ripening (also referred to as curing or maturation) which varies from about 4 weeks to more than 2 years. The duration of ripening is generally inversely related to the moisture content of the cheese, although many varieties may be consumed at any of several stages of maturity depending on the flavor preferences of consumers (1).

The two key parameters contributing to the stability of cheeses are pH and a_w. However, neither of these parameters is low enough to ensure complete stabilization of the product, with the result that cheeses as a class lie between perishable foods on the one side and intermediate moisture foods on the other. While the packaging will have no influence on the pH of the cheese, the a_w of the surface (and ultimately the interior) of the cheese will be affected by the water vapor permeability of the packaging material. Two other key factors that must be considered in the packaging of cheese are the effect of light and O_2. Light initiates the oxidation of fats, even at temperatures found in refrigerated display cabinets, giving rise to off-flavors. In addition, the ingress of molecular O_2 through the packaging film is undesirable because it will contribute to the oxidation of fats and the growth of undesirable microorganisms. Thus packaging films for cheese must be sufficiently impermeable to O_2 to prevent fat oxidation and mold growth. The introduction of pure CO_2 into the package often produces the appearance of vacuum packaging after a certain period of storage as a result of absorption of CO_2 by the cheese as well as some loss by diffusion through the packaging material.

Cereals, Bakery Products, Snack Foods, and Candy

Cereals. Cereals are the fruits of cultivated grasses, with the principal cereal crops being wheat, barley, oats, rye, rice, maize, sorghum, and the millets. The presence of water and air renders grains susceptible to biochemical deterioration; grains are also subject to infestation from insects and rodents. It is essential that grain be dried to a moisture content corresponding to $0.70\,a_w$ or less prior to packaging and storage. Consumer packages for grain commonly consist of heat-sealed pouches made from LDPE film; these provide a satisfactory moisture barrier and result in the required shelf lives for the grains.

Breakfast cereals contain most of the whole grain in cooked or toasted form plus flavorings, vitamins, and minerals. There are five modes of deterioration to be considered when selecting suitable packaging materials for breakfast cereals. They are moisture gain resulting in loss of crispness; lipid oxidation resulting in rancidity and off-flavors; loss of vitamins; breakage resulting in an aesthetically undesirable product; and loss of aroma from flavored products. The shelf life of breakfast cereals depends to a large extent on the content and quality of the oil contained in them. Breakfast cereals are packaged in glassine, waxed glassine, or, mostly, polyolefin coextrusions in the form of pouches or bags within paperboard cartons. Sugared cereals are often packaged in aluminum-foil laminations to retard water vapor transmission.

Bakery Products. A wide variety of bakery products can be found on supermarket shelves, including breads, unsweetened rolls and buns, doughnuts, sweet and savory pies, pizza, quiche, cakes, pastries, biscuits, crackers, and cookies. It is useful to classify bakery products on the basis of their a_w and pH since these parameters are a good indication of the spoilage problems likely to be encountered. Microbial growth—in particular, mold growth—is the major factor limiting the shelf life of bakery products; chemical preservatives are used by the bakery industry to prevent or retard microbiological spoilage. Staling is the common description of the decreasing consumer acceptance of bakery products as they age, caused by changes in crumb other than those resulting from the action of spoilage organisms; it is the major mode of deterioration.

The objective in packaging bread is to maintain the bread in a fresh condition by preventing too rapid drying out without providing too good a moisture barrier, which would promote mold growth on a soggy crust. Vacuum packaging is not a suitable technology to extend the mold-free shelf life of most soft bakery products since the product is crushed under a vacuum. However, it has been used to prevent mold problems in flat breads and pizza crusts. An alternative to vacuum packaging is to modify the atmosphere inside the package. A range of gas mixtures has been used to extend the shelf life of bakery products, from 100% CO_2 to 50% CO_2 and 50% N_2.

Extensions of 3 weeks to 3 months at room temperature are achievable using appropriate mixtures of CO_2 and N_2.

Hard baked goods such as cookies and crackers generally have moisture contents within the range 1–5%, a_w values of about 0.1, and often a high fat content. Loss of crispness and development of rancidity are the two major IOFs. The typical material used for the packaging of cookies and crackers is OPP, either as plain or pearlized OPP film. If a superior O_2 barrier is required, acrylic-coated OPP is used, and sometimes one side is coated with PVC/PVdC copolymer rather than acrylic. Soft cookies are packaged in low WVTR laminations containing aluminum foil or metallized plastic film.

Snack Foods. Snacks foods comprise a very wide range of products including potato and corn chips, pretzels, popcorn, extruder puffed and baked/fried products, and rice-based snacks. Fried snack foods can consist of many different ingredients; but common to them all is fat, which is used as a processing agent to dehydrate the product or puff it and develop characteristic flavors. There are two major IOFs of fried snack foods: development of fat rancidity and loss of crispness. Thus a satisfactory package for fried snack foods would need to provide a good barrier to O_2, light and moisture.

Fried snacks foods are typically packaged in multilayer structures, although spiral-wound, paperboard cans lined with aluminum foil or a barrier polymer and sealed under vacuum with an LDPE/foil end are used for some specialty products that also require mechanical protection. The major mode of deterioration for extruded and puffed snacks is loss of crispness; for example, the critical a_w for puffed corn curl is 0.36. Many extruded and puffed snack foods are packaged in material identical to that for fried snack foods. However, since the major mode of deterioration is loss of crispness, a package that provides a good barrier to water vapor is the primary requirement.

Candy. The three basic types of candies are chocolate and hard and soft sugar. Chocolate is a suspension of finely ground roasted cocoa beans or cocoa mass and sugar particles in cocoa butter (the lipid fraction of the cocoa mass). Chocolates may be either solid, solid with inclusions such as nuts, or molded with centers. The chocolate acts as a water vapor barrier that helps protect the inclusions and fillings such as nuts, crisped rice, or liquid cherry, which are susceptible to water gain or loss. Oxidative and lipolytic rancidity are flavor defects, with the former coming from oxidation of unsaturated fats and the latter coming from enzymic hydrolysis of short-and medium-chain triglycerides. Cocoa butter contains tocopherols, which act as antioxidants and therefore confer a natural protection against oxidation during storage. Being high in fat, chocolate is very likely to absorb any foreign odors from the surrounding atmosphere. Thus suitable packaging materials must provide a good barrier to light, O_2, water vapor, and foreign odors. The most common material used to package blocks of chocolate is a laminate consisting of aluminum foil and LDPE, making it possible to heat seal the package; chocolate products are also packaged in pearlized OPP.

Hard candies consist almost entirely of sugar with added flavors and are heated under vacuum to reduce the moisture content to about 1%. They are extremely hygroscopic, hard, and fragile. Soft candies include jellies, marshmallows, and other crystallized products; they contain a matrix of water that can be lost as a consequence of evaporation, and so these products must be protected against water loss. An important difference in the mode of deterioration between the various candies is that crystallized products tend to dry out under normal storage conditions, while uncrystallized products tend to pick up moisture from the atmosphere. Sugar candies are sealed in packaging with a low WVTR such as cast polypropylene; individual twist wraps are also common for many candies.

Beverages

Beverages may be still or carbonated, alcoholic or nonalcoholic. The major categories are water, juices, carbonated soft drinks, and beer.

Water. The major deteriorative reaction in bottled water is microbial growth. To avoid this, the water is usually treated prior to bottling with chlorine or ozone. Glass bottles were long considered the container of choice for sparkling waters and carbonated soft drinks; but in recent years, PET bottles have gained an increasing share of this sector. The majority of still waters are now packaged in plastic containers, with five principal resin alternatives: PET, PVC, PP, HDPE, and PC.

Juices. The quality of a juice depends essentially on the species and maturity of the fresh fruit, the main factors influencing the quality being the sugar:acid ratio, the aroma volatiles, the phenolic components, and the ascorbic acid content. The four key deteriorative reactions in juices are microbiological spoilage, nonenzymic browning, oxidation resulting in loss or degradation of flavor components and nutrients (essentially ascorbic acid), and absorption of flavor compounds by the package. The rate of browning and nutrient degradation is largely a function of storage temperature.

For many years, juices were packed in metal cans using the hot-fill/hold/cool process to ensure that the juice was commercially sterile. The use of glass bottles is also widespread, with glass being the preferred packaging medium for high-quality juices. However, over recent years an increasing proportion of juices has been packaged aseptically, generally into laminates of plastic film/aluminum foil/paperboard. These products are then held at ambient temperatures and the shelf life and nutrient composition are greatly influenced by the barrier properties of the carton, the interactions of the juice with the carton, and the storage environment. The end of shelf life is related to the extent of nonenzymic browning and the sorption of key aroma and flavor compounds by the plastic in contact with the juice, with the latter process being referred to as “scalping.”

Flexible packaging is also used for juices; a variety of laminate constructions are available, the most common being LDPE-PET-alufoil-PET. For specific applications, EVOH, OPA, or PP can be included in the structure. Recent developments in barrier coatings for PET have led to increasing use of PET bottles for fruit juices and drinks, and this trend is likely to accelerate as production ramps up and costs come down. Frozen concentrated orange juice (42°Brix) is usually held at −12°C, at which temperature it is still liquid; typical packaging materials consist of a spiral wound paperboard tube with aluminum ends, or an aluminum can.

Carbonated Soft Drinks. Soft drinks are prepared almost exclusively using the pre-mix system whereby the blended syrup, after flash pasteurization if necessary, is mixed with carbonated, treated water prior to delivery to the filler. The degree of carbonation ranges from 1.5 to 5 volumes, each volume producing about one atmosphere of internal pressure. The two major deteriorative reactions in carbonated beverages are (a) loss of carbonation and (b) oxidation and/or acid hydrolysis of the essential flavor oils. The first is largely a function of the effectiveness of the package in providing a barrier to gas permeation, while the latter can be prevented to a large extent by the use of high-quality flavorings and antioxidants and by deaerating the mix prior to carbonation (1). Typical packaging for soft drinks are aluminum cans and PET bottles.

Beer. Beer is an alcoholic beverage made by brewing and fermentation from cereals (usually malted barley) and flavored with hops to give a bitter flavor. Owing to its low pH (about 4.0), microbial degradation is not usually a problem, and the use of pasteurization and aseptic cold filtration excludes wild yeasts which could thrive. However, during storage, beer can undergo irreversible changes leading to the appearance of haze, the development of off-flavors, and increased color. Flavor loss is accelerated in the presence of light and certain metal ions. Beer is particularly vulnerable to O_2, which causes significant flavor deterioration; ideally the O_2 level in beer should be less than 50 ppb immediately after packaging.

The traditional packaging media for beer was the glass bottle sealed with a crown closure; but today in many countries, two-piece DWI aluminum cans with a stay-on tab now outnumber bottles. A small but increasing quantity of beer is packaged in PET bottles containing an O_2 barrier to provide acceptable shelf life.

BIBLIOGRAPHY

1. G. L. Robertson, *Food Packaging Principles and Practice*, 2nd edition, CRC Press, Boca Raton, FL, 2006.
2. J. M. Krochta, in D. R. Heldman and D. B. Lund, eds., *Handbook of Food Engineering*, 2nd edition, CRC Press, Boca Raton, FL, 2007, pp. 847–927.
3. K. Grob, M. Biedermann, E. Scherbaum, M. Roth, and K. Rieger. *Crit. Rev. Food Sci. Nut.* **46**, 529–535 (2006).
4. M. Wormuth, M. Scheringer, M. Vollenweider, and K. Hungerbühler, *Risk Analysis* **26**, 803–824 (2006).
5. A. L. Baner in O.-G. Piringer and A. L. Baner, eds., *Plastic Packaging Materials for Food. Barrier Function, Mass Transport, Quality Assurance and Legislation*, Wiley-VCH, New York, 2000, pp. 427–443.
6. M. Haldimann, A. Blanc, and V. Dudler, *Food Additiv. Contam.* **24**, 860–868 (2007).
7. T. Rothenbacher, M. Baumann, and D. Fügel, *Food Additiv. Contam.* **24**, 438–444 (2007).
8. M. G. Sagilata, K. Savitha, R. S. Singhal, and V. R. Kanetkar. *Comp. Rev. Food Sci. Food Safety* **6**, 17–35 (2007).
9. M. Sivertsvik, in C. L. Wilson, ed., *Intelligent and Active Packaging for Fruits and Vegetables*, CRC Press, Boca Raton, FL, 2007, pp. 151–164.

PACKAGING OF FOOD FOR HIGH PRESSURE TREATMENTS

Rafael Gavara
Ramón Catalá
Pilar Hernández-Muñoz
Institute of Agrochemistry and
Food Technology, IATA-CSIC,
Packaging Laboratory,
Burjassot, Spain

High hydrostatic pressure processing (HPP) is a novel food preservation technology that is gaining commercial importance as a consequence of current consumption trends toward high-quality products with natural flavor and taste, fresh-like characteristics, and no preservatives. HPP presents unique advantages over conventional thermal treatments due to low-temperature processes that improve retention of food quality. Moreover, it is independent of product size and geometry, and the pressure effect is uniform and almost instantaneous; and although the HPP has been reported to affect the texture of the food product, other characteristics such as flavor, color, and nutritional value are largely maintained (1).

Food preservation through HPP basically consists on the application of hydrostatic pressures between 100 and 1000 MPa, with holding times typically between 0 and 3 min, at refrigeration and ambient temperature. Current HPP research is exploring future applications at subzero temperatures to more than 100°C and holding times up to 30 min. The simplest process consists of (a) heating (cooling) to the treatment temperature (b) pressurization, which produces an inherent adiabatic heating (c) pressure holding time, which can include heat transfer between the food, pressurizing fluid, pressure equipment, and the environment, and (d) depressurization, which results in an adiabatic cooling and final cooling (or heating) to product storage temperature (2). However, to attain the desired extent of the shelflife of foodstuffs by means of the inactivation of microorganisms and enzymes in a short treatment process, the HPP process can be very complex with successive changes of pressure, as occurs in pulsed high-pressure treatments (3).

Most HPP equipments work through batch processes, although a few commercial semicontinuous units for the treatment of liquid foods and sauces that may contain solids under 5 mm are under operation. In this latter case, the food product flows and fills the treatment vessel, which is then closed and pressurized. The treated product is then driven to an aseptic (or clean) packaging step. The food is not sterilized during the HPP treatment; therefore, HP treatment can be classified as a nonthermal pasteurization and can be used commercially for refrigerated, lowacid ($pH < 4.5$) or low-water-activity products (e.g., jams). Since the food is processed prior to packaging, no special requirements need to be fulfilled. Therefore, packaging solutions for the packaging of HPP-treated food in a semicontinuous unit are similar to those of aseptic packaging. Refer to the aseptic packaging section for packaging solutions.

The HPP treatments by batch processing present several differences with respect to the semicontinuous one, the most relevant being that the product is packaged before the treatment. Figure 1 presents a batch HPP scheme. The packaged product is introduced in the vessel, which is then filled with a pressure-transmitting fluid; this can be water or aqueous solutions of ethylene glycol, propylene glycol, or other soluble oils. Then the vessel is closed, and pressurization (100–1000 MPa) takes place by pumping additional pressure-transmitting fluid. After the treatment, pressure is released in a few seconds, the vessel is opened, the fluid may be removed, and the packages are removed, cleaned, and sent to the next packaging step.

Except for the case of foods processed by semicontinuous units, packaging is a key factor to the feasibility of high-pressure processing, because it must preserve the intrinsic qualities of the food products without losing integrity, barrier performance and mechanical characteristics. This section highlights the requirements that a food package has to fulfill to be used in high-pressure treatments, lists the effects of such preservation technology over packaging materials, and presents some of the most conventional solutions.

PACKAGING REQUIREMENTS

During the HPP process, the food packages are immersed in water or in aqueous solutions and exposed to high pressures. Therefore, besides typical requirements of food packaging such as airtightness, minimal food-packaging interactions, and adequate optical and barrier properties, the package must transmit the hydrostatic pressure to the packaged product, withstand the action of the pressurizing liquid, and resist the action of pressure without relevant changes. To transmit the hydrostatic pressure to the packaged product, flexible packaging is more convenient than rigid packaging. Rigid packages such as metal cans or glass bottles tend to fracture or become distorted as a result of the high pressure applied (4). The use of packaging structures designed with cellulosic or other hydrophilic materials at the outermost layer should be reconsidered since it could present signs of deterioration caused by the direct exposure to water.

It is then crucial to understand the effects of high pressure on relevant properties of plastic materials to ensure the safety of the foodstuffs along their shelflife. Isostatic pressure causes the food product to compress three-dimensionally up to approx 12% at 600 MPa.The package should follow this volume change without alterations. Rigid containers do not compress to this extent, and therefore they usually get distorted. On the other end of the spectrum, expanded polymeric materials such as expanded polystyrene or expanded polypropylene can be compressed a minimum of 80% due to the large percentage of air occluded in the package walls, and their use should be avoided.

PACKAGING SOLUTIONS

Many flexible packaging materials have been shown to withstand HPP without visible signs of integrity loss. One of the most important factors that have contributed to the success of plastic films and sheets is the availability of

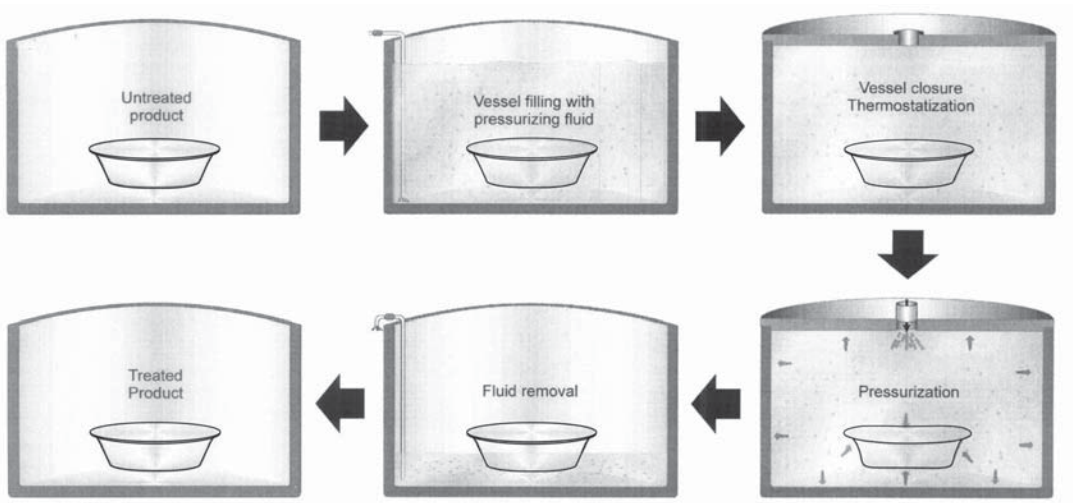

Figure 1. Scheme of a batch high hydrostatic pressure process.

multilayer structures. A suitable multilayer structure used to pre-package foods must have sufficient flexibility, resilience, and resistance to delamination during the compression process, because a loss of packaging integrity would result in major food safety and quality deterioration (5). Initially, the innermost layer of the structure should be selected to limit food–package interactions (unless the substance exchange is desired and beneficial; see Active Packaging) and to provide hermetic a seal. Heat-sealable materials such as polyolefins could be a good option, although other sealing process can widen the materials spectra (see the sealing section). The outermost layer of the structure should resist the action of the pressurizing fluid. With the exception of highly hydrophilic materials such as polyvinyl alcohol, most polymeric materials could be suitable. Reversed printed oriented polypropylene, polyester, or polyamide films can be good choices.

Finally, the barrier properties to oxygen can be tailored to the product requirement by varying the materials and the number of layers in the structure (see the barrier section). Many structures have been tested using PA, EVOH, PVOH, aluminum foil, or polymer films coated with aluminum, silicon oxide (SiOx), or aluminum oxide (AlOx). Most of these packaging structures have been tested with no relevant changes caused by the HPP treatment. The packages showed sufficient degree of flexibility and resilience to compensate for the reduction in volume, no significant changes in tensile strength being observed between controls and HPP treated samples.

Heat seal strength is a critical point in packages, because if any void is present or generated by the treatment along the seal of the package, the safety of the packaged food will be seriously compromised. In general, thermoplastic materials have been proven to withstand HPP without significant losses in sealability. In other technologies, such as in retortable food packages, the seal is exposed to high temperatures and pressure changes in both directions, which can affect and even break the sealing. However, the sealing is not exposed to such critical conditions in HPP treatment, since the package always receives the pressure from the outside and the temperature rarely reaches 70°C.

High-pressure-induced delamination has been observed in flexible packages made of composite materials and having relatively large headspace volumes. Gases reduce their volume during the HPP treatment much more than food and packaging materials, promoting tensions and failures. Headspace volumes should be minimized to reduce the chances of having seal damages, delaminations, and large deformations. The presence of large headspace volumes increases largely the time to obtain the required pressure since more pressurizing fluid has to be pumped in the vessel. Also the packaging design with materials of diverse nature can produce changes in packaging properties. Thus, aluminum and metal oxides present lower compressibilities than do polymeric materials. This difference can be responsible for the delamination and blistering observed in barrier structures containing aluminum layer or coatings which increase in delamination with exposure time and temperature (5, 6).

BARRIER PROPERTIES

The barrier properties are often the most relevant characteristic to be considered in the design of functional polymeric packages for food. Therefore, HPP-induced barrier changes can have a very negative impact concerning packaged food quality. In general, the permeability to oxygen, carbon dioxide, and water vapor do not change relevantly after the HPP treatment. Nevertheless, a large decrease of barrier has been observed in metalized films apparently due to the damage caused in the aluminum layer (4). It is also relevant to mention that HPP treatments produce much less damage than do conventional thermal treatments in the barrier properties of hydrophilic materials such as EVOH. The concurrence of low temperatures of treatment, shorter treatment period, and the presence of high pressure produces a much lower water sorption in those polymers, which results in the reduction of package plasticization and of the subsequent loss of barrier. The volume reduction of the voids present in the polymer (free volume) which takes place during the high-pressure treatment could be responsible for a decrease in solubility and a much slower molecular diffusion though the polymer matrix. These two parameters contribute to reduce the extent of mass transport through packages and food–package interactions. In agreement with this statement, migration studies showed that HPP treatment do not alter the migration values of flexible packaging structures (7).

Tests should be carried out to confirm the validity of a package for HPP treatments keeping in mind that, although most polymeric materials are suitable since their main properties are not modified, good sealing properties, design of the package structure with materials of similar compressibility, and the reduction of the package headspace volume will lead to a successful packaging solution.

BIBLIOGRAPHY

1. E. Palou, A. López-Malo, G. V. Barbosa-Cánovas, and B. G. Swanson, "High-Pressure Treatment in Food Preservation" in M. S. Rahman, ed., *Handbook of Food Preservation*, Marcel Dekker, New York, 1999. pp. 533–577.
2. J. A. Torres and G. Velazquez, "Hydrostatic Pressure Processing of Foods" in S. Jun and J. Irudayaraj, eds., *Food Processing Operations Modeling: Design and Analysis*, CRC Press, Boca Raton, FL, 2008, Chapter 7.
3. G. D. Alemán, M. Walker, D. F. Farkas, J. A. Torres, E. Y. Ting, S. C. Mordre, and A. C. O. Hawes, "Pulsed Ultra High Pressure Treatments for Pasteurization of Pineapple Juice," *J. Food Sci.* **61**, 388–390 (1996).
4. C. Caner, R. J. Hernandez, and M. A. Pascall. "Effect of High-Pressure Processing on the Permeance of Selected High-Barrier Laminated Films," *Packag. Technol. Sci.* **13**, 183–195 (2000).
5. C. Caner, R. J. Hernandez, M. A. Pascall, and J. Riemer, "The Use of Mechanical Analyses, Scanning Electrón Microscopy and Ultrasonic Imaging to Study the Effects of High-Pressure Processing on Multilayer Films," *J. Sci. Food Agric.* **83**, 1095–1103 (2003).

6. A. Schauwecker, V. M. Balasubramaniam, G. Sadler, M. A. Pascall, and C. Adhikari, “Influence of High-pressure Processing on Selected Polymeric Materials and on the Migration of a Pressure-Transmitting Fluid,” *Packag. Technol. Sci.* **15**, 255–262 (2002).
7. J. Dobiás, M. Voldrich, M. Marek, and K. Chudácková, “Changes of Properties of Polymer Packaging Films During High Pressure Treatment,” *J. Food Eng.* **61**, 545–549 (2004).

PALLETIZING

A pallet is a low platform used to stack or accumulate several smaller units of product so that they may be conveyed by mechanical means. Pallets may be made of wood (see Pallets, wood), plastic (see Pallets, plastic), or corrugated kraft board (see Pallets, expendable corrugated), and they are usually rectangular rather than square. The arrangement of product on the pallet (pallet pattern) is critical to an orderly, compact loading, and distribution system. Patterns correspond to the pallet shape and are designed to afford the maximum load in the minimum space without forfeiting structural strength. Pattern design may be restricted by the primary and secondary product packages, the shipping method and size of conveyance, as well as warehouse space.

The quantities of pallets and tiers also are determined by the shipping container, shipping method, and distributor space allotment. The second layer, or tier, may be exactly like the first, or rotated 180°, or it may be an entirely different pattern. Unless the cases are heavy and/or large, the pattern of the second layer is changed to form a load that will not break apart. Rotation by 180° is a common solution. The stacking strength of the load must be judged against the space limitations of the pattern. A column stack (each layer identical) with corners one above the other is strongest, but it is most likely to topple because the tiers are not interlocked. Many different pallet patterns are shown in Figure 1.

PALLETIZING

Once the pattern and number of tiers have been designed, the method of product-to-pallet transfer is determined. Hand palletizing is the most versatile method and is effective when loading is slow. Single-product, single-pattern, high-level palletization developed from hand palletization. Recent technological advances permit automated palletization of almost every product, but this process may not always be economical. The selection of a palletizer demands consideration of performance requirements and space limitations. The palletizer is an element in the total packaging/distribution system, and it should never be a limiting factor. The palletizer should be capable of speeds exceeding normal line speed by 5–10%, and change over time from product to product should be minimal. A fully automatic palletizer does not require an operator in attendance full time.

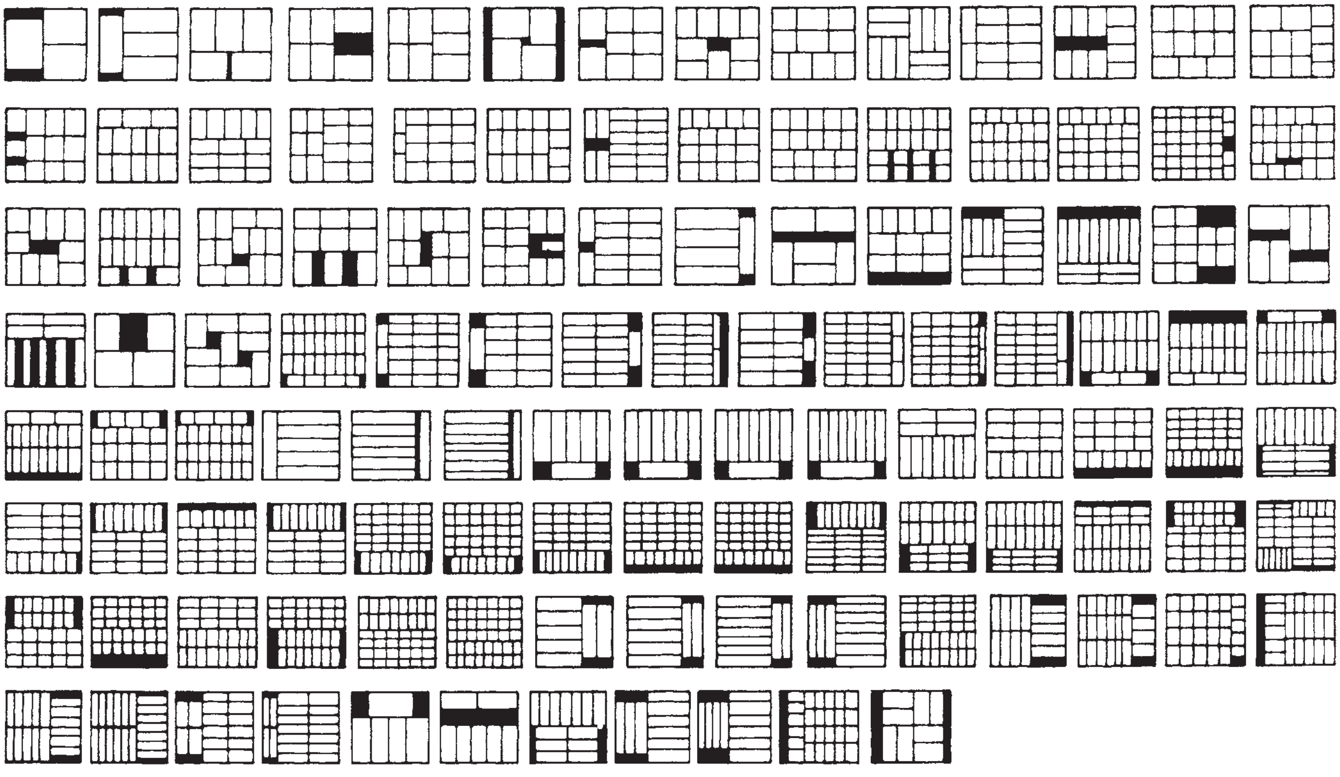

Figure 1. Pallet patterns.

High-Level Palletizers. High-level palletizers (also called moving-pallet palletizers) pick up the product at a level above the height of a full pallet and form the tier pattern on a bed. The pallet is raised to the bed level, and the product is transferred (by a sweep or rake off system) to the pallet. Then, the pallet is lowered one layer, and the next tier is formed in the same manner and placed atop the first. This process continues until the pallet reaches the prescribed height. It is then transferred out to be replaced by an empty pallet that is raised to the bed for a repetition of the process. Numerically controlled tape programs provide simple multipattern capability and are adaptable for a variety of users.

Low-Level Palletizers. Low-level palletizers (also called "fixed-pallet" palletizers) were developed more slowly than high-level palletizers, but with the introduction of programmable logic controllers, they have become highly competitive with high-level units in cost and speed. The low-level palletizer operates at floor level (see Figure 2). The pallet is neither raised nor lowered, and the tier is formed at low level. The transfer bed or apron is raised or lowered to the appropriate level, and the tier is transferred to the pallet. The bed returns to the tier-forming position, and the next layer is formed. This pattern is repeated until the pallet is full. After the full pallet is discharged, an empty one is transferred into the load station, and the process is repeated.

Robotic Palletizers. In the past, "pick-and place" systems picked up a product at one point and placed it at a second point repeatedly. At present, robotic palletizers may be thought of as intelligent, discriminating systems capable of picking up several different products and placing them at several different points. These units are usually capable of movement in two or three planes, often on rotational coordinates that operate from a fixed point at the center of a circle. They are capable of picking up a variety of products from one point on the circumference of the circle and placing it on one of several pallets located at other points around the circumference. Robotic palletizers are most applicable when a variety of products require different pallet patterns and relatively slow speeds are acceptable.

Bulk Palletizers. The shift to bulk handling has reduced the demand for case depalletization of empty containers. Numerous applications exist for palletizing without benefit of a case, for example, the transfer of empty cans from the can manufacturer to the filler. Cans are bulk palletized successfully because they are strong enough to withstand relatively rough treatment. Improved handling methods permit bulk palletization of glass containers, and many plastic containers now are being bulk palletized as they gain a greater place in the market.

Nested container-to-container bulk pallets can save up to 15% space for the same number of containers compared with column-stacked cases. That means 15% more containers can be shipped in the same truckload to the user, which cuts time and expense. The compact loads also reduce warehouse requirements. In addition, bulk palletizing eliminates the labor and expense associated with uncasing equipment and additional conveyors for empty cases.

Bulk palletization is essentially an adaptation of high- or low-level palletization. The product is accumulated on a table or bed, then transferred by lifting a tier or clamping the perimeter and sweeping the tier onto a pallet. A corrugated sheet the size of the pallet, called a tier sheet, is generally used between layers to provide stability to the load. Increased stability can be gained by use of an inverted tray instead of a tier sheet.

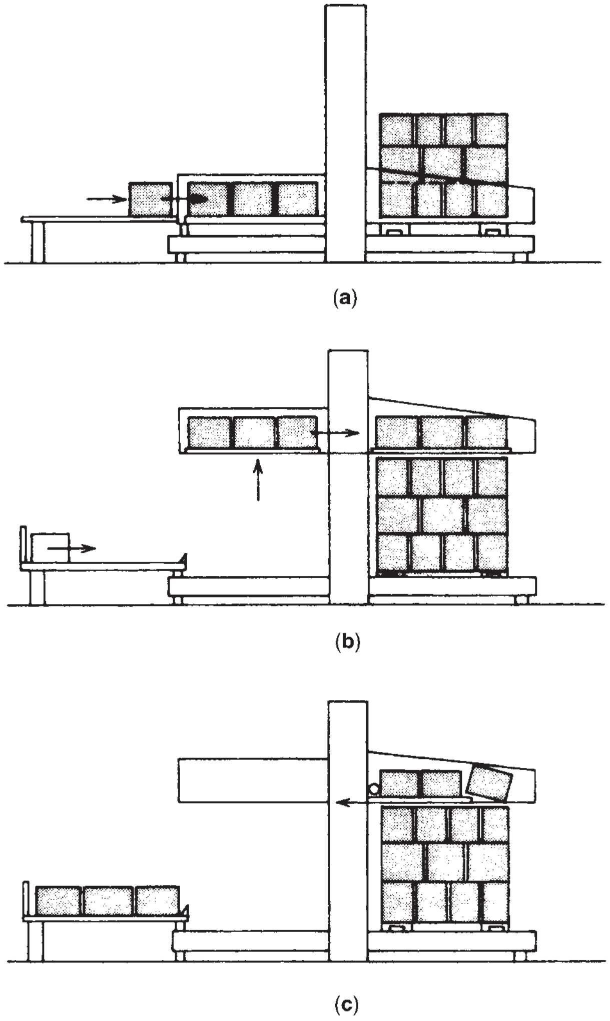

Figure 2. Operation of a low-level palletizer. (**a**) Operation 1. Sealed shipping cases feed in and are oriented to the preprogrammed pattern. When one row is formed, the cases move forward. The next row forms and moves forward, which continues until the layer is complete and the loading plate is filled. (**b**) Operation 2. The layer is lifted to the height of the existing pallet stack. The filled loading plate moves into position just above the pallet stack. (**c**) Operation 3. The loading plate retracts allowing the cases to settle, row by row onto the top of the pallet stack. The pallet is squared by a squaring bar, which also assures complete unloading. The loading plate returns to starting position where another accumulated load is ready.

Miscellaneous Palletizers. Other types of palletizers include drum palletizers, keg palletizers, and bag palletizers. In most cases, these machines address a particular end-use and are concerned only with a narrow portion of the market place.

DEPALLETIZING

The removal of product from pallet depends on the conformation of the product. Bulk depalletizers remove tiers of product from the pallet in much the same manner as bulk palletizers in reverse. In one approach, the tops of the containers are gripped mechanically, pneumatically, or with a vacuum, and the tier is lifted onto a discharge table. In another, the tier is swept onto the discharge table. Removal of the tier sheet or inverted tray is as critical here as in bulk palletization. Product stability is a key factor in all bulk handling operations and the primary determinant of method.

Depalletization of plastic cases or crates may require modified bulk depalletizers or specialized robotic depalletizers. Plastic crates usually have an interlocking feature that requires a tier to be lifted clear of the one below before transfer to the discharge table, thus precluding a sweep system. Most pail depalletizers must handle the products individually in addition to lifting clear of the pail below.

Depalletization of corrugated cases is more difficult than palletization. The flaps on the cases get caught on one another, which prevents consistent sweepoff. Corrugated cases do not interlock, so clamping the perimeter causes the center cases in the tier to slip down. The most reliable way to remove a whole tier of corrugated cases is to use tier sheets, but the additional cost discourages wide acceptance. The next-best method is a combination clamping and vacuum system. Some automated warehousing systems remove cases from pallets one at a time in a type of “order-picking” operation. Little effort is being expended today on finding better case-depalletization methods because the shift to bulk handling has shifted research and development work in that direction as well.

BIBLIOGRAPHY

“Palletizing” in S. D. Alley, ed., *The Wiley Encyclopedia of Packaging*, 1st edition, ABC-KCM Technical Industries, Inc. pp. 486–488.

PALLETS, PLASTIC

L. T. Luft
Menasha Corporation
Neenah, Wisconsin

Plastic pallet construction began during the late 1960s when the low cost of commodity resins such as polystyrene (PS) and polyethylene encouraged scores of molders to enter this promising market. In the early 1970s, high-density polyethylene (HDPE) was priced at about $0.16/lb ($0.35/kg). Still in its infancy, the plastic pallet market was severely curtailed when prices of commodity resins more than doubled at the time of the 1973 oil embargo. A 2:1 price differential between wood and plastic pallets quickly became a 4:1 price disadvantage.

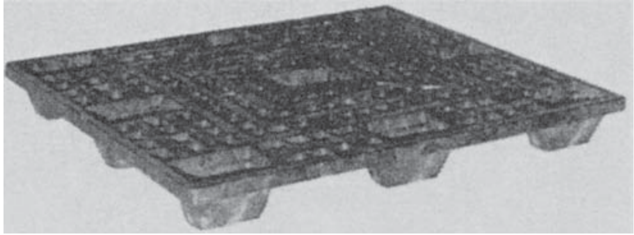

Figure 1. Typical single-faced plastic pallet.

Several changes that took place in the 1980s have encouraged and use of plastic pallets as follows:

Packaging is now often considered part of direct production cost instead of fixed overhead. This highlights the savings generated by reusable pallets (1).

Adoption of the just-in-time inventory concept (2) including reusable packaging, inventory reduction, and higher quality.

Greater use of robots and automated palletizers that require uniform size/weight pallets.

Increased awareness and regulation of plant sanitation.

Typical single- and double-faced pallets are shown in Figures 1 and 2.

Materials. Most plastic pallets are manufactured from HDPE (see the Polyethylene, high-density article). Materials such as polystyrene, fiberglass-reinforced plastics (FRP), and polypropylene are used occasionally. Heavy pallet loads and unsupported pallet racking may dictate the use of stiffer polystyrene (see the Polystyrene article).

FRP (see the Thermosets article) are used for low-volume custom pallet requirements or prototype pallets. In this situation, low-cost wooden tooling is used with the hand-layup fiberglass technique. Polypropylene (see the Polypropylene article) has been used to construct structural foam plastic pallets by companies with excess virgin or regrind polypropylene. Polypropylene is not normally used in pallet construction because it requires relatively expensive impact modifiers for cold-weather performance.

Polyethylene is favored for a many reasons, such as commodity status (i.e., low cost, uniform performance, readily available, and wide acceptance); excellent resistance to impact; good performance under a wide range of operating conditions (i.e., temperatures of –30 to 150°F (−34 to 66°C), indoor or outdoor applications; light- to heavy-weight loading; outstanding chemical resistance to most acids and bases; U.S. Department of Agriculture (USDA) and U.S. Food and Drug Administration

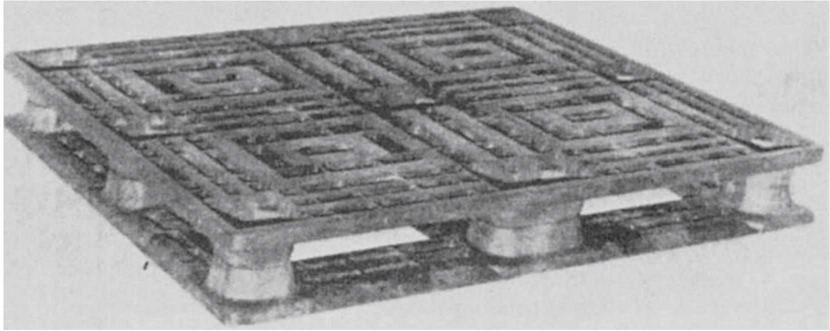

Figure 2. Typical double-faced plastic pallet.

(FDA) clearance for use in food and pharmaceutical plants; easy cleaning; and outstanding molding and design flexibility.

Polyethylene's one glaring weakness is its inability to resist deflection (bending) under load. This deflection problem is especially serious in pallet-racking applications. Unsupported racks do not have center supports or decking. In these racks, the pallet must span an open space while maintaining the load. With loads of over 2000 lb (907 kg), plastic pallets are prone to bending (deflection). In addition to the initial deflection, the plastic pallet will continue to bend or creep for up to 2 weeks. Over time, it may become difficult to reenter the pallet with the forks of a lift. Most standard pallet rack, drive-through rack, and gravity-flow rack are "unsupported."

In situations where heavyweight racking is a must, steel-reinforced plastic or stiffer PS are frequently used. Steel reinforcements add expense, and compared to HDPE, PS costs more and offers less chemical and impact resistance. One solution to the racking problem is in the design of rackable pallets. Two-way-entry pallets can rack over 3000 lb (1360 kg) in an unsupported rack (see Figure 3). Experimental plastic resins are also being tried in an attempt to solve the racking dilemma.

Design and Construction. Pallet design and the method of construction greatly influence pallet performance, price, and acceptance. Today plastic pallets are designed and built using several different processing techniques (see Table 1).

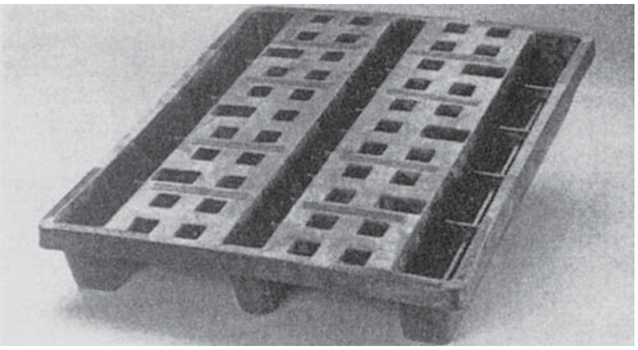

Figure 3. Two-way entry racking pallet.

Structural Foam Molding. Most plastic pallets made today are made by structural foam molding (3, 4). This low pressure injection molding process produces parts with a solid skin surrounding a foamed core. Compared to high-pressure injection molding, structural foam molding allows the economic production of heavy wall sections and helps reduce stress points throughout the pallet. The structural foam process provides outstanding design flexibility. Wall thickness of $\frac{3}{16}$–$\frac{3}{4}$ in. can be molded to produce pallets ranging from lightweight single-faced units to super-duty racking pallets. Another benefit is high-speed production, with cycle times as low as 2–3 min. Good resistance to impact, high strength per pound (kilogram), and good deflection strength are all positive characteristics that make structural foam a good choice for large-scale production of both custom and proprietary pallets. The chief limitation of structural foam is that relatively high volume (3000 total units minimum) is required to amortize the relatively high tooling cost. When compared with high-pressure injection molding, the tooling for structural foam may be less costly. Most low-pressure foam tools may be built from machined aluminum or Kirksite, which reduces tooling costs by up to 50%. When structural foam tools are built from steel, the cost savings are negligible.

Injection Molding. High-pressure injection molding (see the Injection molding article) also offers design flexibility. It is used for the production of pallets that range from light weight disposables to heavy-duty 60-lb (27-kg) reusables. Injection molded parts generally have narrower wall sections than structural foam, ≤ 0.300 in. (≤ 7.62 mm), and rely on their rib design for structural integrity (5). Injection molding excels in light weight, large-volume production. Cycle times for $\frac{1}{8}$ -in. (3.2 mm) injection-molded pallets can be under one minute. Heavy-duty parts with wall section $\frac{1}{8}$in (3.2 mm) offer high strength and excellent durability. Because high molding pressures require expensive equipment and hardened-steel tooling, high-volume production runs $\geq 10{,}000$) are generally required to amortize tooling and press costs.

Table 1. Plastic Pallets, Production Methods

Molding Process	Plastic Pellets Advantages	Plastic Pallets Disadvantages	Ideal Pallet Application	Secondary Applications	Tooling Options	Average Cycle	Wall Thickness
Structural-foam molding	Economic production of heavy-wall sections Short cycle times Good impact resistance Good deflection strength High strength per pound (kilogram) Good weight and dimensional tolerance allows complex shapes	High-cost tooling and processing equipment	Large-volume custom or proprietary pallets with runs of 1000 pallets or more Minimum custom order quantity 3000 units	Manufacture of heavy-duty racking pallets is possible by using filled polyethylene pallets or polystyrene Wall thicknesses of up to 1 in. (2.54 cm) can be used when necessary	Kirksite aluminum steel	2–4 min	$\frac{3}{16}$–1.0 in (4.8–25.4 mm)
Injection molding	Flexible process allows production of light-weight disposable as well as heavy-duty returnable pallets; allows complex geometry	Highest tooling cost Highest equipment costs High energy costs	Largest-volume custom and proprietary pallets	Lightweight disposable pallets can be inexpensively produced by keeping wall sections narrow and cycle times short; heavy-duty racking pallets can be manufactured by using heavier wall sections and a well integrated rib design	Hardened steel	30 s–3 min	$\frac{1}{32}$–$\frac{3}{8}$ in. (0.8–9.5 mm)
Rotational molding	Low equipment cost Low tooling cost Production of double walled parts	Relatively long cycle times Limited weight and dimensional stability Limited to simpler design (geometry)	Low-volume production of large pallets Custom pallet projects of 1000 units or more are feasible	Manufacture of heavy-duty racking pallet is possible by ecapsulating steel reinforcements into the pallets	Cast- aluminum fabricated metal-plated nickel	3–6 min	$\frac{1}{8}$–$\frac{1}{4}$ in. (3.2–6.4 mm)

(*Continued*)

Table 1. Continued

Molding Process	Plastic Pellets Advantages	Plastic Pallets Disadvantages	Ideal Pallet Application	Secondary Applications	Tooling Options	Average Cycle	Wall Thickness
Vacuum forming	Low equipment cost Low tooling cost	Relatively long cycle times Limited wall thickness Limited depth of draw Limited design complexity	Lower-volume, low cost, lightweight pallets Pallets projects of 500 units and above are feasible	Heavier loads up to 3000 lb (1361 kg) can be accomodated by using twin-sheet vacuum forming Vacuum-formed pallets are not generally used for heavy-duty racking applications	Metal Plaster Epoxy Wood	3–6 min	$\frac{1}{8}$–$\frac{1}{4}$ in. (3.2–6.4 mm)
Reaction-injection molding	Lighter weight tooling and equipment costs less than injection molding processes	Limited deflection strength	Lighter duty custom and proprietary pallets	Fiberglass-reinforced reaction injection molding is used to increase deflection strength for heavier applications	Lightweight steel Aluminum Kirksite Sprayed metal	2–4 min	$\frac{1}{8}$–2.0 in. (3.2–51 mm)
	Allows complex designs Lower pressures and temperatures afford significant savings (70%) over injection-molding processes	Slightly longer cycle times than injection-molding processes Limited dimensional stability	Pallet projects of 1000 units and above should be justifiable	Steel reinforcements can be encapsulated for additional strength			

Rotational Molding. Rotational molding (3) (see the Rotational molding article) uses a heated tool into which solid or liquid polymer is placed. This process offers the most economical tooling costs. Myriad sizes and designs of a relatively low quantity (1000–2000 units) can be economically justified. Design innovation, including the molding of steel-encapsulated, smooth-skinned pallets is a feature of rotational molding. Rotationally molded parts offer good resistance to blunt impact and the repair of small puncture damage is possible. Its drawbacks include relatively long cycle times (as high as five min) and relatively narrow $\frac{3}{16}$-in. (4.8-mm) wall thickness (6), which limits rotationally molded pallets to medium-duty applications. Some rotationally molded designs can accommodate the addition of steel reinforcement for heavier loads and pallet racking operations.

Thermoforming. Thermoformed plastic pallets (see the Thermoforming article) are offered in dozens of low-cost lightweight designs. Inexpensive tooling allows faster amortization of low-volume custom pallets. For example, custom reusable dunnage trays are often thermoformed. Thermoforming, too, has its disadvantages. With cycle times averaging 5-min (5), high-volume projects are sometimes impractical. In addition, relatively narrow wall thicknesses limit these pallets to lighter loads, usually under 3000 lb (1360 kg). They are not often found in heavy-duty racking applications. Twinsheet vacuum forming allows heavier loads with reduced deflection, but it lengthens cycle times and adds cost.

Reaction Injection Molding (RIM). RIM polyurethane pallets have entered the market. RIM uses two or more liquid components (polyol and isocyanate) that are mixed, then injected into a closed mold. These two components react to form a finished polymer, which takes on the shape of the tool. The chief advantages of RIM are lower cost equipment and tooling, especially in building large parts such as pallets. The chief disadvantage of RIM pallets is the lower resistance to deflection. For this reason, many large RIM parts are steel reinforced or manufactured with fiberglass or mineral fillers. These stiffening techniques add cost.

Advantages. Plastic pallets are used primarily in the food, pharmaceutical, textile, high-technology, and automotive industries. Because of the higher cost of plastic pallets, most purchasers use their pallets in-plant, or in closed-loop shipping system. Plastic pallets are almost always found in applications where the user can retrieve most of the pallets after each trip.

Plastic pallets of all types offer certain generic advantages which make them attractive alternatives to other pallet materials. Listed below are some of the plastic pallet's chief benefits.

Long Pallet Life. The relatively expensive plastic pallet must offer a long service life. Many customers experience plastic pallet life of 5–9 years and more (7).

Reduced Load Damage. Smooth molded plastic helps eliminate product damage. There are no broken boards or protruding nails to damage-sensitive loads (7).

Easy Cleanup. Plastic pallets are easy to clean and keep clean (8).

USDA and FDA Clearance. Both polyethylene and polystyrene are acceptable in food and pharmaceutical plants. Pallets made from these materials can be approved on a case by case basis by the on-site inspectors.

Reduced Worker Injury. Smooth construction and consistent weights help to eliminate minor cuts and back strain (7).

Chemically Inert. Polyethylene plastic pallets are highly resistant to acids and bases, and at ambient temperatures, hydrocarbon solvents.

Moistureproof. Plastic pallets will not absorb moisture and soak loads. Plastic pallets will not rust or break down in wet conditions (8).

No Harbor for Pests. Plastic pallets will not harbor or support the growth of worms, eggs, molds, or mildew.

The design advantages of plastic pallets can include the following:

Nestability (single-faced pallets can nest with each other when unloaded). This feature can save over 50% of valuable truck or dock space.

Interstacking (the ability to positively locate one loaded pallet on top of another loaded pallet).

BIBLIOGRAPHY

"Pallets, Plastic" in L. T. Luft, *The Wiley Encyclopedia of Packaging Technology*, 1st ed., Neenah, WI: Menasha Corporation, pp. 488–492.

1. *U.S. Industrial Outlook*, United States Department of Commerce, Jan. 1984.
2. J. M. Callahan, "Just-in-Time a Winner," *Automotive Ind. Mag.* **65**(3), 78 (March 1985).
3. *Modern Plastics Encyclopedia*, 1983–1984 ed., McGraw-Hill Publications, New York.
4. "What's Available in Plastics?", *Warehouse Supervisor's Bulletin*, National Foreman's Institute, Waterford, CT, June 25, 1984.
5. "Pallets Take off in All Directions," *Modern Plast. Mag.*, 64–66 (March 1971).
6. "Fitting Plastic Pallets to the Job," *Plast. Design Forum* **9**(3), 57 (May/June 1984).

7. R. F. Ellis, “Plastic Pallets Eliminate Product Damage in Storage,” *Modern Mater. Handling Mag.* **39**(8), 87 (June 8, 1984).

8. “Molded Plastic Pallets Solve Odor Transfer Problem,” *Food Processing Magazine*, **46**(3), 108 (March 1985).

PAPER

Updated by Staff

INTRODUCTION

There is no strict distinction between paper and paperboard, particularly in view of the tremendous variation in density possible with current technology. Generally, structures less than 0.012 in. thick (12 “points” or 305 μm) are considered paper regardless of weight per unit area. Except for the use of paper as an overwrap for folding cartons, most packaging papers are used in flexible applications.

A large number of grades of paper and board are available for packaging and are employed for many different purposes. Packaging paper grades range from simple wrapping paper (made from mixed recovered paper) to kraft paper and are predominately supplied in rolls. They are made from virign pulps (sulfite/kraft pulp), from recycled fibers, or from mixtures of chemical pulp and recycled fibers. These grades are used in the production of bags, beer mats, carrier bags, and gift wrapping paper for example.

For the foodstuff sector, special types of paper and board are produced which must fulfill the requirements of the food laws. These papers are used in the nonfood sector—for example, as coating papers. The possibilities of combination with each other and with other materials, such as plastics, are numerous. In this way, special packing materials can be produced for most packaging purposes (1).

The primary intermediate product used to make paper is wood pulp. The properties of an individual paper or paperboard are extremely dependent on the properties of the pulps used. Pulp preparation from deciduous (hardwood) or conifer (softwood) species may be done by mechanical, chemical, or hybrid processes (2, 3). These hardwood or softwood pulps may be used unbleached, or they can be bleached to varying degrees by a diversity of techniques.

Mechanical pulps produce papers that are characterized by relatively high bulk, low strength, and moderate to low cost (4). Their use in packaging is very limited.

The kraft (sulfate) pulping process, introduced about 100 years ago, dominates the chemical pulping industry: Yields are higher, pulps are stronger, and process chemicals more completely and economically recovered than with any other process. Although the sulfite processes were extremely prominent 75–125 years ago, their chemicals are difficult to recover, the resultant pulps are significantly weaker than those produced by the kraft process, and they produce no unique paper properties. Unbleached pulps are generally stronger, stiffer, and more coarse than their bleached counterparts, but papers made of white, comfortable fibers are used in many more applications. General treatments of pulping and bleaching are provided in references (5–8).

The standard ream basis for packaging papers in the United States is 500 sheets cut to a size of 24×36 in. (61×91.5 cm) (3000 ft^2 or 279 m^2). On this basis, packaging papers normally weigh 18–90 lb/ream (8.2–40.8 kg/ream), but some specialty applications require weights as low as 10 lb (4.5 kg) or as high as 200 lb (90.7 kg)/ream. At any given basis weight, density may typically be 0.08–0.16 lb/in.^{3} (2.2–4.4 g/cm^3), providing a very wide range of thickness and strength properties.

The two most general classifications of packaging papers are coarse and fine. Coarse (kraft) packaging papers are almost always made of unbleached kraft softwood pulps. Fine papers, generally made of bleached pulp, are typically used in applications demanding printing, writing, and special functional properties such as barriers to liquid and/or gaseous penetrates.

KRAFT PAPERS

In order to meet the high strength requirements, kraft papers consist of primary or a mixture of primary and secondary fibers of kraft pulp. They are used mainly for packaging purposes.

Kraft papers, produced by the kraft process, derive their name from the German word for “strong.” Kraft paper is made from at least 80% sulfate wood pulp. It is typically a coarse paper with exceptional strength. Sometimes made with a rough finish to keep bags from sliding off piles, these papers are often made on a fourdrinier machine and then either machine-finished with a calendar stack or machine-glazed by using a Yankee dryer (5, 6). The surface of these papers is acceptable for printing by letterpress, flexography, and offset processes (see Printing). In addition to wrapping applications, kraft papers are used for multiwall bags and shipping sacks (see Bags, multiwall), grocers’ sacks, envelopes, gummed sealing tape (see Tape, gummed), butcher wraps, freezer wraps, tire wraps, and specialty bags and wrappings that require economy and strength. Paper for grocery bags and fast food bags must have a high resistance to tearing. The fiber of choice is softwood kraft, which may be bleached or unbleached (9). Many papers formerly manufactured from sulfite pulps, especially those of tissue weight, are now manufactured with kraft pulps. Unbleached “sulfite” papers are used for products such as oil cans (intermediate liner) and single-service food packages.

Extensible kraft papers have satisfied a special niche in the packaging industry. Although creped papers have long served both decorative and functional roles, other papers capable of absorbing energy at sudden rates of strain have become increasingly important in uses such as shipping sacks. Conventional creping is performed either at the wet press section of a paper machine (wet crepe) or on a Yankee dryer (dry crepe). Dry creping is most commonly used to generate qualities such as softness and absorbency; wet creping is a technique for making tough, flexible papers capable of absorbing tensile energy. A secondary creping operation rewets a dry sheet, and it may be done in-line on the paper machine or as an independent manufacturing process. Whereas a standard kraft paper might have a stretch (before breaking) of 3–6%, creped papers generally may be stretched 35–200% of their original length before breaking. Manufacturers of creped, extensible, and other coarse (kraft) papers may be found in reference (10).

BLEACHED PAPER

Packaging applications that place a higher priority on printing, writing, and special functional properties than on economy and strength generally utilize bleached papers. The pulps used to manufacture bleached papers are relatively white, bright, and soft, and they are also receptive to special chemicals necessary to develop many functional properties. Although generically not as strong as unbleached kraft papers, bleached papers can be manufactured to meet simultaneous requirements of both strength and printability. Their whiteness enhances print quality and generates a perception of cleanliness and quality. The aesthetic appeal of bleached packaging papers may be augmented by clay coating one side (C1S) or both sides (C2S). The increasing demand for a combination of functional performance and top-quality graphics favors the C1S manufacturer who can satisfy the variety of challenges of this market.

VEGETABLE PARCHMENT

Vegetable parchment is a highly waterproof, greaseproof, boilproof paper of high purity. It is used in the packaging of fats in combination with aluminum foil or a plastic coating. Silicon-coated parchment paper has a wide range of applications—for example, in antiadhesive papers (1).

The process for producing parchment paper was developed in the 1850s, making it one of the grandfathers of special packaging papers. By soaking an absorbent paper in concentrated sulfuric acid, the cellulosic fibers are swollen tremendously and partially dissolved. In this state the plasticized fibers close their pores, fill in voids in the fiber network, and thus produce intimate contact for extensive hydrogen bonding. Rinsing with water causes reprecipitation and network consolidation, resulting in a paper that is stronger wet than dry, lint-free, odor-free, taste-free, and resistant to grease and oils. By combining parchment's natural tensile toughness with extensibility imparted by wet creping, paper with great shock-absorbing capability can be produced. Special finishing processes provide qualities ranging from rough to smooth, brittle to soft, and sticky to releasable. Parchment was first used for wrapping fatty substances like butter; but this versatile paper is now also used whenever food is prepared, frozen, packaged, or displayed, as well as when tough, lint-free, chemically pure surfaces are needed for special packages.

GREASEPROOF AND GLASSINE

Because cellulose is hydrophilic, it is a good substrate to use for resisting penetration of hydrophobic liquids. As noted above, vegetable parchment performs well as a greaseproof paper because it is essentially pore-free and composed of a hydrophilic material. "Greaseproof" paper is a substrate manufactured to also have an essentially pore-free consolidation; but mechanical refining ("buffing" or cutting) is used in its production instead of swelling with concentrated sulfuric acid. Refining fibrillates, breaks, and swells the cellulose fibers to permit consolidation of a web with many interstitial spaces filled in. Glassine paper is produced by further treating "greaseproof" paper with a supercalendar operation. The supercalendar step involves moist high temperatures (steam), pressure (several hundred pounds per lineal inch or ~100 kg/cm), and differential hardness (one roll typically cotton or soft rubber, the other roll hard rubber or metal) to polish the surface. Supercalendering a greaseproof paper generates such intimate interfiber hydrogen bonding that the refractive index of the glassine paper approaches the 1.02 value of amorphous cellulose. This indicates that very few pores or other fiber–air interfaces exist for scattering light or allowing liquid penetration. High transparency is achieved by intensive supercalendering. The paper is frequently colored. This paper is used, for example, for wrapping chocolates or for packing high-quality preserves.

Greaseproof and glassine papers are frequently plasticized to further increase their toughness. They have a reputation of running well on high-speed packaging lines, and they have served well for odor and aroma barriers. Like other flexible-packaging papers, they can be chemically modified to enhance functional properties (e.g., wet strength, adhesion, release). When waxed, they are standard materials for primary food pouches used to package dry cereals, potato chips, dehydrated soups, cake and frosting mixes, bakery goods, candy and ice cream confections, coffee, sugar, pet food, and so on. In addition to their protective functions, these papers heat-seal easily when waxed and reclose well. Greaseproof paper is neither waterproof nor boilproof.

WATER-, GREASE-, AND OIL-RESISTANT PAPERS

The distinction between greaseproof papers and grease-resistant papers is a fairly subtle one, involving an understanding of the methods of penetration of liquids into surfaces. Because the primary mechanisms involve capillary penetration and/or wetting, it is appropriate to consider the severity of the packaging requirement. The requirement may be for minimal staining by grease, oil, or water under negligible pressure; or it may be for absolute resistance to any penetration of the liquid over long periods of time and/or under substantial pressure; or it may lie between these extremes. Parchment, glassine, and greaseproof papers offer decreasing protection from grease and oil at the more restrictive end of the spectrum. As noted above, their resistance is generated by the lack of capillaries and the oleophobic nature of cellulose. Greaseproof paper can be made resistant to grease primarily by a beating process and by the addition of auxiliary agents (1).

A consideration in designing primary packages is the economics of using the various barriers available for the job. A bag for a single-service consumable (e.g., French-fried potatoes) may require resistance to staining for only several minutes. A lubricating oil package, on the other hand, may require a stain-free barrier for several months. Imparting sufficient resistance to liquid penetration to meet the requirements of the less demanding applications can be done very economically with chemical treatments. If grease and/or oil penetration is the only concern, moderate resistance (package life of minutes to days) can be developed using waxes (see Waxes) and other low-surface-energy materials such as fluorocarbons. Fluorocarbon technology in papermaking has expanded from multiwall and consumer bags to labels, coupons, and carryout food packaging, perishable bakery goods packaging, candy and confection packages, and form-and-fill packages where edge wicking may be an important consideration.

In many applications (e.g., carryout food packaging), resistance to both water and oils must be developed for adequate performance. The use of rosin-based chemicals for developing water repellency in paper requires the use of alum ($Al_2(SO_4)_3$) or other multivalent cations that destroy the grease-resisting properties of fluorocarbons. The simultaneous development of both water and oil resistance requires (a) the use of oleophobic chemicals that react with hydroxyl and carboxyl groups on the cellulose fibers and (b) the use of hydrophobic chemicals such as fluorocarbons, which have also been modified to react with the same cellulose functional groups. Typical oleopholic chemicals currently in widespread use are alkylsuccinic anhydrides and alkylketene dimers. The most successful economic choices are made through close consultation between the paper manufacturer and the user, which allows the careful selection of designs for meeting specific performance requirements. Grease- and oil-resistant papers can be made to run well in most any converting and printing processes.

WAXED PAPERS

Waxed papers are age-old papers that have served the packaging industry well in applications requiring direct contact with food for barrier against penetration of liquids and vapors, as well as heat sealability, lamination, and even printing. Waxing can be performed in-line with the paper-manufacturing process, in-line with printing, converting or lamination processes, or as a discrete process. A great many base papers are suitable for waxing processes, including (a) greaseproof and glassine papers and (b) water-resistant papers. Supercalendered base paper is designed for waxing and frequently contains titanium dioxidea as filler. This type of paper is used for wrapping candy. There are two fundamentally different waxing processes, generating different characteristics for the finished sheet (see Waxes). Wet waxing is an operation in which the wax coating is applied to the surface of the sheet. Surface wax is desirable for heat sealing and lamination and is essential for vapor-barrier development. Dry waxing is performed to absorb wax into the sheet, leaving a surface that often does not look or feel waxy. Penetration of wax allows additional surface treatments for special release applications, or for further lamination. Absence of the continuous film of wax on the surface characteristic of wet waxed paper also allows the dry waxed paper to “breathe” moisture, carbon dioxide, and oxygen.

Waxed papers provide an economical choice for primary food packaging not only because of their versatility but also because of their safety as tasteless, odorless, nontoxic, and relatively inert materials. Their widespread use in conventional packaging applications includes: delicatessen pickup sheets; box liners; cover, scale, and utility sheets; patty papers; sandwich wraps; and bags, laminations to other papers and paperboard for food trays, locker papers, carryout cartons, food pails, baking cups, folding cartons, cereal liners, and folding carton overwrap.

SPECIALTY-TREATED PAPERS

Many packaging applications require barrier to substances other than water, grease, or oil. Most food-packaging applications are well-served with water- and/or oil-penetration resistance, but a number of products require more elaborate barriers. Meat-wrapping paper demands exceptional strength; resistance to grease, moisture, and blood; easy release with no residual taste or odor; plus “bloom” retention. Freezer paper must remain pliable at low temperatures and must offer puncture resistance, moisture-vapor barrier, exceptional seal integrity, and easy release from frozen or thawed meats. Other products such as chemicals, drugs, cosmetics, personal-care items, and industrial products require package functions such as acid resistance, alkali resistance, alkali solubility, mold resistance, flame retardation, solvent resistance, organic polymer adsorption/absorption resistance or affinity, adhesion, release, tarnish or rust inhibition, heat stability, sterilizability, specific-ion adsorption, conductivity, resistivity, stiffness, or flexibility. Photographic protective wrapping paper is a black-dyed chemically neurtral paper that can be folded without breaking and is suitable for wrapping photographic film. To address the general manufacturing techniques or even the functional property classification of such a variety is beyond the scope of this publication. Reference (11) provides a general treatment of some of these products that have transcended proprietary technology.

WET-STRENGTH PAPERS

Conventional papers are not strong when wet. The most predominant fraction of paper's strength is the result of hydrogen bonding between hydroxyl and carboxyl groups of adjacent fibers. The removal of water during the papermaking process generates these bonds, and the process is reversible. The two strategies for manufacturing strong-when-wet papers are (a) keep the water out of the paper and (b) introduce additional chemical bonds between fibers which are not influenced by the introduction of water.

As mentioned above, paper that has been parchmentized is actually stronger wet than dry, principally because of the loss of individual fiber identity during the gelatinized stage of the process. Through advances in chemical technology, several more economical alternatives exist for generating wet-strength papers. In general, the chemicals used to augment the natural hydrogen bonding are crosslinked during the manufacturing process. Common chemicals for producing wet-strength papers include protein, urea, melamine, resorcinol, and other phenolic or amino resins crosslinked with formaldehyde, and condensation products of polyalkylene polyamines with dicarboxylic acids crosslinked with epichlorohydrin (12).

The conventional tests of wet-strength papers are for tensile, tear, and burst strength, because these are the most useful indicators of use requirements. The degree of wet strength is expressed as a percentage of original dry strength, and is referred to as the percent of strength retention. The typical range for sack or pouch papers is 15–30%. Wet strength may also be generated in a variety of permanence levels, so that the product will either remain tough-when-wet, or eventually disintegrate with soaking time or application of force.

ABSORBENT PAPERS

Papers designed for absorption of specific fluids are an important part of the packaging industry. Although they are a member of the class of "specialty-treated papers," they are distinctive enough to warrant separate discussion. Typically at the low end of the strength spectrum, absorbent papers must not only be exceptionally porous, they must also have surface modifications to render affinity to the target liquid. When that liquid is aqueous, they must generally also have a definitive level of wet strength. Providing the special affinity to a given liquid is often a proprietary technology involving chemicals that are substantive to cellulose and to the target liquid. This special class of papers currently services industries ranging from fresh-food packaging to industrial-products packaging.

TISSUE PAPERS

Tissues form a special group of fine packaging papers because of their versatile performance. Tissue is made of either virgin or recycled fiber. Always fairly thin, tissues range from semitransparent to totally opaque. They can be waxed or treated with any of the specialty treatments (e.g., edible oils, for fruit wrapping, antitarnish metal protection), or they can be used "as is" for applications ranging from intermediate lamination steps in composite-container construction (see Cans, composite) to gift wrapping. They may be made exceptionally weak for softness, or surprisingly tough in all directions. Tissue papers are generally either machine-finished (MF) or machine-glazed (MG). Machine finishing involves calendering between rolls that are usually constructed of highly polished steel that are hydraulically loaded to squeeze and polish both sides of the paper to similar levels of smoothness. Machine glazing of papers produces a smooth glazed side and a rough back side. The special finish is the result of drying the paper with 60–70% moisture on a Yankee dryer [diameter 6–18 ft (1.8–5.5 m)] with a mirrorlike surface. This glazing process produces a very smooth surface for printing, adhesion, release, or wet waxing. A physical fusion takes place with the surface fibers, producing a physical barrier similar to a cast film. MG papers may also be machine-finished to improve the smoothness on both sides or to produce intermediate rolls which process better through subsequent converting steps. A great many applications for tissue paper today utilize special treatments for adhesion or release in an intermediate package-manufacturing process where the paper's light weight and thinness make it an economical carrier for more costly substances (see Multilayer-flexible packaging).

COATED PAPERS

Coated papers is a term generally reserved for papers acting as a base for aqueous mixtures of clay and/or other mineral pigments with natural and/or synthetic polymers as pigment binders. The term does not typically refer to papers that have been extrusion- or solvent-coated with organics or plastics, or surface-treated with specialty treatments listed above for functional improvements. Aqueous coatings of paper are performed primarily for market appeal where graphics are important. Coated papers are consumed not only for labels and multiwall bags, but also for lamination or combination with other functional materials in composite structures. Coated papers are often coated on one side. Coated papers can be designed for printing by any process from letterpress to ink jet (see Code marking and imprinting). They can also be painted, bronzed, and punched. They are waterpoof and alkali-resistant to prevent the detachment of labels in washing machines. They are used, for example, as wrapping paper for chocolates, cigarettes, and soap. Coated packaging papers are bleached kraft papers having a one-sided matt or glossy coat and are suited for the production of bags and carrier bags. Packaging laminates based on cardboard and paper have been reported (13, 14). The most-valued grades are typically produced in discrete manufacturing processes that vary widely (5, 6, 8). Detail of coating technology state of the art are contained in annual *TAPPI Coating Conference Proceedings* (15).

NONWOVENS

Nonwovens are materials used as cloth substitutes, made entirely or partially from cellulosic fibers. As an industry, nonwovens is dynamic and growing in medical, health-care, industrial, food-processing, and consumer- and household-products areas. Differentiated from classical paper, which is formed in water and consolidated with interfiber hydrogen bonds, nonwoven-manufacturing technologies include resin and thermally bonded carded web process, melt-blown process, and an air-laid process (16) (see Nonwovens).

BIBLIOGRAPHY

M. Sikora, "Paper" in *The Wiley Encyclopedia of Packaging Technology*, 1st edition, James River Corporation, Speciality Packaging Papers Group, pp. 497–500; in 2nd edition, pp. 714–717.

Cited Publications

1. O. Tillma, in H. Holik, ed., *Handbook of Paper and Board,* Wiley-VCH. Weinheim, 2006, Chapter 11.
2. S. A. Rydholm, *Pulping Processes*, Wiley-Interscience, New York, 1965.
3. M. G. Halpern, ed., *Pulp Mill Processes, Developments Since 1977*, Noyes Data Corp., Park Ridge, NJ, 1981.
4. D. R. Allen, ed., *Uncoated Groundwood Papers*, Miller Freeman Publications, San Francisco, CA, 1984.
5. J. P. Casey, ed., *Pulp and Paper Chemistry and Technology*, 3rd edition, Vols. I–IV, Wiley-Interscience, New York, 1980.
6. R. G. MacDonald, ed., *Pulp and Paper Manufacture*, 2nd edition, Vols. I–III, McGraw-Hill, New York, 1969.
7. *Pulp Technology and Treatment for Paper*, Miller Freeman Publications, Inc, San Francisco, CA, 1979.
8. M. J. Kocurek and C. F. B. Stevens, eds., *Pulp and Paper Manufacture*, 3rd edition, Joint Textbook Committee of The Paper Industry, Atlanta, GA, 1984.
9. M. A. Hubble, "Paper," in *Kirk-Othmer Encyclopedia of Chemical Technology,* Vol. 18, 5th edition, Wiley Interscience, Hoboken, NJ, 2006.
10. *Walden's ABC Guide*, www.pulpandpaper.net.
11. R. H. Mosher and D. S. Davis, *Industrial & Specialty Papers*, Vols. 1–4, Chemical Publishing Co., 1970–1974, 1969–1973, Vol. 1 (*Technology*), 1968, Vol. 2 (*Manufacture*), 1968; Vol. 3 (*Applications*), 1969; Vol. 4 (*Product Development*), 1970.
12. G. A. Keim, U.S. Patent No. 2,926,154, (to Hercules Powder Company) February 23, 1960.
13. K. Magnusson, U.S. Patent Application 20050260366, November 24, 2005.
14. P. Frisk, K. Ono, and H. Agita, U.S. Patent No. 7, 201,971, April 10, 2007.
15. A. F. Turbak, *Introduction to Nonwovens*, TAPPI, Atlanta, GA, 1998.
16. *Proceedings of PLACE: Polymers, Laminates, Adhesives, Coatings, and Extrusions Conference*, annual publication of TAPPI Press, Atlanta, GA.

General References

B. Wirtzfeld, ed., *The Paper Yearbook*, Harcourt Brace Jovanovich, New York, comprehensive listing of typical uses.

The Competitive Grade Finder, 18th edition, Grade Finders Inc., Bala-Cynwyd, PA, 1984.

J. Hube, ed., *Kline Guide to the Paper Industry*, 4th edition, C. H. Kline, Fairfield, NJ, 1980.

API annual *Statistics of Paper and Paperboard* for relative shipment and sales volume.

The Dictionary of Paper, 4th edition, American Paper Institute, Inc., New York.

B. Toale, *The Art of Papermaking*, Davis Publications, Worcester, MA, 1986; concise but fairly comprehensive treatment of historical techniques for making contemporary decorative papers.

I. P. Leif, *An International Sourcebook of Paper History,* Archer Dawson, Hamden, CT, 1978.

H. F. Rance, ed., *Handbook of Paper Science*, Elsevier Scientific Publishing; New York, 1982, Vol. 1, *Raw Materials and Processing*, Vol. 2, *Structure and Properties*.

R. P. Singh, ed., *The Bleaching of Pulp*, 3rd edition, TAPPI Press, Atlanta, 1979.

G. R. Hutton, ed., *Phillips Paper Trade Directory-Mills of the World*, Derek G. Muggleton Publishers, Kent, UK, 1985.

PAPER, SYNTHETIC

Tamerica Products
Chino, California
Updated by Staff

INTRODUCTION

Synthetic plastic paper is a calendered plastic sheet that is a unique mixture of clay (calcium carbonate) and polypropylene resin. This formulation makes it feel, look, print, and fabricate like paper, but with the durability and tear resistance of plastic. White opaque with a fine matte finish, it is a single-layered substrate that offers superior ink adhesion and has excellent bonding characteristics. It is easily printable (no pretreatment). Hop-Syn G2 synthetic paper is designed for printing high-quality heavy-gauge polypropylene and designated for packaging applications. Hop Industries, the maker of the Hop-Syn line, has reported an increase in sales of its products from its initial sales in 1997 of $\$22.9 \times 10^6$ to $\$45.2 \times 10^6$ in 2006 (1).

PROPERTIES

Temperature, Abrasion, Moisture, and Tear Resistance

Synthetic paper is dimensionally stable and can withstand temperatures ranging from −60°F to +200°F. Under any of the above conditions, it is resistant to cracking, abrasion, shrinking, or any distortion in color or sheet size. It is scuff-resistant and weather-resistant and has high opacity for two-sided printing.

It is 100% waterproof and will not be affected by moisture or humidity and offers superior tear resistance over paper.

Printability

Hop-Syn brand synthetic paper (trademark of HIC Industries Corporation, formerly Tamerica) is formulated with antistatic agents and offers a porous printing surface good layflat and a very close gauge tolerance suitable for high-speed printing. Its antistatic surface eliminates double-fed sheets when printing, folding, and stacking. Suitable commerical printing methods include flexography, rotary gravure, offset lithography, thermal transfer, rotary letterpress, and screen (1).

Its porous surface allows ink to be absorbed underneath its surface, preventing the printed image from being damaged by scuffing or scratching; this makes it easily washable with a damp cloth when removing stains such as grease, oil, foods, soft drinks, soaps, and/or detergents.

USES

Since synthetic paper is manufactured in a variety of gauge thicknesses from 0.0031 to 0.020 in both sheet and roll form, it has many new uses. Popular applications include displays, boxes, tags, labels, maps, charts, licenses, credit cards, menus, posters, signs, banners, calenders, greeting cards, and shopping bags. However, this is only a small sample of applications.

ENVIRONMENTAL CONSIDERATIONS

Synthetic paper (in this case Hop-Syn) is made from polypropylene resin and clay (calcium carbonate). These are nontoxic materials that contain no chlorine or other halogens, producing neither dioxins, hydrochloric acids, or other highly toxic materials. It recycles as a plastic, does not drip when burned, emits no toxic fumes, and leaves a clean ash when incinerated and can be easily recycled in the manufacturing process.

BIBLIOGRAPHY

Tamerica Products, "Paper, Synthetic," in *The Wiley Encyclopedia of Packaging,* 2nd edition, John Wiley & Sons, New York, 1997, p. 722.

Cited Publications

1. "Quality, Dedication, Integrity," Hop Industries Corp., Lyndhurst, NJ, www.hopindustries.com, accessed July 2008.

PAPERBOARD

B. W. Attwood
St. Annes Paper and
Paperboard Developments Ltd.
Updated by Staff

INTRODUCTION

Paperboard, often called simply "board," is one of the major raw materials used in packaging. The term includes boxboard, chipboard, containerboard, and solid fiber. Its application covers a wide range of uses from simple cartons (see Cartons, folding) to complex containers used for liquids. It can also be converted into drums for bulk packaging of chemicals or combined with other materials to produce containers large and strong enough for the protection of large, heavy, and often fragile items during transport. In addition to product-protection requirements, paperboard must often have at least one smooth surface capable of accepting high-quality print (see Printing). Paperboard is widely used because it meets the following criteria for successful packaging, namely to: contain the product; protect goods from mechanical damage; preserve products from deterioration; inform the consumer; and provide visual impact through graphical and structural design (1).

TERMINOLOGY

"Paper" is the general term for a wide range of matted or felted webs of vegetable fiber (mostly wood) that have been formed on a screen from a water suspension. The general term can be subdivided into paper (see Paper) and paperboard. There is no rigid line of demarcation between paper and board, and board is often defined as a stiff and thick paper. ISO standards state that paper with a basis weight (grammage) generally above $250\,g/m^2$ ($\sim 51\,lb/1000\,ft^2$) shall be known as paperboard, or "board." The definition becomes less clear because in some parts of the world, board is classed as such when its caliper (thickness) exceeds $300\,\mu m$ ($\sim$12 mil) [in the United Kingdom, $250\,\mu m$ ($\sim$10 mil)]. There are exceptions to the above: Blotting papers and drawing papers thicker than $300\,\mu m$ are classified as paper; and corrugating medium, linerboard, and chipboard less than $300\,\mu m$ are classified as paperboard.

It is also not possible to strictly define paperboard by its structure or by the type of machine used to produce it. For example, paperboard can have either a single- or multi-ply structure and can be formed on a fourdrinier-wire part, a single or a series of cylinder molds, or a series of modern formers, or sometimes by means of a combination of one or more of the above (see diagrams and related text). For a small part of the market, paperboard is produced by laminating sheets of paper together. In that case, the product is solid fiber (see Boxes, solid fiber).

The following terms are in general use in paperboard manufacturing and associated converting industries:

Basis Weight. This is the weight of a known area—for example, g/m^2 (grammage) or (lb/1000 ft^2), the weight in pounds of a ream (usually 500 sheets) of paperboard cut to its "basic size."

Caliper (Thickness). The thickness of the sheet expressed in micrometers (μm), or thousandths of an inch (mil or points) (mil = 25.4 μm).

Size of a Sheet. The width and length of a sheet of paperboard. The width, always expressed first, is the dimension cut at right angles to the direction of the sheet. Length is the dimension cut in the machine direction. For example, 20 × 30 in. means 20 in. (50.8 cm) cut across the machine by 30 in. (76.2 cm) cut in the direction of the machine. The first dimension is often termed the cross-direction and the second dimension the machine direction.

Structure. The composition of the web (see Figure 1).

Ply. A fibrous layer of homogeneous composition.

Topside. The side of the web opposite to the wire side is the normal paper definition for this term. In the case of paperboard, topside can also mean liner side, generally the better-quality face of the web. Some grades of paperboard are known as double-lined, in which case the two faces of the web are both of high quality.

Liner. A ply of good-quality fiber (usually white), on the topside.

Underliner. The layer (ply) of fiber between the external layer (topside/liner) and the middle.

Middle. The layer (ply) of fiber between the two external layers or between the underliner and an external layer.

Backs. The outside layer (ply) of fiber directly opposite to the liner layer.

Duplex (or Biplex). This is a board consisting essentially of two layers of different furnish.

Triplex. This is a board consisting essentially of three different furnish layers (external furnish layers may have the same composition).

Multiplex. This is a board with more than three furnish layers. Two or more of the layers can have the same composition. Also known as a multilayer board.

Furnish. The constitution of the various materials that are blended in the stock suspension from which the paperboard plies are made. The main constituents are the fibrous material (pulp or secondary fiber), sizing agent, fillers, and dyes.

STRUCTURE AND PROPERTIES

The structure of a typical multiply paperboard (see Figure 1) consists mainly of cellulose fibers. The most common source is mechanical and chemical pulps derived from wood. Secondary fibers are used widely in the cheaper grades. Other sources of cellulose fiber are occasionally used such as straw and esparto.

Examination of the structure shows that it consists of a compact network of the fibers bonded together by mechanical entanglement and chemical links. This structure can be a thick single homogeneous ply or, as is more often the case, of two to eight thinner plies. The multiply construction allows different types of fibers to be used for the different plies. Improved fiber economy is achieved by selected distribution of the fiber types through the web (e.g., by using cheaper fibers for the inner layers). Improved characteristics are obtained by using the correct selection of fiber for the individual layers (e.g., stronger fibers for the outer plies). A typical example of a multi-ply construction is a type of paperboard known as whitelined chip. The top ply (liner) is made of bleached chemical wood pulp, which provides surface strength, good appearance, and printing properties. For the other plies, secondary fiber is used.

It is of extreme importance that the individual plies of multilayer paperboard are bonded together. If the bonding is poor, the structure can break up, with resultant deterioration in strength during subsequent processing and use. The level of bonding achieved, which must meet certain requirements, is dependent on having the right balance of mechanical entanglement and chemical bonding. If, for example, a paperboard sheet is subjected to continuous folding (e.g., the hinged lid of a cigarette carton) and the bonding level is too high, cracking at the hinge will occur.

PHYSICAL CHARACTERISTICS

Mechanical Properties

Because paperboard has the same type of fibrous structure as paper, the strength-to-weight relationship is of the same order as that for paper. Because of its extra thickness and the bonding between the plies, it normally has considerably greater flexural rigidity (stiffness). The choice of furnish for the individual plies influences the

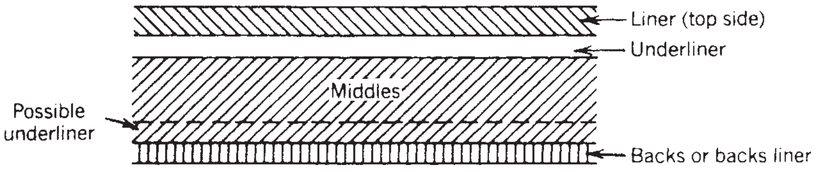

Figure 1. Structure of a typical multi-ply paperboard.

stiffness characteristics: Increased stiffness is obtained by increasing the strength of the outer plies by using a stronger pulp. During the converting of paperboard, it is often necessary to fold the sheet, and because of the thickness of the paperboard, large internal forces are generated. These can cause structural damage to the outer layers (cracking). In order to carry out the folding operation with minimum damage to the outer layers, the ply bonding is broken down locally by a creasing operation before the paperboard is folded. A paperboard sheet has grain characteristics similar to those of paper, with the sheet being strongest in the machine direction.

Optical Properties

Paperboard is normally opaque by virtue of its thickness, and only the color (whiteness, etc.) and occasionally the gloss of its outside plies are important. For a multi-ply paperboard with a white liner on darker underplies (e.g., when wastepaper is used), liner-ply opacity is important in order to maintain the white appearance of the liner surface. If a dark waste paper is used, an underply (underliner), consisting either of a lighter colored waste paper or a mechanical pulp furnish, is applied. This reduces the showthrough of the dark waste layer and improves the whiteness of the liner surface.

Absorptive Properties

The surface of paperboard is often required to have characteristics suitable for printing. To obtain these characteristics the surface layers are sized in ways similar to those used for paper. Paperboard, however, must often be glued during the manufacture of cartons, and for this the surfaces must be absorbent. In a typical case, the back surface has higher absorption characteristics than the liner ply, thus allowing the back ply to absorb some moisture during the gluing operation. Like paper, paperboard changes dimensions if it absorbs moisture. The degree of change depends on many factors such as type of fiber, condition of fiber, and structure of the fibrous network. This effect of dimensional change with change of moisture content presents many problems during converting operations such as printing. For example, in lithography and laminating (see Laminating), serious dimensional change can cause print misregister or curling of the paperboard web.

PAPERBOARD MANUFACTURE

The methods of fiber treatment (beating, refining, cleaning, etc.) are essentially the same as those used in manufacturing paper grades. After the sheet has been formed, the methods used for removing excess water and finishing the web (pressing, drying, calendering, etc.) are also essentially the same as those in the manufacture of paper. The main difference is found at the forming section of the machine, where the web is formed.

Sources of Fiber

The choice is between virgin, or primary, fiber derived from logs of wood, and recovered, or secondary fiber derived from waste paper and paperboard. About 55% of fiber used is virgin fiber and the remainder is from recovered fiber. It must be noted that fibers from all sources are not universally interchangeable with respect to the paperboard products that can be made from them. Some fibers are not not recoverable and some that are recovered are not suitable for recycling. Fiber cannot e recyled indefinitely.

Forming Methods

The following are the main forming methods used in the manufacture of paperboard:

- *Single-ply paperboard:* mainly Fourdrinier.
- *Multi-ply paperboard:*
  1. Fourdrinier with secondary head boxes.
  2. Rotary formers (multiples and using multilayer formers).
  3. Twin wire formers (multiples and using multilayer flow boxes).
  4. Combination of the above.

Fourdrinier Machine

The forming section of a Fourdrinier machine is made up of two essential parts: the flow box and the drainage table. The operation of both parts can influence the structure of the resulting paperboard web. It is normally the aim to deliver the fiber suspension, well-dispersed, to the moving screen at approximately the same velocity as the screen. The concentration going to the screen for paperboard generally ranges within 0.4–1.2%, depending on the furnish and product requirements (Figure 2).

On early machines and some still used today, preliminary dewatering takes place at the table rolls. The action of each table roll can be considered as a pump, with drainage being induced by the suction on the downstream side of each table roll, so that the drainage flow is intermittent. A positive-pressure pulse exists on the upstream side of each table roll, so water is forced up through the screen and the deposited mat. This mechanism has considerable influence on web structure. The magnitude of the positive and negative pulses depends on table roll diameter and screen speed.

Modern practice is to replace the table rolls by stationary foils. These units generate less intense suction pulses than table rolls, and the length of the drainage zone can be considerably extended. These foils are often closely spaced along the Fourdrinier forming table so that there is a gain in available drainage. Further down the Fourdrinier table, when concentration is 3–4%, suction flat boxes are used to continue the drainage at a rate controlled by the level of vacuum in the box. It should be noted that flat vacuum boxes can be used at the initial drainage zone, and today a unit is often used that in effect is a combination of foil sections in a vacuum enclosure

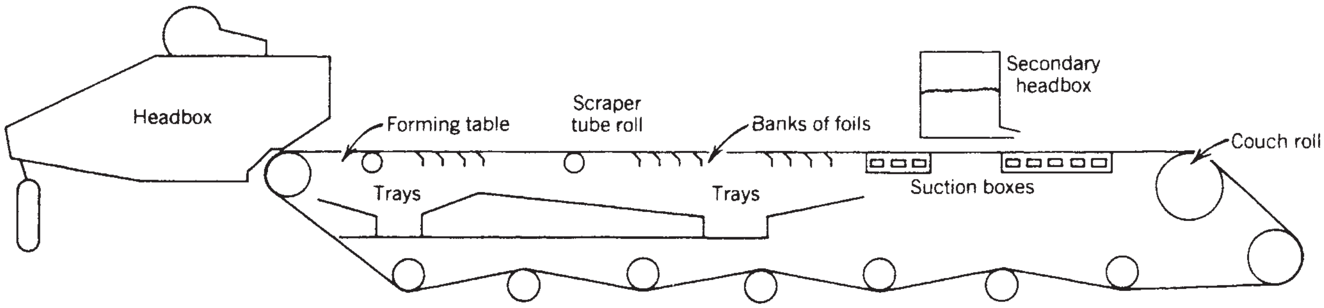

Figure 2. Fourdrinier forming.

(wet-suction box). When producing heavyweight papers and boards, because drainage is more difficult, it is usual to use additional vacuum boxes. This can lead to excessive drag on the screen, resulting in higher power requirements and excessive wear of suction box tops and screen, and may even lead to screen stalling. For the production of multi-ply paperboard, such as linerboard, a secondary flow box is often used. A base ply is formed first and after sufficient dewatering has taken place a second ply is applied by means of the secondary flow box. The associated fibrous suspension is then drained through the base ply, and dewatering is carried out essentially by flat vacuum boxes with thickening as the main mechanism.

Rotary Forming Devices

In these units the forming screen is in the form of a drum and the fibrous suspension is fed to the screen by various methods ranging from (a) simply immersing the rotating screen in a chamber (vat) containing the fibrous suspension to (b) the use of a type of flow box.

Cylinder Mold Machines. There are two basic types: Uniflow and Contra Flow. In the Uniflow machine, the fibrous suspension is fed into the vat at the ingoing face of the cylinder mold (forming screen); in the Contra Flow, the suspension enters at the emerging face (see Figure 3).

The draining forces are low, typically 1–5 in. of water static head difference. The mechanism of forming is complex; and because of the low-drainage forces, considerable washoff of the fragile newly formed web followed by redeposition takes place in the forming area. The forming zone is obviously too long with continual washing off and redepositioning taking place so that the overall mat deposition is inefficient. Various modifications have taken place in attempts to overcome this problem. Further development has led to a variation known as the rotary former.

Roll Formers. Figure 4 shows a typical rotary former. It is easy to see that it consists essentially of a cylinder-forming screen with an associated type of flox box. The forming length has been considerably decreased, and the drainage forces can be far higher than is the case with the previously described cylinder mold units (Figure 4).

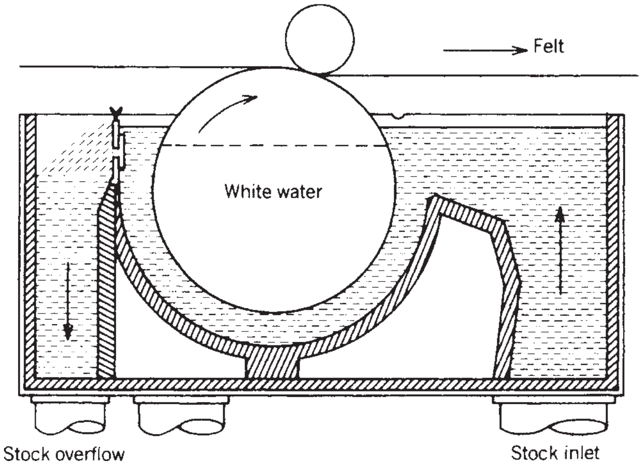

Figure 3. Cylinder-mold forming.

The cylindrical screen can be of relatively simple construction relying on a pressure force in the forming zone to assist drainage or it can be in the form of a suction roll using a series of vacuum boxes to further assist dewatering. Compared to cylinder molds, roll formers have several advantages:

1. They can develop and tolerate higher levels of turbulence in the initial forming zone because the drainage zone is enclosed, whereas the initial forming zone in a cylinder-mold machine starts at a free surface.
2. High pressure in the free suspension and the possibility of using suction on the underside of the forming screen permit a much higher rate of drainage.
3. The rotary former has a more uniform metering of the fibrous suspension onto the forming screen.

Although both types of rotary forming devices can be used to produce paper, the greatest application by far is the manufacture of multi-ply board. A number of the units are operated in series, progressively building up a multi-ply web.

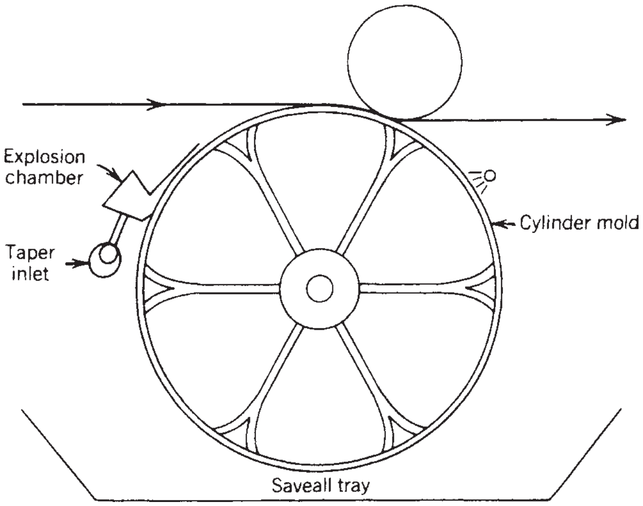

Figure 4. A cylinder former.

Twin-wire Formers

The third basic method used for paper and paperboard forming is a relative newcomer, invented in the 1950s and called the twin-wire method. In this technique the paper web is formed between two forming screens. The idea dates back to the nineteenth century, but it was only in the 1950s that serious development took place, taking advantage of improved ancillary equipment. The process became a commercial reality and a viable contender in some applications. Figure 5 shows a typical twin-wire forming unit, in this case the basic Inverform concept, a UK invention and the first commercial twin-wire system.

In all twin-wire formers, the fibrous suspension is fed into the gap between two converging forming screens by means of a flow box where dewatering and associated web forming takes place. The action related to web structuring in the forming zone is still not fully understood but with regard to dewatering, the twin-wire concept offers the opportunity to carry out symmetrical drainage of the fibrous suspension from both sides. This allows a symmetrically structured web to be formed and provides the opportunity to greatly increase the dewatering potential. Dewatering is assisted by the use of deflectors, which press into the forming screens, and/or vacuum boxes operating on one or both forming screens. A further benefit of the twin wire concept is the absence of a free surface in the forming zone. Wire hs been repalced by plastic netting.

In general terms, multi-ply webs are produced by (a) separately forming the individual plies and then combining them together; (b) forming onto an existing ply or plies, to form more plies; (c) using multilayer (stratified) flow boxes; or (d) a combination of a–c.

Examples of multi-ply arrangements in use today are shown in Figures 6 and 7.

Machine Finishing

The surface of the paperboard web can be treated during the manufacturing process by various means according to the characteristics required of the finished product. It is not unusual to use as part of the drying process an M.G. (Yankee) cylinder, which imparts a smooth surface to one side of the web without too much densification of the web taking place. In the drier section, there is often a size press where chemicals can be added to the surfaces of the web in order to impart certain characteristics (e.g., hard sizing or barrier properties). Paperboard machines often have coaters "in line" with the operation at which one or more layers of coating medium can be applied. At the end of the manufacturing process, right before the windup, one or more stacks of calenders are installed. A stack of calenders consists of a number of horizontal cast iron rolls set one above each other. As the web of paperboard passes through the nips, the calenders increase the smoothness and gloss of the surface of the web.

TYPES OF PAPERBOARD

The simplest types of paperboard are single-ply thick papers used for many nonpackaging purposes (e.g., index board for card-filing systems and display mounting). They have a degree of stiffness and an acceptable appearance (e.g., a uniform surface). This type of paperboard can also

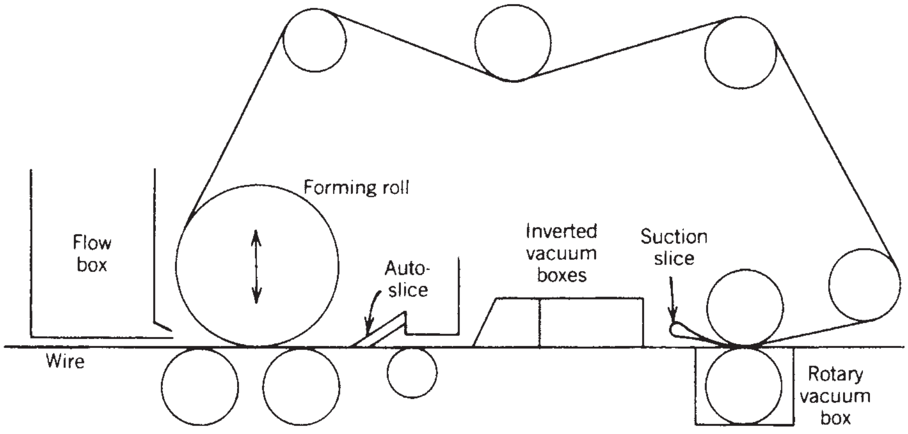

Figure 5. An Inverform (Beloit) twin-wire forming section.

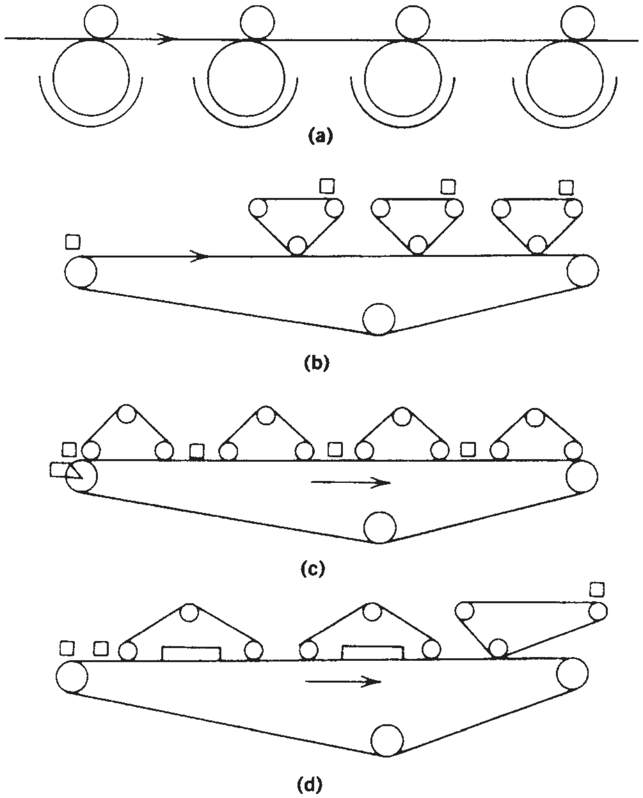

Figure 6. Typical multi-ply forming arrangements. (**a**) Typical cylinder M/C. Common throughout the world. Can be Uniflow, Contra Flow, and so on, including mixtures. (**b**) Fourdrinier with "on top" mini-Fourdriniers. Examples in Europe and the United States. (**c**) Suction breast roll with Inverform units. Example in the United States. (**d**) Fourdrinier with bel bond units and mini-Fourdrinier. Examples in United Kingdom and Europe.

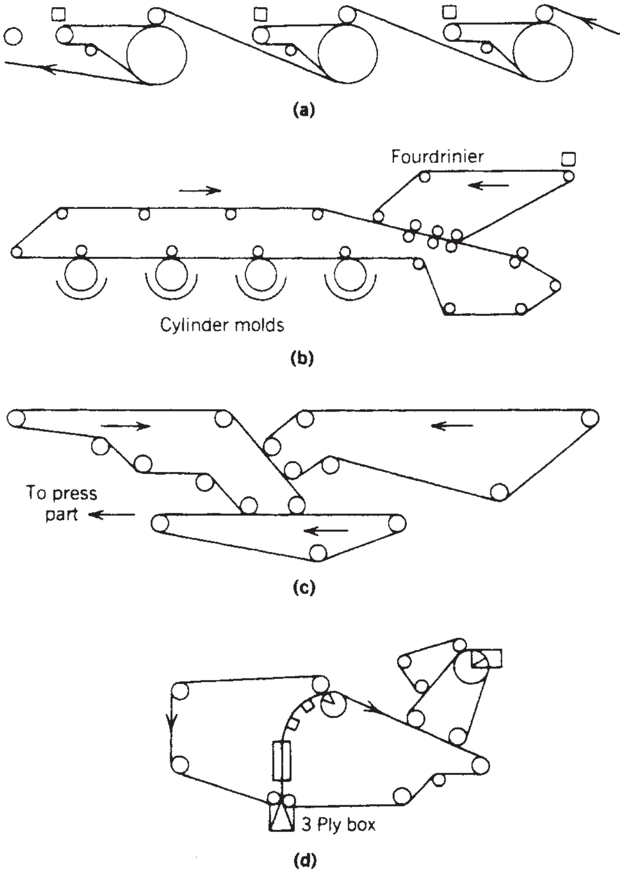

Figure 7. Examples of multi-ply formers. (**a**) Super ultra former. Examples include Japan, the United States, Canada, and so on. (**b**) Typical combination M/C. Examples are mainly in Europe. (**c**) Typical multiwire M/C. An example is Finland. (**d**) Commercial application of contro flow former. An example, is Finland. Contra Flow former combined with an arcu (rotary) former.

be made from waste paper. The product will have good stiffness characteristics, but not necessarily good appearance. Its main use is as package inserts and envelopes. Paperboard with similar structure, but with improved printing surfaces, has a wide range of uses (e.g., high-quality display). The greatest volume of paperboard is used, however, in packaging.

Single-ply paperboard made from 100% bleached-chemical wood pulp is used for food packaging where purity and clean appearance is required together with a degree of strength and a surface of sufficient quality to accept good-quality print. Materials of this type are often coated or laminated with a plastic film to improve barrier properties. Compared to single-ply structures, multiply paperboard can be used over a much wider range of applications because virgin-pulp outer layers with good appearance, strength, and printing properties can be combined with lower-grade middle plies. These paperboards are often combined with other materials such as plastic film or high-quality paper in order to extend the range of application. The general term for this range of paperboard is folding box-board.

Another type of paperboard, known as fiberboard, is used to produce large and strong cases. The materials used for the construction of these containers are made from several layers of paperboard. There are two main types: solid board (two or more boards are laminated together) and corrugated board. In the production of corrugated board, two facings are glued to both sides of the corrugating medium to produce a single-wall corrugated board. For stronger and larger boxes, three facings and two media are used (double-wall corrugated). Triple-wall corrugated uses four facings and three media (see Boxes, corrugated).

The types of paperboard mentioned have, in general, a basis weight range from 200 to 600 g/m^2 ($\sim$41 to 123 lb/1000 ft^2). Thicker and heavier paperboards are used in many applications ranging from building materials to suitcases. They are often produced by laminating many layers of thinner paperboards.

Table 1. Examples of Typical Paperboard Grades

Board Grade	Grammage Range g/m^2 ($lb/1000\,ft^2$)[a]	Typical Furnish	Special Requirements (Physical)	Typical Usage
White-lined folding-box board	200–800 (40–160)	Liner, virgin pulp Underliner, mechanical pulp Middles, waste Backs, mixture (mechanical and chemical pulp)	Bending Printing Plybond Stiffness	General packaging cartons
Chipboard	200–800 (40–160)	100% waste	Bending Plybond	Packaging cartons, tubes, and stiffeners
Gypsum board	300–800 (60–160)	100% waste	Plybond	Outer component of plasterboard
Test liner	150–300 (30–60)	Liner, virgin pulp (kraft): rest, waste	Bending Bursting strength Plybond Crush resistance	Outer components of corrugated containerboard
Linerboard	150–300 (30–60)	100% virgin pulp	Bursting strength	Outer components of corrugated board
Foodboard	200–600 (40–120)	100% virgin pulp (single- or multi-ply)	Bending Printing Plybond Stiffness	All foods, especially frozen foods (high-quality containers)
Liquid packaging	200–400 (40–80)	100% virgin pulp (single- or multi-ply) with barrier (coating and/or laminate)	Bending Printing Plybond Stiffness	Containers for wide range of liquids including milk
Fluting medium	90–200 (18–40)	Typical—100% waste or semichemical hardwood pulp	Crush resistance	Inner components of corrugated containerboard

[a] $g/m^2 = 0.2\,lb/1000\,ft^2$.

Table 1 shows a typical range of paperboard grades with comments on their furnish, requirements, and end usage. The following definitions describe the most common types of paperboard used in packaging.

Body or Baseboard. This is a board that is ultimately treated by, for example, a coating or a surface application.

Lined Board. A multi-ply board with a liner ply, usually of high-grade material (e.g., white-lined chipboard).

White-Lined Board (Duplex). A board with a bleached pulp liner and the remainder of the board made up of, for example, a mixture of chemical pulp and mechanical pulp. Often used for food packaging (2).

Kraft-Lined Chipboard. An unbleached kraft liner on a wastepaper base used for packaging products such as electrical and mechanical components.

Test Jute Liner. This is a type of kraft-lined chipboard. Sometimes the liner is made from a strong kraft waste furnish. This material is combined with fluting medium to produce corrugated board.

Double-Lined Board. A board lined on both sides. For example, the outer surfaces (liner) can consist of bleached pulp and the middle mechanical pulp. It is used for high-quality packaging of foods and cosmetics.

Carton Board (Folding-Box Board). Paperboard of various compositions used for the manufacture of folding cartons and set up boxes.

Foodboard. Single- or multi-ply paperboard used for food packaging. It is hard-sized for water resistance.

Liquid Packaging Board. Also called special-food board, or milk-carton board, this strong board is usually 100% chemical pulp, often plastic-coated. It is formed into containers for a wide range of liquids (e.g., milk, other beverages).

Frozen-Food Board. Single- or multi-ply paperboard with high moisture- and water-vapor resistance. It is often single-ply, made from bleached wood pulp with a surface coating for high-quality print.

Kraft Linerboard. A strong packaging paperboard with a two-ply construction made essentially from virgin kraft pulp and produced on a Fourdrinier machine. The top ply is added by means of a secondary flow box. It is used in the manufacture of large containers, combined with fluting medium to form corrugated board.

Fluting Medium (Corrugating Medium). A board usually with a basis weight of 100–125 g/m^2 (20–25 lb/1000 ft^2) and a caliper of 225 μm (9 mil) made from semichemical hardwood pulp or waste paper. The material is fluted in a corrugating machine and combined with linerboard to produce corrugated board.

Chipboard. A paperboard made from waste paper, used in low-grade packaging, solid fiber, and bookboard. Chipboard is not usually used in contact with food, but is used as an outer carton (2).

Machine-glazed Board. Paperboard that in its manufacture has had one face made smooth and glossy by drying on a large polished steam-heated drying cylinder (Yankee cylinder).

Tube Board. A paperboard generally unsized and smooth finished. It is slit into narrow widths for winding and pasting into spiral or convoluted mailing tubes, cores, etc.

Can Board. Paperboard used for the manufacture of composite cans and fiber drums. The cans are used for packaging a wide range of materials including liquids and powders.

Coated Boards. Paperboards of various grades that have been coated on one or both faces in order to make the surfaces suitable for high-quality printing.

ENVIRONMENTAL CONCERNS

Environmental and waste issues are current major issues (1). Paperboard's advantages are as follows:

1. The main raw material (wood) is based on a naturally renewable resource, the growth of which removes carbon dioxide from the atmosphere, thereby reducing the greenhouse effect.
2. When the packaging is completed, many types of paperboard packaging can be recovered and recycled. If these are not options, it is biodegradable in a landfill.

BIBLIOGRAPHY

B. W. Attwood, "Paperboard" in M. Bakker, ed., *The Wiley Encyclopedia of Packaging Technology*, 1st edition, John Wiley & Sons, New York, pp. 500–506; 2nd edition, A. J. Brody and K. S. Marsh, eds., 1997, pp. 717–723.

Cited Publications

1. M. J. Kirwan, "Paper and Paperboard--Raw materials, Processing, and Properties" in M. J. Kirwan, ed., *Paper and Paperboard Packaging Technology,* Blackwell Publishing, London, 2005.
2. J. G. Brennan and B. P. F. Day, "Packaging" in J. G. Brennan, ed., *Food Processing Handbook,* Wiley-VCH, Weinheim, 2006.

PATENT LAW PRIMER FOR THE PACKAGING INDUSTRY*

Keith A. Zullow
Goodwin Procter LLP**
Raivo A. Karmas
Sandoz Inc.

INTRODUCTION TO THE UNITED STATES PATENT SYSTEM

The Role of Patents

Patents have economic and business implications. For example, in 2006, on the eve of a patent infringement trial involving semiconductor packaging, the parties entered into an $80 million settlement (1). While such multi-million dollar disputes do not occur every day, patents are regularly used to generate licensing revenues, to block competitors from a market, and as negotiating tools. The packaging industry has been active in building patent portfolios in diverse packaging-related technologies such as packaging machines, systems and materials, methods of manufacture, closure systems, and so on. Universities have also become more active in patenting inventions to generate licensing revenues. For example, U.S. Patent 7,213,967, entitled "Method and System for Conservative Evaluation, Validation and Monitoring of Thermal Processing," was issued to researchers from the University of North Carolina (2).

To function most effectively in a world where patents play an ever larger role, scientists and engineers should have at least a basic understanding of patents and what they can and cannot do. Lack of such knowledge can be costly. For example, learning about a competitor's patent too late could prevent a product launch even though plant and equipment have been built and purchased and employees have been hired and trained.

The Foundations of U.S. Patent Laws

The U.S. Constitution. The U.S. Constitution explicitly authorizes Congress to provide a system to encourage innovation by providing inventors with exclusive rights to their discoveries for a limited amount of time. This is the foundation of U.S. patent laws, which grant inventors the right to exclude others, for a limited time, from making, using, selling, or offering for sale in the United States, or importing into the United States, a patented invention. George Washington signed the first patent statute in 1790 (3). Since then, U.S. patent laws have undergone various revisions. Currently, the patent statute is codified in Title 35 of the United States Code. The associated rules and regulations are in Title 37 of

---

* Revised from a series originally published in *Cereal Foods World* **53**(1–5), 00–00, 2008.

** Disclaimer: This column is prepared and published for informational purposes only and should not be construed as legal advice. The views expressed in this column are those of the authors and do not necessarily reflect the views of the respective author's law firm (or its individual partners) or employer.

the Code of Federal Regulations. More recently, Congress has been considering revisions to harmonize U.S. patent law with that of the rest of the world.

The United States Patent and Trademark Office ("USPTO"). The USPTO interprets and applies U.S. patent laws to determine whether inventions are patentable. This chapter focuses predominantly on "utility patents." Utility patents protect the way an article is used and works. To receive a utility patent, an invention must have a utility and it must be novel and nonobvious. These requirements are described below.

Utility: A patentable invention must have a practical use (4). This standard is easy to meet, but there are some restrictions (5). For example, inventions that only have harmful uses are not patentable, nor is the impossible (such as a perpetual motion machine) patentable.

Novelty: A patentable invention must be new (6). It cannot already exist in the public domain, also known as the prior art. For example, an inventor cannot patent what someone else has already done or published. Furthermore, if an inventor publishes his own invention, a patent must be sought within a time period set forth in the U.S. patent laws, or the invention will not be considered new. Therefore, to avoid inadvertently losing the right to obtain a patent, one should speak with a patent attorney before disclosing an invention to the public, through publication, commercial use, or any other means. For example, the courts invalidated a design patent directed to an ornamental juice container design because the patentee had offered for sale containers of an indistinguishably similar design more than one year before applying for the design patent (7). The prior offer for sale rendered the container design non-novel.

Obviousness: Even novel inventions cannot be patented if they are obvious (8). An invention is obvious if it is a straightforward combination or application of prior art information and does not require doing something inventive. For example, two patents directed to meat packing technology were invalidated as obvious in view of prior art patents that, taken together, disclosed features similar to those in the invalidated patents. This was so even though the invalidated patents were the first to have combined the prior art features (9).

In addition to utility patents, one can seek design patents. Design patents cover ornamental features of an object. To receive a design patent, an ornamental feature must be novel and nonobvious. The utility requirement does not apply to design patents.

The Federal Courts. The federal court system interprets and applies the patent laws to resolve disputes between patentees and potential infringers. Patent disputes begin in one of the United States District Courts ("District Courts"). All patent appeals from District Courts are heard by a single court, the Court of Appeals for the Federal Circuit ("the Federal Circuit"). The District Courts must abide by Federal Circuit rulings. Having the Federal Circuit handle all patent appeals promotes uniformity in interpretation and application of patent laws, thereby strengthening the patent system. Appeals from the Federal Circuit go to the U.S. Supreme Court. The Federal Circuit (and all U.S. courts) must abide by Supreme Court rulings.

The Terminology of Patent Enforcement: Infringement, Validity and Enforceability

Patent disputes typically concern the infringement, validity, and/or enforceability of a patent. These terms are explained below.

Infringement: Patents give patent holders the right to prevent others from making, using, selling, or offering for sale in the United States, or importing into the United States, the patented inventions (10). Infringement occurs when one violates such patent rights without authorization (for example, without a license) from the patent holder. The relief for infringement can be damages and/or an injunction (11). Damages are payments of money. Injunctions involve a Court ordering an infringer to stop all infringing activity, even if it means closing plants, recalling products, and eliminating jobs.

Validity: An issued patent is presumed to be valid (12). This means that it can be used to exclude others from infringing unless someone proves that the patent is invalid or unenforceable. Invalidity is a defense to patent infringement and requires proof that a patent, even though it issued, does not satisfy the requirements of patentability, such as utility, novelty, or nonobviousness. Proof of invalidity precludes the patentee from recovering damages or obtaining an injunction even if there is infringement.

Enforceability: Patent applicants have a "duty to disclose" (13) to the USPTO all information that the applicants believe could be material to determining whether a patent should issue. The USPTO Examiner relies on the applicant for such disclosure. In contrast, an accused infringer, through the litigation process, can review the patent holder's internal documents, including notebooks, e-mails, reports, memoranda, and the like. If these documents show that the patentee violated the duty of disclosure (by intentionally failing to disclose information to the USPTO or misleading the USPTO), a court can find the patent unenforceable. An unenforceable patent cannot be enforced, even if it meets the requirements of patentability and is infringed. For example, in a case concerning a patent to nonhydrogenated canola oil having superior oxidative and fry stability, the inventor obtained the patent by telling the examiner that the new oil had superior stability compared to similar oils. The alleged infringer, however, proved that the applicant withheld contradictory data from the patent examiner. As a result, the Court found the patent unenforceable (14).

The Players

The following entities are involved in obtaining and enforcing patents.

The USPTO is the administrative agency empowered to issue patents in accordance with the patent statute and rules. Patent examiners work with applicants to determine whether inventions are patentable.

The Federal Courts are the arbiters of patent disputes. Litigation in the federal courts is an adversarial process in which patent holders attempt to enforce their patent rights and alleged infringers defend themselves. The written decisions of the federal courts set precedent for interpreting and applying patent laws. Federal Circuit patent decisions are available at http://www.cafc.uscourts.gov/dailylog.html.

Inventors are the creators of intellectual property.

Society is the ultimate beneficiary of intellectual property. Intellectual property laws strive to balance the goals of spurring innovation for the benefit of society while preventing removal of common technology, ideas, and business tools from the public domain.

Persons of skill in the art are the contemporaries to whom patent teachings are addressed, and through whose eyes patents are interpreted.

Businesses frequently invest in and own intellectual property, and set strategies regarding what intellectual property to pursue and how to protect and leverage it.

Patent Counsel are company and law firm attorneys involved in planning and implementing patent-related activities, including:

Developing and implementing patent strategies, budgets and priorities;
Drafting and filing patent applications and working with the USPTO to obtain patents;
Managing and maintaining patent portfolios;
Licensing patents;
Monitoring competitor patent activity;
Providing legal opinions regarding patent infringement, validity and enforceability;
Evaluating patent portfolio value and strength prior to mergers or acquisitions, and;
Litigating patent disputes.

A Changing World for Innovation and Its Laws

The value of a patent depends on its scope and strength. Evaluating the scope and strength of a patent requires staying abreast of changes in U.S. patent laws and their interpretation by the Federal Courts. For example, the U.S. Supreme Court has shown a renewed interest in patent cases, recently deciding cases relating to the standard of obviousness (15), the standard for awarding a permanent injunction in patent cases (16), the propriety of a licensee (i.e., the party taking a license from the patent owner) suing a licensor (i.e., the patent owner) to invalidate a licensed patent (17), and application of patent exhaustion doctrine, under which the initial authorized sale of a patented item or process terminates all patent rights to that specific item or process (18). Thus, although U.S. patent laws have existed for over 200 years, they are constantly evolving.

THE INTERPLAY BETWEEN PATENTS AND OTHER FORMS OF INTELLECTUAL PROPERTY

Intellectual property has been defined as "[a] category of intangible rights protecting commercially valuable products of the human intellect" (19). In practical terms, intellectual property relates to patent, trademark, copyright, and trade secret rights. Utility patents and trade secrets protect functionally useful technologies (i.e., the useful arts), but in different ways. Design patents protect ornamental features of an article of manufacture. Trademarks, which include trade dress and servicemarks, protect brand reputation and are extremely important with respect to consumer products packaging. Copyrights protect works of authorship, including computer software programs, and are available for registration of packaging designs. Table 1, at the end of this section, compares the forms of intellectual property discussed in this section.

Patents

Patentable Subject Matter. There are three types of patents: utility and design patents, which relate to packaging, and plant patents. The discussion below focuses primarily on utility patents.

Utility patents cover new and useful processes, machines, articles of manufacture, or compositions of matter (4). These subcategories are broad and cover most inventions, including packaging machinery and systems, chemical compounds, formulations, methods of synthesizing compounds, and more. Abstract ideas, principles of nature, and purely mathematical formulas without a practical application are not patentable.

The USPTO has issued over seven million patents, and it posts thousands of newly issued patents every Tuesday. One can use the USPTO to learn about a field of interest by searching and reading patents and published patent applications as follows:

1. Go to: http://www.uspto.gov/patft/index.html;
2. On the left side of the page, under issued patents, select "Advanced Search";
3. In the Query box, type a search term;
4. Click on the "Search" button.

The result will be a list of issued patents. Utility patents are numbered without prefix, design patents have the prefix "D," and plant patents have the prefix "PP."

Table 1. A Comparison of Patents, Trademarks, Copyrights, and Trade Secrets

	Utility Patent	Design Patent	Trademark	Copyright	Trade Secret
How created	Invented	Invented	Used in commerce	Independent creation once fixed in tangible form	Expended efforts
Governing Law	Federal (35 U.S.C.)	Federal (35 U.S.C.)	Federal (15 U.S.C.: Lanham Act) & State	Federal (17 U.S.C.: post 1-1-1978)	State Federal: Economic Espionage Act
Federal system for conferring rights	USPTO assess patentability	USPTO assess patentability	USPTO ensures criteria are met	No substantive examination Registration with Copyright Office suggested but not required	n/a
Subject Matter	Useful arts	Ornamental features	Words, symbols, sounds, trade dress, etc., used to associate a product or service with its source	Forms of expression, not underlying ideas or functional features	Secret information that provides a competitive advantage
Criteria	Utility Novelty Nonobviousness Other	Novelty Nonobviousnesss Other	No prior user Distinctive mark Other	Original, but not necessarily novel	Secret
Duration	20 years from earliest filing date	14 years from issuance.	As long as trademark is in use	Individual 70 years after the author's death Works for hire, anonymous, pseudonym Earlier of: 95 years from publication or 120 years from creation	As long as kept secret
Nature of exclusive rights	Preclude others from making, using, selling, offering for sale in the United States, or importing into the United States	Preclude others from making, using, selling, offering for sale in the United States, or importing into the United States	Preclude use of confusingly similar mark with similar goods or services	Control over reproduction, derivative works, distribution, performance, display, and digital transmission	Preclude misappropriation

The Nature of Patent Rights.

Patent Rights Are Governed By Federal Law. Each country has its own patent laws. The U.S. Patent Statute is codified in Title 35 of the United States Code. U.S. patents provide rights only in the United States and its territories. Therefore, a patent application must be filed in each country in which patent rights are sought. Furthermore, one does not have to live in or do business in the United States to obtain or enforce a U.S. patent.

The Goal Is Disclosure, Not Secrecy. A patent, and the concomitant right to exclude others, is granted in exchange for disclosing to the public the details of how to make and use an invention, including disclosure of the inventor's understanding of the best way to make and use the invention when the patent application was filed (20). Such disclosure enriches the public knowledge, provides a foundation for future innovation, and gives competitors notice of what a patent covers, so that the competitor can try to avoid infringement. Failure to disclose such information may render a patent invalid if the adequacy of disclosure is challenged during a patent dispute.

An Application Is Examined Before Patent Rights Are Granted. The USPTO grants patents only after a USPTO examiner has reviewed an application and found that it complies with all statutory criteria. To be patentable, an invention must have utility and be novel and nonobvious, and the patent application must satisfy the disclosure requirements mentioned above (21).

A Right to Exclude. A U.S. patent confers upon the patent owner a *time limited* right to *exclude* others from making, using, selling, or offering the invention for sale in the United States, or importing the invention into the United States. A patent does not, however, grant the patentee any right to make, use or sell anything. For example, assume that Company A has patented a novel polymer A and that Company B has patented an improved method of synthesizing the polymer. Company A can use its patent to preclude Company B from using polymer A in any way. Likewise, Company B can use its patent to preclude Company A from synthesizing polymer A using the improved method. Due to the exclusive nature of patent rights, companies in patent-active industries often obtain freedom-to-operate or noninfringement opinions before investing too much on developing or launching a new product.

Duration. The right to exclude others from practicing a patented invention starts on the date that the patent is issued by the USPTO and ends on the patent's "expiration date." Although a patent suit cannot be initiated until a patent is issued, under certain circumstances, damages may be recoverable for infringement that occurred before issuance (22). The right to exclude others from practicing a patented invention ends on the patent's expiration date. The expiration date of U.S. utility patents (and U.S. "plant patents," which are not discussed in this chapter) is typically calculated as 20 years from the date that the application was filed, while design patents expire 14 years from the date the patent is granted. However, the expiration date of a utility patent in force on June 8, 1995 (or that issued on an application that was filed before June 8, 1995) is the greater of 20-years from the earliest applicable filing date or 17 years from the patent grant. In addition, a patent term extension may be granted when specific types of delays occurred during PTO examination of the patent application. Ultimately, determining the expiration date of a patent can be complex. Therefore, it is best to consult an attorney when trying to determine the expiration date of a patent of interest.

Enforcing Patents. Obtaining a patent does not guarantee that a competitor will not attempt to practice the patented invention. This is because the competitor (1) may not know about the patent or (2) may know about the patent but think it is not infringed or that it is invalid or unenforceable (and may have a legal opinion supporting this position). Therefore, a patent holder should vigilantly identify potential infringers, analyze suspected products, and enforce patents as appropriate. This could involve either (a) contacting the potential infringer to discuss licensing or some other arrangement or (b) initiating a law suit seeking damages and an injunction.

Design Patents. Design patents are granted on ornamental designs of articles of manufacture (23). A design patent protects only the appearance of the article and not structural or utilitarian features. In the packaging field, protectable designs include the overall configuration or shape of the package. For example, The Coca Cola Company received a design patent for its contour bottle in the 1930s (24). Ornamentation on the surface of the package may also be patentable. Like utility patent applications, design patent applications are reviewed for novelty and nonobviousness, among other criteria. Inventions with both a utility and a novel appearance may be eligible for both utility and design patent protection.

Trademarks

Subject Matter of Trademarks. Trademarks are any "word, name, symbol or device, or any combination thereof," used by providers of goods and services to distinguish their goods and services from others in the minds of consumers (25). Features such as color, shape, smell, sound, and configuration may also serve as a mark (26, 27). A loyal consumer will often associate a trademark with certain characteristics of a brand, such as quality or durability. This phenomenon is often referred to as "brand recognition." Trademarks, therefore, encourage companies to invest in the goodwill associated with their trademarks by producing products with desirable qualities. Trademark disputes arise when marks on similar goods lead to consumer confusion or deception.

Trademarks Cannot Contribute Functionality to the Product. The purpose of a trademark is to associate a good with its source. A trademark should not provide functionality to the product. For example, a trademark was granted for a unique scent applied to embroidery yarn, because the scent was not a natural or inherent feature of the yarn and provided no utilitarian advantage other than to identify the manufacturer (26). If the scent had utility, patent protection would have been more appropriate.

Trademarks Should Not Be Descriptive of the Product or Service. One should be allowed to accurately describe his products or services without fear of infringing a trademark. Therefore, trademark law is loathe to remove descriptive words from the public domain. In contrast, distinctive words make strong trademarks. Trademarks are, as a result, classified on a spectrum of increasing distinctiveness as generic, descriptive, suggestive, or arbitrary/fanciful (28).

Generic words lack distinctiveness and are ineligible for protection because it would be unfair to deny competitors the right to refer to their products by name. Thus no one can claim the exclusive right to use the phrase "Barrier Bag" as a trademark for bags made from "barrier materials" possessing "barrier characteristics" (29).

Descriptive words describe the product, its attributes, or its claims. Descriptive words have little distinctiveness and are protectable only after developing "secondary meaning" wherein the public associates the mark with the products of a single source. For example, "Squeeze 'n Serve" as applied to a ketchup container was denied trademark registration because it is merely descriptive of a feature of the product and had not developed secondary meaning (30).

Suggestive marks do not name or describe the product, but still suggest qualities or claims of that product. Suggestive words are given trademark rights without demonstrating secondary meaning. "Loc-Top" as applied to bottle closure caps is an example of a suggestive mark (31).

Arbitrary or **fanciful** marks are the strongest. Such marks bear no logical relationship to the product on which they are used. "Apple" as applied to computers is an arbitrary mark. "Exxon" and "Kodak" are made-up terms and are fanciful marks (28).

The Nature of Trademark Rights. Trademarks do not exist on their own. Trademarks must be associated with a product or service. Actual use of a mark (or intended use followed by evidence of actual use) is necessary to establish and maintain a trademark. A valid trademark gives the owner the right to prevent others from using a confusingly similar mark with related goods or services.

Trademarks Are Governed by State and Federal Law. Federal and state laws provide for trademark registration, but the systems differ. State registrations are typically administered by the Secretary of State. Each state has its own requirements. The federal system involves USPTO examination to ensure that there are no conflicting marks and that the mark is proper. Furthermore, to obtain federal protection, a mark must be used in interstate commerce. The "®" symbol denotes a federally registered trademark and may only be used with registered marks. Federal registration lasts 10 years and is renewable indefinitely as long as the mark is in use (32).

Trademark registration is not required, but it offers enforcement advantages if litigation arises. The "TM" or "SM" symbols are available for state registered and unregistered marks. They denote a common law or state registered trademark or servicemark and are not governed by federal statute. Using the appropriate symbol is important because it impacts the defenses alleged infringers can raise in litigation.

Duration. Unlike patents, trademarks can last indefinitely. However, trademarks can be lost through non-use or if the mark becomes "generic." A mark becomes generic when the public starts using the mark as a noun rather than an adjective to describe the product's source of origin. For example, the former trademark "cellophane" became generic (28). While companies invest heavily in promoting trademarks, they also take pains to prevent the trademarks from becoming generic.

Copyrights

Subject Matter of Copyrights. Copyrights protect original works of authorship, including literary, musical, dramatic, choreographic, sculptural, audiovisual, and architectural works (33). These categories are interpreted broadly. For example, a computer program can be considered a literary work, and the decorative features of a belt buckle can be considered a sculptural work.

Novelty is not required to receive copyright protection, provided that the work is original to the author. Thus, independent creation is a defense to copyright infringement. In contrast, independent (but later) invention is not a defense to patent infringement (although it may be a defense to a charge of "willful" infringement, where a patentee seeks "enhanced" damages from an alleged infringer).

Copyrights Protect Form of Expression. Copyrights protect *forms* of expression, not underlying ideas or information conveyed. For example, an engineer could write a manual on how to build a new reaction vessel and obtain copyright protection for the manual. Copying the manual, word for word, without permission would be copyright infringement because the manual, as written, embodies the *form* of expression. However, following the manual's instructions to build the reaction vessel would not violate the copyright. Protecting the vessel itself would require a patent.

Additionally, copyrights do not protect functional features of a device. For example, a copyright might protect ornamental aspects of a belt buckle as a sculptural work, but will not protect the functional features themselves (34). Design patents and trade dress might also protect such nonfunctional features.

Computer Software. Copyright and patent protection overlap when it comes to computer software. A computer program, as a written expression of language, is eligible for a copyright for the program code. The functional aspects of the program as executed—what it *does*—are not copyrightable, but may be patentable.

The Nature of Copyright Protection. The copyright owner has the right to control reproduction of the copyrighted work, preparation of derivative works, distribution of copies, public performances, public displays, and public digital audio transmissions.

Copyright Is Protected by Federal Law. Copyright protection is afforded by federal statute, set forth in Title 17 of the United States Code. Congress adopted the first copyright statute in 1790, and since then it has made substantial changes to the copyright laws in 1831, 1870, 1909, and 1976 (33). For most purposes, the provisions of the 1976 Copyright Act went into effect on January 1, 1978. The 1909 Act continues to be important for protected works that were originally governed by the 1909 Act (33).

Registration Is Available. A work receives copyright protection under the 1976 Copyright Act as soon as it has been "fixed in a tangible form of expression" (33). This is a relatively easy standard to meet. If a work can be perceived and copied, it is in a tangible form of expression. For example, notes on a blackboard can have copyright protection. Registration with the U.S. Copyright Office is not required to get copyright protection, but registration provides benefits. A work can be registered at any time during the life of a copyright (35). For works authored prior to January 1, 1978, the Copyright Act required certain formalities to receive protection and to maintain protection.

Duration. Copyright duration depends on when the work was created. A typical lifespan for a work under the current law can be 70 years from the author's death. However, for "works made for hire," anonymous, and pseudonymous works, it is the earlier of 95 years from publication or 120 years from creation (35). Works under the prior act (i.e., works authored prior to January 1, 1978) could last for a maximum of 95 years.

Overlap Between Copyright, Patent, and Trademark Law

The nonfunctional features of a package may be protectable as trademarks/trade dress, by design patent, and by copyright. For example, a company sued its competitor for allegedly infringing its design patent and copyrights to packaging for a food product. Based on the design patent infringement claim, the court granted preliminary injunctive relief, enjoining the defendant from selling its product in its infringing packaging (36). Because the nature of the protection provided by trademarks, design patents, and copyrights differ, an intellectual property attorney should be consulted when deciding how best to protect nonfunctional features of a package.

Trade Secrets

Subject Matter of Trade Secrets. A trade secret is virtually any type of confidential information that provides its owner a competitive advantage because the information is not generally known or readily ascertainable. Trade secrets can encompass patentable information, such as product formulations, or nonpatentable information, such as customer lists. The "formula" for Coca-Cola® is an example of a trade secret.

The Nature of Trade Secret Rights.

Trade Secrets Are Governed by State Law. Trade secrets are governed by state law, not federal law (except for the Federal Economic Espionage Act of 1996, 18 U.S.C. §§ 1831–39, which is beyond the scope of this chapter). Therefore, the definition of a trade secret can vary from state to state, with important implications. For example, in a case involving a technical executive moving from a first company to a competitor, the court recognized three theories of trade secret misappropriation: actual, threatened, and inevitable disclosure. The first company's position was that the executive would inevitably communicate its trade secrets to the competitor. The court indicated that under an inevitable disclosure theory, misappropriation would exist. But, the case was decided under state laws that did not recognize "inevitable disclosure," and no misappropriation was found (37). Such cases highlight how important it is for companies to have protocols that address expectations and obligations of newly hired employees and employees that leave to find work elsewhere.

Trade Secrets Do Not Involve a Registration or Review Process. As explained above, the goal of patent law is disclosure, not secrecy. In contrast, the value of a trade secret is its secrecy. One does not "apply" for a trade secret. Instead, trade secrets simply exist if kept secret. Indeed, failure to adequately protect the secrecy of the trade secret can result in its loss.

Duration of a Trade Secret. While patent rights expire when a patent expires, trade secret rights last as long as secrecy is maintained. Therefore, maintaining trade secrets requires reasonable measures to prevent careless disclosure by employees or easy access by outsiders. Such measures include establishing and enforcing company policies regarding trade secrets, educating employees about maintaining trade secrets, limiting employee and visitor access to sensitive information and areas, maintaining nondisclosure agreements with employees and third parties, screening information in marketing and sales materials to prevent disclosure of trade secrets, controlling communications with vendors and co-manufacturers, and using noncompete agreements where appropriate. One can sue if a trade secret is misappropriated. Reverse engineering a product to learn a trade secret is not misappropriation.

To Patent or Maintain As A Trade Secret

Companies often must decide whether to seek patent protection or maintain information as a trade secret. In making the decision, one might consider the following factors:

Period of an Invention's Utility: Is the field of invention fast moving? If so, is it worth spending the time, potentially years, to obtain a patent – or is trade secret protection preferable?

Plans to License or Sell the Invention: Will the invention be licensed or sold? If so, patent protection may be preferable.

Ability to Reverse Engineer: Is the invention easy to reverse engineer? If so, patent protection may be preferred. Typically, products are easier to reverse engineer than processes.

Ability to Design Around: Will the invention obtain broad or narrow patent protection? If the invention is narrow and the same result can easily be achieved without using the invention, does the invention merit patent protection?

Combining Patent And Trade Secret Protection: An applicant, after having filed a patent application for an invention, may develop patentable improvements that can be protected by patent or as trade secrets.

Summary Comparison of Patents, Trademarks, Copyrights, and Trade Secrets

Table 1 provides a summary comparison of the different forms of intellectual property discussed above.

OBTAINING A PATENT

This section introduces the concepts and terminology involved in obtaining patents and the strategic purposes for doing so. As explained below, the procedure for obtaining a patent is very rule oriented.

How Patents Fit into Business Plans

Before seeking a patent, a company should understand what role patents can or will play in its business plan. For example, companies obtain patents for different reasons, including:

Excluding others and protecting a competitive advantage
Maintaining customer confidence (e.g., for ingredient suppliers)
Generating licensing revenue
Creating negotiating leverage when dealing with competitors
Attracting potential acquirers

The Value of a Patent

Once a company decides to obtain a patent, it makes sense to obtain the most valuable patent possible. Patent value depends on many factors, including:

Usefulness:. Value increases with increasing usefulness/necessity of the patented technology to the patent holder and/or its competition.

Unassailability:. Valuable patents can withstand challenges to their validity and enforceability during a lawsuit.

Breadth:. Value increases with increasing breadth of the patent, making it harder for competitors to achieve a similar result without infringing the patent.

The Patent Process

There are three primary phases in obtaining a patent: (1) the invention, (2) drafting and filing the patent application, and (3) prosecuting the patent application before the USPTO. Each phase requires a commitment of resources and money. Additionally, phases 2 and 3 involve attorney time and USPTO fees. A schedule of such fees, including reduced fees for "small entities," is available at the USPTO website (38). An overview of each phase is provided below.

The Invention. Many companies have procedures for employees to submit inventions for review and potential patenting. Such procedures often employ an invention disclosure form which:

Identifies the potential inventors and their contribution(s) to the invention
Describes the invention, how to make and use it, and how and when it was developed
Identifies materials (notebook(s), memoranda, etc.) that record the work underlying the invention
Identifies prior art
Identifies past and planned marketing activities
Identifies past and planned publications or presentations regarding the subject matter of the invention

Typically, a committee comprising members from technical, business, and legal departments meet and review invention disclosures to assess commercial viability and determine whether to seek patent protection, rely on trade secret protection, or take no action at all.

The United States has a *first-to-invent* patent system. This means that if two inventors file separate patent applications on the same invention, the patent goes to the first inventor, regardless of who filed the first patent application. Laboratory notebooks and internal memoranda are often used to establish the invention date.

Most of the rest of the world uses a *first-to-file* system, rather than a first-to-invent system. In a first-to-file system, the patent goes to the first individual to file an application—the invention date is irrelevant. Congress is considering changing the U.S. to a first-to-file system to harmonize U.S. patent law with the rest of the world.

Drafting and Filing a Patent Application.

Conducting a Literature Search. If a patent is desired, the invention disclosure and other technical information are forwarded to a patent attorney. The patent attorney may conduct a search of related patents and publications to assist in understanding the potentially patentable aspects of the invention—the aspects not already known in the field. This search may also reveal competitors' patents in the same field that may impact the ability to launch a product based on the invention.

Drafting the Patent Application. The next step is to draft the patent application. This step depends on whether the patent attorney is filing a *provisional* application or a *non-provisional* application. The patent attorney could also file a U.S. application that is a counterpart to a previously filed international application. Such counterparts are beyond the scope of this article.

Provisional applications serve as a temporary placeholder to establish a filing date. They are not reviewed by the USPTO and do not result in issued patents. Provisional applications require a thorough description of the technical details of the invention, but the description can be informal. For example, a technical report, memorandum, or set of data tables may suffice. Provisional applications, unlike nonprovisional applications, do not require claims (described below). Thus, filing a provisional application is convenient when there is no time to draft a more formal nonprovisional application before publicly disclosing the invention. Additionally, filing a provisional application buys an applicant some time to assess whether the invention merits the costs associated with filing a nonprovisional application, which can be significantly more than the cost of filing a provisional application. A non-provisional application must be filed within a year of the filing of the provisional application.

A nonprovisional patent application is the formal application that the USPTO examines for patentability. Nonprovisional applications must include a written description of the invention and at least one claim. The requirements for filing a nonprovisional application are available at the USPTO website (38). An applicant can file a nonprovisional application without filing a provisional application. Only a nonprovisional application can issue as a patent. Attorney time and filing fees can make filing a nonprovisional application expensive.

The Claims Define the Invention. Patent claims, which appear at the end of each patent, define the invention. They are the legal boundaries of the patentee's right to exclude. Drafting claims typically involves discussing the invention with the inventors and probing whether and how the invention can be applied beyond the immediate uses envisioned by the inventor. In drafting patent claims, the patent attorney balances the conflicting goals of obtaining the broadest possible protection for the novel aspects of the invention without encompassing subject matter that was already known in the field. Patent attorneys often achieve this balance by drafting a series of claims of varying breadth.

Other Statutory Requirements of the Application. In drafting the application, the patent attorney considers criteria the patent examiner will use to assess patentability, including utility, novelty, and nonobviousness, and satisfying the *definiteness, written description, enablement*, and *best mode* requirements described below (20).

Definiteness: The claims of a patent must clearly set forth the patented subject matter, such that one can determine whether or not they infringe the patent.

Written Description: The patent specification must describe the invention in a way that demonstrates that the inventor actually possessed the claimed invention. For example, when during prosecution (i.e., the back-and-forth communication with the examiner to obtain a patent, described below), an applicant amended a claim to cover packaging configurations that lacked "an annular reinforcing bead," while everything in the patent (i.e., the abstract, specification, and drawings) described that feature as mandatory to the invention, a court found the amended claim invalid for failure to comply with the written description requirement of the patent statute (39).

Enablement: The patent specification must enable those skilled in the art to make and use the invention without undue experimentation. This entails providing information that is necessary to make and use the invention and that would not otherwise be known. It does not require providing basic information that would be know to people working in the field.

Best Mode: The patent specification must disclose the best way of practicing the invention known to the inventors at the time of filing the application. For example, if the inventors believe that a particular grade of plastic works best in the invention, they must disclose that grade in the application.

Determining Inventorship. In the United States, only inventors can apply for patent applications. The inventors can assign ownership of the invention to a company, but the application must be filed by the inventors. Consequently, the patent attorney must determine the identity of the true inventors. Although inventorship can be corrected, improper inventorship is also a basis for invalidating a patent.

Each claim of a patent can have one or more inventors, and different claims can have different inventors. Each inventor should be included in the patent application. Therefore, joint inventorship is common. Joint inventorship may cause issues for inventions created with outside consultants, comanufacturers, or research institutes. Therefore, when working on joint projects, it is important to consider up front who will own inventions resulting from such projects. Issues may also arise when an inventor has left a company and is needed to participate in filing a patent application.

Accuracy of the Application. Before filing an application with the USPTO, the inventors must carefully review the application for accuracy. The inventors then sign a *Declaration* stating that they are the original inventors and that the contents of the application are accurate. In the

Declaration, the inventors also acknowledge their *duty of candor* to the USPTO. This duty is described below.

The Duty of Candor. Under U.S. patent law, the patent applicants (including each named inventor) have a duty to provide to the patent examiner any information that could be material to the patentability of their invention. Such information could be prior art, public presentations, or data relating to the invention. This is known as the "duty of candor." This duty begins with the filing of the application and continues until the patent issues. This duty may be satisfied by identifying such information in the application itself, or by separately submitting materials to the USPTO in what is called an *Information Disclosure Statement*. Failure to comply with the duty of candor can render an issued patent unenforceable.

The Filing Date and Its Implications. Once the USPTO receives an application, it assigns a filing date. This date is the presumptive date of invention and is used by the patent examiner when searching for prior art to assess novelty and nonobviousness. Furthermore, in the United States, an inventor has a one-year grace period to file a patent application after a public disclosure or public use of the invention by the inventor (or anyone else). The filing date marks the end of the one-year grace period. This grace period distinguishes U.S. patent law from that of most of the rest of the world, where patent rights are not available after an invention has been disclosed to the public. Therefore, before publicly disclosing or publicly using an invention, it is important for the inventor (or intellectual property management) to discuss such potential disclosures with a patent attorney to (1) ensure that the U.S. patent application is filed within one year of such events and (2) consider how such disclosures might impact patentability in other countries.

Prosecuting the Patent Application. The USPTO publishes its *Manual of Patent Examining Procedure* ("the MPEP") to provide patent examiners, applicants, and attorneys a reference on practices and procedures relating to prosecution of patent applications before the USPTO. The MPEP is available on the USPTO website at http://www.uspto.gov/web/offices/pac/mpep/mpep.htm.

The USPTO assigns patent applications to examiners who specialize in the relevant technology. The examiner reviews the application to ensure that it complies with the statutory requirements described above. The examiner then communicates with the applicants regarding whether the application meets such requirements. This process of communication between applicant and examiner is referred to as *patent prosecution*. The USPTO maintains a written record of these communications known as the *prosecution history* of the application/patent. The public and competitors may rely on the prosecution history to aid in understanding the scope of the patent claims. The applicant and examiner may speak with each other, but only written communications become part of the prosecution history on which the applicant, public, and competitors may rely. Such written communications can include summaries of oral communications.

Office Actions. If an application does not meet the requirements for patentability, the examiner issues an *Office Action*. An Office Action is a written communication from the examiner containing a claim-by-claim analysis of the invention. The examiner separately either *allows* or *rejects* each claim, providing the basis for each rejection. Office Actions become part of the prosecution history.

Office Action Responses. Applicants have a set period of time, typically two to three months, to respond to an Office Action. This time can be extended through payment of extension fees. A response can address a rejected claim by canceling the claim, amending the claim to attempt to overcome the rejection, or explaining why the rejection is wrong and arguing for allowance of the unamended claim.

A response can include a submission of data or other information in support of the applicant's arguments. Office Action responses become part of the prosecution history.

Examiner Interviews. In addition to or in lieu of submitting an Office Action response, an applicant can request an *Examiner Interview* to discuss the invention, discuss the examiner's bases for rejection, and explain the applicant's counterarguments. Interviews can be telephonic or face-to-face. After an examiner interview, the examiner typically issues an *Examiner Interview Summary*, summarizing what was discussed in the examiner interview. Examiner Interview Summaries become part of the prosecution history.

The Prosecution History. As explained above, all written communications between applicant and examiner go into the prosecution history. Thus, any admissions or explanations in the prosecution history can be used by accused infringers during litigation, or by competitors trying to interpret the scope of a patent. This prevents applicants from (a) adopting a narrow view of the invention with the examiner for purposes of patentability and (b) later arguing for a broad interpretation when asserting the patent in litigation. Therefore, the ability to amend claims and debate claim scope with the examiner is not a substitute for drafting a well-thought-out application.

Publication of the Application. Patent applications are generally published by the USPTO about 18 months after filing, even if the application is still being prosecuted and even though the application may never issue as a patent. Applicants who file a patent application only in the United States may request that the application not be published. This enables an applicant to maintain the information in the patent application as a trade secret until the patent issues, if it issues. If such a request was made and a patent never issues, the USPTO will not make the information of the patent application available to the public.

Monitoring published applications can provide insight into competitor activities. The USPTO posts newly published patent applications every Thursday(38). Once a patent application is published, its prosecution history becomes publicly available and is accessible at the USPTO website at http://portal.uspto.gov/external/portal/pair.

Final Rejection or Allowance. Eventually, a patent application is either allowed or the examiner issues a final rejection of one or more claims. If at least one claim is allowed, the applicant can obtain a patent on that claim, and file a continuation application (see below) to continue prosecution of the other claims. The applicant can also appeal the Examiner's rejections.

Upon issuance, the patent owner's rights and the presumption of validity attach. The USPTO issues new patents every Tuesday.

The Patent Family. During prosecution, before a patent application is abandoned or matures into an issued patent, an applicant may file related applications, which may include *divisional applications*, *continuation applications*, and *continuation-in-part applications*, each of which is briefly described below. The original application is called the *parent* application.

Divisional Applications: If a parent application contains claims directed to more than one invention, the examiner may require that the applicant prosecute the claims to the different inventions in different applications. For example, if an application contains claims to both a new compound and a new package, the examiner might require the applicant to prosecute the compound claims in one application and the package claims in another. The applicant must then choose which type of claim to prosecute in the original parent application and cancel the unchosen claims. The applicant can then file a *divisional application* to prosecute the unchosen claims. The divisional application is limited to subject matter disclosed but not pursued in the original application.

Continuation Applications: A *continuation* can be filed to continue prosecution of finally rejected claims with new arguments or amendments. A continuation may also be useful where only some claims in the original application have been allowed and some have been rejected. In such circumstances, the applicant can choose to have a patent issue on the allowed claims and pursue the rejected claims in the continuation application.

Continuation-in-Part Applications: A *continuation-in-part ("CIP")* is an application filed during the pendancy of a parent application that contains some *new matter*—that is, information that was not in the original application. The original matter in the CIP is entitled to the filing date of the original application, but the new matter is not. New matter may be added for any reason, including providing support for claim amendments necessary to overcome an examiner's rejection or to pursue improvements made to an invention during prosecution of the application.

Divisional, continuation, and CIP applications must be filed during the pendancy of the parent application.

Maintenance Fees. The USPTO requires patent holders to pay significant maintenance fees at 3.5, 7.5, and 11.5 years after issuance, respectively, to keep a patent alive. Companies often reevaluate the value of a patent when maintenance fees are due because paying maintenance fees on patents claiming unused or outdated technology may not make business sense.

Reissue and Reexamination. After a patent issues, applicants and third parties can have the USPTO reconsider the issued patent through *reissue* and/or *reexamination* procedures.

Reissue: A patent holder can seek reissue to correct mistakes in a patent, such as claiming too much, or claiming too little. A reissue that narrows the claim scope can be pursued any time before patent expiry, but a reissue that broadens the claim scope must be requested within two years after issuance.

Reexamination: Reexamination allows the patentee or a third party to request that the USPTO reexamine a patent's claims in light of specific pieces of prior art. The USPTO will only conduct a reexamination upon presentation of a substantial new question of patentability. A patentee may seek reexamination to bolster the strength of a patent—that is, reinforce the presumption of validity in light of newly discovered prior art. A competitor may seek reexamination as a relatively inexpensive alternative to litigation to invalidate a patent. However, such an approach can backfire where, because the competitor's rights are limited during reexamination, the patent makes it through reexamination and is actually strengthened by the procedure.

THE ANATOMY OF AN ISSUED PATENT

Below we familiarize the reader with the structure of patents to facilitate reading, navigating, understanding, and using patents.

Sections of a Patent—Overview

Reproduced below, as Figure 1, is the cover page of U.S. Patent No. 6,639,004, entitled "Method For Making Odor Sorbing Packaging Material."

In addition to the cover, a patent also contains drawings (where necessary), a specification, and at least one claim. Below we provide a brief overview of the content and function of these parts.

The Cover. The cover of a patent includes the patent number and issue date, its title, the names of the inventors and patent owner or assignee, information regarding the filing of the application, information regarding related references, and an abstract. These parts of the cover are described below.

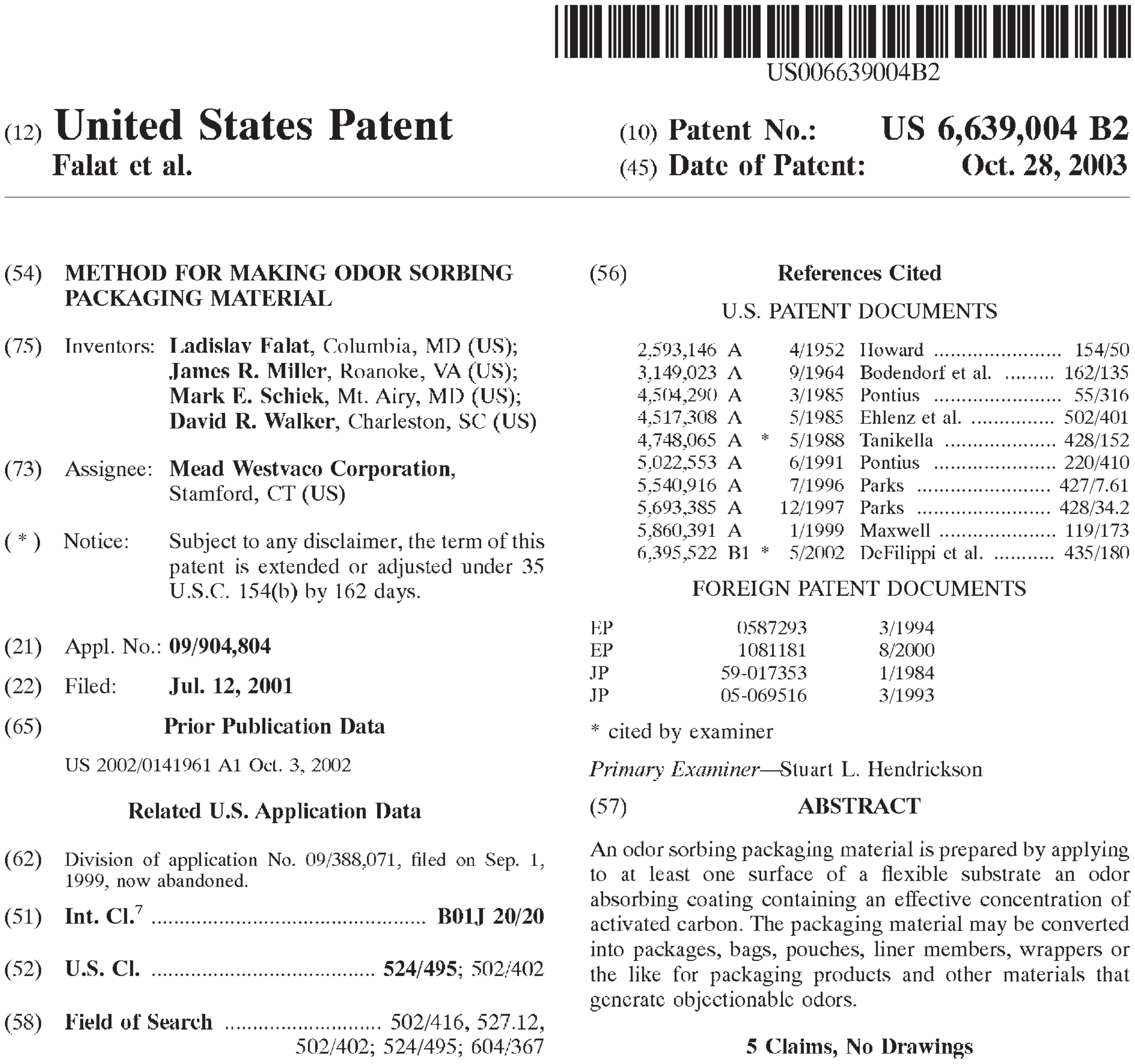

US006639004B2

(12) **United States Patent**
Falat et al.

(10) **Patent No.: US 6,639,004 B2**
(45) **Date of Patent: Oct. 28, 2003**

(54) **METHOD FOR MAKING ODOR SORBING PACKAGING MATERIAL**

(75) Inventors: **Ladislav Falat**, Columbia, MD (US); **James R. Miller**, Roanoke, VA (US); **Mark E. Schiek**, Mt. Airy, MD (US); **David R. Walker**, Charleston, SC (US)

(73) Assignee: **Mead Westvaco Corporation**, Stamford, CT (US)

(*) Notice: Subject to any disclaimer, the term of this patent is extended or adjusted under 35 U.S.C. 154(b) by 162 days.

(21) Appl. No.: **09/904,804**

(22) Filed: **Jul. 12, 2001**

(65) **Prior Publication Data**

US 2002/0141961 A1 Oct. 3, 2002

Related U.S. Application Data

(62) Division of application No. 09/388,071, filed on Sep. 1, 1999, now abandoned.

(51) **Int. Cl.**^{7} **B01J 20/20**

(52) **U.S. Cl.** **524/495**; 502/402

(58) **Field of Search** 502/416, 527.12, 502/402; 524/495; 604/367

(56) **References Cited**

U.S. PATENT DOCUMENTS

2,593,146 A		4/1952	Howard	154/50
3,149,023 A		9/1964	Bodendorf et al.	162/135
4,504,290 A		3/1985	Pontius	55/316
4,517,308 A		5/1985	Ehlenz et al.	502/401
4,748,065 A	*	5/1988	Tanikella	428/152
5,022,553 A		6/1991	Pontius	220/410
5,540,916 A		7/1996	Parks	427/7.61
5,693,385 A		12/1997	Parks	428/34.2
5,860,391 A		1/1999	Maxwell	119/173
6,395,522 B1	*	5/2002	DeFilippi et al.	435/180

FOREIGN PATENT DOCUMENTS

EP	0587293	3/1994
EP	1081181	8/2000
JP	59-017353	1/1984
JP	05-069516	3/1993

* cited by examiner

Primary Examiner—Stuart L. Hendrickson

(57) **ABSTRACT**

An odor sorbing packaging material is prepared by applying to at least one surface of a flexible substrate an odor absorbing coating containing an effective concentration of activated carbon. The packaging material may be converted into packages, bags, pouches, liner members, wrappers or the like for packaging products and other materials that generate objectionable odors.

5 Claims, No Drawings

Figure 1. Cover of U.S. Patent 6,639,004.

Patent Number: The patent number is at the top right-hand corner of the cover. Here, the patent number is 6,639,004. Patents are frequently referred to by the last three digits of the patent number. Thus, we refer to U.S. Patent No. 6,639,004 as "the '004 patent."

Issue Date: The issue date is just below the patent number. The '004 patent issued on October 28, 2003. A patent owner's rights and the patent's presumption of validity begin on the issue date.

Title: The title of a patent appears in the upper-left-hand column of the cover. The '004 patent is entitled: "Method for Making Odor Sorbing Packaging Material." This provides some guidance regarding the subject matter of the patent. However, what a patent protects is defined by its claims, not its title. Indeed, due to changes in claims during prosecution, the title may not completely or accurately reflect the subject matter claimed. Therefore, any review of a patent should go far beyond the title. For example, the title of the '004 patent recites a "method" of making materials, but the claims are directed to materials, not methods of making them.

Inventors: Beneath the title is a listing of the inventors, Ladislav Falat, James R. Miller, Mark E. Shiek, and David R. Walker.

Assignee: Beneath the listing of inventors is identification of the assignee of the '004 patent, Mead Westvaco Corporation. A patent is personal property and therefore can be sold, mortgaged, transferred, and so on. Under U.S. patent laws, such transfers are made by using a written instrument known as an assignment. The person transferring the patent, often the inventor, is the assignor, while the recipient is the assignee. Employment contracts often require that an employee assign to the employer/company rights to any invention made during employment. Patents can be assigned multiple times. The USPTO maintains an assignment database within its website (40). The cover may not have the most current assignment information. For the most current assignment information, one should check the assignment database and check with the USPTO assignment office.

Filing Date: Beneath the assignee information is filing date information. The cover of the ’004 patent indicates that the application for the ’004 patent was filed on July 12, 2001.

Notice Regarding Patent Term: The determination of the expiration date of a patent can be complex and is beyond the scope of this article. One fact to consider in such a determination is whether any portion of the patent term has been disclaimed or extended. The cover indicates that the term of the ’004 patent has been extended by 162 days.

Prior Publication Data: U.S. patent *applications* are typically published about 18 months after they are filed. The publication date is provided beneath the filing date. The cover indicates that the application for the ’004 patent was published on October 3, 2002 as publication number 2002/0149161 A1.

Related U.S. Application Data: Beneath the filing date is the heading “Related U.S. Application Data.” This part of the patent provides information regarding related applications, such as divisionals, continuations, and continuations-in-part. This section indicates that the application that matured into the ’004 patent was a divisional application filed off of an earlier application having serial number 09/388,071 (“the ’071 application”). The ’071 application was filed on September 1, 1999 and is now abandoned.

U.S. Cl.: The USPTO classifies patents into classes and subclasses based on subject matter. All issued patents are classified according to this system. The class is identified by the heading “U.S. Cl.”, found beneath the related U.S. application data. The classifications provide information about the subject matter of the patent.

Field of Classification Search: This section lists the classes and subclasses that the patent examiner searched when assessing the novelty and obviousness of the ’004 patent. One can search the USPTO patents database by class and subclass to uncover patents in a field of interest. The USPTO website provides an index of classes (41). For example, the following are some classes relevant to packaging:

053	Package making
065	4Glass manufacturing
106	Compositions: coating or plastic
156	Adhesive bonding and miscellaneous chemical manufacture
206	Special receptacle or package
215	Bottles and jars
224	Package and article carriers
229	Envelopes, wrappers, and paperboard boxes
264	Plastic and nonmetallic article shaping or treating: processes
413	Sheet metal container making

References Cited: The cover lists the U.S. patents, foreign patents, and other materials the examiner considered when assessing patentability. Such materials often provide a starting point for learning more about the subject matter of an invention, or for an alleged infringer trying to attack the validity of a patent.

Abstract: The cover includes an abstract of the invention at the bottom of the right-hand column. The abstract provides an overview of the invention. Like the title, due to changes during prosecution, the abstract may not completely or accurately reflect the subject matter ultimately claimed.

Drawings. After the cover come drawings, if there are any. Drawings are required, if necessary, to understand the invention. Therefore, the USPTO may deem an application incomplete if drawings are absent. Drawings are typically explained in the specification (described below). The cover of the ’004 patent indicates that it has no drawings.

Specification. The specification is the text of the patent. It comes after the cover and drawings and before the claims. In essence, the specification is a “user manual” that should provide enough description and detail to enable persons skilled in the art to make and use the full scope of the claimed invention. It defines terms used in the claims and often provides examples of the invention. It is the specification that must satisfy the *written description*, *enablement*, and *best mode* requirements of patentability. Therefore, the specification must be drafted as broadly as necessary to support broad claims, and with as much specificity as necessary to support narrow claims. Understanding the claims of a patent often requires careful review of the specification.

A specification typically has the following sections: background of the invention; summary of the invention; brief description of the figures; detailed description of the invention; examples, and claims (which are technically part of the specification).

The background of the invention describes the general field of the invention, notes insufficiencies in existing technology, and explains generally how the invention solves such problems. The summary of the invention usually provides additional information about how the invention solves the problem addressed by the invention. The brief description of the drawings briefly explains what the drawings show. The detailed description of the invention typically explains the invention and how to make and use it. Finally, the examples demonstrate how the invention works, either by describing actual experiments and results or by setting forth methods that could be used and indicating expected (but not actual) results (known as “prophetic” examples). A proper specification should make clear whether an example is actual or prophetic.

Claims. The claims are found at the end of the patent and follow the statement “I Claim” or “What is claimed is.” The claims include “limitations” that define the boundaries of a patent owner’s right to exclude. Such limitations are (a) the elements against which patentability is tested and (b) the elements that a product or process must contain to infringe. Thus, any review of a patent must include careful consideration of the claims.

Claims are numbered. By statute, each claim must be written as a single sentence. As a consequence, claims often are less readable than typical English sentences. Claims usually have three parts: a preamble, a transition, and a body. For example, consider the following hypothetical claim in which the parts are denoted.

$$1.\quad \underbrace{\text{A composition}}_{\textit{Preamble}}\ \underbrace{\text{consisting of}}_{\textit{Transitional Phrase}}$$

$$\underbrace{\text{ingredient A, ingredient B, and also ingredient C.}}_{\textit{Body}}$$

Below we provide some basic information about these three claim parts. Books have been written about claim drafting and how to determine the meaning of claims. Such detail is beyond the scope of this article (42).

The Preamble. A preamble is an introductory statement that names the thing that is claimed or defines the field of invention. The preamble may or may not serve as a claim limitation. If a preamble serves as a claim limitation, it narrows the claim. In other words, it provides an additional requirement a product or process must possess to infringe the claim.

The Transition. The transition comes between the preamble and the body. One of the following two transitional phrases, or a variation thereof, is used in most claims: (1) *consisting of*, as used in the hypothetical above, or (2) *comprising*. The transitional phrase used affects how a claim is construed.

Consisting Of: The term “consisting of” is referred to as a “closed” transitional phrase. This means that the claim covers products and process that include only the limitations that follow the transition. For example, in the hypothetical above, the claim covers only compositions that contain ingredients A, B, and C; compositions with only A, B, and C would infringe claim 1. The claim would not cover compositions that also contain ingredient D; a composition containing A, B, C, and D would not infringe claim 1.

Comprising: The term “comprising” is known as an “open” transitional phrase. This means that the claim covers products and processes that include each limitation that follows this phrase but that infringing products can also include additional elements. For example, had the hypothetical above used “comprising” as the transitional phrase, the claim would cover compositions that contain ingredients A, B, and C, whether or not they also contain ingredient D; a composition containing A, B, C, and D would infringe the claim if it were written with “comprising” as the transitional phrase.

The Body. The body of the claim is everything that follows the transition phrase. The body contains the *limitations* of the claim. As noted previously, limitations are (a) the elements against which patentability is tested and (b) the elements that a product or process must contain to infringe. In claim 1, above, A, B, and C are limitations.

There are two primary claim types: independent and dependent. *Independent* claims stand on their own. *Dependent* claims relate back to or “depend from” a previous claim. A dependent claim is construed to contain each limitation of the claim from which it depends, as well as the additional limitations added in the dependent claim itself. Consider the following hypothetical claim set:

1. A packaging film comprising laminate A, laminate B, and an adhesive.
2. The packaging film of claim 2 further comprising a coating.
3. The packaging film of claim 3, wherein the coating is impermeable to moisture.

Claim 2 is an independent claim that has three limitations: laminate A, laminate B, and an adhesive. Claim 3 is a dependent claim that depends from claim 2. Therefore, claim 3 contains all three limitations of claim 2 (laminate A, laminate B, and an adhesive), as well as the additional limitation of a coating (whether impermeable to moisture or not). Claim 4 depends from claim 3 (which depends from claim 2). Therefore, claim 4 contains the laminate A, laminate B, and the adhesive limitations of claim 2 and the coating limitation of claim 3, with the additional limitation that the coating must be impermeable to moisture. A competitor need only infringe one patent claim to be liable for infringement and face an injunction and/or infringement damages.

Claim Construction. Claim construction is a very complicated process by which the claims are interpreted to understand what they do and do not cover. It requires consideration of the language of the claims themselves, the specification, and the prosecution history of the patent (e.g., representations made to the examiner to obtain the patent). Claim construction begins with the language of the claim. Typically, the words and phrases in the claims are given their ordinary meaning as used and understood by people in the field of the invention. However, a patentee can be his or her own “lexicographer,” meaning that the patentee may use claim terms in a way that is markedly differently from their ordinary meaning, provided that the patentee’s definition is clearly set forth in the patent specification. Even seemingly simple terms may lead to claim construction disputes during litigation. Resolution of such disputes often requires a court hearing that can last hours or even days. For example, in one patent dispute, the parties fought about the meaning of the claim term "generally convex" (43). Resolution of such claim construction issues is often determinative of whether a patent is valid and/or infringed.

Legal Opinions

Understanding what a claim covers is crucial to assessing issues of infringement and validity. For example, if a business wants to determine if a proposed new product may infringe an existing patent, it must (1) construe the claims and (2) compare the construed claims to its new product. Infringement is not determined by comparing a proposed product to the patent holder's product. Infringement is tested against what is claimed in the patent. Similarly, to assess the validity of a patent, one must (1) construe the claims and (2) consider the construed claims in view of the prior art and other patentability requirements to determine if the claimed invention meets the requirements of patentability. Federal courts strictly adhere to these two-step processes.

Due to the complexity of the claim construction process, a patent attorney is typically consulted. For example, companies often seek *freedom-to-operate opinions* or *non infringement opinions* from patent attorneys before launching a new product. Such opinions entail searching the patent landscape to identify patents of interest, analyzing the patents (claims, specification, and prosecution histories), construing the claims, and comparing the claims to the proposed product to assess the potential for infringement liability. If potentially troublesome patents are identified, the patent attorney may be asked to assess the validity and/or enforceability of the patent. The patent attorney may also be asked for advice regarding design around options—that is, ways to achieve the same result without infringing any potentially problematic patent claims.

ENFORCING PATENTS

The rights that accompany an issued patent are not self-executing. Although the patent holder has the right to exclude competitors from making, using, selling, or offering for sale in the United States, or importing into the United States, the patented invention, the mere existence of a patent does not ensure that infringing competitors will not enter the market. For example, a competitor might sell a potentially infringing product because the competitor (1) did not know about the patent, (2) believed that the product would not infringe the patent, (3) believed that the patent was invalid, (4) believed the patent was unenforceable, and/or (5) believed that infringement would not or could not be detected.

This section addresses the identification of potential infringers, the interaction between business goals and appropriate enforcement action, and the litigation process.

The Several Phases of Patent Enforcement

Pre-Enforcement. Before attempting to enforce a patent, a patentee must first determine whether there are potential infringers. This typically involves monitoring the market to identify potentially infringing activity, obtaining potentially infringing products, and assessing whether such products infringe. The scientists and engineers working within a field, reading related literature, and attending trade conferences are often a source of such competitive information. Monitoring published patent applications and issued patents can also provide insight regarding competitor activities and where infringement might arise.

Once a potentially infringing product or process is identified, one must construe the claims and compare them to the potentially infringing product or process to determine whether there is infringement (see section entitled "The Anatomy of an Issued Patent," above). Patent counsel can be very helpful construing claim terms. Again, whether the patentee has a product of its own, and how that product compares to the potentially infringing product, is not relevant to the infringement analysis.

Deciding What to Do About Potential Infringer. Upon identifying a potential infringer, and concluding that a product or process likely infringes, the patent holder must decide what to do. For example, the patent holder could contact the potential infringer with the goal of negotiating a license for royalties or a cross-license. Alternatively, the patent holder could provide the potential infringer with notice of the patent and ask the potential infringer to remove a potentially infringing product from the market. The patent holder may instead decide that the ultimate goal is a license or cross-license, but choose to initiate a litigation to signal the patent holder's belief in the strength of the patent, hoping that this will result in better license terms. Or, the patent holder might decide not to assert the patent for business or other reasons.

Ultimately, how a patent holder proceeds will depend on the specific facts. However, the decision making process often includes considering and weighing the answers to at least the following questions:

1. What role does the patent play in the patent holder's business strategy? For example, does the patent protect a market that is important to the patent holder and in which the patent holder competes? If so, the patent holder has increased incentive to sue to exclude competitors as opposed to providing a license that would likely increase competition.
2. What is the relationship, if any, between the patent holder and the potential infringer? For example, are they fierce competitors or have they worked out patent licenses and other business agreements in the past? What relationship does the patent holder desire? If a friendly relationship is desired, litigation may not be the best approach.
3. How strong is the patent at issue? For example, are there documents created during prosecution of the patent that might provide a basis for alleging

inequitable conduct? Through discovery (discussed below), alleged infringers will often find weaknesses in the patent—some previously known to the patent holder and some previously unknown. Weaknesses in a patent provide a motivation for a nonlitigation resolution.

4. How much time would a patent infringement lawsuit require from important scientists or executives, and would such time commitments disrupt important R&D or business functions? The level of disruption must be weighed when determining whether to bring suit.
5. Does the potential infringer have any patents that could be used against the patentee? If so, a cross-license may be an appropriate goal, because a lawsuit (and countersuit by the competitor) might result in neither party being able to market their respective products.
6. Is the relevant market large enough, or important enough, to merit a lawsuit that could cost millions of dollars? Litigation can result in large damage awards that justify the costs involved. It can also result in excluding a competitor from an important market, whereas a license might result in less of a revenue stream.
7. What are the potential damages that could be recovered from the potential infringer?

Enforcement Through Litigation

If a patentee decides to sue, the lawsuit will typically progress through the following phases, each of which is discussed below: (1) filing of the lawsuit, (2) fact and expert discovery, (3) claim construction; and (4) trial. Patent lawsuits rarely go to trial in under a year, and they often take several years to reach that point. The following sections go into more detail on the phases of litigation.

Filing of the Lawsuit.

The Patent Holder Files a Complaint. If a patent owner has a good faith belief that a competitor is infringing, the patent owner can enforce its patent rights in court. As explained in the section entitled "Introduction to the United States Patent System," patent suits are handled in the federal court system. To initiate a lawsuit in the federal court system, the patentee must file what is called a *Complaint*. The Complaint names the alleged infringer, identifies the patent(s) that are allegedly infringed, recites the allegedly infringing activity, and specifies the remedies that the patent holder seeks. Typically, the patent holder seeks payment of money damages and/or an injunction ordering the infringer to stop the infringing activity.

The patent holder may bring suit on one patent or several patents. For example, assume that the patent holder has a first patent covering a packaging material and a second patent covering packages made with the material. If a competitor is selling a product in a package made with the claimed packaging material, the patent holder could sue on both the material and the packaging patent. Furthermore, a patent holder can assert a patent even if it suspects that only some, but not all, of the claims are infringed; that is, a patent is infringed if there is infringement of a single claim.

The party filing suit is known as the *Plaintiff*, and the party being sued is known as the *Defendant*. Typically, but not always, the Plaintiff is the patent holder and the Defendant is the potential infringer.

The Alleged Infringer Files an Answer to the Complaint. After the Complaint is filed, the competitor files an *Answer*, which additionally includes *defenses*. These defenses usually include one or more of the following: noninfringement, invalidity, and/or unenforceability. The alleged infringer can assert as many defenses as applicable.

Evidence And Burdens. Discovery is the process through which the parties obtain information, known as *Evidence*, relevant to the case. The patent holder uses discovery to uncover details about the accused product or process to prove that infringement exists. Conversely, the alleged infringer uses discovery to uncover information relevant to invalidity or unenforceability defenses, such as information regarding how an invention was conceived or whether the inventors withheld material information from the USPTO during prosecution of the patent.

Such evidence, in the form of documents, testimony, and often expert opinion, is presented to the court to try to meet a party's burden of proof in the case. In patent litigation, the patent holder has the burden to prove infringement by a *preponderance of evidence*—that is, that there is more than a 50% likelihood that the allegedly infringing product uses the patented subject matter. This means that if neither the patent holder nor the alleged infringer provide any proof of infringement or non-infringement, there will be no infringement because the patent owner has not met its burden.

Similarly, the alleged infringer has the burden of proving defenses against infringement but, as explained above, does not have to prove noninfringement. With regard to proving invalidity and/or unenforceability, the alleged infringer must do so by *clear and convincing evidence*. This is a more difficult standard to satisfy than the preponderance of the evidence standard, because once a patent is issued by the USPTO, it is presumed valid.

Fact Discovery. During fact discovery, the parties request and exchange factual information related to the case. The *Federal Rules of Civil Procedure* ("the Rules"), which govern litigation in federal court, provide the following mechanisms for obtaining such factual information: document requests, interrogatories, requests for admission, and depositions. Fact discovery usually involves disclosing to the opposing party, a competitor, information that one would consider confidential. Typically the parties have the court enter a *Protective Order* that protects such information by governing who of the opposing party can see such confidential information, as well as what the receiving party can do with the information. In other words, the protective order is negotiated so that even though information is exchanged, the dissemination and use of confidential information can be restricted.

Document Requests. Each party is permitted to request documents from the opposing party to obtain evidence relevant to their allegations or defenses. These requests are called *Document Requests*. Each party is obligated to preserve and hand over documents that might prove relevant to the lawsuit. These include laboratory notebooks, meeting minutes, memoranda, financial data, advertising and marketing documents, flow diagrams, forecasts, organizational charts, invoices, consulting agreements, e-mails, and the like. The Rules require exchanging information maintained in paper form as well as in electronic form, and even electronic information that has been erased, where traces are accessible. Ultimately, the parties can exchange tens of thousands, hundreds of thousands, or even millions of pages of such documents. These documents are then reviewed by the respective parties to identify evidence to present to the court to prove infringement, invalidity, and so on.

Interrogatories and Requests for Admission. An *Interrogatory* is a question to the opposing party that the opposing party must answer. For example, an alleged infringer might propound interrogatories regarding how and when the inventors of a patent conceived their invention, or when the patent holder first showed prototypes of the invention to a customer. The patent holder must then make a good faith effort to obtain and provide an answer to the interrogatory. Likewise, the patent holder may present interrogatories to the alleged infringer asking for details about its process or products.

Requests for Admission are statements that the opposing party is asked to admit. Such admissions can reduce the issues for trial. For example, based on the review of documents produced in response to a document request, an alleged infringer might ask the patent holder to admit that its inventors had not conceived their invention by a given date. Once admitted, the alleged infringer would no longer have to prove (or present evidence regarding) the admitted fact at trial. Likewise, if the alleged infringer admits that its process uses a specific step(s), the patent holder will not need to separately prove this at trial when attempting to prove infringement.

Depositions. Typically after documents have been exchanged and reviewed, each side identifies individuals (i.e., witnesses) from the opponent's company for deposition. These often include the inventors, people with knowledge of the patent prosecution, people with knowledge of the accused products or processes, people knowledgeable about product costs and profit margins, and so on. During a deposition, the witness is required to answer questions from the opposing attorney. The attorney's questions and the deponent's answers are recorded by a stenographer and may also be videotaped. All questions are answered under oath, and the answers (subject to objections) can be used at trial for different purposes, including to impeach a witness' testimony if the witness' trial testimony differs from the witness' deposition testimony.

Fact depositions are used to gather fact evidence related to the issues in the case (infringement, validity, etc.). Fact depositions therefore address what actually happened with regard to the invention at issue, the allegedly infringing product, and other issues in the case. Questioning of the patent holder's witnesses often relates to how the patented process or product was developed, communications with the USPTO, and the content of relevant memoranda, reports, correspondence, e-mails, and so on. Questioning of the accused infringer often relates to (a) the details of accused products or processes and (b) the accused infringer's knowledge of the patents in suit.

Many scientists and engineers dread the idea of being deposed. Depositions represent an unfamiliar environment to most scientists and engineers, and many are anxious about how their performance will impact their company. To alleviate such anxiety and to prepare for the deposition, the witness will usually have a meeting with an attorney that will represent the witness at the deposition, also known as the attorney who defends the witness. During this meeting, the attorney can answer questions the witness has regarding depositions. In addition, the attorney will usually:

1. Explain the mechanics and rules of a deposition, such as the role of the witness, questioning attorney and defending attorney, the presence of a court reporter, and so on.
2. Review the issues in the litigation.
3. Discuss the witness' knowledge regarding the issues in the litigation.
4. Explain how the witness fits into the case.
5. Discuss questions and/or issues that will likely arise during the deposition.
6. Provide guidelines regarding how to answer questions, including telling the witness to listen to questions carefully, to answer only the question asked, and to tell the truth.

Adequacy of preparation for a deposition often correlates with how well a witness does do at deposition. Therefore, it is important to allow an appropriate amount of time for preparation. Often such preparation will last a day or more, depending on the anxiety level of the witness, how important the witness is to the case, and the amount of material to review.

Impact of Fact Discovery. As discovery proceeds, each party typically refines its litigation positions based on the discovery it obtains. For example, the alleged infringer might refine its defenses to include an unenforceability defense if it learned during discovery that one of the patent holder's inventors had information material to patentability that was not provided to the USPTO. Refinement can be based on uncovered documents, interrogatory responses, request for admission responses, and deposition answers.

In some cases, fact discovery can drain a company's resources. For example, key employees may have to spend days, or weeks, helping attorneys collect documents for production, helping attorneys respond to interrogatories and requests for admission, preparing for depositions, and being questioned as witnesses at depositions. Through the discovery process, opposing counsel will often find any "skeletons" that exist in relation to the litigation. The disruptive nature of litigation must therefore be weighed against the potential value of litigation before a patent owner asserts a patent.

Expert Discovery. Expert discovery follows fact discovery. During expert discovery, the parties work with experts in the field of the invention covered by the asserted patent(s). Experts can be university professors with expertise in the technology at issue, outside consultants, financial experts (to address, for example, damages issues), and the like.

Experts are retained to provide expert opinions regarding issues in the case. Unlike fact witnesses whose testimony is limited to what actually happened, experts can provide opinions and consider what would happen in various hypothetical circumstances. Experts typically rely on documents and other information exchanged by the parties during fact discovery. They may also conduct tests or find relevant scientific materials on their own. Thus, for example, a patent holder may hire an expert to submit a report providing opinions as to how the alleged infringer's product meets all of the limitations in its patent claims, supported by testing that the expert conducted. The alleged infringer may retain an expert to submit a report giving opinions regarding why the asserted patent claims are invalid.

After an expert submits an expert report on behalf of a party, the opposing party will usually take the expert's deposition. Such depositions are used to more fully understand the expert's opinions and to probe the bases for the opinions.

Claim Construction. At some point during litigation, the parties may have a hearing before the court to establish the meaning of the asserted claims, or, more particularly, specific terms within the asserted claims. This is known as a *claim construction hearing*. The claim construction hearing can happen during or after fact or expert discovery, or even as part of the trial. The result of a claim construction hearing often has a large impact on the litigation. For example, if a claim is construed narrowly, it might make it difficult for a patent owner to prove infringement. However, that same narrow construction might help the patent owner defend against an allegation of invalidity.

Trial. Many patent cases do not go to trial. One reason is that many patent cases settle before trial because of weaknesses in the parties' positions revealed during fact and/or expert discovery. Another reason is that cases may be resolved before trial if a party has proven to the judge that there are no issues of fact that have to be resolved at trial, thereby allowing the judge to rule without the need for a trial. However, if a case does not settle or end for some other reason, it will go to trial.

The trial is an opportunity for a judge and/or jury to see fact and expert witnesses testify and to assess their credibility. Indeed, many cases are won or lost based on whether the judge and/or jury believe a witness.

During trial, and even after the trial but before a decision has been rendered by the judge or jury, the parties can still settle the case. Again, such settlements occur because presentation of evidence at trial, or the performance of a witness at trial, may highlight a weakness in a party's position. If a case does not settle, a decision will be rendered. As explained in the section entitled "Introduction to the United States Patent System," such decisions can be appealed to the Federal Circuit and ultimately to the U.S. Supreme Court.

Acknowledgments: The authors appreciate the assistance of Ms. Victoria Elman in preparing the section entitled "The Interplay Between Patents and other Forms of Intellectual Property" and they also appreciate the helpful suggestions of Professor John R. Kettle III of Rutgers University School of Law—Newark.

BIBLIOGRAPHY

1. Intellectual Property Today, September 2006, p. 11 (Decisions & Settlements).
2. J. Simunovic, K. R. Swartzel, and E. Adles, U.S. Patent 7,213,967 (to North Carolina State University), 2007.
3. D. S. Chisum, C. A. Nard, H. F. Schwarz, P. Newman, and F. S. Kieff, *Principles of Patent Law: Cases and Materials,* 3rd edition, Foundation Press, New York, 2004, p. 19.
4. 35 U.S.C. § 101.
5. *Juicy Whip Inc. v. Orange Bang Inc.*, 185 F.3d 1364 (Fed. Cir. 1999).
6. 35 U.S.C. § 102.
7. *Continental Plastic Containers Inc. v. Owens-Brockway Plastic Products Inc.*, 141 F.3d 1073 (Fed. Cir. 1998).
8. 35 U.S.C. § 103.
9. *Union Carbide Corp. v. American Can Co.*, 724 F.2d 1567 (Fed. Cir. 1984).
10. 35 U.S.C. § 271.
11. 35 U.S.C. §§ 281, 283, 284
12. 35 U.S.C. § 282.
13. 37 C.F.R. § 1.56.
14. *Cargill Inc. v. Canbra Foods Ltd.*, 81 U.S.P.Q.2d 1705 (Fed. Cir. 2007).
15. *KSR International Co. v. Teleflex Inc.*, 127 S.Ct. 1727 (U.S. 2007).
16. *eBay Inc. v. MercExchange LLC*, 126 S.Ct. 1837 (U.S. 2006).
17. *MedImmune Inc. v. Genentech Inc.*, 127 S.Ct. 764 (U.S. 2007).
18. *Quanta Computer, Inc. v. LG Electronics, Inc.*, 06–937 (June 9, 2008).
19. B.A. Garner, *Black's Law Dictionary*, 7th edition, West Group, St. Paul, MN, 1999, p. 813.
20. 35 U.S.C. § 112.
21. 35 U.S.C. §§ 101, 102, 103, 112.
22. 35 U.S.C. § 154(d).
23. 35 U.S.C. § 171.

24. See http://www.thecoca-colacompany.com/presscenter/presskit_contour_bottle_time_line.html.
25. 15 U.S.C. § 1127.
26. See *In re Clarke*, 17 U.S.P.Q. 2d 1238 (T.T.A.B. 1990).
27. See, *Qualitex Co. v. Jacobson Products Co., Inc*. 514 U.S. 159, 1303 (1995).
28. J. T. McCarthy, *McCarthy on Trademarks and Unfair Competition Fourth Edition Vol. 2*, Thomson West, 2008, 11-1 to 11-210, 12-1 to 12-212.
29. *Grace & Co. v. Union Carbide Corp*., 581 F.Supp. 148 (S.D.N.Y. 1984).
30. *In re Serv-A-Portion, Inc.,* 1 U.S.P.Q.2d 1915 (T.T.A.B. 1986).
31. *In re Polytop*, 167 U.S.P.Q 383 (T.T.A.B. 1970).
32. 15 U.S.C. §§ 1058, 1059.
33. 17 U.S.C. § 102; A. R. Miller and M. H. Davis, *Intellectual Property: Patents, Trademarks, and Copyright*, 3rd edition, West Group, St. Paul, MN 2000, pp. 288–290; P. Goldstein and R. A.Reese, *Copyright, Patent Trademark and Related State Doctrines: Cases and Materials on the Law of Intellectual Property*, 6th edition, Foundation Press, New York, 1999, pp. 661–664.
34. *Kieselstein-Cord v. Accessories By Pearl, Inc*., 208 U.S.P.Q. 1 (2d Cir. 1980).
35. General information on copyrights is available at http://www.copyright.gov/. See also Copyright Basics at http://www.copyright.gov/circs/circ1.html.
36. *Oscar Mayer Foods Corp. v. Sara Lee Corp*., 15 U.S.P.Q.2d 1204 (W.D. Wisc. 1990).
37. *Del Monte Fresh Produce Co. v. Dole Food Co*., 59 U.S.P.Q. 2d (S.D. Fla. 2001).
38. See uspto.gov.
39. See, *for example., Crown Packaging Technology, Inc. v. Rexam Beverage Can Co*., 05-608MPT (D. Del. Jan. 22, 2008).
40. The USPTO assignment database can be accessed at http://assignments.uspto.gov/assignments/?db=pat.
41. The USPTO classification index can be accessed at http://www.uspto.gov/go/classification/uspcindex/indextouspc.htm
42. See *for example*, R. C. Farber, *Landis on Mechanics of Patent Claim Drafting*, 3rd edition, Practicing Law Institute, New York, 1990.
43. See, *for example, North American Container Inc. v. Plastipak Packaging Inc*., 415 F3d 1335 (Fed. Cir. 2005).

PERMEATION OF AROMAS AND SOLVENTS THROUGH POLYMERIC PACKAGING MATERIALS

DONGHWA CHUNG
Department of Marine Food
Science and Technology,
Kangnung-Wonju National
University, Gangneung,
Gangwong,
Republic of Korea

Mass transport in food and pharmaceutical package systems encompasses a number of phenomena referred to as either *permeation, adsorption*, or *migration*. Permeation includes the transfer of molecules from the product to the external environment through the package, or from the storage environment through the package to the product. Adsorption involves the takeup of molecules contained by the product into, but not through, the package, while migration is the passage of molecules originally contained by the package itself into the product. These mass transfer processes also provide the basis of further physiochemical activities within the package system. Such activities may induce physiochemical changes in the product, as well as physical damage of the package, or both (1). In a package/product system, the mass-transfer processes between product, package, and storage environment as well as the physiochemical activities associated with them are referred to as *product / package interactions* (2) (see Pharmaceutical packaging; Packaging, food).

The permeation of water vapor and gases, such as oxygen and carbon dioxide, has been extensively investigated for food and pharmaceutical package systems due to its significant effects on product shelf life. In the last decade, the overall concern on the mass transport in package systems has shifted a little more toward the transfer of volatile organic compounds of low molecular mass, such as aromas and solvents, due both to shelf-life reasons and to an incresing interest in safe and healthy food packaging. Aromas or flavors are one of the key attributes affecting the consumer acceptance of a packaged food. Their permeation through the package as well as their adsorption on the package, called flavor scalping, causes the loss of original sensorial characteristics of the product during storage, resulting in the reduction of product shelf life. Solvents, such as toluene, ethyl acetate, hexane, and abietic acid, are often contained in package materials, printing inks, or adhesive systems. Their migration into the packaged product not only changes the original sensorial properties of the product but also in some cases causes the generation of off-flavors that negatively alterate the consumer perception. In addition, the migrating solvents raise significant concerns about the toxicological safety of the product. Obviously, all these concerns are related to the product/package interactions. In this chapter, the permeation, rather than sorption or migration, of aromas and solvents has been discussed because the theory and experimental data on permeation can be expanded to understant the other processes.

The permeation process occurs in five consecutive steps, as schematically illustrated in Figure 1: (1) mass transfer from the bulk of phase 1 to the adjacent surface of package film, (2) sorption from the adjacent surface into package film, (3) molecular diffusion, (4) desorption from package film into the adjacent surface in contact with phase 2, and (5) mass transfer from the adjacent surface to the bulk of phase 2.

Since the molecular diffusion within package film is the rate-limiting step of the whole process, the rate of permeation can be described by Fick's law of diffusion. Under steady-state conditions, the flux (J) of permeant through the film is given by the following Fick's first law:

$$J = -D\,\frac{dc}{dx} \tag{1}$$

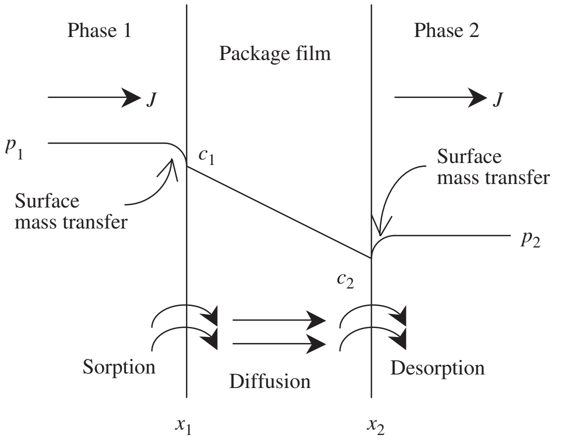

Figure 1. Schematic diagram of gas or vapor permeation through a package film.

where D is the diffusion coefficient of permenat in the film, c is the concentration of permeant in the film, and x is the distance in the film. Integration of equation (1) yields the following expression of J:

$$J = \frac{D}{l}\,\Delta c \tag{2}$$

where $l(=x_2-x_1)$ is the thickness of the film and $\Delta c(=c_1-c_2)$ is the difference in permeant concentration between the two surfaces of the film. Experimental determination of these surface concentrations is very difficult. Therefore, the surface concentration is necessary to be converted to the partial pressure (p) in bulk phase, which is easily measurable, using Henry's law of solubility:

$$c = Sp \tag{3}$$

where S is the solubility coefficient of permeant in the film. By substituting equation (3), equation (2) is rewritten as

$$J = \frac{DS}{l}\,\Delta p \tag{4}$$

where $\Delta p(=p_1-p_2)$ is the drop of partial pressure across the film. The product of D and S is often called permeability P, which is the most widely used coefficient for expressing the rate of packaging permeation:

$$P = DS \tag{5}$$

Another coefficient that has been frequently used is permeance R, which has a physical meaning similar to that of mass transfer coefficient:

$$R = \frac{DS}{l} \tag{6}$$

Substitution of equation (5) into equation (4) gives the following well-known packaging permeation equation:

$$J = \frac{P}{l}\,\Delta p \tag{7}$$

The gas flux J is often called the *permeant transmission rate*; and in the case of water vapor, the *water-vapor transmission rate* (WVTR) is commonly used.

The above equations are applicable only for situations where D is independent of permeant concentration and S follows Henry's law. However, when the permeation process involves highly interactive organic permeants such as aroma, flavor, or solvent molecules, the diffusion process is more complex than the diffusion of simple gases, and the diffusion coefficient may vary as a function of permeant concentration and time (3–6). Where D varies with time, the diffusion is often called *non-Fickian*. Mears (7) proposed the following expressions for cases where the diffusion coefficient is concentration-dependent:

$$D = D_0(1 + ac) \tag{8}$$

or

$$D = D_0 \exp(bc) \tag{9}$$

Equation (9) is more suitable in cases where the diffusion coefficient is strongly concentration-dependent. Here D is the differential diffusion coefficient, D_0 is the limiting diffusion coefficient, and a and b are constants.

The variables affecting permeation and diffusion processes in a package can be grouped as follows:

1. Compositional variables:
   a. Chemical composition of the polymer and permeant
   b. Morphology of the polymer
   c. Permeant characterstics
   d. Concentration of the permeant
   e. Presence of copermeant
2. Environmental and geometric factors
   a. Temperature
   b. Relative humidity
   c. Packaging geometry

While an in-depth treatment of each of the above factors is beyond the scope of this article, selected examples are discussed to illustrate their role in the transport of organic permeants in barrier polymers. For a more in-depth treatment, the reader is referred to the references listed in the Bibliography and references cited therein.

CHEMICAL COMPOSITION OF THE PACKAGING MATERIAL

The relationship between permeant transfer characteristics and the basic molecular structure and chemical composition of a polymer is rather complex, and a number of factors contribute to the permeation and diffusion processes; the most important are as follows:

- Cohesive-energy density, which produces strong intermolecular bonds, van der Waals or hydrogen bonds, and regular, periodic arrangement of such bonding groups.

- The glass-transition temperature (T_g) of the polymer, above which free vibrational motion and rotational motion of polymer chains occur, so that different chain conformations can be assumed.

With respect to the glass-transition temperature of barrier polymer structures, DeLassus (8) reported that glassy polymers have very low diffusion coefficients for flavor, aroma, and solvent molecules at low concentrations. Typically, these values are too low to measure by standard analytical procedures. The diffusion coefficient determines the dynamics of the permeation process and thus the time to reach steady state, which accounts for glassy polymers exhibiting high-barrier characteristics to organic permeants. Polyolefins, being well above their glass-transition temperature, are non-glassy polymers and have high diffusion coefficients for organic permeants, and steady-state permeation is established quickly in such structures.

Polymer-free volume is also a function of structural regularity, orientation, and cohesive-energy density. The aforementioned structure–property relationships all contribute to a decrease in solubility and diffusivity and thus permeability.

Salame (2) has proposed a relationship between polymer molecular structure and permeability based on an empirical constant (π), or “Permachor” constant, which, when substituted into the Permachor equation, predicts the gas permeability of polymer structures. The correlation parameter or the “Permachor” constant is based on the cohesive-energy density and free volume of the polymer, two major properties of the polymer. Agreement between the Permachor constant and film permeability has been shown to be quite good for oxygen, CO_2, and nitrogen, but not for water vapor and organic vapors.

The equation for relating gas permeability to the Permachor constant is as follows:

$$P = A\,\exp(-s\pi) \tag{10}$$

where A and s are constants for any given gas at temperature T and π is the Permachor constant of the polymer.

POLYMER MORPHOLOGY

Solid-state polymer chains can be found in a random arrangement to yield an amorphous structure or a highly ordered crystalline phase. Most polymers used in packaging are semicrystalline or amorphous materials (see Polymer properties).

Morphology refers to the physical state by which amorphous and semicrystalline regions coexist and relate to each other in a polymer, and it depends not only on its stereochemistry but also on whether the polymer has been oriented, on the conditions of temperature, strain rate, and cooling temperature, and on the melt cooling rate.

Fundamental properties that are associated with polymer morphology and will therefore influence the permeability and diffusivity characteristics of the polymer include:

- Structural regularity or chain symmetry, which can readily lead to a three-dimensional order or crystallinity. This is determined by the type of monomer(s) and the conditions of the polymerization reaction.
- Chain alignment or orientation, which allows laterally bonding groups to approach each other to the distance of the best interaction, enhancing the tendency to form crystalline materials.

Morphology is thus important in determining the barrier properties of semicrystalline polymers. This is illustrated by the results of permeation studies carried out on biaxially oriented polyethylene terephthalate (PET) films of varying thermomechanical history (9).

Film samples were biaxially stretched at a strain of 350%/s, based on the initial dimensions of 4 in. × 4 in., which corresponded to an orientation rate of 14 in./s biaxially.

The degree of orientation was 400% based on the initial dimensions. The orientation temperature was 90°C, 100°C, and 115°C, respectively.

Table 1 summarizes the results of permeation studies carried out with ethyl acetate in PET film biaxially oriented at 90°C and 115°C, respectively, and serves to illustrate the effect of thermomechanical history (stretching-temperature values) on the relative barrier properties of PET, for the permeation of ethyl acetate. The percent crystallinity of PET film oriented at 90°C was 22%, while the percent crystallinity of the film sample oriented at

Table 1. Permeability of Ethyl Acetate through PET Film Biaxially Oriented at 90°C and 115°C

Orientation Temperature (°C)	Vapor Activity (a_v)	Run Temperature (°C)	Permeability[a], $P \times 10^{20}$	Lag Diffusion Coefficient[b], $D \times 10^{12}$
90	0.59	30	2.6	1.8
	0.43	37	4.8	2.9
	0.21	54	15.4	11.0
115	0.59	30	0.014[c]	—
	0.21	54	3.6	5.3

[a] Permeability units are (kg · m) ($m^{-2} \cdot s^{-1} \cdot Pa^{-1}$).
[b] Diffusion coefficient units are $cm^2 \cdot s^{-1}$.
[c] No permeation after 550 h. Value of P reported represents an upper bound.

115°C was 31%. As shown, ethyl acetate permeability values decreased by approximately four times by increasing the film orientation temperature from 90°C to 115°C.

PERMEANT CHARACTERISTICS

The most important characteristics of the permeant affecting its transfer in and through a film include:

- Carbon chain length or boiling point
- Functional groups and polarity

With respect to the carbon chain length, different studies have been carried out to evaluate the influence of this characteristic on permeation phenomenon, particularly influencing the aforementioned second step of this process, that is, sorption. In particular, homologous series of hydrocarbons, esters, aldehydes, alcohols, and benzoates in the vapor phase were taken into consideration (10, 11). The obtained results showed that, in compounds below 10 carbon atoms, both the solubility and the permeability coefficients (*S* and *P*, respectively) of the volatiles increased two- to five-fold with each additional methylene group, depending on the types of packaging films. Obviously, diffusivity (*D*) decreased due to the steric hindrance. On the contrary, for molecules with 11 or more carbon atoms, the increments were less or negative, as in the case of aldehydes. Different experiments on the permeation of alkyl esters (C_5–C_{10}), methyl ketones (C_7–C_{10}), aldehydes (C_7–C_{10}), and sulfur compounds through different plastic films (PP, PE, PVDC, EVOH) led to similar results (12–16). Sorption into plastic films can take place also in the case of longer molecules as, for instance, fatty acids. A specific study (17) showed that these kinds of compounds with 16–18 carbon atoms moved through the LDPE film, with the final result of delaminating the composite (multilayer) flexible packaging film. Finally, carbon chain length and boiling point are strictly linked each other. For instance, within sorbates, there is a proportional relationship between boiling point and solubility. Moreover, a further relationship exists between the logarithm of the solubility coefficient and the boiling point of linear esters, alkanes, and ketones (e.g., hexyl butyrate, *n*-decane, or 3-octanone) through PVDC polymers (12–16).

The effect of functional groups on the transfer properties of aroma compounds through a film is much larger than the boiling point in the liquid phase rather than in the vapor phase, due to close interactions between molecules (10). Hydrocarbons and oxygenated terpenes, for example, did not over PP nor LDPE by permeation when put in aqueous model solutions (11). The polarity of the solutes can be effectively considered as the most important controlling factor to explain the tendency to permeation. Researchers pointed out that carvone ($C_{10}H_{14}O$) and limonene ($C_{10}H_{16}O$), even if similar terpenes, show different sorption and diffusion properties. In general, permeation of limonene (less polar than carvone), through plastic films, takes place quickly, because of lesser cohesive forces (11). In another study on the permeation of citrus oil compounds through polyolefins, it was found that terpenes (C_{10} carbon length) exhibited the highest affinity for the polymers, followed by sesquiterpenes (C_{15}) (18). In addition, the permeation of esters and aldehydes was more intense than alcohols due to polarity. Within aldehydes, those saturated showed a greater permeation compared to the unsaturated ones. For orange juice aromas, the following ranking was established in terms of affinity to LDPE: hydrocarbons > chetones > esters > aldehydes > alcohols (15, 16, 19). The same ranking can be extended to apple juice aromas associated with LDPE, LLDPE, PET, PA, and PP films (20). Another important factor influencing the permeation of flavor components into plastic films (in particular concerning the sorption step) is the pH of the system, which can modify the polarity of the permeant. The sorption of 2-hexanal into PE was found to be increased by a factor of 40 between pH 3.0 and pH 5.0 (21). Analogously, sorption of alcohols into LDPE was increased by lowering the pH up to 3.0 (19). Finally, sorption of limonene into LDPE at 22°C was higher at pH 5.2 than at pH 2.6 (1.3 times more; results significant at 95% level) (22).

CONCENTRATION DEPENDENCE OF THE TRANSPORT PROCESS

Permeance of limonene vapor through (1) oriented polypropylene, (2) saran-coated oriented polypropylene, (3) two-sided acrylic (heat-seal)-coated biaxially oriented polypropylene, and (4) one-side saran-coated, one-side acrylic-coated polypropylene film samples, as a function of permeant concentration, is presented graphically in Figure 2, where permeance (*R*) is plotted as a function of permeant concentration (23). The observed concentration dependency of the permeance values may be attributed to the permeant/polymer interaction, resulting in configurational changes and alteration of polymer-chain conformational mobility. Zobel (24) reported similar findings for the transport of the permeant benzyl acetate through coextruded oriented polypropylene and saran-coated oriented polypropylene, at various permeant concentrations.

PRESENCE OF COPERMEANT

As shown above, organic vapors are capable of exhibiting concentration-dependent mass transport processes. Therefore, the type and/or mixture of organic vapors permeating will determine the magnitude of sorption and permeation, as well as the effect of a copermeant on permeant permeability. The synergistic effect of a copermeant is illustrated by the results of permeation studies carried out on a biaxially oriented polypropylene film. The degree of film orientation was 430% (machine direction) and 800% (cross-machine direction), based on the initial dimensions. Binary mixtures of ethyl acetate and limonene of varying concentration were evaluated as the organic permeants (25).

Results of permeation studies for selected ethyl acetate/limonene binary vapor mixtures are presented in Figures 3 and 4, respectively. As shown in Figure 3 (ethyl

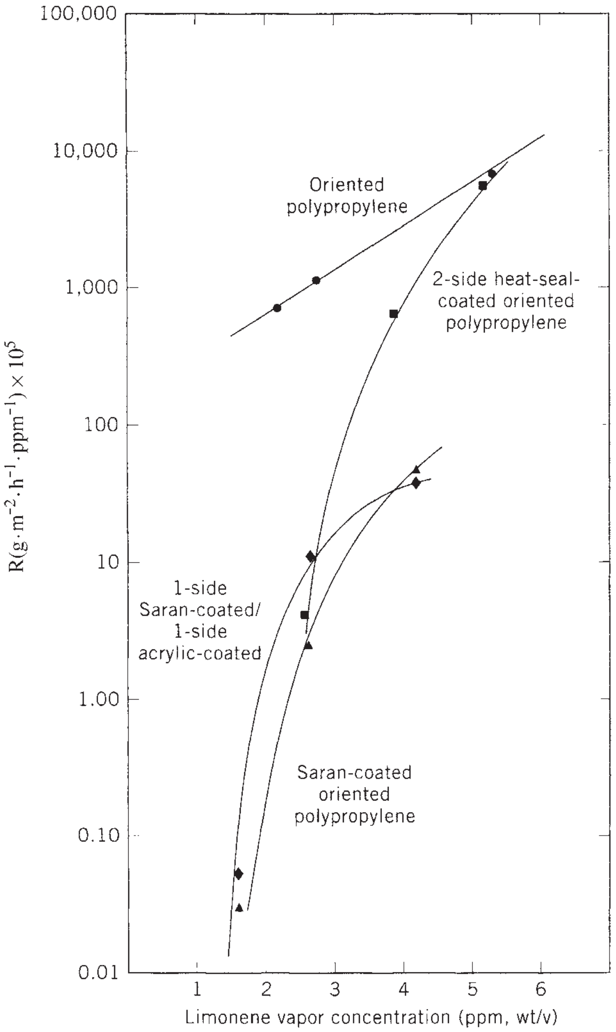

Figure 2. The effect of limonene-vapor concentration on log R for oriented polypropylene and coated oriented polypropylene structures (22° ± 1°C).

acetate $a_v = 0.10$ and limonene $a_v = 0.18$), limonene vapor had a significant effect on the transport properties of the copermeant. A 500% increase in the permeability constant of ethyl acetate was obtained, when compared to ethyl acetate vapor permeability alone, at similar test conditions. However, at this concentration level, ethyl acetate did not appear to influence the permeation of the limonene vapor. The transmission-rate profile curve for limonene vapor in the binary mixture is superimposed in Figure 3, to provide a complete description of the transmission characteristics of the mixed-vapor system.

For the ethyl acetate ($a_v = 0.1$)/limonene ($a_v = 0.29$) binary mixture, a permeation rate 40 times greater than the transmission rate of pure ethyl acetate vapor, of an equivalent concentration, was obtained. This is illustrated in Figure 4, where the transmission–profile plot of the binary mixture is presented, and compared to the transmission-rate profile curve for ethyl acetate vapor alone. Again, at this concentration level, ethyl acetate did not appear to affect the permeation characteristics of limonene vapor.

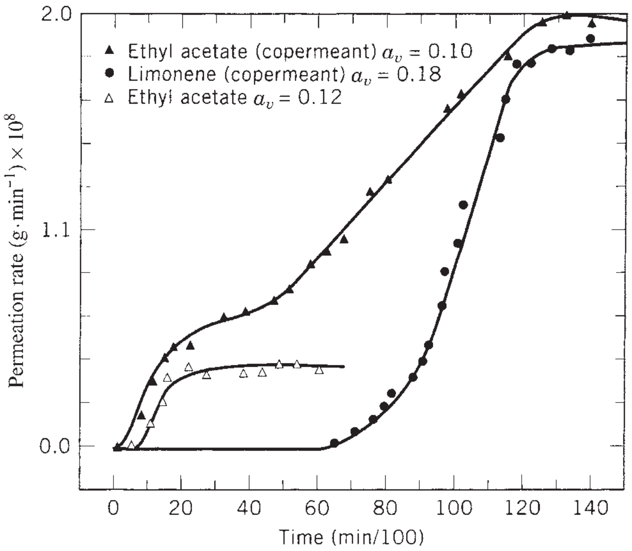

Figure 3. Comparison of the transmission profile of the binary mixture, ethyl acetate ($a_v = 0.1$)/limonene ($a_v = 0.18$), with the transmission profile of ethyl acetate ($a_v = 0.12$) through oriented polypropylene.

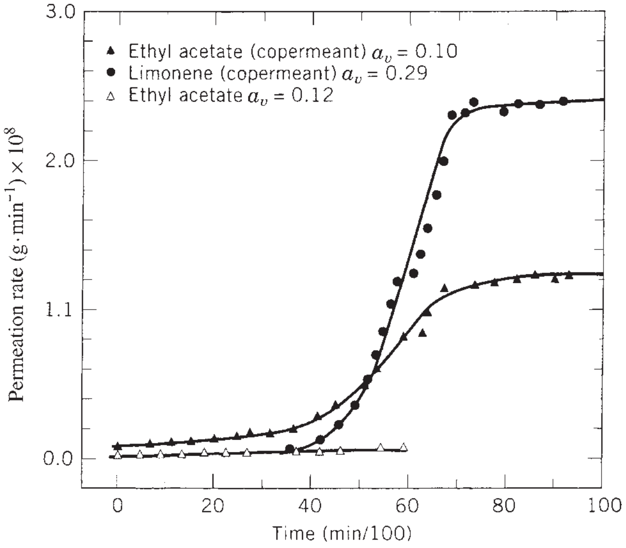

Figure 4. Comparison of the transmission profile of the binary mixture, ethyl acetate ($a_v = 0.1$)/limonene ($a_v = 0.29$), with the transmission profile of ethyl acetate ($a_v = 0.12$).

For studies carried out with the binary mixture of ethyl acetate $a_v = 0.48$ and limonene $a_v = 0.18$, the individual components of the mixture were found to have a significant effect on the permeation rates of the copermeant.

Since the permeability is drastically affected in the sorbate/polymer systems studied, the diffusion coefficient and/or the solubility coefficient must also vary in the presence of a copermeant to account for the observed increases in the transmission rates for the components of ethyl acetate/limonene binary mixtures. By direct measurement of the equilibrium solubility, Nielsen and Giacin

(26) found that the solubility coefficient values were independent of sorbate vapor activity, over the range of activity levels studied, and were not affected by the presence of a copermeant.

For the ethylacetate ($a_v = 0.10$)/limonene ($a_v = 0.21$) binary mixture, Hensley (25) reported a permeation rate of ethyl acetate 40 times greater than the transmission rate for pure ethyl acetate vapor of an equivalent concentration, while sorption studies showed the solubility coefficient of ethyl acetate to be constant and did not deviate from Henry's law in the presence of a copermeant. A possible explanation for the dramatic increase in the permeability coefficients for ethyl acetate in the presence of limonene as a copermeant lies with the high copermeant dependence of the diffusion coefficient.

For ethyl acetate/limonene binary mixtures, limonene as a copermeant appears to have little or no effect on the solubility of ethyl acetate in oriented polypropylene film, while significantly changing the inherent mobility of ethyl acetate within the polymer bulk phase. This accounts for the observed increase in the transmission rates for ethyl acetate through the OPP (oriented polypropylene) film in the presence of limonene.

While not fully understood, the proposed copermeant dependence of the diffusion coefficient may be due in part to copermeant-induced relaxation effects occurring within the polymer matrix. The absorption of organic vapors can result in polymer swelling and thus change the conformation of the polymer chains. These conformational changes are controlled by the retardation times of polymer chains. If these times are long, stresses may be set up that relax slowly. Thus, the absorption and diffusion of organic vapors can be accompanied by concentration as well as time-dependent processes within the polymer bulk phase, which are slower than the micro-Brownian motion of polymer chain segments that promote diffusion (7).

There is precedence in the literature in support of such long-time-period relaxation effects occurring in polymer films above their glass-transition temperature (27, 28). Thus, there may be copermeant-induced relaxation effects occurring during the diffusion of ethyl acetate/limonene binary mixtures in the oriented polypropylene film investigated. Such relaxation processes, which occur over a longer time scale than diffusion, may be related to a structural reordering of the free-volume elements in the polymer, thus providing additional sites of appropriate size and frequency of formation, which promote diffusion and account for the observed increase in the permeation rate of ethyl acetate in the presence of limonene as a copermeant.

EFFECT OF RELATIVE HUMIDITY

Table 2. Summary of Permeability Values of Acetone through Nylon 6I/6 T[a]

Temperature (°C)	$P \times 10^{19}$ (Dry Condition)[a]	$P \times 10^{19}$ (Humidified Conditions)[a]
60	3.7	4.9
75	6.5	11.2
85	9.8	17.6
95	11.8	—

[a] Permeability units are expressed in $(\mathrm{kg \cdot m})\ (\mathrm{m^{-2} \cdot s^{-1} \cdot Pa^{-1}})$.

The permeation of acetone vapor through amorphous polyamide (nylon 6I/6 T) under dry conditions and in the presence of a humid environment serves to illustrate the effect of water activity or moisture content on the barrier properties of hydrophilic polymer films. Studies were conducted at 60°C, 75°C, 85°C, and 95°C, at a constant permeant partial pressure value of 92 mm Hg (0.29 g/L). Water activity (a_w) of the permeant steam was maintained at 0.7 (70% RH), when measured at 23°C. Different film samples were used for dry- and humid-condition experiments. For an experiment, each run was maintained for a period of 8–14 days after attaining steady state, to ensure that the system was at equilibrium (29).

The respective permeability values are summarized in Table 2. As shown, sorption of water vapor resulted in an increase in permeability, as compared to dry conditions, with an increase of approximately 1.5 times being observed.

A further illustration of the effect of water activity on the barrier properties of polymer films is presented in Figure 5, where the total quantity of ethyl acetate permeated is plotted as a function of time, for the permeation of ethyl acetate through SiOx PET and EVAL-F films (30). The test conditions were as follows: temperature 22°C, 190 ppm (wt/v) concentration of ethyl acetate vapor, at 56% and 87% RH, respectively. Fluctuation of relative humidity was ±2%, and fluctuation of organic vapor concentration was ±5%.

For time, >500 h of continuous testing, there was no measurable permeation at 56% RH. The results indicate that both test films were excellent ethyl acetate vapor barriers at 56% RH and ambient temperature. However,

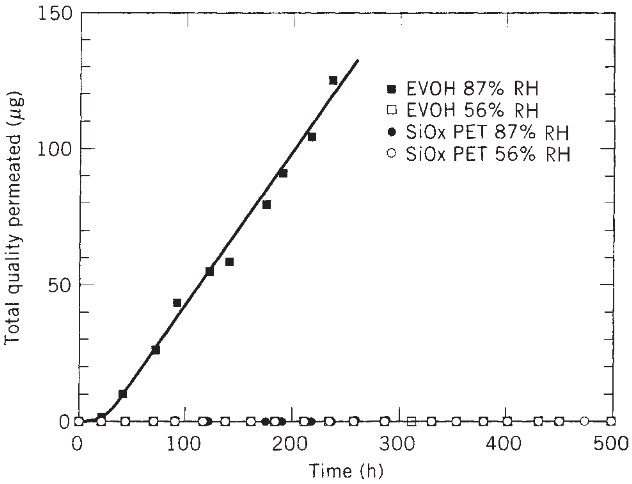

Figure 5. Transmission-rate profile curves of ethyl acetate vapor through SiO_x PET and EVAL-F films at 22°C, 190 ppm (wt/v), and 56% and 87% RH.

Table 3. The Effect of Relative Humidity on the Permeation of Ethyl Acetate Vapor through SiO_x PET and EVAL-F Films

Relative Humidity (%)	Sample	Permeance[a] $R \times 10^{17}$
56	SiO_x PET	<1.1
	EVAL-F	<2.2
87	SiO_x PET	<2.2
	EVAL-F	840±40

[a] Permeance units are expressed in $kg \cdot m^{-2} \cdot s^{-1} \cdot Pa^{-1}$.

as shown, at 87% RH the EVAL-F film had a significant increase in the permeation rate of ethyl acetate vapor, while the SiO_x PET film still showed no measurable increase in the rate of permeation. Table 3 summarizes the permeance values. Also presented in Table 3 are upper-limit-value estimations for film permeance.

Liu et al. (31) studied the effect of both water activity and permeant vapor concentration on the permeation of toluene vapor through a saran (PVDC)-coated OPP film. Studies were conducted at $22 \pm 1°C$. Since the film investigated in the present study is a multilayer structure, permeance values are presented to describe the barrier properties of the total structure.

The permeability parameters determined are summarized in Table 4.

A comparison of the permeance values for toluene, determined as a function of toluene vapor concentration and water activity, showed that the permeance values are highly dependent on both water-activity levels and toluene-vapor concentration. The findings suggested that the sorption of water vapor and/or toluene vapor leads to relaxation in the molecular structure of the saran barrier coating, resulting in a high concentration dependency of the permeance values. Toluene appears to be much more effective than water vapor in promoting relaxation of the saran coatings, since at the highest toluene-vapor concentration level studied (81 ppm), the permeance rate is independent of water-activity or sorbed-water levels. However, at the lower permeant concentration levels studied, the effect of sorbed water is quite significant, making this polymer structure very vulnerable to the permeation of low concentrations of toluene in the presence of sorbed water.

The results of this study also serve to illustrate the complex interrelationship of the barrier characteristics of the polymer film, permeant vapor activity, and sorbed-water concentration.

EFFECT OF TEMPERATURE ON PERMEATION PARAMETERS

Permeability, diffusion, and solubility coefficients follow a van't Hoff–Arrhenius relationship as given in equations (11–13):

$$P = P_0 \exp\left(\frac{-E_p}{R_c T}\right) \tag{11}$$

$$D = D_0 \exp\left(\frac{-E_D}{R_c T}\right) \tag{12}$$

$$S = S_0 \exp\left(\frac{\Delta H_s}{R_c T}\right) \tag{13}$$

where E_p = activation energy for permeation
E_D = activation energy for diffusion
ΔH_s = molar enthalpy of sorption
P_0, D_0, S_0 = constants
R_c = universal gas constant
T = absolute temperature

Lin (32) determined the permeability of ethyl acetate and toluene for the following commodity films: (*a*) oriented polypropylene, (*b*) high-density polyethylene, (*c*) glassine, (*d*) saran-coated oriented polypropylene, (*e*) acrylic-coated oriented polypropylene, and (*f*) metallized polyethylene terephthalate/OPP laminate.

Permeation studies were carried out at three temperatures to allow evaluation of the activation energies. For each temperature, three vapor activity levels were

Table 4. The Effect of Water Activity on the Permeation of Toluene Vapor through a Two-Side-PVDC Coated OPP Film

Toluene-Vapor Concentration (ppm) (Mass/Volume)	Toluene-Vapor Pressure (Pa)	Water Activity (a_w)	Transmission Rate[a,b] (J)	Permeance[a,c] (R)	Lag Time (h)
40	1203.8	0.50	0.73×10^{-13}	6.0×10^{-17}	94.0
		0.86	0.72×10^{-10}	6.0×10^{-14}	55.0
60	1778.2	0	0.4×10^{-11}	2.2×10^{-15}	82.0
		0.50	0.32×10^{-10}	1.8×10^{-14}	38.0
		0.86	1.6×10^{-10}	9×10^{-14}	29.0
81	2407.6	0	1.1×10^{-7}	1.6×10^{-11}	2.1
		0.50	1.1×10^{-9}	4.6×10^{-11}	2.2
		0.86	1.2×10^{-7}	5.0×10^{-11}	1.9

[a] Average of replicate runs, with a 2σ confidence limit within ±10%.
[b] Transmission rate units are expressed in $kg \cdot m^{-2} \cdot s^{-1}$.
[c] Permeance units are expressed in $kg \cdot m^{-2} \cdot s^{-1} \cdot Pa^{-1}$.

Table 5. Permeance of Ethyl Acetate through Oriented Polypropylene (OPP) as a Function of Vapor Activity and Temperature[a]

Vapor Activity[b]	Temperature (°C)	Permeance[c] $R \times 10^{12}$
0.095	30	0.6
	40	1.7
	50	4.4
0.21	30	0.7
	40	1.9
	50	4.4
0.41	30	0.9
	40	2.1
	50	4.8

[a] The results reported are the average of duplicate analyses.
[b] Vapor-activity values were determined at ambient temperature (24°C).
[c] Permeance units are expressed in $\mathrm{kg \cdot m^{-2} \cdot s^{-1} \cdot Pa^{-1}}$.

evaluated. Since several films investigated are multilayer or barrier-coated structures, permeance values are presented to describe the barrier properties of the total structure (see also Barrier polymers).

Permeance values determined at ethyl acetate vapor activity levels of $a_v = 0.095$, 0.21, and 0.41 for the respective barrier structures are summarized in Tables 5–9. For the metallized polyethylene terephthalate/OPP laminate, no measurable rate of diffusion was detected, following continuous testing for 44 h at 70°C and a vapor activity of $a = 0.41$.

Determined permeance values for toluene activity levels of $a_v = 0.067$, 0.22, and 0.44 for the respective barrier structures are summarized in Tables 10–14. There was no measurable rate of diffusion for the polyethylene

Table 6. Permeance of Ethyl Acetate through High-Density Polyethylene (HDPE) as a Function of Vapor Activity and Temperature[a]

Vapor Activity[b]	Temperature (°C)	Permeance[c] $R \times 10^{11}$
0.095	30	1.0
	40	1.7
	50	2.7
0.21	30	2.4
	40	2.8
	50	3.4
0.41	30	2.9
	40	3.8
	50	4.8

[a] The results reported are the average of duplicate analyses.
[b] Vapor-activity values were determined at ambient temperature (24°C).
[c] Permeance units are expressed in $\mathrm{kg \cdot m^{-2} \cdot s^{-1} \cdot Pa^{-1}}$.

Table 7. Permeance of Ethyl Acetate through Glassine as a Function of Vapor Activity and Temperature[a]

Vapor Activity[b]	Temperature (°C)	Permeance[c] $R \times 10^{12}$
0.095	23	1.1
	30	2.0
	40	4.2
0.21	23	2.3
	30	2.9
	40	5.2

[a] The results reported are the average of duplicate analyses.
[b] Vapor-activity values were determined at ambient temperature (24°C).
[c] Permeance units are expressed in $\mathrm{kg \cdot m^{-2} \cdot s^{-1} \cdot Pa^{-1}}$.

Table 8. Permeance of Ethyl Acetate through Saran-Coated OPP as a Function of Vapor Activity and Temperature[a]

Vapor Activity[b]	Temperature (°C)	Permeance[c] $R \times 10^{13}$
0.095	40	1.0
	50	5.0
	60	15.1
0.21	40	1.6
	50	5.2
	60	14.9
0.41	40	2.8
	50	7.7
	60	26.5

[a] The results reported are the average of duplicate analyses.
[b] Vapor-activity values were determined at ambient temperature (24°C).
[c] Permeance units are expressed in $\mathrm{kg \cdot m^{-2} \cdot s^{-1} \cdot Pa^{-1}}$.

Table 9. Permeance of Ethyl Acetate through Acrylic-Coated OPP as a Function of Vapor Activity and Temperature[a]

Vapor Activity[b]	Temperature (°C)	Permeance[c] $R \times 10^{12}$
0.095	50	0.25
	60	1.0
	70	2.6
0.21	50	0.3
	60	1.2
	70	3.6
0.41	50	0.3
	60	1.2
	70	3.3

[a] The results reported are the average of duplicate analyses.
[b] Vapor-activity values were determined at ambient temperature (24°C).
[c] Permeance units are expressed in $\mathrm{kg \cdot m^{-2} \cdot s^{-1} \cdot Pa^{-1}}$.

Table 10. Permeance of Toluene through OPP as a Function of Vapor Activity and Temperature[a]

Vapor Activity[b]	Temperature (°C)	Permeance[c] $R \times 10^{11}$
0.067	30	0.5
	40	1.15
	50	1.8
0.22	30	0.75
	40	1.4
	50	2.7
0.44	30	1.4
	40	2.0
	50	3.1

[a] The results reported are the average of duplicate analyses.
[b] Vapor-activity values were determined at ambient temperature (24°C).
[c] Permeance units are expressed in $\mathrm{kg \cdot m^{-2} \cdot s^{-1} \cdot Pa^{-1}}$.

Table 11. Permeance of Toluene through HDPE as a Function of Vapor Activity and Temperature[a]

Vapor Activity[b]	Temperature (°C)	Permeance[c] $R \times 10^{11}$
0.067	30	2.1
	40	3.4
	50	5.6
0.22	30	4.0
	40	5.5
	50	8.0
0.44	30	7.7
	40	8.6
	50	9.2

[a] The results reported are the average of duplicate analyses.
[b] Vapor-activity values were determined at ambient temperature (24°C).
[c] Permeance units are expressed in $\text{kg}\cdot\text{m}^{-2}\cdot\text{s}^{-1}\cdot\text{Pa}^{-1}$.

Table 12. Permeance of Toluene through Glassine as a Function of Vapor Activity and Temperature[a]

Vapor Activity[b]	Temperature (°C)	Permeance[c] $R \times 10^{12}$
0.067	30	2.8
	40	8.9
	50	5.1
0.22	30	3.5
	40	5.3
	50	6.6
0.44	30	4.1
	40	5.5
	50	6.8

[a] The results reported are the average of duplicate analyses.
[b] Vapor-activity values were determined at ambient temperature (24°C).
[c] Permeance units are expressed in $\text{kg}\cdot\text{m}^{-2}\cdot\text{s}^{-1}\cdot\text{Pa}^{-1}$.

terephthalate/OPP laminate structure following continuous testing for 44 h at 70°C and a vapor activity of 0.44.

From equation (11) the temperature dependency of the transport process associated with the respective barrier membranes, over the temperature range studied, was found to follow the Arrhenius relationship. From the slopes of the Arrhenius plots, the activation energy for the permeation process (E_p) was determined for the respective film samples, as a function of vapor activity. The determined activation energy values for both ethyl acetate and toluene are summarized in Tables 15, 16, respectively.

Table 13. Permeance of Toluene through Saran-Coated Oriented Polyethylene (Saran OPP) as a Function of Vapor Activity and Temperature[a]

Vapor Activity[b]	Temperature (°C)	Permeance[c] $R \times 10^{13}$
0.067	40	1.0
	50	5.8
	60	21.9
0.22	40	2.5
	50	9.7
	60	25.0
0.44	40	3.1
	50	12.8
	60	28.9

[a] The results reported are the average of duplicate analyses.
[b] Vapor-activity values were determined at ambient temperature (24°C).
[c] Permeance units are expressed in $\text{kg}\cdot\text{m}^{-2}\cdot\text{s}^{-1}\cdot\text{Pa}^{-1}$.

Table 14. Permeance of Toluene through Acrylic-Coated Polypropylene as a Function of Vapor Activity and Temperature[a]

Vapor Activity[b]	Temperature (°C)	Permeance[c] $R \times 10^{13}$
0.067	50	ND[d]
	60	ND[d]
	70	ND[d]
0.22	50	ND[d]
	60	ND[d]
	70	ND[d]
0.44	50	1.4
	60	2.0
	70	3.1

[a] The results reported are the average of duplicate analyses.
[b] Vapor-activity values were determined at ambient temperature (24°C).
[c] Permeance units are expressed in $\text{kg}\cdot\text{m}^{-2}\cdot\text{s}^{-1}\cdot\text{Pa}^{-1}$.
[d] Without detectable response after 44-h test.

Table 15. Activation-Energy Values for the Permeation of Ethyl Acetate through Polymer Membranes

	E_p ($\text{kcal}\cdot\text{mol}^{-1}$)		
Polymer Membranes	$a_v = 0.095$	$a_v = 0.21$	$a_v = 0.41$
OPP	17.7	14.6	14.5
HDPE	9.3	4.4	4.9
Glassine	14.6	9.6	N/A(a)
Saran OPP	24.9	23.0	24.5
Acrylic OPP	25.9	27.9	25.0

[a] N/A, data not available.

NUMERICAL CONSISTENCY OF PERMEATION DATA

In addition to determining the permeability values of organic permeants, it is also important to determine the diffusion coefficients and to evaluate the consistency of the experimental data obtained. The numerical consistency of

Table 16. Activation Energy Values for the Permeation of Toluene through Polymer Membranes

	E_p ($\text{kcal}\cdot\text{mol}^{-1}$)		
Polymer Membranes	$a_v = 0.067$	$a_v = 0.22$	$a_v = 0.44$
OPP	12.63	12.53	7.79
HDPE	9.45	6.90	1.90
Glassine	5.78	6.21	5.02
Saran OPP	34.00	34.10	35.41
Acrylic OPP	N/A[a]	N/A[a]	30.25

[a] N/A, data not available.

the permeation data will affect the values of both the diffusion coefficient and the permeability and would indicate any variations of the system parameters, such as temperature, or permeant concentration changes during the course of the permeation experiment. Gavara and Hernandez (33) have described a simple procedure for determining the diffusion coefficient and for performing a consistency analysis on a set of experimental permeation data from a continuous-flow permeation study. This procedure was applied to the continuous-flow permeation data obtained, to provide a better understanding of the mechanism of the diffusion and sorption processes associated with the permeation process. The consistency test for continuous-flow permeation experimental data has been described in detail by Gavara and Hernandez (33) and is summarized briefly below.

The value of the permeation rate at any time J_t, during the unsteady-state portion of the permeation experiment varies from zero, at time equal to zero, up to the transmission rate value (J_∞) reached at the steady state. This is described by the following expression (34):

$$\frac{J_t}{J_\infty} = \frac{4}{\pi^{1/2}}\left(\frac{\ell^2}{4Dt}\right)^{1/2} \sum_{n=1,3,5}^{\infty} \exp\left(\frac{-n^2\ell^2}{4Dt}\right) \tag{14}$$

Equation (14) is simplified to the following form:

$$\gamma = \left(\frac{4}{\pi^{1/2}}\right)(X)^{1/2}\exp(-X) \tag{15}$$

where γ is equal to the transmission rate ratio J_t/J_∞ and $X = \ell^2/4Dt$. In equation (14), D is assumed to be independent of permeant concentration and time. For each value of γ, a value of X can be calculated, and from a plot of $1/X$ versus t, the diffusion coefficient (D) can be determined. The authors further described two dimensionless constants, k_1 and k_2;

$$k_1 = \frac{t_{1/4}}{t_{3/4}} = \frac{X_{1/4}}{X_{3/4}} = 0.4405 \tag{16}$$

$$k_2 = \frac{t_{1/4}}{t_{1/2}} = \frac{X_{1/4}}{X_{1/2}} = 0.6681 \tag{17}$$

where $X_{1/4}$, $X_{1/2}$, and $X_{3/4}$ denote the numerical values of X when the permeation experiment has reached values of 0.25, 0.5 and 0.75, respectively, for γ, the transmission rate ratio.

The numerical values of the constants k_1 and k_2 as given in Equations (16) and (17), together with the linear relationship of $1/X$ versus t, will provide values of the diffusion coefficient and a criteria to evaluate the consistency of the experimental data.

The results of a series of permeation studies carried out with limonene vapor are presented graphically in Figures 6, 7, where the transmission rate is plotted as a function of time, and serves to illustrate the applicability of the consistency test to permeation data obtained for polyethylene and polypropylene (35). The values of k_1 and k_2 calculated from the experimental data and the associated diffusion coefficients, $D_{1/4}$, $D_{1/2}$, and $D_{3/4}$, obtained by substitution into the expressions

$$D_{1/4} = \frac{\ell^2}{4X_{1/4}t_{1/4}} \tag{18}$$

$$D_{1/2} = \frac{\ell^2}{4X_{1/2}t_{1/2}} \tag{19}$$

$$D_{3/4} = \frac{\ell^2}{4X_{3/4}t_{3/4}} \tag{20}$$

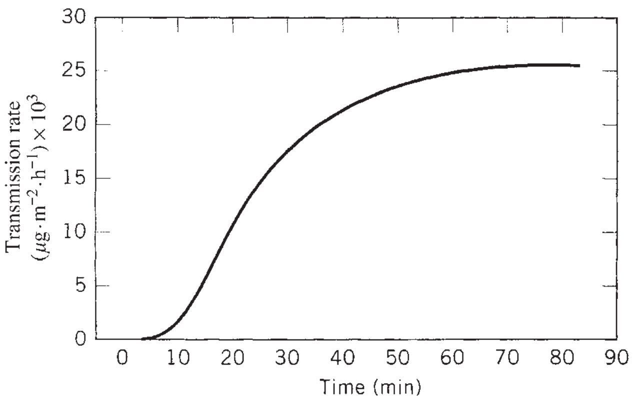

$t_{1/4}$ = 839 (s)
$t_{1/2}$ = 1260 (s)
$t_{3/4}$ = 1936 (s)
$k_1 = t_{1/4}/t_{3/4} = 0.4333$
$k_2 = t_{1/4}/t_{1/2} = 0.6659$
$D_{1/4} = \ell^2/(4\,X_{1/4}t_{1/4}) = 1.62 \times 10^{-13}\ m^2 \cdot s^{-1}$
$D_{1/2} = \ell^2/(4\,X_{1/4}t_{1/4}) = 1.62 \times 10^{-13}\ m^2 \cdot s^{-1}$
$D_{3/4} = \ell^2/(4\,X_{1/4}t_{1/4}) = 1.58 \times 10^{-13}\ m^2 \cdot s^{-1}$
average $D = 1.61 \times 10^{-13}\ m^2 \cdot s^{-1}$

Figure 6. Transmission-rate profile and consistency test for the permeation of limonene ($a_v = 0.4$) through high-density polyethylene at 50°C.

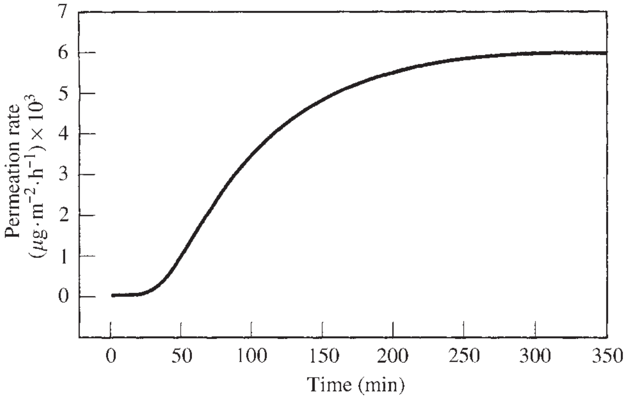

Figure 7. Transmission-rate profile and consistency test for the permeation of limonene ($a_v = 0.2$) through oriented polypropylene.

are also summarized in the respective transmission-rate profile plots. The values k_1 and k_2 calculated from the experimental data ranged within 4–14% of the theoretical values given by Gavara and Hernandez (33).

PERMEABILITY MEASUREMENT METHODS OF AROMAS AND SOLVENTS

The permeabilities of the permanent gases through different packaging materials are well known and deeply described elsewhere (36). They can be summarized by the following four major methods:

- Pressure increase method, a detailed description of which is given in the ASTM standard method D 1434 (37).
- Concentration increase method (also known as the isostatic method), related to the ASTM standard method D 3985 (38).
- Volume increase method. This technique is also described in the ASTM standard method D 1434 (39).
- Detector film method. This is a more recent method which requires little equipment and is both rapid and accurate (40).

Concerning aromas and organic vapors, unfortunately, not many data are available. Moreover, there are not accepted standard tests for the measurement and evaluation of aromas and organic vapors permeability. However, different methods and procedures related to the vapor permeability measurements can be recovered, including the isostatic and quasi-isostatic methods as seen before for the permeability studies of the permanent gases.

It is worth citing the sophisticated device developed by Niebergall et al. (41), able to provide accurate permeability values also at very low vapor levels. Zobel (24) built a simple equipment characterized by a higher sensitivity over vapor sampling methods due to the fact that the entire permeant is supplied to a specific detector, making it possible the measurements of permeation also at low vapor concentration gradients (in the low parts per million range). DeLaussus et al. (42) built an apparatus based on the use of a spectrometer to study the permeation phenomenon of aromas in polymer films, with the possibility to set the temperatures up to 150°C and relative humidities from 0% to 100%, allowing to achieve data on the aroma and odor permeation of materials used in retortable pouches. Finally, a procedure able to provide quantitative results on the aroma barrier property of different packaging materials has been developed (43). In this case, a permeation cell similar to that used for the concentration increase method is employed.

In recent years, several studies had been performed to develop new apparatuses for more effective and cheaper permeation test for aromas and organic vapors, with a wider application range than the previous ones. Al-Ati et al (44) developed an equipment based on a commercial TCD. The innovation involved in this new device is that it is able to detect permeants by measuring their thermal characteristics different with those of helium. Because helium is characterized by a low thermal capacity, nearly all volatile gases and vapors can be detected with this instrument. Moreover, this instrument provides not only permeability but also solubility and diffusion coefficients. Finally, it is claimed that this kind of apparatus can be built with an investment 10% less than a commercial instrument. Zhou et al. (45) constructed a system by combining dynamic vapor sorption (DVS) with purge-and-trap/fast gas chromatography (P&T-fGC). In particular, this apparatus can be used for simultaneous measurement of permeability of multiple aroma compounds. Simplicity, speed, and accuracy are some of the most interesting features of this new measurement system. Finally, a new quasi-isostatic permeation test method has been developed for aroma barrier testing by Vähä-Nissi et al. (46). In this case, aroma concentrations accumulated in the receiving cell as a function of time are measured during permeation from the source cell containing the model aroma solution through the tested polymer. This system uses automatic gas sampling from the test cells to the gas chromatography. It was successfully used to test different materials such as paper and paperboard (coated and uncoated) and polymer films. The main advantage linked to this new solution is represented by the absence of interfering carrier gas flows in the test cells. In fact, these flows could affect the final results, because the carrier gas can penetrate partly to porous materials such as fiber-based samples.

BIBLIOGRAPHY

1. B. R. Harte and J. R. Gray, *Food Product-Package Compatibility Proceedings,* Technomic Publishing, Lancaster, PA, 1983.
2. M. Salame, *J. Plast. Film Sheet.* **2**, 321 (1986).
3. E. Bagley and F. A. Long, *J. Am. Chem. Soc.* **77**, 2172 (1958).
4. J. Fujita, *Fortsch-Hochpolym-Forsch*. **3**, 1 (1961).
5. J. Crank, *The Mathematics of Diffusion,* 2nd edition, Clarendon Press, Oxford, UK, 1975.
6. A. R. Berens, *Polymer* **18**, 697 (1977).
7. P. Mears, J. Appl. *Polymer. Sci.* **9**, 917 (1965).
8. P. T. DeLassus, in *Proceedings TAPPI, 1993 Polymers, Laminations and Coatings Conference*, Chicago, 1993, p. 263.
9. R. J. Hernandez, J. R. Giacin, K. Jayaraman, and A. Shirakura, in *Proceedings ANTEC 90*, Dallas, 1990.
10. M. Shimoda, T. Matsui, and Y. Osajima, Nippon Shokuhin Kogyo Gakkaishi. **36**(6), 402–406 (1987).
11. G. W. Halek and J. P. Luttmann, in J. H. Hotchkiss, ed., *Food Packaging Interactions*, Vol. 2, ACS, Washington, DC, 1991, pp. 212–226.
12. G. Strandburg, P. T. DeLassus, and B. A. Howell in W. J. Koros ed., *Barrier Polymer Structure*, ACS, Washington, DC, 1990, pp. 333–350.
13. D. K. Arora, A. P. Hansen, and M. S. Armagost, in J. H. Hotchkiss ed., *Food Packaging Interactions*, Vol. 2, ACS, Washington, DC, 1991, pp. 203–211.
14. D. K. Arora, A. P. Hansen, and M. S. Armagost, *J. Food Sci.* **56**(5), 1421–1423 (1991).

15. J. P. H. Linssen, A. Verheul, J. P. Roozen, and M. A. Posthumus, *Int. Dairy J.* **1**(2), 33–40 (1991).
16. J. P. H. Linssen and J. P. Roozen, in M. Mathlouthi, ed., *Food Packaging and Preservation*, Blackie Academic & Professional, Glasgow, UK, 1994, pp. 48–61.
17. G. Pieper and K. Petersen, *J. Food Sci.* **60**(5), 1088–1091 (1995).
18. Z. N. Charara, J. W. Williams, R. H. Schmidt, and M. R. Marshall, *J. Food Sci.* **57**(4), 963–966, 972 (1992).
19. T. J. Nielsen, I. M. Jagerstad, and R. E. Oste, *J. Sci. Food Agric.* **60**(3), 377–381 (1992).
20. T. J. Nielsen, I. M. Jagerstad, R. E. Oste, and B. O. Wesslen, *J. Food Sci.* **57**(2), 490–492 (1992).
21. A. Leufven and C. Hermansson, *J. Sci. Food Agric.* **64**(1), 101–105 (1994).
22. P.-J. Blain, in *Memoire d'Ingenieur ENS.BANA*, Wageningen Agricultural University, The Netherlands, 1994. pp. 9–11.
23. J. R. Giacin and R. J. Hernandez, in *Proceedings of the Fall 1986 Meeting of Research and Development Associates for Military Food Packaging Systems, Inc.*, 1987, p. 79.
24. M. G. R. Zobel, *Polymer Test.* **3**, 133 (1982).
25. T. M. Hensley, J. R. Giacin, and R. J. Hernandez, in *Proceedings of IAPRI 7th World Conference on Packaging*, Utrecht, The Netherlands, 1991.
26. T. J. Nielsen and J. R. Giacin, *Packag. Technol. Sci.* **7**, 247 (1994).
27. A. R. Berens, *Polymer* **18**, 697 (1977).
28. D. A. Blackadder and J. S. Keniry, *J. Appl. Polym. Sci.* **17**, 351 (1973).
29. S. Nagaraj, *The Effect of Temperature and Sorbed Water on the Permeation of Acetone Vapor through Amorphous Polyamide Film*, M.S. thesis, Michigan State University, East Lansing, MI, 1991.
30. T. Sajaki and J. R. Giacin, *J. Plast. Film Sheet.* **9**(2), 97 (1993).
31. J. J. Liu, R. J. Hernandez, and J. R. Giacin, *J. Plast. Film Sheet.* **7**(1), 56 (1991).
32. C. H. Lin, Permeability of Organic Vapors through a Packaged Confectionery Product with a Cold Seal Closure: Theoretical and Practical Considerations, M.S. thesis, Michigan State University, East Lansing, MI, 1996.
33. R. Gavara and R. J. Hernandez, *J. Plast. Film Sheet.* **9**, 126 (1993).
34. R. S. Pasternak, J. F. Schimscheimer, and J. Heller, *J. Polym. Sci.* (Part A-2) **8**, 467 (1970).
35. S. J. Huang, *A Comparison of the Isostatic and Quasi-Isostatic Procedures for Evaluating the Organic Vapor Barrier Properties and Polymer Membranes*, M.S. thesis, Michigan State University, East Lansing, MI, 1996.
36. R. P. Brown, ed., *Handbook of Plastics Test Methods*, 2nd edition, George Godwin Ltd., Essex, England, 1981, Chapter 18.
37. ASTM D1434-82(2003). Standard Test Method for Determining Gas Permeability Characteristics of Plastic Film and Sheeting—Procedure M.
38. ASTM D3985-05. Standard Test Method for Oxygen Gas Transmission Rate through Plastic Film and Sheeting Using a Coulometric Sensor.
39. ASTM D1434-82(2003). Standard Test Method for Determining Gas Permeability Characteristics of Plastic Film and Sheeting—Procedure V.
40. R. V. Holland, M. L. Rooney, and R. A. Santangelo, *Angew. Makromol. Chem.* **88**, 209 (1980).
41. H. Niebergall, A. Humeid, and W. Blochl, *Lebensm.-Wiss. U. Technol.* **11**, 1 (1978).
42. P. T. DeLaussus, G. Strandburg, and B. A. Howell, *Tappi J.* **71**, 177 (1988).
43. E. Hatzidimitriu, S. G. Gilbert, and G. Loukakis, *J. Food Sci.* **52**, 472 (1987).
44. T. Al-Ati, J. Garza, and J. H. Hotchkiss, *Packag. Technol. Sci.* **16**, 249-257 (2003).
45. Q. Zhou, B. Guthrie, and K. R. Cadwallader, *Packag. Technol. Sci.* **17**, 175-185 (2004).
46. M.Vähä-Nissi, T. Hjelt, M. Jokio, R. Kokkonen, J. Kukkonen, and A. Mikkelson, *Packag. Technol. Sci.* **21**, 425–431 (2008). DOI: 10.1002/ pts.791.

PHARMACEUTICAL PACKAGING

M. I. R. M. Santoro
A. K. Singh
Department of Pharmacy,
Faculty of Pharmaceutical
Sciences, University of São
Paulo, São Paulo, Brazil

INTRODUCTION

The packaging of a pharmaceutical product fulfills assorted roles, such as product presentation, identification, convenience, and protection until administration or use. Selection of packaging requires a basic knowledge of packaging materials, the environmental conditions to which the product will be exposed, and the characteristics of the drug formulation. Several types of packaging are used to contain and protect the drug product, such as the primary packaging around the product and secondary packaging such as subsequent transit cases (1).

Packaging system development, including primary and secondary packaging components, is as important as drug product itself. Basically, the packaging material is used as a barrier to protect the drug product against external factors that can degrade them and consequently decrease their efficacy and even provoke toxic effects. The material should be selected based on the characteristics of drug product and type of dosage form. After the production phase, packaging must be planned according to regulatory requirements and its quality should be controlled according to predefined specifications.

Once the type of packaging material is selected based on factors such as size, shape, capacity, and physicochemical properties, all these data, including quality control (QC) tests, should be included in the specification of the products in order to ensure the therapeutic effectiveness during its shelf life.

Several types of materials are being used in the manufacture of containers and closure systems: glass, plastics, metals, and combinations of these materials. However, care should be taken in the selection of appropriate material. These materials should not present any physical or chemical reactivity that could modify drug activity, quality, purity, or physical characteristics of the drug substance and drug product. Any minor modification in the pharmacopeial specification is acceptable if it does not present a threat to patient's health.

The role of packaging in the pharmaceutical industry has grown substantially over the past decade. The total packaging operation is part of any drug development program. Drug product require a standard of packaging which is superior to that of most other products (nonpharmaceutical) in order to support and comply with their main requirements, such as efficacy, integrity, purity, safety, and stability. For these reasons, packaging technology should be based on detailed information on drug substance and drug product, including their physical and chemical properties.

In the past, packaging concerns often arose only during the later steps of product development. Today, packaging is integral part of drug product development and is among the earliest considerations of new drug product being studied. Few examples of packaging concerns for common classes of drug products are presented in Table 1. However, the challenge is to maintain low packaging cost that is always integrated into the cost of the product itself.

Packaging in the post-World War II period benefited immensely from the commercialization of plastics, which were little known or used in prior years. Since then, the packaging industry has openly adopted plastics as a powerful new tool in the development of new packaging forms and functions.

Quality control of a packaging component starts at the design stage. All aspects of package development that may generate quality problems must be identified and minimized by good design. Identifying and correcting in packaging will avoid product recall and rejection of drug product (2–4).

The aim of this article is to discuss the importance of the packaging in the development of drug products and pharmaceuticals.

IMPORTANCE OF PROPER PACKAGING AND LABELING

The United States' Poison Prevention Packaging Act enacted in 1970 (www.cpsc.gov/businfo/pppa.html) requires special packaging of most human oral prescription drugs, oral controlled drugs, certain normal prescription drugs, certain dietary supplements, and many over-the-counter (OTC) drug preparations in order to protect the public from personal injury or illness from misuse of these preparations.

In many countries there are very strict regulations for packaging of many drug substances. Various types of child-resistant packages are covered in ASTM International Standard D-3475. Medication errors linked to poor labeling and packaging can be controlled through the use of error potential analysis. The recognition that a drug name, label, or package may constitute a hazard to safety typically occurs after the drug has been approved for use and is being marketed. Numerous reports of medication errors are being reported, some of which have resulted in patient injury or death. In a number of these reports, a medication was mistakenly administered either because the drug container (bag, ampoule, prefilled syringe, and bottle) was similar in appearance to the intended medication's container or because the packages had similar labeling. Obviously, the severity of such errors depends largely on the medication administered. The problem of medical errors associated with the naming, labeling, and packaging of pharmaceuticals is being very much discussed.

PACKAGING MATERIALS

General Considerations

Packaging refers to all the operations, including filing and labeling, through which a bulk product should pass to become a finished product. Usually, sterile filing is not considered part of the packaging process, although the bulk product is still in the primary container.

Table 1. Examples of Packaging Concerns for Common Classes of Drug Products (2, 4)

Degree of Concern Associated with the Route of Administration	Likelihood of Packaging Component–Drug Product Interaction		
	High	Medium	Low
Highest	Inhalation aerosols and solutions; injection; injectable suspensions	Sterile powders and powders for injections and inhalation powders	
High	Ophthalmic solutions and suspensions; transdermal ointments and patches; nasal aerosols and sprays		
Low	Topical solutions and suspensions; topical and lingual aerosols; oral solutions and suspensions	Topical powders; oral powders	Oral tablets and oral (hard and soft gelatin) capsules

A packaging component means any single part of a container closure system. Typical components are containers (e.g., ampoules, vials, bottles), container liners (e.g., tube liners), closures (e.g., screw caps, stoppers), closure liners, stopper over seals, container inner seals, administration ports [e.g., on large-volume parenterals (LVPs)], overwraps, administration accessories, and container labels (4).

A primary packaging component is one that is or may be in direct contact with the drug product. A secondary packaging component is one that is not and will not be in direct contact with the drug product (4).

A container closure system refers to the sum of packaging components that together contain and protect the drug product. This includes primary packaging components and secondary packaging components, if the latter are intended to provide additional protection to the drug product. A packaging system is equivalent to a container closure system (4).

The role of packaging material on the overall perceived and actual stability of the drug product is well established. Packaging plays an important role in quality maintenance, and the resistance of packaging materials to moisture and light can significantly affect the stability of drugs and their drug products. It is crucial that stability testing of drug products in their final packaging be performed. The primary role of packaging, other than its esthetic one, is to protect the drug products from moisture and oxygen present in the atmosphere, light, and other types of exposure, especially if these factors affect the overall quality of the product on long-term storage (5).

Compliance packaging such as for fixed-dose-combination pills and unit-of-use packaging is a therapy-related interventions that is designed so as to simplify medication regimens and thus potentially improve adherence. Compliance packaging can be defined as a prepackaged unit and provides one treatment cycle of the medication to both the pharmacist and the patient in a ready-to-use package. This innovation type of packaging is usually based on blister packaging using unit-of-one dosing. The separate dosage units and separate days are usually indicated on the dosage cards to help remind the patient when and how much of the medication to take, for example, blister-packed oral dosage forms with drug information leaflets, specifically the contraceptive pills (3, 6, 7).

The selection of packaging material for any pharmaceutical product is as important as proper drug product. To guarantee the safe and adequate delivery of drug product to the patient and improve patient compliance, the manufacturer should consider the following factors:

1. Compatibility and safety concerns raised by the route of administration of the drug product and the nature of the dosage form (e.g., solid or liquid based)
2. Kinds of protection the container closure system should provide to the drug product (e.g., photosensitive, hygroscopic, easily oxidized drug products)
3. Potential effect of any treatment or handling that may be unique to the drug product in the packaging system
4. Patient compliance to the treatment and ease of drug administration
5. Safety, efficacy, and quality of drug product throughout its shelf life

Glass as Packaging Material

A packaging system found acceptable for one drug product is not automatically assumed to be appropriate for another. Each application should contain enough information to show that each proposed container closure system and its components are suitable for its intended use.

Non Sterile Products.

Solids. Some topical drug products such as powders may be considered for marketing in glass bottles with appropriate dispenser. These topical drug products may be sterile and could be subject to microbial limits.

The most common glass-packed solid oral dosage forms is oral powders and granules for reconstitution. A typical solid oral dosage forms container closure system is a glass bottle (although plastic bottles are also used) with a screw-on or snap-off closure. A typical closure consists of a metal cap, often with a liner, and frequently with an inner seal.

Powders for oral administration that are reconstituted in their market container, need not be sterile; however, they have an additional possibility of an interaction between the packaging components and the reconstituting fluid. Although the contact time will be relatively short when compared to the component/dosage form contact time for liquid-based oral dosage forms, it should still be taken into consideration when the compatibility and safety of the container closure system is being evaluated.

Nonsolids. For nonsterile products the preservative provides some protection, but continual microbial challenge will diminish the efficacy of the preservative, and spoilage or disease transmission may occur (8).

Antimicrobial preservatives such as phenylmercuric acetate are known to partition into rubbers during storage, thus reducing the formulation concentration below effective antimicrobial levels (9). A complication of modern packaging is the need for the application of security seals to protect against deliberate adulteration and maintain consumer confidence.

Sterile Products. The sterile dosage forms share the common attributes that they are generally solutions, emulsions, or suspensions and are all required to be sterile. Injectable dosage forms represent one of the highest-risk drug products (Table 1). Any contaminants present (as a result of contact with a packaging component or due to the packaging system's failure to provide adequate protection) can be rapidly and completely introduced into the patient's general circulation. Injectable drug products may be liquids in the form of solutions, emulsions, suspensions, or dry solids that are to be combined with an appropriate vehicle to yield a solution or suspension.

Although ophthalmic drug products can be considered topical products, they have been grouped here with injectables because they are required to be sterile and the descriptive, suitability, and quality control information is typically the same as that for an injectable drug product.

The potential effects of packaging component/dosage form interactions are numerous. Hemolytic effects may result from a decrease in tonicity, and pyrogenic effects may result from the presence of impurities. The potency of the drug product or concentration of the antimicrobial preservatives may decrease due to adsorption or absorption.

A cosolvent system essential to the solubilization of a poorly soluble drug can also serve as a potent extractant of plastic additives.

A disposable syringe may be made of plastic, glass, rubber, and metal components, and such multicomponent construction provides a potential for interaction that is greater than when a container consists of a single material.

Injectable drug products require protection from microbial contamination (loss of sterility or added bioburden) and may also need to be protected from light or exposure to gases (e.g., oxygen).

Performance of a syringe is usually addressed by establishing (a) the force to initiate and maintain plunger movement down the barrel and (b) the capability of the syringe to deliver the labeled amount of the drug product.

Solids. For solids that must be dissolved or dispersed in an appropriate diluent before being injected, the diluent may be in the same container closure system (e.g., a two-part vial) or be part of the same market package (e.g., a kit containing a vial of diluent).

Sterile powders or powders for injection may need to be protected from exposure to water vapor. For elastomeric components, data showing that a component meets the requirements of USP Elastomeric Closures for Injections will typically be considered sufficient evidence of safety.

Nonsolids. The package must prevent the entry of organisms; for example, packaging of sterile products must be absolutely microorganism-proof, hence the continued use of glass ampules. Liquid injections are classified as small-volume parenterals (SVPs), if they have a solution volume of 100 mL or less, or as large-volume parenterals (LVPs), if the solution volume exceeds 100 mL (8). Liquid-based injectables may need to be protected from solvent loss.

A SVP may be packaged in a vial or an ampule. A LVP may be packaged in a vial, in a glass bottle, or, in some cases, as a disposable syringe. Packaging material for vials and ampules are usually composed of Type I or II glass. Stoppers and septa in cartridges and vials are typically composed of elastomeric materials.

Pharmaceuticals may interact with packaging and containers, resulting in the loss of drug substances by adsorption onto and absorption into container components and the incorporation of container components into pharmaceuticals. Diazepam in intravenous fluid containers and administration sets exhibited a loss during storage due to adsorption onto glass (3).

Glass surfaces are also known to adsorb drug substances. Chloroquine solutions in glass containers decreased in concentration owing to adsorption of the drug onto the glass (3).

Rubber closures are also known to absorb materials, including drugs. Absorption of preservatives such as chlorocresol into the rubber closures of injectable formulations has been studied extensively (3).

Water permeability of rubber closures used in injection vials is considered an important parameter in assessing the closures, but quantitative prediction of water permeability through rubber closures is difficult because the diffusion coefficient of water is dependent on relative humidity (3).

Liquid-based oral drug products are usually dispensed in glass bottle (sometimes in plastic), often with a screw cap with a liner, and possibly with a tamper-resistant seal or an overcap that is welded to the bottle. The same cap liners and inner seals are sometimes used with solid oral dosage forms. A laminated material could be used to overwrap glass bottles for extra safety.

The USP grade glass packaging components are chemical-resistant and could be considered sufficient evidence of safety and compatibility. In some cases (e.g., for some chelating agents), a glass packaging component may need to meet additional criteria to ensure the absence of significant interactions between the packaging component and the dosage form.

Several ophthalmic preparations are commercialized in glass containers. Although the risk factors associated with ophthalmic preparations are generally considered to be lower than for injectables, any potential for causing harm to the eyes demands caution.

A large-volume intraocular solution (for irrigation) may be packaged in a polyolefin (polyethylene and/or polypropylene) container.

The liquid-based oral dosage forms may be marketed in multiple-unit bottles. The dosage form may be used as is or admixed first with a compatible diluent or dispersant. Liquid-based oral drug products in glass containers must meet the requirements of USP containers. Glass containers are accepted as sufficient evidence of safety and compatibility. Performance is typically not a factor for liquid-based oral drug products but should be considered while treating pressurized liquid-based oral drug products (e.g., elixir spray).

Topical dosage forms such as unpressurized sprays, lotions, ointments, solutions, and suspensions may be considered for marketing in glass bottles with appropriate dispensers. Some topical drug products, especially ophthalmic, are sterile or may be subject to microbial limits. In these cases, packaging material and its handling should be done in the same manner as those for injectables.

Plastic as Packaging Material

For plastic components, data from USP biological reactivity tests will typically be considered sufficient evidence of safety. Whenever possible, the extraction studies should be performed using the drug product. If the extraction properties of the drug product vehicle may reasonably be expected to differ from that of water (e.g., due to high or

Table 2. Plastic Additives (6)

Type	Purpose	Examples
Lubricants	Improves processibility	Stearic acid paraffin waxes, PE waxes
Stablizers	Retard degradation	Epoxy compounds, organotins, mixed metals
Plasticizers	Enhance flexibility, resiliency, melt flow	Phthalates
Antioxidants	Prevent oxidative degradation	Hindered phenolics (BHT), aromatic amines, thioesters, phosphites
Antistatic agents	Minimize surface static charge	Quaternary ammonium compounds
Slip agents	Minimize coefficient of friction, especially polyolefins	
Dyes, pigments	Color additives	

low pH or due to a solubilizing excipient), then drug product should be used as the extracting medium. If the drug substance significantly affects extraction characteristics, it may be necessary to perform the extractions using the drug product vehicle. If the total of extracts significantly exceeds the amount obtained from water extraction, then an extraction profile should be obtained. It may be advisable to obtain a quantitative extraction profile of an elastomeric or plastic packaging component and to compare this periodically to the profile from a new batch of the packaging component. Extractables should be identified whenever possible (Table 2 and 3).

Nonsterile Products.

Solids. The most common solid oral dosage forms are capsules and tablets. A typical solid oral dosage forms container closure system is a plastic, usually high-density polyethylene (HDPE) bottle with a screw-on or snap-off closure and a flexible packaging system, such as a pouch or a blister package. A typical closure consists of a cap, often with a liner and frequently with an inner seal. If used, fillers, desiccants, and other absorbent materials are considered primary packaging components.

A change in the selection of packaging materials combined with a change in storage conditions or conditions during administration of the drug products may provoke stability problems.

Many studies have been conducted on predicting the role of packaging in moisture adsorption by drug products. Adsorption of moisture by tablets contained in polypropylene films was successfully modeled from storage temperature and the difference in water vapor pressure between the inside and outside of the packaging (3).

Chemical and physical degradation of packaged drug products caused by moisture adsorption has been predicted from the moisture permeability of the packaging. For example, strength changes of lactose-corn starch tablets in strip packaging and discoloration of sugar-coated tablets of ascorbic acid were predicted using the moisture permeability coefficient of the packaging.

Typical flexible forms of packaging containing solid oral dosage forms are the blister package and the pouch. A blister package usually consists of a lidding material and a forming film. The lidding material is usually a laminate that includes a barrier layer (e.g., aluminum foil) with a print primer on one side and a sealing agent (e.g., a heat-sealing lacquer) on the other side.

The sealing agent contacts the dosage form and the forming film. The forming film may be a single film, a coated film, or a laminate. A pouch typically consists of film or laminate that is sealed at the edges by heat or adhesive.

Solid oral dosage forms generally need to be protected from the potential adverse affects of following:

1. Water vapor (e.g., moisture may affect the decomposition rate of the active drug substance or the dissolution rate of the drug product)
2. Incident light (e.g., in case of photosensitive products)
3. Reactive gases (e.g., oxygen could provoke oxidative reactions)

The packaging material should be carefully studied and tailor-made to help protect the drug product. For example, photosensitive drug product may be blister-packed in dark polymeric film, and the covering lid on

Table 3. Parenteral Drug Administration Devices (6)

Sterile Device	Plastic Material
Containers for blood products	Polyvinyl chloride
Disposable syringes	Polycarbonate, polyethylene, polypropylene
Irrigating solution containers	Polyethylene, polypropylene, polyvinyl chloride
I.V. infusion fluid containers	Polyethylene, polypropylene, polyvinyl chloride
Administration sets	Nylon (spike), polyvinyl chloride (tubing), polymethylmethacrylate (needle adapter), polypropylene (clamp)
Catheter	Teflon, polypropylene, thermoplastic elastomers

the opposite side may be made of aluminum to give protection against incident light.. A blister packaging using multilayered HDPE packaging material and selection of adequate sealing technique may help prevent moisture access into the blister system. However, adequacy of plastics and glass for packaging of solid oral dosage forms and for powders for reconstitution should meet the requirements of the USP containers test.

Incorporating oxygen adsorbents such as iron powder in packaging units can reduce the effect of oxygen. Protection from light can be achieved using primary packaging (packaging that is in direct contact with the dosage forms) and secondary packaging made of light-resistant materials.

The photochemical reaction is a very complex process; many variables may be involved in the photolytic degradation kinetics. The velocity of the photochemical reaction may be affected not only by the light source, intensity, and wavelength of the light, but also by the size, shape, composition, and color of the container.

Great effort is taken to stabilize a formulation in such a way that the shelf life becomes independent on the storage conditions. Photostability of drugs and excipients should be evaluated at the formulation development stage in order to assess the effects of packaging on the stability of the final product. Molsidomine tablet preparations in inadequate primary container (blister) without secondary when exposed to irradiations may produce morpholine. These results illustrate the importance of packaging for the stability of molsidomine (3).

Three standard tests for water vapor permeation have been established by the USP for use with solid oral dosage forms.

1. Polyethylene containers (USP <661>) (8)
2. Single-unit containers and unit-dose containers for capsules and tablets (USP <671>)
3. Multiple-unit containers for capsules and tablets (USP <671>) (8)

The cotton and rayon used as filler in solid oral dosage forms containers may not meet pharmacopeial standards, but through appropriate tests and acceptance criteria for identification and for moisture content, their adequacy should be shown; for example, rayon has been found to be a potential source of dissolution problems for gelatin capsules and gelatin-coated tablets.

Desiccants are often used to eliminate moisture in packaging when the moisture resistance of the packaging itself is not sufficient to prevent exposure. The utility of desiccants has been assessed based on a sorption–desorption moisture transfer model (3).

The desiccant or other absorbent materials are primary packaging components. The component should differ in shape and/or size from the tablets or capsules with which it is packaged. Their composition should be provided, their inertness should be proved through appropriate tests, and acceptance criteria should be established.

A topical powder product may be marketed in a sifter-top container made of flexible plastic tubes or as a part of a sterile dressing (e.g., antibacterial product). The topical formulations in a collapsible tube can be constructed from low-density polyethylene (LDPE), with or without a laminated material. Normally, there is no product contact with the cap on storage. Thus usually there is no cap liner, especially in collapsible polypropylene screw caps. Normally, separate applicator devices are made from LDPE. Product contact is possible if the applicator is part of the closure, and therefore an applicator's compatibility with the drug product should be established, as appropriate (e.g., vaginal applicators).

Nonsolids. Typical liquid-based oral dosage forms are elixirs, emulsions, extracts, fluid extracts, solutions, gels, syrups, spirits, tinctures, aromatic waters, and suspensions. These products are usually nonsterile but typically need to be protected from solvent loss, microbial contamination, and, sometimes, exposure to light or reactive gases (e.g., oxygen).

The presence of a liquid phase implies a significant potential for the transfer of materials from a packaging component into the dosage form.

The higher viscosity of semisolid dosage forms and transdermal systems may cause the rate of migration of leachable substances into these drug products to be slower than for aqueous solutions. Due to extended contact, the amount of leachables in these drug products may depend more on a leachable material's affinity for the liquid–semisolid phase than on the rate of migration.

In addition to adsorption onto and absorption into containers, transfer of container components into pharmaceuticals may affect the perceived stability/quality of drug products. Adsorption of volatile components from rubber closures onto freeze-dried parenterals during both dosage form processing and storage brought about haze formation upon reconstitution. Leaching of dioctyl phthalate, a plasticizer used especially in PVC plastics, into intravenous solutions containing surfactants was observed. Plastics contain additives to enhance polymer performance. PVC may contain phthalate diester plasticizer, which can leach into infusion fluids from packaging (3).

The liquid-based oral dosage forms may be marketed in multiple-unit bottles or in unit-dose or single-use pouches or cups. The dosage form may be used as is or admixed first with a compatible diluent or dispersant. A liquid-based oral drug pouch may be a single-layer plastic or a laminated material. The pouches may use an overwrap, which is usually a laminated material.

For LDPE components, data from USP container tests are typically considered sufficient evidence of compatibility. The USP general chapters do not specifically address safety for polyethylene (HDPE or LDPE), polypropylene (PP), or laminate components.

For liquid-based oral drug products that the patient will continue to take for an extended period (i.e., months or years), during which time he or she is expected to extract greater amounts of substances from plastic packaging components than water (presence of cosolvents), additional extractable information may be needed to address safety issues.

Topical dosage forms such as creams, emulsions, gels, lotions, ointments, pastes, and powders may be marketed in plastic materials. Topical dosage formulations are for local (not systemic) effect and are generally applied to the skin or oral mucosal surfaces. Some vaginal and rectal creams, as well as nasal and ophthalmic solutions, may be considered for topical drug products.

A rigid bottle, a collapsible tube, or a flexible pouch made of plastic material may be used for liquid-based topical product. These preparations are marketed in a single- or multiple-unit container. Dissolved drug (or any substance, e.g., benzocaine) may diffuse in the suppository base, and can, for instance, partition into polyethylene linings of the suppository wrap.

Topical delivery systems are self-contained, discrete dosage forms that are designed to deliver drug for an extended period via intact skin or body surface (e.g., transdermal, ocular, and intrauterine).

These systems may be constructed of a plastic or polymeric material loaded with active ingredients or a coated metal. Each of these systems is generally marketed in a single-unit soft blister pack or a preformed tray with a preformed cover or overwrap.

Compatibility and safety for topical delivery systems are addressed in the same manner as for topical drug products. Performance and quality control should be addressed for the rate-controlling membrane (Table 2 and 3).

Sterile Products.

Nonsolids. An SVP may be packaged in a disposable cartridge, a disposable syringe, or a flexible bag made of polymeric plastic. Flexible bags are typically constructed with multilayered plastic.

An LVP may be packaged in a vial, a flexible bag, or, in some cases, a disposable syringe. Packaging material for cartridges, syringes, vials, and ampules are usually composed of polypropylene.

Stoppers and septa in cartridges, as well as syringes, are typically composed of elastomeric materials. An overwrap may be used with flexible bags to retard solvent loss and to protect the flexible packaging system from rough handling.

Diazepam in intravenous fluid containers and administration sets exhibited a loss during storage due to adsorption onto and absorption into plastics. Absorption of clomethiazole edisylate and thiopental sodium into PVC infusion bags was observed (3).

The pH dependence of adsorption/absorption of acidic drug substances such as warfarin and thiopental and basic drug substances such as chlorpromazine and diltiazem indicates that only the un-ionized form of the drug substance is adsorbed onto or absorbed into PVC infusion bags (3).

The absorption was correlated to the octanol–water partition coefficients of the drugs, suggesting that prediction of absorption from partition data is possible. Polymers such as Nylon-6 (polycaprolactam) are known to adsorb drug substances such as benzocaine (3).

The ophthalmic drug products are usually solutions marketed in a low-density polyethylene bottle with a dropper built into the neck. A few solution products use a glass container due to stability concerns regarding plastic packaging components.

Metal as Packaging Material

Metal tubes constructed of single material are packaging material of choice for topical dosage forms and may be tested readily for stability with a product. Tubes with a coating, however, present additional problems. The inertness of coating material must be established through adequate tests and guarantee that it completely covers underlying material. The coating material must be resistant to creaking, leaking, leaching and solvent erosion; for example, frequently used aluminum tubes have demonstrated reactivity with fatty alcohol emulsions, mercurial compounds, and preparations with pH below 6.5 and above 8.0. Nonreactive epoxy linings have been found to make aluminum tubes resistant to attack (6).

The ophthalmic ointments are marketed in a metal tube with an ophthalmic tip. Ophthalmic ointments that are reactive toward metal may be packaged in a tube lined with an epoxy or vinyl plastic coating.

Metal containers, pressurized or not, may also be used for topical drug products. topical dosage forms such as aerosols, emulsions, gels, powders, and solutions may be marketed in metallic flasks, pressurized or not. Topical dosage formulations are for local (not systemic) effect and are generally applied to the skin or oral mucosal surfaces. Some preparations for topical use, such as vaginal and rectal creams, as well as nasal and otic sprays, may be considered for marketing in metallic containers.

A number of topical products marketed as a pressurized aerosol may be dispensed in a metallic bottle with a screw cap. Topical dosage forms in aluminum tubes usually include a liner. A tube liner is frequently a lacquer or shellac whose composition should be stated. A metallic pressurized packaging system for a liquid-based topical product may deter solvent loss and may provide protection from light when appropriate.

The droplet size of topical aerosols spray does not need to be carefully controlled, nor is the dose usually metered as in case of inhalers. The spray may be used to apply dosage form to the skin (topical aerosol) or mouth (lingual aerosol), and functionality of the sprayer should be addressed. The drug product has no contact with cap and short-term contact with nozzle. A topical aerosol may be sterile or may conform to acceptance criteria for microbial limits. However, physical stability of aerosols can lead to changes in total drug delivered per dose and total number of doses that may be obtained from the container.

QUALITY CONTROL OF PACKAGING MATERIAL

The acquisition, handling, and QC of primary and secondary packaging materials and of printed materials should be accomplished in the same way as that for the raw materials. The printed materials should be stocked in a reserved place so the possibility of unauthorized access is avoided. The labels and other rejected printed materials should be stored and transported with proper identification and before adequate destruction procedure.

The identification affixed on the containers, on the equipment, in the facilities, and on the product containers should be clear, without ambiguity, and in a format approved by the company and contain the necessary data. Besides the text, differentiated colors indicating its condition could be used (e.g., in quarantine, approved, rejected, and cleaned).

The packaging materials should attend to the specifications, giving emphasis to the compatibility of the same with the drug product that it contains. The material should be examined with relation to visible physical and critical defects as well as the required specifications.

Several regulatory agencies as well as private agencies [Food and Drug Administration (FDA), United States Pharmacopeia (USP), World Health Organization (WHO), British Pharmacopoeia (BP)] (4, 8–10) have issued guidelines on the safety evaluation of materials and container closure systems. However, the ultimate proof of safety and suitability of a container closure system and the packaging process is established by full shelf life stability studies. An important step in such evaluations is characterization of the packaging materials and the chemicals that can migrate or extract from container closure system components to the drug product. This extractable material belongs to diverse chemical classes that can migrate from polymeric materials, such as antioxidants, contaminants, lubricants, monomers, plasticizers, and preservatives. Such basic information is critical to understanding the biological safety and suitability of a container.

Establishing the safety of container closure systems is of key importance to the medical and pharmaceutical industries (Table 1). It is no less important than the contents themselves. The FDA's document "Guidance on Container Closure Systems for Packaging Human Drugs and Biologics" makes this point clear (4).

While the tests and methods described in Table 4 allow one to provide data that the container closure system is suitable for its intended use, an application must also describe the QC measures that will be used to ensure consistency in the packaging components (11).

UPDATING ON PACKAGING MATERIALS: FUTURE DEVELOPMENTS

Within the last 20 years, computer simulations of materials have evolved from an academic curiosity to a predictive tool for addressing structure–property–processing–performance relations that are critical to the design of new products and processes.

The computational prediction of physical properties is particularly challenging for polymeric material, because of the extremely broad spectra of length and time scales governing structure and molecular motion in these materials. In a recent paper, Theodoro (12) discuss the fundamental underpinnings and presents applications of new methods and algorithms for the hierarchical modeling of polymers. It was discussed that quantitative relations can be established between structure, properties, processing, and performance of materials.

New packaging materials are being developed. A translucent PVC alloy having a satin look and soft touch was designed for use in the cosmetic industry (13). Meneghetti and Qutubuddin (14) studied and presented the synthesis, thermal properties, and applications of polymer–clay nanocomposites, with potential applications in film packaging and gas storage.

In every aseptic filling application, the sterile transfer of goods into the aseptic area is a challenge, and there are many different ways to do it. Thus, different types of sterilization of packaging materials are being studied and published (15–17).

Photostabilization of drugs substance in drug products without protection from packaging materials was studied by Thoma and Klimek (18), proving that when enwrapped by the packaging material, the drug product is normally well protected from the influence of photodegradation. Tveit et al. (19) presented a study in which they evaluated

Table 4. Properties of Suitability Concerns and Interactions (3, 11)

Attributes	Concerns and Interactions	Proposed Methods
Protection	Exposure to light, moisture, microbial ingress, and oxidation from presence of oxygen	USP<661> Light transmission and water vapor permeation, container integrity (microbial ingress, dye penetration, helium leak)
Compatibility	Leachable induced degradation; absorption or adsorption of drug, precipitation, change in pH, discoloration, brittleness of packaging materials	Leachability study (migration of chemicals into drug product) using LC/MS, GC/MS, ICP/AA, pH, appearance of drug and container, thermal analysis (DSC, TGA), and IR
Safety	No leached harmful or undesirable amounts of substances to expose patients treated with drug	Extraction study (USP physicochemical test—plastics), USP elastomeric closures for injections, Toxicological Evaluation, USP Biological Reactivity and complies with CFR, additives and purity
Performance	Container closure system functionality, drug delivery	Functionality (improved patient compliance or use), delivery (transfer dose in right amount or rate)

Abbreviations: DSC, differencial scanning calorimetry; TGA, thermal gravimetric analysis; AA, atomic absorption.

general patient tolerance to Omnipaque® 350 mgI/mL supplied in polypropylene containers compared to that of same product supplied in routinely used glass vials, with emphasis on allergy-like adverse events. This kind of research proves the importance of packaging material used to protect the pharmaceutical preparations.

A simple and rapid HPLC method for determination of di-2-ethylhexyl- phthalate (DEHP) the major plasticizer of most PVC materials was proposed by Aignasse *et al*. (20). Some practical pharmaceutical applications are presented in order to demonstrate the reliability of the proposed method for this determination of DEHP in PVC packaging, as well as for traces of DEHP leached on infusion bags.

During the past 20 years, research interest in the use of natural biopolymers for the manufacture of "green" biodegradable materials, such as films and coatings, has greatly increased. This is to overcome environmental problems associated with the use of synthetic petroleum polymers (21). As new biodegradable polymers and their packaging applications are emerging, there is a need to address their environmental performance. In particular, there is a need to understand the time required for their complete degradation, before these materials are deployed in commercial composting processes (22). For this reason, in some countries the substitution of plastic products with paper products is being suggested (23).

The recycling of either model polymers or waste products based on low-density polyethylene (LDPE), high-density polyethylene (HDPE), or polypropylene (PP), as well as pyrolysis, was studied by Achilias et al. (24) using the dissolution/reprecipitation method.

In demand for "green" packaging and consumer goods applications, chemical and pharmaceutical industries are introducing new families of all-natural colorants and additives for use in these environmental friendly polymers (25).

Biomimetics is a field of science that investigates biological structures and processes for their use as models for the development of artificial systems. Biomimetic approaches have considerable potential in the development on new high-performance materials with low environmental impact. The cell walls of different plant species represent complex and highly sophisticated composite materials that can provide inspiration on how to design and fabricate lightweight materials with unique properties. Such materials can provide environmentally compatible solutions in advanced packaging, electronic devices, vehicles, and sports equipment (26).

BIBLIOGRAPHY

1. J. P. Griffin and J. O′Grady, ed., *The Textbook of Pharmaceutical Medicine*, 5th edition, Blackwell Publishing Inc., Oxford, UK, 2006, p. 880.
2. K. Harburn, *Quality Control of Packaging Materials in the Pharmaceutical Industry*, Marcel Dekker, New York, 1990, p. 196.
3. M. I. R. M. Santoro and A. K. Singh, "*Packaging and Labeling*" in S. C. Gad, editor-in-chief, *Pharmaceutical Manufacturing Handbook: Production and Processes*, John Wiley & Sons, Hoboken, NJ, 2007, pp. 159–200.
4. U.S. Food and Drug Administration (FDA), *Guidance on Container Closure System for Packaging Human Drugs and Biologics*, U.S. Department of Health and Human Services, FDA, Washington, D.C., 1999.
5. S. Yoshioka, *Stability of Drugs and Dosage Forms*, Kluwer Academic Publishers, New York, NY, 2000, p. 272.
6. G. S. Banker and C. T. Rhodes, *Modern Pharmaceutics*, 4th edition, Marcel Dekker, New York, 2002, p. 1222.
7. J. Connor, N. Rafter, and A. Rodgers, *Bull. World Health Org*. **82**, 935–939 (2004).
8. *United States Pharmacopeia*, 31st edition, United States Pharmacopeial Convention, Rockville, MD, Vol. 1, 2008, pp. 248–260.
9. World Health Organization (WHO), The International Pharmacopeia, *Tests and General Requirements for Dosage Forms: Quality Specifications for Pharmaceutical Substances* and *Tablets*, 3rd edition, Vol. 5, WHO, Geneva, 2003, p. 371.
10. *British Pharmacopoeia*, Her Majesty's Stationery Office, London, UK, 2002.
11. D. E. Albert, *Pharm. Med. Packag. News*, **3**, 76–78 (2004).
12. D. N. Theodoro, *Chem. Eng. Sci*. **62**, 5697–5714 (2007).
13. Solvay Benvic, *Plastics Additives and Compounding* **3**, 13 (2001).
14. P. Meneghetti and S. Qutubuddin, *Thermochim. Acta* **442**, 74–77 (2006).
15. T. Sadat and T. Huber, *Radiat. Phys. Chem*. **63**, 587–589 (2002).
16. M. Haji-Saied, M. H. O. Sampa, and A. G. Chmielewski, *Radiat. Phys. Chem*. **76**, 1535–1541 (2007).
17. F. Reymondon, B. Pellet and E. Marcon, *Int. J. Prod. Econ*., 112, 326–335 (2008).
18. K. Thoma and R. Klimek, *Int. J. Pharm*. **67**, 169–175 (1991).
19. K. Tveit, A. N. Dardenne, R. Svihus, J. Fairhurst, G. Jenssen, L. Lemaitre, J. Grellet, D. Brekke, and K. Skinnningsrud, *Clin. Radiol*. **50**, 44–48 (1995).
20. M. F. Aignasse, P. Prognon, M. Stachowicz, R. Gheyouche, and D. Pradeau, *Int. J. Pharm*. **113**, 241–246 (1995).
21. J. L. Audic, F. Fourcade, and B. Chaufer, *Biodegradable Material Obtained from Renewable Resource: Plasticized Sodium Caseinate Films in Thermodynamics, Solubility and Environmental Issues*, Elsevier Science, The Netherlands, 2007, pp. 369–382.
22. G. Kale, R. Auras, S. P. Singh, and R. Narayan, *Polym. Test*. **26**, 1049–1061 (2007).
23. C. C. Chen, *Environ. Int*. **32,** 478–486 (2006).
24. D. S. Achilias, C. Roupakias, P. Megalokonomos, A. A. Lappas, and E. V. Antonakou, *J. Hazard. Mater.* **149**, 536–542 (2007).
25. *Additives for Polymers*; Clariant Masterbatches Division, (2007), pp. 2–3.
26. T. T. Teeri, H. Brumer III, G. Daniel, and P. Gatenholm, *Tr. Biotech*. **25**, 299–306 (2007).

POINT OF PURCHASE PACKAGING

Jennifer Griffin
Polaroid Corp., Cambridge,
Massachusetts

Point-of-purchase (POP) packaging materials play an important role in marketing efforts of consumer product companies. Displays, fixtures, signs, and related materials at the retail store represent POP, packaging. Food, drug, specialty, and convenience stores, as well as mass merchandisers and warehouse clubs, all make use of POP packaging. The medium is used in almost every category of product from health and beauty aids to household appliances. POP materials are used to increase sales, obtain positioning on the retail floor, and carry the brand name and strategy along with related advertising efforts.

HIGH VISIBILITY VERSUS POP PACKAGING

A distinction can be made between the primary package that is considered highly visible and the packaging that is considered POP. Both forms of packaging are an important promotional medium, especially in self-service stores. However, POP packaging is different from high-visibility packaging, because in most cases, it consists of the promotional materials that surround the primary package. For most consumers, POP packaging implies that the product is new to the market, is offered at a sale price, or comes with another promotional tie-in (1). High-visibility packaging includes blister, clamshell, and skin packaging, as well as packages with windows (see Blister packaging; Carded packaging). These forms of primary packaging display the product's benefits, and they promote impulse purchases. Often, retailers request product manufacturers to replace the standard primary package with a high-visibility package for two reasons: (*1*) sales assistance is not available to help with customer purchase decisions so the package needs to sell itself, and (*2*) they request the high-visibility package to have better pilfer resistance than the standard package. Despite the distinction between the two types of packaging, the lines between primary packaging and POP packaging have blurred, and the diversity of POP allows for exceptions. Primary packaging can also function as a point-of-purchase device as observed in Figure 1. These two camera boxes function as the primary package and also as an informational sales tool. Retailers leave these boxes in the open position on a countertop for the customer to read about product features of the professional cameras. The bleached-white, laminated, E-flute, die-cut, corrugated box is designed in the style of a counter display (see Board, corrugated; Diecutting). Extra lithographic printing surfaces are available for the selling message as a result of the double wall hinge cover, double sidewalls, double front wall, and the interior shelf-style panel for a clean, finished appearance (see Lithography; Offset printing).

MATERIALS

Because POP packaging is so varied, material selection is based on the intended duration of the promotion. POP is commonly defined as either temporary or permanent. In general, temporary displays are used until the product is depleted, or for less than 6 months. Permanent displays have an intended length of use for more than 6 months. A third category called *semipermanent* often marries packaging materials used in both of the categories to give the display an extended shelf life over temporary displays. The most widely used material in temporary exhibits is corrugated board. Paperboard is also popular (see Paperboard). Permanent display construction makes use of extruded plastic sheet fabrications, plastic profile and tubing, plastic molding, wire, metal extrusions, foamboard, or wood. To create semipermanent displays, corrugated board can be used with more durable materials such as wood, plastic, or metal. Solid fibreboard (see Boxes, solid-fiber) or corrugated board of heavy construction could also be used alone. Figure 2 shows a temporary counter display made of bleached-white, corrugated board on the left. The permanent counter display on the right is an extruded plastic sheet fabrication.

Figure 1. A primary package functions as a point-of-purchase device.

Figure 2. A temporary corrugated-board counter display (*left*) and a permanent counter display made of extruded plastic sheet (*right*).

TEMPORARY POP CATEGORIES

Common Elements of Counter and Floor Stands. The most widely used display styles for temporary promotions are counter and floor-stand displays. Both styles share commonly used structural design elements. The most visual element that these two styles share is the header portion (also called the riser panel) of the display. The header is a display panel that protrudes up from the open side of the display box to advertise the contained product. The header often comes attached to the body of the display as a hinged-cover panel with a front tuck flap. The header folds back for setup. It may also arrive as a separate piece that slides into a slot on the body. The most popular manufacturing technique for header cards is to preprint a lithographic sheet and glue it to a sheet of paperboard or corrugated board. This technique allows for high-quality printing for the sales message, where as the other parts of the display can be printed at lower cost using flexography or can be left unprinted (see Flexography). The temporary display in Figure 2 has a flexo printed body with a litho sheet header card that is laminated to corrugated board.

The body of counter and floor-stand displays is designed in either an easel style or a tray style. Easels often have cells to partition the product. Figure 3 shows a corrugated-board, floor-stand display that uses an easel-style body with cells. This display ships as a prepackaged multipack so that the loading of the product is not required by the retailer. The tray style often uses a tiered tray as shown in Figure 4. The tiered-tray floor stand ships on a custom-sized wood skid. This display is intended as an end cap that will be placed at the end of an aisle. Some tiered trays are offset so that all of the product is displayed at once. The pallet-unit style shown in Figure 4 is commonly referred to as a “stacker.” This display is intended for a wholesale or warehouse club store. The large amount of product contained in the display would not be suitable for traditional retailers.

Floor-stand displays sometimes require a base to support the display. Figure 3 shows a typical base design. A popular industry practice is to use modular stock display designs from POP manufacturers. Then, the display is customized with special structural features on the header and the client’s graphics. The client incurs a lower cost, because no tooling charge for die-cutting exists for the stock elements.

Other Counter and Floor-Stand Displays. Counter displays have several unique categories, including contest boxes, counter cards, and literature holders. Figure 5 shows a counter card with an interactive feature. The camera’s audio unit is a talking voice chip with three prerecorded messages. Floor stands include several unique categories, as well. The standee is a standup person or object that is usually two-dimensional with an easel backing for support. Standees are often used when a

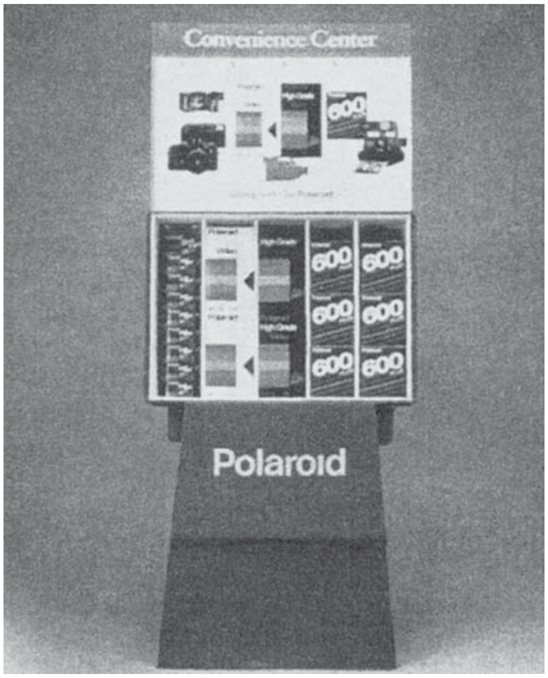

Figure 3. A corrugated-board floor-stand display that uses an easelstyle body with cells. The header and base are stock display designs.

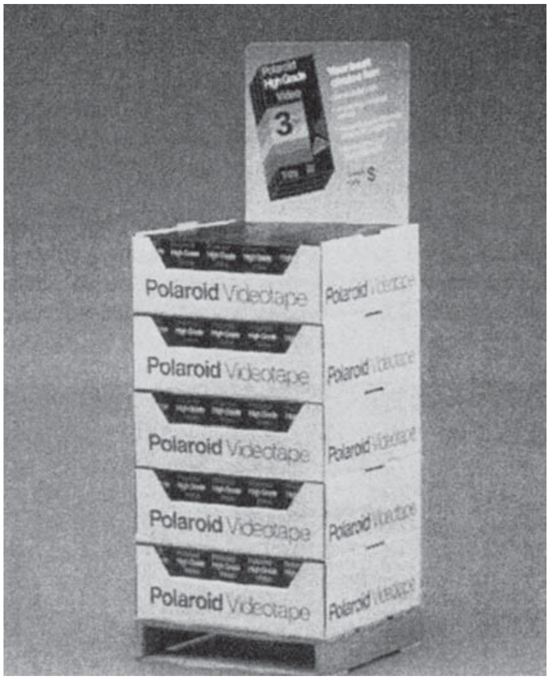

Figure 4. A palletized-unit display called a stacker uses a tiered tray design. A removable header tops the display.

public figure joins a company's advertising campaign. This visual element triggers recognition and reinforces a positive impression, which leads to consumer loyalty. Lastly, the dump bin style is also a category used in floor stands.

Figure 5. A counter card displays the product by mounting it in the card's panel. Customers can hear three prerecorded messages by pushing the RELEASE button.

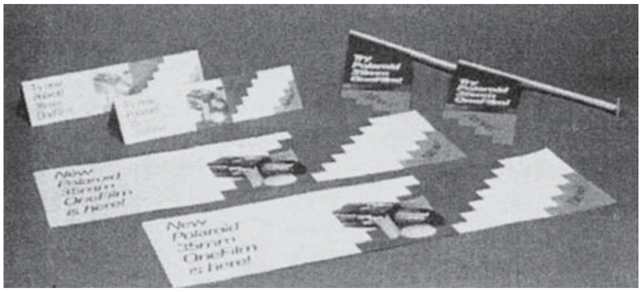

Figure 6. The photo includes banners, signs, and "shelf talker" flags on standout poles that clip onto a shelf edge.

Miscellaneous Temporary POP. Several miscellaneous categories fit under the temporary POP umbrella. Pole displays, overheads, banners, flags, posters, and mobiles are common. Figure 6 includes several examples of POP promotions that are used to complement a display system. The small flags in the photograph are used as "shelf talkers," with plastic clips to secure to the shelf edge. Along with hooks and clips, merchandising strips are popular, especially for use on power-wing or end-cap metal racks. A power wing is the side of an end cap where impulse merchandise is hung, often on hooks. Figure 7 shows two merchandising strips loaded with instant film packs.

The last area that falls under temporary POP is incentive items such as game cards, sweepstakes cards, rebate offers, on-pack coupons, and bottle neck toppers. The $5 mail-in rebate offer shown in Figure 8 has a counter card with a pad of rebate cards that explains the

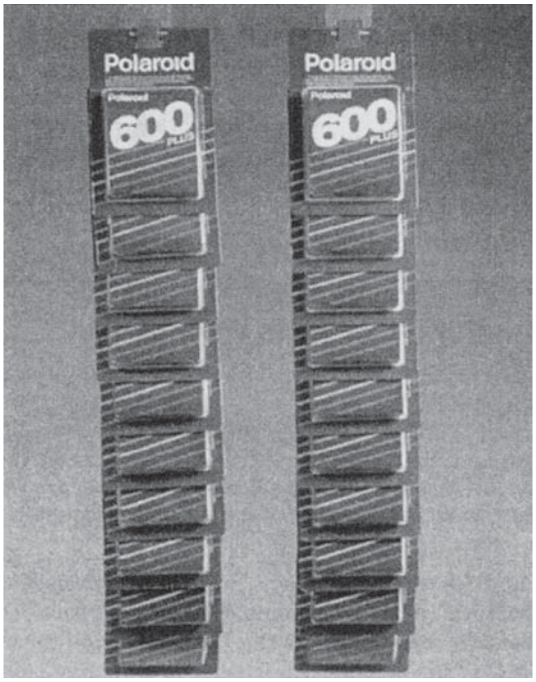

Figure 7. Two merchandising strips hold the instant film packs in a vertical display.

Figure 8. A pad of rebate offers on a counter card. Note the packaging graphics redesign to unify the look of the instant film product line.

rules of the promotion. Of special note to graphic artists is the packaging graphics redesign of the whole line of instant film shown on the center card. Earlier versions of the film box did not have a unified look for the product line's corporate and brand identity.

PERMANENT POP CATEGORIES

Permanent POP includes many of the categories that have been detailed for temporary displays such as any of the counter and floor stands. Much of permanent POP includes fixtures, which are not actually "packaging." However, it is the packaging engineer's job to specify the fixture and design shipping packaging to transport the promotion's fixture and the enclosed product to the retail store. A category called the spinner or spinner rack is most often intended for permanent display. It comes in counter or floor-stand designs. Figure 9 shows a floor-stand spinner rack with wire display pockets. Spinner racks that have hooks or pegs are also popular, and they are for products with hang tabs. Another form of permanent POP is product sampler or tester unit displays for industries such as cosmetics. Other categories usually associated with permanent POP are items such as dangling inflatables and motion displays that are heavily used in the competitive field of beverage and liquor packaging.

The next category of permanent POP is full-line merchandisers, which are category or shelf management systems. They are used to organize a company's offerings for a product line in any department of a retail store. It ensures facings are easily identifiable. Examples are seen in panty hose, wrapping paper and bows, and other product lines with many choices. For a product manufacturer, a full-line merchandiser ensures that the product will not be subject to the whim of a retailer's planogram. Retail stores use planograms—written diagrams with instructions—to lay out departments. The retail store finds planograms useful for cutting in new products, positioning higher-margin products in more visible locations, and periodic cleaning of fixtures. The last permanent category worth mentioning is computerized kiosks with interactive touchpad displays and printers. The kiosks are used in various applications such as multimedia questionnaires or self-service tools in which customers use the kiosk to help identify correct replacement parts for a product.

TRENDS

Trends in the industry include cross-merchandising in which two marketers join together in a promotion program. It is also called cobranding. For instance, a soft-drink manufacturer teams up with a candy company to do a joint temporary display. With changing channels of distribution due to increased competition from wholesale clubs and superstores, manufacturers are feeling a greater retailer influence. Promotions have become more account-specific, because retailers are demanding the customizing of displays for their use only. Another trend is co-marketing. Co-marketing teams up a retailer and a marketer who have developed a promotion together to leverage store and brand-name equity in order to build sales for both. A distinction is made between co-marketing and "prepackaged" promotions that a manufacturer has thoroughly thought out and then tailored to a specific retail account (2). For more specific data on trends in POP, *P/O/P Times* magazine published a second annual report on trends and growth patterns in its November/December 1994 issue.

FOR FURTHER INFORMATION

The Point-of-Purchase Advertising Institute offers many reference materials for sale through its information center in Washington, DC [phone (202) 530-3000]. These materials include written surveys, brochures, books, monographs, yearbooks, and audio cassettes. A helpful handbook is the *POPAI P-O-P Desktop Reference*, which provides 1200 POP industry terms. The General References list in the Bibliography (below) includes the only two books in print on the subject. Periodicals are the industry's major communication tool. Trade magazines that cater to the industry include *P/O/P Times*, a publication of point-of-purchase advertising and display; *P.O.P. & Sign Design*, for high-volume producers of displays, sign, and fixtures; *Creative*, which is published for sales promotion and marketing professionals who manage point-of-purchase display, trade-show-exhibit, and sales-promotion programs; and *Promo*, a magazine about promotional marketing. *Creative* publishes a yearly illustrated supplier directory arranged by category that includes company listings. In addition, several marketing management and packaging periodicals occasionally carry related journal articles. A *Marketing Science* article details a mathematical model for managing shelf space at retail (3). Research published by Percy and Rossiter shows how to apply successful message construction in POP to encourage a consumer purchase decision on the basis of an interplay of customer involvement and motivation (4).

Several trade shows catering to the POP market are held each year. Merchandising and design innovations

Figure 9. A permanent floor-stand spinner rack displays personalized greeting cards. The customer inserts the instant photo she has just taken into the card.

in POP packaging are promoted yearly in industry achievement award contests. The Point-of-Purchase Advertising Institute, POPAI, has sponsored a competition each year since 1960. Another contest is held at the annual Display, Sign and Fixture Design show.

BIBLIOGRAPHY

1. Editor, “How Shoppers Feel about Displays,” *P/O/P Times*, **58** (1995).
2. C. Hoyt, “Co-Marketing: What It Is And Is Not,” *Promo*, **32** (1995).
3. A. Bultez and P. Naert, “S.H.A.R.P.: Shelf Allocation for Retailers’ Profit,” *Market. Sci.*, 211–231 (1988).
4. L. Percy and J. Rossiter, “A Model of Brand Awareness and Brand Attitude Advertising Strategies,” in *Psychology & Market*, John Wiley & Sons, New York, 1992.

General References

Point of Purchase Design Annual, Rockport Publications, 1994.

Point of Purchase Design Annual: POPAI’s 36th Merchandising Awards, Retail Report, POP Advertising Institute Staff, 1994.

POLY(VINYL CHLORIDE)

Dennis A. Cocco
PolyOne Corporation, Avon
Lake, Ohio

Poly(vinyl chloride) (PVC) is, in terms of sales volume, the largest member of a group of polymers commonly referred to as "vinyls." These polymers are all based on either the vinyl radical ($CH_2{=}CH-$) or the vinylidene radical ($CH_2{=}CR-$). Included in this unique and versatile group of polymers are poly(vinyl acetate), poly(vinylidene chloride) (PVDC), poly(vinyl alcohol), poly(vinyl fluoride), poly(vinylidene difluoride) (PVDF), and poly(vinyl butyral). However, homopolymer PVC has the greatest applicability to packaging applications.

PVC packaging represented about 6% of total annual North American sales of PVC of 16.0 billion pounds in 2006 (see Figure 1). Growth has remained fairly steady over the past 10 years at approximately 1–2% per year. However, PVC is still a relatively minor material in the overall packaging market and is about 4% of all plastics used.

When first developed in the 1930s, PVC found little applicability or marketplace acceptance because of its tendency to thermally degrade or dehydrochlorinate (1) when heated. However, scientists soon discovered that additives such as stabilizers and plasticizers could easily be compounded into PVC to make it processable without thermal degradation. More importantly, they found they could also modify PVC's physical properties across a broad spectrum.

As a result, PVC has evolved into one of the world's most versatile polymers and the second-largest volume-produced plastics because of its toughness, relatively low cost, and the ability to modify its physical properties. A wide range of applications today includes pipe and pipe fittings, house siding, windows, electrical and telecommunication wire coatings, credit cards, and medical intravenous bags and tubing, as well as packaging applications such as bottles, food films, and blister packs.

HOW VINYL IS PRODUCED

Poly(vinyl chloride) (PVC), more commonly referred to as *vinyl,* consists of three primary elements: chlorine, carbon, and hydrogen. Chlorine is derived from a chloralkali production process; carbon and hydrogen are derived from ethylene through either a petroleum or natural gas cracking process (see Figure 2).

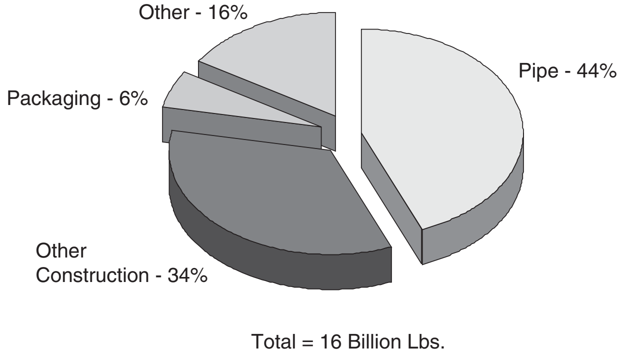

Figure 1. North American PVC end-market 2006.

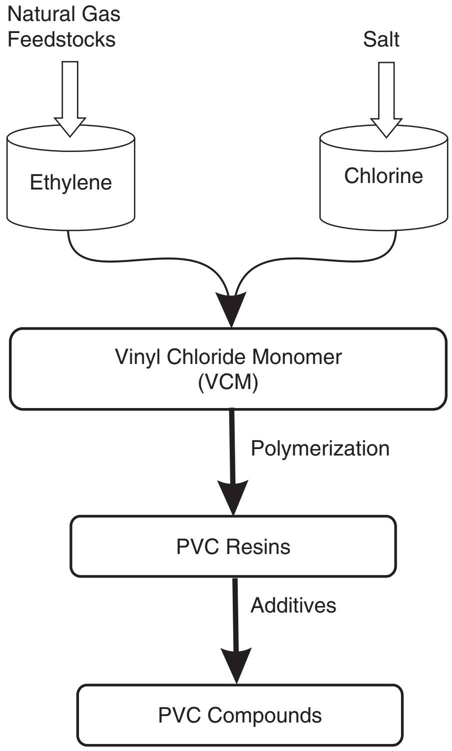

Figure 2. PVC production process.

In the chloralkali process, salt is combined with water to form a brine solution. This saltwater ($NaCl + H_2O$) solution is passed through an electric current in a process where chlorine atoms are attracted to the anode and where the sodium ions in the solution are attracted to the cathode electrode. This electrolysis process produces an electrochemical unit (ECU). The ECU is made up of 1.0 parts of chlorine and 1.1 parts of caustic soda (sodium hydroxide).

Ethylene is derived from the cracking of either petroleum or natural gas. In this process the feedstock is put through a catalyst bed at high temperature and pressure to produce ethylene and a number of other co-products such as propylene and butadiene. The ethylene is further processed to separate it from the coproducts.

Ethylene and chlorine are combined to first make 1,2-dichloroethane, then ethylene dichloride (EDC), and finally vinyl chloride monomer (VCM or $CH_2{=}CHCl$).

PVC is normally polymerized from VCM by one of four processes (suspension, mass, emulsion, and solution) into the following polymer structure:

$$(-CH_2CHCl-)_n$$

Each process uses peroxide-type initiations to produce free radicals, and the exothermic reaction is normally carried out at 95–167°F (35–75°C) (2). Under different reactor configurations, agitation, and reaction media, these four processes produce PVC resins with uniquely different physical characteristics. These characteristics play important roles in subsequent application processes such as extrusion and calendering.

The most commonly used process, which accounts for more than 90% of the PVC produced in North America, is called suspension polymerization. The remaining 10% is made up of mass polymerization and emulsion or solution polymerization processes. Each process creates a PVC resin that has a unique structure that plays a role in the type of end-use application that best fits the resin type. For example, suspension and mass polymerization-type PVC is used in pipe and house siding applications, while emulsion would be used coatings, toys, and flooring. Packaging applications generally use suspension and emulsion polymerized PVC resins.

There are presently six major manufacturers of PVC resins in the United States: OxyVinyls LP, Westlake Chemical Corporation, PolyOne Corporation, Shintech Inc., Georgia Gulf Corporation, and Formosa Plastics Corporation.

VINYL INDUSTRY CHANNELS

About 74% of all North American PVC resin is sold to fabricated products manufacturers, which convert the resin to compounds before producing the final end-use products. Custom compounders that make compounds for sale to PVC product fabricators purchase approximately 10% of the vinyl resin production. The remaining 16% is used by PVC resin producers that have their own integrated compounding facilities. These custom compounds are then sold to PVC fabricators in North America and throughout the world. Approximately 8% of the North American PVC resin production is exported annually.

STRUCTURE AND PROPERTIES

As a basis for discussing PVC's structure or morphology (3–5), some typical suspension-resin characteristics are shown in Table 1.

Table 1. Typical Characteristics of a PVC Suspension Resin

Molecular weight	
Inherent viscosity, ASTM D1243-95 (2000)	0.88–0.98
Weight average molecular weight	142,000–185,000
Number average molecular weight	55,000–62,000
Mean particle size, ASTM D1921-06	130–165 μm
Apparent bulk density, ASTM D1895-06 (2003)	0.450–0.550 g/cm^3
Porosity, ASTM D2873[a]	0.23–0.35 cm^3/g
Residual monomer, ASTM D 3749-95 (2002)	< 1.0 ppm

[a] Method withdrawn, no replacement.

Molecular Weight

The molecular weights of PVC resins produced in the United States are typically 0.55–1.50 inherent viscosity. As molecular weight increases, physical properties such as tensile strength and tear strength increase proportionately (6, 7), as does melt viscosity, which affects product processing. The tradeoff in selecting a PVC resin is to choose the minimum molecular weight to meet the end-product physical requirements while minimizing melt viscosity.

Particle Size

PVC particles are somewhat spherical as a result of the polymerization process (agitation, suspending agents, etc.). The resin particles generally have a size distribution of 70–250 μm in diameter, which results in a mean size of 130–165 μm.

Bulk Density

PVC has a specific gravity of approximately 1.40, but the resin's bulk density (8) is significantly less: 0.450–0.550 g/mL. Bulk density is directly related to the particle's morphology and specifically the resin's porosity, particle size and distribution, and particle surface characteristics.

Porosity

A single PVC resin particle from the reactor has a structure that contains many openings in its surface plus a measurable and accessible void within the particle. The amount of free volume within a resin particle is referred to as its *porosity*. This unique characteristic allows a PVC resin to absorb liquids such as plasticizer during the compounding operation. The amount of porosity and its accessibility play an important role when considering the amount and viscosity of the liquids added during compounding.

Residual Vinyl Chloride Monomer

During the polymerization of PVC, not all of the VCM is converted to polymer. Today the amount of residual monomer remaining in the dried PVC resin is significantly less than 1 ppm. This level establishes safe worker levels and provides acceptable levels in the product.

COMPOUNDING PVC

As discussed earlier, the addition of compounding additives enables PVC to be modified into many useful products. For example, the addition of a liquid plasticizer such as di(2-ethylhexyl)adipate (DEA) permits the production of a flexible film with the oxygen-transmission properties required for red meat packaging. The addition of a rubbery polymer such as methacrylate butadiene styrene (MBS) significantly improves the toughness or crack propagation characteristics as measured by impact tests (e.g., Gardner or Izod). PVC's tremendous versatility results from the ability to tailor those properties to the requirements of the application. With the proper additives, a rigid PVC bottle can be blow-molded for edible-oil packaging. Other ingredients allow the extrusion of a blown flexible film for produce wrapping. These formulations are generally highly proprietary and very specific to use applications and properties.

Stabilizers

Stabilizers give PVC the ability to withstand the thermal and shear conditions of processing without polymer degradation (9). Stabilizers used in food-contact applications, which must have FDA clearance, include Ca/Zn salts, epoxidized soybean oil, and octyl tin mercaptides. In other applications, stabilizers such as butyl or methyl tin mercaptides are used.

Plasticizers

There are numerous types of plasticizers, and each imparts a specific set of properties to the final product (10, 11). These liquid or polymeric additives generally reduce the T_g of PVC. At the same time, they reduce tensile strength and increase elongation. Certain plasticizers, such as di(2-ethylhexyl)phthalate (DEP), improve PVC's water-vapor barrier properties; DOZ (dioctyl azelate) significantly improves its low-temperature impact strength.

Lubricants

Generally, lubricants are added to PVC compounds to reduce the frictional properties between the compound and the metal surface of the processing equipment (12). They are also used to reduce the surface friction of the final product or to reduce the product's surface static properties. Lubricants include such families as paraffin waxes and metal stearates.

Impact Modifiers

Many types of impact modifiers have been developed for PVC packaging applications to improve PVC's toughness for transportation and handling. Examples include methacrylate butadiene styrene (MBS), chlorinated polyethylene, and acrylic polymers. The type used depends on application requirements such as clarity, cost efficiency, low-temperature impact, and metal-release properties.

Fillers and Pigments

Fillers such as $CaCO_3$ can reduce the raw-material costs of a PVC compound. They have little effect on physical properties at low levels. Some fillers can improve properties such as stiffness or abrasion resistance.

PVC IN PACKAGING

PVC packaging applications fall into three general categories: film and sheet, bottles, and others (including coatings and cap liners). About 25% of PVC in packaging involves food applications, 35% medical uses, and 40% nonfood end uses. These market percentages have remained remained fairly steady over the past 10 years.

Film & Sheet:

- Bister and clamshell packaging of toys, electronics, hardware, household goods
- Flexible film for produce and meat packaging
- Medical/Healthcare packaging for pharmaceuticals and medicine packaging, IV and blood bags
- Shrink wrap for tamper-proof over-the-counter medicines

Bottles:

- Jars for oils, peanut butter
- Personnel care products such as shampoo
- Pharmaceutical bottles for drugs and medicines
- Household bottles for cleaning fluid
- Automotive bottles for lubricants

Other:

- Cap and closure liners
- Can coatings

Figure 3. Typical PVC packaging uses.

Table 2. PVC Packaging Market Size[a] (million pounds)

	1994	2006
Film and sheet[b]	547	804
Bottles	188	160
Other packaging	80	36
Total	815	1000

[a] all figures in resin equivalents.
[b] Includes both flexible and rigid compounds.

Figure 3 describes the typical PVC packaging uses, and Table 2 gives the historic and current PVC packaging market sizes.

Film and sheet are the largest applications for PVC in packaging. Rigid blister pack and clamshell applications are the largest single use of PVC. PVC's toughness and clarity make it an ideal material to protect goods during shipping and while on the store shelf. As Figure 3 depicts, nearly 300 million pounds of PVC are used annually to make rigid sheet in thicknesses ranging from 0.010 to 0.150 in. PVC also has proved to be an excellent thermoforming plastic. Because of its ability to hold a form during the thermoforming process, its high impact resistance (even at low temperatures), and its excellent clarity, it has become widely used in the packaging of retail goods and medical products. One of the single most important growth applications has been in drug blister packaging, including unit-dose packets. PVC's performance and cost-effectiveness have led to its dominance of more than 95% of this market (13).

Flexible PVC film is used in food film for packaging meat, cheese, and produce. Among the advantages of PVC for these uses are its clarity, barrier properties, puncture resistance, and cling for good sealability (14). One of the unique advantages of PVC is its moderate oxygen permeability, which helps retard the transition of meat color from red to brown. Competition from modified atmosphere and high barrier films materials will likely limit the growth of PVC in this application.

PVC is used in bottles because of its clarity, impact resistance, ease of formability, chemical resistance, and cost-effectiveness. As a result, the PVC bottle market is primarily for cleaners, chemicals, toiletries, and cosmetics. The use in food packaging has continued to decrease because of competition from other materials such as PET, which has seen rapid acceptance worldwide in water bottles.

Approximately 350 million pounds of PVC is currently used annually in North America in various flexible and rigid medical packaging applications. PVC continues to find growing use because of its properties of clarity, impact, chemical resistance, barrier characteristics, and ability to be sterilized (15) with little loss of properties. Flexible PVC is the leading material for us in IV and blood bags. Despite growing concerns about the presence of plasticizers, since replacing glass for critical applications more than 35 years ago, PVC has proved to be safe, reliable, and the most cost-effective material available. PVC is also used in tubing for connecting various devices to patients.

Rigid PVC has also found growing use in blister packs, trays, and pouches as well as pharmaceutical bottles, particularly where barrier properties are required. Because of competing materials and attempts at substitution, PVC demand in medical applications is expected to grow no more than 3% per year over the next five years.

FDA STATUS

PVC is used extensively in food-contact applications such as meat wrap. It is prior-sanctioned for use in general food-contact applications by virtue of an article published in July 1951 in the *Journal of the Association of Food and Drug Officials of the United States* by A. L. Lehman of the FDA. In addition, PVC resins are listed in a number of specific FDA regulations relating to food-contact substances.

PVC AND THE ENVIRONMENT

Due to an anti-chlorine campaign led by environmental extremists, PVC is sometimes scrutinized and written about in misleading ways concerning its place in the environment. While some claim that PVC manufacturing is a large source of dioxin, in fact the United States Environmental Protection Agency (16) long ago concluded that this is far from being true. Their studies concluded that the manufacture of intermediate feedstocks for PVC is only a minor dioxin source (less than 11 grams per year for the entire industry) and that the PVC industry has made steady progress each year lowering the levels. The fact that over the last 20 years PVC production has tripled while dioxins in the environment have continued to decrease is difficult for PVC opponents to explain.

Other claims against PVC say that it is overwhelming our trash and recycling systems. Yet PVC is a small source in the municipal waste stream because most of its applications are durable, long-life products such as vinyl siding windows and pipe. In those applications, manufacturers are ready, willing, and able to provide recycling support if the material can be collected and separated efficiently. In fact, over a billion pounds per year of PVC is recycled on a post-industrial basis, implying that post-consumer recycling is mostly a matter of economic will. It is important to place criticisms of PVC into context and comparison with alternatives that would be substituted in its place. Recent European studies using life-cycle analysis (LCA) as a comparative environmental tool, have concluded that, overall, PVC has a similar environmental impact as alternatives.

The debate on PVC will long continue. However, it continues to prove to be a cost-effective and safe material for many applications, including packaging. Advocates against PVC in packaging continue to wage a spirited campaign and point to companies that have switched to alternative materials. In most cases, the switch occurred mainly for economic reasons; for example, as a bottlers production runs lengthened, switching to injection molding processes meant lower costs per unit and therefore a switch in materials was necessary. Given its product life-cycle phase, PVC use in packaging will likely continue at a mature pace and its history as a safe cost-effective material will likely never change.

BIBLIOGRAPHY

1. A. Guyot, M. Bert, P. Burille, and co-workers, “Trial for Correlation between Structural Defects and Thermal Stability in PVC,” paper presented at the Third International Symposium on Polyvinylchloride, Case Western Reserve University, Cleveland, OH, August 10–15, 1980.
2. L. F. Albright, *Chem. Eng.* **00**, 145–152 (1987).
3. P. R Schweagerle, *Plast. Eng.* **00**, 42–5 (1981).
4. N. Berndstein and G. Manges, *J Pure Appl. Chem.* **49**, 597–613 (1977).
5. H. Behrens, *Plaste and Kautschuk* **20**(1), 2–6 (1973).
6. J. R. Fried, *Plast. Eng.* **00**, 27–33 (1982).
7. S. Kaufman and M. M. Yocum, *Plastic Compound* **00**, 44–46 (1978).
8. M. A. Kauffman and R. S. Guise, *J. Vinyl Technol.* **16**, 39–45 (1994).
9. R. D. Dworkin, *J. Vinyl Technol.* **11**, 15–22 (1989).
10. F. Tomasellik, V. P. Gupta, H. S. Caldiron, and G. R. Brown, *J. Vinyl Technol.* **10**, 72–76 (1988).
11. J. K. Sears and J. R. Darley, *The Technology of Plasticizers,* John Wiley & Sons, New York, 1982.
12. J. A. Falter and K. S. Geick, *J. Vinyl Technol.* **16**, 112–115 (1994).
13. M. Larson, *Pharmaceut. Med. Packag. News* **00**, 23–27 (1993).
14. J. Southus, “PVC Film & Sheet in Packaging,” paper presented at the Regional Technical Conference, SPE, Mississauga, Ontario, Canada, September 13–14, 1983.
15. N. Perry, “Flexible PVC Medical Packaging Applications,” paper presented at the Regional Technical Conference, SPE, Missisauga, Ontario, Canada, September 13–14, 1983.
16. D Winters, Director Dixon Policy Project, Office of Pollution Prevention and Toxics, United States Environmental Protection Agency, *U.S. EPA’s Dioxin Reassessment:* Sources, Fate, Exposure.
17. W. F. Carroll, Jr., *J. Vinyl Technol.* **16**, 169–176 (1994).
18. F. E. Krause, *J. Vinyl Technol.* **16**, 177–180 (1994).

General References

L. I. Nass, ed., *Encyclopedia of PVC,* Vol. 1 (1976), Vol. 2 (1977), Vol. 3 (1977), Marcel Dekker, New York.

W. S. Penn, *PVC Technology,* MacLaren, London, 1966.

J. H. Briston and L. L. Katan, *Plastic Films,* Longman, New York, 1983.

POLY(LACTIC ACID)

Rafael Auras
School of Packaging, Michigan
State University, East Lansing,
Michigan

INTRODUCTION

Poly(lactic acid) (PLA) polymers are biodegradable polyesters derived from lactic acid (LA) or 2-hydroxy propionic acid, which is generally obtained by bacterial fermentation of carbohydrates from agricultural crops such as corn, potato, and cassava. PLA has been used extensively for medical applications since the 1970s because of its bioresorbable and biocompatible properties in the human body. Its use in packaging and textile applications until now has been scarce because of its high initial costs. However, discoveries of new polymerization pathways and advances in manufacturing technologies have dramatically lowered PLA costs (1–5). PLA was approved by the U.S. Food & Drug Administration for use in contact with foods in 1992 (6), PLA resin can be produced entirely from biomass, and the final products can safely be recycled, composted, or incinerated (2). PLA has been recognized by industries, consumers, and governments as a candidate material to help in reducing the municipal solid waste produced by packaging and containers (7).

To date, the production of PLA has reached a large-scale industrial capacity (75 metric kt in 2007 and is expected to reach 325 metric kt by 2010), which makes it the most important biopolyester produced from renewable resources (4). NatureWorks LLC (Blair, NE), the former Cargill Inc., and Dow joint venture, which is nowadays owned by Cargill Inc. and Teijin Ltd., produces the largest amount of commercially available PLA resins with a total production of 140 ktpa as of January 2009. Nature Works is also planning to start building a second plant. Toyota has produced special PLAs since 2003 for automotive applications. Galactic and Total Petrochemicals, Uhde Inventa Fischer, and Pyramide Bioplastics have announced plans to produce commercial PLA by the end of 2009. PURAC and Sulzer have also announced joint efforts to produce PLA from solid lactide to obtain expanded PLA beads to target the market of expanded polystyrene (PS). Additional development of stereocomplex PLA by PURAC, Musashino Chemical Laboratory, and Teijin has gained attention for the production of a 50/50 blend of poly(L-lactic acid) PLLA and poly(D-lactic acid) PDLA with a high melting point targeting fiber applications. More pilot scale plants to produce PLA have been announced in China, and currently, PURAC has expanded its lactic acid capacity targeting the increase of PLA demand (2, 4).

PRODUCTION OF HIGH-MOLECULAR-WEIGHT PLA

The main constitutional unit of PLA is lactic acid. LA can exist in two main optical configurations: L or D. PLA polymers can be produced with varying degrees of L or D lactic acid. According to its molecular composition, PLA can be named as poly(XY-lactic acid), in which X and/or Y are the amount of L and D lactic acid, respectively. D lactic acid mainly comes from the racemic lactic acid (LD configuration). So, a PLA polymer’s label as poly(96% L-lactic acid) will be composed of 96% L-lactic acid and 4% D lactic acid.

PLA is mainly produced by three synthesis processes: (a) polymerization through lactide formation, (b) direct condensation polymerization, and (c) azeotropic dehydration condensation (see Scheme 1). Ring open polymerization process is the technology producing the most amount

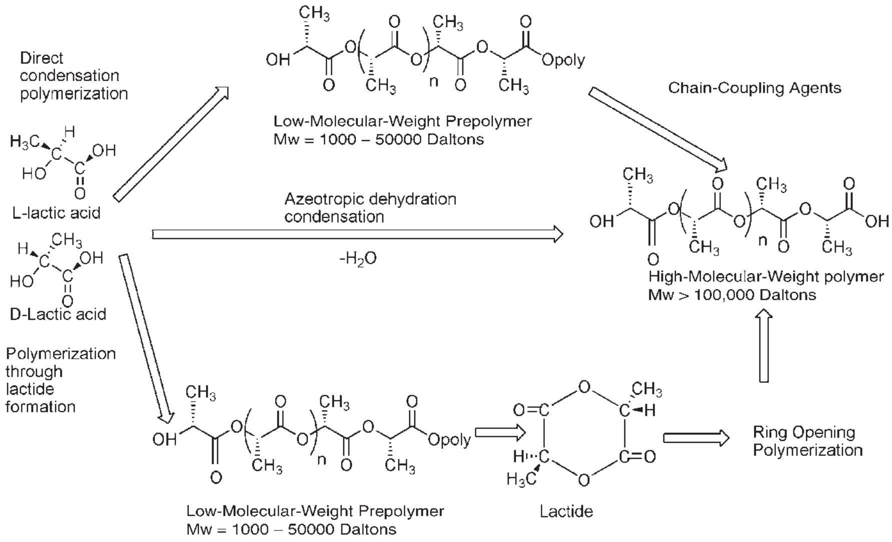

Scheme 1. Synthesis methods for obtaining high-molecular-weight polylactide and poly(lactic acid); scheme is from Auras et al. (2) by permission of Wiley-VCH Verlag GmbH & Co. KGaA

of PLA in the market. In this process, PLA is derived from lactic acid existing in two stereochemical configurations (i.e., L or D lactic acid), which is catalytically converted under low pressure into LL-lactide, meso or LD-lactide, and DD-lactide, and then it is ring open polymerized into different structures of poly(L-lactic acid, D-lactic acid, or LD-lactic acid). In the direct condensation and azeotropic dehydration condensation polymerization, PLA is derived from L and D-LA, directly. So, high-molecular poly(L,D, or LD LA) can also be produced (2).

PLA resins between 92% L-LA and 98% L-LA, and stereocomplex PLA (50/50 blend of PLLA and PDLA) can be obtained commercially. These resin grades can be processed by extrusion/thermoforming, injection molding, biaxially oriented films, injection stretch blow molded bottles, fiber melt spinning, and spunbond items. All these resins are mainly targeted for particular application; therefore, their degree of L-and D-lactide varies according to the applications (4). The latest developed stereocomplex resins are mainly used for fibers, films, and thermoforming articles.

PROPERTIES

Structure

The principal peaks of PLA absorption in the infrared range are summarized in Table 1. The strong infrared (IR) band at 2997, 2946, and 2877 cm^{-1} are assigned to the CH stretching region, $n_{as}CH_3$, n_sCH_3, and nCH modes, respectively. The C═O stretching region is observed by a large band at 1748 cm^{-1}. The region between 1500 and 1360 cm^{-1} is characterized by the 1456 cm^{-1} CH_3 bend. The CH deformation and asymmetric bend appear at 1382 and 1365 cm^{-1}, respectively. The bands that appear at 1315 and 1300 cm^{-1} are caused by the CH bend modes. In the region from 1300 to 1000 cm^{-1}, the C–O stretching modes of the ester groups at 1225 cm^{-1} and the -O-C asymmetric mode at 1090 cm^{-1} are presented. Between 1000 and 800 cm^{-1}, we can observe peaks at 956.36 and 921.94 cm^{-1}, which can be attributed to the characteristic vibrations of the helical backbone, mixed with the CH_3 rocking modes. Two bands related to the crystalline and amorphous phases of PLA are found at 871 and 756 cm^{-1}. The peak at 871 cm^{-1} can be assigned to the amorphous phase, and the one at 756 cm^{-1} to the crystalline phase. The peaks below 300 cm^{-1} correspond mainly to CH_3 torsion modes and to the skeletal C-C torsions.

Semicrystalline PLAs have superior physical and structural performance compared with amorphous PLAs. Researchers have postulated that the improvements in mechanical and barrier properties of semicrystalline polymers are related directly to complex crystalline structures and their distribution in the amorphous matrix (8–10). The amorphous polymer region cannot be in the crystal lattice of the semicrystalline polymer, and so it must reside between the lamellar stacks (interlamellar) or in the interfibrillar region within the spherulites (interspherulitic). The variation in size and shape of the crystallites, their spatial distribution, the crystalline morphology (which depends on molecular weight, polydispersity index, and processing conditions), the degree of crystallinity, and the space and distribution available for the amorphous region will all dictate the final physical, mechanical, and barrier properties of PLA.

Depending on the preparation conditions, poly(L-lactic acid) crystallizes in three forms (α-, β-, and γ-) (2). The stable α-form exhibits a well-defined diffraction pattern with a space group orthorhombic $P2_12_12_1$, with a unit cell containing two antiparallel chains. The chain conformation is a 2-fold (15*2/7) helix distorted periodically form of the regular s(3*10/7 helix). The lattice parameters are $a = 10.66$ Å; $b = 6.16$ Å, and c (chain axis) $= 28.88$ Å, with a crystal density around 1.26 $\mathrm{g/cm}^3$. The β-form of PLA is generally prepared at a high draw ratio and high drawing temperature. The chain conformation is a left-handed 3-fold helix. The β-form of PLA has an orthorhombic unit cell (containing 6 chains) that contains a 31 (3 Å rise/1 monomeric unit) polymeric helix. The lattice parameters of the unit cell are $a = 10.31$ Å, $b = 18.21$ Å, and $c = 9.0$ Å. The α-structure is more stable than the β-structure, with a melting point of 185°C compared with 175°C for the

Table 1. Infrared spectroscopy data: Peak band assignments for PLA infrared spectra

Assignment	Peak Position, cm^{-1}
–OH stretch (free)	3571
–CH- stretch	2997 (asym), 2946(sym), 2877
–C═O carbonyl stretch	1748
–CH$_3$ bend	1456
–CH– deformation including symmetric and asymmetric bend	1382, 1365
–C═O bend	1225
–C–O– stretch	1194, 1130, 1093
–OH bend	1047
–C–C– stretch	926, 868

β-structure. Chain packing in the β-form has recently been termed a frustrated structure, where the crystal structure comprises a frustrated packing of three 3-fold helices in a trigonal unit cell of parameters a = b = 10.52 Å, c = 8.8 Å, and space group $P3_2$ (11). The γ-form is formed by epitaxial crystallization and contains two antiparallel s(3/2) helices in the pseudoorthorhombic unit cell a = 9.95 Å, b = 6.25 Å, and c = 8.8 Å, and it assumes the known 3-fold helix of poly(lactic acid) (2).

Optical, Thermo-Physical, Rheological, Mechanical, and Barrier

The optical, physical, mechanical, and barrier properties of PLA compared with PS and polyethylene terephtalate (PET) are shown in Table 2. PLA has similar density than PET, and a similar semycrystalline structure can be obtained during processing. Because the glass transition temperature (T_g) of PLA and its heat deflection temperatures (HDT) are very close, PLA suffers heat deformation when it is exposed to temperatures higher than 50°C. The tensile strength values obtained for PLA are within the range of values reported in the literature for PS under the same testing conditions. However, when compared with PET, PLA films showed lower values. Table 2 also shows the water, oxygen, carbon dioxide, and aroma barrier properties of PLA and these values are compared with those of PS and PET when data were available. PLA has a better barrier for carbon dioxide, oxygen, and water vapor permeability when compared with PS but a lower barrier when compared with PET. PLA has an aroma barrier similar to PET, so it makes a good polymer for the storage of products with high flavor. Theoretical predictions based on the solubility parameters indicate that PLA will interact with nitrogen compounds, anhydrides, and some alcohol but will not interact with aromatic hydrocarbons, ketones, esters, sulfur compounds, and water.

PROCESSING

PLA suffers hydrolysis, which is a reduction in molecular weight caused by the presence of water at temperatures near the glass transition temperature ($T_g \sim 55$°C), so for processing it must be dried below 250 ppm (12). Additional drying should be conducted for processes that have long residence time. Drying of semicrystalline PLA should be conducted in the range of 80 to 100°C and below T_g for amorphous PLA (4). Because PLA degrades at elevated temperatures and relative humidity (RH), the resins should be protected from hot and humid environments during storage. Henton et al. (12) reported that amorphous PLA can dramatically reduce its molecular weight (M_w) in less than a month when exposed to 60°C and 80% RH. More information about the drying condition of PLA can be found elsewhere (4).

The main way to process PLA is through extrusion and injection molding, blow molding, film blowing, and melt spinning. To ensure that all the crystalline PLA phases are melted and to achieve an optimal melt viscosity for processing, PLA is generally extruded around 160 to 195°C. In general, commercial-grade PLA resins can typically be processed using a conventional extruder. Cast and film sheet of PLA are produced with a screw diameter of 19.3 mm, compression ratio of 2:1, and length/diameter ratio of 25. The recommended compression ratio for PLA processing is in the range of 2:3 (13). High roller temperatures (i.e., 25–50°C) are generally used to cast PLA avoiding the building up of lactide around the die. General equipment to process PET and PS can be used and/or modified to process PLA. The physical properties of PLA as for other polymers can be enhanced by orientation. Resins with a higher D-lactide content allow a higher drawing ratio. A blown film of virgin PLA resin is difficult to obtain. So, blown PLA films contain additives, such as viscosity enhancers, are to strengthen PLA's melting strength, and slip additives are used to reduce the coefficient of friction (4).

Thermoforming of PLA is normally conducted to produce PLA clamshells and containers. The properties of thermoformed PLA containers have been compared with PS and PET showing that PLA could out perform PET and PS at lower temperatures (14, 15).

PLA bottles have been produced based on injection stretch blow molding (ISBM) techniques. The ISBM process produces biaxial-orientated PLA bottles and has better properties than injection molding of amorphous PLA (4). Most of these bottles are currently being used for noncarbonated drinks.

PLA foaming has been gaining attention because of its potential to reduce weight and reduce thermal conductivity. Foaming of PLA has been a niche application in tissue engineering and medical implant applications. As the price of PLA is dropping, PLA foam can find new applications in packaging, such as cups, bowls, and loose-fill packaging materials (4). Most of the challenge in foaming PLA is controlling the bubble size of the foam structure (16). Another special category of growing interest for PLA applications is fiber spinning and electrospinning of ultrafine fibers. The former application has mainly reached market applications in textile production, and it is having great acceptability because of lower water-barrier properties. However the electrospinng PLA ultrafine fibers is mainly being developed for tissue engineering and biomedical applications (4).

Table 2. Optical, physical, mechanical, and barrier properties of PLA compared with PS and PET

	PLA	PS	PET
Optical			
Refractice index[a]	1.35–1.45	1.591	1.54
Clarity	Clear—yellow	Clear	Clear
Thermo-Physical			
Density amorphous,[b], kg.m^{-3}	1250	1030	1330
Density 100% crystalline,[c], kg.m^{-3}	1490	1150	1465
Van der Waals volume (V_W),[d], cm^3.mol^{-1}	34.45	62.9	94.2
Molar volume of glassy amorphous (Vg),[d], cm^3.mol^{-1}	55.12	99.0	144.5
Molar volume of semycrystalline polymer (Vc),[d], cm^3.mol^{-1}	49.44	92.0	130.0
Solubility parameter (δp), 25°C,[e] J$^{0.5}$ cm$^{-1.5}$	19–20.5	19.4	22.9
Glass transition temperature (T_g)[f] °C	55–65	105	73–80
Melting temperature (T_m),[f],°C	130–180	Atactic	245–265
Initial decomposition temperature ($T_{d,0}$)[g] °C	335	326	378
Half decomposition temperature ($T_{d,1/2}$),[g], °C	395	363	450
Average energy of activation (E_{act}),[g], kJ.mol^{-1}	205–297	230	—
Enthalpy (ΔHm),[h], 100%, J.g^{-1}	93, 135	N/A	135.8
Crystallinity,[g], %	0–40	N/A	10–40
Heat deflection temperature,[i], °C	55–65	88	70
Vicat penetration temperature,[i], °C	59	101	76
Thermal conductivity × 10^{-4} ,[j], cal.cm^{-1}.s^{-1}.C^{-1}	2.9	4.3	5.7
Heat capacity,[j] cal.g^{-1}.°C^{-1}	0.39	0.54	0.44
Thermal expansion coefficient × 10^{-6},[j], °C^{-1}	70	70	70
Surface tension,[k], dyn.cm^{-1}	42.0	40.7	44.6
Oxygen index (OI),[l]	—	0.185	0.21
Friction Coefficient,[m]	0.37	0.38	0.25
Melt Flow Index,[n], g. min^{-1}	0.85	0.28	7.2
Electrical, Magnetic, and Acoustic			
Dielectric constant,[o], e	N/A	2.25	2.9/3.2
Magnetic susceptibility, (c),[o], × 10^{-6}, cm^3.g^{-1}	N/A	0.705	0.505
Sound velocity, m_L,[o], m.s^{-1}	N/A	2400	N/A
Sound velocity of propagation of transverse waves, m_{Sh},[o], m.s^{-1}	N/A	1150	N/A
Rheological			
Intrinsic viscosity, n,[p], dl.g^{-1}	—	—	0.722 ± 0.029
Mark-Houwink constants			
K × 10^{-4},[p], DL.g^{-1}	8.5[b]	—	7.44[a]
a[p]	0.66[b]	—	0.648[a]
Mechanical			
Tensile strength @ yield,[q], MPa	0.88	36–51.7	48–72
Elastic modulus,[q], GPa	8.6	2.3–3.3	2.8–4.1
Elongation at break,[q], %	3–30	1.2–2.5	30–300
Flexural strength,[r], MPa	70	83	70
Flexural Modulus,[r],GPa	3.8	—	2.4–3.1
Unnotech Izod Impact,[r], J.m^{-1}	106	—	—
Notched Izod Impact,[r], J. m^{-1}	26	16	101
Rockwell hardness[r],	88	—	106
Impact strength	Poor	Poor	Good
Barrier			
Oxygen × 10^{-18},[s], kg.m.m^{-2}.s^{-1}.Pa^{-1} @25°C	1.21 ± 0.07	27	0.19
Oxygen activation energy,[s], kJ.mol^{-1} [25–45°C]	41.43 ± 3.5	–	30.30
Carbon dioxide × 10^{-17},[t], kg.m.m^{-2}.s^{-1}.Pa^{-1} @25°C	2.77 ± 0.05	15.5	0.17
Carbon dioxide activation energy,[t], kJ.mol^{-1}	15.65 ± 0.63	—	—
Nitrogen × 10^{-19},[u], kg.m.m^{-2}.s^{-1}.Pa^{-1}	468	—	0.68
Nitrogen activation energy,[u], kJ.mol^{-1}	—	—	—
Water × 10^{-14},[v], kg.m.m^{-2}.s^{-1}.Pa^{-1} @25°C	1.75 ± 0.05	0.67	0.11
Water activation energy,[v], kJ.mol^{-1}	−9.73 ± 0.27	0–8.0	—
d-limonene × 10^{-19},[w], kg.m.m^{-2}.s^{-1}.Pa^{-1}	< 1.0	—	9
d-limonene activation energy,[w], kJ.mol^{-1}	—	—	—
Ethyl acetate × 10^{-19},[w], kg.m.m^{-2}.s^{-1}.Pa^{-1}	5.34	—	—
Ethyl acetate activation energy,[w], kJ.mol^{-1}	N/A	—	—

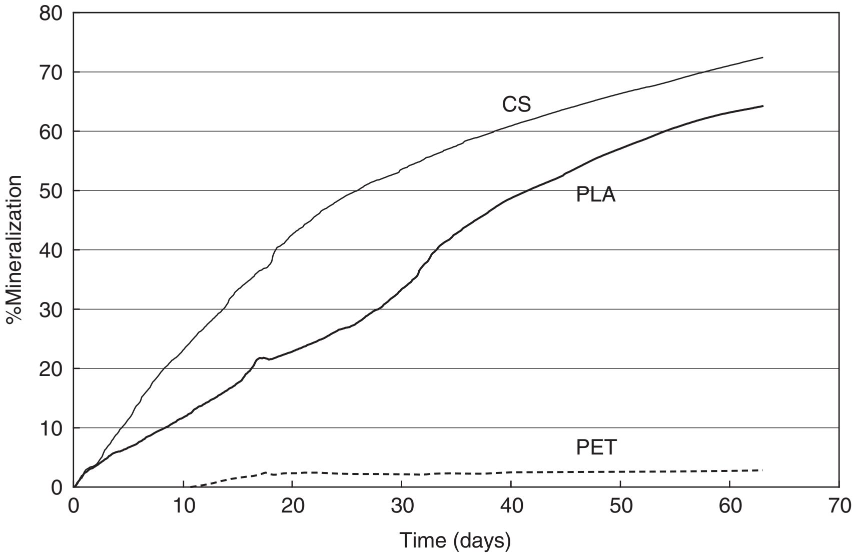

Figure 1. Percentage of mineralization of PLA, PET, and corn starch at 58±2°C and approximately 55±5% RH in yard waste compost (reproduced from Kijchavengkul et al. (27)) by permission from Elsevier B.V.

Blends of PLA with other polymers have been researched to improve PLA films bursting strength, elongation and tear strength, and impact resistance properties. Some main materials that have been blended with PLA are thermoplastic starch, poly(ethylene glycol), triacetin, tributyl citrate, poly(hydroalkanoates), and poly(3-hydroxyloctanoate) (4). Cost reduction is achieved when the blending counterpart has a lower cost. Besides PLA blending, compounding of PLA with inorganic or organic particles has investigated to enhance the barrier, thermal, and mechanical properties of the PLA composite. Special categories of compounding are nanocomposites which have been reinforced into PLA. Among the main nanocomposites used are layered silicates, carbon nanotube, hydroxyapaite, layered titanate, aluminum hydroxide, and cellulose nanowiskers (4). Layered silicate clays such as montmorillonite MMT have been researched extensively in the industry to produce PLA with higher mechanical and flexural properties, elevated heat distortion temperature, enhanced barrier properties, and accelerated biodegradation. Additional promise has been created with cellulose nanowiskers to produce PLA microwavable packages (4).

End-of-life Scenario

PLA can be recycled and has been certified as a compostable polymer according to ASTM D6400 and EN13432 by the main international certifying entities (7, 17). The composting of PLA is enhanced by hydrolysis because of the absorption of water resulting in the hydrolysis of the ester linkages. The rate of degradation is highly affected by temperature, moisture, and pH conditions of the

---

(*Table footnote Continued*)

N/A: Not available

[a] Refractive index values for PLA were calculated by Gladstone and Dale, Vogel, and Lloyenga methods according to Ref. (20). PS and PET values are experimental values obtained from Ref. (20).

[b] Density of the amorphous PLA was obtained from Ref. (21), PS and PET values are from Ref. (20).

[c] Density of 100% PLA, PET, and PS was calculated according to the group contribution method (20).

[d] PLA, PET, and PS values were calculated using the group contribution method (20).

[e] PLA, PET, and PS values were obtained from Ref. (2).

[f] T_g and T_m of PLA, PS, and PET were obtained from Ref. (1).

[g] Td,0 and Td,1/2 of PLA was obtained from Ref. (18); PS and PET values were obtained from Ref. (20).

[h] PLA and PET values obtained from Ref. (22).

[i] PLA, PS, and PET values were obtained from Ref. (23).

[j] PLA, PS, and PET values were obtained from Ref. (4).

[k] PLA value was obtained from Ref. (2); PS and PET values were obtained from Ref. (20).

[l] PLA value was obtained from Ref , PS and PET values were obtained from Ref (20).

[m] PLA, PET, and PS values were obtained from Ref. (2).

[n] PLA and PS, PET values were measured at 200°C and 5 kg according ASTM D1238.

[o] PS and PET values were obtained from Ref. (20).

[p] PLA and PET, PS values were measured according to ASTM D445 and D446 (PLA values were determined in Tetrahydrofuran at 30 °C, PET values were determined in phenol and 1, 1, 2, 2-tetrachloroethane (60:40 by volume) at 25 °C.

[q] PLA, PET, and PS values were obtained from Ref. (2).

[r] PLA, PS, and PET values were obtained from Ref. (23).

[s] PLA, PET, and PS values were obtained from Ref. (1, 22); oxygen activation energy are reported for temperatures between 25 and 45°C.

[t] PLA, PET, and PS values were obtained from (1); carbon dioxide activation energy is reported for temperatures between 25 and 45°C.

[u] PLA values were obtained from Ref. (24); PET and PS values were obtained from Ref. (20).

[v] PLA, PS, and PET values were obtained from Refs. (1, 22); water activation energy is reported for temperatures between 10°C and 37.8°C.

[w] PLA, PS, and PET values were obtained from Refs. (25, 26) (ethyl acetate values of PLA and PET are at 3030 PA, and 30°C and 9435 Pa and 30°C, respectively; d-limonene of PLA and PET are at 245 Pa and 45°C and 45 Pa and 23°C, respectively).

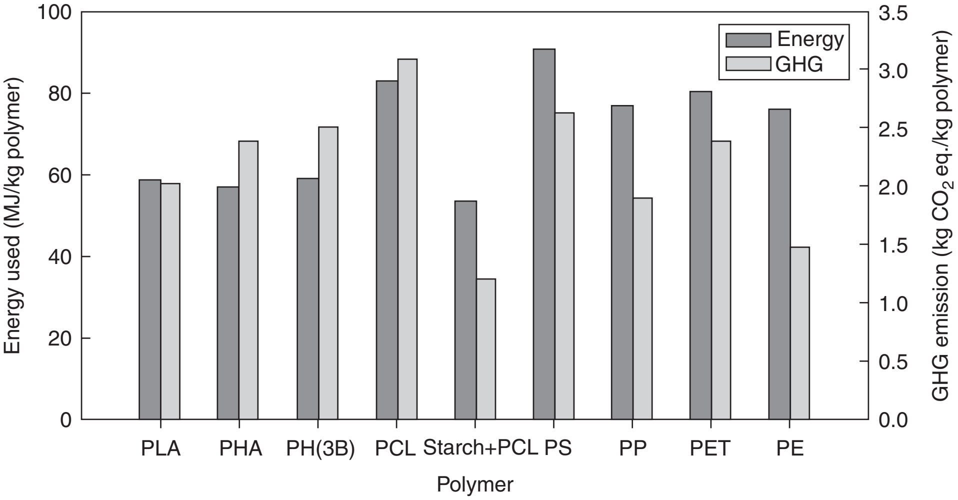

Figure 2. Energy used and amount of greenhouse gases (GHG) emission in CO_2 equivalent from producing 1 kg of polymer resin at the resin production plants (reproduced from Kijchavengkul and Auras (7) by permission from Wiley-VCH Verlag GmbH & Co. KGaA.)

compost (18, 19). PLA polymers with lower L-lactic acid content degrade faster in a compost environment. Figure 1 shows the mineralization of PLA bottles compared with PET bottles as a negative control in yard waste compost.

Figure 2 shows the energy used and amount of greenhouse gases emitted in CO_2 equivalents, from producing 1 kg of polymer resin (cradle-to-gate boundary). According to Figure 2, in general, production of these biodegradable polymers, except poly(caprolactone) (PCL), uses less energy than production of many nonbiodegradable plastics, such as PS, polypropylene (PP), PET, and polyethylene (PE). The production of PLA and PHA (polyhydroxyalkanoate) produces greenhouse gases in similar amounts as those of PS, PP, and PET. More research is necessary regarding the end-of-life scenario of these new biopolymers.

BIBLIOGRAPHY

1. R. Auras, B. Harte, S. Selke, and R. Hernandez, “Mechanical, Physical, and Barrier Properties of Poly(lactide) Films,” *J. Plastic Film Sheet*. **19**, 123–135, (2003).
2. R. Auras, B. Harte, and S. Selke, “An Overview of Polylactides as Packaging Materials,” *Macromolec. Biosci*. **4**, 835–864, (2004).
3. R. Auras, J.J. Singh, and S.P. Singh, “Performance Evaluation of PLA Existing PET and PS Containers,” *J. Test. Eval*. **34**, 530–536, (2006).
4. L.T. Lim, R. Auras, and M. Rubino, “Processing Technologies for Poly(lactic acid),” *Progr. Polymer Sci*. **33**, 820–852, (2008).
5. H. Tsuji, “Poly(lactide) Stereocomplex: Formation, Structure, Properties, Degradation, and Applications,” *Macromol Biosci*. **5**, 569–597, (2005).
6. R.E. Conn, J.J. Kolstad, and J.F. Borzelleca, et al., “Safety Assessment of Polylactide (PLA) for Use as a Food-Contact Polymer,” *Fd Chem Toxic*. **33**, 273–283, (1995).
7. T. Kijchavengkul, and R. Auras, “Compostability of Polymers,” *Polymer Internat*. **57**, 793–804, (2008).
8. B. Bonavoglia, G. Storti, and M. Morbidelli, “Modeling of the Sorption and Swelling Behavior of Semicrystalline Polymers in Supercritical CO_2,” *Indust. Engin. Chemi. Res*. 2006.
9. M. H. Klopffer, and B. Flaconneche, “Transport Properties of Gases in Polymers: Bibliographic Review,” *Oil Gas Sci. Technol*. **56**, 223–244, (2001).
10. L. Mandelkern, *Physical Properties of Polymers: The Crystalline State*, 3rd edition, Cambridge, University Press, New York, 2004.
11. J. Puiggali, Y. Ikada, H. Tsuji, L. Cartier, T. Okihara, and B. Lotz, “The Frustrated Structure of Poly(L-lactide) + ,” *Polymer*. **41**, 8921–8930, (2000).
12. D. E. Henton, P. Gruber, J. Lunt, and J. Randall, “Polylactic Acid Technology,” In: Mohanty AK, Misra M, Drzal LT, eds. *Natural Fibers, Biopolymers, and Biocomposites*, Taylor & Francis, Boca Raton, FL, 2005, pp. 527–577.
13. B. Glasbrenner, *NatureWorks(R) PLA—Commerical Development of Biopolymers on a World Scale*, GPEC. Atlanta, GA, 2005.
14. E. Almenar, H. Samsudin, R. Auras, B. Harte, and M. Rubino, “Postharvest Shelf Life Extension of Blueberries Using a Biodegradable Package,” *Food Chemi*. **110**, 120–127 (2008).
15. R. Auras, S.P. Singh, and J.J. Singh, “Evaluation of Oriented Poly(lactide) Polymers vs. Existing PET and Oriented PS for Fresh Food Service Containers,” *Packag. Technol. Sci*. **18**, 207–216, (2005).
16. L.M. Matuana, “Solid State Microcellular Foamed Poly(lactic acid): Morphology and Property Characterization,” *Bioresource Technol*. **99**, 3643–3650, (2008).
17. G. Kale, T. Kijchavengkul, R. Auras, M. Rubino, S.E. Selke, and S.P. Singh, “An Overview of Compostability of Bioplastic Packaging Materials,” *Macromole. Biosci*. **7**, 255–277, (2007).
18. G. Kale, R. Auras, and P. Singh, “Comparison of Degradability of Poly(lactide) Packages in Composting and Ambient Exposure Conditions,” *Packag. Technol. Sci*. **19**, 49–70, (2007).
19. G. Kale, R. Auras, S.P. Singh, and R. Narayan, “Biodegradability of Polylactide Bottles in Real and Simulated Composting Conditions,” *Polymer Test*. **26**, 1049–1061, (2007).

20. D. W. VanKrevelen, *Properties of Polymers*. 3rd edition, Elsevier Science B.V. Amsterdan, The Netherlands, 1997.
21. D. R. Witzke, *Introduction to Properties, Engineering, and Prospects of Polylactide Polymers* [Doctor of Philosophy], Michigan State University, East Lansing, MI, 1997.
22. R. Auras, B. Harte, and S. Selke, "Effect of Water on the Oxygen Barrier Properties of Polyethylene Terephthalate and Poly(lactide) Films," *J. Applied Polymer Sci*. **92**, 1790–1803, (2004).
23. R. Bhardwaj, A. K. Mohanty, "Advances in the Properties of Polylactides Based Materials: A Review," *Biobas. Materi. Bioenergy.* **1**, 191–209, (2007).
24. H. J. Lehermeier, J. R. Dorgan, and D .J. Way, "Gas Permeation Properties of Poly(lactic Acid)," *J. Membr. Sci*. **190**, 243–251, (2001).
25. R. Auras, M. L. Trevor, "Solubility of Gases and Vapors in Polylactide Polymers," in *Thermodynamics, Solubility and Environmental Issues*, Elsevier, The Neatherlands, 2007, pp. 343–368.
26. R. Auras, R. Harte, S. Selke, Sorption of ethyl acetate and d-limonene in poly(lactide) Polymers," *J. Sci. Food and Agricul*. **86**, 648–656, (2006).
27. T. Kijchavengkul, R. Auras, M. Rubino, M. Ngouajio, and R. Thomas Fernandez, "Development of An Automatic Laboratory-Scale Respirometric System to Measure Polymer Biodegradability," *Polymer Test*. **25**, 1006–1016, (2006).

POLYCARBONATE

Updated by Staff

INTRODUCTION

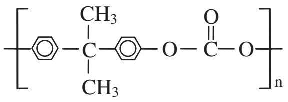

Polycarbonate (PC) is an amorphous resin that does not require orientation to achieve its full property profile. The molten resin can be extruded by the blown or cast processes (see Extrusion), injection-molded (see Injection molding), or blow-molded by the extrusion-blow or injection-blow techniques (see Blow molding). As polycarbonate cools into film, sheet, or containers, it exhibits excellent dimensional stability, rigidity, impact resistance, and transparency over a wide range of temperatures and loading rates (see Table 1). Because PC is amorphous, its wide softening range and added strength in thermoforming (see Thermoforming) operations provides deep-draw capabilities.

Polycarbonate is now the second largest engineering plastic produced, behind crystalline nylon. Leading world producers are BASF, General Electric, and The Dow Chemical Company (1). Trade names include Lexan (GE), Makrolon (Bayer), Calibre (Dow), Panlite (Teijin), and Iuplon (Mitsubishi).

Polycarbonate is prepared by the Schotten–Baumann condensation reaction of phosgene and an aromatic diol using an amine catalyst or a based-catalyzed transesterification of bisphenol and a monomeric carbonate (2).

PROPERTIES

Polycarbonate provides an excellent combination of tensile strength and flexural modulus at high temperatures (see Table 2). Its heat resistance, combined with superior impact resistance at both high and low temperatures, makes it an excellent structural layer in coextruded or laminated packaging for hot fill at 180–210°F (82–99°C), retorting at 250°F (121°C), autoclaving at 270–280°F (132–138°C), and frozen-food packaging. In addition, PC can be sterilized with both gamma and electron-beam irradiation with good stability.

Polycarbonate has light-transmittance values of 88–91% as compared with 92% for clear plate glass. It has a haze factor of less than 1%, and it maintains these values throughout the temperature scale. Its high gloss and easy colorability and printing contribute to distinctive package design. Polycarbonate has high resistance to staining by tea, coffee, fruit juices, and tomato sauces, as well as lipstick, ink, soaps, detergents, and many other common household materials. Its relatively dense composition makes it immune to odors, and its hard, smooth surface facilitates easy removal of foodstuffs.

Some of the most significant attributes of polycarbonate stem from its very low water absorption. Added weight increase after 24-h immersion at room temperature is only 0.15%. This low absorption level helps account for the resin's excellent dimensional stability and stain resistance. It also indicates that the resin, itself tasteless and odorless, is unlikely to pick up food odors. PC is available in grades that meet FDA and USDA regulations and is recognized as safe for food-contact applications.

PACKAGING APPLICATIONS

Refillable Bottles

Polycarbonate is the material of choice for use in reusable bottles, particularly 5-gal (19-L) water bottles, which represent the resin's chief packaging application. These bottles take advantage of polycarbonate's toughness (to resist breakage) and clarity (to see the contents). The fact that PC is much lighter than glass provides fuel savings as well as productivity improvements, since several bottles can be carried at once. Systems have been developed to wash polycarbonate and provide clean bottles for reuse with minimum impact on trippage. Lexan (now sold under SABIC Innovative Plastics) can be washed and filled 50 times while maintaining excellent taste, neutrality, and a transparent glasslike appearance (3).

Table 1. Typical Property Values for Polycarbonate[a]

Property	ASTM Test Method	Melt Flow Indexes				PC Copolymer
		22	16	10	6	
Specific gravity	D792	1.20	1.20	1.20	1.20	1.20
Light transmittance, 0.125 in. (3.2 mm), %	D1003	89	89	89	89	85
Haze, 0.125 in. (3.2 mm), %	D1003	1	1	1	1	1–2
Deflection temperature at 264 psi (1.8 MPa) °F (°C)	D648	260 (127)	265 (129)	270 (132)	270 (132)	325 (163)
Flammability rating,[b] UL 94, at 0.060 in. (1.5 mm)		V-2	V-2	V-2	V-2	HB
Tensile strength, yield, psi (MPa)	D638	9,000 (62)	9,000 (62)	9,000 (62)	9,000 (62)	9,500 (65.5)
Tensile strength, ultimate, psi (MPa)	D638	9,500 (65.5)	10,000 (68.9)	10,000 (68.9)	10,500 (72.4)	11,300 (77.9)
Elongation, rupture, %	D638	120	125	130	135	78
Flexural strength, psi (MPa)	D790	13,500 (93.1)	14,000 (96.5)	14,000 (96.5)	14,200 (97.9)	14,100 (97.2)
Flexural modulus, psi (MPa)	D790	335,000 (2,310)	340,000 (2,340)	340,000 (2,340)	340,000 (2,340)	338,000 (2,330)
Izod impact strength, notched, $\frac{1}{8}$ in. (3.2 mm) thick, ft · lbf/in. (kJ/m)	D256	12 (0.64)	13 (0.69)	15 (0.80)	17 (0.94)	10 (0.53)
Tensile impact, ft · lbf/in.^{2} (J/cm^2)	D1822	180 (37.8)	225 (47.3)	275 (57.8)	300 (63.0)	275 (57.8)

[a] Properties shown are average values that can be expected from typical manufacturing lots and are not intended for specification purposes. These values are for natural color only. Addition of pigments and other additives may alter some of the properties.

[b] This rating is not intended to reflect hazards of this or any other material under actual fire conditions.

Medical-Device Packaging

Polycarbonate meets many requirements of medical-device packaging (see Healthcare packaging). It is clear and tough, and it can be sterilized by commercial sterilization techniques: ethylene oxide (ETO), radiation, and autoclave sterilization (see Radiation, effects of). The development of coextrusion technology has afforded opportunities in all sterilization systems. Special grades have been developed to maintain clarity and resistance to yellowing upon gamma radiation (2). In thin films, PC can be coextruded with polyolefin heat-seal layers (see Coextrusions for flexible packaging; Coextrusions for semirigid packaging) to produce a cost-effective alternative to laminations based on oriented films (see Films, plastic). Because it is amorphous, heat sealing does not shrink or embrittle the film (see Sealing, heat). This virtually eliminates puckering, which can lead to hairline cracks and shattering upon opening. A soft blister package with good puncture resistance can be produced by thermoforming heavier-gauge film. For increased stability in the autoclave, a polycarbonate copolymer, poly(phthalate carbonate), can be incorporated into the structure. Properties of monolayer PC films are listed in Table 3.

Table 2. Tensile Strength and Modulus of Polycarbonate over a Temperature Range

Temperature, °F(°C)	Tensile Strength, psi (MPa)	Flexural Modulus, psi (MPa)
73 (23)	10,000 (68.9)	320,000 (2,206)
212 (100)	5,800 (40)	233,600 (1,610)
270 (132)	4,000 (27.6)	211,200 (1,456)

Food Packaging

Coextrusions of polycarbonate are being evaluated for use in several segments of the food-packaging market. The snack-food industry, along with other users of flexible-packaging materials, is discovering ways to use PC in coextrusions to replace laminated films in a portion of a structure or to replace the entire structure (see Multilayer flexible packaging). It is polycarbonate's toughness without orientation that makes it a good candidate for coextrusion. PC is used for food containers and baby bottles (4).

For frozen foods, the resin's low-temperature impact strength adds durability to dual-"ovenable" trays. In coextrusions, it can add toughness to crystallized polyester or polyetherimide trays. In cases where the wall thickness is determined by impact-strength requirements, gauge reductions up to 33% are possible.

In high-barrier multilayer containers, polycarbonate offers the rare combination of dimensional stability at retort and hot-fill temperatures, along with crystal clarity (see Retortable flexible and semirigid packages; Multilayer plastic bottles). To produce a 1% distortion in PC requires 3000 psi (20.7 MPa) stress. A similar distortion in polypropylene occurs at less than 500 psi (3.4 MPa) stress. Polycarbonate is about three times as expensive, but dimensional stability can be translated into value by making lighter containers with thinner walls by faster and more reliable closing a hot-fill temperatures, higher

Table 3. Polycarbonate Film Properties, 1 mil (25.4 μm)

Property	ASTM Test		Value
Specific gravity	D792		1.20
Yield, in.^{2}/(lb · mil) (m^2/(kg · mm)			23,100 (1,294)
Haze, %	D1003		0.5
Optical clarity	D1746		86–88
Tensile strength, psi (MPa)		MD	10,735 (74)
		XD	10,009 (69)
Elongation, %	D882	MD	91
		XD	92
Secant modulus, psi (MPa)		MD	185,000 (1,275)
		XD	196,000 (1,351)
Tear strength, gf/mil (N/mm)			
Initial[a]	D1004		454 (175)
Propagating[b]	D1922		16 (6.32)
Tensile impact, S type, ft · lbf/in.^{2} (J/cm^2)	D1822		225–300 (47.3–63.0)
Bursting strength, 1 mil, psi (kPa)	D774		27.4 (189)
Water absorption at 24 h and 73°F (23°C), %	D570		0.15
Folding endurance[c], cycles	D2176		11,000
Heat-seal temperature at 40 psi (276 kPa) for 3 s, °F (°C)			400–420 (204–216)
Oxygen permeability at 77°F (23°C) and 0% rh, cm^3 · mil/(100 in.^{2} day · atm) [cm^3 · μm/(m^2 · day · kPa)]	D1434		240 (933)
Water-vapor transmission rate at 100°F (38°C) and 90% rh, g · mil/(100 · in.^{2} · day) [g · mm/m^2 · day)]	E96-66		6.5 (2.6)
Coefficient of friction			
Static	D1894		0.570
Kinetic			0.542

[a] Graves.
[b] Elmendorf.
[c] Double folds.

retort temperatures with less critical overpressure control, and enhanced container-design flexibility.

An unexpected benefit from the use of PC in retort applications is an increase in the effectiveness of the barrier material EVOH (see Ethylene–vinyl alcohol). In a retort, moisture is driven into all layers of a plastic container. When the outside skin layer is polypropylene, the polypropylene prevents moisture from entering the structure, but it also prevents moisture trapped in the EVOH layer from escaping. Because polycarbonate has poorer moisture-barrier properties than polypropylene, it allows much more rapid drying of the EVOH layer and longer shelf life.

BIBLIOGRAPHY

J. M. Mihalich and L. E. Baccaro, “Polycarbonate” in *The Wiley Encyclopedia of Packaging Technology*, 1st edition, John Wiley & Sons, New York, pp. 510–511; in *EPT*, 2nd edition, pp. 740–741.

Cited Publications

1. K. L. Ring, H. Janshekar, and G. Toki, “Polycarbonate Resins” in *Chemical Economics Handbook,* SRI Consulting, Menlo Park, CA, 2005.
2. D. J. Brunelle, “Polycarbonates” in *Kirk–Othmer Encyclopedia of Chemical Technology*, Wiley, Hoboken, NJ, 2006.
3. “Lexan” www.geplastics.com, accessed April 2008.
4. O. G. Piringer and A. L. Baner, *Plastic Packaging,* 2nd edition, Wiley-VCH, Weinheim, 2008.

POLYESTERS, THERMOPLASTIC

Updated by Staff

INTRODUCTION

Poly(ethylene terephthalate) (PET) was first developed by a British company, Calico Printers, in 1941 for use in synthetic fibers. The patent rights were then acquired by DuPont and Imperial Chemical Industries (ICI), which in turn sold regional rights to many other companies. Polyester fibers have since made a considerable impact on the textile industry. The second principal application of PET was film. In 1966, PET became available for the manufacture of injection-molded and extruded parts.

The amazing growth of PET in beverage packaging began in the early 1970s with the technical development of biaxially oriented PET bottles (see Blow molding) and with the introduction of the first 2-L PET beverage bottle in 1976. The total world market for PET botttle resin is still growing at a rapid rate. The total devoted to carbonated soft drink or PET bottles is very large and the United States is the largest consumer, with Europe next. China is now advancing with a potential of 25–30 billion PET beer bottles per annum. The annual output of all plastic packaging materials including PET bottle resins was 9.5 million tons in 2005 and is expected to reach 13.7

million tons in 2008. PET bottle demand seems to be assured because of its balance of properties and the ability to be recycled. There is a strong demand for packaging mineral waters in Europe and there is a large hot-fill market in Japan. A market survey of the United States beverage container market for 2002–2007 shows that the market for plastic bottles (largely PET) is still growing, while glass and metal metal cans are static or in slight decline (see Table 1) (1).

PET has the following formula:

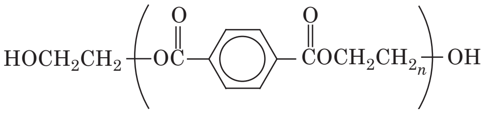

where n=100–200.

MANUFACTURE OF PET

Raw Materials

The raw materials for PET (see Figure 1) are derived from crude oil. *Para*-xylene, one of the two starting materials, is part of the naphtha feedstock that used to be fully available for chemicals because it was a byproduct of limited value to the oil refiner. Now it has become the source of additives that replace lead in unleaded gasoline in many countries. Of the mixed xylenes, because they come from the reformer, only *p*-xylene is suitable for building straight polymer chains, and the straight configuration is necessary to give the polymer its fiber- and film-forming (or bottle-wall-forming) characteristics and ultimately its high tensile strength. The other raw material for polyester is ethylene, which is contained in the crude oil's gas fraction. It is converted to ethylene glycol by oxidation and hydrolysis. All of these raw materials are now derived from oil, but it is technically feasible to produce them from coal-tar distillation.

Intermediate Products

Two different routes are used to manufacture PET: One route is by way of dimethyl terephthalate (DMT), and the other is by way of terephthalic acid (TPA). Both are dibasic acids. Figure 1 shows both routes. The plants for intermediate and end products are shown together, but they are normally physically separated. The process of making DMT is relatively simple: One end of *p*-xylene is first oxidized with air and esterified with methanol to yield a half-ester that is subsequently converted at the other end. The resulting DMT is purified by distillation and repeated crystallization to remove isomers and other impurities. The TPA route is similar. TPA can be produced by oxidation of *p*-xylene in solution and purified by solvent extraction.

Table 1. U.S. Beverage Container Market Survey *a*

Material	1997, Billion Units	2002, Billion Units	2007, Billion Units
Plastic	35	52	70
Metal	99	100	102
Glass	28	26	30

Source: Reference 2.

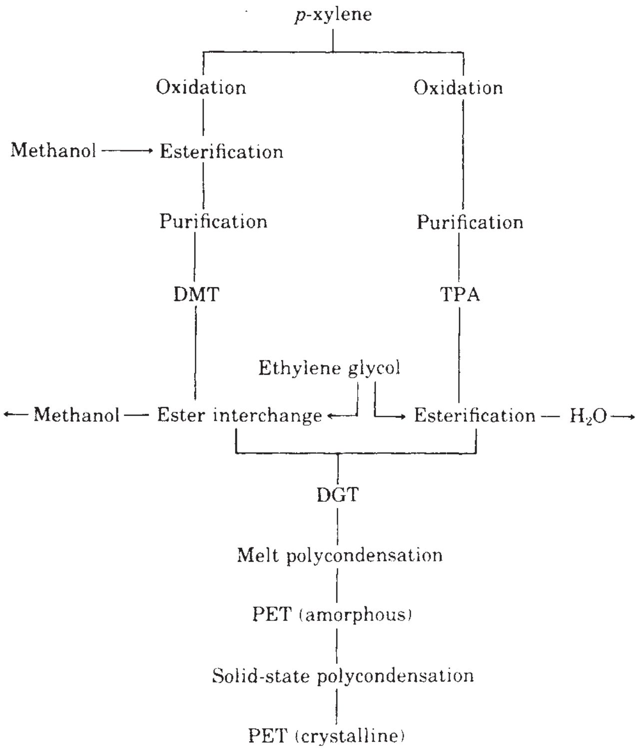

Figure 1. Manufacture of PET.

Melt Polycondensation

Both batch- and continuous-polycondensation processes are used. The continuous process inherently allows better product uniformity; the batch process is preferred for small quantities of specialty resins. On the DMT route, DMT and ethylene glycol (EG) are continuously metered into the ester interchanger, where the methyl end groups of the DMT are replaced by ethyl end groups to form diethylene glycol terephthalate (DGT), the monomer of PET. In this step, EG is consumed while methanol is evaporated and collected to be returned to the DMT plant. On the other route, TPA is esterified with EG to DGT, and water is removed as a byproduct. Subsequent polycondensation is the same for both routes. In EG takeoff, excess EG is removed and sent to the distillation plant for recovery. Polycondensation takes place in vacuum reactors designed to evaporate EG, the condensation byproduct, thereby shifting the equilibrium toward long polymer chains. The final step includes extrusion of the melt as strands or ribbon, quenching in water, and cutting to the desired chip size.

Solid-State Polycondensation

Melt polycondensation produces amorphous PET as used in most fiber and film applications. Unfortunately, this product is not suitable for the injection molding of food containers because the inherently high acetaldehyde level would affect the taste of some foods. A final solid-phase polymerization before stretch molding must be performed to remove the acetaldehyde (1). There are other impurities that might promote degradation during the injection-molding process; and amorphous resin tends to fuse and form lumps in the drying hopper. The polymer must be upgraded by the solid-state polycondensation process. Various agitation devices and polymer chip treatments have been described to prevent sticking (1). The chips are crystallized to avoid later sticking and then dried to reduce hydrolysis at high processing temperatures. Solid-state polycondensation takes place in the reactor, where the chips are subjected to high temperatures under vacuum (batch process) or in a nitrogen or dry-air stream (continuous process). The product's intrinsic viscosity (IV) is normally between 0.70 and 1.0. (Intrinsic viscosity is a method for the characterization of the average length of the molecule chains in PET.) High-viscosity resin is relatively expensive because its production is lengthy. High-viscosity PET (i.e., having longer molecule chains), offers better mechanical properties than the average-viscosity resin. These properties compensate for certain deficiencies of molded articles; for example, excessive volume expansion of beverage bottles can be limited by higher-viscosity resins that creep less under load. The final step is cooling, since the resin should not be exposed to moist air while it is hot.

HOMOPOLYMERS AND COPOLYMERS

PET is a homopolymer made from one part dibasic acid (i.e., TPA or DMT), and one part EG. A copolyester (copolymer) is made from more than one dibasic acid and/or glycol. Copolymers remove processing limitations and provide increased physical properties at elevated temperatures. In addition to DMT or TPA, isophthalic acid (IPA) can be used as a comonomer to reduce the rate and degree of crystallization to an extent that depends on its dosage. This broadens the processing parameters of food-container manufacturing machines.

Glycols offer several opportunities for modification. During polycondensation, EG reacts with itself to some extent to form diethylene glycol (DEG). Higher amounts of DEG affect many polymer properties. There are other glycols available as partial substitutes for EG (e.g., neopentyl glycol, cyclohexane dimethanol). All these modifications lead to desired polymer property changes (i.e., reduction of the crystallization rate, melting point, etc.). Cyclohexane dimethanol can react with a mixture of terephthalic and isophthalic acids in order to increase the melt strength of the polymer for extrusion processes (3).

On the other hand, some injection-molding (see Injection molding) and thermoforming (see Thermoforming) applications require accelerated crystallization rates in order to set up crystallization in the article, which prevents physical deformation at elevated temperatures. This objective can be achieved by nucleation, which involves the addition of other ingredients to the polymer. Inert, nonsoluble substances (e.g., mica, talc), organic substances (e.g., aromatic alcohols), and certain polymers (e.g., PP, PE) can be used as nucleation ingredients to increase crystallization rates.

The use of PET and optional added substances for food-packaging applications is governed by FDA Regulation No. 177-1630 of March 16, 1977 (revised April 1, 2007). Homopolymers and copolymers and additives must conform to this regulation.

PACKAGING APPLICATIONS

Homopolymers

By strict definition, most PET resins are modified homopolymers. These homopolymers are used to manufacture containers (i.e., bottles), by injection blow molding or injection-stretch blow molding (see Blow molding). Consumption of bottles for carbonated soft drinks runs into the billions of units in the United States alone. A main factor for bottle use is the permeability of the bottle wall to oxygen and carbon dioxide. Carbon dioxide pressure must remain during storage and oxygen from the air must not diffuse in. PET is semipermeable. Some early PET bottles had coatings of impermeable polymers, but the process involves extra steps and the bottles are not readily recyclable (1). The most marketable is plain PET with reduced permeability. PET bottles are also used for liquor, wine, food, toiletries, and pharmaceuticals, as well as for beer in some countries. Homopolymers cannot be processed by extrusion blow molding because of insufficient melt strength. For bottles containing beer and wine, the demands are far more severe than for carbonated soft drinks. Here it is important to keep oxygen out of the bottle. Oxygen permeability is a problem with PET. For high-barrier one-trip bottles, people are looking to coated or multilayer bottles to reduce oxygen permeability. There is much activity in Europe at the moment for plastic beer bottles. Ten percent of beer produced in Europe comes in PET bottles. In the United States, Anheuser Busch and Coors have started supplying their beers in 16-oz multilayer bottles (1).

Biaxially oriented PET film (see Film, oriented polyester) is usually manufactured by polycondensation and subsequent continuous casting of the film plus direct biaxial orientation; that is, molecule chains of the resin become biaxially oriented. Nonoriented PET film and sheet are manufactured by melting PET resin in an extruder and casting the melt through a flat die with subsequent calendering.

PET is also used for "ovenable" trays for frozen food and prepared meals. These trays are thermoformed from cast PET film and crystallized. Crystallization heat-sets the article to prevent deformation during cooking and serving. The main advantages of PET for this application include suitability for both conventional and microwave ovens,

Table 2. PET Polymer Resin Options for Different Manufacturing Processes and Applications

Manufacturing Process or Application (PET Resin Type)	Standard Homopolymer	Standard Bottle Resin	Slow-Crystallizing Copolymer	Fast-Crystallizing Homopolymer
Injection blow-molded bottles (nonoriented)		X		
Injection-stretch blow-molded bottles (biaxially oriented)		X		
Extrusion blow-molded bottles			X	
Sheet extrusion[a]	X		X	X
Film casting[a] (nonoriented)	X		X	X
Biaxially oriented film	X			
Heat-set film				X
Crystallizable PET trays				X
PET coating for paperboard	X			

[a] Resin option depends in desired application.

light weight, and superior aesthetics (as compared with foil trays).

Copolymers

Commercially available copolymers offer improved melt strength for the vertically positioned extrusion blow-molding process. They are used to some extent for bottles, and to a greater extent as extruded sheet for blister-pack applications. Since the FDA regulation permits certain copolymers for food-contact use, new applications include packages for noncarbonated drinks, cooking oil, and vitamin preparations.

In India, work on a blend of PET with poly(trimethylene naphthalate) is being used for beer bottles. This blend exhibits 18 times the carbon dioxide barrier of PET and 9 times the barrier to oxygen (4).

Hot-fill applications is a growing market. PET suffers from a low glass-transition temperature (70°C), which causes severe bottle distortion if the contents of the bottle approaches this temperature. A recent approach to the hot-fill problem is by DuPont. An amorphous isosorbide homopolyer is blended with PET. This blend raises the glass-transition temperature to 94°C (5).

Polymer options, manufacturing processes, and applications are summarized in Table 2.

The manufacturing process of PBT is very similar to that of PET. Instead of EG, 1,4-butandiol $[\mathrm{HO}{+}\mathrm{CH_2}{+}_4\mathrm{OH}]$ is used to react with either TPA or DMT. PBT is rarely used in packaging applications.

RECYCLING

About 1 billion pounds of postconsumer PET containers were recycled in 2004, a recycling rate of 21.4%. Cleaning of the recovered plastic comprises washing, rinsing, and drying. PVC is a common impurity in PET. Melting PET containing PVC will produce black spots due to charring. It is difficult to separate the two polymers after the bottles have been ground into small particles. Froth flotation has been shown to be an effective means of separation. Originally, PET was used exclusively for packaging soft drinks. As a result, the waste stream was fairly homogeneous consisting of unpigmented 1- and 2-L bottles. However, PET is now used to package a wide variety of beverages including water, fruit juices, tea, and beer plus other products such as edible oils, butter, and ketchup. These containers come in a variety of sizes and shapes, and various label adhesives and barrier resins are combined with the PET. Careful sorting of these containers is needed and can reduce the quality and yield of product. In the United States, PET from recycled bottles is used primarily in fiber applications. Recycled PET for food containers typically requires FDA approval. Two tertiary recyling technologies have been used: methanolysis and glycolysis. Suitability for food contact is a critical property in selling recycled PET. The FDA has issued letters of nonobjection to operators using methanolysis or glycolysis processes. Two-liter soda bottles containing recycled PET manufactured by glycolysis or methanolysis are widely available. The FDA has also issued a letter of nonobjection for a trilayer PET material having a middle layer sandwiched between two virgin layers of PET (6).

BIBLIOGRAPHY

"Polyesters, Thermoplastic" in A. J. Brody and K. S. Marsh, eds., *The Wiley Encyclopedia of Packaging Technology,* 2nd edition, Wiley, New York, 1997, pp. 742–745.

Cited Publications

1. A. J. East and co-workers, "Polyesters, Thermoplastic" in *Kirk–Othmer Encyclopedia of Chemical Technology*, Vol. 20, 5th edition, Wiley, Hoboken, NJ, 2006.
2. *Plastics World* (September 22, 2003).
3. P. Aspy and co-workers, "Controlled crystallization—PET Copolyester," Paper presented at the Seventh Annual International Conference on Oriented Plastic Containers, Atlanta, March 1983, Ryder Associates, Whippany, NJ, 1983.
4. "New PET Alloy Makes Monolayer Beer Bottle," *Asia Pacific News*, September 25, 2005.
5. J. Bradenberg and R. A. Hayes, U.S. Patent 6,818,730 (to E. I. du Pont de Nemours & Co., Inc.), November 16, 2004.
6. J. K. Borchardt, "Recycling, Plastics" in *Kirk–Othmer Encyclopedia of Chemical Technology*, Vol. 21, 5th edition, Wiley, Hoboken, NJ, 2006.

POLYETHYLENE, HIGH-DENSITY

Stephen J. Carter
Solvay Polymers, Inc.
Deer Park, Texas
Updated by Staff

INTRODUCTION

High-density polyethylene (HDPE) is a semicrystalline polymer, conveniently defined by ASTM as having a density of 0.941 or greater, with a typical upper limit of 0.965. For commercial purposes, HDPE is described as a homopolymer when the density is ≥ 0.960, but as a copolymer when the density is below this figure. The polymer is available in a wide range of molecular weights as determined by either MI or HLMI (melt index or high-load melt index).

HDPE is one of the largest-volume plastics used in packaging for the simple reason that it can be successfully employed in numerous transformation processes. Blow molding and injection molding account for 45–54% of total consumption of HDPE (1). Table 1 lists some of the major processes used and the products that can be obtained from them.

MANUFACTURE

HDPE is commonly sold in pellet form and is manufactured in a two-stage process. Polymerization takes place in a reactor on a continuous basis using either of two types of catalyst: Ziegler or Phillips. The choice of hardware today is limited to the slurry and gas-phase processes, the solution process having largely been bypassed on both cost and environmental counts, except for specialty grades. The slurry (Phillips) process was developed by the Phillips Petroleum Company and was licensed worldwide in the 1960s (2). Figure 1 shows a simplified view of the process. Purified ethylene, isobutane (the slurry carrier), activated catalyst, and any comonomer are circulated within loop-style reactors under relatively narrow ranges of pressure and temperature. At periodic intervals, portions of slurry are withdrawn and separated into unreacted materials, carrier, and HDPE. The raw polymer powder is dried and then stored in tanks until compounded in an extruder, together with the requisite additives (stage 2 of the process).

Table 1. Examples of Packaging Applications

Conversion Process	Examples of Packages
Blow molding	0.1 to 5.0-gal juice, water, or milk bottles Bottles containing pet food to bleach industrial 55-gal drums Bottles for cosmetics and pharmaceuticals
Injection blow molding	Bottles for cosmetics, personal care, pharmaceuticals
Injection molding	Caps and closures Pails and buckets Thin-walled dairy cups/tubs Crates Foamed packaging
Blown or cast film	Multiwall bag liners Grocery, merchandise or produce bags Breakfast-cereal wrappers Snack-food wrappers
Thermoforming	Prepackaged-food containers Dairy cups and containers Tubs for personal care, hygiene items Pallets
Sheet extrusion	Foamed sheet for packaging
Rotational molding	Water and chemical tanks and shipping containers

The newer gas-phase process was originally developed by Union Carbide in the 1970s and was named Unipol; BP Chemicals licensed a competing process about 10 years later. The gas-phase hardware dispenses with liquid carrier and, as the name suggests, permits direct polymerization of ethylene using living polymer as a fluid-bed medium and using ethylene as the fluidizing gas. From a distance, a GP reactor looks very much like a water tower because of the elongated bulb sitting on top of the cylindrical tower housing the fluid bed. The bulb is the portion of the reactor where fines deentrainment takes place. Newer world-scale HDPE plants are typically rated at 400–500 MM lb/yr and are composed of one or more gas phase units closed-coupled to twin-screw compounding trains.

Whatever the hardware, the core of the polyolefin manufacturing operation is the catalyst. Ziegler formulations are traditionally based on combinations of aluminum alkyls with titanium compounds, often with proprietary modifiers to improve productivity, comonomer incorporation, or other parameters. The catalyst may be chemically or physically attached to a variety of bases (e.g., silica or magnesium chloride) to improve productivity and flowability through controlled particlesize distribution (many catalysts are self-supporting). Ziegler catalysts tend to be unrestricted in molecular-weight (MW) terms, although they produce relatively narrow molecular-weight distributions (MWD). Phillips catalysts, on the other hand, tend to be restricted to fractional melt-index (MI) grades, producing broader MWD HDPE with better environmental stress-crack resistance (ESCR) properties (3).

In the realm of catalysts, the most recent development has been the commercialization of the metallocene type. Metallocene resins have been used to produce extremely high-clarity resins (4). New non-metallocene bimetallic catalysts are being developed to produce blow-molding resin a a single reactor (5).

MOLECULAR STRUCTURE

There are four principal features of HDPE that affect its packaging and processing properties: density, degree and type of branching, molecular weight, and molecular-weight distribution. As comonomer is introduced into the reactor to control density (typically 1-butene or 1-hexene), short-chain branching (SCB) is incorporated into the backbone of the polymer (catalysts can also create some SCB in the

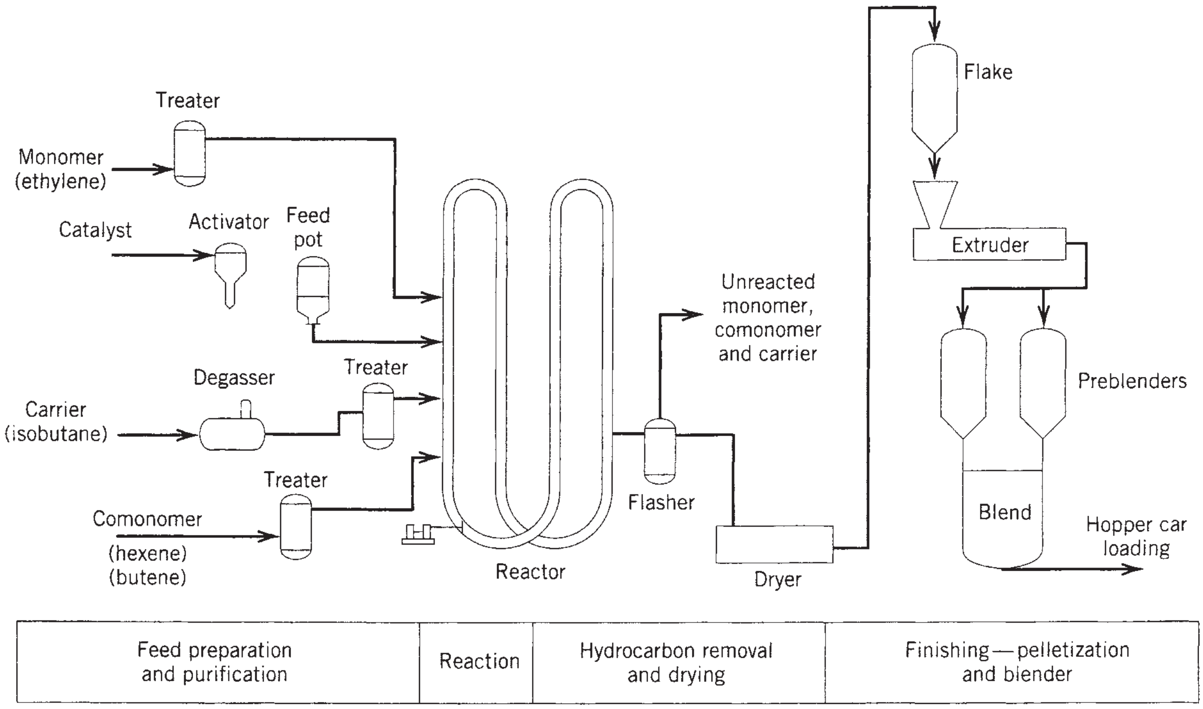

Figure 1. Simplified flow diagram for the Phillips (slurry) manufacturing process.

absence of comonomer). The nature and frequency of the SCB induce major disruptions in the HDPE crystallites, with the result that the density and degree of crystallinity are decreased. As little as one ethyl branch per 1000 carbon atoms can produce a density change of 0.01. As implied, the density of HDPE enjoys a rough linear relationship with regard to crystallinity. Commercial polymers exhibit degrees of crystallinity of 70–80% at 0.960, depending on the MW (MI) and type of SCB. A drop of 10% in crystallinity as one progresses from 0.960 to 0.940 is typical. There is increasing evidence that the "blockiness' of the branches is as important as the overall frequency (6). New information has been obtained using *temperature-rising-elution fractionation* (TREF), a relatively new technique for studying SCB that is independent of molecular weight and that fractionates polymers according to crystallinity, composition, and tacticity differences.

As a consequence of SCB, the morphology of HDPE in the solid state consists of three very different regions. The amorphous region contains polyethylene chains that are randomly oriented and acrystalline in nature, while the crystalline regions contain HDPE chains that are tightly packed in folds to yield differing types of geometries. Joining the two regions together is the interface. The crystalline regions imbue PE with its rigidity, tensile strength, and lack of permeability toward small molecules, while the extent of the amorphous areas affect impact resistance and ESCR.

Table 2 lists some of the major properties associated with changes in density, MW, and MWD. An increase in density causes a rise in tensile strength at yield, stiffness, and chemical resistance, while a decrease improves both ESCR and impact resistance. This results in compromises for many applications. For example, a 1-gal milk jug is manufactured from a homopolymer to extract the highest levels of top-load and lightweighting capability, while a bottle containing industrial chemicals (bleach, detergent, etc.) is blown from a lower-density resin to take advantage of the higher ESCR. Density is commonly measured by the gradient column method or, more recently, by an ASTM-approved acoustics technique.

The term *molecular weight* colloquially refers to the length of a polyethylene chain. Since all HDPE polymers possess a variety of chain lengths, it becomes necessary to mathematically define some MW terms in order to obtain meaningful information. Thus M_n, the number-average molecular weight, is $\Sigma N_i M_i / \Sigma N_i$, where N = number of polyethylene molecules and M = combined mass of the polyethylene molecules (e.g., 100 molecules at 10,000 + 100 molecules at 20,000 = 15,000). The weight-average molecular weight, M_w, is $\Sigma N_i M_i^2 / \Sigma N_i M_i$ (e.g., 100 molecules at 10,000 + 100 molecules at 20,000 = 16,667). For packaging applications, M_n ranges from about 7000 to 19,000 and M_w ranges between 80,000 and 250,000. When plastics people talk about MW, in reality they are referring to M_w.

Molecular weights are commonly estimated by rheological techniques (capillary/dynamic oscillatory rheometry), solution (intrinsic) viscosity, or the popular size-exclusion method, gel-permeation chromatography (GPC). However, each of these methods does give rise to considerable variation, especially for high-molecular-weight polymers, and any numbers quoted should be used only as a guide.

The most frequently used way of determining a measure of MW is the melt index (MI). For HDPE, this is condition E of ASTM D1238, which uses a well-delineated

Table 2. Influence of Density, Molecular Weight, and Molecular-Weight Distribution on Selected HDPE Properties

Property	Density ↑	MW ↑	MWD Broadens
Tensile strength at yield	↑	↑	↑ (sl)
Tensile elongation at break	↓ (sl)[a]	↑	
Flexural modulus	↑	↓ sl	
Stiffness	↑	↑ (sl)	↓ (sl)
Impact strength	↓	↑	↓
Melt strength		↑	↑
Melt viscosity		↑	↓
		↑	↑
Die-swell ratio (DSR)			
Heat-deflection temperature	↑	↑	↓ (sl)
Permeability	↓	↓	
ESCR	↓	↑	↑
Chemical resistance	↑[b]	↑	
Gloss	↑[c]	↓	↓
Haze	↑	↑	
Shrinkage from melt[d]	↑ (sl)	↑ (sl)	↓ (sl)
Flowability and processability		↓	↑

[a] sl=slightly.

[b] Attack by strong oxidizing agents excepted (e.g., hydrogen peroxide, concentrated nitric acid, concentrated bleach).

[c] Highly dependent on polymer type.

[d] Subject to cooling rate, part thickness, etc.

capillary rheometer, a temperature of 190°C, and a 2.16-kg load to push the extrudate out of the barrel.

The MI is simply the weight of polymer collected during a 10-min period under these conditions. For higher-MW polymers, the load is changed to 21.6 kg and the result is referred to as *high-load melt index* (HLMI). The ratio of HLMI/MI represents a crude measure of the molecular-weight distribution and is often the simplest technique for quality-control purposes. Polydispersity, formally M_w/M_n, is a more rigorous gauge of MWD and is usually obtained by GPC. Because this method gives a direct visual representation of the MWD, it can also supply other information that is absent from other techniques. Figure 2 shows typical MWD curves for a variety of polymer types. Note that such features as modality, symmetry, and MWD breadth are easily determined.

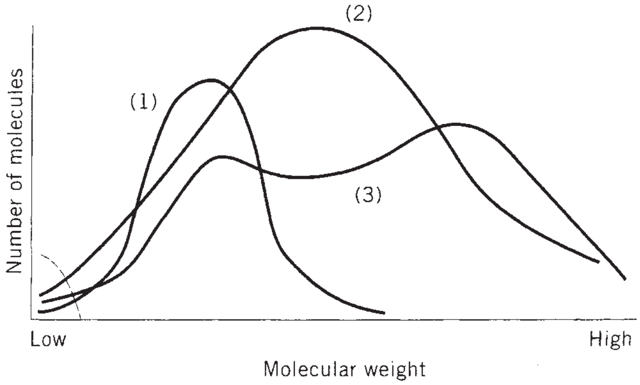

Figure 2. GPC curves for various types of HDPE polymers: curve 1—low-MW, symmetrical, narrow-MWD injection molding resin; curve 2—medium-MW unsymmetrical monomodal blow-molding resin; curve 3—high-MW bimodal film resin. The dashed line in the lower-left corner represents the oligomer region.

From Table 2 it can be seen that both MW and MWD affect virtually all common properties, especially melt parameters, processing, and impact strength.

One other type of branching is long-chain (LCB). These longer side chains to the PE backbone are characteristically 6–12 carbons long. They impact both melt elasticity (important for foamability, large parison stability, etc.) and processability (how easily a material can be transformed). In other end uses, LCB sites can be used to initiate crosslinking with a peroxide or other suitable radical generator. LCB can be imaged through elongational or short-die, capillary-die rheometry techniques.

PROPERTIES

Chemical

HDPE resists most chemicals, including dilute acids and bases, oxidizing agents, hydrocarbons, and some aldehydes/ketones. The major exceptions are chlorohydrocarbons and aromatics, which tend to swell and soften the polymer. Even some of these chemicals can be packaged in HDPE if the interior surface is fluorinated or sulfonated, or if a coextrusion with a barrier layer is incorporated (e.g., nylon).

The ability of an agent to degrade HDPE over a period of time is dependent on the ESCR of the polymer. The failure mechanism is the extension of a crack at a focal point, or local area of concentrated stress. On a microscopic level, one might consider this to be a plasticization of the strands of PE that link the crystals of HDPE together in the interfacial zone—in other words, a dissolution of the "glue" that binds the crystalline regions. Both density and MW have a profound effect on this parameter, so the trick is to make a grade of HDPE that has the highest density and lowest melt viscosity compatible with the application.

ESCR is usually measured by the *bent-strip test* (ASTM D1693), which involves taking a strip of HDPE, making a notch in it, and bending it in a jig, so that the notch provides a narrow area of constant strain. The strip is immersed in either 100% detergent (condition A), or 10% solution in water (condition B). The latter is considered a much more aggressive condition. For bottles, it is also possible to employ a more sophisticated, real-world test by applying a low constant pressure to a bottle that contains a small amount of water or other liquid [constant-pressure bottle test (CPBT)]. Failure occurs when either the bent strip snaps or, in the case of the CPBT test, the bottle bursts and leaks liquid. In either case, ESCR is reported in average number of hours to failure based on a statistical approach, or first to fail.

The permeability of HDPE toward small molecules is most dependent on the density, because it is the crystalline regions that present the highest impedance. Longer, more entangled, higher-MW chains also cause small molecules such as oxygen or water to take a more tortuous path. The transmission rates of gases such as moisture are dependent on the thickness of PE that they have to traverse, as well as the temperature and concentration of the gas. As the thickness of the HDPE is increased, the ability of the layer to prevent small molecules from passing through it decreases exponentially. As barrier polymers go, HDPE is only a fair performer. To get the smallest transmission rates through a film or bottle wall, it may be necessary to make a multilayer construct using coextrusion.

Preparation of the surface of HDPE for decoration is most commonly achieved by treating it with either a gas flame or corona discharge. In the case of either method, time should be taken to optimize the process. The polyethylene on the surface should become sufficiently oxidized so that the surface tension rises from 29 to at least 36 dyn/cm. Simple tests based on water dissipation or dye retention can often be used as a quick check. One should be aware that many additives such as antistats, lubricants, and slip agents can migrate quickly through the plastic and cause print delamination over a period of days. The same result is seen when the oligomer content is high.

Physical

Impact resistance of a bottle or container is one of the most important parameters in packaging. This property is improved by decreases in density and MWD, and an increase in MW. Often the needs for impact resistance are in direct conflict with load-deformation requirements. The degree of impact resistance can be assessed by a variety of tests performed on compression-molded plaques, such as Izod or Charpy, in both notched and unnotched conditions. Dropping heavy weights on plaques in ambient or cold temperatures using the Gardner apparatus is also practised widely (dart impact for films). Many manufacturing companies also drop loaded containers in various attitudes to verify performance and ensure that the design or molding process itself has not introduced a weakness.

Load deformation comes in two flavors: (i) instant, or top load, in which the stress is exerted on a bottle or other container during a momentary situation (e.g., during filling or capping); and (ii) constant loading, in which bottles are stacked on top of one another during a long storage period. If the material being contained is nonchemically aggressive, a homopolymer of medium MW should prove sufficient for the application. A more demanding ESCR service will require an HDPE of higher MW, or lower MI to compensate for the reduced stiffness of the lower-density material. The conventional gauge of stiffness is flexural modulus and typical numbers for HDPE range from 250,000 for a homopolymer to half that value for a 0.940-density material.

APPLICATIONS

Blow molding and injection molding are the dominant processes for preparing end products of HDPE. The important packaging use is for extrusion molding of bottles for milk, water, and liquid detergent (1, 5). HDPE coextrusions with LDPE, ethylene, and vinyl acetate copolymer or ionomer are widely used in liners for food cartons. Injection molding produces a wide variety of products including cups, pails, crates, trays, food containers, and caps and closures. Blown films are used for sacks and bags, trash can liners, and food packaging (5).

RECYCLING

In 2006, $17{,}645 \times 10^6$ lb of HDPE was produced in the United States (7). About 24.8% of produced HDPE is recycled in the United States, mainly milk and water jugs and liquid detergent bottles. Cleaning of the recovered plastic comrprises washing, rinsing, and drying. Removal of the labels is the worst problem in the washing and drying stages. Detergents are usually used to improve the efficiency of label removal. Metal-foil labels can introduce metal into the polymer. When metal-foil labels are heat-sealed onto the plastic, the only way to remove them is by using an extrusion-melt filter. This leads to plugging of the filter screens, causing more frequent changes and the increasing production costs. During the rinse cycle, polyethylene particles sink to the bottom of the bath and can be separated from the polyethylene. Recycled HDPE is used for nonfood bottles, pipes, lawn and garden products, film, lumber, pallets, crates, buckets, and automotive parts (8).

BIBLIOGRAPHY

Stephen J. Carter, “Polyethylene, High-Density” in *The Wiley Encyclopedia of Packaging*, 2nd edition, John Wiley & Sons, New York, 1997, pp. 745–748.

Cited Publications

1. A. Borruso, ‘High-Density Polyethylene Resins” in *Chemical Economics Handbook*, SRI Consulting, Menlo Park, CA, 2008.
2. J. P. Hogan and R. L. Banks, U.S. Patent 2,825,721 (to Phillips Petroleum Co.), March 4, 1958.
3. M. B. Welch and H. L. Hsieh, “Olefin Polymerization Catalyst Technology” in C. Vasile and R. B. Seymour, eds., *Handbook of Polyolefins,* Marcel Dekker, New York, 1993, pp. 21–38.
4. E. Benham and M. McDaniel, “Polyethylene, High Density” in *Kirk–Othmer Encyclopedia of Chemical Technology*, Vol. 20, 5th edition, John Wiley & Sons, Hoboken, NJ, 2006.
5. R. I. Mink and co-workers, U.S. Patent 7,129,302 (to Univation Technologies, LLC), October 3, 2006.
6. L. T. Wardhaugh and M. C. Williams, “Blockiness of Olefin Copolymers and Possible Microphase Separation in the Melt,” *Polym. Eng. Sci.* **35**, 18–27 (1995).
7. *Year End Statistics*, American Chemistry Council, December 28, 2007.
8. K. Borchardt, “Recycling, Plastics” in *Kirk–Othmer Encyclopedia of Chemical Technology*, Vol. 21, 5th edition, John Wiley & Sons, Hoboken, NJ, 2006.

POLYETHYLENE, LINEAR AND VERY LOW-DENSITY

V. Firdaus
P. P. Tong
Mobil Chemical Company
Edison, New Jersey
Updated by Staff

INTRODUCTION

Polyethylene is a thermoplastic material well suited for packaging applications. It is a large-volume commodity resin. In 2006, U.S. and Canadian production of linear low-density polyethylene (LLDPE) was $13{,}037 \times 10^6$ lb. Sales and captive use totaled $13{,}050 \times 10^6$ lb (1). Market share corresponded to 28.7% of total consumption (2). LLDPE has established itself as the third major member of the global polyethylene market, which includes low-density polyethylene and high-density polyethylene. Polyethylene resins are available in a variety of molecular weights and densities tailored to specific end-use markets. Polyethylene can be generally classified into the product types listed in Table 1 on the basis of its density.

HISTORY

In the early 1950s, 20 years after ICI pioneered LDPE in the United Kingdom using a high-pressure process, Phillips Petroleum Company commercialized catalysts containing chromium oxide supported on silica. These catalysts were used to produce HDPE, which became the first commercial products of catalytic ethylene polymerization. Almost simultaneously, K. Ziegler and co-workers (2) discovered a new group of transition-metal catalysts that polymerize ethylene and other α-olefins under mild conditions. The first commercial introduction of LLDPE was made in a solution process by DuPont Canada in 1960 (3) using these catalysts. In 1976, W. Kaminsky and H. Sinn discovered a new family of catalysts for ethylene polymerization using metallocene complexes (4). These catalysts afford the synthesis of ethylene copolymers with a high degree of compositional uniformity. Currently, there are several commercial processes that produce LLDPE and VLDPE as described in the next section (5).

Table 1. Commercial Classification of Polyethylene Resins

Product	Density (g/mL)
High-density polyethylene (HDPE)	0.94–0.97
Medium-density polyethylene (MDPE)	0.926–0.939
Linear low-density polyethylene (VLDPE)	0.915–0.926
Very low-density polyethylene (VLDPE)	0.89–0.915
Low-density polyethylene (LDPE, produced via free-radical polymerization)	0.915–0.940

PROCESS

LLDPE and VLDPE resins are commercially produced by several processes, including gas-phase, solution, and slurry polymerization. The first gas-phase process using the fluid-bed process was developed by Union Carbide in 1979 and has been licensed worldwide. Another gas-phase process used globally is one developed by British Petroleum Company. Ethylene copolymers with butene, hexene, and 4-methyl-1-pentene are produced in the fluidized-bed reactors, a highly versatile, economical process that can accommodate various types of catalysts. Although Ziegler–Natta catalysts are most widely used, metallocene-based catalysts are also used in this gas-phase process (6).

The first solution processes were introduced in the late 1950s. Currently, there are two types of solution processes commonly used for the production of ethylene copolymers. The first process used heavy solvents (C_6–C_{10} hydrocarbons) to solubilize the ethylene and polyethylene at high temperatures and pressures. The process utilizes Ziegler–Natta or metallocene catalysts. The second type of solution polymerization process uses mixtures of supercritical ethylene and molten polyethylene as the medium for ethylene copolymerization reactions. In this case, retrofitted high-pressure reactors that were used previously for producing LDPE are currently being used to produce LLDPE and VLDPE.

The slurry polymerization process is the oldest catalytic polyethylene production technology. The main disadvantage of this technology, however, lies in the fact that the LLDPE resins produced by this process exhibit high swelling even when light solvents are used. The resultant stickiness in the polymer particles significantly limits the polymer density range and production rates that can be achieved via this process. Recent developments in this process have allowed the production of broad-MWD LLDPE using light solvents such as isobutane and isopentane.

POLYMER STRUCTURE AND PROPERTIES

Properties of LLDPE and VLDPE are usually specified in terms of density (ASTM method D792) and melt index (ASTM method D1238). Density is a measure of crystallinity, and melt index is related to the polymer molecular weight (see also Polymer properties).

Density is the most important parameter governing resin properties. Polyethylene is essentially a composite material consisting of a rigid crystalline phase and an elastic amorphous phase. As crystallinity decreases with decreasing density, the product becomes softer and more pliable, clarity increases, and toughness also increases. Density is controlled by the concentration of short-chain branching (SCB), which is introduced in polyethylene resins via copolymerization with α-olefins. Comonomers widely used are 1-butene, 1-hexene, 4-methyl 1-pentene, and 1-octene. The side branches serve to disrupt the polyethylene crystals, channel polymer chains into the amorphous phase, and thus reduce overall density. The comonomer type determines the length of the side branch. The short side branches of a butene copolymer can be partially incorporated into the polymer crystal, whereas those from the higher α-olefins (HAOs) cannot. As a result, the HAO copolymer chain is likely to leave a given crystal and enter another one to form a "tie chain" that helps bind the crystals together. For this reason, HAO copolymers are generally stronger and tougher than butene copolymers.

Another important structural characteristic is the polymer chain length or molecular weight (MW) and molecular-weight distribution (MWD). It is a common practice to characterize MW by means of the melt index (MI), which bears an inverse relation with MW; thus, lower MI values correspond to higher MW. The melt-flow ratio (MFR) is a ratio of the polyethylene viscosity at two different shear rates and is an indicator of the MWD. In general, long chains are entangled with one another and entanglements contribute to the resin's strength and toughness. However, the desire for higher strength needs to be balanced against processabilty, since MW and MWD have a profound influence on the flow behavior or rheological characteristics of the molten polymer. MW controls the overall viscosity level and MWD controls how viscosity depends on shear rate—that is, its shear-thinning response. Processability, related to flow at high shear rates, is therefore a function of both MW and MWD. Most LLDPE and VLDPEs have relatively narrow MWD and show low degree of shear-thinning (see Figure 1).

When compared to LDPE (whose shear-thinning is further enhanced by the presence of long-chain branching) of a similar melt index, LLDPE and VLDPE resins tend to build up high stresses during processing at relatively low shear rates. Other consequences of their narrow MWD are low-melt elasticity and "soft" stretching flow behavior. Low-melt elasticity implies rapid relaxation of polymer chains in the melt when subject to stress. For this reason, the tendency to induce molecular orientation during processing is low, and the product physical properties are not as sensitive to processing conditions. The "soft" stretching behavior implies a low extensional viscosity that enables easier drawdown of the molten resin bubble to thin gauges. By the same token, LLDPE and VLDPE resins have low melt strength and can be sensitive to bubble instability during blown-film extrusion.

A third influential factor in the LLDPE/VLDPE properties and processing is the short-chain branching distribution (SCBD) of the polymers. In general, LLDPE resins are structurally heterogeneous. Not only is there a distribution of MW, but there is also a distribution of SCB. The SCB is not uniform across all polymer chains; some chains have many branches, while others may be essentially linear. This characteristic of heterogeneous SCBD generally contributes to thicker crystallites, higher melting point, higher stiffness, and lower optical clarity in LLDPE when compared to LDPE at the same density. The SCBD also affects the fraction of the resin that can be extracted by solvents such as hexane. This fraction, commonly referred to as the "FDA extractables," is highly branched and low in MW. Both SCBD and MWD are determined by the catalyst system and, to a lesser extent, the reactor conditions. Polyethylene produced using metallocene catalysts have a very narrow MWD as well as a much more homogeneous SCBD. This leads to very low extractable levels in the final product.

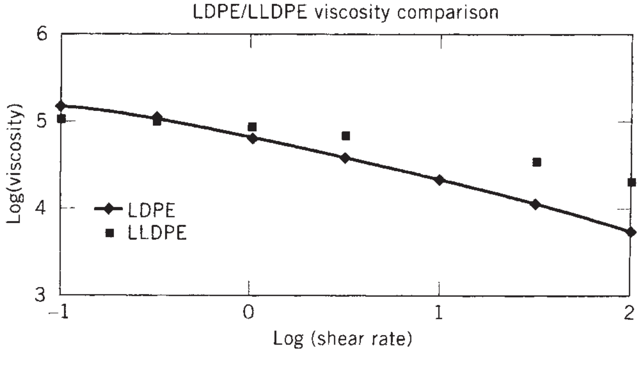

Figure 1. LDPE/LLDPE viscosity comparison.

Since VLDPE resins have lower density compared to LLDPE resins, the short-chain branching levels are higher. Conventional VLDPE resins (catalyzed by Ziegler–Natta catalysts) have high extractables, high strength, and clarity. Metallocene-catalyzed VLDPE resins, in spite of the low density, still offer the additional advantage of having very low extractable levels. This is a major advantage in medical applications where high purity is essential. Also due to the homogenous SCBD, the melting point of metallocene-catalyzed resins is significantly lower compared to conventional LLDPE and VLDPE. This leads to improved sealability in the final product.

In 2004, ~15% of LLDPE in the United States was produced using metallocene catalysts. This usage is expected to rise to ~25% by 2010. The latest addition to the catalyst family is a group of organometallics of various transition metals (6).

APPLICATIONS

LLDPE competes with LDPE for many applications, and has made significant inroads into traditional LDPE markets. This is mainly due to the significantly better downgauging potential, which allows thinner films with enhanced physical properties.

Film

Film is the largest application for LLDPE resins, greater that 55% in the United States in 2005 (6). This film has a high tensile strength and puncture resistance. The toughness and low-temperature properties of LLDPE film exceed those of conventional LDPE. The trash-bag market exceeds 700,700 t/yr: it is the largest market for LLDPE (see Table 2). Ethylene-1-butene copolymers, which are the cheapest, have a lower film strength compared to those of the high-strength ethylene-1-hexene and ethylene-1-octene copolymers. Bags for merchandise packaging manufactured from thin LLDPE film have excellent tensile strength, puncture resistance, and seal strength at thin gauges. This application includes bags on a roll, such as garment bags, laundry and dry cleaning bags, and ice bags. Several LLDPE and VLDPE films are competing for a special film market; elastic stretch film for packaging. The resins based on ethylene-1-hexene and ethylene-1-octene copolymers are particularly suited for these purposes. A significant volume of LLDPE is used for manufacturing large-size packaging for food and textiles. These bags are easily reused, take up less space, and are moisture-resistant.

Several VLDPE grades, especially those produced via metallocene catalysts, are used to prepare very clear film. High-clarity film is necessary in many packaging applications. Barrier properties and clarity are attractive properties for packaging poultry, frozen foods, and vegetables. Medical applications include film for blood bags and surgical disposable bags. Compositionally uniform LLPDE and VLDPE are especially attractive because of their sealability.

Injection Molded Products

Injection molded products is the second largest market for LLDPE. It accounted for ~7% of its consumption in 2005. Over one-half of the LLDPE consumed is used to produce housewares These housewares are stiffer and more resistant to impact and distortion at elevated temperatures than those of LDPPE. Lids for HDPE jars and containrs are made of LLDPE. They have excellent gloss and low warpage.

FABRICATION PROCESSES

As indicated in the previous section, LLDPE and VLDPE are used in a large variety of product types. Since film is the largest market segment, film extrusion is briefly summarized in the following paragraphs (7).

Film Extrusion

Polyethylene is converted from pellets into film using one of two techniques: blown- or cast-film extrusion. Depending on the end-use property requirements, the resin is either blown into a tubular film or cast into a thin flat sheet. Compared to cast films, blown films typically have higher haze, more balanced orientation, and good impact strength, and can generally achieve gauge uniformity within 10%. On the other hand, cast film tends to have better clarity and is highly oriented in the machine direction. Excellent gauge uniformity (within 3%) can be achieved by casting the film, which allows film production at very thin gauges (sometimes less than 0.5 mil). The film is quenched much sooner on cast film lines, and significantly higher extrusion rates are achieved. Some basics of film extrusion are explained below.

Table 2. Typical LLDPE/VLDPE Film Applications

Agricultural Rollstock	Ice Bags
Bakery bags	Industrial liners and sheet
Diaper backsheet	Medical packaging
Garbage bags, consumer	Newspaper bags
Garbage bags, institutional	Produce bags-on-roll
Grocery sacks	Shopping (retail) bags
Household food bags	Shrink wrap
Heavy-duty sacks	Stretch wrap

Blown Film. The process of converting pellets into blown tubular film consists of four basic steps: feed/recycle, extrusion, film blowing, and winding.

1. The feed section consists of a hopper in which virgin polymer is loaded. Usually, there is some mechanical means of blending in some recycled material. This could be either postconsumer recycle (PCR), which is mandated in some states and in some applications, or merely scrap film and edge trim that is fed through a grinder and combined into the feed stream with the virgin resin. The feed stream also may contain additives such as pigments and processing aids.

2. The function of the extruder is mainly to compress, melt, and convey the polymer to the discharge end. There are several different types of extruder screws. The original film equipment consisted of screws that were optimized for LDPE resins. When LLDPE was first introduced, it became evident that the LDPE screws would require some modification to process LLDPE, since the power efficiency was very low because of the rheological behavior of these mostly linear resins. The processing requirements of LLDPE were met by designing screws such as the barrier screw or decreasing-pitch screw that could handle a more viscous melt. By far the most commonly used screws for extruding LLDPE or LLDPE/LDPE blends are the barrier screws.

3. After the extruder, the polymer melt is forced into an annular blown-film die for extrusion into a tube. The thickness of the annular opening, the die gap, is generally between 25 and 100 mils. When processed through a narrow die gap, LLDPE resins generally require a processing aid to avoid melt fracture, a film deformity that occurs when a certain critical shear stress is exceeded. Although melt fracture does not cause film property loss (8) except at severe levels, it poses an appearance problem that can be a critical factor in several applications. After the polymer exits the die, it is drawn down in the machine and transverse directions (MD and TD) to achieve the desired film thickness. Film cooling is also an important part of the process. The frost-line height (FLH), where the polymer melt crystallizes, plays an important role in determining final film properties (9).

4. The final step consists of the buddle being flattened by collapsing frames, drawn through nip rolls and over idler rolls to a winder to produce rolls of blown film.

Cast Film. The cast-film process is similar in most aspects to the blown-film process outlined above, except in the film formation step. Here, the polymer melt exits the extruder and enters a “T” or coat-hanger die. The orientation of the die can vary depending on processing conditions. Typically, a vertically downward die is preferred. The molten polymer web is cast onto a polished roll that has an internal cooling mechanism to maintain a constant temperature. An air knife is generally used to

Table 3. Typical Properties of Commercially Available LLDPE Resins[a]

Comonomer	Butene	Standard Hexene	"Super" Hexene	Octane
Melt index (dg/min)	1.2	0.9	0.9	1.0
Density (g/mL)	0.918	0.917	0.917	0.920
MFR	24	28	25	30
Dart impact (g)	85	180	480	250
Elmendorf tear MD (g)	80	300	450	350

[a] 3.5-in. Gloucester, 2:1 BUR, 430°F, 100-mil die gap, 250 lb/h, 1.0-mil film.

press the molten polymer against the roll. Usually, two chill rolls are used to provide appropriate tension to the film. After this point, the film goes though nip rolls and into the winder to produce rolls of cast film.

Coextrusion

The reasons for using coextrusion are usually to achieve specific physical properties such as sealability, barrier, and strength. Also, there are economic benefits to using coextrusion including reduced costs (by using an inexpensive polymer in the noncritical layer) and reduced waste (by introducing a recycle layer). Coextruded film can be produced on both blown- and cast-film equipment, and involves multiple extruders feeding a single die. As many as nine-layer lines are now being used commercially, although two and three-layer lines remain the most common.

PHYSICAL PROPERTIES

Although LLDPE resins are generally considered as having superior physical properties compared to LDPE, the actual impact or tear strength is strongly dependent on the comonomer used, as well as on the melt index and density. Some key film properties that are critical for several film applications are explained below:

Dart Impact (ASTM D1709). This test measures the ability of a film to withstand the force of a falling dart, and is an indicator of film toughness. Dart impact is strongly affected by the molecular weight, density, and comonomer type.

Elmendorf Tear (ASTM D1922). The resistance to tear in either the machine direction (MD) or transverse direction (TD) is measured by this test. Typically, LLDPE films tend to have lower MD tear strength compared to TD. Since that becomes the limiting direction, only the MD tear values are often measured and reported, whereas the TD tear is not considered critical in most LLDPE film applications. Ideally, a balanced orientation, or MDT:TDT ratios close to 1.0, is desirable to maximize film performance.

Other Properties. Tensile and yield strength (ASTM D638) of the LLDPE resins are also considered critical end-use properties. Typically, the tensile strength of butene LLDPE is somewhat lower than the HAO-LLDPEs. Yield strength is primarily a function of resin-base density. Hexane and xylene extractables are also measured to ensure that the film meets FDA limits for food-packaging applications. Film blocking, the tendency of a bag to resist opening, is a function of resin-base density and MWD. Other properties such as puncture resistance, puncture propagation tear (PPT), sealability, haze, and gloss are also considered important, depending on the application.

Comonomer type plays a strong role in influencing the final film properties. In general, butene copolymers tend to have lower film strength, and they are used in low-end applications. Standard hexene copolymers show significantly improved strength properties over butene, but are not considered as strong as octene copolymers. However, a new class of "superstrength" hexene copolymers actually exceed the strength properties of standard octene copolymers. Film strength properties of some commercially available resins are shown in Table 3.

VLDPE resins generally offer much better optical properties and impact strength, due to (a) the increased level of comonomer or (b) low base density. As in the case of LLDPE, film properties vary with respect to melt index, density, and comonomer type. In general, VLDPE resins exhibit outstanding puncture resistance, flexibility, low-temperature stability, and good sealability.

The use of LLDPE in injection molding offers such advantages as higher stiffness, improved ESCR, and heat-distortion resistance, which can be coupled with higher melt indexes to provide faster cycle times and downgauged articles.

SAFETY AND HEALTH

Polyethylene is one of the most inert polymers and constitutes no hazard in normal handling (resin suppliers will provide Material Safety Data Sheets on request). It is generally recognized as a safe packaging material by the FDA. Resin suppliers will state which of their products comply with regulations governing polyethylenes used in food-contact applications.

LLDPE can present a certain health hazard when burned because smoke, fumes, and toxic decompositon products can be formed in the process.

BIBLIOGRAPHY

V. Firdalis and P. P. Tong, "Polyethylene, Linear and Very Low-Density (LLDPE and VLDPE)" in *The Wiley Encyclopedia of*

Packaging, 2nd edition, John Wiley & Sons, New York, 1997, pp. 748–752.

Cited Publications

1. *Year End Resin Statistics*, American Chemistry Council, December 2007.
2. A. Borruso, “Linear Low-density Polyethylene (LLDPE) Resins,” in *Chemical Economics Handbook,* SRI Consulting, Menlo Park, CA, July 2007.
3. A. W. Anderson, U.S. Patent 4,076,698 (1978).
4. W. Kaminsky and H. Hahnsen, U.S. Patent 4,545,762 (1985).
5. B. A. Krensel, Y. V. Kissin, V. I. Kleiner, and L. L. Stotskaya, *Polymers and Copolymers of Higher Alpha-Olefins*, Hanser Publishing, Dublin, NH.
6. Y. Kissin, “Polyethylene, Linear and Low Density, (LLDPE)” in *Kirk–Othmer Encyclopedia of Chemical Technology*, Vol. 20, 5th edition, John Wiley & Sons, Hoboken, NJ, 2006.
7. *Film Extrusion Manual*, TAPPI Press, Norcross, GA, 1992.
8. V. Firdaus and P. P. Tong, *SPE 1993 ANTEC Proceedings*, p. 2550.
9. P. P. Shirodkar, V. Firdaus, and H. Fruitwala, *SPE 1994 ANTEC Proceedings*, p. 211.

POLYETHYLENE, LOW-DENSITY

Norma J. Marashin
Union Carbide Corporation,
Bound Brook New Jersey
Updated by Staff

INTRODUCTION

Polyethylene is a thermoplastic polymer formed from the polymerization of ethylene. It is available in a variety of molecular weights and densities, which have been tailored to specific end-use markets. ASTM has divided polyethylene into four general categories according to density:

Type	Nominal Density (g/mL)
I	0.910–0.925
II	0.926–0.940
III	0.941–0.959
IV	≥ 0.960

In general, the polyethylene industry does not always follow these designations but has broken polyethylene into two broader categories: high-density polyethylene (HDPE), density ≥ 0.940; and low-density polyethylene (LDPE), density 0.915–0.939. There is also now a type of polyethylene, very low-density polyethylene (VLDPE), with densities of <0.915. Dow Chemical offers VLDPEs under the trade name ATTANE and polyethylene with densities of 0.895–0.913 under the trade name FLEXOMER.

Low-density polyethylene was first produced in England in 1933 by Imperial Chemical Industries laboratories, when ethylene gas was compressed to high pressures and heated to high temperatures (1). ICI’s development of a commercial process for the manufacture of LDPE was closely followed by the wartime use of the product in critical areas such as high-frequency cables for ground- and airborne radar equipment.

In the early 1950s, another type of polyethylene, HDPE, was commercially introduced by several companies who had developed new low-pressure processes for its production (2). HDPE is a linear polymer without any of the long-chain branching characteristics of LDPE. Because of its different structure, HDPE possessed properties different from and complementary to those of LDPE and was quickly utilized in many new packaging applications. These two polyethylenes—differentiated with respect to density, properties, and manufacturing processes—coexisted and grew until the early 1960s, when a third type of polyethylene, LLDPE, was introduced. Because the molecular structure of this new type of LDPE was more similar to that of HDPE, the term *l*inear *l*ow-*d*ensity *p*olyethylene (LLDPE) was coined. Therefore, the polyethylene industry today is composed of three types of polyethylene: HDPE, LDPE (sometimes also referred to as high-pressure LDPE or HP-LDPE), and LLDPE. There is some confusion in the terminology used for LDPE and LLDPE. In some articles and publications, LDPE is used as a generic term for polyethylene below 0.935, thus covering both HP-LDPE and LLDPE. In other cases, LDPE is used to cover only HP-LDPE and LLDPE is a separate category of polymer. In this article, the second type of categorization is used. LLDPE is treated as a separate type of polyethylene and referred to only as LLDPE, while LDPE covers only low-density polyethylene produced by the high-pressure process. When written out (low-density polyethylene), both LDPE and HP-LDPE are included. LLDPE has made inroads in many of the markets currently served by LDPE and, in addition, is competing with HDPE in some new applications.

However, by the late 1980s, the penetration of LDPE markets by LLDPE appeared to be leveling off and LLDPE producers looked for new technology to regain momentum. The early 1990s saw an exciting explosion of new low-pressure, low-density PE products and technology designed to address some of the deficiencies of LLDPE compared to LDPE. For example, Phillips Petroleum announced LDLPE (*l*ow-*d*ensity *l*inear *PE*) and claimed that it was easier to process than conventional LLDPE (3). Union Carbide Corp. announced Unipol II, a technology that would be capable of making low-pressure products that were true “drop-ins” for conventional, commodity LDPE products (4). Himont built a new U.S. Gulf Coast facility to utilize its Spherilene process, which is claimed to produce polyethylene resins in spherical form directly from the reactor (5). The development of single-site catalyst technology that could make polyethylene homo-, co-, or terpolymers from 0.865 to 0.96 density was reported (6, 7). By early 1995, most major polyethylene producers began using metallocene or single-site programs and many had formed joint ventures to commercialize the products. At present, post-metallocene catalysts are being developed. Salicylaldimine complexes of group IV metals may show higher activity and the possibility of further refinement of molecular structure.

CHARACTERIZATION OF POLYETHYLENE

The properties of products made from polyethylene are dependent on some basic characteristics of polyethylene itself. Several of the terms commonly used to describe polyethylene are discussed in the following paragraphs.

Melt Index

The melt index (MI) of a polymer is used as an empirical measure of its molecular weight. To measure melt index according to ASTM D1238, a polymer sample is melted and forced through a small orifice of fixed size under a fixed pressure. The weight of polymer that is extruded in 10 min under 44 psi (303 kPa) of pressure is called the *melt index*. When the pressure is increased to 440 psi (3030 kPa), the weight of polymer extruded in 10 min is the *flow index* (FI). Since a polymer with very high molecular weight will be very viscous and resistant to flow, it will not pass through the small orifice quickly and the weight obtained in 10 min (or melt index) will be low. Melt index is therefore inversely proportional to molecular weight. Typical low-density polyethylene melt indices range from 0.2 to over 150 dg/min. In general, products in the lower-melt-index range are used for film extrusion and the higher-melt-index products for molding and extrusion coating. Within any fabrication process, the use of a lower-melt-index resin will result in a stronger product, although usually with some sacrifice in extrudability.

Melt-Flow Ratio

The melt-flow ratio (MFR) is a rough estimate of the molecular-weight distribution (MWD) of a resin. Since all polymer chains in a given resin are not exactly the same length, an MWD measurement will describe how dissimilar the chains are from each other. Melt-flow ratio is the ratio of the flow index to the melt index. The higher the ratio, the broader the molecular-weight distribution and the more dissimilar the chains are from each other. A polymer with every chain exactly the same length would have a very narrow molecular-weight distribution and a very low melt-flow ratio. Melt-flow ratios of commercial low-density polyethylenes vary from about 20 (very narrow) to about 100 (very broad). Polymers with narrow molecular-weight distributions give stronger products, but are more difficult to extrude than those with broad molecular-weight distributions.

Density

The density of a polymer is a measure of its crystallinity. Density measured according to ASTM D1505 consists of taking a small sample of polymer that has been molded in a carefully prescribed manner and dropping it into columns with solutions of different viscosities. The position of the unknown polymer is the column is then compared to standard samples of known density. The density of a film or molded article is only partly controlled by the density of the resin used to make the product. The rate at which the product is cooled also plays an important role. The faster a film or molded article is cooled, the less time there is for the polymer chains to crystallize and the lower the density of the final product. For example, the density of a sample cut from a blow-molded polyethylene bottle was 0.945 g/mL. The same polyethylene resin, when compression-molded into a plaque and cooled according to ASTM D1505, measured 0.954 g/mL. Product properties such as stiffness, rigidity, environmental stress-crack resistance (ESCR), and moisture vapor transmission rate (MVTR) are affected by density. The lower the density of a product, the more limp and flexible it is. A 0.918-g/mL polyethylene product will have better ESCR and higher MVTR than a product with a density of 0.930 g/mL.

LDPE PROCESS

LDPE is made by the high-pressure polymerization of ethylene (2, 8). In either a tubular or autoclave reactor, ethylene is pressurized to more than 20,000 psi (138 MPa) and heated to $>150\,^{\circ}\mathrm{C}$. Small amounts of an initiator, typically oxygen or peroxide, are added to start the polymerization process. Comonomers such as vinyl acetate or ethyl acrylate can be added to make EVA and EEA copolymers, respectively. Critical molecular characteristics such as molecular weight, molecular-weight distribution, and density are controlled by reaction temperature, ethylene pressure, and the concentration of chain-transfer agents. Constraints on the viscosity of the polymer solution in the reactor limit the rate at which products with high molecular weight and/or high density can be made in the high-pressure process. It has been found that the tubular high-pressure process gives products that differ subtly in the type and degree of branching from products made in the autoclave process. Density depression occurs in all types of polyethylene because of the presence of short branches along the backbone of the polyethylene chain. These short branches, typically one to five carbon atoms long, prevent the long polyethylene chains from folding together and forming crystals. However, early in the development of LDPE, it was found that the presence of these short branches did not totally explain some of the rheological properties of LDPE. It was then hypothesized and proved that LDPE also contains low levels of long-chain branching (9). These long chains, which can be over 1000 carbon atoms in length, have a very small effect on the density of LDPE but have major impact on the processing and properties of LDPE (Figure 1). The tubular reactor makes LDPE with a large number of long-chain branches. The branches are of relatively short length, however. The autoclave reactor, on the other hand, gives products with low levels of long-chain branches of extremely long length. Because of the difference in long-chain branch type and frequency, some specialization in product applications has occurred with these products. The autoclave reactors produces products that are especially useful

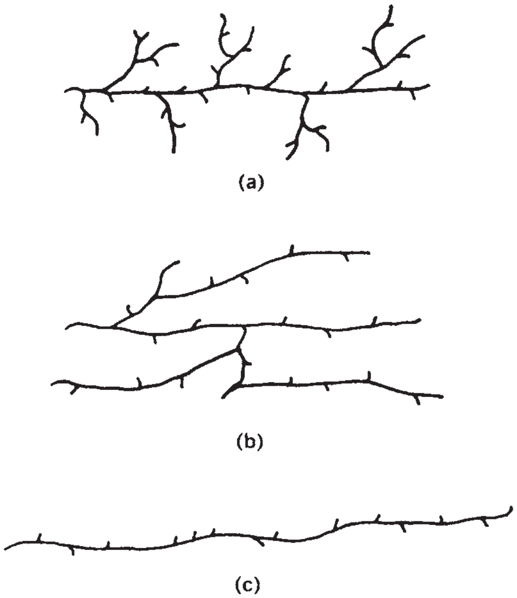

Figure 1. Molecular structures for LLDPE and HP-LDPE: (**a**) HP-tubular process; (**b**) HP-autoclave processes; (**c**) LLDPE.

in high-speed extrusion coating and in film applications requiring toughness. The tubular reactor gives products with optimal clarity and processing characteristics.

LLDPE PROCESS

Low-pressure processes for the polymerization of ethylene were developed in the 1950s (2, 8). These processes used organometallic catalysts to polymerize ethylene to form HDPE at moderate pressures (approximately 300 psi) and temperatures (approximately 100–200 °C). Three basic types of low pressure systems developed: *solution*, where the polymer was completely dissolved in a solvent at high temperatures; *slurry*, where the solid polymer particles were physically suspended in a solvent at lower temperatures; and *gas phase*, where the solid polymer was in contact with only the polymerization gases. Again, because of process constraints in the reactor, molecular weights and densities were thought to be limited, especially in the solution and slurry systems. The density limitations of the low-pressure and high-pressure processes were thought to form incompatible regions, with the low-pressure process making polythylenes above 0.935 density and the high-pressure process making polyethylene below 0.935 density.

The first commercial production of LLDPE was made in a solution process by DuPont Canada in 1960 (10). A large market for this new polymer did not develop until 1977, when Union Carbide started licensing their gas-phase process for the manufacture of linear low-density polyethylene. Since that time, several other polyethylene manufacturers have announced the conversion of low-pressure HDPE processes or even high-pressure LDPE processes to make LLDPE and some of these processes are available for licensing.

The structure of these new linear low-density polymers is very different from the LDPE made from the high-pressure process. In LLDPE, there is no long-chain branching. Density is controlled by the addition of comonomers such as butene, hexene, or octene to the ethylene. These comonomers give rise to short-chain branches of different lengths, two carbon atoms for butene, four for hexene, and six for octene. The length of the short-chain branches determines some of the strength characteristics of LLDPE. The absence of long-chain branches in LLDPE plays a significant role in the difference in extrusion characteristics between LLDPE and LDPE, as discussed in the sections on specific application areas.

LOW-DENSITY POLYETHYLENE PROPERTIES

Low-density polyethylene is one of the most widely used packaging materials in the market. Its utility in a variety of different applications is due not to some single outstanding property or characteristic, but usually to a combination of properties. The low price of polyethylene compared to wood, metal, and other polymers has accelerated its penetration into many applications. In addition to the low cost of polyethylene, the excellent toughness, flexibility, moisture barrier, chemical resistance, electrical insulation, and light weight of polyethylene films, bottles, pipes, cables, and other articles make them superior to articles made from conventional materials of construction. Since the introduction of LLDPE into the market, the superior properties of LLDPE have led to its use in new applications for polyethylene as well as the replacement of LDPE and/or HDPE in some areas. Compared to LDPE, LLDPE at the same melt index and density offers better toughness, rigidity, stress-crack resistance, elongation, melting point, and moisture barriers. (See article on polymer properties for more details.)

MARKETS/APPLICATIONS

Low-density polyethylene was the first thermoplastic polyolefin used commercially. The free-radical initiated polymerization process leads to a polymer with large amounts of long chain branching. This imparts an unusual rheological behavior in both shear and extension. LDPE is used in a variety of applications such as film, coating, molding, and wire and cable insulation.

The global market for polyethylene is undergoing extensive changes. Increases are concentrated in China and the Middle East. Consumption growth of LDPE is rather strong, despite the fact that a decline was expected with the advent of LLDPE to the market (11).

In 2006, 7.853×10^6 lb of LDPE were produced in the United States (12). Film applications are by far the largest market for LDPE, accounting for 55% of world use in 2006. Film demand is split between packaging and nonpacking uses. Extrusion coating is the second largest market for LDPE accounting for 9.9% of total in 2006.

Film and Sheet

About 50% of all the low-density polyethylene used in the world today goes into the film and sheet area. These applications include garbage bags, grocery sacks, garment bags, heavy-duty sacks, shrink film, stretch film, carrier film, pond liners, construction and agricultural film, and food packaging. Food applications include packaging for baked goods, dairy products, frozen food, meat and poultry, cookies, and candy. Polyethylene used in the film area range in melt index from 0.2 to 6 and in density from 0.915 to 0.935. The advantages of LDPE/LLDPE include low cost, flexibility, toughness, and chemical- and moisture-barrier properties (Tables 1–3). This has been the market most rapidly penetrated by LLDPE in the United States. This rapid penetration is due, in part, to the outstanding physical properties of LLDPE film (Table 4). Dart drop and Elmendorf tear measure the toughness of film in a high-speed test and give an indication of the failure behavior of film under catastrophic conditions. Puncture and tensile tests are done at relatively slow speeds and give an indication of intrinsic properties and failure modes that can occur with long-term use.

The differences in molecular structure between LLDPE and LDPE (linear vs branched molecules and molecular-weight distributions) affect the rheology of the two materials. LLDPE is more viscous at extrusion shear rates and requires more power to extrude. In addition, it is necessary to use a wide dip gap to avoid melt fracture when extruding 100% LLDPE. Therefore, in the early days of LLDPE introduction, minor modifications to the screw and die gap had to be made in order to extrude LLDPE on extruders designed for HP-LDPE and obtain optimum film properties Most extruders today have been designed to handle the different rheology of LLDPE, and such modifications are not necessary. In addition, there are additives now available that allow the extrusion of conventional LLDPE through narrow die gaps without melt fracture. The new generation of LLDPE film products, designed to be “drop-in” for LDPE products, will not require any modifications to extrusion equipment.

LDPE remais the resin of choice for shrink wrap and clarity films (13).

Injection Molding

This market includes lids, buckets, wash basins, housewares, toys, freezer containers, and general housewares. The advantages of low-density polyethylene include good low-temperature properties, low cost, light weight, and flexibility (Table 5). Low-density polyethylene in the melt-index range of 2–150 and density range of 0.920–0.930 is commonly used in injection-molding applications. LLDPE has made significant penetration into certain markets such as lids and housewares, where property advantages, such as higher stiffness and improved environmental stress-crack resistance and heat-distortion resistance, can be coupled with higher melt indices to result in faster cycle times and downgauged articles (Table 6) (14).

Extrusion Coating

In this application, polyethylene is used as a coating on another material such as paper, aluminum foil, and cardboard. These coated products are used for liquid packaging, such as milk and juice, and for the new aseptic packages of nonrefrigerated juices. The polyethylene serves as an adhesive, moisture barrier, seal layer, printable surface, and/or barrier to tear. Because of its molecular structure, that is, the type of long chain branching, polyethylene made in tbe high-pressure autoclave reactor is the most successful in this market. Resins with melt indices of 4–10 and densities of 0.920–0.930 are commonly used. Because of its linear structure, LLDPE has not penetrated the extrusion coating market, except as blends with LDPE.

Blow Molding

High-density polyethylene is the preferred material for this market because of its rigidity and barrier properties.

Table 1. HP-LDPE Homopolymer Film Resins

Type:	HP-LDPE	HP-LDPE	HP-LDPE	HP-LDPE	HP-LDPE	HP-LDPE
Comonomer:	None	None	None	None	None	None
Melt index:	0.2–0.8	1.5–2.0	1.5–2.0	1.2–2.0	1.0–2.0	5.0–10.0
Density (g/cm^3):	0.919–0.923	0.922–0.925	0.930–0.935	0.918–0.924	0.923–0.927	0.917–0.930
Molecular-weight distribution:	Broad	Broad	Broad	Broad	Broad	Broad
Process:	Blown	Blown	Blown and/or cast	Blown	Cast	Cast
Applications:	Shipping sacks; heavy-duty applications	Bread and bakery; general-purpose packaging	Overwrap	General-purpose packaging	Bread and bakery; general-purpose packaging	Extrusion coating
Critical properties:	Toughness	Clarity	Clarity; stiffness	Extrudability; toughness	Extrudability; good tear	Drawdown adhesion; pinhole resistance

Table 2. HP-LDPE Copolymer Film Resins

Type:	HP-LDPE	HP-LDPE	HP-LDPE	HP-LDPE
Comonomer:	2–5% VA[a]	3–5% VA[a]	7% VA[a]	15–18% EA[b]
Melt index:	1.5–2.0	0.2–0.4	0.2–4.0	2.0–6.0
Density (g/cm^3):	0.925–0.930	0.923–0.927	0.927–0.945	0.927–0.940
Molecular-weight distribution:	Broad	Broad	Broad	Broad
Process:	Blown	Blown	Blown; extrusion coating	Blown; extrusion coating
Applications:	Frozen food	Ice bags	Sealing layer; liquid packaging	Disposable gloves; ID cards
Critical properties:	Clarity; low-temperature properties	Low-temperature properties	Adhesion; low-temperature properties	Low stiffness; adhesion to polar substrates

[a] Vinyl acetate.
[b] Ethyl acrylate.

Low-density polyethylene may be used in those segments where flexibility and excellent stress-crack resistance are required, such as squeeze bottles, toys, and drum liners. Fractional-melt-index polyethylene (density 0.920–0.935) is typically used in this market. LLDPE offers better stiffness and improved stress-crack resistance compared to LDPE.

SAFETY AND HEALTH

Polyethylene is generally recognized as a safe packaging material by the Food and Drug Administration. Resin suppliers will state which of their resins comply with regulations governing polyethylenes used in food-contact applications. These regulations are covered in the U.S. Food, Drug, and Cosmetic Act as amended under Food Additive Regulation 21 *CFR* 177.1520. Polyethylene is a very stable polymer. However, proper material handling procedures are required to control dust and smoke and to provide adequate ventilation during extrusion. Copolymers containing EEA, EMA, and EVA should be used selectively on food contact applications. Resin suppliers will provide Material Safety Data Sheets and Materials Handling Guides for polyethylene resins on request.

Table 3. LLDPE Film Resins

Type:	LLDPE	LLDPE	LLDPE	LLDPE	LLDPE
Comonomer:	Butene	Hexene; octene	Hexene; octene	Hexene; octene	Hexene; octene
Melt index:	0.8–2.5	2.0–4.0	2.0–5.0	0.7–1.5	0.8–1.5
Density (g/cm^3):	0.917–0.922	0.912–0.919	0.928–0.935	0.924–0.928	0.917–0.923
Molecular-weight distribution:	Narrow	Narrow	Narrow	Narrow	Narrow
Process:	Blown	Cast	Cast	Blown	Blown
Applications:	General-purpose packaging	Stretch wrap	Bread and bakery; overwrap	Grocery sack	Blending; ice bags
Critical properties:	Extrudability; toughness	Puncture and tear resistance	Stiffness; moisture barrier	Stiffness; tear resistance	Excellent toughness; Low-temperature properties

Table 4. Blown-Film Properties[a] of LLDPE and HP-LDPE

Property:	ASTM test		HP-LDPE	HP-LDPE	LLDPE	LLDPE	LLDPE
Melt index:			2.5	0.2	1.0	1.0	1.0
Density (g/cm^3):			0.921	0.923	0.918	0.918	0.920
Comonomer:			None	None	Butene	Hexene	Octene
Dart drop, gf/mil (N/mm):	D1709		0.75 (29)	185 (71.4)	100 (38.6)	200 (77.2)	250 (96.5)
Puncture energy, in. · lbf/mil (kJ/m):			6 (26.7)	5 (22.2)	16 (71.2)	17 75.6)	
Elmendorf tear, gf/mil (N/mm):	D1922	MD	160 (61.8)	90 (34.7)	140 (54)	340 (131.2)	370 (142.8)
		XD	110 (42.5)	100 (38.6)	340 (131.2)	585 (225.8)	800 (308.8)
Tensile strength, psi (MPa):	D882	MD	2900 (20)	2800 (19.3)	5000 (34.5)	5200 (35.9)	6500 (44.8)
		XD	2700 (18.6)	3000 (20.7)	3800 (26.2)	4700 (32.4)	5100 (35.2)
Tensile impact strength, ft · lbf/in. (MPa):		MD	440 (36.4)	500 (41.4)	1200 (99.3)	1930 (159.7)	
		XD	650 (53.8)	1050 (86.9)	900 (74.5)	1760 (145.6)	

[a] All properties measured on 1.5-mil (38-μm) film produced at 2:1 blowup ratio.

Table 5. HP-LDPE and LLDPE Molding Resins

Type:	HP-LDPE	HP-LDPE	HP-LDPE	LLDPE	LLDPE	LLDPE
Melt index:	6–10	15–25	35–50	0.8–1.2	12–30	50–150
Density (g/cm^3):	0.924–0.926	0.914–0.918	0.923–0.925	0.918–0.922	0.920–0.926	0.926–0.935
Molecular-weight distribution:	Broad	Narrow	Narrow	Broad	Narrow	Narrow
Process[a]:	IM	IM, BM, PE	IM	BM, IM, PE	IM	IM
Applications:	Bottle closures	Drug bottles; aseptic packaging	Lids	Drum liners; irrigation tubing; spouts	Industrial containers; Speciality housewares	Lids; housewares
Critical properties:	ESCR;[b] stiffness	ESCR;[b] low modulus	Cycle time	ESCR;[b] processability	ESCR;[b] low-temperature impact	Cycle time

[a] Key; IM, injection molding; BM, blow molding; PE, profile extrusion.

[b] ESCR, environmental stress-crack resistance.

Table 6. Comparison of LLDPE and HP-LDPE Molded Properties

Type:	LLDPE	LLDPE	LLDPE	HP-LDPE	HP-LDPE
Melt index:	20	50	100	23	49
Density (g/cm^3):	0.924	0.926	0.931	0.924	0.924
Dishpan impact, ft · lbf (J) at – 20 °C:	30 (40.7)	24 (32.5)	3 (4.1)	9 (12.2)	3 (4.1)
Failure mode:	Ductile	Ductile	Ductile	Shatter	Shatter
ESCR[a] ($F_{50}h$)[b]:	150	3	<2	<1[c]	

[a] Environmental stress-crack resistance.

[b] At 50 °C, 100% Igepal, no slit, ASTM D1693.

[c] $F_{100}h$.

ENVIRONMENTAL IMPACT

In recent years there has been quite a bit of adverse publicity around the use of plastics and the impact of litter on the environment. In the 1980s, the decision of fast food restauraants to discontinue the use of the expanded polystyrene clamshell burger container is one example of how plastics growth and use can be changed by public opinion. Many U.S. states have considered or passed regulations specifying the amount of recycled plastic that must be incorporated into new plastic articles. This has had a large impact on the polyethylene industry since polyethylene, including LDPE, is one of the more recyclable plastics being used today. The recycling effort has been hampered by the higher cost of collecting, separating, and cleaning the polyethylene containers compared to the cost of the virgin polymer.

Photo- and biodgradable LDPE copolymers have been offered as a solution to the litter problem. LDPE copolymers containing carbon monoxide have been produced. These photodegradable copolymers have been used to make beverage carrier rings, but have not been used in other commodity applications. The search for a biodegradable LDPE continues. Blends of starch-like fillers improve biodegradation, but at a significant sacrifice of physical properties. A new biodegradable/compostable technology has been developed, such that biodegradability can be triggered by heat, light, or stress. Products made with this technology are being marketed in Europe and South America (13).

BIBLIOGRAPHY

Norma J. Maraschin, “Polyethylene, Low-Density” in the *Wiley Encyclopedia of Packaging,* 2nd edition, John Wiley & Sons, New York, 1997, pp. 752–758.

Cited Publications

1. British Patent 471,590 (September 6, 1937) and U.S. Patent 2,153,553 (April 11, 1933), E. W. Fawcett and coworkers (to ICI, Ltd.).
2. A. Renfrew and P. Morgan, eds., *Polyethylene*, Interscience Publishers, New York, 1960, Chapter 2.
3. *Chem. Week*, 12 (May 5, 1993).
4. *Plast. News*, 22 (March 8, 1993).
5. *Chem. Week*, 8 (June 12, 1991).
6. *Chem. Market. Reporter*, 5 (December 23, 1991).
7. *Chem. Eng. News*, 20 (September 18, 1989).
8. R. A. V. Raff and J. B. Allison, *Polyethylene*, Interscience Publishers, New York, 1956, Chapter 3.
9. J. J. Fox and A. E. Martin, *Proc. Roy. Soc. London Ser.* A **175**, 211, 216 (1940).
10. A. W. Anderson, U.S. Patent 4,076,698 (to E. I. DuPont de Nemours & Co., Inc.), February 28, 1978.
11. A. Borruso, “Low-Density Polyethylene Resins,” *Chemical Economics Handbook,* SRI Consulting. Menlo Park, CA, Oct. 2007.
12. *Year End Statistics,* American Chemistry Council, December 2007.
13. N. J. Maraschin, “Polyethylene, Low-Density” in *Kirk-Othmer Encyclopedia of Chemical Technology*, 5th edition, Vol. 20, John Wiley & Sons, Hoboken, NJ, 2006.

POLYMER PROPERTIES

Ruben J. Hernandez
Michigan State University, East Lansing, Michigan

The properties of a polymer result from its chemical nature, morphology, formulation, processing, and even use conditions. Intrinsic polymer properties depend primarily on the chemical nature of the polymer; but since most polymers are polymorphic materials, their intrinsic properties may also depend on the polymer's morphology. Morphological changes at room temperature, however, are very slow and highly time-dependent. Formulation (compounding with additives) and processing have a direct impact in the final properties of a polymeric material. Furthermore, storage and use conditions (e.g., humidity and aging) may affect a plastic's performance.

Intrinsic properties of a polymer can be classified as either molecular or bulk. Intrinsic molecular properties depend mainly on the chemical structure of the polymer's constitutional units and, to a lesser degree, on its macromolecular character. The chemical nature of a constitutional unit, which results from the type and number of atoms, existing side groups, charge distribution, and type of secondary molecular forces, controls important properties. These properties are cohesive energy, molecular packing density, molecular relaxation (including glass-transition temperature), barrier, mechanical strength, frictional forces, surface tension, and adhesion characteristics. In PE, for example, the $–CH_2–$ group yields a set of properties values quite different from the constitutional unit $–OC(CH_2)_5NH–$ of nylon 6. The latter unit is larger and more polar than the first, and it tends to develop strong intermolecular hydrogen bonding.

Intrinsic bulk properties such as stiffness, melting temperature, heat-sealing temperature range, melt-flow index, and viscosity are largely influenced by the molecular mass and distribution, as well as the architecture of the polymer chain. Molecular mass and molecular distribution include the average molecular mass, dispersion index, and single- or multimodal distribution. The "architecture" of a polymer refers to the monomers layout in the polymer chain. In this respect, polymers can be linear, branched, or crosslinked, have different tacticity (e.g., atactic, isotactic, and syndiotactic polypropylene), and show various copolymer arrangements such as random, block, alternating, or graft.

Phase morphology affects, in varying degrees, the physical, mechanical, and optical properties of a polymer. Polymers can be isotropic (amorphous); that is, they are glassy (hard and brittle) below the glass-transition temperature and are rubber-like (soft and elastic) above it. As temperature increases, amorphous polymers become true liquids without any thermodynamic discontinuity. Polymers that are nonisotropic can crystallize in several arrangements; even two different crystal structures can coexist, depending on the values of temperature and pressure. Sometimes a crystalline polymer remains a liquid below the melting temperature, thus producing a supercooled material. In semicrystalline polymers, crystalline and noncrystalline regions may coexist, forming microcrystalline or paracrystalline regions. Polymers may also have a one- or a two-dimensional molecular order in the liquid state that forms thermotropic or lyotropic liquid crystalline mesophases. A simple example of how the morphology affects the properties is illustrated by the density of PE; the density of PE may range from 0.90 to 0.97 g/mL as the percent of crystallinity increases. Besides density, there are other properties proportional to the degree of crystallinity: rigidity, heat resistance, barrier, abrasion resistance, gloss, shrinkage, and parting-line difference. However, stress-crack resistance, clarity, folding endurance, impact strength, and parison sag decrease as crystallinity increases.

Process operation, on the other hand, can alter the morphology of a material. Film orientation, for instance, directly affects the polymer morphology by producing a slightly more compact molecular packing and a more transparent film. Similarly, a rapid cooling process will increase the amorphousness of a supercooled phase, while slow cooling will increase crystallinity. Thus, process conditions may affect properties such as the heat of fusion of a material and may also affect operations such as thermoforming operation and heat sealing. Since transparency (or opacity) is directly controlled by the crystallinity, morphological changes can influence the optical properties of a polymer. When additives are incorporated into a resin, however, they can substantially alter the resin's original properties.

DETERMINATION OF POLYMER PROPERTIES

Polymer properties can be measured experimentally (usually according to standardized methods) or be estimated from semiempirical correlations. Many intrinsic properties related to the molar constitutional unit can be estimated from group contributions or increment methods. Some polymer properties that can be estimated by group contribution include density, thermal expansion coefficient, thermal conductivity, specific heat, specific entropy of fusion, melting temperature, glass-transition temperature, cohesive-energy density, solubility parameter, surface tension, viscosity coefficient, dielectric constant, magnetic susceptibility, specific shear modulus, specific bulk modulus, and sound velocity (1).

The most common properties of polymers related to packaging applications are described next. For easy reference they are grouped under these headings: (1) density and thermophysical properties, (2) mechanical properties, (3) solubility and degradation properties, (4) barrier properties, (5) surface and adhesion properties, (6) electrical properties, and (7) optical-appearance properties.

DENSITY AND THERMOPHYSICAL PROPERTIES

Density. The density of a plastic is directly proportional to its crystallinity: $d = d_a + C(d_c - d_a)/100$, where d is the density, C is percent volumetric crystallinity, and d_a and

d_c are the amorphous and crystalline density, respectively. For example, $d_a = 0.855$ g/mL while $d_c = 1.0$ g/mL for PE (2). Polymer density values vary from 0.87 g/mL for polypropylene up to 1.86 g/mL for PVDC (3). The standard ASTM D1505 (4) describes the density gradient method to evaluate the density of films and resins.

Glass-Transition Temperature. The glass-transition temperature T_g, which is actually a relaxation temperature, is an important property in amorphous polymers. As a relaxation temperature, T_g is associated with the onset of the rotation and mobility of chain segments involving several monomers. Rather than a single-point temperature, T_g in semicrystalline polymers is a range of temperature values. The broadness of this range depends on the sample morphology. When the polymer is at a temperature below T_g, it becomes glassy and stiff, while above T_g it shows a plastic or rubbery behavior (5). The T_g values for polymers range from about -25°C (-125°C is also commonly reported) in polyethylene to 365°C for thermoplastic polyimide (1, 6). Both the T_g and the melting temperature set the application temperature range of a plastic container. For instance, a polypropylene container may become brittle at freezing temperature if its T_g is near 0°C; "crystal" polystyrene is brittle at room temperature because it has a T_g of $\sim 80^\circ$C and does not contain plasticizer. On the other hand, a container made of a low-melting-temperature (T_m) plastic will soften if heat-sterilized. Both differential thermal analysis (DTA) and differential scanning calorimetry (DSC) are used to determine T_m and T_g (these methods are described in ASTM D3418). Van Krevelen (1) showed that polymers have T_g/T_m ratios ranging from 0.5 to 0.76. Most polymers, however, have the T_g/T_m ratio centered at 0.67.

Heat Capacity. Heat capacity (or specific heat), c, is the amount of energy needed to change a unit of mass of a material one degree of temperature. The heat capacity of plastics, which are obtained at constant pressure, are temperature-dependent, especially near the glass-transition temperature. In a semicrystalline polymer, the heat capacity of the amorphous phase is greater than the heat capacity of the crystalline phase implying that the c values depend on the percent of polymer's crystallinity. The heat capacity values of polymers at 25°C vary from 0.9 to 1.6 J/(g · K) for amorphous polymers and from 0.96 to 2.3 J/(g · K) for crystalline polymers. Reliable data of the heat capacity of amorphous and crystalline phases are available for only a limited number of polymers (1, 2). Values of c for polymers can be found in the review by Wunderlich (7). The usual techniques to measure c are differential thermal analysis (DTA) and differential scanning calorimetry (DSC).

Heat of Fusion. The heat of fusion, ΔHm, is the energy involved during the formation and melting of crystalline regions. For semicrystalline polymers, the heat of fusion is proportional to the percent of crystallinity. Amorphous polymers or amorphous polymer regions do not have heat of crystallization, since amorphous structures have a smooth transition from the liquid amorphous state to the liquid state. Experimental values of crystalline heat of fusion for common packaging plastics vary from 8.2 kJ/mol for polyethylene to 43 kJ/mol for nylon 6,6 (1). ASTM D3417 describes a method for measuring the heat of fusion and crystallization of a polymer by differential scanning calorimetry (DSC).

Melting Temperature. The melting temperature T_m is a true transition temperature. This means that at T_m both the liquid and solid phases have the same free-energy value. Most semicrystalline polymers, instead of having a sharp melting point, show a melting temperature range, and for amorphous polymers there is no T_m. Similar to T_g, T_m can be estimated from contribution groups and empirical relationships between T_g and T_m (as indicated above). Values of T_m range from as low as 275 K (for polyisobutylene), to up to 728 K (for polyethylene terephthalamide) (1, 6). ASTM D2117 and D3418 describe methods for measuring T_m.

Thermal Conductivity. Thermal conductivity k is the parameter in Fourier's law relating the flow of heat to the temperature gradient. In practical terms, k is a measure of the ability of a material to conduct heat. The thermal conductivity of a polymer is the amount of heat conducted through a unit of thickness per unit area, unit time, and degree of temperature. Thermal conductivity values control the heat-transfer process in applications such as plastic processing, heat sealing, cooling and heating a package, and sterilization processes. The k values for plastics are much lower than those for metals; for instance, thermal conductivity for plastics ranges from 3×10^{-4} for PP to 12×10^{-4} cal/(s · cm · °C) for HDPE, while for aluminum $k = 0.3$ cal/(s · cm · °C) and for steel $k = 0.08$ cal/(s · cm · °C) (8). Plastic foams show k values much lower than those for the nonfoamed plastics because of the presence of air trapped within the cellular structure. Enhanced by low thermal conductivity of air, foams make excellent insulating materials and good cushioning packaging materials. Plastic fillers may increase the thermal conductivity of plastics. Methods for measuring k are given in ASTM D4351, C518, and C177.

Thermal Expansion. The coefficient of linear (or volume) thermal expansion is the change of length (volume) per unit of length (volume) per degree of temperature change at constant pressure: $\beta = (1/L)(dL/dT)$ and $\alpha = (1/V)(dV/dT)$. Units of α and β are K^{-1} or $^\circ F^{-1}$ (reciprocal degrees Kelvin and Fahrenheit). Compared to other materials, polymers have high values of thermal expansion coefficients. While metals and glass have values in the range 0.9–2.2 K^{-1} polymers range from 5.0 to 12.4 K^{-1} (8). Thermal expansion coefficients can be measured by thermomechanical analysis (TMA). ASTM D696 gives a method using a quartz dilatometer, and ASTM E831 describes the determination of the linear thermal expansion of solid materials. Volume contraction of a container from the molding operation temperature down to room temperature is called *shrinkage*, and its measurement is described in ASTM D955, D702, and D1299-55.

MECHANICAL PROPERTIES

The response of polymers subjected to mechanical forces is determined by the polymer's isoentropic elastic and viscoelastic behavior. Ideally, elastic behavior should be reversible for small deformations. Two types of small deformation are possible: tensile and shear. Hooke's law describes the response of plastics to tensile forces by relating tensile stress to elongation, while the law of shear deformation relates shear stress to both shear modulus and angle of shear. Viscoelastic behavior is observed in large deformations of solid polymers and polymer melts (9). In a creep experiment, the elongation of solid sample increases slowly as the weight hangs from the sample. When the force is released, the sample partially recovers its shape, decreasing the elongation. This behavior is due to the viscoelasticity behavior of the polymers: It partially recovers because it is elastic, and it creeps because it is viscous. This behavior is due to the continuous-chain molecular rearrangement that takes place at all temperatures. The time lapses associated with molecular rearrangement are much larger below than above the glass-transition temperature. The viscoelastic behavior affects almost all mechanical properties of a polymer and should be carefully considered in packaging design. Polymer strength increases with increasing molecular mass and with increasing intermolecular forces, but it decreases with the presence of plasticizers. For example, at the same molecular mass, polyamides, polyesters, or polyacrylonitriles are stronger than polyolefins, and plasticized PVC is weaker than rigid PVC.

Bursting Strength. This is the hydrostatic pressure, usually in pascal (or psi), required to produce rupture of the material when the pressure is applied at a controlled increased rate through a circular rubber diaphragm of 30.48 mm (1.2 in.) in diameter. "Points bursting strength" is the pressure expressed in psi. The measurement of the bursting strength of plastic films is described in ASTM method D774.

Dimensional Stability. *Dimensional stability* refers to the capability of a structure to maintain its dimensions under the changing conditions of temperature and humidity. Machine and transverse directions may produce different changes in dimensional stability, which is important in any flexible material converting process. During printing, for example, even small changes in dimensions may lead to serious problems in holding a print pattern. ASTM D1204 describes a standard method for linear dimensional changes of flexible thermoplastic films and sheets at elevated temperature.

Folding Endurance. This is a measure of the resistance of the material to flexure or creasing. Folding endurance is greatly influenced by the polymer's glass-transition temperature and the presence of plasticizers. ASTM D2176 describes the procedure to determine the number of folds necessary to break the sample film.

Impact Strength. Impact strength is the material's resistance to breakage under a high-velocity impact. Widely used impact tests are Izod (ASTM D256A) and Charpy (ASTM D256) for rigid materials, and for dart-drop impact (ASTM D4272) and pendulum-impact resistance (ASTM D3420) for flexible structures. A free-falling dart method for polyethylene films is described in ASTM D1709. Unlike low-speed uniaxial tensile tests, the pendulum-impact test measures the resistance of film to impact puncture simulating high-speed enduse applications. Dart drop measures the energy lost by a moderate-velocity blunt impact passing through the film. Both pendulum and impact tests measure the toughness of a flexible structure.

Melt-Flow Index. Most polymer melts follow a pseudoplastic behavior, which implies that the viscosity decreases with shear rate. In common extrusion processes, the shear-rate value varies from 100 to 100,000 s^{-1} (per second). It follows that a complete rheological description of an extrusion process should include a wide range of shear-rate values at suitable temperature range. The melt-flow index (MFI) is a widely used test to measure polymer flow properties, but it provides flow values at only one shear-rate value. MFI, also called *extrusion plastometer test*, is described in ASTM D1238. The melt-flow index measures the mass of polymer extruded during 10 min. Values of MFI vary between 0.3 and 20 g/10 min, corresponding to shear-rate values ranging from 1 to 50 s^{-1}. Variables that affect the MFI of a resin include average molecular mass, distribution of molecular mass, branching, and temperature (10).

Pinhole Flex Test. Pinhole flex resistance is the property of a film to resist the formation of pinholes during repeated folding. A related test is the folding endurance. Film having a low value of pinhole flex resistance will easily generate pinholes at the folding line, under repeated flexing. The test is described by the standard ASTM F456.

Poisson's Ratio. Poisson's ratio is the ratio of lateral strain to longitudinal strain measured simultaneously in a creep experiment. Its value varies from 0.5 (for totally deformed but nonelastic liquids), to 0 (for pure elastic incompressible solid materials). Typical values for rubber materials range from 0.49 to 0.499; and for plastic, from 0.20 to 0.40. This shows that when a polymer sample is elongated, its volume will increase. Because polymers are viscoelastic materials, the Poisson-ratio value is morphology- and time-dependent (1).

Tensile Properties. The mechanical behavior of a polymer can be evaluated by its stress–strain tensile characteristics. The stress is measured in force/area, which can be given in pascals or psi, and the strain is the dimensionless fractional length increase. *Modulus of elasticity, E,* is the elastic ratio between the stress applied and the strain produced, giving the material's resistance to elastic deformation. The tensile modulus also gives a measure of the material stiffness; the larger the modulus, the more *brittle* the material. For example, E of LDPE is 250 mPa, while for "crystal" PS it is 2500 mPa. Comparatively, values of tensile modulus in polymers (1.9×10^3 mPa for nylon) are much lower than for glass (60×10^3 mPa) or mild steel (220×10^3 mPa) (6). *Elastic elongation* is the maximum strain under elastic behavior. *Ultimate strength* or *tensile strength* is the maximum tensile stress the material can sustain. Ultimate elongation is the strain at which the sample ruptures. *Toughness* is how much energy a film can absorb before rupturing, and it is measured by the area under the stress–strain curve. *Brittleness* is the lack of toughness (11). Amorphous and semicrystalline polymers become brittle when cooled below their glass-transition temperature. Tests for tensile properties are described in ASTM D882, for flexural strength in ASTM D790, and for flexural modulus in ASTM D790 M.

Tear Strength. Tear-strength measurement considers the energy absorbed by the film sample in propagating a tear. Standard methods available are (a) ASTM standard D1004, which describes the measurement for initial tear resistance, and (b) ASTM D1922 and ASTM D1938, which refer to the energy absorbed by a test specimen in propagating the tear that has already been initiated. The value of tear strength in one film depends on the orientation stretching ratio, whether the measurement is performed along the crossdirection or along the machine direction (CD or MD).

Viscosity. Viscosity, a fundamental rheological property of fluids, is a measure of the molecular resistance to shear fluid deformation, generated by the action of external forces. When the external action is given by the shear stress and the shear flow deformation given by the rate of strain or shear rate, the *absolute viscosity* is equal to the ratio of shear stress/shear rate. The viscosity of a polymer will increase with the length of the polymer chain, with smaller dispersion index (narrow distribution), and with increasing intermolecular forces. An increase of temperature, however, will decrease the viscosity. The rheological behavior of thermoplastics is, in most cases, Newtonian or pseudoplastic (10). The viscosity of Newtonian fluids is constant at any shear rate value. This behavior is characteristic of fluids with low molecular mass. In pseudoplastic materials, the viscosity decreases with shear rate; that is, the viscosity depends on the value of shear rate. Pseudoplastic behavior is characteristic of polymer melts. The viscosity of polymer melts ranges between 100 and 10^7 N/(s $\cdot$ m^{-2}). Viscosity is also known as either kinematic viscosity or intrinsic viscosity. *Kinematic viscosity* is the absolute viscosity divided by the density. *Intrinsic viscosity* (IV) can be obtained as follows: (1) Solutions of different concentrations c of the polymer in a solvent (having viscosity η_0) are prepared; (2) the viscosity η of the solutions are measured; and (3) from the plot of viscosity number, $[(\eta - \eta_0)/\eta_0 c]$, versus concentration, the IV is obtained as the value of the viscosity at concentration zero (11). Therefore, intrinsic viscosity, is a measure of the polymer's capacity to enhance the viscosity of the solvent. The units of IV are mL/g. For PE, the relation between molecular weight (MW) and IV is accepted to be as follows: $\mathrm{MW} = 5.3 \times 10^4\ (\mathrm{IV})^{1.37}$ (8). An IV of 5, for example, corresponds to an MW of 500,000. Intrinsic viscosity values of polymers can be estimated by group contribution in terms of molar intrinsic viscosity (1). ASTM has published several methods for measuring viscosity.

SOLUBILITY AND CHEMICAL DEGRADATION

Plastics are chemically resistant to many gases, liquids, and solid products within a wide range of pH. Nevertheless, polymers are not inert materials. Given the right conditions (temperature, time, and concentration), polymers can be depolymerized, transformed by chemical reactions, and penetrated by solvents and vapors. They can be affected by environmental agents such as visible and UV radiation, oxygen, microbes, solvents, and organic compounds (12). The extent of the transformation depends on the thermodynamic and kinetics parameters, which, in turn, depend heavily on temperature. In hydrophilic polymers (e.g., nylons, EVOH, and PET) water acts as a plasticizer, consequently lowering the glass-transition temperature and changing oxygen permeability and other mechanical properties (13). Water can dissolve certain polymers such as PVOH. Hydrophobic polymers such as polyolefins, on the other hand, are not affected by water.

Chemical Degradation. Chemical degradation of polymers results in the fragmentation of large chains into smaller ones and, eventually, into atomic elements. One important type of polymer chemical degradation is oxidation (12). Often oxidation is promoted or induced by electromagnetic radiation (photodegradation) and by thermal energy at high temperature (thermal oxidation). Polymers such as PE, PP, and PVC are particularly prone to oxidation during melt processing. Tensile strength, elasticity, and impact strength are drastically affected by thermodegradation processes. Polymers may also be degraded by acids and alkalis. Test for resistance to acids, bases, and solvents is described in ASTM D543. Plastic resistance to grease and oil is covered in ASTM D722. The ASTM D756 test covers the effect of atmospheric humidity and temperature on plastics, and ASTM D570 covers the sorption of water of immersed plastics.

Environmental Stress Cracking. A plastic material may be resistant to a chemical compound in no-stress conditions. Nevertheless, the plastic may crack when subjected to a mechanical stress during exposure to that compound. Almost all plastics can show environmental stress cracking (ESC), when exposed to gases, liquids, or solids while under stress. The mechanism by which a plastic shows ESC is often complex. A practical evaluation of a plastic's resistance to liquids can be done by immersing a polymer sample in the liquid and then checking for the appearance of crazing, cracks, or even total failure of the sample. Also, a plastic container can be tested by filling it with the liquid, causing ESC. Stress conditions applied during testing may be of two types: constant stress or constant strain. The selection of the test method should correspond with the intended use of the container. Common ESC tests for PE bottles include bottle stress crack (ASTM D2561), top-load stress crack, and internal pressure (ASTM

D2561). For some applications, the temperatures recommended by ASTM for these tests may be too mild (14).

Flammability. The *flammability* behavior of a material is a broad term related to the easiness to ignite, burn, produce smoke, and endure burning. A flammable material ignites easily and has a rapid flaming combustion process. The initial step is decomposition (or pyrolysis), which is an endothermic process (the material absorbs heat). After ignition, products from pyrolysis are combusted and consequently, heat Q is generated. Some flame-retardant agents tend to minimize Q. The flammability characteristics of a polymer may be predicted from its chemical structure (1), and a method to measure flame resistance is the *oxygen index* (15). ASTM test D3713 describes the response of solid plastics to ignition by a small flame, and the ASTM D4100 method covers the gravimetric determination of smoke-particulate matter produced from combustion or pyrolysis of plastic materials. Testing plastics for practical fire situations is very complex and depends on many variables other than just chemical structure (16, 17).

Photodegradation. Sunlight is the source of energy for polymer photochemical degradation. Near-ultraviolet and visible radiation (290–710 nm) carry enough energy to break single covalent bonds such as C–C, C–O, or C–N. The absorption of these radiations is sometimes attributed to impurities in the polymer. Photodegradation processes generate chain ruptures and free-radical formation, resulting in color changes and increasing fragility (because of chain crosslinking and chain scissions). UV light stabilization of PP and other polyolefins can be achieved by the addition of hindered amine light stabilizers (HALSs) (18). These additives reduce the rate of photoinitiation and chain-reaction propagation by their ability to trap free radicals. ASTM D4674 describes the accelerated testing for color stability of plastics exposed to indoor fluorescent lighting and window-filtered daylight.

Solubility Parameter. Polymer solubility properties in organic liquids are controlled by the polymer's cohesive energy. The cohesive energy of a solid (or liquid) is the total energy necessary to remove one molecule from the bulk of the solid (or liquid). It is also an indication of the molecular internal pressure. The solubility of a polymer is given by its solubility parameter δ, which is the square root of the cohesive-energy density (CED), $\delta = (\mathrm{CED})^{1/2}$. In addition to cohesive energy density, polymer morphology and molecular mass also strongly affect the tendency of a polymer to dissolve. Crystalline structures, on the other hand, are insoluble below their melting temperature. Polymers have solubility parameter's ranging from 12 to 29 $(\mathrm{J/cm^3})^{1/2}$. Substances that have similar delta values [$<0.5\,(\mathrm{J/cm^3})^{1/2}$ apart] will tend to mutually dissolve. This substantiates the rule of thumb that "like dissolves like." Solubility parameters can be determined by solvent swelling (19) or intrinsic viscosity methods (20). Values of CED and solubility parameter of a polymer can be estimated by group contribution methods, based on the contribution of intermolecular forces: polar forces, dispersion forces, and hydrogen bonding (1). Extensive tables of δ are presented by Barton (21).

Solubility in Organic Solvents. Many organic compounds interact with polymers to produce slight swelling or staining, or total dissolution, depending on the polymer molecular mass, crystallinity, and solubility parameter. ASTM D2299 gives a method to assess the susceptibility of plastic staining by incidental contact with organic products. Common solvents for plastics are boiling xylene and trichlorobenzene; solvents for polyolefins, are styrene polymers, vinylchloride polymers, and polyacrylates; the solvent for polyamides and polyvinyl alcohol derivatives is formic acid; tetrahydrofuran is the solvent for all uncrosslinked polymers; nitrobenzene and *m*-cresol are the solvents for PET; water is the solvent for polyacrylamide and polyvinyl alcohol; and dimethylformamide is the solvent for polyacrylonitrile. In addition, polyvinyl acetate is dissolved by benzene, chloroform, methanol, acetone, and butyl acetate (22). ASTM D543 covers the testing of all plastic materials for resistance to chemical reagents.

Thermodegradation. Thermal degradation of polymers is the breaking of chain bonds by heat, in the absence of oxygen. Heat-stabilizing additives help prevent degradation, but impurities may have the contrary effect. Thermally stable polymers resist thermal degradation and will have high values of bond dissociation energy (1). As the temperature increases, chemical bonds with the lowest values of dissociation energy will be the first to break. Thermodegradation affects PE, PP, and PVC (18). The poor thermal stability of the PVC resin is caused mainly by dehydrochlorination. For each HCl eliminated from the polymer chain, a double bond is created, which, in turn, promotes oxygen chemical degradation. Heat stabilizers include inorganic and organic compounds. In the case of flexible PVC films, barium–zinc and calcium–zinc stabilizers are used, while organotin compounds are commonly used in PVC bottle containers.

BARRIER PROPERTIES

The *barrier property* of a material indicates its resistance to diffusion and sorption of foreign molecules. A high-barrier polymer has low values of both diffusion (D) and solubility (S) coefficients. Since the permeability coefficient P is a derived function of D and S, a high-barrier polymer has low permeability. The diffusion coefficient indicates how fast a penetrant will move within the polymer, while the solubility coefficient gives the amount of the penetrant taken (or sorbed) by the polymer from a contacting phase. Both diffusion and solubility can be applied to the reverse process of sorption—that is, the migration of compounds from the polymer to a surrounding medium. Several factors influence the effective value of the diffusion and solubility coefficients in polymers: (1) chemical compositions of the polymer and permeant, (2) polymer morphology (since diffusion and sorption occur mainly through the amorphous phase and not through crystals), (3) temperature (as temperature increases, diffusion increases while solubility decreases), (4) glass-transition temperature, and (5) the presence of plasticizers and fillers.

Diffusion Coefficient. In Fick's law, the diffusion coefficient D is a parameter that relates the flux of a penetrant in a medium to its concentration gradient. A diffusion-coefficient value is always given for a particular molecule–polymer pair. For solid polymers, the diffusion coefficient values may range from 1×10^{-8} to $1 \times 10^{-13}\,\text{cm}^2/\text{s}$. The diffusion theory shows that diffusion is an activated phenomenon that follows Arrhenius' law. In addition to temperature, penetrant concentration and plasticizers also affect the value of the diffusion coefficient. Excellent references covering the diffusion process are the books by Crank (23) and by Crank and Park (24).

Permeability Coefficient. The permeability coefficient (P) combines the effect of the diffusion and solubility coefficients. The barrier characteristic of a polymer is commonly associated with its permeability coefficient value. The well-known relationship $P = DS$ holds when D is concentration independent and S follows Henry's law. Methods for measuring the permeability to organic compounds are described by Hernandez et al. (25). ASTM E96 describes a method for measuring the water-vapor transmission rate (WVTR). ASTM D1434 covers a method for the determination of oxygen permeability.

Solubility Coefficient. The solubility coefficient indicates the sorption capacity of a polymer with respect to a particular sorbate. The simplest solubility coefficient is defined by Henry's law of solubility, which is valid at low concentration values. The solubility of CO_2 in PET at high pressure is described by combining Henry's and Langmuir's laws (26). In the case of organic compounds, the Flory–Huggins equation is applicable (24); and for sorption of water in nylons, a special model has been proposed (27).

SURFACE AND ADHESION

Adhesive Bond Strength. Adhesive bond strength between an adhesive and a solid substrate is a complex phenomenon and is controlled (at least in part) by the values of surface tension, solubility parameters, and adhesive viscosity. To obtain wettability and adhesion between a polymeric substrate and an adhesive, the surface tension of the adhesive must be lower than that of the substrate. Usually, the difference between the two values must be at least 10 dyn/cm. The similarity in solubility parameters between the two phases indicates the similarity of the intermolecular forces between the two phases. For good compatibility, the values of the solubility parameters must be very close. Low viscosity in the adhesive is necessary for good spreadability and wettability of the substrate (28).

Blocking. Blocking is the tendency of a polymer film to stick to itself simply by physical contact. This effect is controlled by the adhesion characteristic of the polymer. Blocking is enhanced by surface smoothness and by pressure on the films present in stacked sheets or compacted rolls. Blocking can be measured by the perpendicular force needed to separate two sheets, and it can be minimized by incorporating additives such as talc in the polymer film. ASTM D1893, ASTM D3354, and Packaging Institute procedure T3629 present methods to evaluate blocking.

Cohesive Bond Strength. Cohesive bond strength is the force within the adhesive itself when bonding two substrates. The cohesive bond strength depends mainly on the intermolecular forces of the adhesive, molecular mass, and temperature.

Friction. The coefficient of friction (COF) is a measure of the friction forces between two surfaces, and it characterizes a film's frictional behavior. The COF of a surface is determined by the surface adhesivity (surface tension and crystallinity), additives (slip, pigment, and antiblock agents), and surface finish. Cases in which the material's COF values require careful consideration include film passing over free-running rolls, bag forming, the wrapping of film around a product, and the stacking of bags and other containers. Besides the intrinsic variables affecting a material's COF, environmental factors such as machine speed, temperature, electrostatic buildup, and humidity also have considerable influence in its final value. The *static COF* is associated with the force needed to start moving an object. It is usually higher than the *kinetic coefficient*, which is the force needed to sustain movement. Determination of static COF is described in TAPPI standard T503 and ASTM D1894. Thompson (29) has also analyzed the action of additives on the value of COF of polypropylene.

Heat Sealing. An important property for wrapping, bagmaking, or sealing a flexible structure is the heat sealability of the material. At a given thickness, heat-sealing characteristics of flexible web material are determined by the material's composition (which controls strength), average molecular mass (controlling temperature and strength), molecular-mass distribution (setting temperature range and molecular entanglement), and the thermal conductivity (controlling dwell time (30). Tests normally conducted to evaluate the heat sealability of a polymeric material are the *cold-peel strength* (ASTM F88) and the *hot-tack strength* (31). Hot tack is the melt strength of a heat seal when the seal interface is still liquid and without mechanical support. The hot adhesivity is associated with the molecular entanglement of the polymer chains, viscosity, and intermolecular forces of the material.

Surface Tension. In solids and liquids, the forces associated with inside molecules are balanced because each molecule is surrounded by like molecules. On the other hand, molecules at the surface are not completely surrounded by the same type of molecules, thereby generating unbalanced forces. Therefore, at the surface, these molecules show additional free surface energy. The intensity of the free energy is proportional to the intermolecular forces of the material. The free surface energy of liquids and solids, called *surface tension*, can be expressed in mJ/m^2 (millijoules per square meter) or dyn/cm (dynes per centimeter). Values of surface tension in polymers range from 20 dyn/cm for Teflon to 46 dyn/cm for nylon 6,6. The measurement of surface tension by contact-angle measurement is covered by ASTM D2578. Several independent methods are used to estimate surface tension of liquids and solid polymers, including the molar parachor (1).

When two condensed phases are in close contact, the free energy at the interface is called *interfacial energy*. Interfacial energy and surface energy in polymeric materials control adhesion, wetting, printing, surface treatment, and fogging.

Wettability. Adhesion and printing operations on a plastic surface depend on the value of the substrate wettability or surface tension. A measure of the wettability of a surface is given by a material's surface tension as described in ASTM D2578.

ELECTRICAL PROPERTIES

Electrical conductivity, dielectric constants, dissipation factors, and triboelectric behavior are electrical properties of polymers subject to low electric-field strength. Materials can be classified as a function of their conductivity (κ) in $(\Omega/\text{cm})^{-1}$ (reciprocal ohms per centimeter) as follows: conductors, $0–10^{-5}$; dissipatives, $10^{-5}–10^{-12}$; and insulators, $\geqslant 10^{-12}$. Plastics are considered nonconductive materials (i.e., not counting the newly developed conducting materials).

Dielectric Constant. The relative dielectric constant of an insulating material (ε) is the ratio of the electric capacities of parallel-plate condenser with and without the material between the plates. A correlation between the dielectric constant and the solubility parameter (δ) is given by the relationship of $\delta \approx 7.0\varepsilon$ (1). There is also a relationship between *resistivity* R (inverse of conductivity) and the dielectric constant at 298 K: $\log R = 23 - 2\varepsilon$ (1). Values of ε for polymers are presented in Refs. (1) and (2).

Triboelectric Behavior. When two polymers are rubbed against each other, one becomes positively charged and the other becomes negatively charged, depending on the relative electron donor–acceptor characteristics of the polymers. A *triboelectric* series is the listing of polymers according to their charge intensity, which goes from the most negative charge (electron acceptor) to the most positive (electron donor). The charge of polymer films also takes place by friction during industrial operations such as form/fill/seal. The most negative polymers are (value in parentheses is the dielectric constant): PP ($\varepsilon = 2.2$), PE ($\varepsilon = 2.3$), and PS ($\varepsilon = 2.6$); neutral charged polymers include PVC ($\varepsilon = 2.8$), PVDC ($\varepsilon = 2.9$), and PAN ($\varepsilon = 3.1$); and positively charged polymers include cellulose ($\varepsilon = 3.7$) and nylon 6,6 ($\varepsilon = 4.0$). As these values suggest, the tribolectric series of dry polymers can be correlated with the polymer dielectric constant. Since hydrophilic polymers absorb water, they become more conductive, and their dielectric constants increase. Standard methods for measuring the triboelectric charge of films and foams are, at the time of this article, still under consideration by ASTM Committee D10.13 (32).

OPTICAL APPEARANCE

Among the most important optical properties of polymers are absorption, reflection, scattering, and refraction. Absorption of light takes place at the molecular level, when the electromagnetic energy is absorbed by atoms or group of atoms. If visible light is absorbed, a color will appear; however, most polymers show no specific absorption with visible light and, therefore, are colorless. Reflection is the light that is remitted on the surface and depends on the refractive indices of air and polymer. Scattering of light is caused by optical inhomogeneities reflecting the light in all directions. Refraction is the change in direction of light due to the difference between the polymer and air refraction indices. Transparency, opacity, and gloss of a polymer are not directly related to the chemical structure or molecular mass; they are determined mainly by the polymer morphology. Optical appearance properties are of two types: optical morphological properties, which correlate with transparency and opacity; and optical surface properties, which produce the specular reflectance and attenuated reflectance (1, 33).

Gloss. Gloss is the percentage of incident light that is reflected at an angle equal to the angle of the incident rays (normally 45°). It is a measure of the ability of a surface to reflect the incident light. If the specular reflectance is near zero, the surface is said to be "mat." A surface with high reflectance has a high gloss, which produces a sharp image of any light source and gives a pleasing sparkle. Surface roughness, irregularities, and scratches all decrease gloss. Test method is covered by ASTM 2457.

Haze. Haze is the percentage of transmitted light that, in passing through the sample, deviates by more than 2.5° from an incident parallel beam. The appearance of haze is caused by light being scattered by surface imperfections and nonhomogeneity. The measurement of haze is described in ASTM D1003.

Transparency and Opacity. Transmittance is the percent of incident light that passes through the sample and is determined by the intensity of the absorption and scattering effects. The absorption in polymers is insignificant; thus, if the scattering is zero, the sample will be transparent. An opaque material has low transmittance and, therefore, large scattering power. The scattering power of a polymer results from morphological inhomogeneities and/or the presence of crystals. Then, an amorphous homogeneous polymer such as "crystal" polystyrene will have little or no scattering power and therefore will be transparent, while a highly crystalline polymer such as

HDPE will be mostly opaque. Transmittance can be determined according to standard ASTM D1003. A transparent material has a transmittance value above 90%.

BIBLIOGRAPHY

1. D. W. Van Krevelen, *Properties of Polymers,* 3rd edition, Elsevier, New York, 1990.
2. J. Brandup, and E. Immergut, eds., *Polymer Handbook,* 3rd edition, Wiley-Interscience, New York, 1989.
3. D. Braun, *Identification of Plastics,* 2nd edition, Hanser Publishers, New York, 1986.
4. American Society for Testing and Materials, Vols. 08.01–08.03, 1988.
5. R. C. Progelhof and J. L. Thorne, *Polymer Engineering Principles,* Hanser Publishers, New York, 1993.
6. *Guide to Plastics Property and Specification Charts, Modern Plastics*, McGraw-Hill, New York, 1987, pp. 46–48.
7. B. Wunderlich, S. Cheng, and K. Loufakis, in J. I. Kroschwitz, ed., *Encyclopedia of Polymer Science and Engineering,* Vol. 16, Wiley, New York, 1989, pp. 767–807.
8. D. Rosato, *Rosato's Plastic Encyclopedia and Dictionary,* Hanser Publishers, New York, 1993.
9. G. Kampf, *Characterization of Plastic by Physical Methods*, Hansen Publishers, New York, 1986.
10. A. Birley, B. Harworth, and J. Batchelor, *Physics of Plastics,* Hansen Publishers, New York, 1992.
11. R. P. Brown, ed., *Handbook of Plastic Testing,* 2nd edition, Pitman Press, Bath, UK, 1981.
12. S. H. Hamid, M. B. Amin, and A. G. Maadhah, eds., *Handbook of Polymer Degradation,* Marcel Dekker, New York, 1992.
13. R. J. Hernandez, *J. Food Eng*. **22**, 495–505 (1991).
14. J. J. Strebel, *Polym. Test*. **14**, 189–202 (1995).
15. C. P. Fenimore and F. J. Martin, *Modern Plast*. **44**, 141 (1966).
16. F. L. Fire, *Combustion of Plastics,* Van Nostrand Reinhold, New York, 1991.
17. C. J. Hilado, *Flammability Handbook for Plastics,* 4th edition, Technomic, Lancaster, PA, 1990.
18. P. N. Son, "UV Stabilizers" in *Modern Plastics Encyclopedia Handbook,* McGraw-Hill, 1994, p. 119.
19. G. M. Bristow and W. F. Watson, *Trans. Faraday, Soc*. **54**, 1731,1742 (1958).
20. H. Mark and A. V. Tobolsky, *Physical Chemistry of High Polymers,* 2nd edition, Interscience, New York, 1950.
21. A. F. M. Barton, *Handbook of Polymer-Liquid Interaction Parameters and Solubility Parameters*, CRC Press, Boca Raton, FL, 1990.
22. D. Braun, *Simple Methods for Identification of Plastics,* 2nd edition, Hanser Publishers, New York, 1986.
23. J. Crank, *The Mathematics of Diffusion,* 2nd edition, Clarendon Press, London, 1975.
24. J. Crank and G. S. Park, *Diffusion in Polymers,* Academic Press, New York, 1968.
25. R. J. Hernandez, J. R. Giacin, and A. L. Baner, *J. Plast. Film Sheet*. **2**, 187–211 (1986).
26. W. R. Vieth, J. M. Howell, and J. Hsieh, *J. Membrane Sci*. **1**, 177 (1976).
27. R. J. Hernandez and R. Gavara, *J. Polym. Sci., Part B* **32**, 2367–2374 (1994).
28. D. E. Packham, *Handbook of Adhesives,* John Wiley & Sons, New York, 1993.
29. K. I. Thompson, *TAPPI J.,* 157 (September 1988).
30. J. W. Spink, R. J. Hernandez, and J. R. Giacin, *TAPPI Proceedings Polymer, Laminations and Coating Conference,* 1991, pp. 579–587.
31. H. Theller, *J. Plast. Film Sheet*. **5**(1), 66 (1989).
32. C. W. Hall, S. Singh, and G. Burgess, *J. Test. Evaluation,* **21**, 57–61 (1993).
33. M. Born and E. Wolf, *Principle of Optics,* 6th edition, Pergamon Press, Oxford, 1980.

Cited Publications

Ruben J. Hernandez, in A. L. Brody and K. S. Marsh, *The Wiley Encyclopedia of Packaging Technology,* 2nd ed., 1997, pp. 758–765.

POLYMERIC OXYGEN SCAVENGING SYSTEMS

Kay Cooksey
Michigan State University, East
Lansing, Michigan

Oxygen scavengers are mainly used for food and pharmaceutical applications but also can be used for any product that needs a low oxygen storage atmosphere. Essentially, oxygen scavengers are so named because they preferentially absorb oxygen within the environment, thus, preventing the oxygen from reacting with the product. Many other terms have been used to describe oxygen scavengers, which include the following: antioxidants, interceptors, controllers, and absorbers. According to Brody, the definition of an oxygen scavenger is a material in which a chemical (or combination of reactive compounds); incorporated into a package structure may combine with oxygen and effectively remove oxygen from the inner package environment. The purpose of an oxygen scavenger is to limit the amount of oxygen available for deteriorative reactions that can lead to reduced functionality of the product. For foods and pharmaceutical products, deteriorative reactions include lipid oxidation, nutritional loss, changes in flavor and aroma, alteration of texture, and microbial spoilage. Typically, oxygen scavengers are used in packages that have air tight seals and are used in conjunction with other means of preservation, such as chemical preservatives, reduced water activity, reduced pH, vacuum packaging, or modified atmosphere packaging.

BACKGROUND AND HISTORY

Research on oxygen scavengers began in the 1920s for enclosed packages using a ferrous sulfate and moisture absorbing mixture (1). Rooney (2) indicates that a British patent from 1938 used iron, zinc, or manganese to scavenge oxygen from canned foods. Research continued throughout the 1940s with the bulk of the work performed in the United Kingdom and by the U.S. Army for military rations. During the 1970s the first major commercial oxygen scavenger was introduced by Mitsubishi Gas and Chemical Company in Japan, which was available in the United States by the late 1970s. The product eventually became known under the tradename Ageless® and functions using permeable sachet that contains a reduced iron salt and moisture absorbent material. Another company from Japan, Toppan Printing Company, also produced a commercially available oxygen scavenging system, but it functioned using ascorbic acid-based reaction. During the 1970s and 1980s, more oxygen scavenging systems were introduced by Japanese and American companies using several scavenging methods (1–2). During the 1980s, work began on oxygen scavenger development using singlet oxygen reaction by the Commonwealth Scientific Industrial Research Organization (CSIRO) in Australia. See sachets shown in Figures 1 and 2.

According to de Kruijf (3), oxygen scavengers are the most patented of all active packaging technologies with at least 50 patents through 1989 and 20 issued from 1990 to 1994. In the 1990s work focused more heavily on technologies to incorporate oxygen scavengers directly into film and other package forms such as closure liners, thermoformed cups, tubs, and trays rather than sachets. Part of the reason for this change was related to concern over consumers accidentally using the sachets as “flavor packets” and incidents whereupon the contents of the sachet may seep out into the food. These problems can lead to loss of product quality and can also lead to serious consumer safety concerns. For example, iron in concentrated amounts, can be toxic to children or pets, because of their small body mass. For this reason, the FDA mandated that iron-based sachets must be labeled with “Do not eat” on the sachets sold in the United States to avoid accidental ingestion of the contents. (4).

Based on information made available in 2002, oxygen scavengers in bottles made up the largest portion of the market with 43.8% of the market, followed by cap/liner/lidding representing 31.5%, sachets with 22.6%, and oxygen absorbing film with 2%.

Figure 1. Mitsubishi Ageless Sachets.

Figure 2. Multisorb Freshpax.

TYPES AND MECHANISMS OF ACTION

Iron-Based Systems. Iron-based sachets are the type of oxygen scavenging system that has been used commercially for many years. It generally involves a reaction between iron powder contained in a permeable sachet that also may contain a dessicant. Iron powder reacts with oxygen using the following reaction (6, 7):

$$\mathrm{Fe} \rightarrow \mathrm{Fe}^{2+} + 2\mathrm{e}^-$$

$$\tfrac{1}{2}\mathrm{O}_2 + \mathrm{H}_2\mathrm{O} + 2\mathrm{e}^- \rightarrow 2\mathrm{OH}^-$$

$$\mathrm{Fe}^{2+} + 2\mathrm{OH}^- \rightarrow \mathrm{Fe(OH)}_2$$

$$\mathrm{Fe(OH)}_2 + \tfrac{1}{4}\mathrm{O}_2 + \tfrac{1}{2}\mathrm{H}_2\mathrm{O} \rightarrow \mathrm{Fe(OH)}_3$$

Oxygen Scavenging Polymer Materials. Many polymers have been developed using a wide variety of chemistries (2), however, the most commercially successful materials have been homogenous blends of reactive substances with polymers. An effective oxygen scavenging polymer was developed in which dissolved reagents of known chemistry were incorporated into a polymer, and the trigger mechanism was light, which excited the reactive components in the film, thus, influencing oxygen diffusion into the polymer. The oxygen has to be in an excited singlet state, which required the use of a photsensitizing dye and exposure to visible light. Another approach was based on transition-metal-catalyzed oxidation of an aromatic nylon. The transition metal in this case was cobalt or cobalt salt. This material eventually became known under the tradename Oxbar™ The material easily could be blended with polyester eventually to become important for packaging wine and beer in plastic bottles, because it effectively could prevent oxidation in both products. Amoco Chemcials introduced a material called Amosorb™, which blended polyester and polybutadiene and was catalyzed by a transition metal salt. When the catalyst was added late in the injection molding process, the resulting material became an oxidizable polymer. Another material using light as a triggering mechanism was developed by Speer and coworkers (8). This patent process used a transition metal catalyst and a photosensitizer. The reaction was designed in such a way as to prevent the rupture of the polymer backbone as might normally occur through oxidation. The material was composed of unsaturated polymers such as poly(1,2 butdiene), which could scavenge ground state oxygen as opposed to singlet oxygen. This product is marketed under the trade name OS 1000™ or 2000™ by Cryovac Division of Sealed Air (Figure 3).

Other materials that incorporate active components into the polymer include material marketed by Chevron Chemical Company, which works by auto-oxidation of unsaturated groups on the polymer backbone. Oxidation of aromatic nylons and hydrocarbon polymers with active side groups use light to trigger the oxygen scavenging process. One method that differs from the light triggering systems involves the light excitation of a photoreducible component such as phenolic compound, which is reduced by oxygen, thereby scavenging oxygen.

Figure 3. Cryovac OS1000 oxygen scavenging film.

Designing an oxygen scavenging system for specific types of packaging is quite complex and still not well understood except by the vendors who specialize in such systems. Most oxygen scavengers are designed for packaging based on the removal of a specified amount of oxygen from the interior of the package over a period of a few days. Tewari and coworker (9) studied the oxygen absorption kinetics of six commercial oxygen scavengers that differed in oxygen scavenging capacity as well as oxygen scavenging methods (i.e., iron-based and enzyme based). It was determined that oxygen concentration was the primary limiting factor in the kinetics of oxygen scavengers in atmosphere of less than 500 ppm but other factors such as temperature, capacity, and variation between types of scavengers also occurred. Miltz and Perry (10) studied the performance of iron-based oxygen sachets to improve methods to apply them more effectively because their cost and lack of technical understanding has limited their use. Based on their study, the actual scavenging capacity was higher than the manufacturers specifications. They also found that, in modified atmosphere packages containing carbon dioxide, the sachets also absorbed the carbon dioxide as well as oxygen. Oxygen sachets were found to reduce the transient period time (time to reach equilibrium) for active modified atmosphere packaging by nearly half compared to passive modified atmosphere packaging without a sachet. This effect allowed the shelf life to be extended because of optimal atmosphere as soon as quickly as possible (11).

APPLICATIONS

Oxygen scavengers were initially used by the U.S. military for the meals ready to eat (MRE) rations. Foods with oxygen scavengers for MREs include the following: white and whole wheat bread, pound cake, fudge brownies, wheat snack bread, potato sticks, chow mein noodles, nut raisin mix, pretzels, waffles, and hamburger buns (1). In the retail market, typical uses in the United States include fresh pasta, beef jerky, pepperoni, beer (cap liner and some bottles), ketchup, juice, case-ready meats, prepared foods, and shredded cheese. Use of oxygen sachets is more prevalent and diverse in Japan for products such as seasonings, cheese, aseptically packaged cooked rice, dry pet foods, cough capsules, plant growth hormone, antibiotics, vitamins pills and tablets, medical kits to preserve reagents, kidney dialysis kits, and other products.

CURRENT RESEARCH ON SPECIFIC APPLICATIONS

Meat Packaging. Oxygen scavengers are used in meat packaging to control color in red meat packages. When the pigment for red meat (myglobin) is exposed to oxygen, the meat appears as a bright red color, which is associated with freshness and overall acceptability. However, when meat is exposed to too much oxygen over time, the pigment converts to metmyoglobin, which appears as a brown color and is not visually acceptable to consumers. Many studies have used oxygen scavengers in modified atmosphere packages to extend the display life of red meat packages. Gill and McGinnis (12) studied the conditions under which commercially available scavengers with an oxygen absorbing capacity of 200 ml/sachet could prevent transient discoloration of nitrogen flushed ground beef. The rate of oxygen absorption decreased with decreasing oxygen concentration when the oxygen concentration was between 10 and 20%, but the rate of oxygen absorption became exponentially proportional with time when the oxygen concentration was less than 1%. Oxygen concentration in packages needed to be reduced below 10 ppm in 30 minutes at 2 °C or 2 hours at 1.5 °C to prevent transient discoloration. It was determined that to achieve this, more sachets than were economically feasible would have been required at that time. Continued work on prevention of transient discoloration of beef was done by Tewari and others (13), who determined that steaks removed from a controlled atmosphere masterpack had less discoloration when packaged with an oxygen scavenger and that the number of sachets had more impact on discoloration prevention than the type of scavenger used. The same research group also studied the effect of oxygen scavengers inside retail trays, lidding and over-wrapped trays, which were all equally effective for extending the acceptable shelf life of modified atmosphere, display ready beef and pork cuts (14). They also found that eight oxygen scavengers with a capacity sufficient to achieve an oxygen half life of 0.6–0.7 were needed when oxygen concentration could otherwise remain at less than 500ppm during storage. Isdell (15) measured the redness of meat 96 hours after removal from a gas flushed mother pack. They found that redness of meat packaged in a retail tray containing oxygen scavengers was better than retail trays that did not contain an oxygen scavenger. In another study, researchers (16) found that, combined with a controlled atmosphere mother pack (outer bag), double flushed with 50% carbon dioxide and 50% nitrogen was effective for maintaining the display shelf life of variety of red meat cuts. The oxygen scavenger helped maintain a low level of oxygen (0.1%) to prevent formation of metmyoglobin.

Payne and others, (17) studied vacuum controlled atmosphere packaging with carbon dioxide, carbon dioxide flushed packages containing iron-based oxygen scavenging sachets, and packages that contain oxygen scavengers alone for beef stored for up to 20 weeks at −1.5 °C. Beef packaged with oxygen scavenger alone provided the best results with regard to drip loss, microbial and sensory properties. Martinez and coworkers (18) found that fresh pork sausages packaged in a 20% carbon dioxide, 80% nitrogen atmosphere with an iron-based oxygen scavenging sachet, had reduced psychrotropic aerobic counts and extended shelf life with regard to color and lipid stability for 20 days at 2 °C. Catfish steaks were packaged in barrier film and vacuum packaged with and without an iron-based sachet. Shelf life was extended 10 days (20 days with sachet v. 10 days without sachet) with the aid of the sachet based on sensory, microbiological, and volatile base nitrogen analysis. The oxygen in the packages containing the sachets reached 0.42% within 24 hours of packaging (19). Labels are manufactured that absorb 10–20 mL of oxygen, and larger labels are starting to become available that scavenge 100–200 mL O_2 (7). Besides labels, oxygen scavengers also can be incorporated into the polymer film. The film is capable of reducing oxygen in the headspace to less than 1 ppm in 4–10 days for products such as dried, smoked meat as well as processed meat products (20).

Bakery Products. Baked goods such as bread, pastries, cakes, and cookies can have an extended shelf life with use of oxygen scavengers combined with modified atmosphere packaging. The low-oxygen condition retard molds and other spoilage bacteria and also reduces lipid oxidation, which can produce off flavors. According to Kotsianis and coworkers (21), an advantage over using an oxygen scavenger system compared to modified atmosphere packaging alone was because of the fact that lower oxygen levels could be achieved, and oxygen can be reduced in case of leakage through defective seals. The disadvantages could be cost and possible consumer objection to a packet inserted inside the package that could become loose and cause accidental ingestion by a child or pet. A few studies have reported on the effectiveness of oxygen scavengers for bakery products. Sponge cakes (0.8–0.9 a_w) were packed in a modified atmosphere package (MAP) with oxygen absorber sachets of two different absorption capacities (100 and 210 mL). The cakes were analyzed for mold growth over a period of 28 days at 25 °C storage. MAP alone provided some benefits regarding mold prevention; however, combining oxygen scavengers (using either 100 or 210 mL) with modified atmosphere (30% CO_2) prevented mold growth entirely during the 28 days of storage. The results also indicated that a greater benefit existed for cakes with a higher a_w (0.9) compared to lower a_w (0.8) (22).

In another study (23), oxygen absorbers were added to wheat crackers formulated with high levels of oil for storage in hermetically sealed cans used as military rations. The study included storage at 15, 25, and 35 °C. Shelf life was assessed using sensory panels as well as hexane concentration and headspace oxygen measurements. As storage temperature increased, headspace oxygen decreased within the can. Overall, cans of crackers without oxygen sachets reached unacceptable levels of rancidity within 24 weeks at 25 and 35°C. Cans of crackers with oxygen sachets did not have rancid odors after 44 weeks of storage, regardless of storage temperature. Thus, shelf life of canned crackers was extended for 20 weeks with oxygen absorbers added to the can.

Other Products. In a study by Zerdin and coworkers (24), orange juice contained in aseptic packages with an oxygen scavenging barrier layer had better retention of ascorbic acid than packages with plain oxygen barrier film. Packages that contained oxygen scavengers had less mold growth on cheddar cheese compared to packages without the oxygen scavengers over a 16 week refrigerated storage period (25).

Milk processed using ultra-high temperature processing, (UHT) was packaged and stored in aseptic pouches that contain an oxygen scavenging film or a pouch without the scavenging film. The milk in the oxygen scavenging pouch had significantly lower levels of dissolved oxygen and levels of volatiles associated with staleness (26). Hazelnuts were packaged under controlled atmosphere conditions with and without iron-based oxygen sachets. The nuts packaged using the sachets were significantly less oxidized compared to the nuts without the sachets. However, when the sachets were analyzed for volatile compounds, other flavor compounds were also scavenged by the sachets (27)

REGULATORY STATUS

A program was developed by the EU Fair R&D program to establish and implement active and intelligent packaging technologies within existing EU regulations, which would enable technologies to be used and allow for products to be globally competitive with other technologies. The program included, inventory, classification, evaluation, and recommendations for regulation of active and intelligent packaging systems. Oxygen scavenging systems were examined as part of the evaluation step and was tested for migration into a variety of food simulants. It was determined (3) that migration from oxygen scavengers varied significantly depending upon type of system (sachet, cap, crown, or film) and food stimulant. For example, migration of oxygen scavenger in water (mg/sample) was 620, 74, 1.0, and 0.2 for sachet, cap, crown, and film, respectively. Based on a study by Lopez-Cervantes and coworkers (23), migration into liquid, solid, and gelled food stimulants using two different types of oxygen sachets were tested. Migration from oxygen scavengers did not exceed European Union migration limits as long as the sachet was properly located in the package, and the packaging process did not favor the content becoming wet from water released from the food.

FUTURE OF OXYGEN SCAVENGERS

New methods of producing oxygen scavengers will continue to be developed. For example, Alteiri and coworkers (29), suggested the use of aerobic microorganisms as the mechanism for oxygen scavenging. The microorganisms can be trapped in poly-vinyl alcohol and used as a coating for high humidity foods. Another use that may see increased application is addition of an oxygen sachet with biopolymer film. Polylactic acid film did not have oxygen barrier properties equal to the polyester film typically used for packaging semi-hard cheese (30). However, when an oxygen scavenger was added to the package, lipid oxidation of the cheese was significantly reduced and continued to improve with dark storage (Tables 1, 2).

Table 1. Oxygen Scavenging Components

Sulfites
Boron
Glycols and sugar alcohols
Unsaturated fatty acids and hydrocarbons
Palladium catalysts
Enzymes
Yeast
Ferrous-iron
Organometallic ligands
Photosensitive Dyes
Polydiene block copolymers
Polymer-bound olefins
Aromatic nylon

Another new method may involve radiation treatment of ethyl vinyl alcohol copolymers. Researchers (30), irradiated EVOH (29% ethylene) with 30 and 90 kGy dosages and found that as the dosage increased, the longer the polymer was able to react with oxygen.

Oxygen scavengers that function better under a variety of temperatures will also be used. A patent was issued for an oxygen scavenging film that acts under ambient and refrigerated conditions and can be incorporated uniformly into a multilayer film (32). Another development involves a patent that indicates that the activation of the oxygen scavenging component of a film can be triggered upon packaging with the product to prevent loss of scavenging capacity in films that may be active while film is in storage (prior to product packaging). The film would receive an initial trigger using actinic radiation, which would not be sufficient to activate the film fully and would receive the total dose necessary to trigger the oxygen scavenging component when desired (33).

An oxygen scavenger that also indicates the level of oxygen present has been developed, which makes it both an active, and intelligent package component. The scavenger is in a pouch form with a layer in the pouch that has a color changing substance that can be viewed through a clear window (34).

Table 2. Commercially Available Oxygen Scavenging Systems

Ageless®	Mitsubisihi Gas and Chemical Co., Japan
ATCO®	Emco Packaging Systems, UK; Standa Industries, France
Freshilizers series	Toppan Printing, Japan
Freshpax® Freshmax®	Multisorb Technologies, Inc. USA
Bioka®	Bioka, Finland
Smartcap	ZapatA Industries, USA
Daraform, Cryovac® OS 1000	Cryovac, Division of Sealed Air, USA
Oxyguard	Toyo Seikan Kaisha, Japan
Oxbar™	Carnaud Metal Box, UK
Zero$_2$™	CSIRO, Southcorp Packaging, Australia
Amsorb®	Amoco Chemicals, USA

REFERENCES

1. A. L. Brody, E. R. Strupinsky, and L. R. Kline. *Active Packaging for Food Applications*, CRC Press, Boca Raton, FL, 2001.
2. M. L. Rooney, in J. H. Han, ed. *Innovations in Food Packaging*. Elsevier Academic Press, San Diego, CA., 2005, pp. 123–137.
3. N. de Kruijf, M. van Beest, R. Rijk, T. Spilainen-Malm, P. Paserio Losada, and B. De Meulenaer, Food Add. and Contam, 19 Supplement, 144–162 (2002).
4. M. Ozdemir and J. D. Floros, *Crit. Rev. Fd. Sci. and Nutri*. **44**, 185–193 (2004).
5. A. Brody, Active Packaging: Beyond Barriers. Packaging Strategies, West Chester, PA and BRG Townsend, Mt. Olive, NJ (2002).
6. F. Charles, J. Sanchez, N. Gontard, J. Fd. Eng, **72**, 1–7 (2006).
7. J. P. Kerry, M. N. O'Grady,S. A. Hogan. *Meat Sci*, **74**, 113–130 (2006).
8. U. S. Patent 5,211,875, D. V. Speer, W. P. Roberts, and C. R. Morgan, 1993.
9. G. Twari, L. E. Jeremiah, D. S. Jayas, R. A. Holley, Internat. J. Fd. Sci. & Tech. **37**, 199–207 (2002).
10. J. Miltz, M. Perry, *Packag. Technol. Sci*. **18**, 21–27 (2005).
11. F. Charles, J. Sanchez, N. Gontard, *J. Fd. Sci*. **70**, E443–E449 (2005).
12. C. O. Gill and J. C. McGinnis, Meat Sci. **41**, 19–27 (1995).
13. G. Twari, D. S. Jayas, E. Jeremiah, and R. A. Holley, *J. Fd. Sci*. **66**, 506–510 (2001).
14. G. Twari, Jayas, D. S., Jeremiah, L. E., and Holley, R. A. Internatl. *J. Fd. Sci. and Tech*., **37**, 209–217 (2002).
15. E. Isdell, P. Allen, A. Doherty, and F. Butler, Internat. *J. Fd. Sci. & Tech*., **34**, 71–80 (1999).
16. E. Isdell, P. Allen, A. Doherty, and F. Butler, Internat. *J. Fd. Sci. & Tech*., **38**, 623–632 (2003).
17. S. R. Payne, C. J. Durham, S. M. Scott, and C. E. Devine, *Meat Sci*., **49**, 277–287 (1998).
18. L. Martinez, D. Djenane , I. Cilla, J. A. Beltran, and P. Roncales, *Fd. Chem*., **94**,219–225 (2006).
19. C. O. Mohan, C. N. Ravishankar, T. K. Srinivasagopal, *J. Sci Fd. Agric*., **88**, 442–448 (2008).
20. B. Butler, Proceedings of Worldpak 2002 East Lansing, MI, USA., (2002).
21. I. S. Kotsianis, V. Giannou, C. Tzia, *Trends in Food Sci. and Tech*., **13**, 319–324 (2002).
22. M. E. Guynot,V. Sanchis ,A. J. Ramos, and S. Marín, *J. Fd Sci*. **68**, 2547–2552 (2003).
23. S. Berenzon and I. S. Saguy, Lebens.-Wisse *und Tech*., **31**, 1–5 (1998).
24. K. Zerdin, M. Rooney, and J. Vermue, *Fd. Chem*., **82**, 387–395 (2003).
25. E. Oyugi and E. Mbuy., Internat. *J. Dairy Tech*. **60**, 89–95 (2007).
26. M. Perkins, K. Zerdin, M. L. Rooney, B. R. D'Arcy, and H. C. Deeth, Packg. *Technol. Sci*. **20**, 137–146 (2007).
27. S. Pastorelli, S. Valzacchi, A. Rodriguez, and C. Simoneau, *Fd. Contam*., **23**, 1236–1241 (2006).
28. J. Lopez-Cervantes, D. I. Sanchez-Machado, S. Pastorelli, R. Rijk, and P. Paserio-Losada, *Fd. Add. Contam*., **20**, 291–299 (2003).
29. C. Altieri, M. Sinigaglia, M. R. Corbo, G. G. Buonocore, P. Falcone, and M. A. Del Nobile, Lebensm.-Wiss. *u.-Technol*., **37**, 9–15 (2004).
30. V. K. Holm, G. Mortensen, M. Vishart, M. A. Petersen, Internat. Dairy j., **16**, 931–939 (2006).
31. A. Lopez-Rubio, J. M. Lagaron, T. Yamamoto, and R. Gavara. *J. Appl. Poly. Sci*., **105**, 2676–2682 (2007).
32. U. S. Patent 7,078,100 B2, C. L. Ebner, A. E. Matthews, and T. O Millwood, for Cryovac Division of Sealed Air, (2006).
33. U. S. Patent 7,238,300, J. A. Solis, R. Dayrit, S. W. Beckwith, B. L. Butler, R. L. Cotterman, D. V. Speer and T. D. Kennedy, (2007).
34. European Patent Application EP 1 676 790 A1, W. Yang, Y. Yang, and L. Xiuzhi, (2006).

General References

M. L. Rooney, in M. L. Rooney (ed.) *Active Food Packaging*. Blackie Academic Professional, London, UK, pp. 145–165 (1995).

F. N. Teumac, in M. L. Rooney (ed.) *Active Food Packaging*. pp. 193–202 (1995).

G. Robertson, in G. Robertson (ed.) *Food Packaging, Principles and Practices* 2nd ed. CRC Press, Boca Raton, FL pp. 292–293 (2006).

V. Daniel, and F. L. Lambert. Available at http://palimpsest.stanford.edu/waac/wn/wn15/wn15-2/wn15-206.html. Accessed November 7, 2008.

POLYPROPYLENE

R.C. Miller
Montell USA, Inc., Wilmington, Delaware
Updated by Staff

INTRODUCTION

Polypropylene is an extremely versatile material in the packaging industry. The reason for its adaptability is the ease with which its polymer structure and additive packages can be tailored to meet diverse requirements. Many useful properties are inherent in polypropylene. It has low density (high yield), excellent chemical resistance, a relatively high melting point, and good strength, at modest cost.

GENERAL CATEGORIES AND DEFINITIONS

Polypropylene is the result of linking a large number (typically 1000 to over 30,000) of propylene molecules to build long polymer chains (see Figure 1). Polymers made up only of propylene are called homopolymers. If another monomer is added (typically ethylene), the polymer is

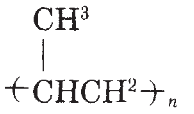

$$\left(\overset{\overset{\mathrm{CH^3}}{|}}{\mathrm{C}}\mathrm{HCH^2}\right)_n$$

Figure 1. Polypropylene.

called a copolymer. The order and regularity of the monomer units in the polymer control the properties of the product.

One end of a propylene molecule is different from the other. The end with three hydrogens is called the head; a head-to-tail linkage is called stereoregular. If the process links the monomers head-to-head about as often as they are linked head-to-tail, the resulting polymer has little order and does not crystallize (1). At room temperature, this material has a density of about 0.850 g/cm^3. It is called atactic or amorphous polypropylene and is soft, tacky, and soluble in many solvents. Such polymers are useful in hot-melt adhesives (see Adhesives) and several other applications.

If monomers are connected head-to-tail almost every time, the polymer is said to be isotactic and crystallizes (see Figure 2). Crystallinity is the reason for the solvent resistance, stiffness, and heat resistance of the commercial plastic material. At normal conditions, isotactic polypropylene is usually about half crystalline and has a density of 0.902 ± 0.005 g/cm^3. Normal polypropylene melts at about 329°F (165°C) when heated slowly and contains roughly 5% of atactic material as well as intermediate structures. In this article, the term *polypropylene* (PP) implies the plastic of commerce.

When discussing copolymers and alloys, an additional level of complexity is added. Alloys, also called blends, are mixtures of polymers. Copolymers are the result of polymerizing two or more monomers together. There are many possible types (structures) of copolymer (2), not all of which are useful.

Random copolymers result when a small amount of comonomer, usually ethylene, is polymerized at random intervals along the PP chain. Typical ethylene levels are from 1 to 5 wt%, and the product has only one phase. These copolymers are relatively clear and have lower and broader melting points than PP homopolymers. The lowering of the melting point is proportional to the randomness of incorporation and the amount of comonomer incorporated. At ethylene levels well above 10%, the product becomes less crystalline and is called EPR, or ethylene–propylene rubber. One cannot make an alloy (polymer blend) that resembles a random copolymer.

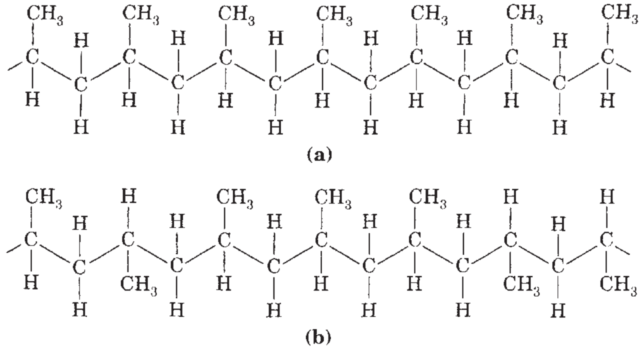

Figure 2. Comparison of the structures of isotactic and atactic polypropylenes: (**a**) isotactic PP–methyl groups in orderly alignment; (**b**) atactic PP–methyl groups in random alignment.

Impact copolymers generally contain larger amounts of ethylene monomer, typically 4 to >25%, and are heterophasic. The ethylene may be polymerized in the form of polyethylene and/or EPR. Usually, such products are made by polymerizing a homopolymer and changing the conditions to add ethylene to the polymer chain. Reasonably comparable materials can be made by mechanically blending polypropylene with EPR and/or polyethylene. If crystalline EPR or polyethylene is present, it can be detected by a second melting point at 224–271°F (118–133°C). These products are characterized by lower stiffness, much enhanced toughness at low temperatures, and a relatively opaque appearance (see Table 1).

The molecular weight (related to the average number of monomer units in a chain) and the molecular-weight distribution (MWD) are significant polymer characteristics. High-molecular-weight (HMW) polymers are highly viscous when melted and are difficult to injection-mold or push through restrictive dies, but they have high toughness and good "melt strength" (melt elasticity). Melts of low-molecular-weight (LMW) polymers are more fluid. They have less toughness and lower melt strength. In a narrow-MWD polymer, there is less variation in the length of the chains than in a broad-MWD polymer. Narrow MWD allows retention of the toughness of HMW grades (3) in a more easily processed material. Narrow MWD materials do not generally have high melt strength. They offer advantages in fiber spinning and injection molding.

Substantial modification in properties can be achieved by the use of additives (see Additives, plastics) and fillers. Virtually all commercial grades are stabilized to increase resistance to oxidation on aging or at elevated temperatures. Additives can confer resistance to sunlight, reduce the tendency to retain static electric charges, modify the coefficient of friction, and prevent surface tackiness.

The additives should be selected for the application. In food packaging, the stabilization should be chosen to avoid transfer of taste and odor to the package contents. Antistats reduce static electricity, which attracts dust and makes packages appear dirty. In sunlight, the damaging wavelengths are in the UV range. UV resistance is important for items that may be stored outdoors. Coefficient of friction and antiblocking properties are important in the winding and handling of film (see Slitting/rewinding). Frictional characteristics are also important in threaded closures (see Closures).

Fillers can greatly increase stiffness, improve processing behavior, confer conductivity, and change the

Table 1. Typical Polypropylene Properties

Property	Values			
	Homopolymer	Clarified Random Copolymer	Impact Copolymer	High-Impact Copolymer
Melt flow condition L, g/10 min	4	10	4	4
Tensile strength (yield), psi (MPa)	4900 (33.8)	4300 (29.6)	3900 (26.9)	3000 (20.7)
Yield elongation (%)	11	9	9	8
Flexural modulus, (1% secant), psi (MPa)	200,000 (1,380)	150,000 (1,030)	175,000 (1210)	130,000 (900)
Hardness Rockwell R (HRC)	86	77	73	70
Heat-deflection temperature (66 psi or 455 kPa), °F (°C)	199 (93)	189 (87)	189 (87)	176 (80)
Notched Izod, 23°C, ft · lbf/in. (J/m)	0.7 (37)	1.4 (75)	1.8 (96)	>10 >500
Application	Injection molding	Injection molding	Injection molding	Injection molding

appearance of PP. Commonly used fillers are talc, calcium carbonate (usually powdered marble), glass fiber, mica, carbon black, clays, cellulose fibers, lubricants, and pigments. Many exotic fillers have been used for special purposes. The use of fillers in PP usually reduces toughness and raises density and cost per volume.

PROCESSING

Melt-flow rate (MFR) is one of the key variables in the processing of PP. ASTM International (formerly The American Society for Testing and Materials) (4) specifies that PP is to be tested at 446°F (230°C) under a pressure exerted by a nominal 4.4-1b (2-kg) mass in the apparatus specified under ASTM Standard D-238. The result is the weight of material extruded through the standard orifice in 10 min.This test is a crude measure of the melt viscosity of the plastic under low shear rate. Melt viscosity correlates to the weight-average molecular weight of the polymer. Commercial PP grades of interest in packaging span a MFR range of 0.3–40 g/10 min. The low flow grades (up to about 2.5 g/10 min) are used in sheet extrusion (see Extrusion) and blow molding (see Blow molding). Film is manufactured from intermediate-flow grades (MFR 2–15 g/10 min). Injection-molding processes (see Injection molding) ordinarily use PP with MFR of 3–40 g/10 min (see Table 2).

Thermoforming

Sheet extrusion for thermoforming (see Thermoforming) is a small, rapidly growing segment of the PP market. Until the late 1970s, few converters were willing to attempt thermoforming of PP. Since that time, thermoforming techniques and grades have been improved. Random copolymers and impact copolymers have a broader temperature "window" and are more easily formed than homopolymers. Several grades are available that promise excellent forming characteristics, even in homopolymers. The several available high-melt strength PP grades ease manufacture via improved material distribution and higher forming rates. The factors that promote the use of PP in thermoforming are low odor and taste transfer, good moisture barrier, chemical resistance, and adequate clarity in thin sections.

Blow Molding

In blow molding, most of the resin consumed is for consumer products. High melt strength is required for extrusion blow molding, which is used to produce relatively large containers up to 5.3 gal (20 L) in size. Injection blow molding usually requires MFR of 1–2.5 g/10 min. This process is particularly useful for relatively small containers. The ability to withstand temperatures or aggressive chemicals that would stress-crack or attack other materials is usually

Table 2. Effect of Molecular Weight (Melt Flow) on Homopolymer Properties

Property	Values			
Melt-flow condition L, g/10 min	0.4	2	12	35
Tensile strength (yield), psi (MPa)	4800 (33.1)	5000 (34.5)	5100 (35.2)	4600 (31.7)
Yield elongation, %	13	11	10	12
Flexural modulus (1% secant), psi (MPa)	190,000 (1310)	220,000 (1520)	220,000 (1520)	170,000 (1170)
Hardness Rockwell R (HRR)	92	91	90	88
Heat-deflection temperature (66 psi or 455 kPa), °F (°C)	207 (97)	203 (95)	207 (97)	201 (94)
Notched Izod, 23°C, ft · lbf/in. (J/m)	1 (53)	0.8 (43)	0.7 (37)	0.6 (32)
Application	Sheet extrusion, thermoforming, blow molding	Sheet extrusion, thermoforming, blow molding	Injection molding, film	Injection molding

the reason to blow-mold PP today. In detergent exposure tests that crack HDPE in a day or two, PP does not fail even after many weeks. Random and impact copolymers are most often used. The development of high-melt-strength resins will assist the growth of PP blow molding. Today, injection stretch blow-molded PP bottles are biaxially oriented and rival the clarity of PET. If the chains of PP are stretched, they line up to give remarkable strength, clarity, and toughness (even at low temperature). This process uses a preform that is stretched and blown while warm. Random copolymers are used since low temperature toughness is provided by biaxial orientation. Typical resin MFR is 1–3 g/10 min for these applications.

Polypropylene ususally has a milky appearance (paticularly when empty). However, the contact clarity is really quite remarakalbe, making a filled bottle look attractive. Full-shrink-sleeve decoaration changes the whole visual impact if total clarity is an issue.

Film

The use of PP in film is very large. Oriented films typically have high toughness and excellent clarity (see Film, oriented polypropylene). They can be produced by a high-expansion bubble process or a tenter process. Product variations are possible based on the amount of transverse- and machine-direction orientation. Nonoriented cast films are usually made by a chill-roll process, but there are also water-quench and water-quenched bubble processes in use (see Extrusion; Film, nonoriented polypropylene). Oriented films can have a stiff feel or “hand.” They sparkle and tend to “crinkle” audibly. These films are employed as cigarette wrap, candy wrap, and snack-food pouches, often in replacement of cellophane (see Cellophane). Oriented films have been tailored for superior barrier properties (by coating), heat-seal strength (by resin modification or coating), heat-shrink properties (see Films, shrink), printability, and electrical properties. A relatively new addition to the family of oriented films is opaque film. The opacity is produced by a filler and by controlled voiding. A type of decorative ribbon is foamed uniaxially oriented PP with a colorant (see Colorants). Foods stored in restaurants or microwaved are wrapped in films containing chloride. Vinyl chloride produces unsafe emissions upon burning. Polypropylene, as a nonchlorine-type resin, is being studied as an alternative wrap. Various additives have been proposed to overcome insufficient gas barrier and adhesion properties (5).

The use of woven slit tape or slit film for heavy-duty agricultural bags is not a major use in the United States, but these bags compete with jute and other natural fiber in carrying much of the world’s grain. A related product is strapping, which is made by extruding either sheet or tapes. If sheet is extruded, it is subsequently slit (see Slitting/rewinding). The filaments are then stretched while warm to give tensile strength values of $\geq 50{,}000$ psi (>345 MPa), ten times that of unoriented PP.

Nonoriented film is available in thicker gauges and has a softer “hand” at the same thickness. Some applications are release sheets, sanitary products, disposable-diaper layers, bandages, and apparel packaging. The use of PP in composite film and sheet materials is small, but growing rapidly. PP is used in combination with other PP structures, paper, metal foils, fabric (woven and nonwoven), and other plastics. Such composites can be made by coextrusion (see Coextrusion), lamination (see Laminating), or extrusion coating (see Extrusion coating). The motivation for making such structures is often related to barrier properties, temperature resistance, chemical resistance, and cost. The principal market for these products is in food packaging.

Most film processes use PP grades with a MFR in the range of 2–10 g/10 min. Extrusion coating uses materials with flow ranging from 10 to over 60 g/10 min. Selection of the additive package is an important consideration. Printing, winding, static-charge buildup, blocking (sticking together), odor, color, heat-seal strength, and other properties are influenced by the additives.

Injection Molding

Injection molding produces many familiar packaging items, including threaded, dispensing, and pump closures (see Closures); aerosol valves and overcaps (see Pressurized packaging); wide-mouthed jars, totes, crates (see Crates, Plastic), yogurt cups, snuff boxes, cosmetic containers, drug syringes, barrel bungs, dairy tubs, and many others. Most general-purpose PP molding grades are well-suited for packaging. In food and drug packaging, one must ensure that the particular grade is suitable for the product to be packaged. Conventional injection-molding grades span a MFR range of 2 to >70 g/10 min.Generally, the lower-flow materials are tougher and process less rapidly. New polymer production processes can produce very high-flow PP grades without narrowing the MWD. Although less tough than narrow-MWD grades of similar MFR, these grades are more easily molded. Copolymers with MFR up to 70 g/10 min are being used in thin-walled injection-molded (TWIM) containers, notable for quality appearance and ease of printing or decorating. Thin walls allow high productivity, low part weight, and low container cost. By using narrow-MWD or “controlled-rheology” resins, high MFR grades with good toughness can be made. These grades are appropriate choices for thin-walled moldings and for large multiple-cavity molds. They offer better dimensional control, but are not as stiff as broader-MWD material.

Normal homopolymers are brittle at refrigerator temperatures. The use of copolymers is recommended when shipping or use expose the part to low temperature impact.

HEALTH AND SAFETY ISSUES

Except for fire-retardant grades containing antimony, PP is generally a nontoxic material. Many grades are available that comply with FDA requirements for food packaging. PP is used in drug packaging and medical devices. It is fiber-spun for use in undergarments, upholstery, sanitary products, and bandages. It is not soluble at normal temperatures in food and beverages. PP is combustible and burns completely when adequate air is available to the flame. As sold by resin manufacturers, PP is usually in a coarse granular form and presents no unusual fire hazard. If it is finely divided (finer than 200 mesh or 74 μm), however, polypropylene can present a combustible dust hazard as do most organic materials. Like other organic materials (e.g., wood, wool, flour), the products of incomplete combustion include carbon monoxide and can include a number of unpleasant, partially oxidized pyrolysis products (aldehydes, ketones, etc.).

Under most processing conditions, little hazard exists with the use of PP. One should avoid contact with the molten polymer. If the plastic is exposed to air at temperatures above 500°F (260°C), proper ventilation should be used. The autoignition temperature is 675–700°F (357–371°C) for most grades. In summary, there are no unusual risks associated with the use of PP.

MARKETS AND APPLICATIONS

Polypropylene resins, along with polyester resins, are the fastest growing of commodity thermoplastics in the world. In 2006, production was 41.5 million tons with an estimated value of $66 billion (6).

Isotactic polypopylene is well suited for a variety of end uses. Polypropylene is recyclable, and this is an important consideration for packaging products. It can be incinerated without toxic emissions. Typical applications for polypropylene products include fibers and filaments, oriented and cast film, injection-molded products, blow-molded bottles and parts, and thermoformed containers. Random copolymers can be reproduced with excellent optical properties and sealing initiation temperatures in compliance with the U.S. Food and Drug Administration regulations for food contact (1). Polypropylene can be combined with polyethylene as blends for liquid packaging films (7).

BIBLIOGRAPHY

R. C. Miller, “Polypropylene” in A. J. Brody and K. S. Marsh, eds., *The Wiley Encyclopedia of Packaging*, 2nd edition, Wiley, New York, 1997, pp. 765–768.

Cited Publications

1. R. B. Lieberman, “Polypropylene” in the *Kirk–Othmer Encyclopedia of Chemical Technology*, Vol. 20, 5th edition, Wiley, Hoboken, NJ, 2006.
2. J. R. Fried, “Polymer Technology—Part 1: The Polymers of Commercial Plastics,” *Plast. Eng.* **38**, 49–55 (1982).
3. J. R. Fried, “Polymer Technology—Part 3: Molecular Weight and Its Relation to Properties,” *Plast. Eng.* **38**, 27–33 (1982) (Parts 4, 5, and 6 followed).
4. *Annual Book of ASTM Standards*, Vol. 8.0, ASTM International, West Conshohocken, PA, issued annually.
5. M. Iriya and T. Nakao, U.S. Patent 7,323,240 (to Asahi Kasei Life and Leasing Corp.), January 29, 2008.
6. A. Borruso, “Propylene Resins,” *Chemical Economics Handbook,* SRI Consulting, Menlo Park, CA, 2007.
7. A. K. Breck, N. Farkas, and Y. Cai, U.S. Patent Application 2008/8090062, April 17, 2008.

General Reference

N. Pasquini, *Propylene Handbook,* Hanser Publishers, New York, 2005.

POLYSTYRENE

Phillip A. Wagner
John Sugden
The Dow Chemical Company
Midland, Michigan
Updated by Staff

INTRODUCTION

Polystyrene is the parent of the family of styrene-based plastics. By copolymerization of styrene with other monomers, a wide range of properties is obtainable. Polystyrene resin is one of the most versatile, easily fabricated, and cost-effective plastics. The largest end-use is in packaging, which accounts for 18% of expanadable polystyrene world use and 30% of general-purpose polystyrene world use. In 2004, world consumption of expandable polystyrene was $3.7\ X10^6$ t and general-purpose polystyrene was $11.5\ X10^6$ t. An annual average increase of about 3.6% is expected through 2009 (1).

General-purpose polystyrene (Table 1) is often called *crystal polystyrene*, which refers to the clarity of the resin. The commercial success of this resin is due to its transparency, ease of fabrication, thermal stability, low specific gravity, high modulus, excellent electrical properties, and low cost. It is commercially produced by two processes. Suspension polymerization is used primarily to produce foam-in-place beads and ion-exchange resin. The bulk of the resin is produced by solution polymerization in a continuous process consisting of one or more vessels followed by volatile removal at high temperatures and high vacuum. There are three common commercial grades of general-purpose polystyrene: easy flow, medium flow, and high heat. The choice of resin depends mostly on the fabrication method. Easy flow and medium flow are used primarily for injection molding and the high-heat extrusion applications.

High-heat polystyrene, such as Styron 685D (trademark of The Dow Chemical Company), has the highest molecular weight and contains the fewest additives. High-heat resins normally do not contain mineral oil or other flow additives and generally contain a mold release

Table 1. Typical Properties for General-Purpose Polystyrene

Property	ASTM Test Method	Units	High Heat	Medium Flow	Easy Flow
Melt-flow rate (condition G; 200°C/5 kg)	D1238	g/10 min	1.6	7.5	16.0
Vicat softening temperature	D1525	°C	108	102	88
Deflection temperature under load annealed 264 psi	D648	°C	103	84	77
Tensile strength at break	D638	psi (MPa)	8200 (56.6)	6500 (44.8)	5200 (35.9)
Tensile elongation at break	D638	%	2.4	2.0	1.6
Tensile modulus	D638	psi (MPa)	485,000 (3340)	460,000 (3175)	450,000 (3100)
Izod impact	D256	ft · lb/in. (J/m)	0.5 (24)	0.4 (21)	0.3 (16)
Rockwell hardness	D785	M scale	76	75	72
Molecular weight	SEC	Daltons	300,000	225,000	210,000
Molecular number	SEC	Daltons	130,000	92,000	75,000

additive or extrusion aid. The higher heat distortion and toughness are offset by low melt-flow rates. The high molecular weight improves the mechanical properties of the resin and also the ability to induce orientation during fabrication. Orientation of the polymeric chains tremendously increases the toughness of resin. For food-packaging applications, low residual levels are desirable to minimize taste or odor transmission to the food.

High-impact polystyrene (Table 2), sometimes called rubber-modified polystyrene, is normally produced by copolymerization of styrene and a synthetic rubber. This produces a two-phase system consisting of a dispersed rubber phase and a continuous polystyrene phase. This system uses a unique feature of polystyrene to allow elongation by the formation of energy-absorbing crazes. The dispersed rubber particles initiate astronomical numbers of crazes without crack formation, thus contributing to the development of very tough products. By varying the amount of rubber, normally 2–15 wt%, and morphology of the rubber-phase physical properties of the resin can be varied considerably. High-impact polystyrene has lower tensile strength and a tremendous increase in elongation and impact strength. The opacity of high-impact polystyrene precludes its use in applications requiring transparency.

FABRICATION

Processing of polystyrene can be accomplished by most fabricating techniques. Polystyrene resins are among the most widely used thermoplastics for both extrusion and injection-molding applications. Various formulations offer different properties specially suited for specific applications. This also results in slightly different processing conditions. Polystyrene resins are usually processed at melt temperatures of 360–500°F. In extrusion applications, extruders vary significantly in size. Extruder screws can range from small ($\frac{3}{4}$–in.-dia) to large (12-in.-dia) with varying L/D ratios from 20:1 to 42:1. The current trend in extruder design is toward 30:1 and 36:1 ratios using two-stage single screws and vented barrels. Both single- and two-stage screws are used because of polystyrene's excellent stability compression ratios, between 3:1 and 5:1, which are used to achieve good mixing and uniform delivery. Screw cooling of the feed section of the screw is recommended on large extruders when operating at high output rates or when high levels of regrind are being used. Because polystyrene is nonhygroscopic, drying of the granules prior to extrusion is usually unnecessary.

An optimum set of operating conditions can be determined only through experience with a particular extruder. Optimum running conditions require the proper balancing

Table 2. Typical Properties of High-Impact Polystyrene

Properties	ASTM Test Method	Units	Extrusion Resin	Injection-Molding Resin
Melt-flow rate (condition G, 200 °C/5 kg)	D1238	g/10 min	3.0	7.5
Vicat softening point	D1525	°C	100	94
Deflection temperature under load annealed 264 psi	D648	°C	92	82
Tensile rupture	D638	psi (MPa)	2400 (16.6)	2300 (15.9)
Tensile yield	D638	psi (MPa)	2600 (17.9)	2700 (18.6)
Tensile modulus	D638	psi (MPa)	240,000 (1655)	260,000 (1793)
Tensile elongation	D638	%	40	40
Flexural modulus	D790	psi (MPa)	280,000 (1931)	260,000 (1793)
Flexural strength	D790	psi (MPa)	5600 (38.6)	4700 (32.4)
Izod impact notched 73°F	D256	psi (J/m)	1.5 (80.1)	1.6 (85.5)
Rockwell hardness	D785	M scale	29	25

Table 3. Typical Sizes of Injection-Molding Machines

Nominal Rating of Clamping Capacity (kN)[a]	Shot Size (g PS)[b]	Rate of Fill (mL/min)[c]
1335	170–340	131–262
4450	1360–2155	410–738
8900	4536–5100	1148–1476

[a] To convert kN to tons, divide by 8.9.

[b] To convert g to oz, divide by 28.35.

[c] To convert cm^3/min to $in.^3$/min, divide by 16.4.

of many variables such as screw design, extruder size, extrusion rate, extruder conditions, polymer used, and desired end product. Suggested starting conditions using a typical polystyrene screw are as follows:

Hopper	Adequate Flow of Cooling Water
Feed section	350°F (176°C)
Transition section	400°F (204°C)
Metering section	440°F (226°C)

Extruder head pressures range from 1500 to 4000 psi. The die gap is normally set at 10–20% greater than the desired sheet thickness. Polystyrene resins are notably stable materials. Evidence of this is seen in the ability to use regrind and to recycle these resins. Many new packaging applications are being developed through the use of coextrusion. By incorporating layers of other resins such as EVOH and PVDC, barrier properties can be achieved, and the ease of polystyrene fabrication and effective cost and performance of polystyrene can be maintained.

In injection-molding applications, machines vary in size and capacity to permit molding very small to very large parts. Machine cost is primarily a function of clamping capacity, which is the force necessary to hold the mold halves together during high-pressure injection. This is directly related to the pressure needed to fill the mold cavity. Typical sizes are listed in Table 3. For best operating conditions, the preferred shot size is usually about 50–75% of the maximum shot size of the machine.

Cooling time is the major portion of an injection-molding cycle. The cooling times are influenced mainly by part wall thickness and the heat capacity of the polymer. In the case of crystalline polymers (e.g., polypropylene), the heat of crystallization is a large part of the heat that must be removed. The shorter cooling times for amorphous polymers, such as polystyrene resins, allow for higher production rates than are possible with many crystalline polymers. Typical injection-molding conditions for polystyrene are listed in Table 4.

Blow-molding is a multistep fabrication process for maufacturing hollow symmetrical objects. Styrene-based plastics are blow-molded to make speciality bottles and containers. However, blow-molding is primarily a process for polyethylene and poly(vinyl chloride) (2).

APPLICATIONS

Polystyrene is widely used in many packaging applications. These include injection-molded products such as beverage containers, dairy product containers, and packaging for personal care items. Extruded solid-sheet polystyrene products include salad boxes, dairy product and baked good containers, and vending cups and lids. Extruded foam sheet polystyrene packaging products include poultry and meat trays, produce trays, hinged lid containers, egg cartons, and foam cups. Blow- and foam-molded polystyrene products include vitamin bottles and loose fill packaging. Reported newly investigated products are (a) a paper-wrapped polystyrene foam beverage container that provides thermal insulation as well as a means to display high-quality printed matter (3) and (b) a food packaging tray of expanded polystyrene with the ability to absorb liquids inside (4).

RECYCLING

Polystyrene items separated from solid-waste streams are subjected to one or more of the following unit operations: densification, granulation, washing, drying, extrusion, and pelletizing. The pellets obtained have properties similar to virgin resin. Dissolution of polystyrene in various solvents removes solid contaminants. Volatilization and recovery of the solvent produces solid polystyrene for reuse (5). Solid

Table 4. Typical Injection-Molding Conditions

Controls	English Units	SI Units
Barrel temperatures		
Zone 1, feed	375–420°F	190–215°C
Zone 2	400–450°F	204–232°C
Zone 3	430–475°F	221–246°C
Zone 4	430–475°F	221–246°C
Zone 5, adapter	430–475°F	221–246°C
Nozzle	425–460°F	218–238°C
Melt temperature	430–475°F	221–246°C
Mold temperature	70–120°F	20–50°C
Injection pressure	1100–2300 psi	8–16 MPa
Injection pressure	Adjust to control part weight and dimensions	
Injection speed	Variable control, slow–fast–slow, adjust to control appearance	
Backpressure	0–150 psi, higher with concentrates	

waste packing material dissolved in a dimethylbenzene-based solvent produces a viscous fluid that can be used as an adhesive or coating material (6). Food packaging material is not recycled at this time because it is not an economically sustainable process (7). There is a market for nonfood service polystyrene recycling.

BIBLIOGRAPHY

P.A. Wagner and J. Sugden, "Polystyrene" in A. J. Brody and K. S. Marsh, eds., *The Wiley Encyclopedia of Packaging*, 2nd edition, Wiley, New York, 1997, pp. 768–771.

Cited Publications

1. A. Borruso, "Polystyrene," *Chemical Economics Handbook,* SRI Consulting, Menlo Park, CA, 2005.
2. D. B. Priddy, "Styrene Plastics," in *Kirk–Othmer Encyclopedia of Chemical Technology*, Vol. 23, 5th edition, Wiley, Hoboken, NJ, 2007.
3. L. Bresler, U.S. Patent Application 20060131316, June 22, 2006.
4. C. Christodoulou, U.S. Patent Application 20060060478, March 23, 2006.
5. J. K. Borchardt, "Recycling, Plastics," *Kirk–Othmer Encyclopedia of Chemical Technology*, Vol. 21, 5th edition, Wiley, Hoboken, NJ, 2006.
6. Z.-Z. Yuan, U.S. Patent Application 20070249741 (to U.S. Hu Bang Co., Ltd.), Oct. 25, 2007.
7. "Polystyrene, General Information," Plastics Foodservice Packaging Group, American Chemistry Council, www.americanhemistry.com/s_plastics (accessed March 2008).

POLYVINYLIDENE CHLORIDE (PVDC)

DONG SUN LEE
Department of Food Science
and Biotechnology, Kyungnam
University, Masan, Gyeongnam,
Republic of Korea
KIT L. YAM
Department of Food Science,
Rutgers University,
New Brunswick,
New Jersey

Polyvinylidene chloride (PVDC) is a copolymer of vinylidene chloride (usually 70–90 mol %) and other monomers including vinyl chloride, acrylronitril, and alkyl acrylate. Homoploymer of vinylidene chloride (VDC) is not used in commerce. PVDC has been an important contributor to the plastic packaging that has increased the fraction of processed foods reaching the dinner table. PVDC provides exceptionally low permeabilities to gases and liquids. Furthermore, they are resistant to attack by many chemicals and are inert to most foodstuffs.

The overwhelming fraction of PVDC is used for food packaging. Lesser amounts are used for other packaging applications, fibers, specialty binders, and molded parts. The volume of PVDC use in packaging is small with the proportion less than 0.5% of the total polymers in Europe. The world market demand of PVDC resins is estimated as about 80,000 metric tons, in which 66% are for extrusion, 22% for solvent coating, and 12% for latex.

CHEMISTRY

Homopolymer of vinylidene chloride is not commercially useful because of its crystallinity and thermal instability. The melting temperature of the homopolymer is about 202°C, and the level of crystallinity is greater than 60%. Crystallization from the melt is rapid. As an extrudable resin, the polymer needs to be heated above the melting temperature for a few minutes. The degradation rates above 200°C are too rapid to allow time for extrusion. As a latex, the homopolymer can crystallize in the particles. Then, during drying after coating, the particles will not fuse to give a continuous film. As a resin for solvent coating, the crystals are too stable to be dissolved by convenient methods.

Copolymerization alleviates the problems with the homopolymer. A comonomer decreases the lamellar thickness of the crystals and lowers the melting temperature. A comonomer decreases the rate of the crystallization and allows a latex to remain completely amorphous longer. Hence, the casting will fuse easily and then crystallize. A comonomer gives a semicrystalline material that can dissolve in convenient solvents.

Vinylidene chloride is colorless liquid readily dissolving in most organic solvents, and it undergoes free-radical polymerization with many other monomers to form solid particles. The commercially important comonomers are vinyl chloride (VC), acrylonitrile, and methacrylonitrile, along with various methacrylates and alkylacrylates. For extrudable resins, vinyl chloride or methyl acrylate is commonly used to depress the melting temperature to the range of 140–175°C. For latex coatings, an alkylacrylate or alkylmethacrylate is used as comonomer. Terpolymers are common, and in some cases a surface active comonomer is included such as acrylic acid or 2-sulfoethyl methacrylate. For solvent coatings, acrylonitrile and methacrylonitrile are the most common comonomers.

Most extrudable resins are made in suspension by free-radical polymerization. The monomers are dispersed as droplets in water and stabilized by a protective suspending agent such as polyvinyl alcohol or methylcellulose. An oil-soluble free-radical initiator is used. The result is a free-flowing collection of nearly spherical, porous particles with diameters in the range of 200–300 μm.

Latexes are made by a free-radical, emulsion polymerization. Often, monomers are continuously added to the reaction vessel during polymerization. The latexes must be stabilized with surface active agents to prevent coagulation.

Resins for solvent coating are also made through a free-radical, emulsion polymerization. Often, monomers are continuously added into the reaction. A minimum amount of surface active agent is used because the higher amount deteriorates the stability of the polymer which should go through coagulation, dewatering, and drying after the polymerization step. Common solvents used in the coating include tetrahydrofuran (THF) or methyl ethyl ketone with toluene.

In addition to those materials that are required for polymerization, certain additives are commonly used with PVDC copolymers. Plasticizers, stabilizers, and extrusion aids are included in extrudable resins at low levels for high barrier applications and moderate levels for less demanding applications. A latex may contain an antimicrobial compound. A resin for solvent coating will contain some of the salt used to cause coagulation.

PVDC can degrade at elevated temperatures, thereby releasing HCI and leaving a double bond in the polymer backbone and consequently generating an allylic dichloromethylene unit susceptible to facile thermal radical dehydrohalogenation. Hence, at low levels of degradation a series of conjugated double bonds are formed which may impart color to the polymer. In extreme cases, the degradation can lead to a brittle char and even to carbon. The degradation is also catalyzed by Lewis acids, particularly iron cations formed from the interaction of process equipment with evolved hydrogen chloride. Hence, extrusion of PVDC resins should be done using the proper materials of construction and with training by experts. Strong bases can also cause degradation of PVDC. For example, contact with organic amines is not recommended, because such agents act to introduce the double bond sites initiating rapid thermal degradation.

GENERAL PRINCIPLES

All PVDC copolymers have certain common characteristics. Commercial copolymers have molecular weight ranges of about 65,000–150,000. Molecules of lower molecular weights tend to be brittle and have limited commercial value. The physical and chemical properties of copolymers depend largely on the VDC content, which ranges from 72 to 94 wt% in most commercial products. The axial symmetry of the VDC molecule permits tight packing of molecular chains with concomitant formation of crystals constituting 25–45 vol% of the total structure. Specific gravities range from 1.65 to 1.75.

These characteristics of PVDC resins are not significantly altered by the small amounts of processing and stabilizing aids used to facilitate extrusion and molding. A representative extrudable resin is a VDC–VC copolymer with about 85% VDC and a molecular weight of 120,000, with plasticizer sufficient for ease of extrusion.

Table 1. Transport Properties of a High-Barrier PVDC Extrudable Resin in Film or Sheet Form

Property	Value
Gas permeabilities at 23°C (73°F) (nmol m^{-1} s^{-1} GPa^{-1})[a]	
Oxygen	0.04–0.30
Nitrogen	0.02–0.10
Carbon dioxide	0.10–0.50
Water vapor transmission rate (WVTR) at 38°C (100°F), 90% RH (nmol m^{-1} s^{-1})[b]	0.01–0.10

[a] Multiply by 0.50 to obtain $cm^3 \cdot$ mil/(100 in.^{2} day atm).
[b] Multiply by 3.95 to obtain g $\cdot$ mil/(100 in.^{2} day).

Note that the barrier and strength properties of PVDC depend on the chemical compositions of the molecules, the degree of molecular orientation, and the direction of orientation in the finished form. Relatively high VDC content imparts relatively high barrier properties and gas resistance. A comparatively high degree of orientation imparts tensile strength. Higher crystallinity correlates with lower permeability.

PROPERTIES

The properties of PVDC copolymers most pertinent to food packaging include a unique combination of low permeability to atmospheric gases, moisture, and most flavor and aroma bodies and stress-crack resistance to a wide variety of agents. In addition, the ability to withstand the rigors of hot filling and retorting is important in commercial sterilization of foods in multilayer barrier containers.

The range of barrier properties for small molecules in extrudable resins is shown in Table 1. Furthermore, PVDC is excellent barrier to flavor and aroma compounds. The three major types of household film are compared in Table 2. A high-barrier PVDC film would have much lower permeabilities. The general-purpose and high-barrier films are compared in Table 3.

The bulk mechanical properties of PVDC-coated papers, films, and structures such as formed containers and blown bottles depend almost entirely on the properties of

Table 2. Permeability of Household Films at 25°C to Selected Permeants

Permeant	Plasticized PVDC (Saran Wrap™)	Film Type Plasticized PVC (Reynolds Plastic Wrap™)	Polyethylene (Handi-Wrap II™)
Oxygen (nmol m^{-1} s^{-1} GPa^{-1})[a]	1.9	220	640
Water vapor at 38°C, 90% RH (nmol m^{-1} s^{-1})[b]	0.055	0.30	0.19
d-Limonene (MZU)[c]	1.3×10^2	1.1×10^5	3.3×10^5
Dipropyl disulfide (MZU)[c]	1.1×10^4	3.3×10^6	6.8×10^6

[a] Multiply by 0.50 to obtain $cm^3 \cdot$ mil/(100 in.^{2} day atm).
[b] Multiply by 3.95 to obtain g $\cdot$ mil/(100 in.^{2} day).
[c] MZU = 10^{-20} kg m/(m^2 s Pa).

Table 3. Properties of PVDC Films[a]

Property	ASTM Test Method	Type of Film General-Purpose	 High-Barrier
Specific gravity	D 1505	1.60–1.71	1.73
Yield (m^2 film/kg resin)		23	23
Haze (%)	D 1003	5	2–3
Clarity (%)	D 1746	52–65	80
Tensile strength (MPa)	D 882		
MD[b]		48.3–100	82.8–86.2
XD[c]		89.7–93.1	138–148
Elongation (%)	D 882		
MD[b]		40–100	95–100
XD[c]		40–100	50–60
Tensile modulus, 2% secant (MPa)			
MD[b]		345–759	1,103–1,138
XD[c]		310–724	931–1,034
Tear strength propagating (N mm^{-1})	D 1922	3.9–38.6	3.9–38.6
Folding endurance (cycles)	D 2176	> 500,000	> 500,000
Change in linear dimensions at 100°C (212°F) for 30 min (%)	D 1204		
MD[b]		12–22	6–7
XD[c]		6–18	3–4
Service temperature (°C)		−18 to 135	−18 to 135
Heat-seal temperature (°C)		121–149	121–149
Oxygen permeability at 23°C (73°F), 50% RH[d] (nmol m^{-1} s^{-1} GPa^{-1})	D 1434	1.6–2.2	0.16
WVTR at 38°C (100°F), RH 90% (nmol m^{-1} s^{-1})		0.06	0.02
Coefficient of friction, face-to-face, back-to-back, at 23°C (73°F) and 50% RH	D 1894	0.3 to no slip	No slip

[a] Film 1 mil (25.4 μm) thick. Not to be confused with Saran Wrap™ household brand film.

[b] Machine (longitudinal) direction.

[c] Transverse direction.

[d] Humidity has no effect on the permeability of PVDC films.

the substrate material. On the other hand, the PVDC coating controls the specialized attributes providing barrier to permeation, chemical resistance, or heat or dielectric sealability to the substrate (see Table 4).

APPLICATIONS: EXTRUDABLE RESINS

Flexible Films

Monolayer films are used for household wrap, as unit-measure containers for pharmaceuticals and cosmetics, and as drum liners and food bags. Multilayer films, generally coextruded with polyolefins, are used to package meat, cheese, and other moisture- or gas-sensitive foods. The structures, which contain 80–90% polyolefin with an inner layer of PVDC, are usually shrinkable films that provide a tight barrier seal around the food product.

Semirigid Containers

PVDC is used as barrier layer in semirigid thermoformed containers. The sheet can be produced by coextrusion or by laminating monolayer or coextruded PVDC films to semirigid styrenic or olefinic substrates. PVDC can also be used as barrier layer in blow-molded bottles.

APPLICATIONS: COATINGS

Generally preferred forms of PVDC coatings on various substrates are shown in Table 5. Pretreatment with primers or electrotreatment may be required on some substrates. The form of the package (i.e., film, thermoformed sheet, or blown bottles) influences the choice as well, but the key differentiating elements are the porosity and chemical composition of the substrate.

Table 4. Properties of PVDC Films[a]-Made from Aqueous Latexes and from Solutions

Properties	Latexes[b]-Selected for High Barrier	 High Seal Strength[c]	Solution Resins[d]
Oxygen permeability at 23°C(73°F) (nmol m^{-1} s^{-1} GPa^{-1})	0.06–0.20	0.20	0.04-0.20
WVTR at 38°C (100°F) and 90% RH (nmol m^{-1} s^{-1})	0.012–0.015	0.012–0.380	0.005–0.025
Minimum heat-seal temperature (°C)	132	82	104–129

[a] Oven-dried films.

[b] Cast on PET film from dispersions.

[c] Heat and dielectric-sealing grades available.

[d] Cast from solutions of up to 20 wt% solids in 65% THF or methyl ethyl ketone/35% toluene (wt/wt) at 23–35°C (73–95°F).

Table 5. Suggested Coatings for Various Substrates

	Coatings	
Substrates	Latexes	Solutions
Cellophane		X
Nonporous papers[a]	X	X
Porous papers	X	
Polyolefins	X	X
Polyesters	X	X
Polyamides (nylons)	X	X
Styrenics	X	
Vinyls (PVC)[b]	X	

[a] Includes coated and dense forms, such as glassine.

[b] Plasticizers in highly plasticized PVC may migrate to the PVDC coating, thereby damaging the coating's effectiveness as a barrier.

Paper and Paperboard

Paper and paperboards coated with PVDC latex are used where moisture resistance, grease resistance, oxygen barrier, and water-vapor barrier are required.

Cellophane

About 90–95% of all cellophane produced in North America is coated with PVDC solution coatings to render the films moisture-resistant (thereby retaining the high gas barrier inherent to dry cellophane) and provide the needed moisture barrier.

Plastic Films

Latex coatings on plastic films provide barrier to gases, moisture, flavors, and odors, and, in some packaging, heat-seal capability. Heat-seal latexes are not often good gas barriers, and, conversely, the best PVDC barriers do not usually provide the best seals. When both heat sealability and barrier are required, it is best to apply two coatings, each designed for one purpose.

Semirigid Containers

Latex coatings impart barrier properties to thermoformable plastic sheet used to produce high-barrier food containers. Latex coatings on polyethylene terephthalate (PET) bottles impart barrier to oxygen, carbon dioxide, water, flavors, and odors.

PRODUCERS

The principal producer/suppliers of PVDC in forms of extrudable resin, latex emulsion, and solvent soluble resin include Dow Chemical, Asahi Kasei, Kureha Corp., Owensboro Specialty Polymers, Rohm and Haas, and Solvin. The Dow Chemical Company, the first developer and producer of PVDC film, produces Saran™ resins and films plus SARANEX™ multilayer films coextruded with polyolefins.

REGULATORY STATUS

VDC–VC copolymers containing about 10–27 wt% VC are considered to comply with the food-additive provisions of the Federal Food Drug and Cosmetics Act on the basis of "prior sanction". A variety of specific regulations govern PVDC copolymers other than those of VC. The potential user is encouraged to work with the supplier to compare the current regulations with the application.

BIBLIOGRAPHY

General References

P. T. DeLassus, W. E. Brown, and B. A. Howell, "Vinylidne chloride copolymers" in A. L. Brody and K. S. Marsh, eds., *The Wiley Encyclopedia of Packaging Technology 2nd edition,* John Wiley & Sons, New York, 1997, pp. 958–961.

R. A. Wessling, D. S. Gibbs, B. E. Obi, D.E. Beyer, P.T. DeLassus, and B. A. Howell, "Vinylidne chloride polymers" in *Kirk–Othmer Encyclopedia of Chemical Technology (Online)*, http://www3.interscience.wiley.com/cgi-bin/mrwhome/104554789/HOME, John Wiley & Sons, Hoboken, NJ, 2005. DOI: 10.1002/0471238961.2209142523051919.a01.

R. A. Wessling, *Polyvinylidene Chloride*, Gordon and Breach, New York, 1977.

PRESSURE CONTAINERS

MONTFORT A. JOHNSEN
Montfort A. Johnsen &
Associates, Ltd., Danville,
Illinois

Several distinct classes of pressure containers exist. All are used to dispense the contents into either open or closed environments. Among the largest are Hortonspheres, with capacities exceeding 1 million gal (3,850,000 L). For transport purposes, the largest pressure containers are "jumbo" tankcars, with capacities of about 31,000 gal (117,000 L). Cylinders down to about 500 gal (1900 L) are designated as bulk tanks. Smaller ones are variously known as "pig tanks," "ton cylinders," or simply as cylinders. Sometimes the intended use serves to identify the general size and shape as in the case of "propane cylinder" or "lecture bottle."

Pressure containers in sizes ranging from 3 to 1000 mL are used to dispense consumer specialties. In two of these, the primary container is pressurized. The most popular is the aerosol, where pressure is generated by a propellant gas. The other uses mechanical pressure from springs or elastomers under tension to propel products from a flexible inner container. A third form is the mechanical pump, such as the finger-pump or trigger-spray dispenser, in which pressure is generated by the user, but only within the valve body. In 2006 an estimated 3.65 billion aerosols were produced in the United States. The remainder of this article is restricted to aerosols (see also Aerosol containers).

An aerosol composition normally consists of a combination of concentrate and propellant. The propellant portion can range from about 0.5% to 100%, and at the 100% end the propellant functions as the product itself. The regulatory definition of an aerosol [by the U.S. Department of Transportation (DOT)] is a product that consists of "chemical ingredients pressurized by compressed gas." In a 1991 clarification the DOT further required that the product name reflect the intended use of the concentrate ingredients. This was designed to halt interstate shipments of commodities, under aerosol exemptions, which contained flammable propellants—to which trace amounts of two or more incidental chemicals had been added, with the sole purpose of satisfying the aerosol description in the tariff.

Virtually all aerosols are fitted with valves, for the purpose of dispensing the contents—most often in spray forms, but also as foams, streams, gels, gases, lotions, pastes, ointments, and so forth. Limited numbers of aerosols are packaged with screw-threaded closures, designed to be connected to valve-and-hose assemblies for such purposes as air-conditioner refills. About a dozen firms produce aerosol valves, and they offer a bewildering array of diverse styles, orifices, materials, and associated fitments. The scope of aerosol products is surprisingly large. Every consumer and institutional and/or industrial product category is included, such as pesticides, household products, pharmaceuticals, drugs, foods, cosmetics, and medical devices. Some liquid streams can be propelled 25 ft (8 m) to reach wasp nests and kill the insects and their eggs. Compressed-gas jets may be used to dedust the surfaces of electronic circuit boards, tapes, and CDs (compact disks). Sterile saline solutions are available for flushing cleaning solution residues from contact eyewear. Cheese and jelly products can be cleanly extruded from special valves onto other food items. Gels can be produced that magically spring into foams when stroked with the fingertip. Unlike pump sprayers, aerosols can produce sprays with an optimum particle size distribution for maximizing their knockdown and cidality to flying insects. Particles are produced that are small enough to remain airborne for long periods, yet not so small that they airflow around the bodies of flying pests. As a result, a maximum number of insects are impacted by lethal doses.

The scope of aerosols has been enhanced by the steadily growing numbers of bag-in-can and piston can products now on the market. The product is partitioned from the propellant by placing it inside a collapsable plastic, metal, or composite laminated bag, or above a piston. The propellant then simply acts to pressurize the system. Nonaerated products, such as lithium grease, toothpaste, gels, artist's pigment dispersions, and standard chemical solutions, can then be dispensed. Product viscosities up to about 2,000,000 cP can be easily handled. Originally restricted to the 2.125-in. (52-mm)-diameter aerosol can, these compartmentalized aerosols are now available in diameters ranging from about 1.378 in. (35 mm) to 2.588 in. (65.7 mm) and in several heights.

Among the myriad aerosol valve designs is the meter-spray type. Originally designed to dispense costly perfumes in dosages of about 0.02–0.05 mL, the primary use has now shifted to the metered-dose inhalents (MDIs).

AEROSOL CONTAINERS

About 82% of all aerosols produced in the United States during 2006 were steel [actually about 80% electrotinplate (ETP) and 5% electrochrome-coated steel (ECCS)]. Aluminum accounted for about 18%, while glass, plastic-coated glass, stainless steel, and plastic totaled about 1%. Terephthalate (B-OPET) should decrease because of reinterpretations of certain DOT shipping regulations.

The percentage of aluminum cans in U.S. aerosol units is perhaps the lowest in the world. Most countries use about 60% steel, 40% aluminum, and virtually no other container materials. The low percentage of aluminum in the United States is considered to be due to three factors: The consumer culture demands less packaging elegance, more large-size utility products are sold, and the prices of aluminum cans are significantly higher.

Steel

The usual steel aerosol can is produced from electrolytically tinplated sheet, and it consists of three segments: top (dome), body, and bottom (base). In the United Kingdom the top is called the *cone* and the base is known as the *dome*, which has led to some confusion in nomenclature from time to time. In 2007, the U.S. suppliers are the Crown Cork & Seal Company, B'way Corp. Aerosols Inc., Ball Corporation Aerosols and Packaging, The Sexton Can Company, and McKernan Packaging and Clearing House.

The Sexton Can Company produces both one-piece (35- and 38-mm) drawn cans and a line of two-piece cans, where a top shell is sealed to the base by double-seaming. A major portion of these last cans is used for pure HCFC-22 and HFC-134a air-conditioning and refrigerant gases, under two special DOT exemptions, since their pressures exceed the standard aerosol limits.

DC Containers Inc. is a newer firm. Their containers are unique in that about 92% of the sidewall is drawn and ironed to a thickness of only 0.0038 in. (0.096 mm). This operation acts to elongate the base–body "cup," formed by ordinary extrusion techniques. The cup is then trimmed to height and eventually double-seamed to an aerosol dome. For the small (35- and 38-mm diameter) cans, the drawn and ironed bottom shells are trimmed and then formed into a rounded dome and curl by a multistage ("female" only) die-shaping operation. They also produce two large sizes of 65-mm steel cans using the Protact process (Aerosol Containers).

It is not unusual for the can body of a three-piece steel aerosol can to represent about 65–75% of the total weight, depending on the can height. If the draw–iron process effectively thins some 92% of the body metal to half the normal thickness, the weight of the body will be reduced by some 46% and the weight of the entire can will diminish by about 32%. As a rule, about half the final net cost of the aerosol can is due to the cost of tinplate, so it follows that a 32% reduction in metal will equate to about a 16% reduction in can cost. This economic fact has many marketers interested in testing these new cans. Claims of environmental source reduction, lack of the slightly unsightly side seam and bottom double seam, and some other stated advantages serve to enhance interest.

The thickness of tinplated steel plate is specified in terms of the weight per "basis box" (see Cans, steel; Tinmill products). The *basis box* was an accounting term developed about 1730 in Pontypool, England and was used to note the weight of 112 tinplated steel sheets, 14 in. wide by 20 in. long (35.6 mm × 50.80 mm), thus having an area of 31,360 in.^{2} (20.2325 m^2) on each side. The Pontypool steel plate averaged 100 lb (45.45 kg) per basis box. After tinplating, it weighed about 101–102 lb per basis box; when crated, it constituted a load that was not overly heavy for Welsh longshoremen employed in lading ships bound for canmaking shops in London and continental Europe.

Untinned steel plate weighing 100 lb (45.45 kb) per basis box has an average thickness of 0.0110 in. (0.280 mm). The plate is simply called "100-lb stock." The thinest base weight steel now made is 47 lb (0.0052 in.) thick. It is experimental, but may find use in beer and beverage cans. For aerosol cans the minimum plate thickness is often important in meeting the DOT requirements. The steel-mill tolerance is usually ±10% on thin, canmaking plate, but the can companies have been successful in insisting that the 3σ (three-sigma) tolerance be −6% to 10%. For example, the very strong double-reduced temper 8 (DR-8) 75-lb stock widely used for aerosol can bodies will have a steel thickness range of 0.00776–0.00908 in. (averaging 0.00825 in. or 0.210 mm). The cause of this apparently large variability comes from the upward distortion of the heavy-duty rollers, used to make the plate, causing the center portion of the typical 54-in. (1.37-m)-wide strip to be thicker than at the edges.

The old English basis-box system was introduced to the United States in 1829, when the first tinplate was imported from Wales. It continued to be used in 1858 when the first tinplate was manufactured here. Although the English have (officially) converted from basis box to metric measurements, the United States has yet to do so.

Prior to 1937, all tinplate was produced by the hot-dip method, with both sides being coated equally. If 1.00 lb of tin was deposited per basis box, this meant that 0.50 lb was laid down on each side. Technically, such plate could be designated as 0.50/0.50-lb (227/227-g) ETP. When electrodeposition of tin became practical on a large scale, it also became possible to differentially coat the two sides of a given steel sheet. This advance led to some changes in nomenclature. The rule is to designate the tin weight on each side as if the plate were nondifferentially coated. For example, if 1.00 lb of tin were deposited per basis box, but with 0.75 lb on one side and 0.25 lb on the other, the designation would be D-150/50, meaning that the more heavily tinplated side would have the same weight of tin as nondifferential 1.50-lb plate and the light side would have the equivalent of nondifferential 0.50-lb plate. The nominal tin-coating weight on each side would be 0.375/0.125 lb (170/42.5 g). In the metric system, this plate would be designated as having an average of 16.8 g/m^2 of tin on the more heavily plated side and an average of 4.2 g/m^2 on the lighter side.

Differential plate is normally marked on the more heavily plated side, sometimes with a "D," but also with various lines, hexagons, triangles, or other figures, imprinted by roll printing a dilute solution of sodium carbonate onto the tin coating, prior to flow melting. This prevents plate reversal problems during canmaking. As a rule, the more heavily tinplated surface is oriented toward the product, to reduce possible corrosion. In a few instances, very lightly tinplated plate, such as D-05/15, is placed with the heavily tinned surface facing the atmosphere. An example is where the product is quite alkaline, such as some oven cleaners or other hard-surface cleaners, which quickly dissolve the amphoteric tin metal. In fact, the 0.05-lb tin coating is so thin and incomplete that the dark gray $SnFe_2$ alloy layer and gray steel itself can be seen through it. In this case the free tin is typically 1.36 μin. thick and the underlying $FeSn_2$ layer is about 0.19 μin. (0.08 g/m^2). By using the heavier 0.15-lb tin coating on the outside of the can, the white, shiny surface of the tin improves appearance. It even brightens the lithography in some instances.

Different thicknesses of tinplated steel plate are used in the preparation of three-piece aerosol cans. As can size increases, heavier plate must be used to obtain the same pressure resistance. The end sections (dome and base) are typically 60–80% thicker than the can body. They must resist eversion and possible separation, under high-pressure conditions. Even with can bodies as thin as about 0.004 in. (0.10 mm), the so-called "hoop effect" prevents any swelling or bursting, unless the body metal is softened by strong heating—as in a fire.

Plates used for three-piece cans extend from about 60 to 135 lb per basis box. Bodies range from 60 to 90 lb (0.0066–0.0099-in., or 0.168–0.251-mm average thickness), while end sections extend from 90 lb on small 112-diameter (45-mm) cans to 135 lb on the large 300-diameter (76-mm) containers. The use of these plate thicknesses, along with the basic pressure-resistant architecture of aerosol containers, allows even the lowest-strength cans to resist pressures to at least 160 psig (lb/in.^{2} gauge) (1.2 MPa) without deformation, and up to at least 226 psig (1.7 MPa) without bursting.

The canmaking plate is also continuously annealed to provide various tempers, or stiffness levels. Annealing also serves to remove certain work-hardening effects, obtain the desired mechanical properties, and achieve an optimum grain structure. The annealing process is fairly rapid. Plate is unreeled into an inert atmosphere oven and heated to about 1250°F (677°C) for about 20 s, then allowed to cool to 900°F (482°C) across the following 25–30 s. The rate of this initial cooling determines temper. The highest tempers are achieved by using the slowest rates of cooling—to allow the formation of a larger number of cementite (Fe_3C) grains per unit volume of the steel. For example, the very stiff temper No. 5 (or T-5) plate contains about 15,000 grains of cementite per mm^3. The various

Table 1. Tempers of Electrotinplated Steel (USA)

Temper Number	Hardness Range[b]	Aerosol Canmaking Applications
1	46–53	No longer used
2	50–56	Not used for aerosol cans
3	53–60	Sometimes used for can domes
4	58–64	Used for can bodies and commonly used for can domes
4-CA	54–68	No longer used for aerosols
5	62–68	Some slight use for can bodies
5-CA[a]	62–68	Used for can bases; some bodies
6	67–73	Now obsolete for aerosols
DR-7	72–76	Minor use for can bodies
DR-8	N/A	Used for most can bodies
DR-9	N/A	Not used
DR-10	N/A	Not used

[a] 5-CA is the successor to the “TU” plate of 1950–1985.

[b] Rockwell tester; R30 T range. Not applicable to DR-8, DR-9, and DR-10 plates, since the hardened ball pierces the tough, stiff plate before forming a depression. The preferred method for testing DR plate is by tensile strength. DR-9 and DR-10 are used for three-piece steel beer and beverage cans. Some aerosol testing is in progress. Tempers are inapplicable to impact-extruded and impact-extruded drawn-and-ironed shells.

tempered steels and their aerosol canmaking used are illustrated in Table 1.

The thickness and temper of aerosol canmaking plate must meet certain general guidelines. However, there are considerable variations between canmakers, regarding selection. The data presented in Table 2 can be considered as indicative only.

The plate for aerosol can bodies begins with multistage hot rolling, down to a thickness of about 0.10–0.06-in. (2.5–1.5 mm). The plate is then cold-rolled (temperature below ∼500°C) into a thickness range of ∼0.0014–0.0065 in. (0.036–0.017 mm). It is then annealed. This produces “CR,” or cold-reduced plate of the desired temper. CR plate is still widely used in can bodies. To make “DR,” or

Table 2. Thickness and Temper for Tinplate Used for Aerosol Cans

Weight per Base Box, lb (kg)	Average Thickness, in. (mm)	Typical Temper Designation	Typical Application	
			Component	Can Diameter (mm)[a]
55 (25)	0.0061 (0.155)	DR-8	Body	202 (54)
65 (29)	0.0072 (0.183)	DR-8	Body	207.5 (62.7)
70 (32)	0.0077 (0.196)	DR-8	Body	211 (68.3)
70 (32)	0.0077 (0.196)	T-5	Body	202 (54)
75 (34)	0.0083 (0.211)	DR-8	Body	300 (76.2)
75 (34)	0.0083 (0.211)	DR-8 or T-5	Body, DOT Specification 2P	202, 207.5, 211 (54, 62.7, 68.3)
80 (36) 0.0088	(0.224)	DR-8	Body	300 (76.2)
85 (39) 0.0094	(0.239)	DR-8	Body, DOT Specification 2Q	202, 207.5, 211 (54, 62.7, 68.3)
			Body, DOT Specification 2P	300 (76.2)
90 (41)	0.0099 (0.251)	T-5	Body, including DOT Specification 2P	300 (76.2)
107 (49)	0.0118 (0.300)	T-5	Bottoms	113, 202 (30, 54)
112 (51)	0.0123 (0.312)	T-5	Bottoms	207.5 (62.7)
112 (51)	0.0123 (0.312)	T-3	Domes	202 (54)
118 (54)	0.0130 (0.330)	DT-2	Domes	207.5 (62.7)
123 (56)	0.0135 (0.343)	T-5	Bottoms	211 (68.3)
128 (58)	0.0141 (0.358)	T-3	Domes	211 (68.3)
128 (58)	0.0141 (0.358)	T-5	Bottoms, including DOT Specification 2P	211 (68.3)
			Bottoms	300 (76.2)
135 (61)	0.0149 (0.378)	DT-2	Domes, including DOT Specification 2P	300 (76.2)
			Domes, including DOT Specifications 2P and 2Q	211 (68.3)
135 (61)	0.0149 (0.378)	T-5	Bottoms, including DOT Specification 2P	300 (76.2)

[a] $202 = 2\frac{2}{16}$–in. (54-mm) dia, etc.

double (cold)-reduced plate, one starts with CR plate that is ~0.018–0.013-in. thick. Having annealed it, the stock is again cold-reduced, up to 50% in one pass, to produce tinplate with a thickness range of ~0.0094–0.0065-in. This corresponds to 85–60-lb DR tinplate—the gauges normally used in can-body constructions. The advantages of DR plate are that ~10–12% less weight can be used, compared to CR plates, while retaining the same strength. The lower apparent cost is offset by the higher manufacturing cost of the plate (since another operation is involved), a very slightly higher scrap rate, and sometimes a bit more variability in the double seams.

DIMENSIONS

The size of tinplate aerosol cans is still described as the diameter across the double seams, multiplied by the height from the base to the top of the top double seam. These designations nearly always have three digits, unless the can is extremely tall. The first is the inch value, and the next two are the number of $\frac{1}{16}$–in. increments added. Thus the over-the-seams diameter of a standard (non-necked-in) 202-diameter three-piece can would be 2.125-in. This corresponds to 53.99 mm, but this can be misleading, since the International Organization for Standardization (ISO) utilizes the inside diameter of the can for "can diameter," and in this case their figure (expressed to the nearest millimeter) is 52 mm.

A selection of commercially available, standard (straight-wall) three-piece cans is shown in Table 3.

Table 3. Dimensions and Capacities of Standard Three-Piece Cans[a]

Nominal Size (English)	Nominal Size (Metric)	Capacity[b] (mL)
202 × 214	52 × 73	147
202 × 314	52 × 98	192
202 × 406	52 × 111	226
202 × 505	52 × 135	270
202 × 509	52 × 141	290
202 × 700	52 × 178	367
202 × 708	52 × 191	391
207.5 × 413	57 × 122	332
207.5 × 509	57 × 141	389
207.5 × 605	57 × 160	452
207.5 × 701	57 × 179	498
207.5 × 703	57 × 183	508
207.5 × 708	57 × 191	527
207.5 × 713	57 × 198	541
211 × 410	65 × 117	396
211 × 503	65 × 132	438
211 × 600	65 × 152	499
211 × 604	65 × 159	522
211 × 607	65 × 164	539
211 × 612	65 × 171	567
211 × 710	65 × 194	648
211 × 713	65 × 198	657
211 × 908	65 × 241	796
211 × 1008	65 × 266	872
300 × 709	73 × 192	796

[a] Metric measurements are by ISO convention.
[b] Capacities are on a brimfull basis. Subtract about 3 mL for crimped cup volume.

Several can diameters are now available in the necked-in style that are not available in the older, straight-wall can (e.g., 113, 205, and 214). The diameter over the top double seam is less than the diameter of the can body, and this has led to a curious nomenclature, where the top-seam diameter is described, followed by that of the can body, and then the height over the double seams. For example, the smallest three-piece tinplate can is described as a 111/113 × 214 container, and the largest is a 211/214 × 1006 can. The necked-in cans are more aesthetically pleasing than the standard or straight-wall types. They are also lighter. Because there are no protruding double seams, they fit into slightly smaller corrugate or tray/shrink-wrap shippers. An idea of the diverse necked-in can sizes can be seen from Table 4.

Construction and Linings. See the article on Aerosol containers.

PRESSURE RESISTANCE

The 70°F pressure range of aerosols is generally about 20–142 psig (320–1100 kPa), although most fall in the 30- to 100-psig (360- to 791-kPa) range. However, all aerosols having a capacity of more than 4.00 fl oz (118.2 mL) are regulated by the DOT Dangerous Goods Transport Tariff. Cans are divided into four groupings. The "nonspecification" can may be used for products having pressures of ≤140 psig (9.66 bars) at 130°F (54.4°C). They must hold the product, when heated to 130°F, without leakage or permanent distortion and must also tolerate a pressure one and one-half times that high without bursting. This can probably account for 85% of all steel aerosol-can sales.

The "DOT Specification 2P" can may be used with aerosols having pressures as high as 160 psig (11.03 bars) at 130°F (54.4°C), but must satisfy several requirements. They must not distort at 160 psig and must not burst below 240 psig (16.55 bars). They must have a minimum plate thickness of 0.007-in (0.0178 mm) and be imprinted with both the words "DOT-2P" and the registered canmaker's logo. One can in 25,000 must be pressure-tested to destruction to prove strength. Some canmakers reduce plate inventories by offering the same can specification for "nonspecification" and "DOT Specification 2P" containers; they simply omit the imprints and destructive testing in the case of "nonspecification" cans.

The third grouping consists of "DOT Specification 2Q" cans. They can be used with products having pressures of ≤180 psig (12.41 bars) at 130°F. The cans must tolerate 180 psig without deformation, and they must withstand 270 psig (18.62 bars) without bursting. The minimum plate thickness is 0.008 in. (0.203 mm). Finished cans must be imprinted with the word "DOT-2Q" and the registered logo of the can supplier. One can per 25,000 must be destructively tested, and results must be maintained on file. These cans are about 12–15% heavier than "nonspecification" or DOT-2P cans, and their higher prices reflect the added cost of metal. These heavy duty cans

Table 4. Dimensions and Capacities of Necked-in Three-Piece Cans

Nominal Size (English)	Nominal Size (Metric)	Capacity (mL)
111/113 ×	43/45 ×	
214	73	106
312	95	140
410	117	175
508	140	209
608	165	247
200/202 ×	50/52 ×	
214	73	145
314	98	190
406	111	224
509	141	288
514	149	303
700	178	365
708	191	389
711	195	398
202/205 ×	52/57 ×	
410	117	272
604	159	388
607	164	401
701	179	428
704	184	445
710	194	486
802	206	522
805	211	536
207.5/211 ×	60/65 ×	
410	117	395
413	122	419
604	159	518
612	171	563
710	194	647
713	198	671
211/214 ×	65/67 ×	
315	100	346
413	122	480
714	200	766
804	210	802
1006	263	999

represent 2% of the market. They must carry the DOT 2 Q words along with the registered logo of the manufacturer.

The final grouping is the "DOT special exemption" can. For the express purpose of approving (a) whipped creams, (b) HCFC-22, and (c) HFC-134a, the DOT has issued exemptions allowing certain cans to be shipped with products whose 130°F (54.4°C) pressures exceed 180 psig (12.41 bars). The whipped-cream can is a "DOT Specification 2Q" container, but fitted with a pressure-relief mechanism (PRM) on the top of the top double seam, which effectively prevents the can from bursting at excessive pressures by venting the contents in a controllable fashion. This can may hold whipped cream (only) at pressures of ≤ 210 psig (1.55 MPa) at 130°F (54.4°C). Such aerosols have a number of product advantages over those packed at lower internal pressures. The DOT also considered that these cans are shipped, stored, and used under refrigeration, making the chance of heat-generated deformation de minimus.

HCFC-22 ($CHClF_2$) has a pressure of 301 psig (2.19 MPa) at 130°F (54.4°C). It requires a very heavy can to safely hold it. The Sexton Can Company produces a two-piece can, with a base-centered pressure-relief attribute that can do so. Here there is no double seam. The firm developed various designs that are stamped into the can base, before it is double-seamed to the shell segment. These designs are often in the form of about 335° degrees of a circle, perhaps 10 mm in diamter. The tinplate is both thinned and work-hardened there so that when the base buckles under excessive contents pressure, the stamped area will fracture and lean outward so that the product can safely escape.

No exemptions have been made for aluminum cans because their bottoms are too variable in thickness to permit a relief mechanism to be incorporated.

The United States is virtually alone in requiring minimum plate thicknesses for specification aerosol cans. Some nations, such as Mexico, have no pressure regulations. The European Union members use the 12-, 15- , and 18-bar can. For example, the 18-bar can may be used to contain aerosols having pressure to 12 bars at 50°C and must not burst below 18 bars (261 psig). For many products, this pressure limit is equivalent to 13.9 bars at 54.4°C (202 psig at 130°F), although the can has a lower burst pressure than the DOT Specification 2Q. This permits the 18-bar can to hold such products as HFC-134a, which in the United States would require a DOT exemption. Currently, the United Nations is asking the U.S. DOT to revise their criteria to match those of Europe and Japan, among others. In Europe, the Federation of Aerosol Associations is petitioning the EU to establish a 2-bar extra-strength can, which would be useful for the improvement of formulations pressurized with nitrogen or compressed air.

ALUMINUM CANS

Aluminum cans have been available since at least 1948. Historically, they have almost always been of one-piece (monobloc) construction, and this is the only type currently made in North America—although one firm in Europe still makes a two-piece specialty can by attaching an aluminum or tinplate dome to a suitably flanged aluminum shell section.

United States aluminum can suppliers as of 2007 are CCL Container Company and the Exal Corporation. Some pharmaceutical marketers make their own very small cans—and some are imported.

While the smallest commercial tinplate can is 35 × 97 mm (86 mL), aluminum cans are made in sizes down to about 3 mL. At the other end of the size spectrum, the largest aluminum aerosols are about 66 × 275 mm (890 mL).

The essentials of the aluminum canmaking process involve taking a round slug (billet, or puck) and extruding it into a "cup" of essentially the same diameter, using a 25- to 50-ton ram. The top is trimmed to a fixed length, after which the metal is cleaned and enameled—normally inside and outside. The top is then die-formed into a dome and curl (or bead). The curl engages the aerosol valve—all "one-in" (1-in.) valves and most of the smaller, ferrule-type valves. The very small 13- and 15-mm-diameter cans may use noncurl finishes.

Aluminum cans have no seams, and thus the linings can be applied more effectively than on tinplates. Many formulas, such as the popular mousse types, may be commercially packed in aluminum without corrosion, whereas they almost always severely attack lined tinplate cans. The permeation of water-based solutions through aluminum-can linings is on the order of 0.1–1.0% as fast as in the case of double-lined and striped tinplate structures.

The smooth-wall construction of aluminum aerosol cans permits the insertion of plastic, floating-type pistons, so that certain products can be kept "nonaerated." This is important for the popular gel-type (postfoaming) shaving creams and the recently test-marketed toothpaste option, as well as dozens of other product types. In time, as one- and two-piece tinplate cans continue their development, some of this market may go to such containers.

GLASS AND PLASTIC

Historically, glass and plastic-coated glass aereosols have been restricted for use as containers for colognes, perfumes, and pharmaceutical liquids. Unfortunately, the flammable and bursting hazards, plus cost and a relative lack of aesthetics, have transferred most of their market to plain-glass bottles (nonpressurized) containing pump-action valves. Then, too, some of their pharmaceutical base has moved over to aluminum aerosols. As a result, the glass and plastic-coated glass market is currently very small, and only a few fillers participate.

There has been a lot of interest in the potential of certain plastics as aerosol containers. For most of this time, DOT regulations greatly limited such developments, since they would not permit the shipment of nonmetallic aerosols having capacities greater than 4 fl oz (118.2 mL). Meanwhile, products such as furniture polish, cleaning preparations, and even hair sprays have been successfully marketed in Europe and parts of South America—using biaxially oriented PET plastic. Aside from some minor concerns about distortion at temperatures over $\sim 122^\circ$F (50°C), this clear plastic seems almost ideal. Special bases and shrink-label attributes were needed to hide the often unappealing aerosol formulation, but these were minor concerns. Currently, the DOT has canceled their regulations to (a) permit plastic aerosols to be shipped and (b) reduce hot-water bath testing requirements.

VALVES

An estimated 95% of the U.S. aerosol valves are currently manufactured by three large firms: Precision Valve Corporation (PVC, Yonkers, NY), SeaquistPerfect Dispensing (Division of the Aptar Group) (S/P) (Cary, IL), and Summit Packaging Systems, Inc. (Manchester, NH). There are smaller domestic firms such as the Clayton Corporation (St. Louis, MO) and Newman-Green, Inc. (Addison, IL). A few marketers make their own valves, including some of the drug houses that fill metered-dose inhalant (MDI) aerosols. Two European-based international valve suppliers have now established sales and technical service offices in the U.S., but produce there valves elsewhere. They are Coster Tecnologie Speciali, s.p.a. (Milan, Italy) and the Lindal Packaging Group (Germany). The Emson Research, Inc. firm, now owned by S/P, specializes in the production of the ferrule-type valves, including the meter-spray types. The Majesty Valve Company (China) is said to be setting up a sales office facility in the United States.

The world's largest valve-maker is PVC, with about 24 plants in 18 countries. They produce about 4×109 valves per year, or about 34% of the world's production. Both S/P and Summit are also international.

COMPONENTS

Modern valves consist of six to seven components:

Actuator (sprayhead or foam spout)
Valve stem
Stem gasket
Body (housing or spring cup)
Spring
Mounting cup
Dip tube

These will vary according to the type of valve. Perhaps the simplest valves are the Clayton and ReddiWhip types, which consist of a very large spout (or stem), a large rubber gasket, and a mounting cup. Since these valves have no dip tube, the can must be inverted before pressing the stem sideways to extrude the product.

In the Newman–Green and other "female" valves the actuator and stem are molded on one piece of plastic (see Figure 1). There is a terminal orifice, often provided by a nylon insert, and a stem orifice that consists of slots in the hollow sidewall of the stem section. This design has several advantages. One basic valve can be tested with up to about 100 actuator/stem combinations, which is convenient for formulators trying to get the most desirable delivery rate and spray pattern. Also, if the valve plugs, the actuator/stem can easily be pulled upward and separated from the rest of the valve, so that it can be washed free of such things as paint pigments, starch powders, and possibly any extraneous textiles, cardboard fibers, or other detritus. The valve can then be reassembled.

Stems

Most valves have separate stem components. The stem ranges from about 3.18 to 3.96 mm (0.125" to 0.156") in outside diameter; and it protrudes different distances from the top of the mounting cup pedestal, which surrounds the lower half. Depressing the stem will serve to operate most valves, but a particular type of stem may be pressed sideways to gain the same effect. Such valves are commonly called tilt-action or toggle action. Note that "Toggle Action" is a registered trademark of the Seasquist-Perfect Dispensing firm. These valves have several advantages. The large slanted finger-pad on the actuator provides good spray directionality, even if one operates the

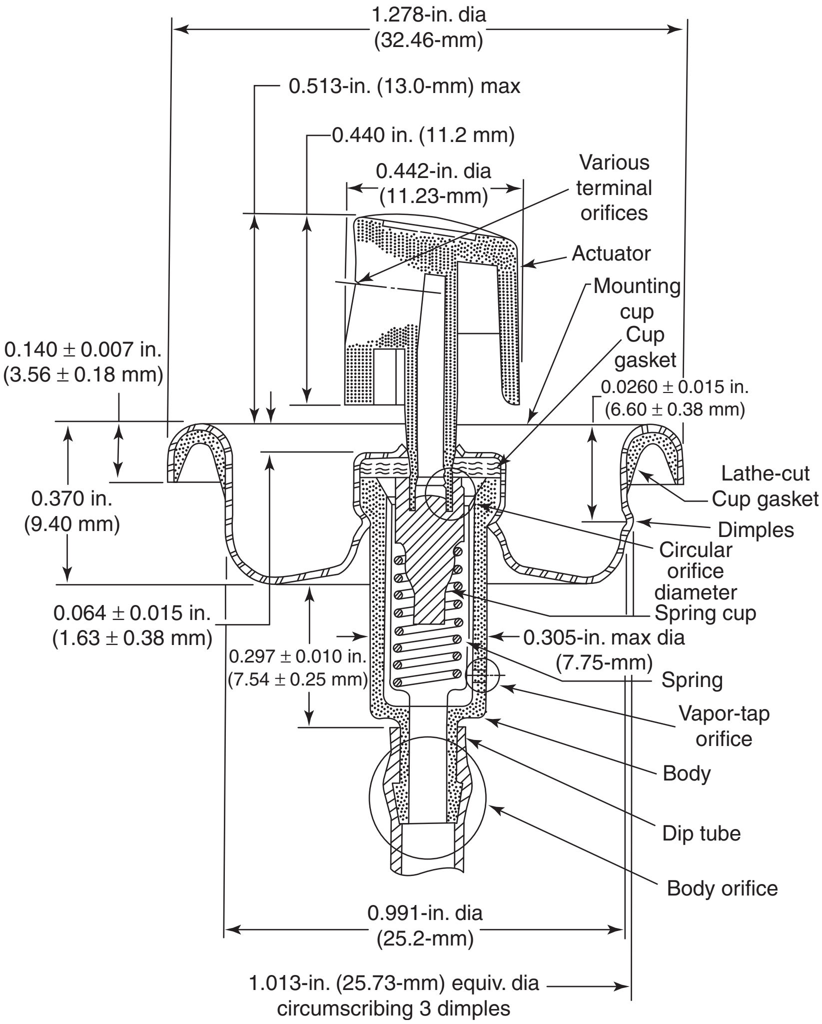

Figure 1. Cross section of female valve.

valve in poor lighting conditions, or in the case of poor eyesight. The button also requires only about 0.6 kg (1.32 lb) of finger force to operate, whereas the vertical sprays may require as much as 3 kg. (6.6 lb). This feature makes the valve popular with beauticians and others who must operate it frequently. The valve is somewhat sensitive to formulations that contain solids or which have solvents able to swell the components unduly. In such cases the vertical valves may be preferred.

The vertical-acting (reciprocating or up-down) "male" aerosol valve is the most popular type. It is relatively simple and trouble-free. The valve can be fitted with a variety of large spray-heads, spray domes, or spouts, each with comfortable finger pads, and these aesthetically pleasing fitments are a major factor in its relative popularity. When the stem is pressed downward sufficiently, the stem orifice, normally above or against the stem gasket, slides to a position below the stem gasket, thus opening a small hole through with the pressurized product can pass up the dip tube, through the valve body, past the stem orifice and into the actuator, from which it then is delivered as either a gas, spray, foam, gel or liquid stream. Most often, it is as a spray. Figure 2 is an exploded view of the two most popular valve designs. Male valves are characterized by having stems that are separate from the actuators. Figures 3 and 4 give a more detailed view of these valves.

Body/Spring

The valve body, or housing, contains a SS-302 spring that acts to close off the valve when the finger pressure is released. This is a major safety feature. It may also carry a tailpiece orifice and often a vapor-tap orifice. The tailpiece orifice is often not an orifice at all, but instead a 1.57- to 2.03-mm (0.062- to 0.080-in.) hole in the end of the dip tube to protrude into the head space, then only gas will be emitted. A number of corrective steps have been taken, over the years, to resolve this problem. The first was to place a directional dot (typically using a black "Magic Marker") on the crown of the mounting cup, to indicate the curvature of the dip tube, and then align the actuator to it. In that way the end of the dip tube would always be in the lowest position when the can is tilted (see Figure 5). Another method was to use a so-called "Jumbo dip tube," where the typically 7.25 mm (0.285 in.) inside diameter dip

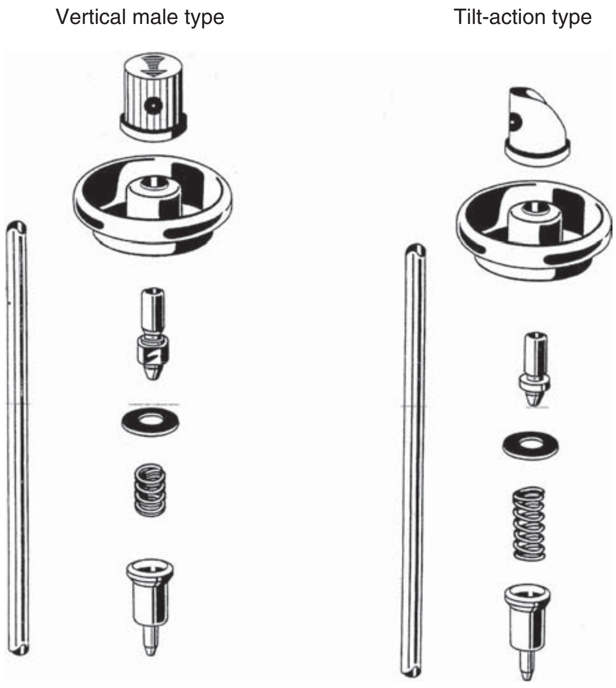

Figure 2. Exploded view of aerosol valve components.

tube could hold up to about 8 g of product. In this case the can could be inverted and operated for several seconds before the dip tube emptied and gas began to come out. This is a preferred option for disinfectant bathroom cleaners.

Another method is the "Spray Any Way" valve, where a 1.00-mm (0.039-in.) stainless steel ball is placed in a tiny runway. When the can is inverted the ball travels to the opposite end of the runway and seals off the orifice served by the dip tube, while opening one at the valve body. Liquid product then flows directly into the valve body, allowing the aerosol to function normally. This unit is an accessory that attaches to (or is made a part of) the valve body. The cost of the valve is increased accordingly.

The final approach is to use a compartmentalized aerosol package. In this case, one can select one of three versions: a piston can, a bag-on-can, and a bag-on-valve. Most generally, the propellant is separated from the product, being gassed into the "exo-space"—under the piston, or around the bags—so the product is continually squeezed and emerges as such when the valve is operated. Products of this type include cheese spreads, caulking compounds, and sunscreens. In some cases a small amount of low-pressure gas (typically 90% isopentane and 10% isobutane) is pre-mixed with a gelled aerosol product. When these products are used, the gel emerges through a foam-type spout. It is generally both clear and tinted blue or green. Upon stirring with the fingertip, the positive yield point of the gel is reduced so that the dispersed propellant can form a nice white puff of foam. This type of product has now captured the bulk of the shave cream market, with sales of over 200 × 106 cans per year in the United States during 2006.

Mounting Caps

The vast majority of aerosol valves are supplied in nominal "one-inch" (25.4-mm) mounting cups. These cups are designed to fit into the nominal "one-inch" hole of aerosol cans. A crimping operation is then used to hermetically seal the valve cup to the can. An elastomeric gasket is required in order to obtain good sealing, since metal-to-metal interfaces will always leak. In the past, the industry used a "Flowed-In" neoprene gasket, but this has almost totally disappeared worldwide, in favor of alternative gaskets. There are now three gasket choices: the 1.0- to 1.15-mm (0.039- to 0.045-in.) thick lathe-cut gasket, of buna, neoprene, or butyl rubber; the 0.356-mm (0.014-in.) thick PE-Sleeve; and the 0.203-mm (0.008-in.)-thick PP-laminate. The last two gaskets must fit between the vertical wall of the valve cup and the can bead, which means that the metal valve cups must be downsized accordingly. If the typical wall diameter of a valve with a PE-Sleeve is to be 25.25 mm (0.994 in.), then the mounting cup itself must be 24.54 mm.(0.966 in.).

Mounting cups are made of different profiles (flat, conical, and cone-conical) and from different metals (tinplate, heavier tinplate, and aluminum), according to specific requirements that relate to product pressure, corrosion aspects, and so on. The usual tinplate-mounting cup is about 0.267 mm (0.0105 in.) thick, while those of the softer aluminum metal are about 0.406 mm (0.0160 in.) thick. The heavy-duty, thicker tinplates are reserved for high-pressure aerosol formulations, including most of those based on U.S.DOT exemptions. Mounting cups with flat bottoms often distort slightly, becoming more conical, during the hot water-bathing of aerosols during production, when pressures usually get into the 8.27- to 12.41-bar (120- to 180-psig) range. This sometimes poses a problem, where a plastic fitment, such as a large spray-head or spout, may have to fit onto both the mounting cup (for attachment) and the stem (for actuation). The conical valve cups do not deform appreciably in this manner and are generally preferred. In fact, some valve-makers no longer offer the flat-bottomed mounting cups.

The hermetic seal between valve cup and can is accomplished by the use of a crimping machine. They are usually rotary devices, where an eight-segment collet descends to a precise depth, after which a mandrel spreads the eight tines to a precise circumscribing diameter. This action compresses the gasketing material and creates the seal. For the popular combination of a tinplate aerosol can and a tinplate valve with a PP-laminate, the preferred crimping dimensions are: diameter 27.27 mm (1.074 in.) and depth 4.65 mm (0.183 in.). These will vary slightly, according to the type of can and valve cup. The usual tolerance is only ±0.13 mm (0.005 in.) and the range for a given can should not exceed 0.178 mm (0.007 in.).

The effectiveness of the crimping operation is checked during hot water-bathing, after the can has passed through the gasser and been pressurized. If bubbles of gas are seen through the hot water, the can is extracted and discarded. Actually, cans leaking gas at rates of less than about 12 g per year produce gas bubbles so infrequently in the hot water bath that they are not detected by the operator.

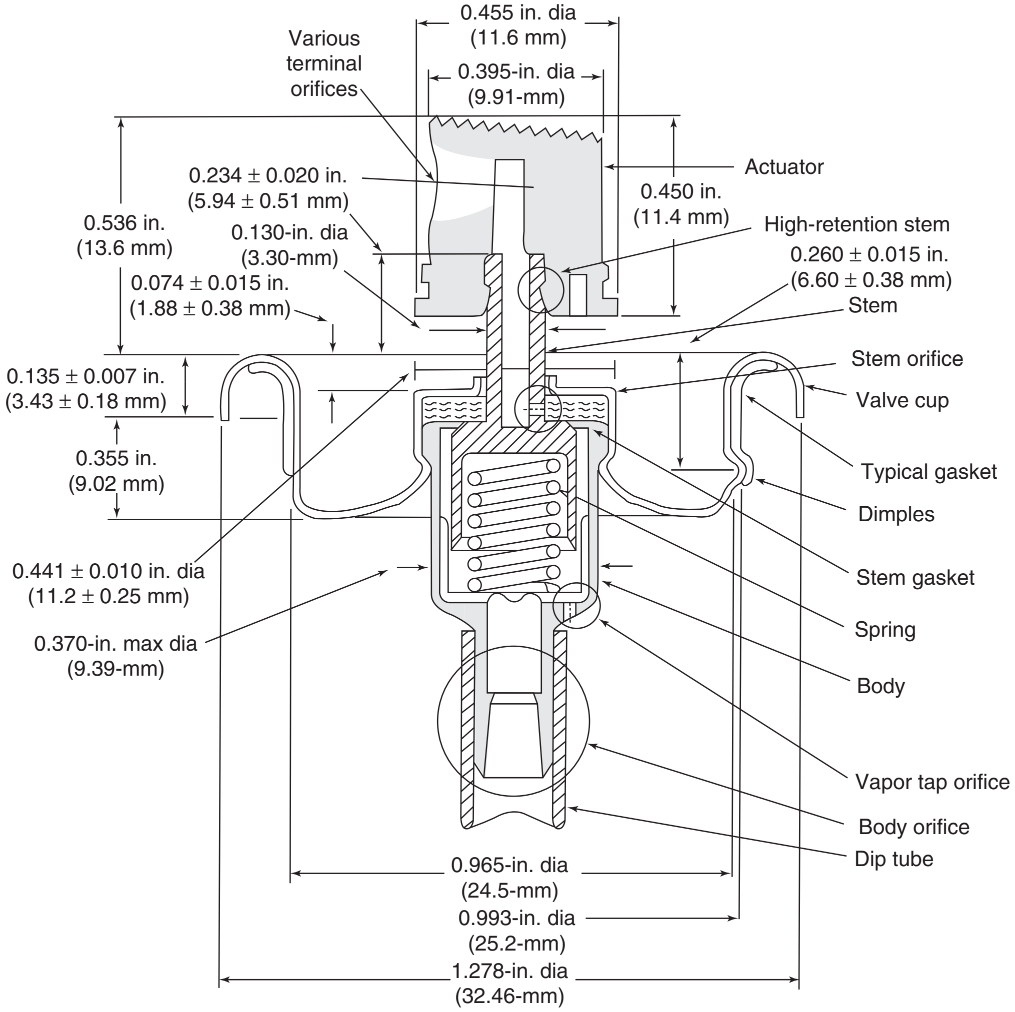

Figure 3. Aerosol valve: "one-inch" cup, vertical action, "male" type.

Dip Tube

The aerosol valve will generally have a dip tube, unless the can is designed to be used in the inverted position, such as whipped creams and the various mousse products. Also, for compartmentalized aerosols, there is no need for a dip tube, since the product is squeezed up against the valve regardless of can position.

Dip tubes come in essentially three sizes: capillaries, regular, and "jumbo." The capillary tubes are inserted into the valve body tailpiece, while the larger tubes are stretched over the body tailpiece. Some tailpieces are designed with encircling barbs, which look like fish hooks in cross section. They hold the polyethylene dip tubes so firmly that they stretch before they can be pulled off. This feature is used most frequently for those high-solvent aerosols (such as paints) that tend to swell dip tubes so that their connection with the valve body is loosened. On the other hand, the capillary dip tubes, which are generally made from either polypropylene (PP) of an alloy, such as PE/PP, tend to swell more than the nylon or delrin valve bodies when in contact with strong solvents. This makes their connection even tighter. Capillary dip tubes are now often used for products such as air fresheners and water-based insecticides, which form large layers of propellant (top) and concentrate (bottom) upon standing for a few minutes. If a regular diameter dip tube were to be used, when the can is shaken just before use, the main product would be redispersed, but that in the dip tube would tend to remain layered. In such cases the first product out of the aerosol would be the propellant, followed by the concentrate and then followed by the dispersion of both. The very small internal volume of the capillary tube minimizes this effect, and the valve generally also has a vapor tap orifice, which serves to help spray the tiny bit of concentrate. Also, the vapor-tap allows the contents in the dip tube to drop back down to the liquid level in the aerosol, after it is used. This further reduces the layering problem, so that it is never noticed by the consumer.

Actuator

The final valve component is the actuator. It is often the most critical. Originally, all actuators were small and had either straight bore, outward flaring, or inward flaring

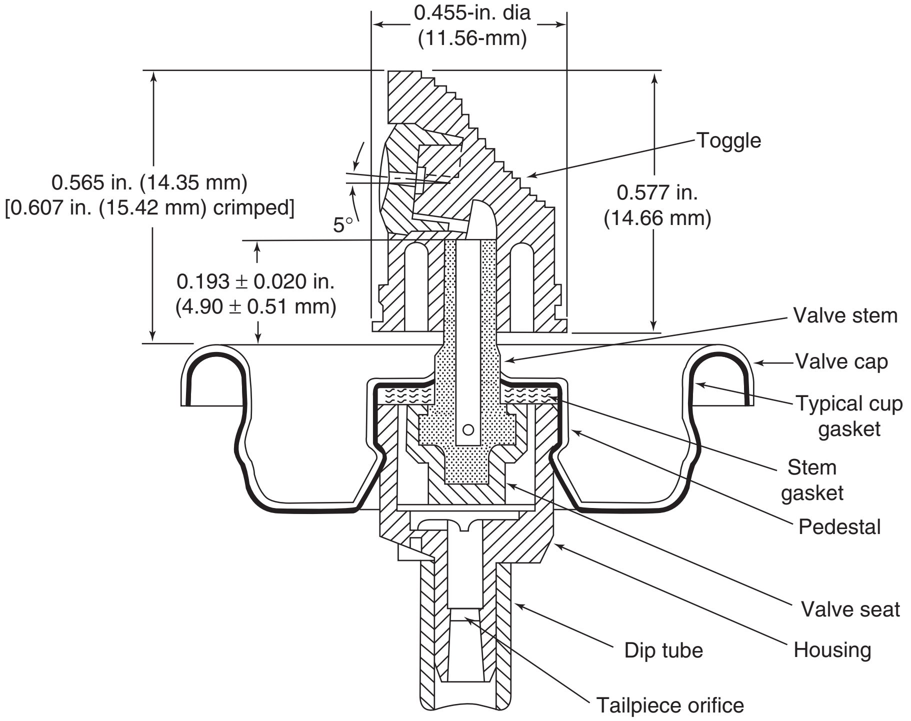

Figure 4. Aerosol valve: "one-inch" cup, toggle-action type.

(reverse taper) orifice designs in various diameters. While these are still available, many are now of the mechanical break-up (MB-U) design. These first came to the market in 1953, on cans of BonAmi Glass Cleaner. They utilize the swirling action caused by directing the liquid product through (typically) four tangential channels that feed a central straight-taper or reverse-taper terminal orifice. Most aerosol emerge from cans at speeds of about 6.1–9.2 m/s. (20–30 ft/s), so it follows that the product revolutions per minute within the terminal orifice is extremely high. The centrifugal force is correspondingly high in the emerging stream, which causes it to break up into a spray. By controlling the length of the terminal orifice (land), its diameter, and other aspects, sprays can be created with varying conical shapes, delivery rates, and other features. Mechanical break-up valves are usually made by adding an insert disc to the main structure of the actuator. The discs are of nylon and fit very snugly into the actuator opening. This is the only way to provide the necessary channels and swirl chamber. For spray uniformity, all the key dimensions must be produced with a high degree of precision.

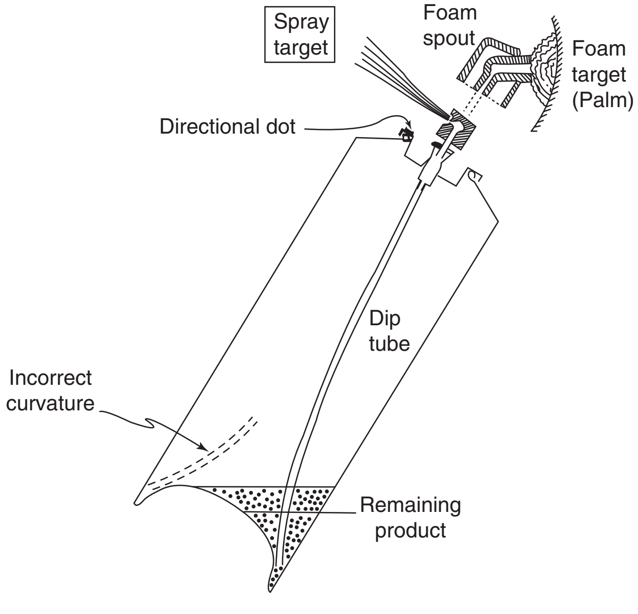

Figure 5. The importance of directional dot on the crown of the valve cup.

Another type of actuator is the foam or gel spout. This usually consists of a single large terminal orifice, but in some cases an attractive grid may be utilized. The usual foam spout is operated by pressing downward, although there are some that must be pressed sideways. They are always larger than the simple spray actuators.

In recent years there has been a major transition from small spray-heads and foam actuators to large fitments that incorporate these components. The fitment may cover the entire valve cup, or even the entire top of the dispenser. Quite often they make the inclusion of a cover, or hood, unnecessary. This is a plus for the consumer, who need no longer remove and reapply the cover each time the product is used. There is another marketing aspect. Consumers are still somewhat reluctant to purchase aerosols, probably harking back to the "CFC/ozone" issue of the mid-1970s, and all the bad press that accompanied it. Recently, 61% of survey responders said they would rather buy a non-aerosol, if it was just as good as the aerosol. Marketers have found that consumers tend to identify aerosols by their characteristic valve cups and perhaps the top contour of three-piece tinplate cans. By the use of large fitments, designed to cover up these attributes, the aerosol no longer appears mildly offensive to some consumers. As a corollary, since the press condemned “spray cans,” most consumers think cans that produce foams and gels are not aerosols.

The aerosol valve is a component of almost infinite variability, when one considers all the parts and all the variations of these parts. One valve executive calculated that his company could theoretically produce over 150,000,000 variables, not counting a diversity of dip tube lengths. Fifty years ago, valves were of very low quality and almost twice as costly as they are today. Now, valves are produced with so many online control checks and manual inspections that their quality is unsurpassed by any other aerosol chemical or component. They have an enormous breadth and versatility. For example, their delivery rates can be adjusted from 0.24 to 160.00 g/s. Particle sizes can range from mean diameters of about 2.3 to 125 μm. They certainly do their part in making the aerosol packaging form the basis for finely tuned, reliable products.

BIBLIOGRAPHY

General References

M. A. Johnsen, *The Aerosol Handbook*, 2nd edition, Wayne E. Dorland Co., Mendham, NJ, 1982.

The Aerosol Guide, 8th edition, The Chemical Specialties Manufacturer’s Association, Inc. (CSMA), Washington, DC, 1995; a 10th edition as a CD will be published in 2009.

W. Tauscher, *Aerosol Technology (Handbook of Aerosol-Packaging)*, Melcher Verlag GmbH., Heidelberg/Munich, Germany, 1996 (English edition).

J. J. Sciarra and L. Stoller, *The Science and Technology of Aerosol Packaging*, John Wiley & Sons, New York, 1974.

PRINTING: GRAVURE AND FLEXOGRAPHIC

Arthur J. Taggi
DuPont Printing and
Publishing, Wilmington,
Delaware
Peter A. Walker
Consultant
DuPont Printing and
Publishing, Wilmington,
Delaware

The four main printing processes are as follows: (*1*) planography or lithography, (*2*) intaglio or gravure, (*3*) porous or screen, and (*4*) relief (flexography or letterpress). In general, the process of printing involves generating two physically different areas, the printing or image area and the nonprinting, or nonimage, area. In relief printing, whether flexographic or letterpress, the image or printing area is raised above the nonprinting area. Ink is applied to the raised surface, which is brought into direct contact with the substrate on which the print is to appear. The flexographic relief printing process is used to print on a variety of paper and plastic packaging materials as well as for some magazines and newspapers, labels, and business forms. Water-based or solvent inks are used.

The most typical method of intaglio printing is the gravure process, which uses a nonprinting area that is at a common surface level while the printing area is recessed, which consists of wells etched or engraved, usually to different depths. Solvent inks are transferred to the printing surface, and a metal doctor blade is used to remove excess ink from the nonprinting surface. Ink is transferred directly to the substrate. Gravure printing is used to print long-run magazines, cartons, bags, labels and gift wraps, as well as plastic laminates, floor coverings, and even textiles. Other types of intaglio printing, such as steel plate or copper-plate printing, use metal plates that are hand- or machine-engraved or chemically etched to produce the lines and characters of the printed piece.

Direct printing refers to the transfer of the image directly from the image carrier to the paper. Most letterpress and gravure printing are done by this method. In indirect or offset printing, the image is transferred from the image carrier to an intermediate rubber-covered blanket cylinder, from which it is transferred to the paper. Letterpress and gravure can also be printed by the offset method.

Images are defined for these printing processes in a number of different ways. The images are produced on a support by chemical, mechanical, or increasingly by electronic imaging means. As of this writing (c.a., 1996), the greatest number of plates and images are made by photomechanical methods. These systems are characterized by photographic images and light-sensitive coatings that, by using chemical etching or other treatments, lead to the formation of a printing surface. Increasingly, however, this printing surface is produced directly by electronic imaging without the traditional photographic intermediates.

Although four types of commonly used printing exist, gravure and flexographic printing are widely used in packaging printing. These methods are considered in more detail in the remainder of this article.

GRAVURE

The gravure printing process, sometimes called *rotogravure*, uses a recessed-image plate cylinder to transfer the image to the substrate. The plate cylinder can be either chemically etched or mechanically engraved to generate the image cells. The volume of these cells determines the darkness or lightness of the image. If an area is darker, then the cells are larger; if the area is lighter, then the cells are smaller.

The gravure market can be considered to comprise three approximately equal segments that are as follows: publications, packaging, and specialty printing. In publications, gravure retains a significant proportion of the long-run magazine market. In packaging printing, in which paperboard and repeat-run cartons are encountered, gravure is the ideal process. The cylinder lasts virtually forever, and color consistency is high. The final third of the gravure market is specialty printing of such items as wallpaper, gift wrap, and floor coverings.

The fundamental strengths of gravure are that the process provides consistent color throughout long print runs, and, because of its ability to apply heavy ink coverage, can be used to print high-quality work or to print on a lower grade of paper than offset lithography while maintaining acceptable print quality.

In contrast, the primary process disadvantages of gravure are long lead time, high cost of manufacture for gravure cylinders, generally long press make-ready times, and environmental hazards associated with the use of solvent-based inks. These disadvantages need to be eliminated if the technique is to remain competitive.

The gravure printing process is based around an inking system that is extremely simple, which provides a high degree of consistency, particularly with regard to color printing. This consistency is difficult to match using other printing techniques. The system, shown in Figure 1, uses a liquid ink that has traditionally been solvent-based, although environmental pressures have also resulted in the development of aqueous-based inks. The environmental concerns associated with the use of toxic and flammable solvent inks are being addressed by ink manufacturers, who are working on the development of water-based products.

The gravure cylinder sits in the ink fountain and is squeegeed off with a doctor blade as it rotates. The impression cylinder is covered with a resilient rubber composition, which presses the paper into contact with the ink in the tiny cells of the printing surface. The image is thus transferred directly from the gravure cylinder to the substrate. Frequently, an electrostatic assist is used to help the ink transfer from the gravure cylinder to the substrate (1).

Gravure inks are composed of pigment, resin binder, and—most frequently—a volatile solvent. The ink is quite fluid and dries entirely by evaporation. In multicolor printing, where two or more gravure units operate in tandem, each color dries before the next is printed. This process is seen as a particular advantage for gravure over, for example, offset, where the placing of wet ink on wet ink can lead to inferior print quality. The wet ink on dry and the simple ink train, together with a long-run-length capability, have led to the belief that gravure sets the standard for high-quality printing.

Traditionally, a gravure cylinder was prepared chemically by using a chemical-etch process. Since the early 1970s, electromechanical engraving, in which a diamond stylus cuts the cells into cylinders, has become the preferred approach (2). Newer approaches include laser- and electron-beam engraving.

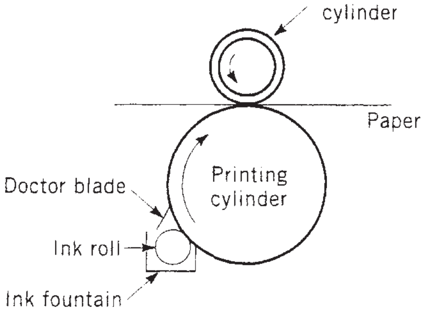

Figure 1. Gravure printing system.

In gravure, all elements within the image are screened. This screening is in contrast to flexographic and lithographic plates, which can contain true solids as well as halftones.

In the chemical process for preparing gravure cylinders, a light-sensitive film, typically gelatin that contains dichromate salts and carbon black, is exposed first through a gravure screen to establish the cell pattern, then through a continuous-tone photographic negative, which hardens the carbon tissue in the light exposed areas in proportion to the amount of light that passed through the negative. The exposed tissue is attached to a fresh copper-plated surface of a gravure cylinder. The unexposed gelatin is washed out, and the cylinder placed in a chemical etching bath that dissolves away the copper layer in proportion to the thickness of the remaining hardened gelatin layer, thus creating the ink-carrying cells. Since the cell pattern is established using a screen pattern, all cells are the same area, but vary in depth. The surface of the etched cylinder is then chrome-plated to impart wear resistance. Gravure cylinders can be recycled many times by removing the copper layer and replating.

In the case of electromechanically engraved cylinders, an electronic scanner reads the density of the photographic negative pixel by pixel, and translates the density into an electromechanical impulse that drives a diamond stylus into the soft copper layer of a cylinder. The completed cylinder is then chrome-plated and is ready for use. Because of the shape of the diamond stylus, the cells produced vary both in depth and area depending on how far into the copper surface the stylus is driven (3).

Electromechanical engraving avoids all the complexity, hazards, and toxic wastes involved with using chemical etching techniques, at the cost of increased capital investment in the engraving equipment. Electromechanical engraving is a slow process, but this is offset by the ability to use digital data, which better fits a modern electronic prepress workflow. Newer systems drive the engraving stylus (or multiple styli for improved efficiency) directly with digital data from an electronic prepress system, or engrave a cylinder using a high-power laser (4).

FLEXOGRAPHY

Flexography is a variation of letterpress printing used mainly for packaging applications. It is characterized by the use of an elastomeric printing plate, fast-drying inks, and an inkmetering (anilox) roll system. The principal advantages of flexography are reflected in the markets in which it is most often used. Flexo's ability to print on a wide range of substrates, which include plastic films, foils, coated and uncoated paper, paperboard, and corrugated board, make it ideal for many packaging uses as well as for printing continuous patterns, such as wallpaper and gift wrap.

Other advantages include low cost and short cycle time, the ability to change cylinder diameters to reduce stock waste, precise ink transfer with minimum on-press adjustments, and the ability to print one layer and laminate another layer over it in a continuous process.

Limitations of flexography include higher highlight-dot gain (spreading of halftone dots in low-density areas) and lower solid density as compared to gravure and offset lithography. The increased dot gain results from a combination of printing-plate deformation and ink spread on press. Another limitation is the inability to print uniform solids and halftones using the same plate without substantial make-ready. The increased pressure required for uniform solids increases dot gain in highlights.

A typical flexo print station is shown in Figure 2. The three basic types of flexographic presses are shown in Figure 3. Dryers generally separate individual print stations. In the stack press (Figure 3[a]), individual print stations are in sequence one on top of the other. This press is used primarily for paper and laminated films. Advantages include accessibility to print stations and the ability to reverse the web, thus allowing printing on both sides in one pass. In the central impression press (Figure 3[b]), the print stations are distributed around a large central impression cylinder, which is precisely geared to each print station and, thus, improves the registration. This press is used mainly to print high-quality, wide-web films. The in-line press (Figure 3[c]) is used mainly for printing corrugated and folding carton as well as for narrow-web tag and label.

The heart of the flexographic printing system is the anilox roll, a steel cylinder optionally coated with ceramic and engraved with a pattern of pits or cells. The function of the anilox roll is to meter a uniform film of ink from the ink fountain to the printing plate without the need for continuous adjustment. Many types of anilox rolls exist, distinguished by the mode of engraving, the materials of construction, the pattern of the cells, and the cell geometry. Anilox-roll variables include the screen count and screen angle as well as cell volume. Anilox rolls fall into two main families, the mechanically engraved chrome rolls and laser-engraved ceramic rolls.

Mechanically engraved chrome rolls are steel cylinders engraved by a precision tool. Following engraving, the rolls are plated with copper, which acts as a bonding layer, and chrome, which hardens the surface. Mechanically engraved chrome rolls have been the mainstay of the industry for many years. However, on the introduction of the reverse-angle doctor blade, which better controls ink metering, and the subsequent wear problems, the industry has been steadily shifting to laser-engraved ceramic rolls.

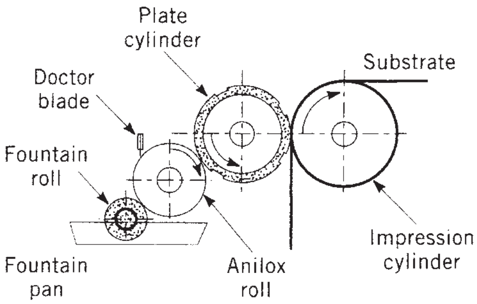

Figure 2. Flexographic printing station, where the fountain pan supplies ink to the rubber fountain roll, which, in turn, supplies ink to the anilox roll. The optional doctor blade removes excess ink from the surface of the anilox roll so that it transfers a uniform layer of ink to the printing plate. The printing plate then transfers this layer of ink to the substrate, which is supported by the impression roll.

Ceramic rolls are steel cylinders that have been coated with a ceramic, usually chromium oxide, layer and then engraved with the beam from a high-energy laser. By controlling the energy and timing of the laser pulse, the depth and diameter of the anilox cell can be tightly controlled. Unlike mechanically engraved rollers, the volume of laser-engraved rolls is independent of screen count, which allows a variety of rollers with a wider range of volumes and screen counts. The ceramic coating reduces doctor-blade wear by an order of magnitude, thus prolonging the life of the roll.

Flexography typically employs low-viscosity fast-drying inks. These inks are dispersions having 25–35% solids content, which consist mainly of nearly equal parts of a pigment or pigments dispersed in polymer resins. These resins form the ink film and attach the pigment to the substrate. Inks may also contain additives such as slip agents, surfactants, plasticizers, and antifoams. The solvent portion is usually a blend of alcohols and acetate esters. Drying rate can be varied by changing the ratio of acetate to alcohol in the solvent.

For aqueous inks, the resins are water- or alkali-soluble or dispersible, and the solvent is mostly water containing sufficient alcohol (as much as 25%) to help solubilize the resin. To keep the alkali-soluble resin in solution, pH must be maintained at the correct level. Advances include the development of uv inks. These are high viscosity inks that require no drying but are photocurable by uv radiation. In these formulations, the solvent is replaced by monomers and photoinitiators that can be crosslinked by exposure to uv radiation. The advantage of this system is the complete elimination of volatile organic compounds (VOCs) as components of the system and better halftone print quality. Aqueous and uv inks are becoming more popular as environmental pressure to reduce VOC increases.

Three primary types of flexographic printing plates are used and are as follows: molded rubber, solid-sheet photopolymer, and liquid photopolymer.

Initially, flexographic printing plates were made of handcut or molded rubber. The basic steps of rubber platemaking include preparing an engraving by exposing a photoresist-coated metal plate to uv light through a photographic negative, which washes away the unexposed resist with solvent, and acid-etching the unprotected metal surface, molding a phenolic matrix board using the metal engraving, and finally molding the rubber plate using the matrix mold.

Molded-rubber plates transfer ink well and, when large numbers of identical designs are needed, are inexpensive to make. However, environmental concerns over the use of acidetching solutions to prepare the metal engraving, poor thickness uniformity, and poor dimensional stability of the molded plates are disadvantages. Photopolymer plates, both solid and liquid, have replaced most engravings.

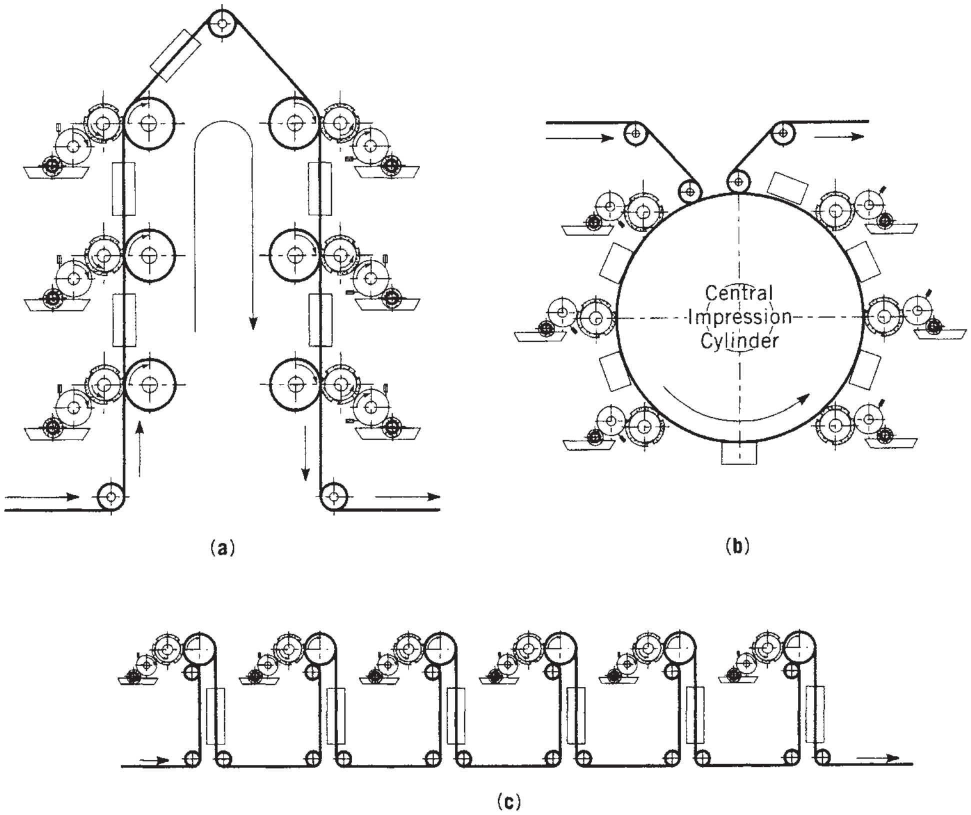

Figure 3. Schematics of flexographic presses, in which the arrow designates the direction of the web flow and θ represents an interstation dryer: (**a**) stack press; (**b**) central impression press; (**c**) in-line press.

Solid photopolymer plates consist of an elastomeric, photosensitive layer bonded to a polyester support. The plate formulation usually contains an elastomeric binder that provides the required properties of flexibility and resilience. The plates typically contain acrylic or methacrylic monomers, sensitizers, and photoinitiators, which, in the presence of sufficient ultraviolet (uv) energy, polymerize to reduce the solubility of the material. Photopolymer plates are made by exposure to uv through the back of the plate to consume stabilizers and define relief height, front uv exposure through a photographic negative (which is usually halftone-screened) to form the image, removal of unexposed areas with a solvent to form the relief image, drying to remove solvent, overall exposure to eliminate surface tack, and postexposure to more crosslink and toughen the plate (5). Advantages of solid-sheet photopolymer plates over rubber include improved dimensional stability derived from the polyester support, longer print run length, improved print quality that includes more predictable rendition of four-color process images, and better thickness uniformity.

Newer technology involves water-processable photopolymer plates. Many platemakers and printers are eager to switch to water processing in order to eliminate volatile organic solvents. The chemistry and process of use are similar to that of the solvent-processable plate, except the plate is formulated with water soluble materials.

The liquid photopolymer plate system is used successfully in corrugated and newspaper markets. The platemaking process is similar to the solid-sheet photopolymer plate except that before exposure to uv, the liquid photopolymer, which consists of liquid rubber oligomers and crosslinkers, is sandwiched between two layers of transparent plastic film to define a nominal and uniform thickness during exposure. Special equipment is used to meter the liquid plate material onto the bottom sheet while covering the top surface with the other plastic sheet. The platemaking process is similar to that of the solid photopolymer plates (6). Lower cost of materials is the main advantage over solid plates. Disadvantages include inferior thickness uniformity and limited run life.

As printers turn more to electronic prepress methods, direct writing of digital data to printing plates will increase in importance. Relief images can be made by laser-engraving a rubber-coated cylinder. The rubber layer is selectively ablated by a high-energy laser beam, which leaves a relief printing image. This method eliminates the need for a photographic negative and is ideal for printing continuous images. Laser imaging of rubber cannot reproduce the fine screen rulings obtainable with solid plates. Other direct digital imaging systems that use photopolymer plates with integral masks also have been shown (4).

BIBLIOGRAPHY

1. J. M. Adams, D. D. Faux, and L. J. Rieber, *Printing Technology*, 3rd edition, Delmar Publishers, Albany, NY, 1988, pp. 477.

2. M. H. Bruno, ed., *Pocket Pal, a Graphic Arts Production Handbook*, 15th edition, International Paper, Memphis, TN, 1992, pp. 125–126.
3. *Ibid*., pp. 126.
4. A. J. Taggi and P. Walker, “Printing Processes” in J. Kroschwitz, ed., *Kirk-Othmer Encyclopedia of Chemical Technology*, 4th edition, Vol. 20, John Wiley & Sons, New York, 1996.
5. *Cyrel® Photopolymer Flexographic Printing Plates Process-of-Use Manual*, DuPont Printing and Publishing, Wilmington, DE, 1995, pp. 17.
6. G. Mirolli, “Engravings and Printing Plates” in J. W. Cotton, et al. eds., *Flexography, Principles and Practices*, 3rd edition, Flexographic Technical Association, Inc., Ronkonkoma, NY, 1980, pp. 174–179.

General References

J. W. Cotton, et al. eds., *Flexography, Principles and Practices*, 3rd edition, Flexographic Technical Association, Inc., Ronkonkoma, NY, 1980.

PRODUCT QUALITY AND INFORMATION TRACEABILITY

Gilles Doyon
Marco Lagimonière
Research Branch
Agriculture and Agri-Food Canada, Ministry, Saint-Hyacinthe, Québec, Canada
Pierre Veilleux
GS1 Canada, Anjou, Québec, Canada

GENERAL INTRODUCTION

The packaging industry on a worldwide basis was estimated at about $460 billion, with the United States accounting for $127 billion or 28% of the global market (1). The quality characteristics or functions of the packaging and its material were described as follows: for microbial safety, chemical inertness, printing properties and ink support, protection against adulteration, advertising-readability, recyclability, ergonomic, convenience. Also, important is to provide some “intelligence” or interaction with the environment with electronic communications means for traceability as well as advanced logistical applications (2). These functions are critical elements in combination with our ingredients, fresh/raw, processed and further processing of food. The food that we consume or preserve, distribute, and trade at local, national, and international levels must be nutritious and safe and must respect specifications in composition and safety under national and international standards. Packaging is and remains a major constituent in our logistic systems, and some parts or surfaces are in direct contact with ingredients and foods. Moreover, many different clients and customers expect implicit or explicit quality characteristics and then either accept or reject the products or services.

Small- and medium-size enterprises, for market competitiveness, have to face many challenges to be successful. They have to (i) master the acquisition and management of the information, (ii) master knowledge of the demands now and in the future, (iii) master conception capacity, that is, means of projects management, value added analysis, ergonomics, safety and design new products, processes, and packaging; (iv) master production and organization skills, and (v) understand and participate in the integrated food supply chain (i.e., pre- and post-plant efficient), logistics, and traceability of necessary information; also relevant was automatic data collection, where the database had rapid response to recall or security threats.

New business situations arising for top management are often seen as new risks, some threats, or more opportunities. Their assessment and resolution could mean new business in product, services and partnership. Therefore, one needs to identify and prioritize them by type, the frequency of occurrence, as well as the level of monitoring with any actions readiness for now and for the future. No one desires to encounter critical risks and the consequences for nonconformity in quality assurance, poor logistics, and breach in traceability of their entities (i.e., packaging and information). In reality, the risks are the following if we do not master traceability: (a) our personal safety and well-being of our employees; (b) our company’s reputation, products, market (identify preservation, IP), and enterprise competitiveness; (c) our supply chain, production, purchasing power, processing capacity and capability, our total overseas distribution chain; (d) our quality assurance and monitoring systems (i.e., HACCP, GMP), traceability, and communication (database and telecommunication); (e) our liability and financial limits; (f) our national regulatory compliance and policy impact levels; (g) our loss of scientific, technological, innovative, and intellectual properties; (h) our loss of personal and scientific independence, as well as territorial and cross-cultural integrated autonomy; (i) deterioration of the environment, the public health as well as for my animals, plant, fish, poultry, and forest including air, water, and soil; and (j) our country’s loss of “brand recognition” and global perception of high quality and safety of foods.

Today’s quality assurance (QA) and packaging departments are involved jointly in research, development, and adaptation (RDA), and most of them are involved in HACCP and setting up traceability tools, database, detailing procedures, and so on, for client requests, for Regional, Federal Inspection, and Certification Agency, or for proof documents for exports.

TRACEABILITY TERMS, DEFINITIONS, CONCEPTS, PERSPECTIVES INCLUDING WORKING PRINCIPLES/ GUIDELINES AND INTERNATIONAL STANDARDS

To facilitate understanding of this chapter and the literature information, we present a list of abbreviations, definitions, and terminology most encountered or standardized.

Activity	A specific pursuit in which a person partakes. Also, a function to be performed. A piece of work that one must do (task). An organizational unit for performing a specific function.
ADC/AIDC/AIS	Automatic Data Capture/Automatic Identification and Data Capture /Automatic Identification System.
BC	Bar code/Bar coding. A bar code symbol is a pattern of bars (black or otherwise) and spaces (white or otherwise) following specific standards that, when read by a scanner, interpret the pattern in characters and numbers and that, when called up in a computer, provide various information, depending on the application, the industry and the type of code. Today, we have linear or one-dimensional codes, two-dimensional (2D) codes like PDF-417, Reduce Space Symbology (RSS or called DataBar), and three-dimensional (3D symbology) or bumpy BC exit.
EAN	European Article Number; an 8- or 13-digit code used by companies outside North America.
EAN International	Based in Brussels; a member organisation that jointly manages EAN. UCC system with UCC.
EDI	Electronic Data Interchange.
EDP	Electronic Data Processing.
ERP/MRP	Enterprise replenishment panning/ Material resource planning.
EPC	Electronic Product Code, which identifies the manufacturer, product category and individual item.
EPC Global	The joint venture of the EAN International with the Uniform Product Council, representing 100+ member organizations worldwide. It is based in Brussels and a member organization that jointly manages EAN. UCC system with UCC.
eXML	Extensible Mark-up Language.
GAP/GPP/GMP/ GLP	Good Agriculture Practice/Good Production Practice/Good Manufacturing Practice/Good Laboratory Practice.
GS1	Global Standard 1, a worldwide organisation.
GLN/GTIN	Global Location Number/Global Trade Item Number.
GPS/GIS	Global Positioning System (satellites or land cellular towers)/ Geographical or Geo-referenced Information System.
HACCP	Hazard Analysis Critical Control Points. Now under a new standard: ISO-22000 (2005).
ISO-8402	Quality Management and Quality Assurance: Vocabulary (1994). Is generally recognized and of current use. Some definitions are as follows:
1. Entity	An item that can be individually described and considered — that is, an activity, a process, processes (business like or how we do activity…), a product, an organization, a system, a person, or any combination thereof.
2. Organization	A company, a corporation, a firm or institution that could be public or private.
3. Procedure	A specified way to perform an activity. In many cases, procedures are documented (i.e., quality system procedure). It contains the purpose and the scope of an activity; what shall be done and by whom; and when, where, and how.
4. Process	A set of interrelated resources and activities that transform inputs into outputs. Here, resources may include personnel, finance, facilities, equipment, techniques, and methods.
5. Product	A result of activities or process, includes service, hardware, processed material, and software, or a combination thereof. Also, can be an intangible form as knowledge or concepts.
6. Quality (Q)	Totality of characteristics has an entity that bears on its ability to satisfy stated or implied needs.
7. Quality assurance (QA)	All the planned and systematic activities implemented within.
8. Quality control (QC)	Operational techniques and activities that are used to fulfill requirements for quality (to achieve economical effectiveness).
9. Quality management (QM)	All activities of the overall management function that determine the quality policy, objectives, and responsibilities, as well as implement them by

	means as quality planning, quality control, quality assurance, and quality improvement within the quality system.
10. Quality system (QS)	Organizational structure, procedures, processes, and resources needed to implant quality management. It is there to satisfy the intended managerial needs or costumers or regulatory agency, in most cases.
11. Record	A document that furnishes objective evidence of activities performed or results achieved. Could be handwritten, paper format, or electronic medium.
12. Traceability	The ability to trace the history, application or location of an entity by means of recorded identifications. In a product, it may relate to the origin of material and parts, the product processing history, and the distribution and location of the product after delivery (in combination with ISO-9001(2000) and ISO-22005).
13. Lot	The ensemble of units of the same reference that is decided to produce, manufacture, or package consecutively, under identical conditions. Or, the material we just bought, which, we can reference, with our specifications and purchasing order. Other definitions exist.
Logistic	The ensemble of tasks and activities that concur or converge to bring order to physical flows within an enterprise—that is, raw materials, various components, fabrication, operational research. It includes the purchase, stock handling, storage, client recalls, sales, administrative tasks, and quality management as well as information fluxes.
Pervasive technology/ Ubiquitous computing	Pervasive is what is going through, diffuse throughout every part of, and the word Ubiquitous means existing or being everywhere, constantly encountered or widespread. Pervasive computing is the trend toward increasing ubiquitous computing devices in the environment brought about by convergence of advance electronic, portable devices, wireless technology, and the internet interactions. Pervasive or ubiquitous computing within the context of Adaptive Business Network (ABN) is more than the ability to access information virtually anywhere and at any time. It provides a business with the ability to sense and respond to changing market more quickly.
PLU	Price look-up. Referring to the International Federation for Produce coding or IFPC, for fresh fruits and vegetables. A very small sticker on the produce or tag unit.
RFID	Radio-Frequency Identification or/and Radio-Frequency Identification and Detection
Risk (s)	The probability of unpleasant event (s) happening.
SSCC	Serial Shipping Container Code.
System & Process(es)	A system is the summation of all processes capable of accepting multiple situations without variations. Must be within limits to be under control. Process(es) mean all methods, various means also, with required competences, and technologies transforming inputs into outputs with a value added: including material as well as information. If, integrated, means internally and with partners externally within the food chain of interest.
Traceability: Ascending/ Upstream	Ability to find all steps for a given lot of finish product, up to retail clients per se, the complete history up and down to the origin of all raw materials including packaging/ingredients. Many times call or refer to *Trace* or *Tracing Back*: If, I am the processor, Level "0".
Traceability: Descending/ Downstream	Ability to retrieve all steps for a given lot of finish product; the complete industrial utilization and its global distribution from its fabrication. Many times call or refer to *Track* or *Tracking*: If, I am the processor, Level "0".
Traceability: Proximity/ Internal	Ability to use mass balance and time stamp on continuous or controlled production batches. With my MRP and ERP (material resource/enterprise resource replenishment planning) we measure the state of optimization or

	not. One can use statistical probability, on that machine and that lot produced to provide information on quality, rework, incoming recall lot, etc. Rapid information on no mixtures of lots appended and no breakage in trace/links (product and pertinent information). Requires an operational database (DB).
Total Traceability	Combines the proximity, minimum one step backward and step forward, plus ascending and descending complete elements. So, one can determine its limits of traceability in the Food Chain. Find a package with its ID and the right information.
TRU	Traceable Resource Unit for batch and batch process, decided by system designer.
UCC	Uniform Code Council. It is based in the United States of America. Uniform Code Council jointly manages EAN.UCC system with EAN.

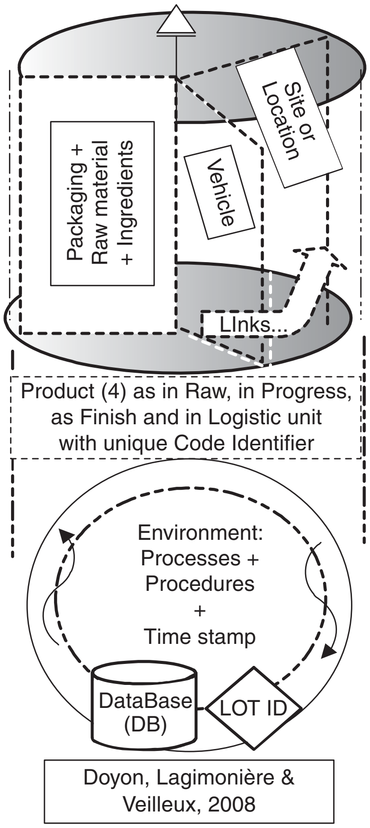

Figure 1. Multiple basic traceability components (16).

Looking at Figure 1, one can see the multiple, minimum, required components or elements (16) to construct an in-house traceability system as complement to any QA and HACCP systems. Sharing and retrieval of pertinent information "a step backward" and "a step forward" were a minimum.

Schaeffer and Caugant (3) presented in a practical guide the definitions, the applications, and the limits of traceability. The main interests were the communications, the commercial impact, and the usefulness, as a multifunction tool. Also, the guide is well-detailed with schematics, a glossary, and questions. A step-by-step methodology to build an internal and total system for the producers or the enterprises was presented. Examples were included.

AFNOR (4) was a soft-cover document that guides you through agri-food sector specific clusters or file sector. You find Good Manufacturing Practices (GMP) for the vegetable quality-model for reciprocal commitment between producers and organized production. It included identification and traceability; and the case for fresh potato production GMP and reception/delivery acceptance GMP was described to the reader. Finally, bar-coding operation and specifications/symbology RFID principles and operation were discussed.

Viruega (5) wrote a challenging book composed of three main segments: (i) evolution of traceability from 1960 to today; (ii) tools and methods, including an exhaustive terminology section; and (iii) "Market for Traceability," hybrid competence, and new perspectives. A new domain by itself for the 21st century was born!

Datamax (6) introduced, full traceability for the European fruit and vegetable supply chain. It was based on the well-structured and recognized European Article Numbering (EAN) family for products labeling to all points: grower/packer, shipper/logistics, and retailer levels. Food safety was defined as global concerns. The main thrust was toward GMO contamination, food-borne illness, and bio-terrorism threats. Minimum information available was specified for retail, shippers/logistics, and farmer/producer point. Schiefer (7), reviewed traceability and certification on quality assurance systems and major initiatives on policy agricultural groups and industries. The infrastructure was based on a large number of small production enterprises (farmers). It was a good tool to gain or ensure trust and certification. The *EAN International Fresh Produce Traceability Guidelines: 2001* (8) was presented and aimed at proposing a common approach to tracking and tracing produce by means of EAN.UCC internationally accepted numbering and bar coding. They defined the minimum requirements, and they accurately and timely identified products, origin, locations, with efficient recall. It was recommended to use common identification and communication standards. Pilot projects were completed in Belgium, Namibia, New Zealand, South Africa, and Spain. There was also a Bahamas supply chain traceability guideline. Additional information, the direct web access site, can be available under the correspondent reference number.

CPMA/PMA (9) was referred as a guide (edited in March 2005) to implementation, between PMA (US) and CPMA (Canada) Associations. It included an executive summary, data, and elements for traceability with two functions: mandatory and optional data. Mandatory encompassed two types: (a) master data that seldom change and (b) transactional data. This was in accordance with Can-Trace data standard. Data elements across the supply chain were divided into primary producers, processors, wholesalers, and distributors/retailers, including data to collect, to keep, and to share. Implementation approaches were (i) paper-based and human-readable; (ii) automatic-technology-based (bar codes) and (iii) based on RFID. The 10 best practices were also summarized. Additional information at the direct web access site can be available under the correspondent reference number.

Can-Trace (10) was a collaborative and open initiative committed to the development of traceability standard for food products in Canada. A second version of the Canadian Food Traceability Data Standard would be available by the first half of 2006. GSI Canada was the initiative's secretariat, the mission being to define and develop minimum requirements based on EAN.UCC system. Also, it offers global traceability information and links.

EAN.GENCOD (11) was a guide published in 2001 to act as common reference document for implementing traceable system between partners in a supply chain. It was composed of definitions from ISO-8402 with many explicit flows of information diagrams. It was composed of several chapters: traceability structural factors: essential issues, principles, and options; description of a traceability system; the implementation of it; conclusions; and case studies; also a bibliography, appendices, and a glossary are presented. Additional information at the direct web access site can be available under the correspondent reference number. EAN International (12) discussed a traceability management tools for agriculture, food, and beverage products as well as GS1 2006. The global traceability standard included supporting visibility, quality, and safety in the supply chain. The documentation from GS1 provided (a) global standards for bar coding, (b) global standard for electronic business messaging, (c) environment for global data synchronization, and (d) global standards for RFID-based identification. This was applicable across the supply chain. This new standard can be integrated with previous operational and detailed guidelines. Also, important was the new tools to view and navigate with the GS1 XML 2-02 language. Additional information at the direct web access site can be available under the correspondent reference number.

Furness and Smith (13) described the urgent need to harmonize a wide range of methods for identification and management of food entities. Here the individual stakeholder uses his own methods. It was critical to develop generic framework for all. The framework was explained in detail. The standardized approach was the EAN.UCC standards and guidelines.

Doyon et al. (14) put emphasis on terminology and definitions generally recognized in North America and with ISO-8402. Great discrepancies existed for lot definition and its understanding. Reliability, perception of value from the client, and probability of failure in the future was linked to spread of recall. Components of internal flow in processing and minimum components of trace system were schematized in color images.

Moe (15) explained fundamental features of traceability and adopted also the terms of ISO-8402. He added up four distinct contexts with different implied sense: product data, calibration, information technology (IT), and programming. He included a step, a chain, a product, and case entities with its essential descriptions and subdescriptions. He introduced also the TRU (Traceable Resource Unit) definition. Interesting reflection on chain versus internal traceability with their respective advantages was a good selling tool for both newcomers and professionals.

Food Traceability Report (16) This electronic press letter was first edited by CRC in 2001. Key words on traceability up to 2007 generated 200+ hit documents. Very informative news and events were available. It required a paid fee for access. Additional information at the direct web access site can be available under the correspondent reference number.

Viruéga (17) described 10 good reasons and five recommendations following the new EC Reg 178/2002, Article 18, effective on January 2005 from the European Community.

The International Standard Organization (ISO) is continually upgrading its quality management, food safety, and also traceability in feed and the food chain, including packaging basic requirements for system design.

The four main leitmotifs were (a) the new EU obligation to prove traceability, (b) the best tool for recall purpose, (c) an argumental tool facing regulatory framework and for extended needs such as for sales, and (d) a marketing impact relevant for suppliers' selection.

COMPUTER MODELING: ENTITY RELATION WITH QUALITY, DATABASE OPTIMIZATION, IDENTIFIER INTERACTION, AUTOMATIC COLLECTION, AND INFORMATION INTERCHANGE

Praat et al. (18) mapped fruit quality using supply chain information in Australia and New Zealand presented the basic tools of GMP, discussed product quality attributes using (a) electronic tags, and (b) near-infrared for Brix and dry matter, and discussed geographical information (GIS). Results of combined technologies were promising for orchard fruit mapping, and as well important for traceability proof.

Jansen-Vuller et al. (19) showed their approach to design information systems for traceability of food based on Gozinto Graph modeling of goods flow—that is, from raw materials to end product. Graphical data are translated into reference data model that shall become the foundation for designing information system. The bill of lots provided the necessary information to determine the composition of a material item out of component items. The system can be used to recall items and also to certify product quality. Very important was its capacity to adjust production process to fine optimization. The van Dorp thesis (20) discussed reference-data modeling for tracking and tracing, described its application, and described how to establish functionality within an object system. Three questions on reference models were targeted: (i) What are the expected advantage of using reference models? (ii) Which examples can we obtained? and (iii) On which elements of reference models do we focus? Research challenges and approaches were delimited. Four reference-data models were constructed and carefully elaborated. The cases included slaughter facility, food processor, a leather producer, and a pharmaceutical manufacturer. The models successfully allowed for the registration of historic relations between lots and batches, the registration of operations on lots and batches, the registration of associated operation variables and values, and, finally, the registration of capacity units on which operations were executed. From the industrial models, a reference-data model was constructed with success. Raynaud et al. (21) specifically compared governance of supply chains when a private brand assured quality to chains, and where official certifications assured product's quality for customers. In seven European countries the study was conducted on a set of 42 cases studies in the agri-food sectors: processed meats, cheese, fruit, and vegetables. They concluded that the relation between quality enforcement mechanisms used in transaction with consumers and the governance of the vertical chains were different. Following a transaction cost economics (TCE) framework, they argued that "*different quality enforcement device should be aligned with different governance of the supply chains*." For many transactions, they were able to evaluate dominant governance structure. Finally, we were closer to a hierarchy-like mode of governance in cases where reputation is the main quality factor, whereas market-like governance was more relevant in case of public certification.

Smith (22) described a computer approach "Re: Trace" to address the reception and quality control data for pallets tracking from field/grower to supplier, importer, and packing house to the final destination, the customer. Bar coding was combined with email and radio data terminal (hand-held). A new product and new company was created "Safe track.co.uk". The integrated database collected data for every links in the chain.

Da Silva et al. (23) demonstrated a solution for exchanging large quantities of data between retailers and suppliers in order to guarantee safety and quality of Portuguese market of fruit and vegetables. They proposed a new information system architecture. This, integrated well with ERP and support administrative functions through internet.

TRACEABILITY TOOLS: AUTOMATIC DATA COLLECTION (ADC), AND IDENTIFICATION SYSTEM (AIS), TECHNOLOGIES, SENSORS WITH COMPUTER (PC) AND CONNECTING LANGUAGES FOR UNIFORMITY IN TRANSMISSION

Traditional manual entering of data into computers, or handheld assistant, involved manual keying (MK) the information, collecting them on sheets of papers, and, finally, a drafted version report. It was unfortunate, but the error-prone ratio of characters entered this way was 1:300. If double verification occurred, then, automation of the collection with proper identifier and tag id and/or any other automated systems means (i.e., artificial vision, optical fiber, etc.) was required.

Doyon et al. (24) described the importance and the multiplicity of technologies besides BC and RFID to collect data and identification without manipulations. They were 2D (optical character recognition) symbology, smart card, machine vision, and biometric as the most current. Main logistic identifiers were GLN and GTIN; also, newly Reduce Space Symbology (RSS) was showing potential.

Of great interest was the work of Opara (25); in his paper he discussed the advancement in information technology (IT) and communication technology (CT) for data capture, storage, retrieval, nondestructive testing and geospatial science; he also discussed genetic analyses (DNA), nanotechnology for miniature machines, and, retinal images.

Tracking genes from seed to supermarket—techniques and trends—was reviewed by Auer (26). This was aiming at tracking plant genes as GMO (genetically modified organism) during pre-commercialization research and post-commercialization detection, identification, and quantification. A glossary and a comparison of principal laboratory techniques used were presented. Also a case study for beets was detailed. Science and policy challenged laboratory techniques, and labeling had an impact. Major critical areas were in the creation of standardized and validated methods and protocols.

Also vital were Pervasive Computer Technologies (PCT) with incredible interactions of sensors and portable devices and handheld (HH) to improve life quality and support adaptive structure anywhere (27). Additional information, direct web access site, was available under the correspondent reference number. In that same line of thought, Heinrich and Betts (28) had that vision to transform and adapt process creating interactive business network. Additional information on the direct web access site was available under the correspondent reference number. Giacomini et al. (29), in their paper on traceability by cooperatives, described the use of bar code technology, scanners, and LIMS (laboratory information management system) for quality control of plant residues analysis. Cost analysis was also included in the document.

Recent work by Rieback in Amsterdam Vrije University precluded serious danger for unprotected RFID systems. Information and educational material were provided in the web sites (30). Additional information on the direct web access site was available under the correspondent reference number. Nobel (31) described some potential and limitations in RFID. Revenue for 2006 would exceed $3.2 billion US and $9 billion by 2009. The success would depend on finding popular applications beyond retail distribution.

Boucher-Ferguson (32) mentioned many hurdles that remained to be resolved, such as lack of international standards, lack of return-on-investment (ROI) models, and the need to upgrade infrastructure to support RFID. The average price for tag was 25–30 cents US but would fall at 9 cents a clip.

Terry et al. (33) presented the application of biosensors to fresh produce and the wider food industries. Principles of biosensor technology were detailed and also defined. In general, the objective was to convert a biologically induced recognition event (i.e., enzyme, antibody) into a detectable signal via a transducer and processor. The end result was a display depicting both the presence and the concentration of the target analyte. Electrochemical, calorimetric, optical, acoustic, immunosensors, sensor arrays, and whole immobilized cells (usually bacteria) as recognition element was also described. The field is open for improvement of QC methods on fresh produce. Under tabulated format, we have described the range of analytes detection for produce and other food matrices. Future technology development and global food analysis market were discussed.

Wang et al. (34) provided an overview on recent development of wireless sensor technologies standards for communication. They discussed advantages and obstacles that prevent fast application adoption. They presented future trends and, in particular, high demand for food quality, health benefits, and safety. We are now in a ubiquitous computing age!

Kamoeka et al. (35) provided the setting up of sensing devices in combination with information system (database) to monitor quality at farm level in Japan. The standard language was XML. The produce under study was tomato plant, spinach, and lettuce under nondestructive testing with laser-induced fluorescence (LIF) and soil moisture by near-infrared (NIR). The database system was with Java Applet Typed analytical tools for color, shape, and spectroscopy. The Bio Information Exchange (BIX) system seemed to have potential for traceability of produce, field, and quality.

Golan et al. (36), in their investigation into traceability baseline in the United States, find that private sector firms had a substantial capacity to trace. The private sector had developed a number of mechanisms to correct problems: They used contracting out, third-party safety/quality audits, and industry-maintained standards. Benefits and costs were delimited and varied across industries. The studies covered fresh produce, grain, and oilseeds as well as cattle and beef; selected milestones in U.S. traceability requirements for foods were closing the report. Additional information in the direct web access site was available under the correspondent reference number.

Carantino (37) presented RFID as a promising tool, still limited by the price. Its application areas are industrial, logistical, and distributional. They allowed for reading and writing from very close to long distance. The pioneers are Wal-Mart, Tesco, Metro, and Carrefour in France. RFID has allowed the knowledge of the exact location of products into warehouse. Efficiency improved 12–17%, stolen goods were reduced by 11–18%, and products availability improved 9–14% following Future store and Metro trials. Tag prices are still an important limiting factor, and the dead zone in reading capability in shelves were of concern.

Anonymous (38) described the acceptance of GSI standard to harmonize logistical traceable practices, and equally important was interoperability of electronic data transmission. Therefore, pallets identification was with EAN-128 and notice of expedition, EDI. The codification of logistical unit was with SSCC (Serial Shipping Container Code). All product codes (trade units) were with GTIN (Global trade item number).

Osborne (39) reported that the e.centre, the UK authority for EAN-UCC system, celebrated its 25th anniversary. It was the champion of open standards. The main structures were the bar codes and computer-to-computer messaging. He maintained that the fresh produce supply chain channel had changed and was stabilized. In Europe, the large supermarkets were the biggest customers of fresh produce, with 79% of the whole market in 2001. Among six types of identifiers, the three most relevant were GTIN, GLN, and SSCC. Business electronic language was still EDI and XML. One remaining major concern was fresh produce individual coding and bar coding. Currently, retailers used PLU system. In North America, one potential solution was in small bar code or RSS (reduced surface symbology or databar) application. The cost–benefit analysis (CBA) was performed for 100 U.S. supermarkets: The savings resulting was from reduction in labor, improved inventory, and improved control would reach $2.3 million. Scanning, scale, and software equipment under two years old could also be upgraded around $2500 per store.

Schwägele (40) and Smith et al. (41) both reviewed papers from European and U.S. traceability perspectives, respectively, on feedstuffs and on processed meats for human consumption. Respective regulations, technologies, terms, and definitions were presented, and a comparison between countries regarding identification and trace system compliance locally, nationally, and internationally was reported in a daily newspaper. Governmental agencies were involved to minimize product recalls and make crisis protocols more effective in any event. Overall, traceability was becoming an integral feature of markets for all foods, and the application of biosensors (immunoelectrodes and optical fiber biosensors) was even more present. Computer modeling and risk assessment were being used to predict risks and better controls to protect human health.

Kleist et al. (42) described in detail into RFID basics, data transport layers, EPC and smart labels, industry initiatives, deployment models, case analysis; and proof of concept.

Finkenzeller (43) showed the fundamentals and applications of RFID. Physical and operating principles of systems were detailed. Applications examples with market potential were reviewed. Palmer (44) and Ash et al. (45) were two technical commercial application-driven documents that, educated scientific and nontechnical people to bar coding reading, printing, specification, and application. They included excellent photos, presented symbology explanations, and is taught how to be successful in Bar Coding.

CONCLUSION

A large portion of the references in the first part dealt with food quality assurance, GMP, HACCP, regulations, and food safety, including risk analysis and management. In the second part, software modeling (entity relation for database and tracking) was in development in combination with identification (AIDC) BC and RFID mainly and GPS-GIS; finally, the most common of commercial e-language were EDI and XML. The most favorite medium with personal computer (PC) and personal digital assistant (PDA) was the Web. Information structures proposed by EAN-UCC guidelines are showing the path. Looking at traceability family principles, definitions, and related terminology, the most interesting data where we have concensus are the following: ascending, descending, total, and integrated traceability. International Standard Organization (ISO) is continually upgrading its quality management, food safety, and also traceability in feed and the food chain, including packaging basic requirements for system design. The linkage is clear between ISO-8402 (1994), ISO-9001: (2000), ISO-22000 (2005), and ISO-22005 (2007) (46–48). Besides manual keying and written instruction, AIDC technologies were presented with some practical cases. Very little data or no information were available on advantages and costs related to traceable technology, training, and selection choices. And finally, a new updated 2006 version of the GS1 Global Traceability standard is for everyone. In many cases, packaging is the support for most identifier application on or within the material itself. Finally, packaging unit or entity remains a vital component of traceability in quality assurance for successful long-term trade.

BIBLIOGRAPHY

1. N. Hauffe, Trends and Opportunities in Packaging R&D in the US: Technology Review 213, from TEKES, the Finnish Funding Agency for Technology Innovation, Helsinki. Finland, 55 pp. ISBN 978-952-457-379-5 (online), http://www.tekes.fi/julkaisut/Packaging_US.pdf.
2. K. L. Yam, P.T. Takhistov and J. Miltz, “Intelligent packaging: Concepts and applications,” *J. Food Sci.* **70**(1), R1–R10, (2005).
3. E. Schaeffer and M. Caugant, *Traçabilité—Guide pratique pour l'agriculture & l'industrie alimentaire,* ACTA-ACTIA, Paris CEDEX, France, 1998. 80 pp.
4. AFNOR, *Traçabilité dans les Filières Agricoles et Alimentaires—Recueil Normes & Réglementation Agroalimentaire*, St-Denis de la Plaine, Cedex France, 2002, 355 pp.
5. J-L. Viruéga, *Traçabilité, outils, méthodes et pratiques*, Editions d'Organisation, Paris. France, 2005. 237 pp.
6. Anonymous. Whitepaper. Datamax. *Full Traceability for the European Fruit & Vegetable Supply Chain*, Datamax Headquarters, Florida, 2004, pp. 1–5. (online), http://www.globalspec.com/supplier/techarticles/datamax.
7. G. Schiefer, “Traceability and certification in food quality production—a critical view,” in *New Approach to Food-Safety Economics*, Wageningen UR Frontis Series, Vol. 1, A. G. J. Velthuis, L. J. Unnevehr, H. Hogeveen, R. B. M. Huirne, (eds.), Springer Science+Business Media, Berlin, Germany, 2003, pp. 63-68.
8. EAN. *EAN International Fresh Produce Traceability Guidelines*, 2001, pp. 1–33 (online), www.ean-int.org/agro_food_fruit_vege.html and http://www.can-trace.org/portals/0/docs/EAN_fresh_produce_traceability.pdf http://www.gs1za.org/upload/Banana%20Traceability%20Guidelines.pdf.
9. CPMA/PMA, Fresh Produce Traceability—A Guide to Implementation, March 2005, pp. 1–47. Joint publication between Produce Marketing Association (PMA), Newark. DE.USA and the Canadian Produce Marketing Association (CPMA), Ottawa, Ontario. Canada (online), http://www.cantrace.org/portals/0/docs/FreshProduceTraceabilityImplementationGuide.pdf. The Association is committed to the Canadian Traceability Task Force, best practices, piloting projects and education and is also one of the key collaborator to CAN-TRACE initiative (online), www.cpma.ca/industry/en/trace.asp.
10. About CAN-TRACE. It is a collaborative and open initiative committed to the development of traceability standards for all food products sold in Canada. Defines the minimum requirements base on EAN.UCC system. Who is involved? Global traceability information documents (online), http://www.can-trace.org/HOME/tabid/36/language/en-US/Default.aspx.
11. EAN.GENCOD, *Implementing Traceability in the Food Supply Chain*, 2001, pp. 1–107. A common reference document, including, definitions, description of a system implementation. Also, case study, recall system and glossary (online), http://www.can-trace.org/LEARNMORE/GlobalTraceability/tabid/86/Default.aspx.
12. EAN International, *Traceability Management Tools for Agriculture, Food and Beverage Products*, Brussels, Belgium, 2004, pp. 1–11. An GS1 Traceability The GS1 Traceability solution provides powerful tool kit for implementing traceability in the supply chain based on the GS1 System of standards (online), http://www.ean-int.org/, http://www.ean-int.org/docs/traceability/GS1_tracebility_brochure.pdf, http://www.ean-int.org/productssolutions/traceability/implementation/, http://www.ean-int.org/docs/traceability/GS1_ fresh_ produce_traceability.pdf, http://www.ean-int.org/productssolutions/traceability/technical/, http://www.ean-int. org/docs/traceability/traceability_,FAQ.pdf.
13. T. Furness and I. G. Smith, “Emerging Needs for Developments in Structures, Techniques and Standards for Traceability,” in *The International Review of Food Science and Technology (IUFoST)*, P. B. Ottaway, ed., Sovereign Publishing Limited, London. Winter 2004/2005, pp. 22–23.
14. G. Doyon, A. Clément, M. Lagimonière, P. Côté, L. Veilleux and P. Veilleux, “Quality, Safety and Reliability in Traceability System: A Canadian Approach,” in *The International Review of Food Science and Technology (IUFoST)*. P. B. Ottaway, ed., Sovereign Publishing Limited, London, Winter 2004/2005, pp. 27–32.
15. T. Moe, “Perspectives on Traceability in Food Manufacture. Viewpoint,” *Trends Food Sci. Technol*: **9**, 211–214 (1998).
16. Food Traceability Report (online), http:// www.foodtraceabilityreport.com. Magazine Food Traceability Report: 155 documents on traceability of fresh fruits and vegetables (requires a member paid fee for access). The second search for fresh produce found 55 hits. Search began with the 2001 creation of the CRC Press news line up to today.
17. J. L. Viruega, “10 ‘bonnes’ Raisons pour faire de la Traç abilité,” *Industr. Alimenta. Agric.* (IAA) **122**(5), 26–29 (2005).
18. J-P. Praat, F. Bollen, D. Gillgren, J. Taylor, A. Mowat, N. Amos, “Using Supply Chain Information: Mapping Pipfruit and Kiwifruit Quality” in *ISHS Acta Horticulturae 604: International Conference on Quality in Chains. An Integrated View on Fruit and Vegetable Quality*, 2003, pp. 377–385.
19. M. H. Jansen-Vuller, C. A. van Dorp and A. J. M. Beulens, “Managing Traceability Information in Manufacture,” in *Int. J. Inform. Manage.* 2003: **23(**5), 395–413.
20. C. A. van Dorp, *Thesis*. Reference-data modelling for tracking and tracing. Doctoral thesis. Wageningen University and Research Centre (WUR), The Netherlands, March 30, 2004.

21. E. Raynaud, L. Sauvée and E. Valceschini, “Alignment between Quality Enforcement Devices and Governance Structures in the Agro-Food Vertical Chains,” *J. Manage Governance* **9**, 47–77 (2005).
22. J. Smith, “Traceability Systems Take Closer Control from Seed to Shelf,” *Fresh Produce J. (FPJ)* **19 Jan.**, 13–14 (2001).
23. M. M. da Silva, L. M. da Silva and J. P. Salema, Using information systems to increase food quality and safety in the Portuguese market for fruits and vegetables. In: Dynamics-in-chains-and-networks:-Proceedings-of-the-sixth-International-Conference-on-chain-and-network-management-in-agribusiness-and-the-food-industry, **27–28 May**, 184–191 (2004).
24. G. Doyon, P. Veilleux and A. Clément, “Food Quality and Global Traceability for E-Commerce through Automatic Data Capture Process: New Bar Codes and RFID Technologies,” in *Seafood Quality and Safety. Advances in the New Millenium*, F. Shahidi and B. K. Simpson, (eds.), ScienceTech Publishing Co., St. John’s NFLD, Canada, 2004, pp. 39–59.
25. L. U. Opara, “Traceability in Agriculture and Food Supply Chain: A Review of Basic Concepts, Technological Implications, and Future Prospects,” *Food Agric. Environ.* **1**(1), 101–106 (2003).
26. C. A. Auer, “Tracking Genes from Seed to Supermarket: Techniques and Trends,” (Review), *Trends Plant Sci.* **8**(12), 591–597 (2003).
27. Pervasive computer technology/ubiquitous technology. Definition, applications, and future in any supply chain. The incredible interactions of sensors, computers, and portable devices to improve life quality and business, (online), http://www.computer.org/portal/site/pervasive//, http://en.wikipedia.org/wiki/Ubiquitous_computing, http://searchnetworking.techtarget.com/sDefinition/0,,sid7_gci759337,00.html, http://news.com.com/Supply+chain+reaction/2009-1008_3-996043.html.
28. C. Heinrich and B. Betts, Adapt or Die—Transforming Your Supply Chain into an Adaptive Business Network, John Wiley & Sons, Hoboken, NJ, 2003. 234 pp.
29. C. Giacomini, M. C. Mancini and C. Mora, “Case Study on the Traceability Systems in the Fruit and Vegetable Sector,” in *Meeting the Challenges of Sustainable Livelihoods and Food Security in Diverse Rural Communities 2002, IFSA*, November 17–20, Lake Buena Vista, pp. 1–10 (online), http://conference.ifas.ufl.edu/ifsa/papers/e/a17.doc.
30. M. R. Rieback, “RFID Virus and Worms,” Department of Computer Science. Vrije Universiteit Amsterdam. Also, interesting web resources—31 sections. Finally, RFID-101 info Guide—12 sections, (online), http://.rfidvirus.org/index.html, http://cnd.iit.cnr.it/percom2006/program.html, www.rfidguardian.org and www.rfid-101.com.
31. C. Nobel, “Symbol Considers RFID Options,” in *eWeek*, **23**(7), 35 (2006).
32. R. Boucher-Ferguson, “RFID Losses Reception. High Tag Costs Are Still Putting the Kibosh on Returns on Investment,” *eWeek* **23**(10), 11 (2006).
33. L. A. Terry, S. F. White and L. J. Tigwell, “The Application of Biosensors to Fresh Produce and the Wider Food Industry,” (Reviews), *J. Agric. Food Chem.* **53**(5), 1309–1316 (2005).
34. N. Wang, N. Zhang and M. Wang, “Wireless Sensors in Agriculture and Food Industry—Recent Development and Future Perspective” (Review), *Comput. Electron. Agric.* **50**, 1–14 (2006).
35. T. Kameoka, A. Hashimoto and M. Harada, “Sensing and Information System for Cultivation Traceability in the Farm,” in *AFITA 2002: Asian Agricultural Information Technology and Management Proceedings of the Third Asian Conference for Information Technology in Agriculture*, Beijing, China, 26–28 October 2002, pp. 421–425.
36. E. Golan, B. Krissoff, F. Kuchler, L. Calvin, K. Nelson and G. Price, “Traceability in the U.S. Food Supply: Economic Theory and Industry Studies,” in *Agricultural Economic Report, Economic Research Service Report 830*, U.S. Department of Agriculture, Washington, DC, 2004, p. 48 (online), http://www.ers.usda.gov/publications/aer830/.
37. S. Carantino, “RFID. Un outil prometteur encore limité par son prix,” *Revue Laitiere Francaise* (*RLF*) **648**, 31–32 (2005).
38. Anonymous, “Les Distributeurs Privilégient les Standards GS1,” *Process* **1212**, 6 (2005).
39. A. Osborne, “Cracking the Code,” *Fresh Produce J. (FPJ)* **26 April**, 20–21 (2002).
40. F. Schwägele, “Traceability from a European Perspective,” (Review), *Meat sci.* **71**, 164–173 (2005).
41. G. C. Smith, J. D. Tatum, K. E. Belk, J. A. Scanga, T. Grandin and J. N. Sofos, “Traceability from a US Perspective” (Review), *Meat Sci.* **71**, 174–193 (2005).
42. R. A. Kleist, T. A. Chapman, D. A. Sakai and B. S. Jarvis, “*RFID Labelling—Smart Labeling Concepts & Applications for the Consumer Packaged Goods Supply Chain*,” 1st edition, Printronix, Irvine, CA, 2004, 211 pp.
43. K. Finkenzeller, *RFID Handbook—Radio-Frequency Identification Fundamentals and Applications*, John Wiley & Sons, West Sussex, UK, 1999, 304 pp.
44. R. C. Palmer, *The Bar Code Book—Reading, Printing, Specification, and Application of Bar Code and Other Machine Readable Symbols*, 3rd edition, Helmers Publishing, Dublin, NH, 1995, 386 pp.
45. M. Ash, R. B. Meyers and D. Kilbane, *Beginners Reference Guide to Bar Code Labelling,* T. L. Ashford, ed., Frontline Solutions, Cleveland, OH, 2001, 51 pp.
46. ISO-8402 “Quality Management and Quality Assurance—Vocabulary,” Geneva, Switzerland (online), http://www.iso.org. (1994).
47. ISO-22000 “Food Safety Management System—Requirements for Any Organization in the Food the Food Chain,” Geneva, Switzerland (online), http://www.iso.org. (2005).
48. ISO-22005 “Traceability in the Feed and Food Chain—General Principles and Basic Requirements for System Design and Information,” Geneva, Switzerland. (online), http://www.iso.org. (2007).

PROPELLANTS, AEROSOL

MONTFORT A. JOHNSEN
Montfort A. Johnsen and
Associates, Ltd., Danville,
Illinois

Propellants are an integral part of every aerosol product. They may vary from about 0.5% to 100% of the total composition, and even with specific products there may be rather wide variations in propellant type and percentage. The most basic role of the propellant is to provide pressure inside the dispenser, so that when the valve actuator is pressed, the product emerges. But the propellant fills a number of other rolls as well.

Propellents can be divided into classes according to their generic makeup, pressures, and other attributes. The hydrocarbon class includes propane, *n*-butane, isobutane, and perhaps *n*-pentane and isopentane. When pure, these gas liquids are almost odorless, very low in density, and quite inert chemically except for their extreme flammability. They are the workhorses of the aerosol industry since they are used in 80% of all U.S. aerosols. Isobutane is the most popular due to it adequate but intermediate pressure of 31 psig at 70°F (21.4 bars at 21.1°C). The next group has one member: dimethyl ether (DME). DME has a pressure of 62.3 psi-g at 70°F (4.30 bars at 21.1°C), a low density, and exceptional solvency. The third groups consists of the hydrofluorocarbons: HFC-152a, HFC-134a, and HFC-227ea in order of popularity. HFC-152a (1,1-difluorethane) is popular because it is not a VOC (volatile organic chemical). HFC-134a (1,1,1,2-tetrafluoroethnae) has a global warming potential about 11 times higher than HFC-152a and is highly restricted in its availability. HFC-227ea (1,1,1,2,3,3,3,-heptafluoropropane) is almost unknown in the general aerosol industry. The propellants mentioned above are sometimes called liquid propellants or gas–liquids. The can be shipped by tank car or tank trucks and can be stored in bulk tanks having a capacity of 122,000 L (31,500 gal).

Both carbon dioxide and nitrous oxide are liquid propellants, since their critical points are slightly above room temperature. The solubility of these gases varies greatly with their formulation. The final group of aerosiol propellants is the permanent or noncondensable gas, typified by nitrogen and purified compressed air (CAIR). Since nitrogen is virtually insoluble in water and only very slightly available im organic solvents, it is often considered to act as a gaseous piston, placing aersol concentrates under pressure so they will be emitted when the valve is is operated. Compressed air, which contains 77.52 vol% nitrogen, has very similar properties.

For products in which the propellant is soluble (usually anhydrous types), the propellant can be used to control particle size. Increasing the percentage of propellant, or the use of a higher-pressure propellant, will serve to decrease the mean aerodynamic particle size of the spray. The importance can be illustrated in the case of insecticides. Sprays designed to kill flying insects must produce a preponderance of particles capable of floating about in the air for significant time periods. In the case of particles larger than $\sim 50\,\mu$m, they would fall onto tables and floors so rapidly that the insecticide would lose potency—known as "knockdown" and *cidality* properties. On the other hand, particles that are too small would tend to "airflow" over or under the flying insect. Some insect sprays, more properly identified as bug killers, contain only about 3–20% of propellant in the formula (depending on propellant choice), and these produce coarse sprays designed to coat baseboard areas where many crawling insects travel. The formulas usually contain relatively harsh toxicants that should not be inhaled to any significant degree.

The aerosol valve generally works hand-in-hand with the propellant to produce the desired product presentation. Valves are important in controlling delivery rate. They also have terminal orifices that can determine the width of the spray cone. Some of these orifices come with what is known as a mechanical breakup (MBU) insert, which can take what might be a solid stream of product and cause it to be emitted as a coarse spray. The functionality is rather similar to that of a garden-hose nozzle.

In those cases where sufficient dissolved propellant is available to create a spray, as the liquefied gas bursts into the gaseous state, the use of an MBU sprayhead can serve to make the spray particles somewhat finer and the spray pattern more uniform and elegant. MBU sprays are generally quieter than other types.

Most propellants are relatively insoluble in water, and thus in water-based products, but can be emulsified into them if some surfactant is added. This is the basis of aerosol foams: shaving creams, mousses, foam charcoal starters, and so on. Typically, 4–8% of hydrocarbon propellant is emulsified in the soap solution by gentle shaking before use. If one uses a spray-type actuator instead of a foam spout, foaming sprays can be generated. Hard-surface cleaners, textile spot removers, oven cleaners, and similar products are formulated this way.

About 45–50% of all aerosol valves have vapor-tap orifices: tiny holes pinned or drilled through the body, so that both liquid and gas enter the body chamber when the valve is actuated. The result is a spray with much lower delivery rate, a finer particle size, and a somewhat louder sound. Since much of the emerging propellant is already in the gas phase, the spray is warmer than that of regular sprays. This can be important in the case of underarm deodorants, antiperspirants, body sprays, and medicated foot sprays. The use of vapor-tap valves also allows liquid orifices to be larger. Vapor-taps are always seen on antiperspirants, partly to keep the finely powdered aluminum chlorhydrate astringent from clogging valve orifices. The vapor-tap feature permits the use of large, clog-resistant orifices, but without the stigma of excessive delivery rates.

One important consideration with vapor-tap valves is that sufficient propellant must be used to keep it from running low, due to the continual short-circuiting of the gas phase. For example, depending on the relative size of the liquid-tap and the vapor-tap orifices, a dispenser that starts with 45% propellant could end up with 35% propellant. This might mean a discernably coarser spray and lower delivery rate. A final interesting feature of vapor tap valves is that, if the liquid and vapor orifices are the same diameter, the aerosol will spray just the same way, if it is inverted. In such cases the regular aerosol types would only emit propellant gas.

HISTORY

The earliest aerosol propellants were carbon dioxide, followed by vinyl chloride, isobutane, dimethyl ether, and a few other gases. In 1938, when the chlorofluorocarbons (CFCs) became commercially available, these very low-odor, nonflammable, and relatively inexpensive gases virtually displaced all the others. Most early aerosols used about 85–90% CFCs—from the heavy “bug bombs” of World War II to the consumer aerosols that first appeared about 1948 in the United States. After 1954 very low-cost, low-odor hydrocarbons became available, and propane, *n*-butane, and isobutane began to be used to propel water-based products, such as window cleaners.

The very light-density hydrocarbon liquefied gases simply sat on top of the product as a discrete liquid layer, conferring a rather constant pressure. Under such conditions, the product itself flowed up the dip tube when the dispenser was actuated, turning into the desired coarse spray as it passed through the MBU valve orifice (see Figure 1). This type of operation had been impossible with the CFCs, since they are about 1.4 times as dense as water and would have formed a bottom layer of almost pure propellant. Actuating the valve would have swept the propellant up the diptube—and even if the diptube had been shortened, to extend only to the bottom of the product layer, tilting the dispenser during use would still have caused propellant discharge.

The window cleaner, oven cleaner, basin, tub, and tile cleaner, and similar products typically ran about 4–6% isobutane propellant (7.3–10.9 vol%). The top layer would diminish in size when the headspace was enlarged during sprayout. But a certain amount of propellant was also added as a contingency against the very real probability of occasional consumer misuse, such as trying to spray the can when it was severely tilted or even upside down.

The aerosol industry first learned about the “ozone/CFC” issue around 1974, at a time when various CFC propellants were used in about 53% of all aerosols. There was disbelief, since the evidence was nonempirical and speculative at first. But in 1978 the EPA and FDA acted to ban the CFCs from all but medical aerosols—while not doing anything about their continuing use in refrigeration, air conditioning, and all other applications. (The United States was also the only country in the world to take such an action.)

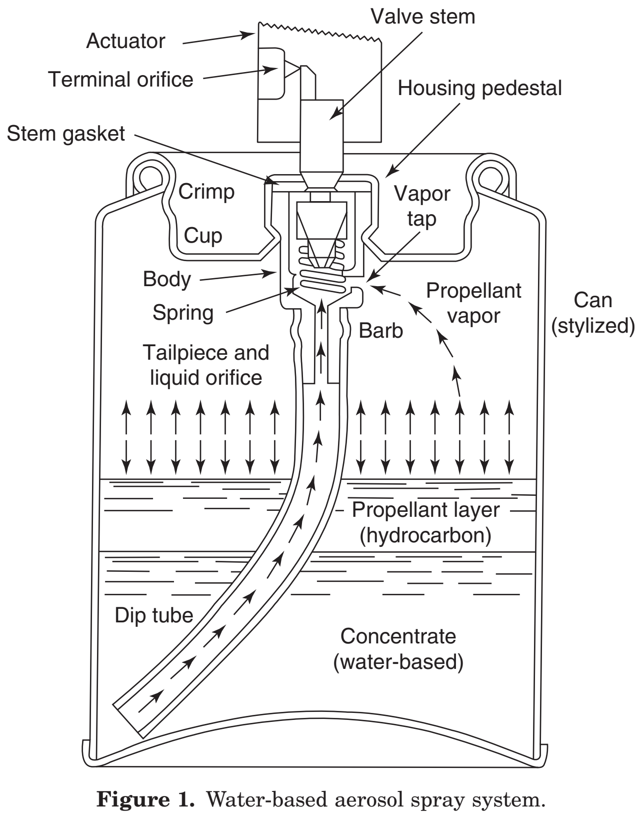

Figure 1. Water-based aerosol spray system.

Without the ability to continue using nonflammable CFCs for hair sprays and virtually all other aerosols, marketers turned to about the only viable alternatives: the liquefied petroleum gases (LPGs) (e.g., propane, *n*-butane, and isobutane). Elaborate reformulation programs were needed to evolve products of acceptably low flammability while still maintaining compatibility with active ingredients. One problem involved net weight per can. In the case of antiperspirants, which had used 90% CFC in the formula, the reformulated products now used ∼68–85% of very low-density hydrocarbons—generally isobutane. Since the density of the new antiperspirants was about 0.68 g/mL (at room temperature), compared to about 1.38 g/mL for the CFC predecessors, marketers could fit only about half the previous product weight into their cans. Consumers thought the cans were “only half full,” and this sparked a degree of discontentment that acted to plummet the sales of this particular product to about 25–30% of what they had been, prior to 1978.

In 1989 the U.S. Congress passed thr Clean Air Amendments Act (CAAA), which among many things directed the U.S. EPA to confirm the probable ozone depletion status of hydofluorocarbons propellants, the Halons, and a number of polychlorinated solvents. By 1993, all of these propellants and solvents were banned. In the years that followed, the aerosol industry had to cope with two more propellant sanctions. The first came in a finding that many VOCs, when released into the air, could directly increase the level of tropospheric ozone. This problem was the most intense in southern California. The California Air Resources Board (CARB) wanted reformulation of virtually every aerosol to reduce the VOC content. CARB plans to cascade the VOC contents of aerosols until at least 2023. The final, and still developing, threat relates to the global warming issues. The HFCs have been at the center of this issue. HFC-134a is primarily used in metered dose inhalants and life safety aerosols—for example, car tire sealants and inflators, air conditioner refill units, pepper sprays, boat horns, electronic de-dusters, and electric circuit board freezant testers. It has a rather high GWP, having a potency 1300 times that of carbon dioxide. HFC-152a is more important for aerosol purposes. It is used in underarm products and hairsprays. It is a mild global warming agent with a potency of 120 times that of carbon dioxide. HFC-227ea has had very little impact on the aerosols industry. See Table 1 for the globabl warming potentials of the various propellents.

By 2005, regulatory committees accelerated their pace of activities. European aerosol associations banned production of HFC-152a aerosols, although not much was used at the time. In 2010 or 2011, The European Economic

Table 1. Global Warming Potentials (GWP) of Aerosol Propellants

Propellant	Lifetime (yr)	GWP (100 yr ITH)
Carbon dioxide	~65	1.000
Propane	0.03	nil
Butanes	0.01	nil
Dimethyl ether (DME)	0.02	nil
HFC-152a	1.5	140
HFC-134a	14	1300
HFC-227ea	41	3300
Nitrous oxide	120	320

Community will vote whether to ban most HFC propellants Denmark and Austria have already voted. In 2007, the Province of Manitoba, Canada, enacted a ban on all aerosls containing HFC-134a.

California's new Public Law AB-32 requires the 25% of reduction of global warming gases by the year 2020 (translates to 70 × 106 metric tons). The Climate Action team has been formed to implement this goal. They will target any gas mentioned in the Kyoto Protocol, such as HFCs, nitrous oxide, and carbon dioxide in the case of aerosols. They may allow the use of HFC-134a, but will ban the introduction of any new products. They may also investigate the possibilty of replacing HFC-134a with HFC 152a, or a future propellant, HFC-16 (fluoroethane), which has an extremely low potency of just 12 times that of carbon dioxide and a half-life of 110 days. A number of clarifying amendments to the Act are scheduled in late 2008.

PROPELLANT CHEMISTRY

Propellants must meet numerous requirements to be ideal for aerosols. Many of these are as follows:

1. Reasonable boiling point and vapor pressure
2. Reasonable cost
3. Acceptable toxicology profile
   a. Acute
   b. Subacute
   c. Chronic
4. Acceptable low odor
5. Acceptable environmental aspects
   a. Minimum effect on stratospheric ozone
   b. Minimum effect on tropospheric ozone effects
6. Flammability consideration
7. Stability consideration
   a. Hydrolysis
   b. Alcoholysis
   c. Polymerization
8. Solvent properties
   a. Useful in some formulas
   b. Sometimes detrimental to elastomers
9. Purity

The CFCs came close to being ideal, except for their great chemical stability, which brought about the free-radical depletion of stratospheric ozone. Current propellants are all considerably less than ideal. The hydrocarbon gases (LPGs) indirectly act to produce tropospheric ozone, or smog, but their major drawback is their extreme flammability. Dimethyl ether is rather uniquely water-soluble, but it is also flammable and has such a strong solvent action that gaskets may be attacked and corrosion possibilities are enhanced. Carbon dioxide is nonflammable, but acidic if added to water. In any event, no more than about ~3–6% can generally be added before aerosol pressures reach the regulatory limits imposed on aerosols by the U.S. Department of Transportation. These and other general properties of the available propellants are given in Table 2.

A selection of the physical properties of aerosol propellants is presented in Table 3 (hydrocarbons), Table 4 (DME and HFC-152a), and Table 5 (compressed gases). The propellants may be mixed with other propellants, or with various aerosol concentrates, in order to achieve any reasonable product pressure. Entrapped air, present in all aerosol dispensers to varying degrees, adds about 6–21 psi (0.41–1.45 bar) to the propellant pressure.

The usual aerosol pressures vary within ~30–70 psig at 70°F (2.06–4.83 bar at 21°C). In the special cases of CO_2 and N_2O propellants, pressures are typically 85–95 psig at 70°F (5.86–6.55 bar at 21°C), and where nitrogen or compressed air (CAIR) are used, pressures may be as high as 141 psig at 70°F (9.72 bar at 21°C). All these ranges are designed to keep the aerosol pressure at or below 180 psig at 130°F (12.41 bar at 55.4°C), which is the

Table 2. General Propellant Comparisons[a]

	Hydrocarbons	DME	HFC	Compressed Gases
Flammability	Flammable	Flammable	Flammable and nonflammable	Nonflammable
Toxicity	Low	Low	Low	Low
Solvency	Poor	Good	Poor	Poor
Density	Low	Low	Intermediate	—
Solubility in water	Low	High	Low	Low
Environmental concerns	VOC	VOC	GWP	None
Cost	Low	Low	High	Low

[a] Abbreviations: DME, dimethyl ether; HFC, hydrofluorocarbon; VOC, volatile organic compound (as defined by regulators); GWP, global warming potential.

Table 3. Properties of the Hydrocarbon Propellants

	Propane	Isobutane	*n*-Butane
Formula	C_3H_8	i-C_4H_{10}	n-C_4H_{10}
Molecular weight	44.1	58.1	58.1
Boiling point, °F	–43.7	10.9	31.1
Vapor pressure, psig			
70°F	109	31	17
130°F	257	97	67
Density (g/mL), 70°F	0.50	0.56	0.58
Solubility in water (wt%), 70°F	0.01	0.01	0.01
Kauri–butanol value	15	17	20
Flammability limits in air (vol%)	2.2–9.5	1.8–8.4	1.8–8.5
Flash point, °F	–156	–117	–101

limit set by the U.S. Department of Transportation (DOT) for the strongest of the three standard aerosol cans. Pressures increase very rapidly with increasing temperature for those formulas that contain large amounts of lower pressure propellants, such as isobutane. On the other hand, nitrogen, which often has a negligible solubility in the concentrate, increases in pressure more or less in harmony with Charles' law.

Aerosols will buckle (permanently deform) and finally burst if overheated. The label almost invariably warns against heating higher than about 120°F. Some labels list 130°F. Bursting aerosol cans pose a severe hazard and may be life-threatening. In some cases the contents may also ignite, causing an additional hazard. A limited number of aerosol cans have fitments designed to allow the contents to be released in a controlled fashion if they are overheated. For three-piece ETP cans, about 10 small indentations may be notched into the top of the top double seam. The can is designed so that the dome sections will evert (or "jump up," somewhat) well below the minimum bursting pressure. When this occurs, the work-hardened indentations will reform into little apertures, releasing the overheated product. This is known as the *pressure-relief mechanism* (PRM). Aluminum cans and others without a top double seam may be relieved by means of various fixtures in the base.

Marketers have a concern that gas will be inadvertently dispensed. As a rule, a negligible amount of propellant is lost by leakage, through the valve or past the junction of valve cup and can bead. The consumer may hold the can in such a position that the dip tube end protrudes into the headspace, particularly near the end of the can, when little liquid is left and for a product such as surface sprays when the dispenser is tilted strongly downward to spray (see Figure 2). These episodes will act to partly depressurize the dispenser quickly changing the properties of the product. In severe cases, all products may not be delivered at the time the internal pressure sinks to zero (see Figure 2). There are two ways to solve this problem. The older way is to fill the can to 50 vol% rather than the usual 75–90 vol%. With a relatively large, well-pressurized headspace to start with, the drawdown pressure will be reduced as the dispenser is used up. The second is to use an initial higher pressure, which is not always possible because of the U.S. DOT ceiling of 180 psig at 130°F (12.41 bars at 54.4°C). A DOT exempted can would be required.

SAFETY

The aerosol industry had to learn, over the years, how to safely handle flammable propellants and gas them into dispensers. They must be manipulated in closed systems. In larger filling plants, flammable propellants are stored in 1 to ~10 bulk tanks, ranging up to 30,000 gal (113,500 L) in nominal capacity. Two-inch (51 mm) double-strength steel pipes lead from the bottom of each tank past valves to a low-pressure pump. From there the line may lead to a blending station, followed by a manifolding unit, to direct the liquefied gas (or mixture) to the appropriate gas house. In this enclosure, which is often outside the main establishment because of the potential hazards, the gas supply goes to piston-operated gassers. Two types are used. The earliest, now called a "through-the-valve" (T-t-V) gasser, charges the propellant backward through the valve and into the sealed can. The liquistatic pressure ranges from about 600 to 950 psig (41–66 bars), and the temperature is often controlled to about 104°F (40°C) for a number of technical reasons. Many valves are designed to backflow propellant at very high rates, so that a typical 18-head rotary T-t-V gasser may attain speeds of up to ~350–400 cans per minute.

The other gassing machine performs three consecutive functions: (i) After lifting the lossely inserted valve slightly, it draws a partial vacuum on the can; (ii) then it adds the liquid propellant under high pressure, around

Table 4. Properties of DME and HFC-152a

	DME	HFC-152a
Formula	CH_3OCH_3	CH_3CHF_2
Molecular weight	46	66
Boiling point, °F	–12.7	–12.5
Vapor pressure, psig		
70°F	63	62
130°F	174	176
Density (g/mL), 70°F	0.66	0.91
Solubility in water (wt%), autogenous pressure	34	1.7
Kauri–butanol value	60	11
Flammability limits in air (vol%)	3.4–18	3.9–16.9
Flash point, °F	–42	< –58

Table 5. Physical Properties of Compressed Gases

	Carbon Dioxide	Nitrous Oxide	Nitrogen	CAIR
Formula	CO_2	N_2O	N_2	N_2/O_2
Molecular weight	44.0	44.0	28.0	29.1
Boiling point, °F	−108.4	−126.4	−320.8	−320
Boiling point, °C	−78	−88	−196	−196
Critical temperature, °F	87.8	98.6	−233	−231
Critical temperature, °C	31.0	37.0	−147	−146
Solubility in water[a]	0.82	0.60	0.016	0.017
Flammability	None	None	None	None
Liquid density (g/mL at 70°F, or 21.1°C)	0.81	0.83	N/A	N/A

[a] Volume of gas per volume of liquid water, at 70ºF, or 21.1ºC and 1 atmosphere of absolute pressure.

the periphery of the lifted valve cup; and (iii) finally, it presses the cup firmly down on the can bead and performs a crimping (swaging) operation to hermetically seal the can. A minor disadvantage of this machine is that above 3.0 mL of liquid propellant is flashed off when the filling head lifts off the sealed can. This must be exhausted through a floor-sweeping ventilation system.

Ideally the gassing facility should be a strongly constructed room located at least 2 m (6.5 ft) from the main establishment. Since hydrocarbon gases will be released in this room, it is vital to install an adequate ventilation system. The best approach is to add "make-up' air through floor level registers along one wall of the the gashouse to remove it through registers a the bottom of the opposite wall. The ventilation should flow in a laminar fashion across the entire floor. The heavy hydrocarbon vapors will be captured and drawn up into the exhaust system at a point 3 m (10 ft) above the roofline. A gas sensor is used to provide assurance that excessive hydrocarbon vapors are not being produced. Frictonal sparks or static disharges can be detected by a double electric eye installation, which can turn on a water deluge system. In warm climates, the

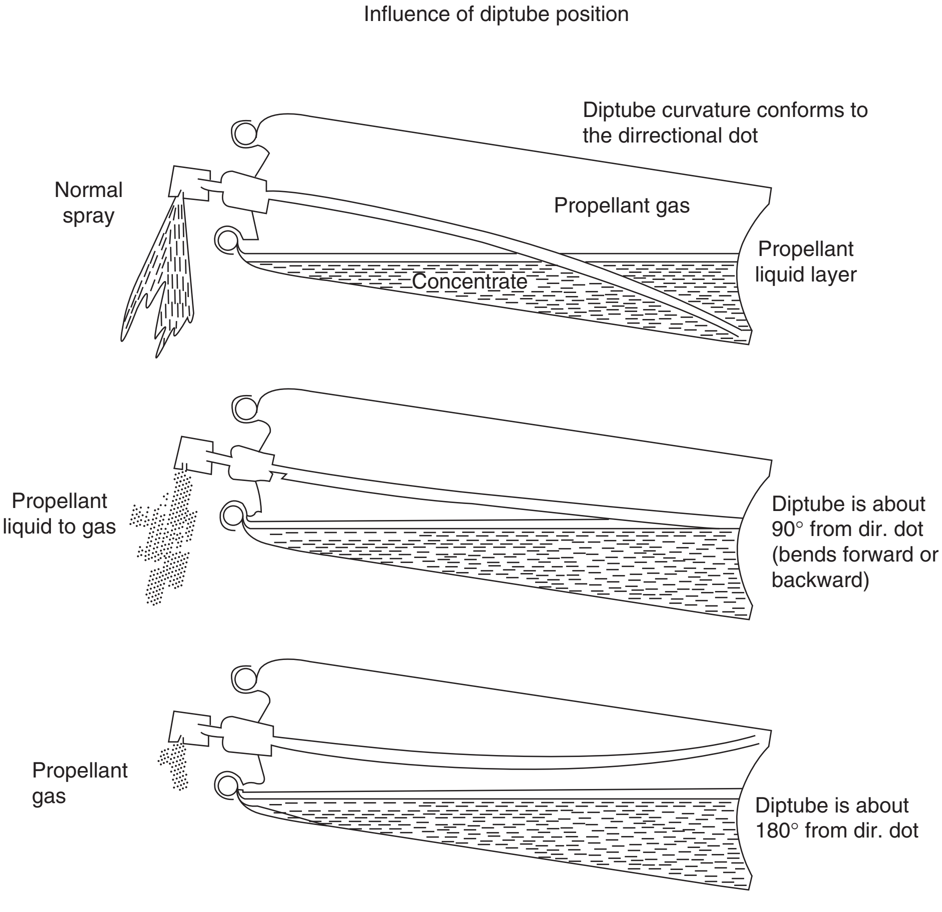

The propellant layer has a volume of about 7% that of the concentrate layer.

Figure 2. Influence of diptube position.

gashouse may be replaced by open air gassing arrangements. Unfortunately, there are many aerosols lines where the gassing operation is done inside the main establishment. This is common in Japan. Other than excellent maintenance and normal ventilation, there is no provision for possible leakage of liquid hydrocarbons from pipes, hoses, valves or other equipment. Firms in the United States that cannot construct an outside gashouse, opt to enclose the gassing operation in very strong steel cubicles of minimum size equipped with excellent ventilation, gas sensors, and other engineering safety features.

The U.S. EPA is interested in plant emissions of volatile organic compounds (VOCs), especially in the case of facilities located in VOC nonattainment areas, such as larger cities. If one considers the loss of (say) isobutane from an intermediate to large aerosol plant, running a total of 1000 cans per minute; at 3.0-mL loss per can, the total loss will be ~47.5 gal (180 L) per hour, or 380 gal per 8-h shift. The EPA has required some plants to dramatically reduce their emission rates, either by changing gassers, adding conservation accessories to their U-t-C gassers, or collecting the bulk of the released gas and compressing it to liquid in a “gasser waste” storage tank. In some cases the “gasser waste” may be used as heating fuel for the plant boiler.

The extreme flammability of hydrocarbon gases has necessitated equipping gas houses with sophisticated sensing devices, halon-powered extinguishing equipment, deluge systems, regular and emergency ventilation attributes, and a complex electroprotective system. Employees must be carefully trained in fire safety. There is a minor but significant trend to depopulate gas houses, so that, if a catastrophe occurs, one or more lives will not be jeopardized.

As little as 0.58 fl oz (9.6 g) of isobutane, poured into an open-top 55-gal (200-L) steel drum and mixed with the air in the drum, will produce about a 500-L “fireball” if ignited. As little as 2.0 g, poured into the drum but unmixed, will produce flames that fill most of the drum if ignited. The following data show that the hydrocarbons cannot be detected by odor and are substantially heavier than air:

1. Odorless
2. Colorless
3. Heavier than air
   a. Two times
4. Narrow limits of flammability
   a. LEL 2%
   b. HEL 10%
5. Low ignition temperature
   a. 825–900°F
6. Expansion
   a. Liquid to vapor = 1–270

This means that they have a tendency to collect in floor-level areas. Mixtures of 1.86–2.04 vol% gas in air are potentially flammable. Fortunately for the industry, practically all hydrocarbon-type aerosols are used for only a few seconds at a time. But for those paints, total-release indoor insect foggers, and a few other products, where large amounts are sprayed at a time, good ventilation or dilution is quite important, and such admonitions will be seen on the can labels.

CONCLUSIONS

As can be seen, the technology of aerosol propellants is far from simplistic A fair number of personal care products may have as many as four different propellants, all contibuting to the desired properties and quality of the final formulation. Each propellant has its own profile of pressure, density, water solubilty, cost and other properties. They must be used to their greatest advantage by formulators and packaging experts.

BIBLIOGRAPHY

General References

The Aerosol Guide, 8th edition, Consumer Speciality Products Associations, Washington, D.C., 1995, 10th edition, CD to be published in 2009.

Aerosol Propellents: Considerations for Effective Handling in the Aerosol Plant and Laboratory, Aerosol Divison, Consumer Speciality Products Association, Inc., Washington, D.C., 1999.

M. A, Johnson, “Carbon Dioxide—Our Oldest and Newest Propellant,” *Spray Technol. Mktg.* (September 2007).

PULP, MOLDED

Edwin H. Waldman
Keyes Fibre Company
Updated by Staff

INTRODUCTION

Like the paper-making process itself, the origins of pulp molding are pretty well obscured by antiquity. One assumes that artisans in early Oriental, Egyptian, and Greco-Roman civilizations who were involved with screen-felting of vegetable fibers into sheets of paper rapidly discovered benefits that derived from embossing the screening material to obtain contours. It is believed that ornate wall- and ceiling-molding artifacts of those civilizations were fabricated in this manner. With the rapid development of the paper industry around the turn of the twentieth century, disposable molded pulp products began to find their way into the mainstream of commercial life as protective vehicles for transport of fragile foods such as pies and eggs. The economics of manufacture of pie transfer plates and egg trays have kept these unglamorous products in the marketplace. Although certainly in the mature part of the viability curve, they remain of considerable commercial interest.

FABRICATION

The term "molded pulp" is used to describe three-dimensional packaging and food-service articles that are manufactured by forming from an aqueous slurry of cellulosic fibers into discrete products on screened, formaminated molds in a process analogous to continuous-sheet cylinder-board papermaking. It is not unusual to find the pulp-molding process grouped with other converting processes such as compression molding of fiber-reinforced resin parts and pressboard converting because of the similarities in finishing steps and common markets, but the molded-pulp process and its products are fundamentally unique. Two basic methods of fabrication are used: plain molding and precision molding (see Figure 1).

Products of plain molding are as fundamental as the triangular corner protector pads used in furniture and appliance packing crates, and they are as complex as

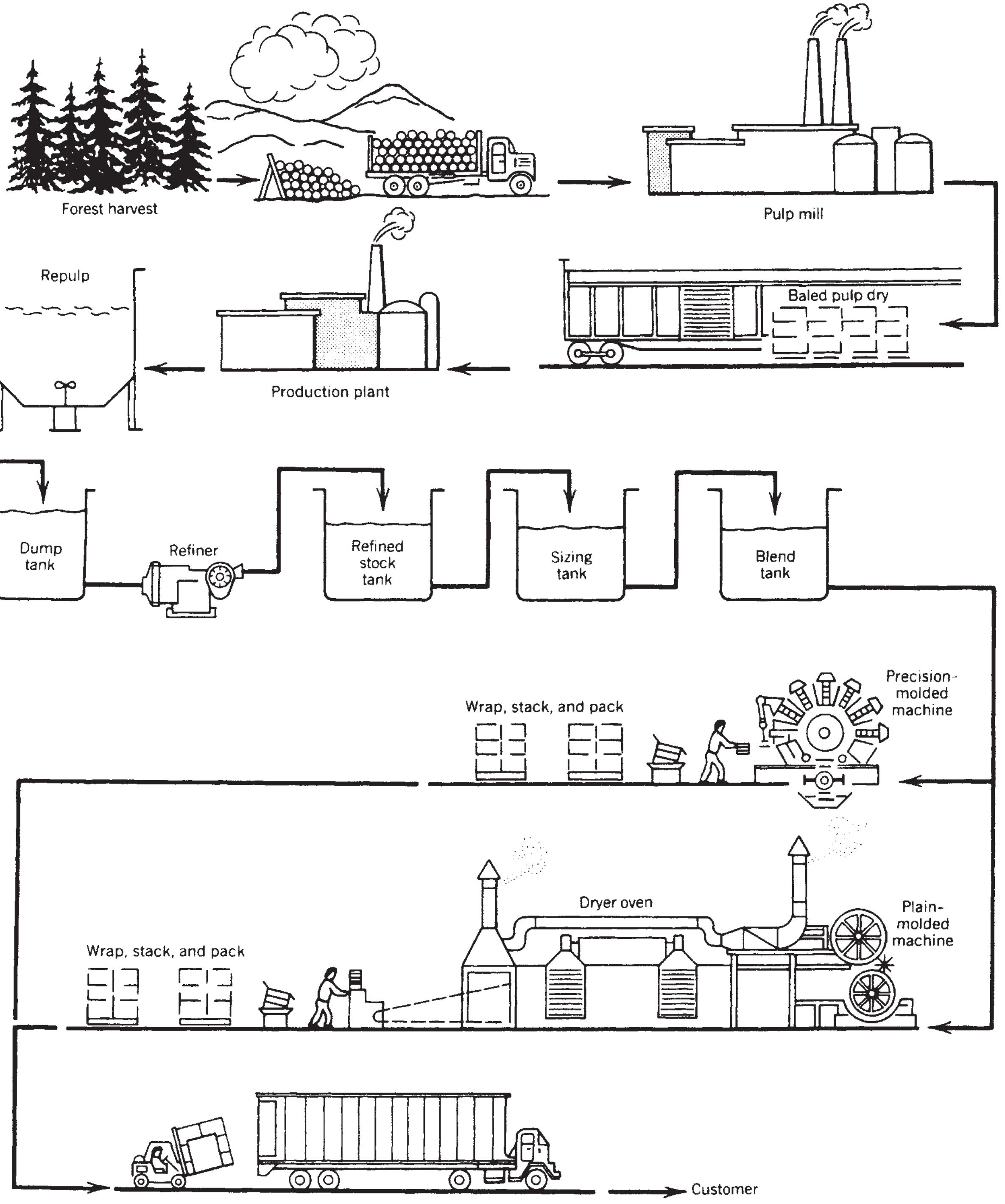

Figure 1. The molded-fiber process.

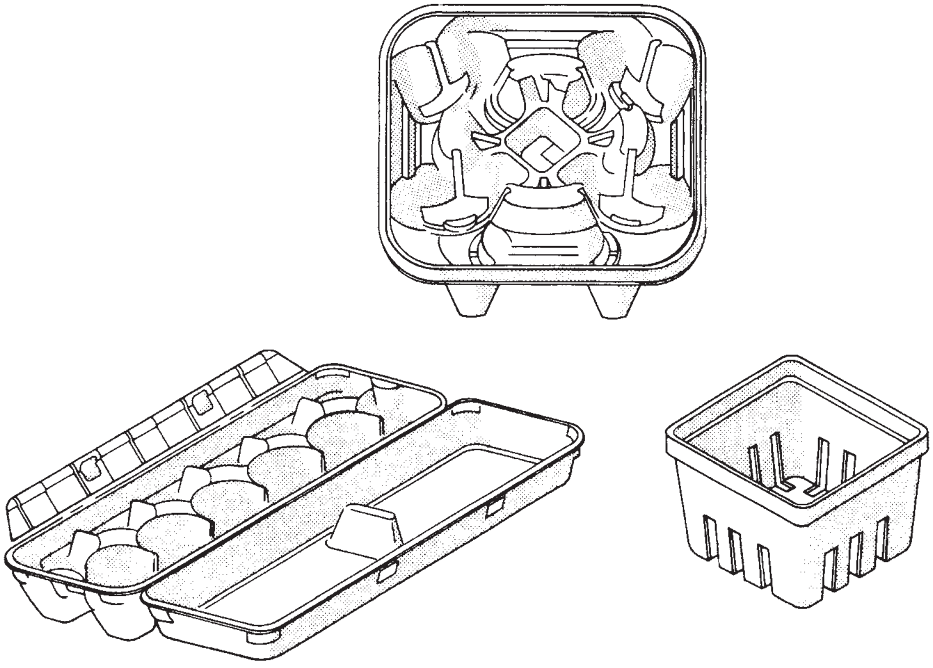

Figure 2. Examples of plain-molded products.

hinge-lidded, self-locking, one-dozen egg cartons enhanced by hot afterpressing and graphic print applications. Between these extremes are products such as berry punnets, peat pots, produce prepackaging trays, and egg and apple-locator trays (see Figure 2). Such products have commercial relevance because they are produced on highly automated and productive machine modules (>20 tons (>18.1 metric tons) per day), are nestable for efficient transport to users, are low in density in comparison to converted paperboard products (see Paperboard), and are fabricated from some of the least-costly raw materials available (recycled mechanical cellulosic fibers, groundwood, sphagnum peat fiber, etc).

Precision-molded processing differs from its higher-speed forerunner in drying methodology. Forming of the product and the removal of mechanically bound water by vacuum-assisted compaction is essentially the same; but at that point, final drying is accomplished by step- or continuously applied heat between matching mold surfaces (see Figure 3). Precision-molded products include disposable plates, dishes, bowls, and specialty products such as loudspeaker membranes and cones (see Figure 4). These products are typically denser, smoother, and more exactly dimensioned and contoured than their free dried counterparts. Virtually any plain-molded product can also be made in this manner, but they would be more costly because of the complexity of tooling and higher electrical energy required.

Many internal treatments are given to the slurries to render them more valuable to their users. By blending fibers that have received different process and refining treatments, "green" matrix strength can be enhanced; drainage, internal bond strength, and shrinkage can be altered; and biodegradability of products after or during use can be controlled. Colloidal rosin or wax emulsions are commonly added together with paper-making alum to convert hydrophilic fiber into the water-repellent products essential to food handling. Fluorocarbon chemicals in concert with cationic retention aids can be added to impart repellency to low-surface-tension oil or greasy liquids. Fertilizers, dyestuffs, flame retardants, and modified starches or wet-strength resins are among other additives that are also commonly added internally where specific end-use effects are desired.

Secondary treatments are sometimes given to nondisposable molded-pulp products. Cafeteria serving trays have been made by after-pressing laminates of molded-fiber preforms loaded with thermosetting polymers. Luggage shells, automobile trunk wells, glove compartments, and door liners are made this way. The hot afterpressing and decorative printing of egg cartons also represents secondary treatment that enhances printability and product automation. Colored molded packaging can be

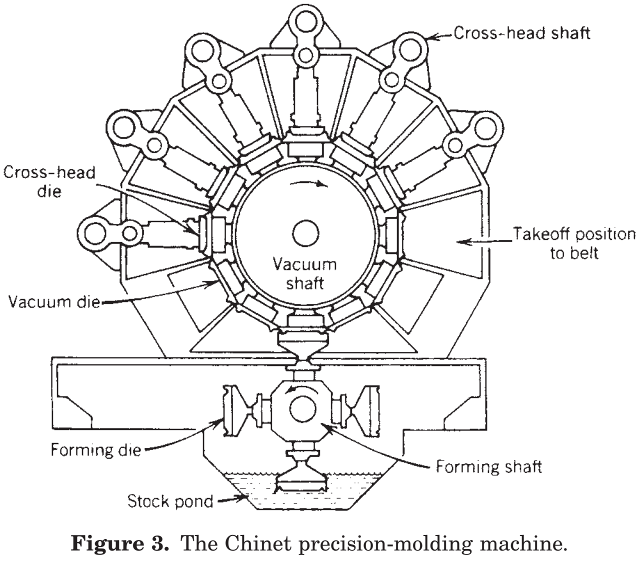

Figure 3. The Chinet precision-molding machine.

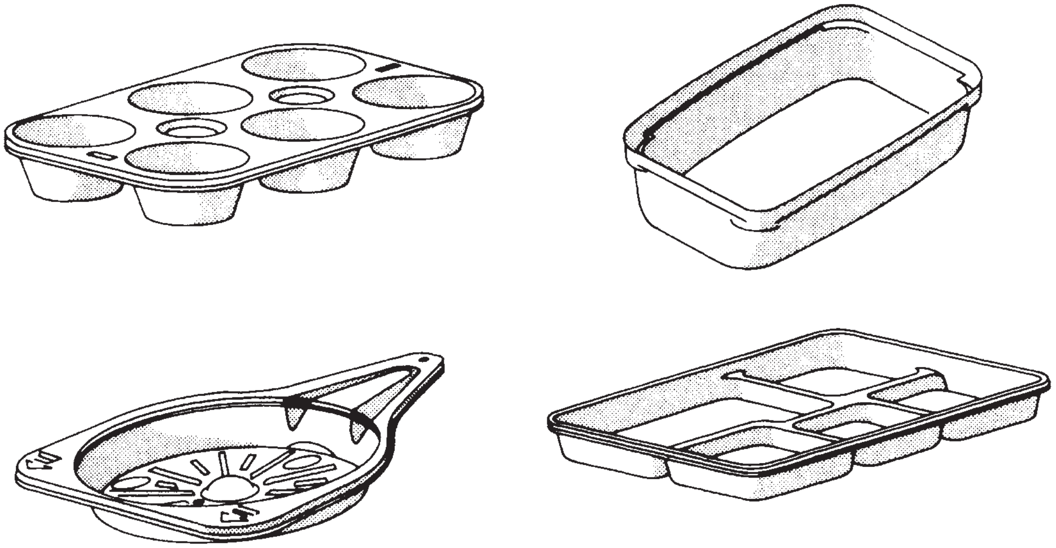

Figure 4. Examples of precision-molded machine products.

produced using a dyed pulp. Decorative finishes can be applied by spray gun. Text (such as brand and end-user's names) and symbols (such as the recyclable logo or trademarks) can be incorporated into the mold to produce an embossed or debossed effect.

An example of secondary treatment is the lamination of a thin thermoplastic film to one surface of molded-pulp trays by vacuum-thermoforming techniques. Products of this type are being used for frozen dinners because of their "dual ovenability" (i.e., their suitability for use in microwave and convection ovens).

The use of computer-aided design has facilitated mold design and enabled more complicated designs to be reproduced than before (1).

APPLICATIONS

Molded-pulp packaging provides a cost-effective solution for the packaging of a wide range of products, many of which are fragile such as eggs, fruits, and vials. Clamshell containers are used for eggs and bottles. Molded pulp packaging provides an important use of recovered paper and paperboard. Molded pulp is based on a renewable resource and provides the environmentlal benefits of recyclability and biodegradability.

BIBLIOGRAPHY

Edwin H. Waldman, "Pulp, Molded" in *The Wiley Encyclopedia of Packaging Technology*, 1st edition, John Wiley & Sons, New York, 1986, pp. 559–561; 2nd edition, 1997, pp. 791–794.

Cited Publication

1. C. Hogarth, "Moulded-Pulp Packaging" in M. J. Kirwan, ed., *Paper and Paperboard Technology*, Blackwell Publishng, London, 2005, Chapter 14.

Q

QUALIFYING

Qualifying is the act of setting up and administering a training program that ensures that the people who will be interfacing with the packaging line are given a thorough overview of the packaging line and a detailed program on what they need to know to complete their tasks without hesitation or guessing. All training must address the following questions:

When should training be done?
What training should be done?
How should we do training?
Where should we do training?
How much is enough training?
Manuals and other self-help tools?
Performance reviews and continuing improvement?
Company standards and policy?

R

RADIATION: EFFECT ON PACKAGING MATERIALS

Hyun Jin Park
Graduate School of
Biotechnology,
Korea University, Seoul,
Korea

Dae Hoon Jeon
Department of Food Packaging,
Korea Food and Drug
Administration, Seoul,
Korea

INTRODUCTION

Packaging makes food more convenient and improves its shelf life by protecting it from micro-organisms, biological or chemical changes, and physical damage. As a result, packaging has become an indispensable element in the food manufacturing process (1). Plastic materials are also used in medical devices or surgical preparations (2).

The treatment of prepackaged foods with ionizing radiation such as γ- or X-ray is gradually becoming more popular as a food-preservation technique. The irradiation of prepackaged foods helps prevent subsequent microbial reinfection and insect increment (3). Generally, packaging prevents water loss and mechanical damage of foods, makes handling easier, and improves its marketability. Good packaging materials must maintain functional qualities such as impermeability, mechanical strength, seal stability, color, and haze in the course of the radiation process. Also, the packaging materials must not release additives or radiation-induced reaction products into the foods during irradiation, because these materials contaminate the prepackaged foods and affect the safety of consumers. Most polymers listed in the U.S. Code of Federal Regulation (CFR) 21 §179.45 were approved for γ-irradiation by the U.S. Food and Drug Administration (FDA) in the 1960s through petitions by the Atomic Energy Commission ($\leqslant$10 kGy) and the U.S. Army ($\leqslant$60 kGy) (4–6). Polymers used to package food intended for irradiation must currently receive separate U.S. FDA approvals for electron-beam (e-beam), γ-radiation, and X-radiation. These three forms of irradiation in a vacuum have virtually indistinguishable effects on polymers. However, in air, irradiation damage is favored by slow-dose rates such as γ-irradiation (7).

It is becoming more common to use ionizing radiation instead of a high-pressure autoclave or ethylene oxide treatment when sterilizing medical products (8). Specifically, radiation is popular because it is easier and more economically efficient than using a high-pressure autoclave or treating medical products with ethylene oxide (9). When using ionization radiation for the sterilization of medical devices, the International Atomic Energy Agency (IAEA) recommends packaging polymers such as polyethylene (PE), polyester, polypropylene (PP), nylon, poly (vinyl chloride) (PVC), and so forth (8).

The effects of radiation on polymers may be classified as scission, crosslinking, structural modifications, and chemical reactions based on different values of the absorbed dose. Scission of the polymer chains results in a decrease in molecular weight, whereas crosslinking results in an increase. Structural modifications are changes in the number of unsaturated polymer chains and presence of charged units in polymer chains. Chemical reactions lead to small volatile products and, eventually, organic radicals, which are potential contaminants of packaged foods (10, 11).

IRRADIATION OF PACKAGING MATERIALS

Status and Trends

Food irradiation is the treatment of food by a certain type of energy. The process involves exposing the food, either packaged or in bulk, to carefully regulated amounts of ionizing radiation for a specific time to achieve certain desirable objectives (12). The standard was adopted by the Codex Alimentarius Commission, a joint body of the Food and Agriculture Organization of the United Nations (FAO) and the World Health Organization (WHO), which is responsible for issuing food standards to protect consumer health and facilitate fair practices in food trade; the WHO represents more than 150 governments. The Codex General Standard for food irradiation was based on the findings of a Joint Expert Committee on Food Irradiation (JECFI) convened by the FAO, WHO and the International Atomic Energy Agency (IAEA) (13). The JECFI has evaluated available data in 1964, 1969, 1976, and 1980. In 1980, it concluded that “the irradiation of any food commodity” up to an overall average dose of 10 kGy “presents no toxicological hazard” and requires no more testing. It stated that irradiation up to 10 kGy “introduces no special nutritional or microbiological problems” in foods. In September 1997, a study group was jointly convened by the WHO, FAO, and IAEA to evaluate the wholesomeness of food irradiated with doses above 10 kGy. Food irradiation technologies are considered safe as long as the sensory qualities of food are maintained and harmful micro-organisms are destroyed (14, 15). Polymers listed in the U.S. CFR 21 §179.45 “Packaging Materials for Use during the Irradiation of Pre-packaged Foods” are shown in Table 1 (16). These early submissions requested approval for γ-treatment only. Although electron beam treatment was technically attainable, its use for routine polymer treatment was not economically favorable (17). Commercialization of X-ray treatment was even less attractive than that

Table 1. Packaging materials for use during the irradiation of prepackaged foods listed in the U.S. CFR 21 §179.45. (16)

Packaging material	Approved dose (kGy)
Nitrocellulose-coated cellophane	10
Vinylidene chloride copolymer-coated cellophane	10
Glassine paper	10
Wax-coated paperboard	10
Polyolefin film	10
Polyolefin film containing coatings made of a vinylidene chloride copolymer with one or more of the following comonomers: acrylic acid, acrylonitrile, itaconic acid, methyl acrylate, and methyl methacrylate	10
Kraft paper (flour packaging only)	10
Polyethylene terephthalate film	10
Polyethylene terephthalate film containing coatings made of a vinylidene chloride copolymer with one or more of the following comonomers: acrylic acid, acrylonitrile, itaconic acid, methyl acrylate, and methyl methacrylate	10
Polyethylene terephthalate film containing coatings made of polyethylene	10
Polystyrene film	10
Rubber hydrochloride film	10
Vinylidene chloride-vinyl chloride copolymer	10
Nylon-11	10
Ethylene-vinyl acetate copolymer film	30
Vegetable parchment	60
Polyethylene film	60
Polyethylene terephthalate film	60
Nylon-6 film	60
Vinyl chloride-vinyl acetate copolymer film	60

of γ-ray use. X-rays are produced at low yields through electron beam bombardment of heavy metal targets. Over the past 20 years, the unit cost of electron beam treatment has declined steadily. The higher dose rates associated with an electron beam and the ability to switch radiation ON and OFF have made the treatment attractive to food processors. The economics of X-ray treatment still do not favor their wide-scale use in food irradiation. However, X-rays have the advantage of deep penetration, and the major advantage of electron beams continues to be that radiation can be switched ON and OFF as needed. For these reasons, the use of X-rays in the field of food irradiation will be neglected (7).

The requirements for the certification and routine control of the sterilization of medical devices by radiation are mentioned in the European standard EN 552. EN 552 provides two possible approaches in setting up the sterilizing dose. One is to use knowledge of the number and resistance to radiation (if known) of the inherent microbial population present on or in the medical device. The other is to use a minimum dose of 25 kGy. Because EN 552 was published in 1994, there has been broad discussion and debate about the degree to which this particular guidance should be applied. As a result, a consensus has emerged that evidence is required to support the effectiveness of 25 kGy against both the numbers of contaminating micro-organisms on the product and the resistance to radiation of these organisms. Therefore, the Panel has developed a definition of microbiological quality that encompasses both numbers of micro-organisms and their resistance to radiation (18, 19).

Irradiation Mechanisms for Polymeric Packaging Materials

The types of radiation used in material treatments are limited to radiations from high-energy γ-rays, X-rays, and accelerated electrons. X-rays with varying energies are generated by machines. γ-rays with specific energies come from the spontaneous disintegration of radionuclides. Naturally existing and man-made radionuclides, which are also called radioactive isotopes or radioisotopes, emit radiation as they spontaneously revert to a stable state. There is a half-life specific for each radionuclide of a distinct element. The becquerel (Bq) is the unit of radioactivity and equals one disintegration per second (Table 2). Energies from these radiation sources are too low to induce radioactivity in any material, including food and medical products. Cobalt-60 is a radionuclide used almost solely for the irradiation of food and medical products by γ-rays. It is produced by neutron bombardment in a nuclear reactor of the metal cobalt-59, and then it is doubly encapsulated in stainless steel to prevent any leakage during its use in an irradiator. The γ-rays produced are highly penetrating and can be used to treat full boxes of fresh or frozen food. Cesium-137 is the only other γ-emitting radionuclide acceptable for industrial processing of materials. It can be obtained from used nuclear fuel elements (14). However, there is no supply of commercial quantities of cesium-137. Cobalt-60 has therefore become the chosen source for γ-radiation. Over 80% of the cobalt-60 available in the world

Table 2. Unit of radiation dose and radioactivity (14)

	Absorbed dose	Radioactivity
Unit	gray (Gy)	becquel (Bq)
Definition	1 Gy = 1 J/kg	1 Bq = 1 disintegration/s
Former unit	rad	curie (Ci)
Conversion	1 rad = 0.01 Gy	1 Ci = 3.7×10^{10} Bq = 37 GBq
	1 krad = 10 Gy	1 kCi = 37 TBq
	1 mrad = 10 kGy	1 mCi = 37 PBq

market is produced in Canada. Other source producers are the Russian Federation, the People's Republic of China, India and South Africa (20). High-energy electron beams can be produced from machines that can accelerate electrons to near the speed of light using a linear accelerator. Because electrons cannot penetrate very far into food and medical products compared with γ-radiation or X-rays, they can only be used for processing food with thin packages. X-rays of various energies are produced when a beam of accelerated electrons bombards a metallic target. The efficiency of conversion from electrons to X-rays is generally less than 10%. Radiation dose is the quantity of radiation energy absorbed by the food or medical products as it passes through the radiation field during processing. It is measured using a unit called the gray (Gy). In terms of energy relationships, 1 Gy equals 1 J of energy absorbed per kilogram of food being irradiated. The maximum dose of 10 kGy recommended by the Codex General Standard for Irradiated Foods is equivalent to the heat energy required to increase the temperature of water by 2.4°C (Table 2). Irradiation is often referred to as a cold pasteurization process because it can accomplish the same objective as the thermal pasteurization of liquid foods, for example milk, without any substantial increase in product temperature (14). The use of X-rays is considered low-ionization-density radiation. As a result, X-rays tend to reveal deep penetration of over 1.0 M in organic media and deposit their energy in at most a few discrete steps. Incident electrons, in contrast, are charged, have mass, and interact readily with polymer electrons through coulombic repulsion. Their energy tends to be dissipated in an almost linear fashion through rapid interactions with countless polymer electrons (7, 21). X-rays and γ-rays are electromagnetic waves with a much shorter wavelength than visible and ultraviolet (UV) light. The energy levels of X-rays overlap with γ-rays. The X-ray is distinguished from γ-ray by its origin. γ-rays originate from atomic nuclei through isotopic decay, whereas X-rays are produced when high-energy electrons decelerate on impact with the nucleus of another molecule (22). When an X-ray or γ-ray with greater energy than ionization energy of the weakest electron collides with a polymer, the weakest electron is thrown out from the polymer and a positive ion remains.

$$\mathrm{AB} \rightarrow \mathrm{AB}^{+} + \mathrm{e}^{-}$$

Generally, the amount of energy needed to create this ion pair is about 32.5 eV, and this ionization effect is completed within about 10^{-12} s.

Free radicals are formed from the production of ion pairs and immediately results in molecular dissociation:

$$\mathrm{AB}\bullet \rightarrow \mathrm{A}^{+} + \mathrm{B}\bullet + \mathrm{e}$$

If the energy transferred to an electron is less than the ionization potential of the atom, then there may still be enough energy to promote the electron from its ground state to its excited state, which is referred to as excitation.

$$\mathrm{AB} \rightarrow \mathrm{AB}^{*}$$

Often, these excited states are identical with optical excitation states, and the excited molecules produce radiation-induced chemical reactions that are similar to those that result from excited states produced by the absorption of a quantum of light (21). As a result, the products of radiolysis are at least qualitatively similar to the products of photolysis in many systems.

Applications for Irradiation of Packaged Foods and Medical Products

With the exception of applications such as: (a) sprout inhibition in potatoes or onions, (b) insect disinfestation in bulk grains, or (c) the delay of post-harvest ripening of fruits, food irradiation processes are usually carried out on packaged food. There may be different reasons for the use of packaging: (1) prevention of microbial reinfection or insect growth, (2) prevention of water loss, (3) exclusion of oxygen, (4) prevention of mechanical damage during transport, or (5) improvement of handling and marketing. The packaging material used must not release radiation-induced degradation or addition products or additives into the food, and it should not lose functional qualities such as mechanical strength, seal stability, or impermeability after irradiation (23, 24).

Plastic films laminated with aluminum foil are routinely sterilized by radiation as part of the manufacturing process. They are used for sealed "bag-in-a-box" products, such as tomato paste, fruit juices, and wines. Other aseptic packaging materials, dairy product packaging, and single-serving containers, for example, cream and wine bottle corks, are also routinely sterilized by irradiation prior to filling and sealing to prevent product contamination. Other types of materials used to wrap food or other products are also routinely processed by radiation in many countries. The radiation process is used to crosslink the polymer chains for greater strength and heat resistance, for example, heat-shrink wrap (14).

The principles of International Standardization Organization (ISO) dose-setting Method 1 (ISO 11137) are basically identical to those embodied in Association for Advancement of Medical Instrumentation (AAMI) Method B1, which are described originally in the American National Standards Institute (ANSI)/AAMI ST 32-1991. The method for substantiation of 25 kGy as a medical products sterilization dose, given in ISO/TR 13409, is an adaptation of the same AAMI dose-setting method (25, 26).

PHYSICOCHEMICAL CHANGES OF POLYMERIC PACKAGING MATERIALS DURING IRRADIATION

Molecular Weight

The chemical behaviors of polystyrene (PS) and PVC at a dose of a 100-kGy electron beam were studied by size exclusion chromatography (SEC). After this treatment, the value of the weight average molecular weights (Mw) and z-average molecular weights (Mz) increased compared with control polymers. Thus, it suggested that the process of crosslinking had taken place in two polymers by in electron beam radiation. In addition, there was a slight decrease in the number of average molecular weight (Mn) after treatment. This change confirms that a splitting process occurred because Mn is sensitive to a reduction in small macromolecular species contained within the polymers (2). Degradation was the major occurrence after the initial step of γ- and electron-beam radiation of PP, which was not related to the atmosphere and/or antioxidant. However, double bond formation increased the production of branching and crosslinking reactions. A PP with a high melt strength at low dose was obtained, which indicates that controlling the branching reaction was useful for producing a polymer with special rheological properties (27).

Electron paramagnetic resonance (EPR) spectroscopy was used to characterize free radicals in γ-ray-irradiated biodegradable polymers. In general, polymers with high melting points and crystallinity had the highest yields of radicals at room temperature (28). Electron beam radiation was performed at both room temperature (293 K) and 77 K (29). The effects of γ-irradiation on the physicochemical characteristics of biaxially stretched poly (ethylene terephthalate) (PET) packaging film were investigated in the range of 0–200 kGy. The diethylene glycol (DEG) contents in PET chains were increased at low doses (5 and 10 kGy), whereas these values decreased at doses in the range of 30–200 kGy. Molecular weights, intrinsic viscosity, and the levels of carboxy end groups decreased slightly after treatment with a 60-kGy dose (30).

Polymer Structure

Polymer structure undergoes crosslinking at high doses of γ-radiation. Styrene-acrylonitrile copolymers and polybutadiene (PB) are not as resistant to radiation compared with PS but are still fairly stable. As in PS, the aromatic ring structure absorbs a large part of the radiation energy. Polybutadiene easily undergoes both crosslinking and degradation (11).

Mechanical Properties

The results of evaluations of (a) resistance to γ-radiation (0–25 kGy), (b) tensile strength, and (c) elongation at break for plastic films such as low-density polypropylene (LDPE) and bidirection copolypropylene were reported. When the radiation dose was increased to a range of 10–25 kGy, the tensile strength rate and elongation at break lowered slightly compared with the samples irradiated at a 5-kGy dose, although these samples still had values higher than those obtained from the unirradiated LDPE. This reveals that the mechanical properties of LDPE irradiated at these doses were improved. This correlates to the relation between gel formation and radiation dose. When samples of nylon/sarin/polyethylene or bidirection copolypropylene were irradiated at a dose of 5 kGy, there was a significant increase in tensile strength rate, and the elongation at break lowered slightly compared with unirradiated samples (8). In another study, the effects of γ-irradiation on ethylene vinyl alcohol copolymer (EVOH) were investigated. Irradiation increased tensile strength (TS) and elongation at break (*%E*) of EF-CR; whereas the TS of EF-XL was not significantly changed and *%E* of EF-XL decreased. Irradiation had no effect on TS and *%E* of nylon/EVOH/PP (31).

Gas Permeability

PP film samples were prepared with isotactic PP granules, which were hot pressed and cooled by three different methods to obtain three different crystalline states with various thicknesses and were γ-irradiated with a dose of 25 kGy. The diffusion of oxygen has an inverse relationship with crystallinity and film thickness (32). Irradiation of nylon/poly (vinylidene chloride) (PVDC)/ethylene vinylacetate (EVA) barrier film caused changes in mass transfers of the packaging material. γ-radiation induced higher amounts of mass transfer than beta radiation. Oxygen permeability was affected by irradiation. These concerns are particularly important in cases where barrier materials are used for maintaining the quality of prepackaged products, which are irradiated to obtain a longer shelf life (33). Oxygen permeability decreased as γ-irradiation dose increased in nonoriented and biaxially oriented EVOH and nylon/EVOH/PP (31).

Thermal Characteristics

The effect of γ irradiation and electron-beam irradiation on thermal characteristics of PP is examined with differential scanning calorimetry (DSC) and thermogravimetric analysis (TGA) coupled with Fourier transform infrared (FTIR). In the case of the higher doses, the loss of crystallinity is greater for γ-ray-treated PP than for electron-beam-treated PP. This suggests that both types of radiation cause a decrease in the length of the macromolecular chains, crosslinking, and other modifications in the crystal domains. This degradation mechanism is emphasized by the presence of air, which leads simultaneously to oxidation (34). The thermal properties of an LDPE/high-density polyethylene (HDPE) (75/25) blend after exposure to γ-radiation up to 2000 kGy have been measured. The melting and crystallization temperatures tended to decrease as the radiation dose increased and show a tendency to stabilize at higher values (35). The effects of γ-radiation dose on the isothermal and nonisothermal crystallization of LLDPE, LDPE and HDPE by DSC were studied (36). This includes a qualitative comparison of nonisothermal data and quantitative data for crystallization rate and nucleation mode. The isothermal crystallization allowed for the observation of changes in the crystallization rate related to a decrease in the crystallization temperature caused by the crosslinking of the polymer. In nonisothermal crystallization, the development of crystallites depends on the crystal sizes in the polymer.

Effects of Stabilizers in Polymer

The effect of γ-irradiation on PS without additives is negligible even when high doses are used. However, the role of antioxidants and stabilizers are decisive in PB and butadiene-containing copolymers (11). Dioctyl phthalate (DOP) and epoxy soybean oil (ESO) were added to PVC and irradiated up to 50 kGy. Mechanical properties, optical properties, and viscosity were measured and compared with nonirradiated PVC. In conclusion, DOP and ESO were shown to be effective in stabilizing the radiolytic abstraction of HCl from PVC. Both plasticizers gave good color stability and overall properties to the products (37). A breakage test on bending has shown that the PP containing a plasticizer and antioxidant improved radiation stability as compared with PP alone. Also the excellent color stability has shown in formulated PP not PP alone after irradiation treatments (38).

RELEASE OF ADDITIVES AND THEIR DEGRADATION PRODUCTS DURING IRRADIATION

Additives in Polymeric Packaging Films

Packaging has become an essential element in the food manufacturing process, and different types of additives, such as antioxidants, stabilizers, lubricants, antistatic agents, and anti-blocking agents have also been developed to improve the performance either during manufacturing or in the use of these polymeric packaging (1). In general, Commission of the European Communities (CEC) Directives introduced limits on the overall migration from plastics into food and food simulants. In addition, specific migration limits for free monomers in the final article have been set for some monomers. Currently, the limit for overall migration was set at 10 mg/dm or 60 mg/kg of a food simulant. It also includes the lists of permitted monomers together with the restrictions that apply to specific monomers (39). In the United States, the regulations include both the basic polymer resins used in food packaging and the adjuvants, which are added to a polymer in the process of manufacturing the final food package articles. Regulations frequently contain specifications for the resin, such as residual monomer content. The time, temperature, and solvent conditions for the short-term extraction tests are also referred to in the regulations (40). A large amount of research regarding the migration of volatiles, additives, monomers, and oligomers from plastic packaging materials into food were investigated.

Identification of Volatile Transformation Products After Irradiation

The volatile γ-radiolysis products of six medical polymers: PS, methyl methacrylate-acrylonitrile-butadiene-styrene (MABS), nylon, PVC, and PP, by thermal desorption (TDS)-gas chromatography (GC)-mass spectrometry (MS) after sterilizing doses of $\sim$25 kGy were identified (41, 42). The main radiolysis products of PS are acetophenone, benzaldehyde, phenol, 1-phenylethanol, and phenylacetaldehyde. The same volatiles are observed in MABS, which gives some separate aliphatic compounds. The main products of PVC and PP are fragments of additives, i.e., of stabilizers and phenol-type antioxidants, respectively. The volatile compounds produced in flexible food packaging materials, LDPE, EVA, and PET/PE/EVOH/PE, during electron-beam irradiation using the purge and trap technique and by combined GC-MS. Both primary, i.e., methyl-derivates, and so on, as well as secondary, i.e., oxidation products, ketones, aldehydes, alcohols, carboxylic acid, and so on, are produced during irradiation with doses of 5, 20, and 100 ky were isolated and identified (3). The polymer materials, PE, PP, PET, polyamide (PA), PS, and PVC were investigated after treating with an γ-radiation dose of 44 kGy. The quantitative changes in compositions of radiolysis products of each packaging material were measured. The polyolefine materials such as PE and PP showed an increase of low volatility compounds after irradiation due to an oxidative decomposition of the polymer, oligomers and additives. Other packaging materials such as PET, PA, and PS did not show a meaningfully change their amount of solvent-extractable compounds after irradiation with 44 kGy. The PVC packaging material used in this study was not resistant to irradiation treatment. Because of the release of hydrochloric acid during irradiation, a large amount of volatile substances could be extracted from the PVC sheet. Most attention should be paid to low-volatility radiolysis products, which are the most likely to migrate into a foodstuff or a pharmaceutical product (43). Volatile radiolysis products of LDPE and PP films were investigated by TDS-GC-MS after absorbed doses of up to 25 kGy. The radiation-induced compounds are mainly hydrocarbons, aldehydes, ketones, and carboxylic acids with concentrations one order of magnitude below that of the residual hydrocarbons. The radiolysis products are retained for considerable times in LDPE films, and they remained in PP films much longer than in LDPE films (42). Four volatile compounds: ε-caprolactam, 2-propyldecanol, 2-butyloctanol, and 2,3-diethyl-2,3-dimethyl-1,4-butanediol, were detected after γ-irradiation of EVOH. (31)

The Presence of Extractable Antioxidants After Irradiation

The effect of electron-beam irradiation on the migration behavior of additives present in food packaging material was studied with PP pouches that contained aqueous food simulants. The loss of some products of antioxidant degradation from the material can be correlated to the presence of these same products in the food simulants. This observation led us to assume that components of the packaging material could migrate into the aqueous food simulants (44). The chromatograms from reversed-phase (RP)–high-performance liquid chromatography (HPLC) for the extraction solutions corresponding to the PP control and those treated with γ-ray and electron beam were obtained. Two compounds were identified; the first is the antioxidant tris-(2,4-di-*tert*-butylphenyl) phosphite (Irgafos 168) and the second corresponds to its degradation product phosphate. For the lower dose of 25 kGy, irradiation induces a large decrease of phosphate levels but has little effect on the levels of phosphite. In the case of γ-ray-treated PP, the levels of phosphite antioxidant decrease as the absorbed irradiation dose increases. There were no noticeable trends in the electron-beam-treated PP. The amount of the phosphate compound is considerably lower after both radiation treatments (34). Tris-(2,4-di-*tert*-butylphenyl) phosphite (Irganox 168) and its corresponding phosphate in HDPE food trays as a function of γ-irradiation were identified and quantified. The complete degradation of phosphate to phosphate occurs at low

γ-irradiation doses, i.e., 5 kGy. Because treatment with such a low dose of γ-irradiation leads to the conversion of phosphite to mainly phosphate, the formation of phosphate during melt processing and radiation sterilization of these HDPE trays must take into account products from the irradiation of phosphate (45). Thermal desorption indicated the formation and release of 1,3-di-*tert*-butylbenzene (1,3-DTBB) during γ-irradiation of the HDPE (46). After γ-radiation of PE, PP, and PS, the contents of antioxidants significantly decreased. Irgafos 168 disappeared the fastest. 2,4-DTBP was detected not only after irradiation but also before irradiation, whereas 1,3-DTBB and 2,6-di-*tert*-butyl-p-benzoquione (2,6-DTB BQ) were detected only after irradiation (47, 48). Ninety-six percent of the initial phenolic stabilizer was undetectable after electron-beam radiation. A phosphite stabilizer and its reaction products accounted for 35% of the initial amount. The sum of all potential migrants derived from the additives accounted for less than 1% of global migration. This extensive migration was mainly caused by oligomers (49). Polyolefin polymers may undergo degradation through oxidation by air and UV light. Antioxidants are added to stabilize the polymer because they will be preferentially degraded. Hindered phenol and triphenyl phosphite as antioxidants are widely used in the polyolefin industry. Unfortunately, these compounds and their decomposed products can be released onto the foods during irradiation. Tests are still underway to determine the genetic effects, if any, of these compounds (1).

To evaluate the chemical or toxicological risk caused by irradiation, it is necessary to identify and quantify the compounds (50). The residues of antioxidants pentaerythrityl-tetra-kis[3-(3,5-di-*tert*-butyl-4-hydroxyphenyl)propionate] (Irganox 1010) and Irganox 1076 in PVC, PP, and PE were tested. Incremental increases in γ-radiation proportionally reduced the extractable levels of these compounds. Individual reductions were dictated by polymer and antioxidants type but were approximately 30% at 10 kGy (7). 2,4-DTBP and tris-(2,4-DTBP) phosphate come from Irgafos 168, and 2,6-DTBBQ comes from the Irganox 1010, after the irradiating of PP with electron beams at doses 2.5 and 10 kGy. Also, the above compounds were found in aqueous food simulants. Because the absorbed dose by food simulants could be lower than the dose absorbed by PP and the migrated compounds from PP were decomposed into unknown products, the quantities of the migrated compounds in food simulants were lower than those of compounds in PP (44, 50). A dose of $\sim$7 kGy γ-radiation in HDPE was required to drive the Irgafos 168 concentration to zero as determined by using infrared (IR) spectroscopy (45). The 2,4-DTBP was detected in the tray samples by thermal desorption, followed by GC-MS, and it may come from the storage hydrolysis of Irgafos 168 in HDPE (46). The kinetics of antioxidant migration from PP into fatty food simulants was studied via the diffusion coefficients (51).

The long-term influence of electron beam irradiation (2.5 and 10 kGy) on food packaging materials and oriented polypropylene (OPP) was studied. It was shown that a partial or complete disappearance of the antioxidants (Irganox 1010 and Irgafos 168) occurred over time and that a new compound was released as a result of antioxidant degradation (50). Effects of γ-irradiation on residual and migration levels of the antioxidants, tris-(2,4-di-*tert*-butylphenyl) phosphite (Irgafos 168), and octadecyl-3-(3,5-di-*tert*-butyl-4-hydroxyphenyl) propionate (Irganox 1076), as well as their radiolysis products, were investigated in the linear LDPE (LLDPE) packaging samples treated with doses from 0 to 200 kGy. Irgafos 168 was not detected in 5 kGy-treated samples, and the levels of Irganox 1076 decreased by 34.9% from the initial level in 10 kGy-treated samples. The radiolysis products 2,4-DTBP, 1,3-DTBB, and toluene were identified, and their concentrations gradually increased as the irradiation dose increased. Migration of Irgafos 168 from the LLDPE pouch into food simulants, distilled water, acetic acid (4 mL/100 mL distilled water), or ethanol (20 mL/100 mL distilled water) was not detected at dose levels up to 200 kGy, whereas that of the Irganox 1076 was detected in a decreasing manner with an increase in dose (52). The food packaging polymers PS, polycarbonate (PC), PA-6, and PVC, were irradiated with doses in the range of 5–200 kGy. The quantities of corresponding monomer residues (styrene monomer, bisphenol-A, ε-caprolactam, and vinyl chloride) released from target materials were analyzed using a SIM mode of GC/MSD. Styrene monomers in PS showed a slight increase from 740 to 777 ppm at 5–30 kGy and then decreased as the dose increased from 30 to 200 kGy. Bisphenol-A in PC was dose independent at the low doses of 5, 10, and 30 kGy, but its level increased from 173 to 473 ppm at 30 kGy and thereafter remained unchanged through 200 kGy. ε-Caprolactam in PA-6 was also dose independent in the range of 5–200 kGy, but its level (122–164 ppm) was found to be higher than those of nonirradiated samples (71 ppm). As for PVC, the quantity of vinyl chloride tended to increase from 8 to 18 ppm at 5–200 kGy (53).

BIBLIOGRAPHY

1. O. W. Lau, and S. K. Wong, “Contamination in Food from Packaging Material,” *J. Chromatogr. A* **882**, 255–270, (2000).
2. N. Yagoubi, A. Baillet, F. Pellrin, and D. Ferrier, “Physico-Chemical Behaviour of β Irradiated Plastic Materials Currently Used as Packagings and Medical Products,” *Nucl. Instr. and Meth. B*. **105**, 340–344, (1995).
3. K. A. Riganakos, W. D. Koller, D. A. E. Ehlermann, B. Bauer, and M. G. Kontominas, “Effect of Ionizing Radiation on Properties of Monolayer and Multiplayer Flexible Food Packaging Materials,” *Radiat. Phys. Chem.* **54**, 527–540, (1999).
4. G. O. Payne, C. J. Spiegl, and J. J. Killoran, “Packaging Aspects of Irradiation,” *Modern Packaging* April, 148–193, (1965).
5. J. J. Killoran, “Packaging of Irradiated Foods,” *Technical Engineer*. April, 179–183, (1967).
6. P. S. Elias, “Food Irradiation and Food Packaging,” *Chem. Indus*. May, 336–341, (1979).
7. G. Sadler, W. Chappas, and D. E. Pierce, “Evaluation of E-Beam, γ- and X-Ray Treatment on the Chemistry and Safety of Polymers Used with Pre-Packaged Irradiated Foods: A Review,” *Food Addit. Contam.* **18**, 475–501, (2001).

8. L. Fengmei, W. Ying, L. Xiaoguang, and Y. Baoyu, “Evaluation of Plastic Packaging Materials Used in Radiation Sterilized Medical Products and Food,” *Radiat. Phys. Chem.* **57**, 435–439, (2000).
9. L. Woo, M. T. K. Ling, S. Y. Ding, and S. P. Westphal, “Effect of Ionizing Radiation on the Thermal Oxidative Stability of Medical Polymers,” *Thermochim. Acta* **324**, 179–185, (1998).
10. M. Pentimalli, D. Capitani, A. Ferrando, D. Ferri, P. Ragni, and A. L. Segre, “Gamma Irradiation of Food Packaging Materials: An NMR Study,” *Polymer* **41**, 2871–2881, (2000).
11. M. Pentimalli, P. Ragni, G. Righini, and D. Capitani, “Polymers and Paper as Packaging Materials of Irradiated Food; An NMR Study,” *Radiat. Phys. Chem.* **57**, 385–388, (2000).
12. O. N. Chuaqui, “Food Packaging Materials and Radiation Processing of Food: A Brief Overview,” *Radiat. Phys. Chem.* **34**, 1055–1057, (1989).
13. WHO, *Wholesomeness of Irradiated Food*. Report of a Joint FAO/IAEA WHO Expert Committee, Technical Report Series No. 659, World Health Organization, Geneva, 1981.
14. International Consultative Group on Food Irradiation (ICGFI), *Facts about Food Irradiation*, Vienna, Austria, 1999.
15. WHO, *Safety and Nutritional Adequacy of Irradiated Food*. World Health Organization, Geneva, Switzerland, 1994.
16. U.S. FDA *Code of Federal Regulations*, Title 21, Part 179.45, U.S. Government Printing Office, Washington, DC, 2007.
17. R. L. Derbyshire, “The LOMO® : A Solution for Residual Monomers?” *Radiat. Phys. Chem.* **14**, 333–342, (1979).
18. J. B. Kowalski, and A. Tallentire, “Substantiation of 25 kGy as a Sterilisation Dose: A Rational Approach to Establishing Verification Dose,” *Radiat. Phys. Chem.* **54**, 55–64, (1999).
19. The Panel on Gamma & Electron Irradiation—Working Group on Microbiology, *The Use of 25kGy as a Sterilizing Dose*, London, UK, 1999, pp. 1–8.
20. R. G. McKinnon, “Safety Considerations in the Design of Gamma Irradiation Facilities and the Handling of Cobalt-60 Sources,” *Radiat. Phys. Chem.* **31**, 563–565, (1988).
21. A. Chapiro, “General Consideration of the Radiation Chemistry of Polymers,” *Nucl. Instr. and Meth. B*. **105**, 5–7, (1995).
22. D. Robbins, and T. Yang, “Radiation and Radiobiology,” in A. Nicogossian, C. Huntoon, and S. Pool, eds., *Space Physiology and Medicine*, 3rd edition, Lea & Febiger, Philadelphia, PA, 1994.
23. J. J. Killoran, “Packaging Irradiated Food,” in: *Preservation of Food by Ionizing Radiation*, E. S. Josephson and M. S. Peterson, eds., CRC Press, Boca Raton, FL, 1983.
24. C. Merritt, “*Radiolytic Products – Are They Safe?” Safety Factors Influencing the Acceptance of Food Irradiation Technology*, IAEA TECDOC-490, Vienna, Austria, 1989.
25. Y. Aoshuang, and A. Tallentire, “Radiation Sterilization—Computer Evaluation of ISO 11137 Dose Setting Method 1 and ISO/TR 13409 Method for Substantiation of 25 kGy,” *Radiat. Phys Chem.* **54**(1), 83–94, (1999).
26. K. W. Davis, W. E. Strawderman, and J. L. Whitby, “The Rationale and a Computer Evaluation of a Gamma Irradiation Sterilization Dose Determination Method for Medical Devices Using a Substerilization Incremental Dose Sterility Test Protocol,” *J. Appl. Microbiol.* **57**(1), 31–50, (1984).
27. A. B. Lugão, E. C. L. Cardoso, L. F. C. P. Lima, B. Hustzler, and S. Tokumoto, “Characterization Study of Gamma-Irradiated, High Melt-Strength Polypropylene,” *Nucl. Instr. and Meth. B*. **208**, 252–255, (2003).
28. K. Mäder, A. Domb, and H. M. Swartz, “Gamma-Sterilization-Induced Radicals in Biodegradable Drug Delivery Systems,” *Appl. Radiat. Isot.* **47**, 1669–1674, (1996).
29. B. Ravat, M. Grivet, M. Grohens, and A. Chambaudet, “Electron Irradiation of Polyesterurethane: Study of Chemical and Structure Modifications using FTIR, UV Spectroscopy and GPC,” *Radiat. Meas* **34**, 31–36, (2001).
30. D. H. Jeon, K. H. Lee, and H. J. Park, “The Effects of Irradiation on Physicochemical Characteristics of PET Packaging Film,” *Radiat. Phys. Chem.* **71**, 1059–1064, (2004).
31. Y. J. Byun, S. I. Hong, K. B. Kim, D. H. Jeon, J. M. Kim, W. S. Whiteside, and H. J. Park, “Physical and Chemical Properties of γ-Irradiated EVOH Film,” *Radiat. Phys. Chem.* **76**, 974–981, (2007).
32. M. Eken, S. Turhan, Y. Kaptan, and O. Güven, “Diffusion of Oxygen into Irradiated Polypropylene Films,” *Radit. Phys. Chem.* **46**, 809–812, (1995).
33. I. Deschênes, A. Arbour, F. Brunet, M. A. Court, G. J. Doyon, J. Fortin, and N. Rodrigue, “Irradiation of a Barrier Film: Analysis of Some Mass Transfer Aspects,” *Radiat. Phys. Chem.* **46**, 805–808, (1995).
34. N. Yagoubi, R. Peron, B. Legendre, J. L. Grossiord, and D. Ferrier, “Gamma and Electron Beam Radiation Induced Physico-Chemical Modifications of Poly(propylene),” *Nucl. Instr. and Meth. B*. **151**, 247–254, (1999).
35. J. C. M. Suarez, E. B. Mano, and R. A. Pereira, “Thermal Behavior of Gamma-Irradiated Recycled Polyethylene Blends,” *Polym. Degrad. and Stab.* **69**, 217–222, (2002).
36. B. W. Hutzler, L. D. B. Machado, A. B. Lugão, and A. -L. C. H. Villavicencio, “Properties of Irradiated PVC Plasticized with Non-Endocrine Disruptor,” *Radiat. Phys. Chem.* **57**, 381–384, (2000).
37. B. W. Hutzler, L. D. B. Machado, A. -L. C. H. Villavicencio, and A. B. Lugão, “Crystallization of Irradiated Polyethylene,” *Radiat. Phys. Chem.* **57**, 431–434, (2000).
38. A. Shamshad, and A. A. Basfar, “Radiation Resistant Polypropylene Blended with Mobilizer, Antioxidants and Nucleating Agent,” *Radiat. Phys. Chem.* **57**, 447–450, (2000).
39. Commission of the European Communities, Relating to Plastics Materials and Articles Intended to Come into Contact with Foodstuffs, Directive 90/128/EEC, Brussels, 1990.
40. U.S. FDA, *Code of Federal Regulations*, Title 21, Part 177, U.S. Government Printing Office, Washington, DC, 2007.
41. R. Buchalla, C. Boess, and K. W. Bögl, “Characterization of Volatile Radiolysis Products in Radiation-Sterilized Plastics by Thermal Desorption-Gas Chromatography-Mass Spectrometry: Screening of Six Medical Polymers,” *Radiat. Phys. Chem.* **56**, 353–367, (1999).
42. R. Buchalla, C. Boess, and K. W. Bögl, “Analysis of Volatile Radiolysis Products in Gamma-Irradiated LDPE and Polypropylene Films by Thermal Desorption-Gas Chromatography-Mass Spectrometry,” *Appl. Radiat. Isot.* **52**, 251–269, (2000).
43. P. G. Demertzis, R. Franz, and F. Welle, “The Effects of γ-Irradiation on Compositional Changes in Plastic Packaging Films,” *Packag. Technol. Sci.* **2**(3), 119–130, (1999).
44. F. Bourges, G. Bureau, and B. Pascat, “Effects of Electron Beam Irradiation on the Migration of Antioxidants and Their Degradation Products from Commercial Polypropylene into Food Simulating Liquids,” *Food Addit. Contam.* **10**, 443–452, (1993).
45. D. J. Carlsson, M. E. Krzymien, L. Deschênes, M. Mercier, and C. Vachon, “Phosphite Additives and Their Transformation

Products in Polyethylene Packaging for γ-Irradiation," *Food Addit. Contam.* **18**, 581–591, (2001).

46. M. E. Krzymien, D. J. Carlsson, L. Deschênes, and M. Mercier, "Analyses of Volatile Transformation Products from Additives in γ-Irradiated Polyethylene Packaging," *Food Addit. Contam.* **18**, 739–749, (2001).
47. Y. Kawamura, M. Miura, Y. Miura, and T. Yamada, "Effects of Gamma Irradiation on Antioxidants and Ultraviolet Stabilizers," *Food Irradiation Japan* **33**, 1–9, (1998).
48. Y. Kawamura, K. Sayama, and T. Yamada, "Effects of Gamma Irradiation on Food Contact Polyethylene, Polypropylene and Polystyrene: Additives and Other Chemicals," *Food Irradiation Japan* **35**, 7–14, (2000).
49. D. Marque, A. Feigenbaum, D. Dainelli, and A. M. Riquet, "Safety Evaluation of an Ionized Multiplayer Plastic Film Used for Vacuum Cooking and Meat Preservation," *Food Addit. Contam.* **15**, 831–841, (1998).
50. F. Bourges, G. Bureau, and B. Pascat, "Effects of Electron Beam Irradiation on Commercial Polypropylene: Kinetic Study of Antioxidant Degradation," *Packag. Technol. Sci.* **5**, 197–204, (1992).
51. J. A. Garde, R. Catala, R. Gavara, and R. J. Hernandez, "Characterizing the Migration of Antioxidants from Polypropylene into Fatty Food Simulants," *Food Addit. Contam.* **18**, 750–762, (2001).
52. D. H. Jeon, G. Y. Park, I. S. Kwak, K. H. Lee, and H. J. Park, "Antioxidants and Their Migration into Food Simulants on Irradiated LLDPE Film," *LWT* **40**, 151–156, (2007).
53. G. Y. Park, S. Y. Cho, D. H. Jeon, I. S. Kwak, K. H. Lee, and H. J. Park, "Formation of Monomer Residues in PS, PC, PA-6 and PVC upon γ-Irradiation," *Radiat. Phys. Chem.* **75**, 1055–1059, (2006).

RADIO FREQUENCY IDENTIFICATION (RFID)

William McCombie
Bruce A. Welt
Packaging Science Program,
Agricultural and Biological
Engineering Department,
University of Florida/IFAS,
Gainesville, Florida

INTRODUCTION

Radio-frequency identification (RFID) is a method for automatic identification that relies on storing and retrieving data from transponder "tags." RFID systems require readers equipped with one or more antennas connected to back-end computer systems. Tags are equipped with power generation and regulation, control circuitry, data memory, and communications capability. Readers activate tags to initiate data transfer via radio signals. Proponents expect RFID technology to replace conventional barcode technologies. To date, RFID has been evaluated and implemented in a number of applications including supply chain tracking, animal identification, and toll collection. Opponents to RFID suggest that the technology does, however, have some drawbacks, including cost of implementation, reliability, performance, and potential for privacy misuse issues.

HISTORY

RFID has roots in several technologies. One such technology dates back to World War II, when Great Britain implemented a system known as "Identity Friend or Foe" to identify incoming planes as either friendly or enemy. A ground transmitter would send a signal to a plane, and a transponder on the plane would respond with an encrypted message indicating whether the plane was friendly. Modern RFID works on the same basic principle.

The first patent for a passive RFID-type system was filed in 1970 (U.S. Patent 3,713,148). The term RFID was first used in U.S. Patent 4,384,288 entitled, "Portable radio frequency emitting identifier." Since then and particularly within the last decade, many RFID-related patents have been issued. Significant patent holding companies include Internic, Motorola, Alien Technology, and IBM. Modern technology has been able to produce microchips with RFID capability, allowing RFID to be used in many applications at relatively low cost. However, the question remains as to whether the costs are or will be low enough to replace barcodes.

Proponents of RFID technology envision a future in which any object can be wirelessly tracked. One vision involves the smart, automated supermarket. This vision has customers exiting supermarkets without stopping at the cashier. Instead, embedded RFID tags in merchandise packaging would automatically interface with readers located on the shelves and at the exit of the store. Payments would be processed with RFID-enabled payment cards. Simultaneously, "smart shelves" would detect those items removed for purchase to provide real-time inventory reporting allowing optimal logistics and supply, merchandizing, and therefore optimizing sales while and minimizing out-of-stock items.

This vision continues into the home. Purchased groceries would interface with smart appliances. A smart refrigerator would alert consumers to expired or finished merchandise and order new products as required in accordance with consumer defined rules. Smart ovens would properly cook foods by retrieving detailed cooking instructions tags embedded in packaging. Such devices have already been developed in numerous academic and corporate laboratories. One such device, already developed by Samsung, uses 2D barcodes printed on product packaging rather than RFID tags (1). Finally, when packages are disposed of or recycled, tags might be used to facilitate automated sorting in order to route materials for optimal recycling, energy conversion, or disposal.

Such technologies are in developmental stages today. The Metro Extra Future Store in Rheinberg, Germany performed an experiment with RFID in which certain items in the store were individually tagged. Several items were placed on "smart shelves," which detect removed items and signal back-end systems to request more stock. Some items had tags attached to the packaging, while

Table 1. Summary of RFID Technologies

Method	Company	Description	Progress
Fluidic self-assembly	Alien Technology	Chips are attached by flowing in a special fluid over holes shaped to catch the chips.	Alien claims that prices will continue to drop as FSA production increases.
PICA (parallel integrated chip assembly)	Symbol Technologies	Attaches RFID chips to inlays (antennas) in parallel.	Expected to be online in 2006; however, this is not the case.
Conventional methods	Various companies	Tags are manufactured by attaching each chip to each antenna individually.	

other items, such as Gillette razors, had tags embedded at the factory.

Digital video disks (DVDs) stocked by the store also contained RFID tags and were used in conjunction with interactive kiosks, allowing shoppers to watch movie previews. The store also embedded RFID tags in its customer loyalty cards, but this was later discontinued after privacy advocates protested the practice (2).

Currently, RFID tags cost as low as about 7¢ per tag when purchased in multimillion unit quantities. Manufacturing costs continue to be relatively high as manufacturing processes are improved and scaled. However, failure rates of RFID tags continue to be unsustainably high. Defective tag rates, postapplication tag failure rates, and overall tag longevity are not well known as manufacturers are reluctant to share such data. However, experience with various tag types suggest defective rates in the range of 30% and postapplication failure rates in the 5–20% range within one year of application. Rigorous, third-party studies are needed to more fully understand RFID tag failure modes and rates.

Alien Technology and Symbol Technologies (now Motorola) are both attempting to reduce this cost with Fluidic Self-Assembly (FSA) and Parallel Integrated Chip Assembly (PICA), respectively (3, 4). Table 1 summarizes these technologies.

INDUSTRY STANDARDS FOR AUTOMATIC IDENTIFICATION

Barcodes

Barcodes have been around for many years, and there are many standards. One of the most common in the United States is the Universal Product Code, which retailers use to identify merchandise. Other standards exist, many of them proprietary. Most barcodes, however, do not uniquely identify an item, but rather an item type (e.g. “case of super-widgets” versus “this case is the 82nd case of widgets.”)

UID

Universal Identification is a method used by the United States Department of Defense (DOD) to identify assets (5). DOD describes its needs for unique identification capabilities as follows (6):

> The Department must, of necessity, uniquely identify the items to which it takes title to provide for better asset accountability, valuation and life cycle management. Unique identification provides the Department the opportunity to differentiate an individual item from all others. Unique identification of items provides the Department with the source data to facilitate accomplishment of the following:
>
> - Improve the acquisition of equipment- and performance-based logistics services for the warfighter,
> - Capture timely, accurate, and reliable data on items (i.e., equipment, reparables, materials, and consumables),
> - Improve life-cycle asset management.
> - Track items in the department and industry systems for operational, logistic, and financial accountability purposes.

While DoD’s UID mandate requires physical marking of all items with a unique code, RFID is being used as a means to transfer UID information. UID is primarily implemented using two-dimensional “DataMatrix” style barcodes.

EPC Global

The Electronic Product Code (EPC) is a set of standards initiated by the Massachusetts Institute of Technology (MIT) Auto ID Labs and eventually overseen by EPC Global Inc. The EPC protocols intend to ensure that all tags, RFID or otherwise, are coded with unique values. EPC Global defines a set of standards for hardware, software, and the codes themselves. An EPC can contain a preexisting standard, such as Global Trade Identification Number (GTIN), Serial Shipping Container Code (SSCC), Global Location Number (GLN), Global Returnable Asset Identifier (GRAI), or Global Individual Asset Identifier (GIAI), and provides specifications for implementing such codes within an EPC (7).

The EPC standard dictates how data should be stored on tags, in addition to translating codes from one format to another. An example of how UPC/GTIN is implemented as a unique and serialized EPC SGTIN code follows.

Global Trade Identification Number (GTIN) is one method of identifying objects with an automated data capture system. GTIN, like UPC, does not, however, uniquely identify items. The EPC system includes a serialized GTIN, known as Serialized Global Trade

Table 2. Example of SGTIN-96 Encoding

Field	Header	Filter	Partition	Company	Item	Serial
Number of bits	8	3	3	20-40 (dependant on partition size)	24-4 (dependant on partition size)	38
Description	Set to 0×30 to indicate SGTIN-96 encoding	Determines the type of item, such as a pallet, carton, or item	Determines the size of the company and Item fields	Identifies the company that produced the item	Identifies the item the tag is attached to, such as a box of detergent	Serial number to uniquely identify a product (i.e., which box of detergent)

Identification Number. The code includes a header (used to identify the encoding to the reader, whether it is SGTIN or another standard, and the size of the tag in bits); a filter to separate loads by pallet, case, or item; a company identification number; a product identification number, and a serial number. This information can be used to query a database to find out more information about tagged items. The 64- and 96-bit EPC compliant tags are currently available; however, 64-bit tags are being phased out. Table 2 shows an example of SGTIN-96 encoding.

It is worth noting that although EPC was developed to be used with RIFD, industry is realizing that serialized codes can also be implemented with other identification methods, including barcodes.

Hardware. EPC Global standards define operational characteristics for hardware, including frequency and wireless communication protocols. These standards provide for common communications methods and interfaces that allow components from different companies to work together.

Software. RFID middleware is software used to interface between RFID readers and other components, including user interfaces, databases, and other applications. The main purpose of middleware is to simplify interfacing back end systems with new RFID hardware. As RFID gains acceptance, RFID software and backend systems are being developed to more easily integrate, thus putting into question the long-term need for middleware applications. There are several commercial and open source packages available on the market, including solutions from Microsoft, Inc., ConnecTerra, Inc. (now BEA Systems, Inc.), GlobeRanger, Inc., IBM, Inc., and Sun Microsystems, Inc.

Middleware packages are capable of interfacing directly with RFID devices and can translate information from the reader(s) into formats that can be used by other applications. An EPC Global encoded tag, for example, can be broken down into specific values for company, item, and serial number, while the middleware performs one action for carton tags and another for pallet tags. Another advantage of using middleware is compatibility with different brands and models of RFID readers.

It is worth noting that middleware is not necessarily limited to RFID technology. Most packages are compatible with conventional barcode systems and other systems as well.

RFID devices are being offered with increasing levels of middleware functionality built in. These are capable of doing basic middleware operations without the need for additional software. Alternatively, for some applications, such as those where only a single reader is used, custom software can be written to interpret tag information.

APPLICATIONS

One of the largest applications of RFID is supply chain management. This industry has used conventional barcodes for years with great success. RFID initiated serialization offers potential to greatly enhance supply chain visibility and enables suppliers and retailers to track goods from the point of manufacture to the store shelf and beyond.

The lowest level of RFID tracking is known as “item level” tagging and consists of placing RFID tags on individual items, in a manner similar to UPC labels on most grocery products. Item level tagging has been tested and implemented in several retail environments, such as at Wal-Mart stores and Metro Group’s *Extra Future Store* initiative in Germany. Most modern implementations, however, have been limited to case and pallet levels. Wal-Mart is one of the largest backers of the technology and has put it to use to in an effort to improve supply chain efficiency, reduce labor costs, and reduce shelf out-of-stocks, apparently resulting in increased sales (8, 9). Electronics retailer Best Buy Co. Inc. (Richfield, Minnesota) also experimented with item level RFID on DVDs and video games. The initial trial was linked to increased DVD sales due to reductions in out-of-stock merchandise (10).

The supply chain is not the only place where RFID has been implemented. Toll booths have used RFID to automatically collect tolls using transponders carried by motorists. Examples include SunPass (a toll collection system used in Florida) and EZ-Pass (a toll collection system used in the northeastern United States).

A primitive form of RFID is Electronic Article Surveillance (EAS). A major supplier of EAS systems is Tyco, Inc.’s (Pembroke, Bermuda) ADT Division (formerly Sensormatic of Boca Raton, FL). Instead of using a chip to store information, EAS tags use simple tuned circuits that respond to particular radio frequencies. Such systems are commonly used in retail stores to deter shoplifting, and they are also used in libraries to prevent removal of articles that have not been checked out. Such tags are either removed or deactivated at check-out to prevent

Figure 1. Checkpoint EAS antennas use special one-bit tags to detect unauthorized removal of products from premises.

them from triggering alarms when removed from the premises. Figure 1 shows Checkpoint Systems Inc. (Thorofare, NJ) EAS antennas at the entrance to the University of Florida bookstore. Upon removing an unpaid item (or an item that has not been deactivated properly), such as a textbook, an alarm will sound, alerting store staff. Checkpoint also manufacturers EPCGlobal compatible RFID products and produces a line of EAS devices that may be upgraded for use with RFID systems. Other applications of RFID include ExxonMobil's (Irving, Texas) SpeedPass, first used in 1997. It was a system that allowed cashless payments at Mobil/Exxon fueling stations, and also at McDonald's fast food restaurants with a simple keychain attachment (11).

Credit card manufacturers have also recently started embedding RFID chips within credit cards for cashless payments, and many cities have used RFID for transport payments. Examples include Visa's *payWave*, MasterCard's *PayPass,* and American Express's *ExpressPay.*

Animal tracking is another application of RFID. Domesticated pets and livestock can be injected with a subdermal RFID chip, improving herd management and allowing lost animals to be identified.

TYPES OF RFID

Passive RFID

Passive RFID is a type of RFID tagging in which tags are not self-powered. Passive tags are designed to harvest power from radio signals transmitted by an RFID reader at a particular frequency. When within the electromagnetic field emitted by the reader, passive tags activate and respond as required to interrogation. The two most common passive technologies involve high-frequency (HF) and ultra-high-frequency (UHF) energy. The HF mode uses the magnetic component of the field and has a very short read range. HF tags typically need to be within a few centimeters of a reader. UHF tags offer greater read ranges that are typically on the order of a 2–10 ft. UHF tags are more common for supply chain applications, whereas HF tags are finding greater use in asset management and other applications that require more intimate proximity between reader and tag (e.g., hospital patient bracelets for drug distribution). UHF tags communicate using the principle of backscatter radiation. Essentially, the tag reflects a portion of reader's energy back to the reader with a superimposed modulated signal (12). Tag performance depends upon antenna size and geometry.

Tag size is mainly due to the antenna. Larger antennas tend to provide longer read ranges. Current technology has enabled tags to be embedded in paper or under the skin. Hitachi's μChip, for example, is 7.5 μm thick (13). Passive RFID tags have been used for tracking pallets of goods, contactless "smart cards," and machine readable passports. Figure 2 shows some passive RFID tags.

Active RFID

Active RFID involves tags with an internal power source, such as a battery. One common application of active RFID technology is electronic toll collection. Active RFID tags may also be paired with one or more different types of sensors, such as temperature sensors. Toll collection devices may include some form of feedback, alerting the user when a toll is collected. Active RFID tags are much more expensive than passive RFID tags and are typically in the $5 to $100 range. Figure 3 shows an active RFID sensor developed at the University of Florida to assist in monitoring food freshness (14).

Semiactive/Semipassive

Semiactive/semipassive RFID tags, like active tags, also contain a power supply, but this power supply is only used to power the circuitry. The radio signal is transmitted using power from the incoming radio signal. Semiactive/semipassive RFID technology is being developed primarily for "smart" reusable containers and pallets.

Frequencies

Many RFID systems can interface with tags from other systems if the frequencies and protocols are the same. There are some standards to frequencies, and lower-frequency tags are generally less expensive but have a shorter range (Table 3) (15).

ADVANTAGES AND DISADVANTAGES OF RFID

Advantages

Unlike barcodes, which require a line of sight between reader and barcode, RFID tags interface with readers using radio signals. RFID chips are tiny while storing hundreds or thousands of bits of information, which allows tags to be hidden from view. By comparison, barcodes require clearly visible area on items or packaging, and this area requirement generally increases with the amount of data stored.

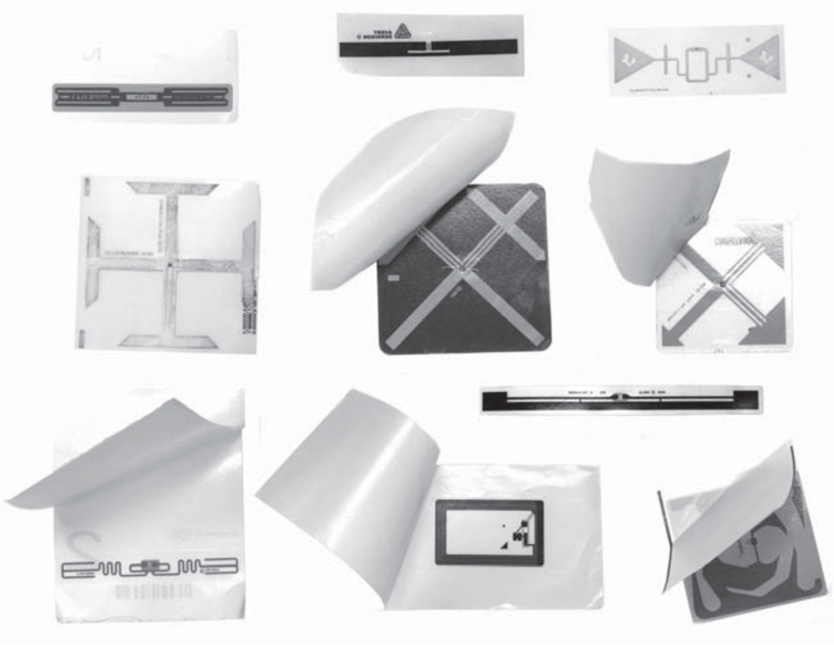

Figure 2. Assorted passive UHF RFID tags.

Data collection rate is the primary advantage of RFID. Since barcodes require line-of-sight for data collection, barcode read rates depend upon rates at which barcodes can be presented to readers. RFID tags communicate without line of sight and at high frequency allowing tens or hundreds of tags to be read each second. However, this inherent advantage of RFID is mitigated by the rates at which items such as containers, pallets, cases and items can be physically moved through the supply chain. Since barcode readers are capable of reading data on items at the highest speeds attainable within the supply chain, this RFID advantage may not be fully exploitable.

Figure 3. Active RFID freshness monitoring tag developed at the University of Florida.

Another advantage of RFID is that it helped to introduced standards and serialization to industry. With conventional UPC/EAN barcodes, each package of an item contains an identical product code. They identify only the manufacturer and the product type. A serialized RFID tag, on the other hand, contains a serial number, allowing a reader to determine which package of a product is being scanned. This information can be queried into a database to determine the source, expiration date, and other useful information about a particular item.

Disadvantages

Data Transmission. In theory, radio signals can be read without direct line of sight between tags and readers. In practice, however, something close to line of sight is often necessary due to dielectric properties of tagged items. Many products are good absorbers of electromagnetic energy used for RFID, which interferes with low power RFID transmissions. Additionally, many products contain metals or metal packaging. Metals shield, scatter, and reflect radio signals, resulting in unpredictable RFID performance. Therefore, maximum, or at least predictable, RFID performance is often obtained when the least material is placed between tag and reader, practically negating the purported “no line of sight” benefit.

Reliability. As with any electronic device, RFID tags have a tendency to fail. Most passive RFID tags consist of an integrated circuit connected to an antenna. Should the chip, antenna, or the connection between the chip and

Table 3.

Technology	Frequencies	Read Range (Approximate)	Characteristics	Applications
Low frequency	<135 KHz	<1 ft	Coiled antennas Can work around fluids and metals	Animal identification Automation Access control
High frequency	13.56 MHz	>3 ft	Common around the world Poor performance around metals	Payment and loyalty cards Access control Item level tracking People identification
Ultra-high frequency	433 MHz 860 MHz-930 MHz (depending on region)	>10 ft 100's of feet for some active systems	Interference from liquids and metals	Supply chain
Microwave	2.45 GHz, 5.8 GHz	Similar to UHF	Fast data transfer rates.	Access control
			May be active or passive	Toll collection Industrial automation

antenna become damaged, the tag will no longer function properly. Unlike barcodes, RFID tags are more dependent on the environment. One problem facing RFID implementation is difficulty reading tags attached to metals or liquid containers.

Additionally, some consumers have devised methods to detect and 'kill' RFID tags. One such example is the RFID Zapper, created using an off-the-shelf single-use camera and a coil of wire. The device uses the capacitor in the camera (normally used to power the flash) to pass a high voltage through the coil, overpowering the RFID tag and causing the circuit to overload (16). RFID tags can also be disabled by placing them in a microwave oven; however, this can be dangerous and can cause damage to the tagged item and the microwave oven as well as the RFID tag (17). In either case, the impact of disabled tags on supply chain peformance remains unmeasured.

Cost. RFID tags are extremely costly in comparison to barcodes, even at the industry's current target rate of 5 cents per RFID tag. In addition to direct costs, RFID tags cannot be produced in the field. Therefore, commitment to RFID technology requires a related commitment to actively managed RFID tag inventory. Unexpected shortages of tags could seriously disrupt operations. Alternatively, barcodes may be printed as required on virtually any substrate using a variety of well-established printing or marking techniques. By comparison, barcodes are 100 to 1000 times less expensive than RFID tags that contain similar data.

Disposable tags are not the only investment in implementation. RFID implementation requires RFID-enabled label printers, readers, and antennas, software, middleware, computers, and network infrastructure that are compatible with a particular generation of RFID tags. Currently, the switch to "Generation 2" tags quickly rendered first generation technology obsolete. It is likely that improvements in RFID technologies will result in required costly hardware upgrades that were similar to other computer networking products. Recall networking technology migrating from 1200 bps telephone modems to 56k modems to ISDN, T1, ADSL, and so on. While costly upgrades in networking technologies were quickly offset by productivity increases and new revenue generating opportunities, such immediate and apparent rewards are probably not awaiting capital expenditures for upgraded RFID hardware for basic supply chain management functionality.

Consumers

Privacy and Security. One obstacle in deploying RFID is consumer privacy. Advocacy organizations, such as Consumers Against Supermarket Privacy Invasion and Numbering (CASPIAN) and FoeBud, a German group of RFID and privacy activists, strongly oppose item level tracking, since these technologies may allow for undisclosed wireless customer tracking. One controversial example involves a system that collects photos of customers as products are removed from shelves (18). While the system was promoted as a means to reduce shoplifting, consumer advocacy groups fear that such technologies violate consumer rights.

While some retailers, including the Metro Extra Future Store, claim that RFID tags are useless once they leave the store, privacy advocates claim that the tags are still "live" and can be tracked by other readers beyond the store of purchase.

Opponents envision a "1984"-type society in which all people and objects are tracked using microchips embedded under the skin. In fact, such systems are now widely used for pets (19). The VeriChip or VeriPay (20) is a type of RFID chip that is designed to be implanted under the skin. While it may only contain a 16-digit serial number, this information is linked to a database and can also be picked up by any compatible reader. One such use of the VeriChip is at the Baja Beach Club, in Barcelona, Spain, which experimented with implanting chips in people to allow them to pay for drinks and obtain VIP benefits without the need to carry a wallet. Human-implantable chips have also been used in medical settings for patient identification, though they are not without health and privacy risks of their own (21). Religious groups have even linked such chips to the book of Revelation, which apparently describes a time in which people are required to take a mark in order to buy or sell (17).

Disposal. A significant, yet little publicized, challenge facing RFID is the issue of disposal. Passive RFID tags have been designed to be discarded, and electronic waste is a growing problem in the United States (21). RFID tagging may contribute to the problem because RFID tags are fabricated in ways that make them difficult to recycle; and because they are designed to be attached to or part of other items, RFID tags interfere with established recycling technologies. One study on the impact of RFID tags on corrugated recycling found that (1) laminated copper antennas do not readily break down and are removed early in the pulping process as a nonrecyclable solid waste and (2) conductive silver inks used as an alternative to copper on nonlaminated labels remain with paper substrates and are not easily extractable from finished paper (22).

Interference and Spurious Reads. As with any radio-frequency device, RFID systems are susceptible to electromagnetic interference. Interference may interrupt, obstruct, or degrade performance of RFID systems. There are many sources of interference, particularly in industrial settings. The Packaging Science Laboratory at the University of Florida has relied upon a hand-held spectrum analyzer to identify and mitigate potential sources of interference (Figure 4).

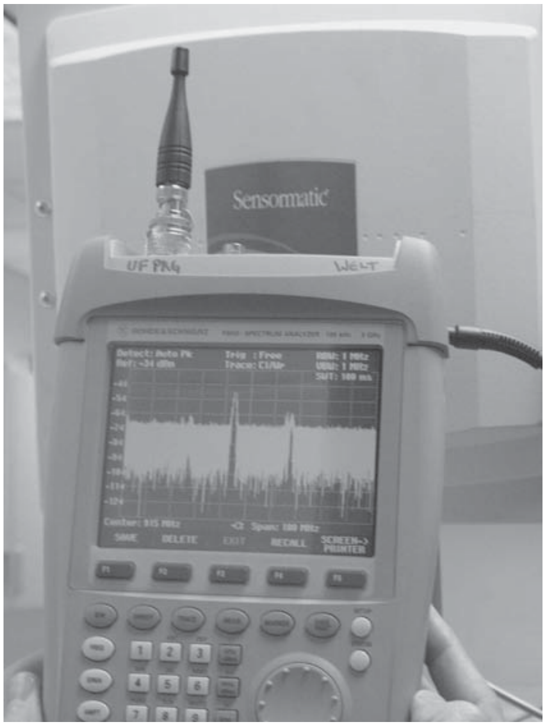

Figure 4. Handheld spectrum analyzer at the University of Florida Packaging Lab.

Figure 5. RFID tag that fell from palletized product. (Photo by Bruce Welt, University of Florida.)

The EPC Global RFID air operating protocol requires that complying RFID reader manufacturers use frequency hopping spread spectrum (FHSS) to mitigate electromagnetic interference issues (23).

RFID systems are also quite susceptible to spurious reads. Spurious reads involve reading tags that are not intended to be read. Spurious read may occur for many reasons including tags that become separated from packaging. Figure 5 shows an example of a tag that may interfere with normal RFID operation.

Spurious reads are a particular problem in multireader environments. Also, manual handling of tagged items in reader environments can also be problematic because items might be carried through read zones in directions opposite to expected flow. Spurious reads could also be a serious problem in automatic checkout and payment applications in retail outlets, where items from one customer's cart are charged to another customer.

IMPLEMENTATION OF RFID IN THE INDUSTRY

Mandates by Companies

Wal-Mart. Wal-Mart, Inc. made a big push into RFID primarily as a way to reduce labor costs and occurrences of out-of-stock merchandise. In 2003, Wal-Mart announced that it would require its top 100 suppliers to use ultra-high-frequency RFID tags conforming to EPC Global standards on pallets and cases destined to specific distribution test centers by January 2005. Additionally, Wal-Mart insisted that no price increases to cover RFID investments would be tolerated. This requirement was later eased to 65% of pallets and cartons due to issues with reading tags on metal and liquid (15). Wal-Mart then extended the requirement to other suppliers, expecting all suppliers to use RFID by December 2006.

Wal-Mart RFID specifications stated an expectation to be able to read 100% of *pallet* tags in the pallet/portal configuration and 100% of *case* tags for cases in any orientation moving at up to 600 ft/min on conveyor equipment (24). These specifications led to considerable anxiety, confusion, and capital expenditure as companies scrambled to acquire limited quantities of first-generation RFID hardware. Additionally, RFID testing laboratories began to sprout all over the United States where work focused on equipment performance comparisons, tag read rates, tag placement on cases and pallets, read ranges, product interference issues, and so on (12). Of particular note is the amount of work devoted to improving read rates of palletized cases moving through RFID portals even though Wal-Mart's specifications did not require case tags to be read in this configuration (25, 26). The practical result of this work, however, was the realization that line-of-site was practically necessary in order to be sure that the pallet tags and case tags could be read as required.

Wal-Mart and RFID proponents generally supported use of nonproprietary, EPC Global standards in order to allow the industry to quickly grow to a necessary critical mass to ensure survival. Several years of effort went into development of "Generation 2" technology, which eliminated issues related to incompatible tags and equipment. Ultimately, Generation 2 technology was to be freely available to all participants. However, once these standards were ratified, Intermec, Inc. (Everett, Washington) caused a stir by indicating that its intention to make its patents available did not mean that they would be available without cost. Intermec's RFID patent portfolio currently covers critical aspects of RFID as ratified in the Generation 2 standard. To avoid prolonged legal wrangling, Intermec devised an apparently effective plan to properly reward its shareholders while allowing the RFID industry to move forward. Its plan involved offering access to its complete patent portfolio under a preferred royalty plan, but only for a limited time of 90 days. Companies that did not sign up within the 90-day period would be required to negotiate terms on a patent-by-patent basis as well as face patent infringement actions. Intermec's plan was apparently successful; and even archrival and sole holdout, Symbol Technologies, Inc. (now part of Motorola), ultimately acquiesced and arrived at an agreement with Intermec, albeit after the 90-day window closed.

US DoD. The United States Department of Defense (DoD) has a large number of assets; and at any time, many of these assets are in transit. The DoD needed a way to track these assets. It assigned each asset with a Unique Identifier (UID), and uses RFID to read UID values from objects. It mandated all shipments to be equipped with RFID tags (5, 7). The DoD uses standard EPCglobal compliant tags. As with other RFID applications, adoption has been slow, but the DoD attributes this to its necessary focus on current intensive military operations (27).

ALTERNATIVES TO RFID

RFID has provided industry with two potentially valuable advances. First, RFID made code serialization feasible and accessible. By serializing identification codes, each tagged item can be independently tracked through the supply chain. This realization has helped to create new opportunities for improving supply chain logistics. Second, RFID brought people and companies together to create standards and operating procedures that provide for more efficient data transfer and collaboration.

While RFID might be credited for helping to bring these advances, the cruel irony is that many are starting to realize that all of the benefits from these advances may be realized without RFID. Ultimately, RFID is simply a means to collect data via radio waves. Other well-established technologies are also available that are useful for collecting data, and these may be simpler and cheaper to implement than RFID. Barcodes and image processing are two promising alternative methods for collecting data. Technological advances in electronics have been increasing the power, speed, and capabilities of barcode and image processing systems while reducing costs.

Chipless RFID

Chipless RFID is a recent innovation that combines RFID and barcodes. Unlike conventional RFID tags, chipless RFID does not rely on a central integrated circuit to transmit and receive information and instead uses a series of chemicals, each tuned to resonate at a certain frequency when excited by incoming radio waves. Each chemical represents a bit, with a chemical's presence representing a 1 and its absence representing a 0. Such a system can be printed relatively inexpensively onto an item, similar to how barcodes are printed. The developers of such a technology intend for chipless RFID to assist in anti-counterfeiting and anti-copying measures (28). Unlike conventional RFID, however, chipless RFID does not provide features commonly found on RFID chips, such as error and interference detection and avoidance.

1D Barcodes

Barcodes were invented shortly after World War II in response to a need to manage grocery inventory. In September 1969 the Grocery Manufacturers of America (GMA) and the National Association of Food Chains met to express a need for an "inter-industry product code." The effort of an ad hoc committee resulted in an 11-digit code now commonly known as the Universal Product Code (UPC) (Figure 6). After considerable time and development, on June 6, 1974 a pack of Wrigley's gum was checked out of Marsh's Supermarket in Troy, OH using a barcode scanner developed by NCR, formerly National Cash Register Company (29, 30).

1 23456 78901 2

Figure 6. UPC barcode example for (123456789012).

While UPC barcodes served the grocery industry well, other code standards were developed for other industries. Today there are barcode standards that can include numbers, letters, and the special characters that make up the complete ASCII character set. Table 4 summarizes these barcode standards. The UPC code standard has been widely adopted throughout the world as a slightly modified barcode known as European Article Numbering (EAN). The 11-digit UPC code actually presents 12 digits because the last digit serves as a checksum digit to ensure reading accuracy. The EAN-13 symbology is a superset of the UPC symbology and contains 13 digits in order to accommodate country identification codes, which are required in Europe and other parts of the world. The UPC and EAN contain a string of numbers indicating the source or company associated with the item as well as a code identifying the item type. The UPC, however, does not store a serial number, which means that each chocolate bar has an identical UPC.

UPC/EAN codes can also be represented as Global Trade Identification (GTIN) numbers, which is the current basis for identifying goods in transit throughout the world. RFID added unique serial numbers to GTIN, which are now known as serialized global identification numbers (S-GTIN). The EPC Global, Inc. electronic product code (EPC) is a superset of S-GTIN and contains additional information about the nature of the particular type of RFID tag that is used, which are not needed for non-radio-based systems. The important question at this time is whether RFID is the appropriate technology to carry serialization forward.

The main problem with adding serial numbers to linear barcodes is that they require significant amounts of printing area, which most companies would rather devote to informational or promotional content. One promising technology that is squeezing more data into smaller areas was originally known as reduced space symbology (RSS). RSS is actually a family of symbologies, each developed for some marketplace efficiency such as speed, size, or readability. The name "RSS" created confusion due to another unrelated technology for syndicating web content ("really simple syndication"), which was also known as RSS. Therefore, the term RSS is being rebranded as GS1 Databar™ (31). Currently, a GS1 Databar version of the UPC code requires about 1/3 of the area currently consumed by the UPC/EAN barcode (32). This provides ample opportunity to include serialization and/or other useful data in the future. GS1 Databar will likely prove to be a serious challenger to RFID technology in the near future as GS1 Databar technology is scheduled to sunrise in 2010 (Figure 7).

OCR

Optical Character Recognition (OCR) is a technology in which a computer or machine is used to read standard text. Such technology is in use by postal services, for example, to read address labels and direct mail to correct destinations. A variation, Magnetic Ink Character Recognition (MICR), is commonly used by banks and retailers to process checks. Figure 8 shows human readable version of EPC data being captured by a Cognex, Inc. vision system. Figure 9 shows both the 2D barcode and human-readable text being interpreted by the camera software.

OCR algorithms are not currently as robust as barcode readers at this time; however, technological improvements in hardware and software along with cost reductions will likely open opportunities for human-readable data in the future.

2D Barcodes

Two-dimensional barcodes are a relatively new technology that store more data than conventional linear barcodes. While they carry the same advantages and disadvantages of linear barcodes, the ability to store more data makes it more practical to store information such as a serial number. 2D barcodes have been used by UPS for package tracking, by state governments for Driver Licenses/ID cards, and by NASA for part identification.

One of the most common 2D barcode standards is DataMatrix (Figure 10). It is designed such that it can be printed or engraved on objects as small as the head of a pin (5) or as large as several feet across. The symbols themselves can hold up to 2335 alphanumeric characters, and they include error detection and correction algorithms that produce a valid read even if a significant portion of the symbol is damaged or absent. DataMatrix codes, like RFID, can be used to store serialized EPC and UID codes. Figure 11 shows a 2D barcode with some damage. Even though some data are missing, some or all of the data can still be read.

Figure 12 shows 2D barcode information used to store digital sound data on a roll of movie film in two different formats.

Another advantage of tracking using 2D barcodes is backward compatibility. 2D barcode equipment can print and read linear barcodes without the need for additional hardware.

PRACTICAL TESTING AND IMPLEMENTATION

Universal tracking of items in rapidly moving supply chains requires robust systems. To successfully implement such systems, testing is required to understand basic performance characteristics, weaknesses, and limitations. Such evaluations can be extensive, complex, and tedious.

RFID Hardware

A simple RFID system consists of a tag, a reader, and an antenna. The reader transmits and receives signals to and from the tag through the antenna.

RFID Printer. While RFID tags can be programmed at the factory or by readers, it may be desirable to program RFID tags using a specially designed label printer. Such printers print onto labels with embedded RFID tags. The printer contains an RFID device that programs tags as labels are printed. This method allows easy mass encoding of RFID tags. Currently, however, encoding RFID tags while printing tags significantly slows the printing process.

Table 4. Summary of Barcode Standards

Standard	Description	Applications	Sample
Plessey	Two bar widths with white space, easy to print using dot-matrix printers. Does not include built-in error checking.	Libraries, some retailers	
UPC	Robust barcode algorithm for retail use. Stores numbers only with manufacturer and product. Last digit is used as a check digit.	Retail in the United States	1 23456 78901 2
Codabar	Capable of being printed with dot-matrix printers. Self checking. Stores numbers and can store some letters.	Libraries, air-bills, blood banks.	12345678901
Code 39	Compatible with many readers; however, data density is low. Contains alphanumeric characters and some symbols.		0123456789ABCDEF
Code 93	Higher density and more robust than Code 39. Two check characters.	Canadian Post Office	0123456789ABCDEF
Code 128	High density, can store any character.	Shipping and packaging industries	0123456789ABCDEF
EAN-13	Superset of UPC symbology with additional country code.	Worldwide retail	0 123456 789012
GS1-128 (UCC/ EAN-128)	Implementation of Code 128 used for storing various types of data such as a Global Trade Item Numbers or an Expiration Date.		(00) 1 0123456 789123456 7
GS1 DataBar (RSS)	Can encode 14-digit GTIN values. Smaller than conventional UPC/ EAN barcodes.	Healthcare industry, intended for retail	(01) 0 0123456 78901 2

(*Continued*)

Table 4. Continued

Standard	Description	Applications	Sample
POSTNET	Encodes a Zip+4 code and optionally a delivery point. To be replaced by OneCode.	US Postal Service	
OneCode	Intended to replace POSTNET and PLANET symbologies.	US Postal Service	
MSI	Based on Plessey. Store numeric characters.	Inventory control	12345678901
Telepen	Encodes 128 ASCII characters without the need to use “shift” characters.	Libraries	12345678901
Interleaved 2 of 5			012345678901

Companies will need to plan accordingly for slower printing speeds. Figure 13 shows a DataMax I-Series RFID-enabled printer used in the University of Florida Packaging Lab.

Portal. A portal is an RFID “gate” located at a dock or a doorway. It usually has several antennas designed to read tags on items passing through it. A pellet load often contains tens to hundreds of cases, and each case often holds tens of items. Entire pallet loads move through portals. Wal-Mart requests that only one pallet tag, representing the entire pallet, is expected to be read from the portal. Figure 14 shows a typical RFID portal, set up in the University of Florida Packaging Lab.

Conveyor. In the supply chain, individual cases and shippers often move on conveyor systems. The conveyor can be equipped with RFID antennas to detect cases. Figure 15 shows a conveyor belt configuration in the University of Florida Packaging Lab.

Forklift/Mobile Reader. An alternative to the RFID portal is an RFID enabled forklift. The RFID forklift is equipped with a reader that records EPCs for pallets carried (33). RFID enabled forklifts may also need tags located at fixed positions on floors, posts, walls, doorways, and/or shelving in order to relate pallets to locations.

(01) 0 0123456 78901 2

Figure 7. Databar-14.

Handheld Devices. Handheld devices, such as PDAs (Portable Digital Assistants) and PDTs (Portable Data Terminals), are commonly used in retail environments to locate goods, set planograms (merchandise presentation schematics), and stock merchandise. Many are equipped with barcode scanners and wireless communication with a central server, although some newer devices, such as the device pictured in Figure 16, are equipped with RFID capability.

Testing Apparatus. A typical testing apparatus would consist of a conveyor belt, RFID hardware, machine vision hardware, and a method of capturing and logging the data, usually with a standard PC.

Figure 8. Cognex InSight camera reading a label. (Photo by Bruce Welt, University of Florida.)

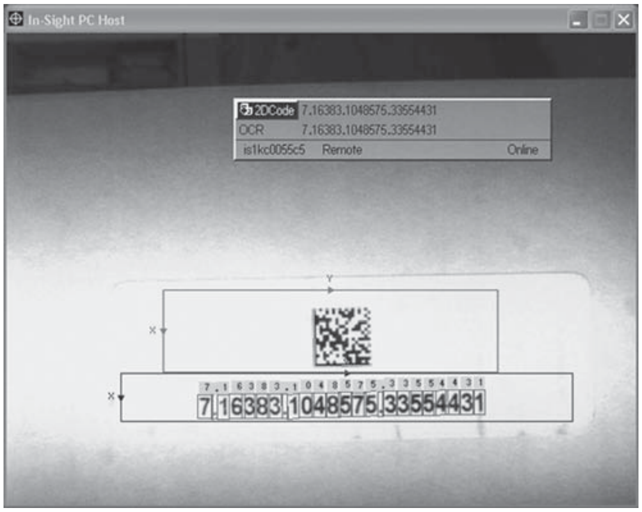

2DCode 7.16383.1048575.33554431
OCR 7.16383.1048575.33554431
is1kc0055c5 Remote Online

7.16383.1048575.33554431

Figure 9. Cognex InSight software decoding EPC code in DataMatrix code and human readable form.

Figure 11. A slightly damaged 2D barcode. Although damaged, much of the remaining data can still be used.

RFID Variables

To accurately test RFID read rates, several variables need to be taken into account.

Frequency Variances. Different RFID tags operate at different frequencies. In the supply chain, the most common are EPC compatible UHF tags.

Tag Technology (Class 1, gen-2, etc.). High-requency EPC tags come in several variations. There are older Class 0 (read only tags), Class 0+ (Class 0 tags with write capability), Class 1 (writable tags), and the newer Gen 2 tags (writable). The older Class 0 and Class 1 tags have been used on the supply chain and are not compatible with one another, but they are being phased out in favor of the newer Gen 2 tags. Many modern RFID devices are compatible with all three tag types. Some older devices can be updated to work with the newer tags.

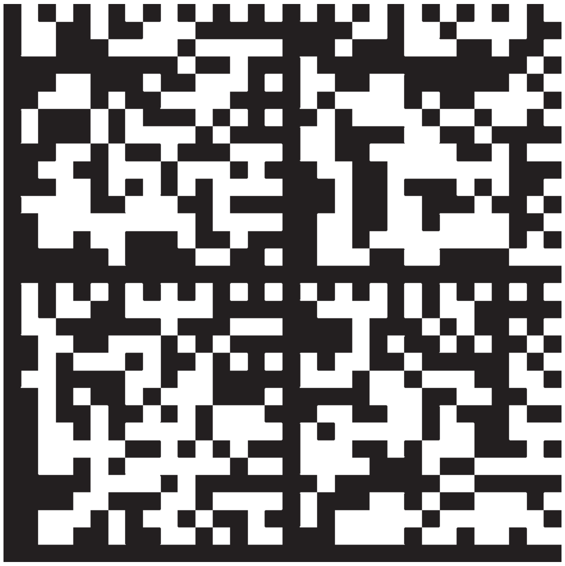

Figure 10. 2 × 2 DataMatrix symbol.

Speed of Conveyor. Wal-Mart desires the ability to read RFID tags on a conveyor belt moving at speeds of up to 600 ft/min. At the higher speeds, the RFID equipment has less time to interrogate tags, making it more difficult to obtain accurate reads.

Reader and Antenna Variances. RFID readers may have special settings that can be configured. Such variables include RF power level and polling frequency. Higher polling frequency typically leads to more reads within a period of time. A higher power level may result in more successful reads; however, it can also result in spurious reads from nearby tags. Some RFID readers can be configured to broadcast a signal when an external trigger occurs, such as a carton breaking an infrared beam, (e.g., Intelletto Technologies LineMaster).

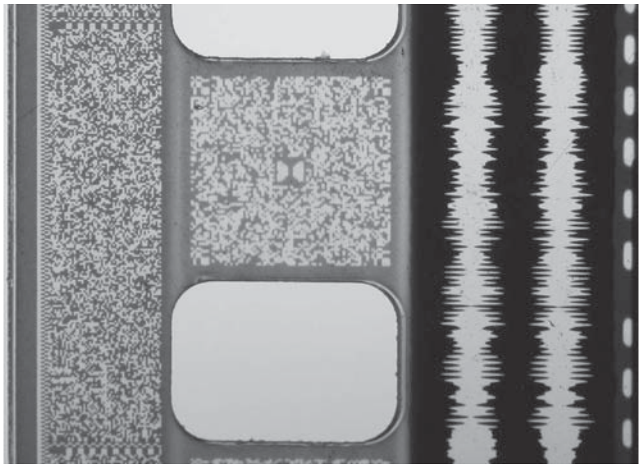

Figure 12. 2D barcodes used to encode digital sound data on movie film (public domain image).

Figure 13. Datamax, Inc. (Orlando, FL) Model I-4210 RFID-enabled thermal transfer printer in the packaging laboratory at the University of Florida. (Photo by Bruce Welt University of Florida.)

Antenna positioning also plays an important role in RFID. Various studies have been conducted to determine optimal positioning of the antennas. Antennas also come in various shapes and sizes, which can also cause variations in read rates.

Environment. Environment can affect read rates of RFID tags. Factors such as heat, humidity, and corrosion can hinder successful reads. Many tags can decay or be more likely to fail under some conditions. Figure 17 shows Gen-2 RFID tags after being exposed to air for several weeks.

2D Barcode Variables

To implement a 2D barcode system, some variables must also be taken into account.

Figure 14. A pallet passes through an RFID portal in the packaging laboratory at the University of Florida. (Photo by Bruce Welt, University of Florida.)

Figure 15. Tagged cartons pass RFID antennas on a conveyor belt in packaging laboratory at the University of Florida. (Photo by Bruce Welt, University of Florida.)

Types of Barcodes. There are several standards of 2D barcodes, along with “stacked” linear barcodes. One of the most common is DataMatrix, which has been used by the Department of Defense and other organizations to identify items. Other standards include Aztec, MaxiCode (used by the United Parcel Service, based in Sandy Springs, Georgia), and PDF417.

Figure 16. Symbol Personal Digital Assistant (PDA) with embedded barcode reader and RFID functionality.

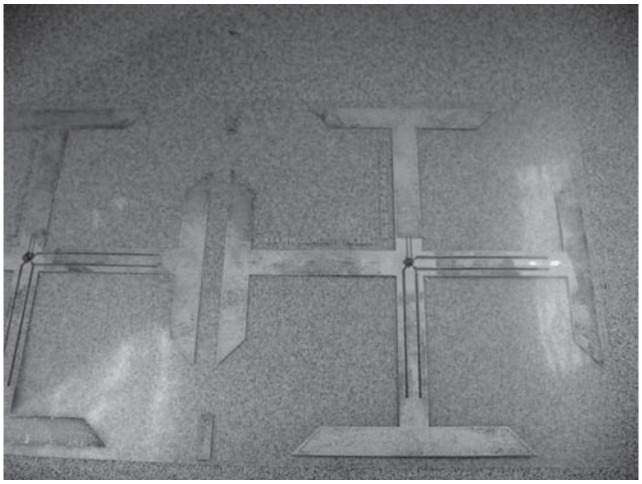

Figure 17. Oxidation apparent on Gen-2 RFID inlays antennas after several weeks exposure to ambient air of the packaging laboratory at the University of Florida.

In addition to standard 2D barcodes, some companies have experimented with color barcodes. One such example is the High Capacity Color Barcode, developed by Microsoft (Redmond, WA) to complement standard UPC barcodes on DVDs and video games. The barcodes can be read using camera phones or webcams to link the user to special content (31).

Speed of Conveyor. As with RFID, the speed of the conveyor system is also a factor. With 2D barcodes, the conveyor speed can have a significant impact on the accuracy of reads.

A typical 2D barcode system uses a CCD array (camera) to read symbols; and with a standard camera, the exposure time and aperture size have an impact. A shorter exposure time will result in a better picture for moving objects, but with result in less light entering the lens. More light can be let into the camera by increasing the aperture size; however, this reduces depth of field that can be used for focusing.

This problem can be countered by using a light source to illuminate the barcode while it is being read, in a similar manner as a flash on a camera. High-speed strobes are often used to freeze images of moving items when using imaging systems. Companies such as Advanced Illumination (Rochester, VT) offer such equipment.

Printing Methods and Materials. The method of printing may have some variances in the results, and also the durability of the labels. Thermal transfer is one of the most common methods of printing labels; however, laser, dot matrix, and inkjet printers can also be used.

Thermal Contact Paper. Thermal contact paper is another method used in label printers. With this method, the paper is chemically treated such that it will change color when heated. This method is common for printing receipts at a point-of-sale. Since other heat sources will continue to darken thermal contact paper and markings may fade over time, this method is not used when persistence of critical data is required.

Laser Engraving. Laser engraving (also known as laser etching) is a method of using lasers to burn designs directly onto a surface, including woods and plastics. Since laser engraving does not require (a) physical contact and (b) messy and expensive inks or solvents, this approach is gaining marketshare in many industries. Figure 18 shows a simple laser engraving apparatus.

Light Variations. Lighting can play a factor in reading barcodes. External lighting can overexpose or underexpose an image captured by a camera, and the reflectivity of some surfaces can hinder successful reads. Thermal transfer, for example, may cause problems if the transfer reflects light from a light source directly into the image sensor.

General Testing Laboratory

A facility involved in testing RFID and related technologies should maintain certain basic equipment and capabilities. These include the following:

Conveyor Systems. The conveyor is the main platform across which tagged items travel. Materials and construction may play a role in testing.

Computer Systems. The ability to run various software applications is required.

RFID Software. To interface with the RFID devices, one may need to use a middleware package. These packages can interface with different brands of readers and process the data.

Vision Software. To decode 2D barcodes, vision software is needed. Some cameras, such as Cognex Inc.'s (Natick, MA) InSight series, include a programmable interface to input a trigger signal, capture an image, decode the image, and output data to a serial or Ethernet connection. The intelligent

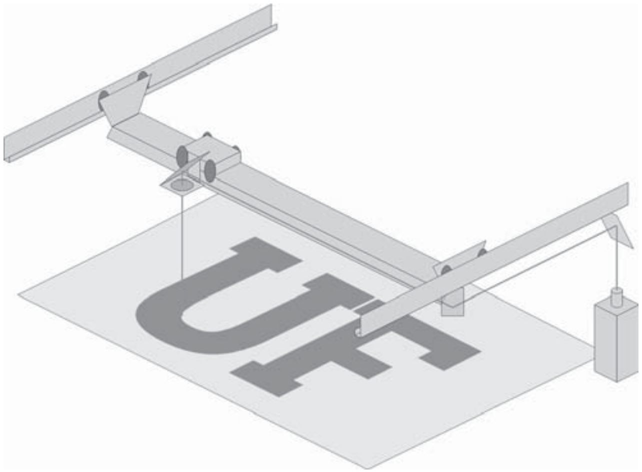

Figure 18. Laser engraving technology.

Figure 19. Sirit InFinity 210 OEM device.

camera may be programmed with or without a host PC. Some cameras do not include software and simply relay images to computers for processing (e.g., Cognex Inc's VisionPro).

Intelligent cameras are generally more expensive, but do not require a host computer to perform all functions. This results in lower overall power and space requirements.

A software-based camera, such as Point Gray Research's (Vancouver, BC, Canada) *Flea,* does not have on-board programming capability and must interface with a computer to be of use. One advantage of software-based cameras is the ease of using multiple cameras and the increased power and flexibility of a computer for image processing

Development Software. To transfer data between the camera software, hardware, and a database interface, development software may be desired. Microsoft Visual Studio, for example, includes Application Programming Interfaces (APIs) to interface with serial ports and TCP/IP. Cognex's VisionPro also includes an interface for use with Visual Studio and can generate applications that can be compiled and edited from within Visual Studio. Other solutions also exist, such as those by Borland and Sun Microsystems.

Database software. A database may be desired to log data captured from RFID, barcode, and/or machine vision devices. Some packages available include Microsoft SQL Server (commercial product), Microsoft SQL Express (free), MySQL (free), and Microsoft Access (commercial). The programming environment can interface with the database using ODBC or JDBC drivers.

PLC. A programmable logic controller may be desired to control trigger signals. The Flea camera, for example, is designed to input 3.3-V signals, while the Cognex Insight will take a 24-V signal.

Sensors. Instead of constantly searching for a tag, an RFID sensor and/or camera can be configured to read a tag when triggered. A common way to do this is by using a simple optical sensor.

Light Source. The read rate of 2D barcodes can be improved significantly at higher speeds with the use of an external light source. Modern light-emitting diodes (LEDs) can emit a bright light onto the barcode, allowing more light to be captured by the camera.

RFID Devices. There are several different types of RFID devices available on the market. Some include built-in antennas, while others use external antennas. Some devices are designed as original equipment manufacturer (OEM) devices and are also designed to be combined with or embedded within another device. Such devices will only have basic RFID functionality. One such example of an OEM device is the Sirit Inc.'s (Toronto, Ontario, Canada) InFinity 210 (shown in Figure 19), which could serve as an RFID core for a branded RFID reader. Data are transmitted to and from the device using special serial commands. It can use either an on-board antenna or connected to a larger external antenna. Other devices are designed for direct interfacing with the user. They may have a user-friendly interface and come with additional features and interfaces. One such example is Intelletto's (Markham, Ontario, Canada) Linemaster, a device designed to be used in conjunction with a barcode scanner (Figure 20).

Antennas. Most supply chain RFID implementations use UHF RFID tags, and as such, will require UHF compatible antennas. Some readers are compatible with multiple frequencies, but may require dedicated antennas for each frequency. Figure 21 shows different antennas used for high-frequency and ultra-high Frequency RFID tags.

Image Sensor. For standard one-color 2D barcodes, a monochrome camera is all that is required and may perform better than a color camera. A color camera can also be used, but for monochrome symbols the color information will be discarded by the symbol

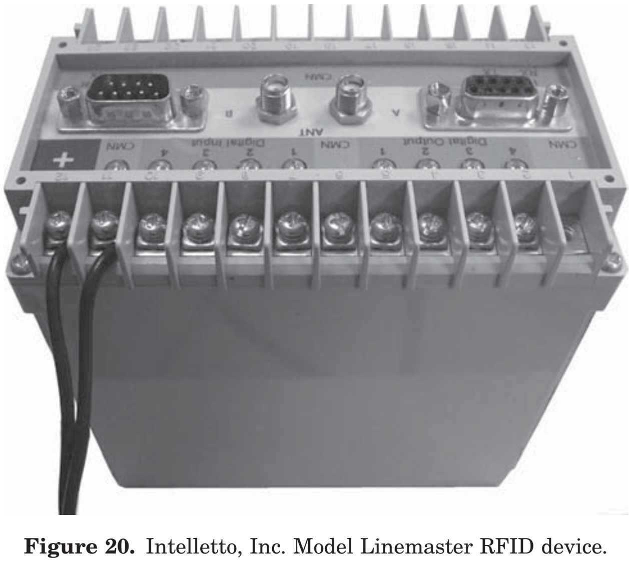

Figure 20. Intelletto, Inc. Model Linemaster RFID device.


Figure 21. UHF (left) and HF (right) RFID antennas.

reading algorithm. A hardware-based camera may interface with the host system using a serial or Ethernet connection, while a software-based camera will use an IEEE 1394 (Firewire) interface for fast data transfer.

Sample Performance Comparison

Tests with such systems are common in the University of Florida Packaging Science Laboratory.

A description of a simple performance comparison between a specific RFID installation and machine vision capture of Datamatrix barcodes follows.

Materials and Methods

Gen-2 Tags. Tags used for the RFID tests included 96-bit Class 1 Gen-2 tags (Figure 22). Each box of tags included 506 tags. The tags were packaged in a static-resistant bag on a spindle in a corrugated regular slotted container. The tags used are actually RFID "inlays" that are designed to be incorporated into conventional labels. For this work, the inlays were used directly.

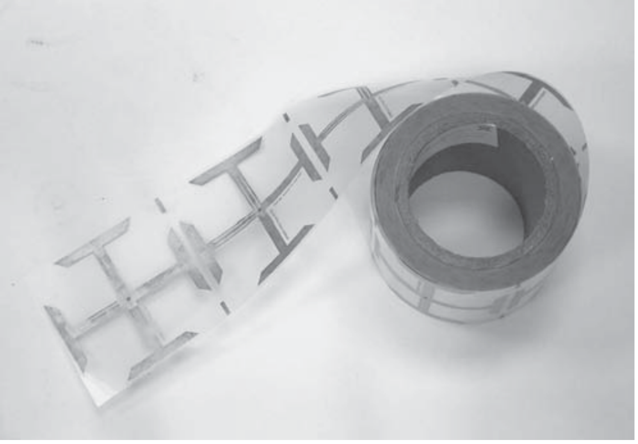
Figure 22. Gen-2 tags used for testing.

Programming. Tags were programmed manually using the Sirit InFinity 210 reader. Once all the tags were programmed, data were verified, with defective tags being replaced.

Upon testing, read rates were reasonable using empty boxes on a conveyor, but not close to the 100% requirement desired by Wal-Mart. Some tags functioned well during the first few trials, but stopped functioning on later trials.

Environment. The inlays did not hold up very well to the lab environment without additional protection. Oxidation was readily apparent on RFID tag antennas.

Read Methods. RFID tags were read with a Sirit Infinity 210 RFID device. For initial testing, tags were placed on empty corrugated fiberboard containers and placed on a conveyor belt. Reads were performed when a container tripped an IR sensor. In addition to RFID, a machine vision system using Cognex's VisionPro software package was used to read 2D DataMatrix barcodes. The 2D barcodes were each placed in a similar location on each carton.

Results and Findings. Data showed that the vision system had more accurate reads. When boxes were placed on the conveyor belt with uniform direction, the vision system was able to pick up every box that passed through. The RFID rates, however, were significantly lower. In addition to tags not being picked accurately by the reader, some tags failed completely.

Results of this particular test (shown in Figure 23) show some actual read rates from a trial using 10 tags, each sent along the conveyor five times each. Also notable is Tag #2, which did not have any RFID reads after being successfully coded and verified. This indicates that the tag had stopped functioning and needed to be replaced. Tag #1, however, worked all five times, indicating that there may be inter-tag differences. While this example does not represent a comprehensive comparison between vision systems and RFID, it does suggest that RFID may not

Figure 23. Sample results of trial with 10 tags, each repeated five times.

be without competition for collecting serialized identification codes going forward.

BIBLIOGRAPHY

1. Smart Cooking/Samsung, 2005. Smart Cooking. Retrieved June 18, 2007, from http://www.smartcooking.co.uk/
2. CASPIAN, 2004. Metro Future Store—Special Report. Retrieved June 16, 2007, from *SpyChips*: http://www.spychips.com/metro/overview.html
3. Alien Technology, 2007. Alien Technology: FSA Manufacturing. Retrieved June 17, 2007, from Alien Technology web site: http://www.alientechnology.com/technology/fsa_manufacturing.php
4. M. Roberti, January 2, 2006. Symbol Says PICA Ready in Mid-2006. Retrieved June 18, 2007, from *RFID Journal*: http://www.rfidjournal.com/article/articleview/2069/
5. Siemens, 2005. What is UID (Unique Identification). Retrieved June 17, 2007, from UID Support.com: http://www.uidsupport.com/what_is_uid/what_is_unique_id.htm
6. Department of Defense, 2006. Department of Defense Guide to Uniquely Identifying Items: Assuring Valuation, Accountability and Control of Government Property. Version 1.6. Office of the Deputy Under Secretary of Defense (Acquisition, Technology & Logistics).
7. EPCGlobal Inc., 2007. EPCGlobal web site. Retrieved June 17, 2007, from EPCGlobal Homepage: http://www.epcglobalinc.org/
8. Wal-Mart Stores, no date. Continued Expansion of Radio Frequency Identification (RFID). Retrieved June 17, 2007, from Wal-Mart Stores: http://walmartstores.com/GlobalWMStoresWeb/navigate.do?catg=339&contId=6181
9. M. Roberti, February 22, 2007. Wal-Mart, Suppliers Affirm RFID Benefits. Retrieved June 17, 2007, from *RFID Journal*: http://www.rfidjournal.com/article/articleview/3059/1/1/
10. R. Lingle, February, 2007. RFID has game at Best Buy. Retrieved June 25, 2007, from *PackWorld*: http://www.packworld.com/view-22679
11. ExxonMobil, 2005. Press Kit—Speedpass. Retrieved June 17, 2007, from ExxonMobil website: http://www2.exxonmobil.com/corporate/Newsroom/NewsReleases/Corp_NR_PressKitSpeedpass.asp?
12. T. C. Chau, B. A. Welt and W. R. Eisentadt, “Analysis and Characterization of Transponder Antennae for Radio Frequency Identification (RFID) Systems,” *Packag. Technol. Sci.* **00**, 33–44 (2006).
13. Y. Hara, February 6, 2006. Hitachi advances paper-thin RFID chip. Retrieved June 17, 2007, from *EE Times*: http://www.eetimes.com/news/design/showArticle.jhtml?articleID=179100286
14. Hoover Aaron (2006, March 15). Student entrepreneurs: New sensor will help guarantee freshness. EurekAlert!
15. M. Bhuptani, and S. Moradpour, *RFID Field Guide*, Sum Microsystems Press, Upper Saddle River, NJ, 2005.
16. RFID-Zapper, 2006. Retrieved June 17, 2007, from https://events.ccc.de/congress/2005/wiki/RFID-Zapper(EN)
17. K. Albrecht, and L. McIntyre, *Spychips*, Plume, 2005.
18. Albrecht, K., McIntyre, L., & Starrett, M. (n.d.). Gillette shelf photographs unsuspecting shoppers! Retrieved June 18, 2007, from Boycott Gillette: http://www.boycottgillette.com/spyshelves.html
19. D. Goldstein, March 7, 1997. Pet chips—people in Hawaii are using microchips injected into a pet’s skin to keep track of lost pets, and help distinguish them from strays. Retrieved June 18, 2007, from FindArticles: http://findarticles.com/p/articles/mi_m1590/is_n11_v53/ai_19256023
20. Verichip Corporation, 2006. Retrieved June 18, 2007, from Verichip Corporation web site: http://www.verichipcorp.com/
21. B. Bacheldor, July 17, 2007. AMA Issues Ethics Code for RFID Chip Implants. Retrieved July 19, 2007, from *RFID Journal*: http://www.rfidjournal.com/article/articleview/3487/1/1/
22. United States Environmental Protection Agency, May 22, 2007. eCycling. Retrieved June 18, 2007, from EPA website: http://www.epa.gov/epaoswer/hazwaste/recycle/ecycling/index.htm
23. B. O’Banion, August 9, 2005. Can RFID Tags Become An Environmental Problem? Retrieved June 18, 2007, from *IndustryWeek*: http://www.industryweek.com/ReadArticle.aspx?ArticleID=10608
24. EPCGlobal Inc., January 31, 2005. Specification for RFID Air Interface.
25. RFID Journal, November 6, 2003. Wal-Mart Outlines RFID Requirement. Retrieved June 18, 2007, from *RFID Journal*: http://www.rfidjournal.com/article/articleview/642/1/1/
26. R. H. Clarke, D. Twede, J. R. Tazelaar and K. K. Boyer, (2005, November 30). “Radio Frequency Identification (RFID) Performance: The Effect of Tag Orientation and Package Contents,” *Packag. Technol. Sci*. **00**, 45–54. (2005).
27. B. A. Welt, and J. Emond, RFID: Making It So…With Some Help from the University of Florida, 2005.
28. M. Roberti, April 5, 2007. DOD Reaffirms Its RFID Goals. Retrieved June 25, 2007, from *RFID Journal*: http://www.rfidjournal.com/article/articleview/3211/
29. RFID Journal, February 11, 2004. Firewall Protection for Paper Documents. Retrieved July 18, 2007, from *RFID Journal*: http://www.rfidjournal.com/article/articleview/790/1/1
30. GS1 US Inc., 2007. The Origins of a Code. Retrieved June 18, 2007, from GS1 US Inc.: http://www.gs1us.org/About/History/UPCBackground/BarCodeOrigin/tabid/74/Default.aspx

31. R. Adams (2007, February 2). Bar Code History Page. Retrieved June 18, 2007, from BarCode1 HomePage: http://www.adams1.com/pub/russadam/history.html
32. B. Moore, February 13, 2007. Bar Code: GS1 to Rename RSS. Retrieved June 18, 2007, from AIM Global: http://www.aimglobal.org/members/news/templates/aiminsights.asp?articleid=2215&zoneid=26
33. GS1 BarCodes, GS1 DataBar 2010: Business Case. Brussels, Belgium, 2007, p. 21
34. L. Sullivan, March 20, 2005. International Paper Rolls Out First RFID Forklift. Retrieved June 18, 2007, from *InformationWeek*: http://www.informationweek.com/story/showArticle.jhtml?articleID=159903043
35. BBC News, April 19, 2007. Colour barcode system to hit DVDs. Retrieved June 18, 2007, from BBC News: http://news.bbc.co.uk/1/hi/technology/6570871.stm

RECYCLING

JOHN K. BORCHARDT
Southhaven Communications,
Houston, Texas

INTRODUCTION

Recycling is steadily increasing in both developed and underdeveloped countries. World population is both growing rapidly and becoming more concentrated in urban areas. Increased urbanization will increase the concentration of packaging wastes, thus improving collection economics. A United Nations study indicates that increased recycling rates are accompanied by job creation and improved living conditions (see also Environmental Laws, North America and International Org).

In the United States, the recycling industry employs about 1.1 million people, with an annual payroll of $37 billion (1).

Paper and board are the most widely used packaging materials in terms of weight. In the United Kingdom, paper and board account for 43% by weight of all packaging (2). Paper and board packaging make up 6.4% of the overall content of typical household waste. For further information on paper and cardboard recycling, see Waste Watch's Paper information sheet. Plastics account for 20% of the weight of all packaging. Glass accounts for 20% of the weight of all packaging and 10% of all goods are packaged in glass.

In the United States, approximately 251 million tons of MSW was generated in 2006 (3). Containers and packaging comprised 40.2% (79.6 million tons) of total municipal solid waste generation. Excluding composting, the amount of MSW recycled increased to 60 million tons, an increase of 1.26 million tons from 2005. The tons recovered for composting rose slightly to 21 million tons in 2006, up from 20.6 million tons in 2005. The recovery rate for recycling (including composting) was 32.5% in 2006 up from 32.1% in 2005

Major sources of packaging wastes are grocery stores, restaurants, and office buildings. Residential collection of waste materials is increasing, although sorting of the wastes is often a major expense. The average composition of U.S. municipal solid wastes (2006) is given in Table 1.

Both economic factors and governmental regulation are driving recycling. Energy costs associated with recycling are almost always less than in manufacture of products from virgin materials. For example, recycled aluminum requires only about 2.8 kWh/kg of metal produced, while primary aluminum production requires about 45 kWh/kg of metal produced (4). Steel and glass recycling consume about 50% of the energy needed to make these products from ore and silica. Plastics recycling takes only 10–15% of the energy needed to refine petroleum and manufacture virgin resins. Incineration of plastics is a less efficient means of saving energy. For example, 100 lb (45.4 kg) of high-density polyethylene (HDPE) has a fuel value of 20×10^6 Btu (19 kJ). Recycling saves twice this: 40×10^6 Btu (38 kJ). Lower energy consumption associated with recycling reduces emissions of carbon dioxide, a greenhouse gas believed to be associated with global warming. For example, producing aluminum by recycling creates only about 4% as much CO_2 as is created when virgin aluminum is produced (4).

Both economic and environmental factors have led to government regulations designed to promote recycling. Economic concerns are related to balance of payment issues when virgin raw materials for packaging products are imported. For example, in China and Japan, limited forest resources means that many paper products have to be imported. Recycling reduces these imports. In fact, Japan imports used paper products from the United States and elsewhere to recycle them.

In some areas, the number of landfill sites is becoming limited. Although the number of landfills in the United States is declining, the remaining sites are large, modern facilities. Concerns about landfill disposal costs are becoming less of a factor in promoting North American recycling.

Environmental concerns include forest depletion and the effects of wastes on the environment. One concern receiving much publicity is the harmful effects that plastics, when eaten, can have on marine animal life such as dolphins.

SEPARATION OF COMMINGLED MATERIALS

Solid wastes, particularly from residential curbside collection programs, arrive at material recovery facilities

Table 1. Composition of U.S. Municipal Solid Wastes

Component	Percent by Weight
Paper	33.9
Plastics	11.7
Metals	7.6
Glass	5.3
Rubber, leather, textiles	7.3
Yard trimmings	12.9
Food scraps	12.4

Source: Reference 3.

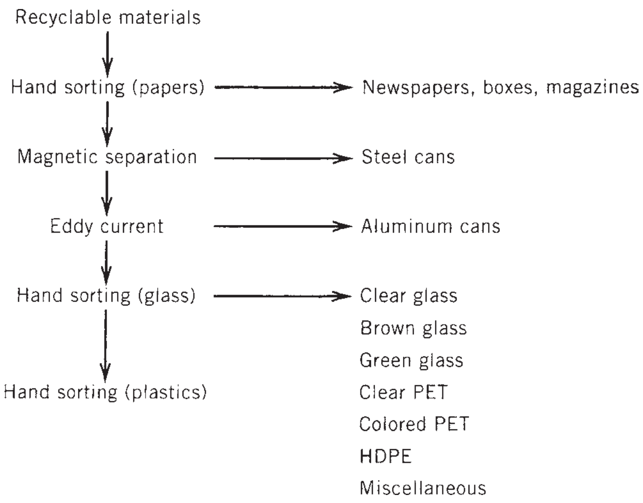

Figure 1. Basic unit operations in sorting waste plastics.

(MRFs) as a complex mixture. MRFs are typically built to process 100–500 tons of waste per day (5). Unit operations are summarized in Figure 1. The wastes are dumped on a tipping floor, where paper products are separated from metals and plastics. Metals and plastics, mostly containers, are pushed onto a conveyer belt. Two types of magnetic separators remove steel and aluminum from plastics and glass. Density differences or manual sorting are used to separate glass from plastics. The glass containers are hard-sorted by color. The plastics are separated into individual polymer types by the MRF or in separate reclaiming facilities (5). Plastic bottles are classified into: clear poly(ethylene terephthalate) (PET) soft-drink bottles; green PET soft-drink bottles; translucent high-density polyethylene milk, water, and juice bottles; pigmented HDPE detergent bottles; poly(vinyl chloride) (PVC) water bottles; and food containers such as polypropylene ketchup bottles (5).

METALS

Ferrous Metals

Iron and steel scrap account for more than one-third of the cast iron and steel produced in the United States. Much of this is “home scrap” produced during production of cast iron and steel. Home scrap is always recycled. “Prompt industrial scrap” is produced by industries while manufacturing products from steel or cast iron. Postconsumer scrap comes primarily from automobiles. Other sources include railroad rails and other machinery. Municipal solid waste is a growing source of postconsumer scrap in the United States. In some countries with low labor costs, ship breaking is a major source of postconsumer scrap.

Shredders received whole or baled vehicle bodies from salvage yards. Typical shredders process 200–1500 cars per day. All major automobile producing countries have adequate capacity to shred their available supply of discarded automobiles. In the United States, approximately 1.21 million tons of steel are recovered annually from 9 million scrap vehicles (6). Steel fuel tanks are removed from automobiles before the vehicles are shredded. These are sold for metal recovery.

A hammermill shreds the vehicle into fist-sized fragments. These are separated into a magnetic fraction (ferrous metals) and a nonmagnetic fraction. The nonmagnetic fraction is separated using air or water to form a low-density nonmetallic fraction and a high-density fraction consisting mostly of zinc, copper, and aluminum.

Tin must be removed when recycling tinplate cans. As little as 0.01% tin can form hard spots in steel and causes difficulties in rolling (6). Therefore, only low levels of steel can scrap can be used directly in furnaces. By processing cans with hot caustic and an oxidizing agent, tin can be removed from tinplated steel cans. The use of steel beverage cans is declining. Those used often contain no tin. Therefore, few mills operate detinning operations. Can scrap has been used as a precipitant in copper leaching mining. However, this is a low-volume application.

Minimills using electric arc furnaces use scrap iron and steel as their only feedstock. The amount of scrap that may be used in basic oxygen furnishes is limited to about 33% of the charge because the only heat source for melting the scrap is carbon and silicon added with iron ore.

Nonferrous Metals

When processing municipal solid wastes, an eddy-current separation unit is often used to separate aluminum and other nonferrous metals from the waste stream. This is done after removal of the ferrous metals (Figure 1). The eddy-current separator produces an electromagnetic field through which the waste passes. The nonferrous metals produce currents having a magnetic moment that is phased to repel the moment of the applied magnetic field. The repulsion causes the nonferrous metals to be thrown out of the process stream away from nonmetallic objects (7).

Another separation device that may be used is the mineral jig. This unit produces a loose vibrating bed of particles in a liquid medium. The vibrations segregate the solids into layers by density. The dense nonferrous metals—primarily lead, zinc, and copper—are at the bottom, while organics are at the top. The middle layer is primarily glass.

Aluminum is the largest-volume nonferrous metal recovered and recycled. More than 95% of beer and carbonated soft-drink containers are two-piece aluminum cans (8). Aluminum is also used for aerosol cans and as foil–plastic–paper laminates to package cereal and frozen foods. Aluminum is also used for food trays and pie plates. All of these are found in and collected from municipal solid wastes.

The energy savings associated with recycling aluminum are driving the aluminum energy to increasingly rely upon remelting of aluminum scrap and less on primary production (9).

Aluminum produced from recycled material requires only about 2.8 kWh/kg, while primary aluminum production requires about 45 kWh/kg of metal produced (10). Primary aluminum production relies on electricity produced largely by coal-fired electricity generating plants, while recycling uses natural gas. Natural gas combustion produces less air pollutants and greenhouse gases than does burning coal.

The Aluminum Industry Technology Roadmap issued in 2003 set a U.S. target to recycle 100% of aluminum by 2020 (11). Achieving this goal will require:

- Designing remelting furnaces that minimize melt lost while increasing melt rates, cost effectiveness, energy efficiency, and safety while reducing emissions of polluting gases.
- Developing low-cost aluminum purification processes to remove impurities such as magnesium, iron, lead, lithium, silicon, and titanium to produce high-purity aluminum from mixed scrap.
- Developing alloys that better match scrap to specifications, allowing for increased utilization.
- Minimizing aluminum loss caused by oxidation and dross formation during remelting.
- Improving separation of metal from dross or salt cake.

Another advantage is that fluoride emission, long a major concern in aluminum smelting, is reduced to the degree that the plant processes recycled aluminum (12). (The U.S. aluminum industry uses 15 kg of fluoride ion per metric ton of virgin aluminum produced. About 10–15% of this fluoride is lost during the production process.)

Organic coatings must be removed before the recovered aluminum can be used to make new sheet stock (7). This is done in special furnaces. About 90% of recovered aluminum cans is converted into new cans. The remainder are used to make other aluminum products.

Removing tin from steel cans is the only U.S. domestic source of this metal. As noted earlier, treatment of steel cans with caustic and an oxidizing agent is used to separate the tin. Recycled lead amounts to about 60% of the U.S. lead industry production. Most recycled lead comes from automobile batteries.

Total U.S. recovery of nonferrous metals from vehicle shredding is 0.8 million tons annually (6). The metals are mostly zinc, copper, and aluminum. About 8 kg of copper can be recovered from each automobile copper radiator. Their recovery and sale contributes significantly to shredder profits.

Precious metals are recovered profitably from automobile catalytic converters.

GLASS

Three-quarters of glass container shipments are for beverages. The largest glass packaging markets are soft drink, beer, wine, and hard-liquor bottles (13). Some glass bottles are used in food, drugs, and cosmetics packaging. About 75% of the containers are narrow-neck bottles (14). Energy costs drop about 2–3% for every 10% cullet used in the manufacturing process. For every six tons of recycled container glass used, one less ton of carbon dioxide, a greenhouse gas, is reduced compared to manufacturing glass.

When processing municipal solid wastes, glass is generally removed by hand sorting after separating paper and metals. The mineral jig may be used to separate glass particles from other particles. Particles should be less than 5 cm in their longest dimension. Glass occurs in the middle layer of the slurry formed by the mineral jig. Froth flotation may be used to separate glass particles from denser particles. Froth flotation is most efficient for particles less than 850 μm in size. A cationic fatty-acid amine surfactant has been used to improve the efficiency of froth flotation of glass.

The color distribution of glass in municipal solid waste averages 65% colorless, 20% amber, and 15% green. [As manufactured, 85% of container glass is clear (13).] Hand sorting of containers or optical sorting of particles can be used to separate glass of different colors. In optical sorting, interruption of a light beam by a colored or opaque particle will activate an air jet that blows the particle out of the process stream. Mixed colored glass can be used in amber and green glass bottle furnaces in proportions of $\leq 5\%$ and $\leq 20\%$, respectively.

Most collected glass containers are used in the manufacture of new glass containers (15). The amount of cullet (recovered glass) used in glass production typically constitutes 46% of the charge used to manufacture amber soda-lime container glass. About 25% of this cullet is from postconsumer sources, while the rest is waste from the glassmaking process. Recycled glass used at levels as high as 80 percent when available (14). Since glass has an unlimited life, it can be recycled repeatedly.

While most recycled glass is used in the manufacture of new glass, glass can be used without purification or other processing by other industries. Crushed glass is used in construction as aggregate for roadways, in building bricks, in synthetic slate products, and for glass-wool insulation and honeycomb structural materials.

PAPER

In 2006, a record 53.4% of the paper consumed in the U.S. (53.5 million tons) was recovered for recycling (16).

The primary process steps in recycling old corrugated containers (OCCs) and other paper packing materials are pulping, high-density cleaning, coarse and fine screening, centrifugal (reverse) cleaning, fiber fractionation, and refining. Pulping disintegrates the containers into individual fibers dispersed in water. High-density cleaning removes large dense particles such as nails and large staples (17). Coarse screening removes large low-density contaminants such as unpulped tapes and large adhesive particles (18). Coarse screen hole size ranges from 6 to 20 mm. Fine screens are fitted with slots as small as 0.15–0.30 mm. These separate smaller ($\geq$250-μm) contaminant particles such as plastic, wax, and adhesive particles (19). A type of hydrocyclone device called a centrifugal or reverse cleaner is used to remove low-density (adhesive) particles in the 70 to 250-μm size range (17).

Despite the use of screening and reverse cleaning to remove adhesive particles or "stickies," their removal is often inefficient. Stickies in pulp cause paper-mill operating problems by reducing pulp drainage rates on paper machines (20). They do this by forming deposits on paper-machine wires, dryer fabrics, press rolls, and drying cylinders. Reduced drainage rates force operators to run paper machines at slower speeds or shut them down to clean the fabrics. Both result in lower mill production rates and reduced profitability. Stickies also prevent good fiber–fiber bonding, reducing paper strength, an important consideration for corrugated containers. Both hot-melt adhesives and pressure-sensitive adhesives can form stickies.

Fractionation separates fine particles and short, weak cellulose fibers from longer, stronger fibers (21). Refining is used to develop the desired pulp drainage properties on the paper machine and control paper bulk and density, strength, surface smoothness, and porosity (22, 23). Caustic soaking is also used to improve OCC fiber properties (24).

Extensive bleaching of OCC can produce a high-brightness pulp suitable for use in manufacturing office paper (25). Economics compare favorably to those obtained for manufacturing office paper from de-inked recovered office paper (26).

A considerable fraction of corrugated containers are coated with wax to increase water resistance. Waxes and hot-melt adhesives can form a thin film when making linerboard from OCC and result in a slippery surface (27). This can cause "telescoping" when the linerboard is wound on a roll. When recycling OCC, removal of this wax is difficult. Flotation has been found to remove the wax efficiently (27). However, high paper fiber losses make this process uneconomical.

PLASTICS

Plastics recycling has several advantages (28):

- Conservation of nonrenewable fossil fuels: Plastic production uses 8% of the world oil production, 4% as feedstock and 4% for manufacture.
- Reduced consumption of energy.
- Reduced emissions of carbon dioxide, nitrogen oxide and sulfur dioxide (SO_2).
- Reduced amounts of solid waste going to landfills.

The economic attractiveness of plastics recycling is dependent upon the cost of the plastics feedstocks, crude oil, and natural gas. For example, the price of recycled polyethylene can vary from 85% to 105% of the virgin polyethylene price, depending upon feedstock prices. If the crude oil price doubles, as occurred in 2004–2005, and the energy cost is 25% of the total cost of the virgin or the recycled polymer, virgin polymer cost increases 75% while recycled polymer cost increases 25%.

Primary recycling is the recycling of plastics that are plant scrap and have not been sold for consumer use. Secondary recycling is the physical cleaning and processing of postconsumer plastic products. Tertiary recycling is the chemical treatment of polymers. This treatment is usually depolymerization to produce monomers that are purified and then polymerized to produce new polymer. Using tertiary recycling, materials such as fillers and fibers can be physically removed from the monomer. The monomers can also be purified by distillation and other processes prior to polymerization. The leading example of tertiary recycling is poly(ethylene terephthalate) (PET).

Table 2. Residential Recovery Rate by Package Type

Package Type	Percent Recovery
Beverage bottles	65
Liquid detergent bottles	50
Other rigid containers	10
Packaging film	5
Average of all plastics	30

Source: Reference 6.

Residential collection programs indicate high collection rates for easily recognized types of containers (Table 2).

Sorted plastic packaging materials are shipped, usually in bales, to processing plants to be converted to polymer resins. The bales are broken and the bottles sorted to ensure that only one type of polymer is further processed. Processing consists of chopping and grinding the bottles into flakes. These flakes are washed. Processing steps such as flotation are used to remove polymeric contaminants from the flakes. The flakes are melted and converted into pellets. Process costs are summarized in Table 3.

For high-value food-packaging applications, minimal migration of contaminants into food products is critical. Currently the FDA requirement is a maximum 0.5 part per billion (ppb) of noncarcinogenic compounds by dietary exposure (29).

Poly(ethylene Terephthalate) (PET)

Originally, PET was used virtually exclusively to package soft drinks. As a result the recyling stream was quite homogeneous, consisting of unpigmented one- and two-liter bottles with a small percentage of green bottles. However, PET is now used to package a wide variety of beverages besides soft drinks including water, fruit juice, tea, and beer, plus other products such as peanut butter, ketchup, and edible oils. These products are often packaged in bottles with a wide range of pigments in many sizes and shapes. In addition, various adhesives and barrier resins are combined with PET (30).

Table 3. Approximate Polymer Recycling Costs

	Costs	
Process Step	$ per Pound	Percent
Collection	0.10	27
Sorting	0.12	32
(Subtotal cost)	(0.22)	(59)
Grinding and cleaning	0.15	41
Total	0.37	100

Source: Reference 6.

In 2006, 30.9% of plastic soft drink bottles were recycled. Initial polyethylene terephthalate (PET) processing is similar to that outlined in Table 3. Cleaning comprises washing, rinsing, and drying. Poly(vinyl chloride) (PVC) and PET have very similar density values; both will sink to the bottom of the waterbath during rinsing. Therefore it is difficult to separate the two polymers after the bottles have been ground into small particles (31). Melting PET containing PVC will produce black spots due to charring of the PVC during processing to produce new bottles (32, 33).

For food applications, improved cleaning of PET produced by secondary recycling is needed. Supercritical fluid extraction using carbon dioxide (34) and solvents such as propylene glycol (35) have been proposed. High temperature and the use of vacuum to remove volatile impurities has also been suggested (35). Stripping of volatile components at temperatures above 160 °C for 3 min has been reported (36). Application of a multilayer approach, the manufacture of a bottle with an inner layer of recycled PET sandwiched between surface layers of virgin PET, is used commercially for soft drink applications (37).

Two PET tertiary recycling technologies are used commercially: methanolysis (38) and glycolysis (39). Both cleave the ester linkages in the polymer to form monomers. In methanolysis, methanol is used to cleave the polymer ester linkages, producing stoichiometric amounts of dimethyl terephthalate and ethylene glycol (38, 40). The ethylene glycol is separated and purified by distillation. The dimethyl terephthalate is purified by crystallization and distillation. Both bis-hydroxyethylterephthalate and oligomers are formed in glycolysis (37, 40). These are recovered and purified by vacuum distillation and then polymerized in the presence of ethylene glycol to form PET. Glycolysis is claimed to be somewhat less costly than methanolysis (38).

Hydrolysis yielding terephthalic acid and ethylene glycol is a third process. High temperatures and pressures are required for this currently noncommercial process. The purification of the terephthalic acid is costly and is the reason the hydrolysis process is no longer commercial.

High-Density Polyethylene

Process steps in recycling high-density polyethylene (HDPE) are similar to those outlined in Table 3. Cleaning comprises washing, rinsing, and drying (32). Removing labels is the worst problem in washing and drying stages. Detergents are often used to improve the efficiency of label removal. Metal foil labels can introduce metals into the polymer. When metal foil labels are heat-sealed onto plastic, the only way to remove them is using an extrusion melt filter. This leads to plugging of the filter screens causing more frequent changes and increasing production costs.

During the rinse cycle, polyethylene particles float to the surface of the waterbath. The higher-density PET and PVC particles sink to the bottom of the bath and can be separated from the polyethylene.

Blends of PET and HDPE have been suggested to exploit the availability of these clean recycled polymers. The blends could combine the inherent chemical resistance of PET with the processing characteristics of HDPE. Since the two polymers are mutually immiscible, about 5% compatibilizer must be added to the molten mixture (38). The properties of polymer blends containing 80–90% PET/ 20–10% HDPE have been reported (41). Use of 5–15% compatibilizer produces polymers more suitable for extrusion blow molding than pure PET.

Polypropylene

In 2005, polypropylene recycling was 10.1 million pounds recovered. Polypropylene (PP) is used in packaging applications as films and in rigid containers. Battery cases could be considered another packaging application. Dead batteries are often collected at the point of sale of new batteries. In the United States, some states have laws mandating this. Lead, acid, and plastics, particularly PP from battery casings, are recovered and recycled (6). PP is also recovered from bale wrap and other PP fabrics used for wrapping in the textile industry and from other containers (42).

Steps in polypropylene recycling include size reduction by grinding, washing, rinsing, and drying to remove contaminants and produce PP flakes (42). After extrusion, molten polymer is filtered through screen packs. The polymer may be separated into different melt flow ranges to produce more uniform product grades.

Polystyrene

Polystyrene (PS) packaging applications include injection-molded products such as beverage containers, dairy product containers, and packaging for personal-care products (43). Extruded solid-sheet PS packaging products include salad boxes, dairy-product containers, baked-goods containers, and vending cups and lids. Extruded foam sheet PS packaging products include poultry and meat trays, produce trays, hinged-lid containers, egg cartons, and foam cups. One formerly large-volume PS use, fast-food clamshell containers, has greatly diminished because of concerns over slow biodegradation of discarded polystyrene containers. Blow- and foam-molded PS packaging products include vitamin bottles, loose-fill packaging, and cushion packaging.

Polystyrene recycling processing steps include densification (for foams), granulation to reduce particle size, washing, drying, extrusion, and pelletizing. High-density baling is used to increase the bulk density of polystyrene, often by a factor of 2. Contaminants are more easily removed before this densification step than after. A demonstration plant chemically decomposes polystyrene to produce monomer (43).

Consumers readily recognize polystyrene foam products and turn these products in for recycling. However, recovery rates for other PS packaging products is significantly less (43).

Commingled Plastic Wastes

A relatively small amount of PVC goes into packaging applications and appears in municipal solid waste (33). The greatest concern with PVC is as a contaminant in other polymers being recycled, particularly PET.

Table 4. Representative Composition of Automobile Shredder Residue

Material	Percent by Weight
Plastics	27
Rubber	7
Glass	16
Textiles	12
Fluids	17
Other	21

Source: Reference 6.

The composition of nonmetal residues produced in shredding automobiles is summarized in Table 4. Each vehicle generates 500–800 lb of residue. The annual U.S. total is about 3.5 million tons or about 1.3% of the municipal solid waste generated annually (3). The mixture is too complex to separate and recycle. Depending on the amount of glass, water, metal, and dirt present, the residue has a heating value of 4800–6800 Btu/lb (6, 44). Incineration reduces residue weight by 50% and volume by 80%.

Advanced waste recycling is the high-temperature/high-pressure conversion of commingled plastic wastes to form petrochemical process streams (45). Research is in progress to determine the conditions that will favor formation of certain types of chemical feedstocks, including synthesis gas (hydrogen + carbon monoxide), hydrogen, crude pyrolysis oil (containing benzene, toluene, and xylene), olefins, and oxygenates (methanol, esters, methyl formate, etc). This technology has also been evaluated for producing fuels: (a) medium-Btu gas for boilers and (b) liquid fuels such as diesel oil. None of these processes is currently economic.

ECONOMICS AND STATISTICS

In the United States the number of beverage containers sold increased approximately 25% between 1996 and 2006. However, the number recycled remained essentially flat at approximately 75 billion weighing approximately 4 million short tons (46). Between 1990 and 2006, the recycling rate for all beverage containers declined from 49% to 39% after reaching a high of 53% in 1992 (Anonymous, Container Recycling Institute, http://www.container-recycling.org/images/allrates/recrate-90-06.gif).

The materials used in beverage containers has changed substantially between 1993 and 2004. The fraction of aluminum containers has declined from 67% to 50% in this period, while the fraction of class containers has declined from 32% to 18% (47). In contrast, the fraction of PET bottles has increased from 9% to 25%.

Overall, 2005 recycling for all packaging is over 25% in a number of old EU Member States (Austria, Belgium, Germany, Italy, the Netherlands, Norway, Sweden, and Switzerland). In addition, new Member States like the Czech Republic and Slovenia exceed 25% (48). In 2005, 35% of all PET bottles were recycled in the EI , equivalent to 0.8 million metric tons.

Paper

Paper recovery now averages 346 pounds for each man, woman, and child in the United States. Exports of paper to be recycled have doubled since the late 1990s, according to the American Forestry & Paper Association (49).

Eighty-one percent of the paper recovered is recycled by U.S. mills. Sixteen percent is exported to foreign markets. The rest is used domestically to manufacture products such as molded packaging, compost, and kity litter. Mills buy recycled paper loose or in bales. Grades of paper include mixed paper, mixed office paper, sorted white ledger, sorted colored ledger, computer printout, newspaper, corrugated containers, and magazines (50).

More than 228 U.S. mills and industrial facilities convert corrugated containers and other paper packaging to new paper products and construction materials (51). More than 60 of these produce linerboard and corrugated medium with a recycle content of 100% (52). In North America, minimills designed to process old corrugated containers are becoming increasingly common. Located in or near major cities, minimills are 25–50% the size of conventional paper mills.

Metals

The U.S. aluminum industry recycled 51.9 billion aluminum cans in 2006, half a billion more than in 2005 (53). It has the highest recycling rate of any beverage container at 51.6%. However, the recycling rate has declined from its 1997 high of over 65% (54).

An estimated five billion aluminium cans were used in the UK in 2001, 42% of which were recycled (55).

In the United States, the recycling rate for steel packaging was 63% in 1999 (56). In the United Kingdom, the recycling rate for steel packaging, including transport packaging, such as steel drums and bale wire, was 42% in 2002 (57). In 2005, over 2.3 million metric tons of steel packaging were recycled in the 25 countries of the European Union (58). This represents an increase of 6% compared to 2004 and a recycling rate of 63%.

Glass

In 2005, 25.3% of all glass containers were recycled (59). The recycling rate of glass beverage containers declined from 30% to 20% between 1996 and 2006 (60). Glass makes up about 6% by weight of the material in municipal waste streams recycled (59). Cullet from recycled glass costs 80–95% of the virgin raw materials used in glass production. In addition, the use of cullet saves 15% of the energy costs associated with glass production from virgin raw materials. This energy savings arises from the lower melting temperature of cullet compared to virgin raw materials and lower operating costs for pollution-abatement equipment.

Seven billion glass containers were produced in the United Kingdom in 2003 and the recycling rate has remained relatively constant at approximately 33% since 2000 (61). This contrasts with much higher recycling rates of 80–90% in European countries with more extensive waste collection systems.

Plastics

The total pounds of plastic bottles recycled in 2005 in the United States reached a new record high of 2.102 billion pounds (62). PET and HDPE together comprise over 95% of the plastic bottle market and 99.6% of the recycled pounds (63).

In 2005, the recovery rate for plastics in the European Union was 47% (64).

In 2005, 5.075 billion pounds of PET bottles and jars were available for recycling in the United States (65). Of this, 1.170 billion pounds was collected and sold. Of this, 58% were used by U.S. processors and 42% exported. The favorable economics of PET recycling have been attributed in part to forward integrated PET recyclers consuming their own product to make bottle resin (32).

In 2005, the HDPE bottle recycling rate increased 1.2% to 27.1%. Exports of collected HDPE bottles for recycling overseas were 162.4 million pounds, nearly 18% of the HDPE collected (63).

The largest used for recycled PET and HDPE resins is fabrication of new bottles (63).

In 2005, 10.1 million pounds of polypropylene was recycled in the United States (63). Most of this is derived from the recovery of polypropylene bottle closures during PET recycling. In addition, polypropylene bottles are commonly recycled with high-density polyethylene (HDPE). At levels up to 5% by weight, polypropylene has a negligible impact on the properties of recycled HDPE resins.

The costs of recycling commingled plastics has been estimated at $1700 per ton (66). This is 10 times more expensive than recycling easily separated homogeneous products such as PET and HDPE.

BIBLIOGRAPHY

J. K. Borchardt, “Recycling” in A. J. Brody and K. S. Marsh, eds., *The Wiley Encyclopedia of Packaging Technology*, 2nd edition, Wiley, New York, 1997, pp. 799–805.

Cited Publications

1. Anonymous, Aluminum Now, **6**, 1 (2004).
2. Anonymous, http://www.wasteonline.org.uk/resources/InformationSheets/Packaging.htm.
3. Anonymous, “Municipal Solid Waste in the United States: 2006 Facts and Figures,” U.S. Environmental Protection Agency, www.epa.gov/msw/pubs/mswchar06.pdf.
4. S. K. Das, *Materials Science Forum*, Vols. 519–521, 2006. pp. 1239–1244.
5. R. G. Saba and W. E. Pearson, “Curbside Recycling Infrastructure: A Pragmatic Approach” in C. P. Rader, S. D. Baldwin, D. D. Cornell, G. B. Sadler, and R. F. Stockel, eds., *Plastics, Rubber, and Paper Recycling: A Pragmatic Approach*, American Chemical Society, Washington, DC, 1995, Chapter 2, pp. 11–26.
6. R. A. Pett, A. Golovny, and S. S. Labana, “Automotive Recycling” in Ref. 5, pp. 47–61.
7. E. Schloeman and D. B. Spencer, *Resource Recovery Conserv.* **1,** 151 (1975).
8. R. E. Snaders, Jr., “Aluminum and its Alloys” in the *Kirk–Othmer Encyclopedia of Chemical Technology*, Vol. 2, 5th edition, Wiley, Hoboken, 2004.
9. K. W. Das Subodh, J. Long III, H. W. Hayden, J. A. S. Green, and W. H. Hunt, Jr., “Energy implications of the changing world of aluminum metal supply,” *J. Miner. Met. Mater. Soc.* **56**(8), 1047–4838 (2004).
10. W. T. Choate and J. A. S. Green, *Modeling the Impact of Secondary Recovery (Recycling) on the U.S. Aluminum Supply and Nominal Energy Requirements*, The Minerals, Metals and Materials Society, Warrendale, PA, 2004.
11. *Aluminum Industry Technology Roadmap*, The Aluminum Association Inc., Washington, DC, 2003.
12. K. Grjotheim, H. Kvande, K. Hotzfeldt, and B. J. Welch, *Can. Metall. Q.* **11**(4), 585 (1972).
13. Anonymous, *Ceramic Ind.* **141**(6), 14 (1993).
14. J. Cattaneo, “Commodities Update: Glass Container Recycling” in *Virginia Recycling Association 2007 Annual Conference*, http://www.vrarecycles.org/downloads/conf2007/VRA percent20Glass percent20Markets percent20Presentation. ppt (May 1, 2007).
15. Anonymous, “Glass,” http://www.epa.gov/jtr/comm/glass.htm, (2007).
16. Anonymous, “AF&PA Sheds Light on Recycling,” http://www.packaging-online.com/paperboardpackaging/article/articleDetail.jsp?id = 415756 (March 31, 2007).
17. K. Merriman, in R. J. Spandenberg, ed., *Secondary Fiber Recycling*, TAPPI Press, Atlanta, 1993, p. 101.
18. T. Bliss, in Ref. 11, p. 125.
19. C. M. Vitori, *Pulp Pap. Can.* **94**(12), 109 (1993).
20. M. Doshi, *Prog. Paper Recycl.* **4**(2), 103 (1995).
21. C. F. Yu, R. F. DeFoe, and B. R. Crossley, in *Proceedings of the TAPPI Pulping Conference*, TAPPI Press, Atlanta, 1994, p. 451.
22. M. Doshi, *Prog. Paper Recycl.* **1**(2), 61 (1992).
23. R. DeFoe, *TAPPI J.* **76**(2), 157 (1993).
24. T. Pekkarinen, “Fractionation of OCC Waste Paper with a Pressure Screen” in *Proceedings of the TAPPI Pulping Conference*, TAPPI Press, Atlanta, 1985, p. 37.
25. T. Nguyen, A. Shariff, P. F. Earl, and R. J. Eamer, *Prog. Paper Recycl.* **2**(3), 25–32 (1993).
26. M. Bisner, R. Campbell, and W. T. McKean, “Bleached Kraft Pulp from OCC” in *Recycled Paper Technology: An Anthology of Published Papers*, TAPPI Press, Atlanta, 1994, pp. 48–56.
27. G. Galland, Y. Vernac, and J. Brun, “Recycling of Waxed Papers and Boxes” in Ref. 26, pp. 81–89.
28. Anonymous, “Plastics Recycling I: General Overview,” http://www.specialchem4polymers.com/resources/articles/article.aspx?id = 2369 (February 7, 2006).
29. Anonymous, *Fed. Reg.* **58,** 52719–52729 (October 12, 1993).
30. Anonymous, “2005 Report on Post Consumer PET Container Recycling Activity, Final Report,” National Association for PET Container Resources, www.napcor.com.
31. Anonymous, *Modern Plast.* **71,** 73–94 (1994).
32. W. K. Atkins, “A Resin Producer’s Perspective and Experiences in Polyethylene Recycling” in Ref. 5, pp. 104–112.
33. R. A. Burnett, “Progress in Poly(vinyl chloride) Recycling” in Ref. 5, pp. 97–104.
34. A. S. Gupta and J. T. Camp, U.S. Patent 4,680,060. (to The Coca-Cola Company), (July 14, 1987).
35. *Points to Consider for the Use of Recycled Plastics in Food Packaging: Chemistry Considerations*, U.S. Food and Drug

Administration, Center for Food Safety and Applied Nutrition, Publication HFS-245, Washington, DC, April 1992.

36. D. E. Pierce, D. B. King, and G. D. Sadler, "Analysis of Contaminants in Recycled Poly(ethylene terephthalate) by Thermal-Extraction Gas Chromatography–Mass Spectroscopy" in Ref. 5, pp. 458–471.
37. T. H. Begley and H. C. Hollifield, *Food Technol*. **47,** 109–112 (1993).
38. D. Gisstis, *Makromol. Chem. Makromol. Symp*. **57,** 185 (1992).
39. G. Bauer, in K. J. Thome-Kozmensky, ed., *Recycling of Wastes*, EF-Press, Berlin, 1989, p. 293.
40. F. L. Bayer, D. V. Myers, and M. J. Gage, "Consideration of Poly(ethylene terephthalate) Recycling for Food Use" in Ref. 5, pp. 152–160.
41. S. A. Jabarin and V. V. Bhakkad, "Morphology and Properties of Poly(ethylene terephthalate)—High-Density Polyethylene Blends" in Ref. 5, pp. 113–138.
42. R. M. Prioleau, "Recycling of Polypropylene" in Ref. 5, pp. 80–88.
43. D. A. Thomson, "Polystyrene Recycling: An Overview of the Industry in North America" in Ref. 5, pp. 89–96.
44. W. S. Hubble, I. G. Most, and M. R. Wolman, *Investigation of the Energy Value of Automobile Shredder Residue*, Publication DOE/ID/12551-1, U.S. Department of Energy, Washington, D.C., August 1987.
45. S. J. Pearson, G. D. Kryder, R. R. Kopang, and W. R. Seeker, in Ref. 44, pp. 183–193.
46. Anonymous, Container Recycling Institute (http://www.container-recycling.org/images/allrates/recsale-units-96-06.gif).
47. Anonymous, Container Recycling Institute, http://www.container-recycling.org/assets/html/plastic/2006-11-PETStrategies_files/frame.htm).
48. Anonymous, "The Compelling Facts About Plastics: An analysis of plastics production, demand and recovery for 2005 in Europe," www.endseuropedaily.com/docs/70514a.pdf (spring 2007).
49. Anonymous, "AF&PA Sheds Light on Recycling," http://www.packaging-online.com/paperboardpackaging/article/articleDetail.jsp?id = 415756 (March 31, 2007).
50. "Paper and Paperboard Products, United States Environmental Protection Agency, hhttp://www.epa.gov/epaoswer/non-hw/muncpl/paper.htm, accessed September 2008. G. B. Stanley, *TAPPI J.* **79**(1), 37 (1996).
51. Doshi & Associates, "1996–1997 Directory of Recycled Pulp & Paper Mills," supplement to *Progress in Paper Recycling* **5**(3) (1996).
52. W. E. Franklin, Old Corrugated Containers Recovery Forecast" in V. Stefan, ed., *Recovery and Use of OCC*," Miller Freeman, San Francisco, 1993, pp. 12–14.
53. Aluminum Association, Inc., "U.S. Aluminum Can Recycling Steady in 2006," Business Wire Press Release (June 27, 2007).
54. Subodh K Das, "Emerging Trends in Aluminum Recycling: Reasons and Responses," Light Metals 2006 *Edited by Travis J. Galloway*, The Minerals, Metals & Materials Society, Warrendale, PA, 2006.
55. Anonymous, "e-Digest of Environmental Statistics," http://www.wasteonline.org.uk/resources/InformationSheets/Packaging.htm (2004).
56. Anonymous, "Municipal Waste," U.S. Environmental Protection Agency, http://www.epa.gov/garbage/recycle.htm.
57. Anonymous, "e-Digest of Environmental Statistics," http://www.wasteonline.org.uk/resources/InformationSheets/Packaging.htm (2004).
58. M. Beck, "More Growth in Europe's Steel Packaging Recycling," Recyclers World, http://www.recycle.net/cgi-bin/exview.cgi?rw = 60&w = 01&item = LA762934&st = LA&g = 04 (December 6, 2001).
59. J. Cattaneo, Glass Packaging Institute, "Commodities Update: Glass Container Recycling," http://www.vrarecycles.org/downloads/conf2007/VRA percent20Glass percent20Markets percent20Presentation.ppt (May 1, 2007).
60. Anonymous, Container Recycling Institute, http://www.container-recycling.org/images/glass/graphs/recrate-percent-96-06.gif).
61. Anonymous, "e-Digest of Environmental Statistics," http://www.wasteonline.org.uk/resources/InformationSheets/Packaging.htm (2004).
62. "Plastics Recycling Reaches a Record High of More Than 2 Billion Pounds Annually http://www.americanchemistry.com/s_acc/sec_news_article.asp?SID = 1&DID = 4766&CID = 206&VID = 142&RTID = 0&CIDQS = &Taxonomy = &special-Search = (February 5, 2007).
63. Anonymous, "2005 National Post-Consumer Plastics Bottle Recycling Report," www.americanchemistry.com).
64. Anonymous, "The Compelling Facts About Plastics: An analysis of plastics production, demand and recovery for 2005 in Europe," www.endseuropedaily.com/docs/70514a.pdf (spring 2007).
65. "2005 Report on Post Consumer PET Container Recycling Activity, Final Report," National Association for PET Container Resources, www.napcor.com).
66. J. R. Ellis, "Polymer Recycling: Economic Realities" in Ref. 5, pp. 62–69.

ROLL HANDLING

In web processes, such as slitting and rewinding, coating and laminating, printing, as well as other applications, rolls must be loaded from the rewind station after the process. Because of weight and size, handling of rolls is done by general-purpose equipment, such as cranes and forklifts. For greater productivity, roll-handling equipment is engineered to suit the characteristics of the web-process equipment. An important fringe benefit of engineered handling systems is the reduction of safety hazards associated with general-purpose equipment.

Slitter/Rewinder Overview. A slitter/rewinder (see Slitting-rewinding machinery) converts master rolls into high-quality, narrow-width, rewound rolls that may or may not be the final product. Variables in the web characteristics and in the final form of the product determine which of the several types of slitting and rewinding techniques is used. The slitter/rewinder machine is typically composed of unwind, slitting, and rewind stations. A turret used for unwinding allows the loading of new master rolls while the machine is slitting and rewinding. Continuous unwinding can be attained by automatic splicing equipment.

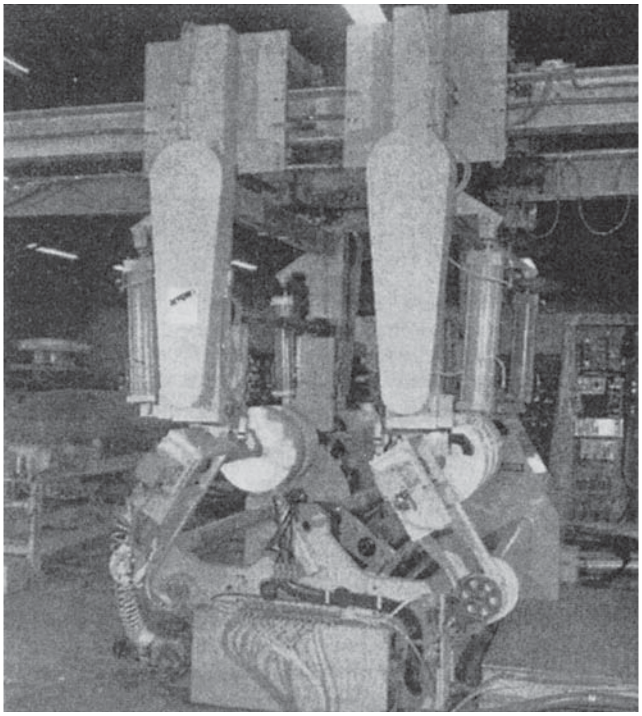

Figure 1. A duplex slitter/rewinder with roll-handling system. Turret carriages are in full-roll downward position at slitter/rewind station. New mandrels are in an upward position awaiting turret index.

The slitting methods used depend on the material characteristics and quality of the slit edge desired. Razor slitting is used primarily on films and score slitting on many types of fabrics, nonwovens, and textiles. Shear slitting is excellent for most materials but requires a relatively high initial investment and operator expertise. Locked-core rewinding is successful on good caliper webs and pressure-sensitive tapes with relatively small roll diameters. Differential rewinding is required for off-caliper materials and large-diameter rolls.

An effective method of rewinding is to alternate the slit webs on two rewinding shafts. This method, termed "duplex rewinding", is particularly suited for narrow-width slit material. Winding on a single shaft, called simplex winding, is generally effective for slit and unslit paper, nonwovens, and textiles.

Shaft Extraction/Insertion System. On duplex and simplex slitter/rewinders, webs are slit and rewound on cores supported by rewind mandrels. Rewind mandrels may be extremely heavy, i.e., several thousand pounds (kilograms), or cumbersome to handle manually. Each machine cycle requires that a rewind mandrel be loaded up with cores, put into the rewind station, removed from the rewind station, and then extracted from the rewound rolls. This process might take place many times a day, and an operator might have to lift and maneuver many tons of rewind mandrels per shift. Apart from the burden on the operator, manual shaft handling hinders production, because the cycle time for loading and unloading is relatively long.

The use of a shaft extraction/insertion system minimizes cycle time as well as operator fatigue. With this concept, the finished rolls and rewind mandrels are transferred to a lift table where shaft extrators pull the rewind mandrel from the rolls. The shaft is supported in the extracted position until the rolls are removed from the extractor table. Fixtures called core boxes are sometimes engineered into the extractor table to locate cores in their proper positions. The extractor inserts the shaft back into the cores. The cored shafts then are brought back into the rewind stations.

Shaft extractors are easily interfaced in close proximity to turret winders, unwinders, and other simplex winders, which often require the handling of steel shafts 6–10 in. (15–25 cm) in diameter by several hundred inches (several meters) long.

Handling Systems for Duplex Rewinders. A duplex slitter/rewinder (see Figure 1), with the rewind stations

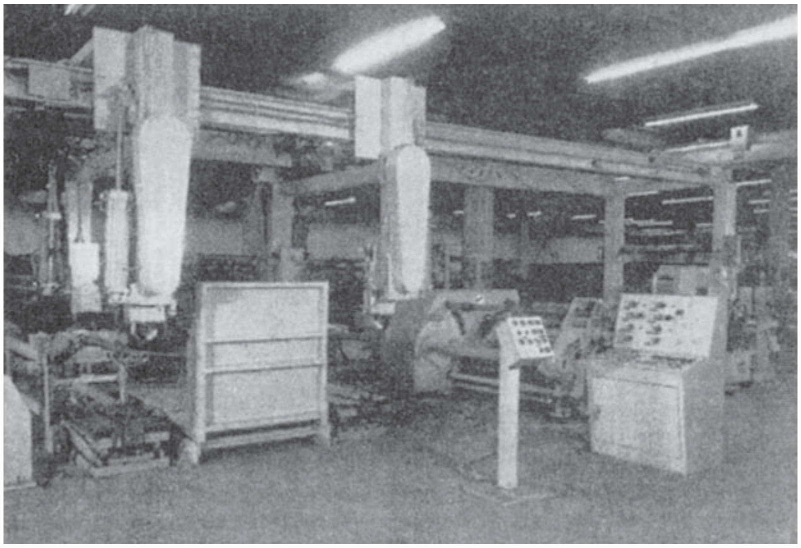

Figure 2. A slitter/rewinder roll-handling system with a shaft-type unwind stand. This two-motor drive system has an adjustable vacuum winding capability and an overhead mandrel lift/transfer mechanism.

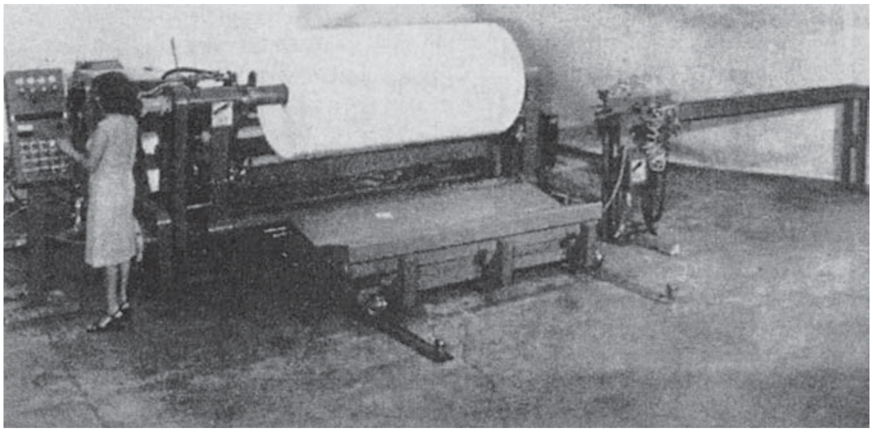

Figure 3. A surface center slitter/rewinder with hydraulically pivoting rewind arms, preset constant surfacing pressing in the center surface rewinding mode, and an automatic minimum gap for center winding.

located above the main machine, interfaces well with an overhead roll-handling system. After the rewind cycle, the shafts with the rewound rolls are lifted out and the new shafts with cores must be inserted into the machine.

A typical system (see Figure 2) may have an overhead-powered carriage that supports dual vertically adjustable shaft-clamp assemblies. With two clamps for each vertical lifting mechanism, new shafts with cores can be loaded into the machine immediately after the shafts with the finished rolls are removed. In other words, a machine with two rewind stations has four shafts circulating through the system simultaneously. As the new rewind cycle begins, the shafts with rolls are conveyed overhead to the shaft extractors where the slit and rewound rolls become free of the shafts and may be upended on pallets for conveyor or forklift removal into storage.

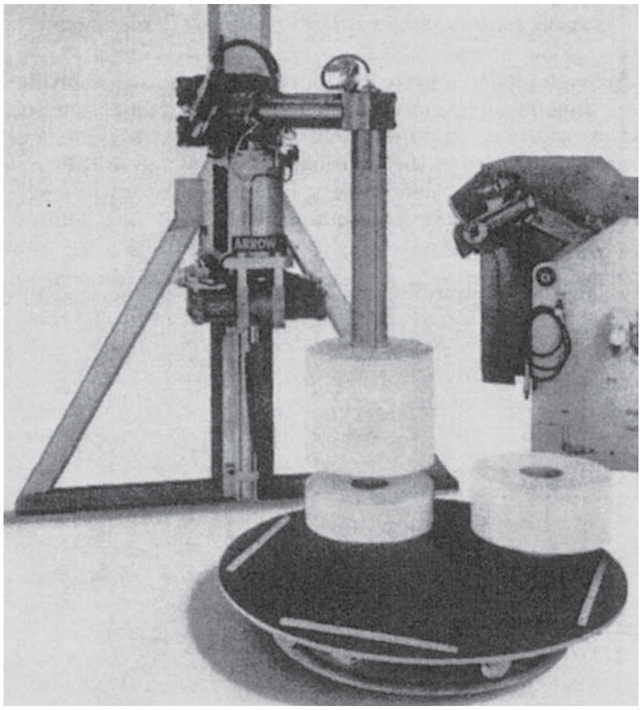

Figure 4. A roll unloading and stacking robot with hydraulically controlled cantilever mounted boom with 90° rotational capability on vertical and horizontal axes for pallet offload.

Floor Loading and Unloading. Floor loading and unloading features are available as an integral part of many unwinds and simplex rewinds. These units use hydraulically pivoting arms to raise and lower rolls to the floor. The need for auxiliary equipment is eliminated. Lift tables, shaft extractors, and upenders are designed to work with simplex (single-position) rewinders that produce large-diameter rolls of paper, laminates, and nonwovens (see Figure 3). Driven "V"-trough conveyors can then move the rolls from the rewinders to weighing stations, stretch wrapping, and storage conveyors.

Robotic Roll Handling. An example of robotics in special-purpose roll handling is shown in Figure 4. A simplex slitter/rewinder with an automatic roll pusher pushes the slit and wound rolls onto the robot shaft. The robot shaft then expands to lock the cores to the shaft. The robot is programmed to shift the axes of the rolls 90° and to automatically position them over a pallet. A rotary table supports the pallet and will index every 90° to allow unloading of finished stacks of rolls in the four quadrants of the pallet.

Total Automation. The ultimate in roll handling is shown in Figure 5. This slitter/rewinder for duct tape automatically cuts cores, loads cores at their proper location on dual rewind shafts, feeds the loaded shafts into rewind stations, winds the slit tapes, unloads the rewound

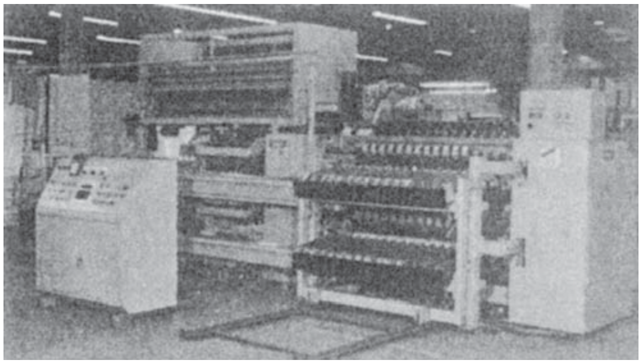

Figure 5. A fully automatic, pressure-sensitive tape turret slitter/rewinder with automatic core cutter and loader.

rolls from the machine, and feeds the empty shafts back in for core loading. This completely "hands-off" machine is microprocessor-controlled. Cycle times are better than 30 s.

REFERENCES

"Roll Handling" in R. E. Mastriani, ed. *Wiley Encyclopedia of Packaging Technology*, 1st edition, Arrow Converting Equipment, Inc., pp 571–573.

ROTATIONAL MOLDING

Phil Dodge
Quantum Chemical Company
Cincinnati, Ohio

Reusable, large industrial containers can be made by rotational molding. Rotational molding generally is not thought of as a technique for making packaging. However, some manufacturers use this process, which can make complex, hollow, and seamless products of all sizes and shapes to produce large bulk containers for shipment of powders and liquids, 5–55-gal drums, trash and recycling containers, insulated food-product containers, and double-wall shipping trays for equipment components.

ADVANTAGES

Compared with blow molding or thermoforming, rotational molding offers significant advantages:

- Mold costs are low and comparable with those for blow molding and thermoforming.
- The process is economical for short production runs.
- Secondary tooling is minimal or not needed.
- There can be little or no scrap.

Numerous design features are possible; for example, double-walled parts, good surface detail, intricate contours and undercuts, stress-free parts, minimal cross-sectional deformation and warping, and molded-in inserts can be used.

POLYETHYLENES MOST WIDELY USED

Generally, powdered resins are used in rotational molding. However, a few liquid resins are available and some high-flow resins, such as nylons, have been used in small pellet form.

Although many thermoplastics can be rotationally molded, only a few actually are used to make commercial products. Polyethylenes—low-density (LDPE), linear low-density (LLDPE), high-density (HDPE), and copolymers—are the most widely used materials (see also Thermosetting polymers).

LLDPE rotational molding grades typically have densities ranging from 0.935 to 0.940 g/mL and a melt index (MI) of 3–10 g/10 min. LLDPE rotational molding resins offer good stiffness and low-temperature impact strength, excellent environmental stress-crack resistance (ESCR), and warp resistance.

LDPE rotational molding grades generally have densities of 0.915–0.920 g/mL and an MI of 10–25 g/10 min. LDPE rotational molding resins offer good impact strength, low shrink-age, good warp resistance, and flexibility.

HDPE rotational molding grades have densities of 0.942–0.950 g/mL and an MI of 2–8 g/10 min. HDPE rotational molding resins offer high stiffness, high impact strength, and excellent chemical resistance.

Ethylene-vinyl acetate (EVA) copolymers for rotational molding have densities of 0.925–0.945 and an MI of 10–25 g/10 min. EVAs offer good low-temperature impact strength and flexibility.

Postconsumer polyethylene resins (PCR) are made from HDPE blow-molded containers. HDPE PCRs have much lower melt indices than the MI of typical rotational molding resins. Therefore, for rotational molding, a HDPE PCR is blended with a virgin resin. HDPE PCR content in blends can range between 10–25%. The blends can be made by either melt compounding or dry blending PCR/virgin blends.

How the PCR/virgin resin blend is prepared affects the inner surfaces of rotationally molded parts. Parts rotationally molded from dry blends can have very rough inner surfaces. Parts made from HDPE PCR/virgin resin extrusion blends exhibit smooth inner surfaces.

The color of parts rotationally molded from HDPE PCR/virgin resin blends will be influenced by the type of HDPE PCR in the blend. Because some HDPE PCR are green (e.g., PCR based on HDPE copolymers), rotational molding resins made with these resins have a green tint. Other HDPE PCR are gray and have black specks. Thus, parts rotationally molded from blends made with these HDPE PCR have a dirty white color.

Compared to the virgin LLDPE resin, the toughness of HDPE PCR/virgin resin blends is much less, and it decreases as HDPE PCR content increases.

The environmental stress-crack resistance (ESCR) of HDPE PCR/virgin resin blends is considerably lower than that of the virgin polyolefin resins.

Crosslinked polyethylene rotational moldings can be made by using materials that contain a chemical crosslinking agent. Crosslinking improves physical properties, in particular impact strength, dimensional stability, creep resistance, and environmental stress crack resistance (ESCR).

Polyethylene rotational moldings also can be crosslinked using electron-beam treatment. Electron-beam processing allows the degree of crosslinking to be controlled; therefore, the level of property improvements can be controlled. Also, parts can be recycled before they are subjected to the EB treatment. Thus, scrap losses are reduced.

Polypropylene rotational molding resins provide higher heat resistance (containers can be autoclaved) and have higher stiffness than polyethylenes. Reactor-produced poly propylene copolymers (TPOs), i.e., copolymers produced in a reactor, have not been subjected to the mechanical and thermal degradation associated with melt blending of rubber compounds into a polypropylene base. Other advantages of the reactor-produced TPOs include their inherent temperature and chemical resistance, low specific gravity, and high flexibility. Also, unlike rubber blends—which can degrade or crosslink—the reactor-produced TPOs are readily rotationally molded.

Nylon rotational molding resins, both liquid and pellet, offer good heat resistance, toughness, good wear and abrasion resistance, high strength and stiffness, and good chemical resistance.

Polycarbonate rotational molding resins offer high heat resistance, good impact strength, and clarity.

Vinyl rotational molding resins, both powder and liquid, are available. Vinyl plastisols are liquid rotational molding resins that offer a wide range of stiffness, from very soft (low-durometer) to very rigid (high durometer).

A SIMPLE, BUT VERSATILE PROCESS

Six basic steps exist to the rotational molding process and are as follows:

1. A predetermined amount of resin is placed in the bottom half of a two-piece mold.
2. The mold halves are closed.
3. The mold is placed in a heated oven and rotated biaxially.
4. The resin melts against the inside surface of the mold, fuses, and then densifies into the shape of the mold cavity.
5. The mold is removed from the oven and placed in a cooling chamber. A combination of air and water is used to slowly cool the mold.
6. The mold is transferred from the cooling chamber and opened, and then the finished part is removed.

Many variations exist of the basic rotational molding process.

Generally, the walls of rotational moldings are made of one material. However, multilayer rotational moldings can be made. For example, there can be a foam layer, a solid layer, a layer of recycled material, a crosslinked layer, and different-colored layers.

The standard technique for making multilayer rotational moldings is to use a “dump box.” After the first layer is molded, the dump box—which is attached to the mold—is opened to allow the material for the second layer to enter. The dump-box cover is closed, and the second layer is molded.

Foam filling, which uses rigid polyurethane foam, injected into the hollow space between the walls of rotational moldings adds stiffness and structural strength.

Integral skin foam moldings also are possible with resins that contain foaming agents. These one-step foaming resins expand inside the mold, and the material directly against the mold surface forms a dense skin. This approach to multilayer foam molding is faster than other techniques, and tooling costs are less.

Molded-in decoration also is possible with rotational molding. By embedding a graphic into the surface of a rotational molding, the graphic becomes permanent and will not peel and cannot be scratched or rubbed off. Molded-in graphics eliminate surface pretreating required with other decorating methods. Also, no paints or painting equipment are required.

Precolored polyethylene powders save rotational molders from the hassle of dry-blending pigments with natural-colored resin powder.

Rotolining is a process that chemically bonds a reactive polymer to the inner surface of hollow metal products. The metal product is mounted on the rotational molding arm as opposed to a mold.

SEVERAL TYPES OF EQUIPMENT

Many different types of rotational molding equipment exist.

Open-Flame and Slush Molding Machines. These machines (Figure 1), which are the oldest type of equipment, usually rotate on only one axis. This equipment is used mostly to produce open containers.

Carousel Machines. These machines (Figure 2) are the most common type. Carousels consist of a heating station or oven, a cooling station or enclosed chamber, and a loading and unloading station. The carousel can have three to six spindles or arms for mounting molds. Most carousels have the freedom to rotate in a complete circle.

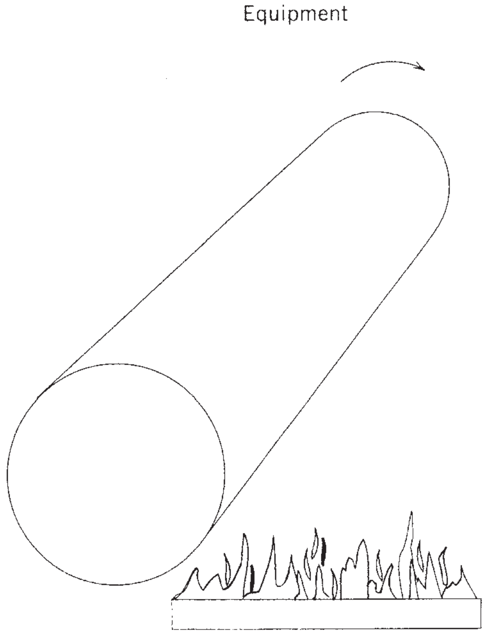

Figure 1. Rotational-molding equipment.

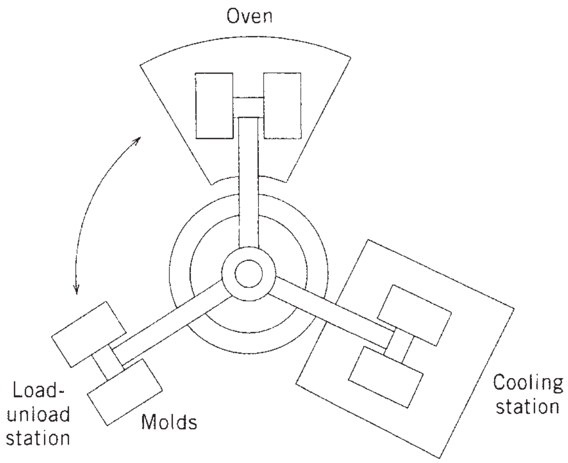

Figure 2. Carousel/turret machines have a center pivot with three, four, or five arms that hold molds. The arms index simultaneously from station to station, i.e., load/unload station, to oven and to cooler.

Clamshell Machines. These machines (Figure 3) have only one arm, and the heating, cooling, and loading/unloading stations are all in the same location.

Rock-and-Roll Machines. These machines (Figure 4), which rotate on one axis and tilt on another, are used for long items.

Shuttle Machines. These machines (Figure 5) generally are used to make large parts. A frame for holding one mold is mounted on a movable bed. The bed is on a track that allows the mold and the bed to move into and out of the oven. After the heating cycle is complete, the mold is moved into an open cooling station. A duplicate bed with a mold is then sent into the oven from the opposite end.

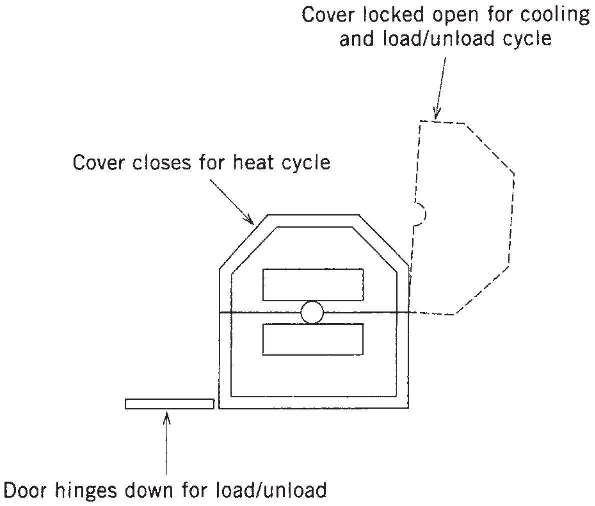

Figure 3. Single-station machines, also called clamshell machines, have an oven that has a hinged cover and a hinged front panel. The mold rotation arm can swing into and out of the oven. The cover and front panel are closed during heating and are opened for part cooling, removal, and reloading of the mold.

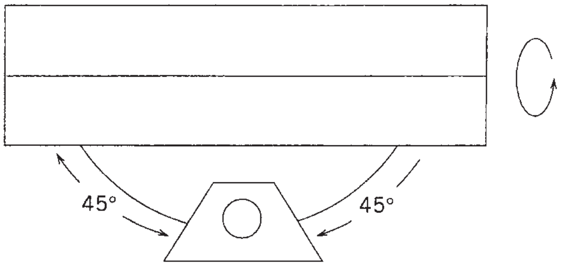

Figure 4. Rotational moldings with long length:diameter (L/D) ratios can be made on equipment called “rock-and-roll machines.” The mold is rocked back and forth on a stationary, horizontal axis while it is rotated about a moving axis that is perpendicular to the rotating axis.

RECENT TRENDS

Considerable progress has been made in recent years to improve processing controls. Microprocessors, which indicate processing set points and conditions, greatly improve precision. Mold-cycle data for the oven and cooling chambers can be stored for future production of parts. Cycle time, oven temperature, major and minor axis speeds, as well as fan and water-spray times are other functions under computer control. New temperature-monitoring systems also are available.

A key benefit of rotational molding is the low relative cost of its tooling. Cast aluminum molds are most frequently used, especially for small-to-medium-sized parts. Cast aluminum has good heat transfer and is cost-effective when several molds for the same part are required.

Sheet-metal molds are normally used for larger parts. These molds are easy to make because sections can be welded together. Other molds, such as electroformed and vapor-formed nickel molds, yield an end product with fine detail. Cost for these is typically higher.

To assist in part removal, most rotational molds require a mold-release agent, which is either baked or wiped on. Many molds now use a fluoropolymer coating to eliminate the use of mold release. Also, waterborne release agents,

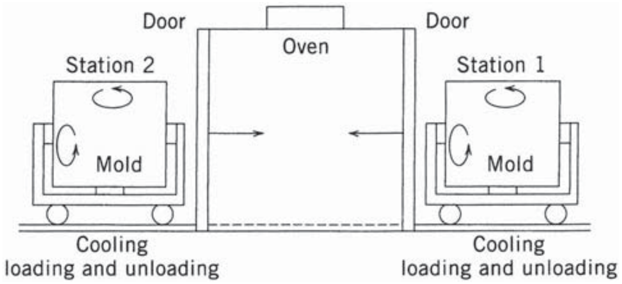

Figure 5. Shuttle machines either move the mold, along an oval or straight track, from the load/unload station, to the oven, and to the cooling station.

as a result of the U.S. Clean Air Act of 1993, are being used in place of CFC- and solvent-borne release agents.

FUTURE TRENDS

The ability of rotational molding to economically make large, complex, hollow, and seamless products is becoming more interesting to the industrial packaging industry. Other attractive advantages of this process are its ability to economically make low-volume production runs, the wide range of resins that are available, and its multilayer capabilities.

The rotational molding industry is growing rapidly. At present, well over 200 rotational molding plants operate in the United States.

Rotational molding technology is constantly improving. Many new developments in rotational molding materials are announced each year.

A great deal of technical information is readily available about rotational molding from the Association of Rotational Molders. The industry organization offers many technical brochures and copies of recent technical papers.

SEALING, HEAT

Barry A. Morris
DuPont Packaging and
Industrial Polymers,
Wilmington, Delaware

Duncan Darby
Packaging Science, Clemson
University, Clemson,
South Carolina

Most flexible and semirigid packaging structures use thermoplastic resins in their construction. When energy is applied, the thermoplastic resins melt and fuse together to form a seal. A heat seal can be defined as a method of closing a package using a thermoplastic material whose temperature is elevated by some addition of energy that results in heat. It is commonly accepted that, to achieve a seal, heat (energy), time and pressure are required. Energy is required to cause softening of the resin, pressure is required to bring the surfaces into intimate contact, and time is required to allow the heat transfer and molecular motion. How the energy and pressure are supplied to the seal area is what distinguishes the different methods of sealing. This article describes how the energy and pressure are supplied in flexible and semirigid packaging in order to achieve acceptable seals.

Flexible packaging materials can be classified into two categories: multilayer packaging materials (see Laminating; Multilayer flexible packaging) and monolayer films (see Films, plastic). Multilayer materials include laminations and coextruded films. Monolayer films consist of just one thermoplastic material. Coextrusions consist of multiple thermoplastic layers. Laminations are multilayer constructions of thermoplastics and/or nonthermoplastics, including thermoplastic layers for sealing purposes.

When laminated flexible materials are to be sealed, the outer face of the material is generally nonthermoplastic (such as paper or paperboard) or a thermoplastic with a melting point sufficiently higher than that of the sealant. Likewise, the outer face of a coextruded film used for sealing may be a thermoplastic with a melting point higher than that of the sealant. In both cases, this makes it possible to apply a heated bar (or other heated tooling) directly to the outer face in order to get the energy to the sealing interfaces and join the two package members. Heated tooling cannot usually be applied directly to monolayer unsupported films because they melt and stick to the surface of the sealing bar. The seal area is destroyed in the process. For this reason, other methods of sealing (impulse sealing, hot knife sealing, etc.) are used to seal such materials.

If the package members are too thick and too insulating, other means must be used to get energy to the sealing interfaces. Since heated tooling (commonly known as hot bar) sealing uses the least expensive equipment, it is more widely used for sealing than any other method. The other methods described below are used in applications where bar sealing is not suitable. When sealing thin materials together, it may be sufficient to introduce heat from one side of the construction. When using thicker materials, or if higher speeds are required with thinner materials, heat may be introduced from both sides. The fundamental principles in heat sealing are to provide heat at the interfaces, provide pressure to bring them intimately in contact, and complete a weld, all within an acceptable time period. An exception to this is one of the forms of radiant sealing, which relies on film orientation and surface tension as a substitute for applied pressure. Most of the important sealing methods are listed in Table 1.

From a polymer science perspective, the heat seal process consists of several steps. When the materials are first brought together, the surfaces are rough on a molecular scale and no adhesion occurs. As the heat reaches the interface, the surface begins to melt. The melting helps smooth the surface and, along with the application of pressure, creates more intimate contact for wetting and bonding. With sufficient time and temperature, molecular segments may diffuse across the interface. The nature of the attractive forces between molecular segments dictates the amount of diffusion that is needed to build strength at the interface. For nonpolar sealants such as polyethylene, it is believed that enough diffusion must take place for the segments to entangle. When polar forces are present, as in EVAs, acid copolymers, and ionomers, less diffusion is needed because hydrogen bonding and ionic forces help build strength. After the heat is removed and the interface cools down, co-crystallization may also help enhance the seal strength.

During heat sealing, the weight of the product being packaged or other forces (such as the natural spring-back force of a gusseted area) may act to open the seal before it has had a chance to solidify. The resistance to opening forces while the seal is still hot is known as hot tack. Hot tack strength is a function of (a) how much molecular diffusion and entanglement has occurred in the seal area and (b) the melt strength of the polymer. Sealants with outstanding hot tack strength such as ionomers (see Ionomers) may also have high hot tack strength over a broad sealing temperature range. This can be important for a variety of sealing operations with variable line speeds and poor control of seal bar temperatures.

HEATED TOOLING SEALING (COMMONLY CALLED HOT BAR SEALING)

Heated tooling sealing is the most widely used method for sealing. It is commonly called hot bar sealing or bar sealing, but there are many different geometries beyond the bar that use heated metal to affect the seal. Seal tooling geometries include flat bars, serrated bars, rings, rectangular shapes, flat or shaped platens, heated rollers,

Table 1. Sealing Methods

Bar	*Concept:* Jaw sealer with one or two heated opposed bars. *Applications:* Manufacture and closing of laminated pouches, cup lidding, form/fill/seal packaging (e.g., potato-chip bags).
Band	Concept: Two moving bands backed by heated and cooled metal jaws. *Applications:* Sealing filled pouches, including those made from unsupported materials.
Impulse	*Concept:* Jaw sealer backed with resilient silicone rubber. Electric current flows through Nichrome ribbon stretched over one or both surfaces and covered with high-temperature release film or fabric. *Applications:* Sealing tacky materials, unsupported thermoplastic films (eg, frozen vegetable bags).
Wire or knife	*Concept:* Hot wire or knife seals and cuts film. *Applications:* Bagmaking and bagclosing; overwrap for toys, records.
Ultrasonic	*Concept:* Tooling hammers or rubs materials together at high frequency, generating heat for sealing. *Applications:* Sealing biaxially oriented films, thick webs, aluminum foil, rigid container components.
Friction	*Concept:* Frictional heat generated by rubbing components together generates heat for sealing. *Applications:* Assembly of round containers, sealing ends of strapping.
Gas	*Concept:* Hot air or gas flame applied to both surfaces and removed; molten surfaces are then pressed together. *Applications:* Manufacture and closing of polyethylene-coated paperboard milk containers.
Contact	*Concept:* Plate is placed between surfaces to be sealed and is then withdrawn, and the molten surfaces are pressed together. *Applications:* Sealing ends of strapping, tubing.
Hot-melt	*Concept:* Continuous strip or dots of hot, molten thermoplastic sealant are applied between two surfaces just before pressing them together. The hot melt contains sufficient heat to effect seal, and surfaces absorb heat to cool melt rapidly. *Applications:* Paperboard containers, peelable seals, case packers.
Pneumatic	*Concept:* Heated film is sealed to another surface by application of air pressure. *Applications:* Skin packaging.
Dielectric	*Concept:* High-frequency electric field melts materials held under pressure. *Applications:* Unsupported PVC, PVC-coated paper (not for polyolefins).
Magnetic	*Concept:* Gasket with iron-containing compound pressed between surfaces, assembly placed in magnetic field. *Applications:* Heavy-gauge polyolefins (e.g., cap liners or lids).
Induction	*Concept:* Alternating current is induced in metallic foil, usually aluminum, which heats and melts surfaces pressed against the foil. *Applications:* Tamper-evident closure liners; lids.
Radiant	*Concept:* Infrared radiation sealing without pressure. *Applications:* Sealing uncoated highly oriented films and nonwovens, including polyester, nylon, and polyolefins.
Solvent	*Concept:* Solvent liquefies surfaces that are then pressed together. *Applications:* Sealing configurations where heat may degrade the thermoplastic or is not practical to apply.

and others. This type of sealing is used to make and seal pouches, as well as for sealing lidding to blisters, cups, and trays in form fill and seal equipment.

When very long seals are to be made, it is essential that the seal bars be designed to avoid any deflection in order to ensure uniform pressure throughout the length of the seal. Since it is important to avoid wrinkles in seals, means are frequently provided to stretch out the seal area of the packaging materials in order to ensure that they are flat when sealed. Another approach is to have mating serrations incorporated into the seal bar faces, which will stretch the packaging materials, and, hopefully, remove any wrinkles. Care must be taken to ensure that the serrations do not puncture the films during sealing. Serrated bars are used where good mechanical strength is required and the risk of some tiny leaks in the seal can be tolerated.

When hermetic and/or liquid-resistant seals are desired, they can be made by a flat-faced heater bar, opposed by a bar that has a resilient surface. Silicone rubber is generally used for this purpose. It is best if the resilient surface is curved when viewed from the end of the seal bar. When the bars come together, they first create a line of pressure throughout the length of the seal bar. As the bars

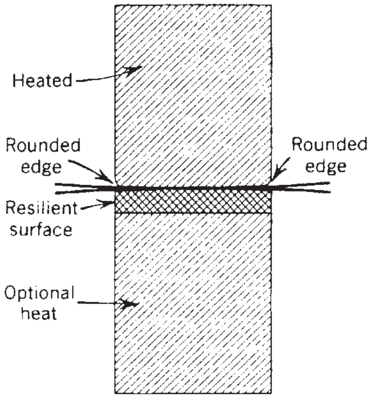

Figure 1. Bar sealer.

close further, this line broadens into a band. The pressure along the initial line is at a maximum and at a minimum along the edges of this band. This ensures that the optimum sealing pressures are present somewhere in between. In the event that drops of liquid are in the seal area, this pressure profile expanding from a line will tend to push these droplets out of the seal area. If the droplets contain water and they are not pushed out of the seal area, they become steam and rupture the seal. As an alternative to curving the section of the resilient bar, the heated metal bar can be curved. This is generally not done since it is more difficult to maintain a curved section than a flat section on a metal seal bar. It is also important that the edges of metal seal bars be gently rounded to avoid puncturing the packaging materials. Figures 1 and 2 show the best constructions used for straight seal bars.

Heated tooling sealing is also used for applying lidding to cups and trays. The upper heated tool is shaped to match the shape of the rim of the container being covered. The bottom tool is shaped to fit under the rim and support the container. In order to assure good seals, it is essential that uniform seal pressure be obtained around the entire rim of the container. Factors contributing to nonuniform pressure are variations in the thickness of the rim of the container and warping of the opposed sealing tools. Using a resilient sealing surface under the rim of the container can correct these deficiencies. Another approach is to design the rim of the container to be curved upward in section. When the seal is made, this curved rim deflects much like a resilient backup member.

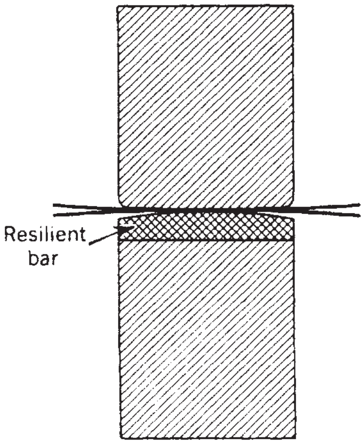

Figure 2. Rounded resilient bar.

For some applications, continuous seals can be made by passing materials between heated rollers. Unfortunately, the dwell time for actual sealing under pressure between rotating rollers is extremely short. Rotary sealing works well for low-speed machines and for highly conductive materials, as well as in applications where preheating can be utilized.

Modern heated tooling systems use thermostatic controls, maintaining a constant temperature in the tooling. Rheostatically controlled systems on older lines still exist, but for packages with thermoplastic outer layers, thermostatic control offers better performance.

Heated tooling sealing is by far the most common form of sealing. This is due to (a) the low costs of resistance heaters and steel and (b) the versatility with respect to seal shape. The most important disadvantage of heated tooling sealing is the fact that the seal leaves the tooling with residual heat. If any pressure is exerted on the seal after it is made, the still-molten polymer in the seal area can creep, even to the point of opening. In this type of situation, the hot tack of the polymer becomes important.

HOT-WIRE AND HOT-KNIFE SEALING

Hot-wire and knife sealing are similar to heated tooling sealing in that the seal system is heated by resistance-type heaters. The wire (or knife) is mounted in or on the surfaces of a heated bar and is heated by conductive contact with the bar. The relatively small surface of contact causes all of the force of sealing to be transmitted through a small area, thus pressure in the seal area becomes very high. High temperatures, along with these high pressures, allow this type of sealing system to be an effective cutting method, as well as a sealing system. Hot wire and hot knife sealing are adaptable to very high-speed operations and are used for both sealing and cutting apart polyethylene bags on bag-making equipment (see Bags, plastic). Unsupported films, when trim sealed by this method, tend to form a strong bead in their seal areas due to surface tension and orientation. This method is also used to a limited degree with laminated constructions. Hot-wire cutoff is also used in film-dispensing equipment and with L bar sealers used on shrink-wrapping machines.

BAND SEALING

In band sealing, a filled pouch is introduced between two moving bands, which are pressed together by heated bars (see Figure 3). The heat passes through the bands and into the pouch material, softening it for sealing. As the pouch continues along between the bands, the bands are next pressed together by chilled bars that withdraw heat from the pouch seal through the bands. The bands then progress to release the pouch. Band sealing is fast and widely used

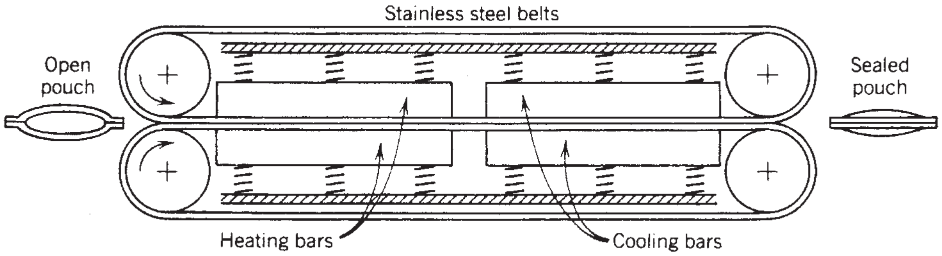

Figure 3. Band sealer.

for closing pouches filled with product. It is important that the pouch mouth be flattened before entering the bands if wrinkles in the seals are to be avoided. Band sealing provides a continuous method for sealing, avoiding the problems found in sealing between rotating heated tooling sealers. It also provides cooling for the seals, overcoming the main disadvantage of heated tooling sealing.

IMPULSE SEALING

Impulse sealers have the same general configuration and mechanical construction used for bar sealers. The difference between the two systems lies in the sealing jaws (see Figure 4). Each of the opposed jaws in an impulse sealer is generally covered with a resilient surface, such as silicone rubber. A taut Nichrome ribbon is then laid over the resilient jaw and covered with an electrically insulating layer of thin heat-resistant material, such as silicone-rubber-coated fiberglass, Teflon® fluoropolymer-coated fiberglass, or Teflon®-coated Kapton® polyimide film (DuPont). A pouch mouth is placed between the jaws, and the jaws are closed. An electric current passes through the Nichrome ribbon for a brief period of time and is then turned off. While the seal jaws remain closed, heat is withdrawn from the pouch mouth and the ribbon through the resilient jaw surfaces, as well as through the jaws. Next, water recirculating through a tube behind the impulse ribbon cools the plastic to set the heat seal. The jaws are then opened and the sealed pouch is removed. This permits the sealing of constructions that have low hot tack. It also permits the sealing of unsupported thermoplastic materials, which would stick to heated bars and pull the seal open when heated bars are opened.

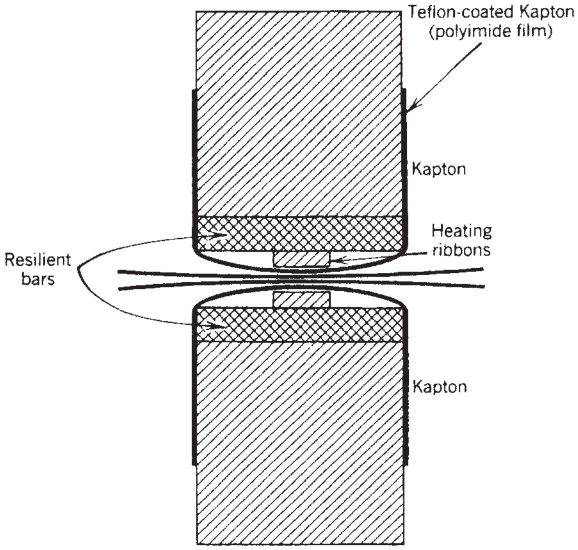

Figure 4. Impulse sealer.

The advantage of impulse sealing over heated tooling sealing is that the seal is cooled to achieve adequate strength before the jaws are opened. The material that covers the Nichrome ribbon has release properties, so that it does not stick to unsupported thermoplastics or to many of the coatings that are used on the outside of packaging laminations. Such coatings include PVDC, ink, and varnish. Although impulse sealing does not have the versatility of heated tooling, some vendors offer shaped impulse-sealing ribbons for securing lids to cups and trays.

The dominant drawback of impulse sealing is high maintenance cost. The impulse ribbons slowly deteriorate and the release coverings over the ribbons degrade, requiring frequent replacement. On a production basis, impulse sealing should be used only where heated tooling sealing does not do the job properly. Additionally, impulse sealing is less versatile than heated tooling sealing. Since impulse sealing applies current across both ends of a wire or ribbon, this system does not lend itself well to round or rectangular sealing systems, and it is not really suitable for platen sealing.

ULTRASONIC SEALING

In ultrasonic sealing, the sealing energy is transmitted to the seal interface by mechanically hammering or rubbing the packaging materials together at high (ultrasonic) frequencies. Frequencies typically range between 20 and 40 kHz. The mechanical energy transforms to heat at the interface through friction, viscoeleastic response, or some combination of the two. This type of sealing is useful to seal materials that are too thick to permit conductive heat transfer through them for sealing. Ultrasonic sealing has been proven to be a good system for sealing through contamination. Because the seal tooling is not heated, the system also offers advantages over heated tooling sealing with respect to cleaning. If a product gets on an ultrasonic sealing horn, it does not oxidize. Ultrasonic welding is the only method used for welding aluminum foil in its production.

The energy delivery in ultrasonic systems begins with a converter, which uses piezoelectronics to convert electrical energy into mechanical energy. The vibrations are then transmitted through a stack and into the horn. The horn is analogous to the sealing tool in other forms of sealing in that it is the surface that contacts the sealable packaging. Like heated tooling sealing, ultrasonic sealing is versatile with respect to shape. It can be used for pouches, cartons, cup/lidding, tray/lidding, and blister/lidding systems. Some tooling limitations exist for very long seals, although some ultrasonic sealer manufacturers can compensate with multiple converter/stack systems driving a single horn.

The biggest disadvantage to ultrasonic sealing is its cost. The seal tooling (horn) must be carefully designed to properly transmit the mechanical energy to the sealing interface. These tools are typically designed using finite element analysis. When a tool is worn or damaged, restoring its performance requires precise milling. Additionally, the tooling systems must, of course, be resilient with respect to high-speed vibration. This cost is justifiable in some applications and not in others.

FRICTION SEALING

Friction sealing is the name of a family of sealing systems that utilize mechanical energy resulting in friction as the energy source. In spin welding, the top and bottom halves of cylindrical containers may be easily joined. The bottom member is held against rotation by a friction brake; the top member is pressed against the bottom member and rotated. The heat generated by friction at the interface between the two halves melts their surfaces, and the viscous interface causes the bottom half to rotate in unison with the upper half. This produces the seal. Thermoplastics with surfaces that become somewhat slippery when heated are best suited to friction welding. Thermoplastics that become dough-like present problems. A thermoplastic with a very low coefficient of friction may not generate enough friction to be a viable candidate for spin welding. Spin welding is generally the most economical way to make spherical shapes for packaging. It is also used to manufacture two-piece cups.

There are other forms of friction welding used in packaging. Seals are also made between the ends of package strapping, which are rubbed together at high speed until the interface melts, causing them to weld. Friction welding is also used to manufacture plastic pallets.

HOT AIR/HOT GAS/FLAME SEALING

Hot air and hot gas sealing can be used in applications where paperboard and thicker thermoplastic materials offer too much resistance to the conduction of sealing heat. In this case, heat is applied directly to the surfaces to be sealed by a gas. The gas may be hot air, a more inert heated gas (nitrogen or CO_2), or a gas flame. An important application of this method is the manufacture of paper containers for dairy products. Closing sealable tubes after filling is another application where hot air sealing is commonly used. Hot air sealing can also be used to seal bags of landscaping goods, due to the thickness of the material and the risk of damage to the seal jaws. The primary advantage of these sealing techniques is the ability to heat the sealable surface without dependence on the conduction of heat. The main disadvantage of this type of sealing is the risk of overheating and oxidizing the sealing surfaces.

In flame sealing, a gas flame is played on the surfaces about to be sealed, after which they are clamped together between chilled bars. Hot air and hot gas sealing utilize the same technique, but use heated gas rather than flame. Sufficient sealant must be used on the surfaces in order to fill all the fissures formed at the joints in the paperboard.

CONTACT SEALING

Another technique to heat the sealing surface rather than depend on conduction is contact sealing. In this case, one or both of the sealing interfaces are contacted by a heated surface before being pressed together. This technique replaces the forced convection heat transfer of hot air or hot gas sealing with conductive heat transfer. The heated surfaces include plates, flat bars, tapered bars, and even shaped tooling. This has been used for strapping as an alternative to friction sealing. Some modern fitment sealing machines use this technique for preheating the surface of pouch fitments before they are sealed to the pouch material. The main disadvantage of this sealing process is tacking of the sealant materials to the heated surface. PTFE coatings may be employed to prevent this.

DIELECTRIC SEALING (ALSO KNOWN AS RF SEALING)

In dielectric sealing, used with polar materials such as PVC and APET, a high-frequency electric field generates heat for sealing. The members are pressed together between a cold bar, generally made of brass, and a cold flat metal surface. An alternating electric field is generated between the bar and the lower surface. The field alternates at several megahertz, hence the “radio frequency” name. The dipoles in the polymers vibrate in response to the alternating electric field. Molecular resistance to the vibration, which is pronounced in large molecules such as polymers, causes the energy to dissipate into heat and ultimately melt the polymer. The main bodies of the members are kept cold to withdraw any residual heat from the materials that have been sealed. This technique is commonly used for sealing of theft-prevention clamshells found in the electronics departments of retail stores.

The primary disadvantage of dielectric sealing is the requirement for a polar molecule. Nonpolar materials such as polyethylene and polypropylene do not respond adequately to an alternating electrical field.

INDUCTION SEALING (ALSO KNOWN AS RF SEALING)

Induction sealing utilizes the property of some metals to heat inductively, using an alternating magnetic field. The magnetic field is alternated in polarity at radio frequencies. The magnetic field induces electric currents in the metal. The metal resists the flow sufficiently to heat resistively, eventually building enough temperature to conduct out of the metal and into nearby thermoplastic sealing materials.

A common use of induction sealing is to produce a tamper-evident seal over the top of a bottle. The aluminum foil-based cap seal is generally incorporated under the closure liner (see Closure liners). The assembly is placed in the alternating field, and a current is induced in the foil. This current heats the foil, and energy is conducted into the sealant, sealing it to the bottle.

In another variant of this type of sealing, a gasket, shaped to fit between the sealing faces of the two package members, is made from the same thermoplastic as the package, but has milled into it an iron-containing compound that has a high hysteresis loss. The package portions are pressed together with the gasket between their sealing surfaces and placed in a magnetic field oscillating at a frequency high enough to melt the gasket. This, in turn, melts the sealing surfaces and causes them to weld together. As an alternative to a gasket, an iron-containing material can be pre-applied to one or both of the sealing surfaces, producing the same result.

RADIANT SEALING

There are two completely different techniques that can be classified as radiant sealing. The first is similar to hot air/hot gas sealing in that the packaging material is heated and then subsequently subjected to pressure. This type of radiant sealing is typically used to close pouches on high-speed horizontal form fill and seal lines such as those used to package sugar. The top seal travels between two radiant heat bars to soften the polymer. At the end of the radiant heating zone, two crimp wheels close the package. The radiant heat bars are set much higher in temperature than that needed for conductive heating due to the lower effectiveness of radiant heating. These high temperatures and the fact that the material is not supported in the radiant heat zone means that some sort of thermally stable material needs to be part of the construction. Typically on this type of machine, paper is contained in the structure.

In the other form of radiant sealing, the two surfaces are held in contact by two cooled jaws with ends of the material extending beyond the jaws. These exposed ends are subjected to radiant heat to the point of fusing the package closed. This form of radiant sealing makes it possible to seal many materials used in packaging that might be considered either difficult or impossible to seal without coatings (see Figure 5). Polyester film (see Film, oriented polyester), long used in packaging constructions and many nonwoven (see Nonwovens) materials, can be sealed by this method. These include: Tyvek® (DuPont), a nonwoven polyolefin used in packaging and for protective garments; Reemay®, a nonwoven polyester, used in filters; Cerex®, a nonwoven nylon, used as a carpet backing and in filters; and nonwovens made from polypropylene and other base materials. This method can also used for sealing other oriented films, such as polypropylene and polyethylene. OPET pouches are commercially made for document preservation. OPET is approved by the Library of Congress for use in contact with valuable documents. In addition to making pouches, this sealing method can also be used to produce continuous seals to edge-join rolls of materials at high speed.

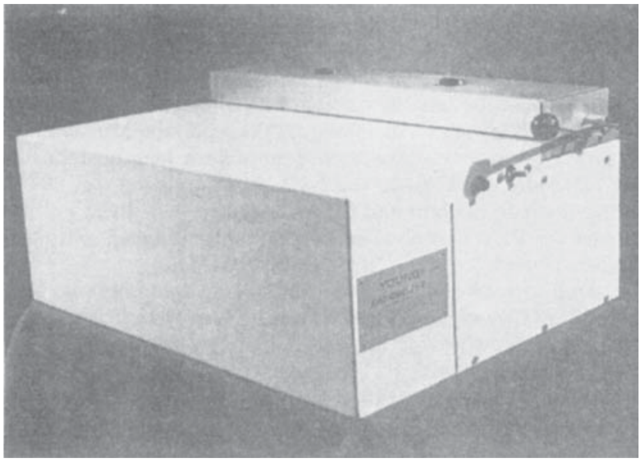

Figure 5. Radiant sealer.

HOT-MELT SEALING

Hot-melt sealing is performed by depositing either a continuous strip, or dots, of a thermoplastic material on a packaging member, just before the next member is pressed against it. It is used as an alternative to glue, since the packaging members quickly remove heat from the melt, making it tacky enough to hold the members together quickly to prevent the springback forces from opening them up (in sealing the covers of a shipping container). With glue, the members must be held together until enough of the glue's solvent is absorbed by the packaging material to make it tacky. Hot melts are also used where applied heat might damage a packaging member or where peelability is desired (see Adhesives; Waxes).

PNEUMATIC SEALING

Pneumatic sealing is used for skin packaging (see Carded packaging), where pressure from the atmosphere pushes a hot, tacky film into close conformity with an object and seals the film to a substrate on which the object is placed. It is also used in hermetic skin packaging for fresh red meat. The energy source for this type of sealing comes from the polymer being sealed, which has been preheated.

SOLVENT WELDING

Solvent welding is used to join together package configurations that may not lend themselves to heat sealing. It is also used for joining materials that are either not susceptible to heat sealing, or may be damaged by the application of heat (e.g., shrink sleeves). In this type of sealing, the solvent dissolves the polymer, which increases the mobility of the chains. In this case, chains can diffuse across the interface not because of heat, but because the polymer chains are more mobile in solution. When the solvents dry, the chains are left entangled. Solvent welding is commonly used for shrink sleeves. In the case of shrink sleeves, solvent is applied to one side of the material, which is folded over to create the weld. Its primary disadvantage is that the materials to be used must be reasonably soluble in commonly used solvents.

SELECTING A SEALING METHOD

For laminations and coextrusions with high-temperature outer layers, heated tooling sealing is the least expensive of all sealing methods. It should be considered first before other methods. If sticking to or contamination of the seal bar is a problem, the following should be tried out before abandoning heated tooling sealing:

1. Coating or impregnating the seal bar with Teflon® fluoropolymer (DuPont).
2. Periodically wiping the seal bar with a silicone grease.
3. Mounting a release material, such as Kapton® polyimide film (DuPont), between the seal bar and the packaging material.

If all of these fail, alternate sealing methods should be considered next. This article is not suited to be a complete reference for a seal method selection, but important items to be considered and possible sealing methods include:

Does the seal need to be cooled before the pressure is released? (Band/impulse sealing)
Does the seal need to separate the packages also? (Hot knife & hot wire sealing)
Is the package material very thick? (Ultrasonic, hot air/gas, contact)
Is the package material thick and aluminum foil-based? (Induction)
Does the sealer need to cut through significant contamination? (Ultrasonic)
Is this a cap seal application with aluminum? (Induction sealing)
Is the package material polar (dielectric)?
Is the package material an oriented film? (Second radiant sealing method)

When packaging materials are sealed, the package and its function dictate the properties to be achieved. Mechanical strength is important, since the seals should not fail under normal handling. Hermetic integrity is important in food, pharmaceutical, medical, and chemical packaging. Although small wrinkles in a seal area may have slight effect on its mechanical strength, they are completely unacceptable if a hermetic-type package is required. The best approach to avoid seal wrinkles is to hold the seal region of the construction under tension during sealing. If this is impractical, increasing the thickness of the sealant portion of a lamination may ensure good seals, even though small wrinkles may be present.

Incorporating EVA in polyethylene, or substituting ionomer (see Ionomers) as a sealant, results in improved flow properties and better tolerance of small wrinkles. The most reliable seals for hermetic packaging consist of true fusion welds between the opposed sealant members of a lamination. A true weld can be identified by pulling apart the lamination and noting where seal failure occurs. If it occurs along the interface between the materials, a true weld was not attained. If failure migrates from the interface, through the sealant, and to the outer portion of the lamination, a homogeneous seal has been achieved (see Multilayer flexible packaging).

If a peelable seal is desired, one should understand the risks of relying on control of temperature and/or pressure to achieve peelability. Seals made in this way may be peelable, but they can come apart by themselves with handling. Another way to achieve dependable peelability is to have an interface formulated to be peelable. There are three general strategies for achieving peelable seals. One is to "contaminate" the sealant so that it does not bond as strongly to itself during the seal process. This is known as an interfacial seal since it fails along the sealant-to-sealant interface. A second strategy is to control the adhesion between the sealant layer and the layer adjacent to it in a multilayer structure. As the seal is pulled apart, the opening forces burst through the sealant layer and the seal fails at the sealant-adjacent layer interface. This is known as a delamination or burst peel peelable seal. The initial seal strength is controlled by the thickness and tear strength of the sealant and the steady-state seal strength by the adhesion between layers. Delamination-type peel seals typically are less sensitive to seal bar temperature as a result. The third strategy is to design a sealant that has poor cohesive strength; failure occurs within the sealant layer as the seal is opened. This is known as a cohesive-type mechanism.

SEAL TESTING

The American Society of Testing and Materials (ASTM) has set up standards for the testing of the seal strength of flexible barrier materials. Their designation for the testing procedure is ASTM F88-06 and F2029-00. Hot tack testing is covered by ASTM F1921-98. There are also European standards such as those from the Deutsches Institute for Normung (DIN): DIN 55-529, 55-543, and 55-445. These German standards will likely be incorporated into European Union ISO standards at some time in the future.

These standards describe how the specimens are to be prepared, along with the equipment and methods to be employed for testing. Tests in accordance with these standards are extremely useful in comparing the seal strength achieved with various materials under consideration for a particular application. Seal strength and hot tack, however, are not the only criteria to be evaluated for many applications. Although some seals may test well in the laboratory, they may fail in service. Reasons for this failure include absence of a true fusion weld of the interfaces of the materials being sealed, among other reasons. Occasionally, unwelded seals perform well under mechanical testing, but fail in the actual applications. When there is not a true fusion weld, portions of the packaged product may find their way out of the package through the seal. For seals that must be reliable, particularly where sterility must be ensured in a package (see Healthcare packaging), sections of the seals should be examined under the microscope. Unless examination shows that the interface between the sealant portions of the laminations has been completely obliterated, the seals should be suspect; with a true fusion weld, there is no visible interface remaining.

The exception to this is peelable seals. The only way to ensure that these are acceptable for the long term is to subject them to rough-handling testing for extended times, exceeding the environmental extremes likely to be encountered. If heat processing is involved, good sense dictates that the tests be carried out for at least twice the period of time that the product is heat processed. Tests should also be conducted to simulate environmental pressure fluctuations at something in excess of the maximum temperature expected to be used in processing. For the packaging of chemicals, or other corrosive products, testing should be carried out with filled packages, subjected to rough handling, elevated temperatures, and any other severe conditions that might be experienced.

When dealing with flexible material constructions, even small wrinkles in the seal area produce a statistically significant percentage of leakers. Aside from visual inspection, no satisfactory automatic system has yet been devised to isolate packages with small seal wrinkles, although a great deal of time and money has been spent in this area. When developing a packaging system where seal integrity is paramount, everything should be done in the design of the system and its equipment to eliminate chances for seal wrinkles. The best way is to keep the packaging materials under tension in two directions while they are being sealed. This can do more to achieve success in eliminating seal wrinkles than any other single effort that might be made. Frequently, design of the packaging can be improved for the sole purpose of reducing the possibility of wrinkles in the seals.

Packaging testing can be also be conducted to evaluate the seal integrity of packages. Typically, this involves vacuum testing or pressurization testing. These tests can be conducted to the point of failure or set to test for pressure decay within the package. Vacuum tests can be conducted dry or under water. Pressure tests can be conducted by compression or inflation. In inflation pressure tests, the packages can be restrained or unrestrained. Additional options include dye leak tests and testing for leaking of gas out of or into the package.

Attempts have also been made to adopt online tests for seal integrity. These include optical comparators, deflection tests, infrared tests to evaluate the heat profile, and ultrasonic imaging techniques. All of these techniques have advantages and disadvantages. None are considered to give complete assurance of well-sealed packages.

BIBLIOGRAPHY

W. E. Young, "Sealing, Heat" in *The Wiley Encyclopedia of Packaging Technology*, 1st edition, by John Wiley & Sons, New York, 1986, pp. 574–578.

R. D. Farkas, *Heat Sealing*, Reinhold, New York, 1964.

D. Grewell, A. Benetar, and J. Park, eds., *Plastics and Composites Welding Handbook*, Hanser Publishers, Munich, Germany, 2003.

W. Nietzert, *Welding and Heat-Sealing of Thermoplastic Films*. Zechner and Huthig Verlag, Speyer am Rhein, Germany, 1965.

W. Whiteside, *PKGSC 401 Packaging Machinery Class Notes*, Clemson University, Clemson, SC, 2007.

D. Darby, *Sealing Technology for Packaging Processes Seminar Notes*, Clemson University, Clemson, SC, 2007.

D. Considine, *Ultrasonic Packaging Sealing-Technology and Applications Review*, Herrmann Ultrasonics, Bartlett, IL, March 22, 2007.

General References

W. E. Young, "Sealing" in W. C. Simms, ed., *Packaging Encyclopedia*, Cahners Publishing, Boston, 1984.

K. R. Osborn and W. Jenkins, *Plastic Films: Technology and Packaging Applications*, CRC Press, Boca raton, FL, 1992.

SHEET, PETG

JOHN WININGER
Eastman Chemical Co.
Kingsport, Tennessee

PETG copolyester is a clear amorphous polymer with a glass-transition temperature (T_g) of approximately 81°C (178°F) as determined by differential scanning calorimetry (DSC). It is manufactured by an addition of a second glycol to polyethylene terephthalate (PET) to eliminate crystallization; therefore, all PETG-finished products are amorphous. PETG has a number-average molecular weight (M_n) of approximately 26,000. As with all thermoplastic polyesters, PETG is subject to hydrolysis (during processing) in the melt state. Although some reduction in molecular weight is a normal consequence of melt extrusion, insufficient drying of PETG can result in an excessive inherent (or intrinsic) viscosity (IV) breakdown that is reflected in lower physical properties—particularly impact strength.

A harmful degree of hydrolytic degradation can be prevented if PETG is dried in a dehumidifying dryer at 65°C (149°F) for 4 h to reduce the moisture level to less than 0.08% before processing.

The molecular weight of either PETG pellets or extruded sheet can be correlated to IV, which is normally determined with a capillary viscometer; however, because this procedure is complex and the required solvents are hazardous, a simpler melt-flow-rate test is preferable. The resulting flow-rate number can later be converted (via the calibration curves) to the more standard polyester IV units.

Thermal and electrical properties of PETG copolyester are shown in Tables 1 and 2.

Unstressed sheet extruded from PETG copolyester exhibits good resistance to dilute aqueous solutions of mineral acids, bases, salts, soaps, aliphatic hydrocarbons, alcohols, and a variety of oils.

Halogenated hydrocarbons, low-molecular-weight ketones, and aromatic hydrocarbons will swell or dissolve the plastic.

A plastic sheet extruded from PETG copolyester has good transparency, low haze, and high surface gloss. It has high stiffness and good impact strength. The physical properties for a 3-mm (0.12-in.) PETG sheet are shown in Table 1.

PETG COPOLYESTER SHEET EXTRUSION

PETG copolyester can be extruded into a clear, tough, amorphous sheet at melt temperatures that usually range within 230–250°C (446–482°F). The sheet thickness is limited only by the cooling capacity of the processing rollstock and/or the capability of the downstream takeoff equipment, but otherwise it might typically range from 1 mm (0.04 in.) to 13 mm (0.50 in.) or thicker.

The extrusion of PETG copolyester is straightforward, and good results can be expected when suitable equipment and proper procedures are used, which include pellet drying, melt extrusion into sheet, and nip polishing on a chrome-plated three-roll stack to ensure an excellent surface finish and good transverse-direction gauge control. Machine-direction gauge control is dependent on the uniformity of extruder output. Excellent uniformity can be obtained using a gear pump with PETG, but its use is especially suggested when regrind is included in the PETG feedstock.

At a given speed, a gear pump provides a constant volumetric rate of copolymer melt to the sheet die. The pressure between the extruder discharge and the entrance to the gear pump is controlled by varying the extruder screw rpm. The variation in extruder output caused by changes in the percentage of regrind or particle shape and size are isolated from the extrusion, die, and the effect on the plastic sheet gauge is minimized. For example, a gear pump set at a suction pressure of 6.9 MPa (1000 psi) would typically control PETG sheet gauge to approximately $\pm 4\%$.

A barrier screw that is cored for water cooling in the feed zone is typically used to extrude the PETG sheet. Industry practice for all polyesters, including PETG copolyester, usually requires an extruder screw with a minimum length/diameter (L/D) ratio of 24:1. As the L/D ratio increases (e.g., 30:1), output capacity (lb/h) and output stability (–/+ lb/h) will improve for PETG copolyester, if a suitably designed extrusion screw is used.

Melt filtration is normally used to trap contaminants and/or other types of particulate matter such as “fines,” which can be associated with regrind use. A simple screen pack assembly is often used with PETG copolyester, but several different types of automated filtration systems are commercially available for polyesters.

SECONDARY FABRICATION OF PETG SHEET

The manufacture of plastic articles from PETG copolyester sheet normally involves secondary operations such as sawing, drilling, bending, decorating, and assembling. PETG sheet can be worked with most tools that are suitable for use with wood or metal; however, the tool speed normally must be reduced to prevent friction melting.

PETG copolyester sheet thickness of ≤ 2.5 mm (0.10 in.) can be cut effectively with either a power shear (straight cut) or with a steel rule die (irregular cut). The blade-to-bed clearance and alignment for the shear knife edge is an important consideration when cutting PETG sheet. Additionally, a steel rule die press must have a very accurate stroke to prevent damage to the cutting die. Saw cutting is a preferred technique for sheet thicknesses of >2.5 mm (0.10 in.).

FORMING

Hot Bending. PETG copolyester sheet can be bent around a small radius by preheating an area on both sides with an electric strip heater and then quickly bending the sheet along the heated line. Sheet thicknesses of >3.2 mm (0.13 in.) should be turned periodically during the heating cycle.

Cold Bending. Unheated PETG sheet of ≤ 2.5 mm (0.10 in.) thick can be successfully brake formed at bending rates somewhat slower than heated sheet.

Thermoforming. Several different thermoforming techniques can be used to force a PETG sheet, once heated, into the shape of a mold by mechanical force, vacuum force, or by air pressure. Both male (plug) and female (cavity) molds can be used. Low-cost plaster molds, cast aluminum molds, and/or water-cooled steel molds are commonly used. Typical forming processes include vacuum, drape, and matched mold. Thermoformed items include light fixtures, tote trays, housewares, toys, and a variety of different transparent enclosures.

PETG Sheet Assembly. Several solvents, cements, and adhesives can be used effectively with PETG copolyester sheet products. Sheet edges, once aligned, are softened by applying cement and clamping until dry.

A PETG copolyester sheet is often fabricated with mechanical fasteners. This technique is preferred if frequent disassembly of a product is required. Common mechanical fasteners include screws, rivets, bolts, clips, hinges, and dowels. This may be a concern, however, if security is a consideration.

PETG Sheet Finishing. PETG copolyester sheet is best sanded wet to avoid frictional heat buildup. An 80-grit silicon carbide could be initially used, followed by progressively finer abrasives (e.g., 280, 400, and 600).

PETG Sheet Decoration. PETG copolyester sheet can be hotdie-stamped through a film carrier that contains either

Table 1. Typical Properties of 3-mm PETG Copolyester Sheet[a]

Property[b]	Conditions	ASTM Method	Units SI	Units U.S. Customary	Typical Value SI	Typical Value U.S. Customary
General						
Density	23°C (73°F)	D1505	kg/m^3	g/cm^3	1270	1.27
Water absorption	23°C (73°F), 24-h immersion	D570	%	%	0.2	0.2
Mechanical						
Tensile stress at yield	50 mm/min (2 in./min)	D638	MPa	psi	53	7700
Tensile stress at break	50 mm/min (2 in./min)	D638	MPa	psi	26	3800
Elongation at yield	50 mm/min (2 in./min)	D638	%	%	4.8	4.8
Elongation at break	50 mm/min (2 in./min)	D638	%	%	50	50
Tensile modulus	5.0 mm/min (0.2 in./min)	D638	MPa	10^5 psi	2200	3.2
Flexural modulus	1.27 mm/min (0.05 in./min)	D790	MPa	10^5 psi	2100	3.1
Flexural strength	1.27 mm/min (0.05 in./min)	D790	MPa	psi	77	11,200
Rockwell hardness	—	D785	R scale	R scale	115	115
Izod impact strength, notched	23°C (73°F)	D256	J/m	ft . lbf/in.	88	1.7
	0°C (32°F)	D256	J/m	ft . lbf/in.	66	1.2
	−30°C (−22°F)	D256	J/m	ft . lbf/in.	39	0.7
Impact strength, unnotched	23°C (73°F)	D4812	J/m	ft . lbf/in.	NB[c]	NB[c]
	0°C (32°F)	D4812	J/m	ft . lbf/in.	NB[c]	NB[c]
	−30°C (−22°F)	D4812	J/m	ft . lbf/in.	NB[c]	NB[c]
Impact resistance—puncture, energy at maximum load	23°C (73°F)	D3763	J	ft . lbf	33	24
	0°C (32°F)	D3763	atJ	ft . lbf	40	30
	−10°C (14°F)	D3763	J	ft . lbf	42	31
	−20°C (−4°F)	D3763	J	ft . lbf	43	32
	−30°C (−22°F)	D3763	J	ft . lbf	47	34
Thermal						
Deflection temperature	0.455 MPa (66 psi)	D648	°C	°F	74	164
	1.82 MPa (264 psi)	D648	°C	°F	70	157
Vicat softening temperature	1 kg	D1525	°C	°F	83	181
Underwriters Laboratory (UL) flammability classification	—	UL94		—	[d]	[d]
			—			
Flammability (France)	—	NFP 92501	—	—	[e]	[e]
Flammability (Germany)	—	DIN4102, Part 1	—	—	B2	B2
Flammability (Great Britian)	—	BS476, Part 7	—	—	2	2
Oxygen index[f]	—	D2863	%	%	26	26
Coefficient of linear thermal expansion	—	D696		10^{-5}/°F	6.8	3.8

Optical			$10^{-5}/^{\circ}C$			
Haze	—	D1003	%	%	<1	<1
Light transmission	Specular	D1003	%	%	86	86
	Diffuse	D1003	%	%	88	84
Gloss	60° angle	D523	Units	Units	159	159
Color[b]*	CIELAB, Illuminant D6500, 10° observer	E308		Units	<1	<1
			Units			
Yellowness index	CIELAB, Illuminant D6500, 10° observer	D1925		Units	<1.5	<1.5
			Units			
Refractive index, N_d	—	D542	—	—	1.57	1.57
Electrical						
Dielectric constant	1 kHz	D150	—	—	2.6	2.6
	1 MHz	D150	—	—	2.4	2.4
Dissipation factor	1 kHz	D150	—	—	0.005	0.005
	1 MHz	D150	—	—	0.02	0.02
Arc resistance	—	D495	s	s	158	158
Volume resistivity	—	D257	ohm . cm	ohm . cm	10^{15}	10^{15}
Surface resistivity	—	D257	ohms/square	ohms/square	10^{16}	10^{16}
Dielectric strength short time	500 V/s rate of rise	D149	kV/mm	V/mil	16.1	410

---

[a] Properties reported here are typical of average lots. Eastman makes no representation that the material in any particular shipment will conform exactly to the values given.

[b] Unless noted otherwise, all tests are run at 23°C (73°F) and 50% rh, using specimens machined from extruded sheeting with a thickness as indicated.

[c] Nonbreak as defined in ASTM D4812 using specimens with thickness as indicated.

[d] Not tested by UL but would expect to be the same as Spectar copolyester 14471 [94V-2 for thicknesses of 3.13–12.7 mm (0.123–0.5 in.) and 94HB for thicknesses of <3.13 mm (0.123 in.)].

[e] Tests performed on 5-mm sheeting gave a rating of M2.

[f] Dripping and warpage of samples during testing can cause erratic test results.

Table 2. Thermal Properties of 3-mm PETG Copolyester Sheet[a]

		Test Method	
Property,[b] Units	Typical Value	ASTM	ISO
Deflection temperature at 1.83-MPa (264-psi) fiber stress			
°C	64		
°F	147	D648	75
at 0.46-MPa (66-psi) fiber stress			
°C	70		
°F	158		
Vicat softening point			
°C	85	D1525	306
°F	185		
Thermal conductivity			
$W/m \cdot K$	0.19	C177	—
$(Btu \cdot in.)/(h \cdot ft^2 \cdot {}^\circ F)$	1.3		
Glass-transition temperature			
°C	81	[c]	[c]
°F	178		
Specific heat, $kJ/(kg \cdot K)$ $[Btu/(b \cdot {}^\circ F)]$			
at 60°C (140°F)	1.30 (0.31)		
at 100°C (212°F)	1.76 (0.42)		
at 150°C (302°F)	1.88 (0.45)	[c]	[c]
at 200°C (392°F)	1.97 (0.47)		
at 250°C (482°F)	2.05 (0.49)		
Coefficient of linear thermal	5.1×10^{25}	D696	—
expansion, mm/(mm. °C) [in./(in. · ° F)]	(2.8×10^{25})		
Flammability [3.2-mm (1/8-in.)-thick specimen] cm/min	<2.5		
in./min	<1	D635	—
UL flammability classification			
3.2 mm (0.125 in.)	94V-2		
1.6 mm (0.0625 in.)	94HB	UL94	—
Oxygen index %	24	D2863	—
Melt density			
at 200°C, g/cm^3	1.19	—	—
at 250°C, g/cm^3	0.98		

[a] Properties reported here are typical of average lots. Eastman makes no representation that the material in any particular shipment will conform exactly to the values given.
[b] Unless noted otherwise, all tests were run at 23°C (73°F) and 50% rh.
[c] Glass-transition temperature and specific heat were determined by DSC.
[d] UL flammability classifications are formula-specific. Spectar copolyester 14471 has the ratings shown.

metal or paint. Letters, designs, and trademarks are examples of hot-stamped processes. PETG sheet can also be printed on conventional processes such as letterpress, offset lithography, rotogravure, silk screen, and stenciling. Application of a protective lacquer is often applied over the hot-stamped and printed areas (see the Decorating articles).

PETG copolyester can be extruded in a variety of thicknesses, coextruded with or without tie layers, and formed or fabricated, to meet the needs of ever-increasing consumer and industrial markets. The price, performance, and availability of PETG copolyester make it a very important material in the plastics market today.

BIBLIOGRAPHY

General References

References include MBS-80J, Eastar *PETG Copolyester 6763*.

DSS-429A, *Physical Properties of Spectar Copolyester 14471 Plastic Sheet*.

TRS-94F, *Secondary Fabrication Techniques for Sheet Extruded from Spectar Copolyester.*

TRS-131, *Extrusion of Plastic Sheet from Spectar Copolymer.*

SHELF LIFE

Kenneth S. Marsh
Kenneth S. Marsh and
Associates, Ltd., Woodstock
Institute for Science in Service
to Humanity, Seneca, South
Carolina

DEFINITION OF SHELF LIFE

Shelf life is the time after production and packaging that a product remains acceptable under defined environmental conditions. It is a function of the product, the package, and the environment through which the product is transported, stored, and sold. Each of these influencing factors will be discussed below.

The shelf life for any given product can vary greatly, depending upon the formulation, the packaging system, and the distribution environment. In general, use of preservatives, increased barrier packaging, and colder distribution environments will extend shelf lives. These options typically also increase costs. The ideal shelf life from the company perspective is one that matches the distribution and use of the product to the company's inventory. The ideal shelf life from a consumer point of view allows them to fully use the product. Specification for overly lengthy shelf lives usually increases cost in terms of materials, whereas overly short shelf lives usually increases cost in terms of wasted or discarded product or in terms of increased liability. It is therefore prudent to define a reasonable shelf life and to assure that the shelf life specification is met.

The principles of shelf-life testing hold for virtually any product/package combination. Products that are packaged in impermeable materials, such as glass or metal, degrade primarily through mechanisms that are inherent in the chemistry of the product. Since these mechanisms are essentially product-dependent and vary with the product, evaluations of the package would be unproductive. Notable exceptions to this are situations in which the package allows or contributes to deterioration of the product. For example, glass allows light transmission that can promote oxidation reactions, but can be tinted to filter wavelengths that promote these reactions. Metal cans can react with products with either (a) the metal substrate itself (e.g., pinholes in tinplate) or (b) components of the can coating. Improvements in can and coating technology are designed to preclude these interactions. (For further discussion refer to sections of this Encyclopedia on the appropriate container.) Since the reactions of these impermeable containers are specific to the containers, further discussion of packaging influences will be directed toward semipermeable and permeable materials.

FACTORS THAT INFLUENCE SHELF LIFE

Product

Products differ greatly in their susceptibility to degradation by various agents. Some products will become unacceptable from a change in moisture content. For example, a moisture gain in ready-to-eat breakfast cereals will destroy the crisp texture; a moisture loss in an intravenous product will increase the declared dosage per unit volume. Snack items often are sensitive to oxidation of the oils absorbed during frying and can become rancid. Snacks also can be sensitive to moisture change. The mode of failure of the product will have a direct influence on the type of protection which is sought from the packaging material. The match between product susceptibilities and package protection will have an impact on the shelf life.

Once the mode of deterioration of the product is determined, acceptance criteria need to be defined. Acceptance criteria is the range of the critical component for which the product is considered acceptable. This is often done by a sensory panel. Ideally, sensory scores can be correlated to analytical data such that result of that analysis can provide the index for product quality.

The acceptability criteria for any product has a direct influence on the measurement of shelf life. Some products have a clear point of acceptability. Others have complex deteriorations that make it difficult to identify a critical point. This can be further complicated by products that have multiple or interacting modes of failure. In these cases, subjective decisions must be made to set the acceptance criteria. It deserves mention that the ultimate acceptability is that of the consumer. Concordance between a standardized definition of acceptability (as used within the company) and actual consumer acceptance is crucial to the commercial success of the product. The determination of this concordance is more properly within the domain of marketing research, but the degree of correlation determines the validity of the research effort.

The product that is tested for shelf life must be specified. This may sound trivial, but reformulations and ingredient cost reductions can alter product characteristics without changing the product name. The result is that assumptions may be made on the basis of past performance which may not hold for the present product. Therefore, the test label should include product name, formulation (or reference to specific formulation in a lab notebook), date of manufacture, date of test, conditions of test, and principal researcher. The packaging system must also be identified in terms of key factors as described below.

Package

The package offers protection for the product against an agent that degrades the product. For moisture-sensitive products, this protection is in terms of the water vapor transmission rate (WVTR); for oxygen-sensitive products it is in terms of the oxygen transmission rate (OTR); and so on. The mode of protection can change for the same product with different packaging. For example, a snack product that is sensitive to moisture gain (loses crispness) and oxygen (becomes rancid) could be called "moisture-sensitive" if the texture degrades before the rancidity becomes objectionable. This same product, if packaged in a sufficient moisture barrier, would be identified as "oxygen-sensitive" in terms of package criteria.

Permeation rates for chosen packaging materials need to be determined for the agent in question. WVTR and OTR are measurable by a variety of standard procedures (see Testing, permeation and leakage). Permeation rates for flavors and other vapors can be determined by organic permeation instruments (see Aroma barrier testing) as well as by gas chromatographic, mass spectral, infrared, and other techniques.

The size of the package also influences the shelf life. As the package size increases, the surface-to-volume ratio decreases. The result is that the amount of permeant that comes through the package increases as a square function, but the volume of product that absorbs this permeant increases as a cube function. In other words, the permeant is diluted with more product in a larger package. The barrier requirements, therefore, decrease with the package size, all other factors remaining equal.

In summary, therefore, the packaging parameters that must be specified for shelf life testing are the material designation and source, the appropriate transmission rate, the surface area, and the net weight of the enclosed product.

Environment

Product distribution causes stress on the product as a function of product sensitivities and all conditions experienced by the product as it is carried through various distribution networks. Actual conditions vary with where it is shipped, how it is shipped, the seasons, warehouse conditions, and so on. It is impossible to account for this variety of conditions by using a single storage condition. Therefore, the manufacturer of sensitive products (food, pharmaceuticals, cosmetics, tobacco, chemicals) must define the criteria that will be used for the shelf-life determinations. Pharmaceutical manufacturers must package for the worst-case situation, so packaging will be designed to survive under the most severe conditions in the distribution chain. Food products are often packaged for less-than-worst-case scenarios. Products that are not rotated on the supermarket shelf (such as if a product is replenished in front of existing stock) may fail, but this loss is considered economically preferrable to increasing packaging costs for the entire line to accommodate this situation. Conditions that allow 80% of the product to survive distribution is not uncommon. Improved distribution and product rotation can reduce the quantity of outlying product. Once the representative distribution mode is chosen, useful statistical indices can be derived which represent this mode.

The shelf life impacts greatly on the distribution system and *vice versa*. Products with short shelf lives require a more rapid distribution system. For example, Frito Lay supplies the nation's grocery stores with snack items via over 200 major distribution sites that in turn are supplied from 32 production facilities (1). This allows potato chips and other snacks, which are susceptible to both moisture and oxidative degradation, to reach the consumer in a fresh and crisp form. In contrast, Proctor and Gamble Company distributes Pringles from one production facility (Jackson, TN). A casual examination of Pringles versus Frito's potato chip packaging will describe for the reader the consequences of the product/distribution strategies. Pringles uses a multilayered composite can structure with foil barrier as compared to the simpler flexible pouch in the Frito system. But when potato chips were brought to the top of Mt. Everest, only Pringles made it intact (2).

Refrigerated or frozen distribution is costly, but provides additional protection for the products. Additional processing/packaging such as hot fill, aseptic, or retort packaging extend the shelf life and eliminate the need for refrigeration. In Europe and Asia, where typical home refrigerator and freezer space is more limited than in typical U.S. households, retort and aseptic packaging are far more important. The Brik-Pack, for example, was developed in Europe to fill the gap that the United States fills with refrigeration.

The distribution environment also impacts shelf life from a physical perspective. Lack of quality roads, suspension systems on trucks, sway potential on railcars, and so on, can influence product distribution substantiallty. Potholes, for example, can lead to crushing, bruising, and impact damage. Packaging choice can partially compensate against this damage, typically at a greater cost. But poor infrastructure will influence either packaging choice, product quality, or both. Two examples: Crates can limit weight experienced by a truckload of fresh produce on bumpy roads, and they were found to reduce crushing damage from over 20% to 5% in Sri Lanka; steel two-piece cans are used for bevereages in Africa in locales in which aluminum two-piece cans had inadequate strength to survive transport. Another factor for determining acceptability or unacceptability of products, especially food products, is attack by insects, birds, rodents, and other animals. Packaging, storage, and distribution environments all play a role in limiting this damage. Such "shelf-life" limitations from physical forces are typically addressed in distribution discussions and components such as cushioning, and biological attacks are typically addressed by materials choice and warehouse and distribution conditions. Many people in the developed world underestimate these losses (3), which become increasingly important in less developed countries in which food insecurity is a major problem. Packaging serves to protect products, but also allows products to be more competitive (4). Most of the following discussion concentrates on chemical and microbiological influences.

The measurement of shelf life is becoming increasingly more important. The competitive nature of contemporary business and increased energy costs have resulted in renewed interest in reducing packaging costs. An abundance of new packaging materials facilitates the choices, but also adds to the complexity of the choice. In addition to the above, governmental requirements for open dating, required for pharmaceuticals and some foods (5), necessitate shelf-life testing. Open dating is the addition of a date on the package which indicates by what date the product should be consumed. This can take different forms as shown below.

A brief synopsis of different types of open dating is in order. Dating of products online has been the practice of companies producing food, pharmaceutical, and other sensitive products. Each company developed its own proprietary coding system to enable identification of production dates and production facility when necessary. These codes, which were designed to be unreadable to consumers and competing producers, identify production dates when necessary. Open dating changes this.

Various types of dating are possible. A direct conversion of production codes into consumer readable form gives the date of manufacture. A freshness date (“use by”) indicates the date by which the product should be consumed to assure maximum freshness. A pull date is the date after which the product should no longer be sold. Milk and dairy products use pull dates.

It must be noted that all of the above dates assume storage under specific conditions. For example, dairy products are assumed to be refrigerated. If conditions are not held as anticipated, product quality will not be reflected as implied in the dates.

Dating of products will benefit the consumer, but also has the potential of benefiting both manufacturer and retailer. It would improve stock rotation (as mentioned above), which could ultimately reduce the packaging requirements necessitated by existence of old product.

TRADITIONAL APPROACHES TO SHELF-LIFE TESTING

Shipping Tests

One common procedure for testing shelf life is a shipping test. Shipping tests are often used as an adjunct to other shelf-life testing, but sometimes are considered a replacement. This is a mistake, because shipping is only a component of the testing environment. This type of testing is characterized by uncontrolled and often unknowable storage conditions, although recording sensors now exist to measure conditions. A product is shipped to a warehouse, stored for a specified time, and then returned to headquarters (or R&D) and examined for acceptability. Shipping tests are also used to check for product deterioration from shock and vibration during shipment. At least one company uses shipment through the Chicago post office as the ultimate test for product endurance. Shock and vibration effects are important for assessing product quality. They are abuse-dependent rather than time-dependent, however, and are discussed separately (see Testing, product fragility).

Shipping tests show product quality changes with time under real-world situations. The specific experience of a specific test may be representative of part of the distribution chain but rarely, if ever, represents all conditions that the product will experience. The test carries the illusion of being a representative real-world test. However, the changing conditions, as well as factors such as the difference in product experience between shipment in carton versus pallet quantities, will necessitate careful evaluation of the results.

Storage Tests

Storage tests consist of (a) maintaining product in a static facility and (b) evaluating product quality with time. Storage conditions can be uncontrolled or controlled. Warehouse storage is often characterized by uncontrolled conditions. Storage conditions can be controlled through the use of storage cabinets that maintain temperature (and often humidity) at specified values. This results in a test that can offer more reproducible data. Various conditions can be tested, including accelerated conditions that allow for more rapid results. A typical ambient condition (for the United States as defined by TAPPI) is 73°F(23°C)/50% relative humidity (R.H.).

Accelerated conditions vary, but a typical condition may be 39°C (95°F)/80% R.H. Accelerated storage speeds product degradation (6). However, the factor that defines this increase is related to the kinetics of the chemical reactions which define the degradation. This varies with product and with mode of degradation. Therefore, any standard multiplication factor is meaningless.

Accelerated studies are useful if an initial evaluation is performed at both ambient and accelerated conditions and then compared. This comparison can be through actual kinetic studies (such as Q_{10} analysis described below) or by shelf-life comparison. It is imperative to ensure that discontinuities do not exist between ambient conditions and accelerated conditions. If either the product or packaging passes through a transition, the results of the accelerated test will have little bearing on comparisons with ambient. Transitions that affect packaging include the glass-transition temperature (T_g). For example, permeation values for polypropylene cannot be extrapolated to frozen conditions due to a T_g at -10°C (14°F). Those for products include melting/freezing of any ingredient (usually water or fats), recrystallizations, and so on. In addition, activation energies must be considered, because certain reactions will not occur below certain temperatures. Extrapolation below these temperatures is therefore not recommended.

Q_{10} analysis involves testing products at varying temperatures, as well as defining the difference in reaction rate for a 10°C (18°F) temperature increase. A Q_{10} of 2 means that the reaction rate will double for each 10°C increase in temperature. This is based on the Arrhenius relationship, which is discussed in any text on kinetics or physical chemistry. The Arrhenius relationship is perhaps an oversimplification for the complex chemistries of most products. A straight-line relationship with a minimum of three points (over a limited temperature range) indicates that Q_{10} can provide a useful indicator for storage duration. Caution relating to transitions remains, and it also deserves mention that the Q_{10} itself is temperature-dependent. However, products are usually studied under a limited range of temperatures through which a constant Q_{10} can be assumed.

Once the Q_{10} is determined (and shown valid through a linear Arrhenius relationship), the value can be used to predict the time necessary to test a product to be equivalent to the shelf life at ambient temperature. For example, a product with a Q_{10} equal to 2.4 can be stored for 10 weeks at 33°C (91°F) to obtain results similar to 24 weeks storage at 23°C (73°F). (One can view these studies as a test in which the conditions extended to the package are exaggerated in an attempt to simulate the accelerated passage of time. The underlying assumption is not always valid, and the technique is only as good as that underlying assumption.)

An alternative type of “accelerated” test is a study in which the permeation rate of the packaging material is “accelerated.” A product that is being tested for sensitivity to moisture is packaged in a low-moisture/high-oxygen barrier material (such as polyacrylonitrile or polyacrylonitrile copolymers). With a known permeability, area, and net weight, the amount of moisture permeating the package can be determined. Product can be sampled for acceptability until failure is reached. This defines the amount of moisture transfer that can be tolerated. Calculations with higher moisture barrier materials can provide performance criteria for the additional materials. A similar study can be performed for oxygen-sensitive products by using a low-oxygen/high-moisture barrier material (such as polyolefins). In essence, this test purposefully introduces a known amount of the critical agent to accelerate the time to degradation without changing the conditions experienced by the product. A cautionary note is important. The accelerated test described above includes the inherent assumption that the changes in the product occur faster than the transmission across the package. If an accelerated test allows sufficient permeation such that product changes are slower than the influx of permeant (i.e., is diffusion dependant), the results will indicate a shelf life that is longer than the extrapolation to a reasonable barrier material. This is due to a critical permeant level being obtained faster than the evidence of product degradation.

COMPUTER MODELS FOR SHELF LIFE

The shipping and storage tests require that the choice of packaging be made before the study. Chosen materials are then submitted for evaluation with time as the test proceeds. Successful completion of the test verifies that the chosen package will last at least as long as the chosen test duration under the conditions of the test. Failure to survive the test conditions demonstrates insufficient protection. The deficiencies of this procedure are that failure is not known until demonstrated, and overprotection is not shown at all because testing usually terminates after desired time is reached.

The use of a computer to simulate a storage test provides a means to pretest materials before actual storage testing. By performing these calculations rapidly, as only a computer can do, many iterations are possible within a reasonable time, providing a powerful support tool for packaging development. The simulations are accomplished by separating the product and packaging characteristics. The product is analyzed for changes that occur on exposure to the shelf-life-limiting parameter, which is identified as the mode of failure for the product. The packaging material is analyzed for its barrier properties against that parameter. The computer is then used to combine the protective aspects of the package with the sensitive properties of the product. Since packaging, product, and storage parameters are entered independently, it is possible to test the effect of different packages or conditions simply by entering the new variables.

Computer simulation yields the most cost-effective packaging design. Later real-time storage studies serve the purposes of legal requirements and confirmation of predicted results. Differences between predicted and actual results can be used as indices to check initial assumptions. For example, poor seals will shorten actual shelf life achieved with an otherwise-adequate barrier material. In this example, the false assumption is that the material barrier value is equivalent to the package permeation (see Testing, permeation and leakage).

Simulated studies extend beyond the one-package/one-condition study. Parameters can be changed to affect another study. A survey of potential new packaging materials can be accomplished without need to retest the product. Only the changes in material parameters need be entered to test performance. This is especially important when limited amounts of product material are available, as in the product-development stage. Changing storage conditions follow a similar procedure, but the caution for passing transitions remains. Computer modeling has been used successfully for foods (7–9), over-the-counter products (10), and pharmaceuticals (11).

Product Evaluation

The mode of failure for the product must be known prior to using any simulated approach. This could be moisture gain or loss, oxidation, CO_2 loss, flavor loss, chemical degradation, and so on. Once the critical factor is known, testing is conducted to show product changes with change in the critical factor. For example, a moisture-sensitive product is evaluated for change in moisture content as the relative humidity in the storage environment is varied. This test is the moisture isotherm. The isotherm can be completed in usually one to four weeks, depending on the rapidity at which the samples equilibrate. For oxygen-sensitive products, the testing consists of evaluating product changes with oxygen uptake and can be performed by inverse gas chromatography, respirometry, Warburg, Totox, or a variety of tests for degree of oxidation. For carbonated beverages packaged in permeable bottles, the test would be to measure carbonation loss (soda), or oxidation (beer) or both.

The product testing should be performed at various temperatures if temperature effects are to be modeled. The evaluation of differences in reaction rates versus temperature supplies important information concerning the kinetics of the reaction and can be used to investigate performance for different distribution environments. A minimum of three test temperatures are recommended. The caution concerning transitions remains valid.

Package Evaluation

For computer modeling purposes, the chief packaging characteristics are barrier properties. Materials that do not change significantly with machining and flexing can be tested in flat sheet form for water vapor transmission rate (WVTR), oxygen transmission rate (OTR), or any other permeant that is critical for the product. For materials that change with handling (waxed glassine, foil, etc.,) full package testing is recommended. The computer model measures the change of permeant level in the package as a function of the transmission rate. If the flat sheet value is used in a system that is poorly sealed, or has developed fractures in handling, the predicted shelf life will be erroneously long.

The package material characteristics of sealability, printability, compatability, cost, mechanical strength, etc remain the province of the packaging engineer and are not usually incorporated into computer models. Nonbarrier parameters are not included in this discussion of shelf life. Those parameters that do affect shelf life, but are not in the model (e.g., light transmission for oxygen-sensitive products), must be considered in evaluating any computer printouts.

Model Fundamentals

The internal environment of a package changes as permeants enter or leave the package. In terms of the mathematics, components which enter the package from the outside environment, and those which permeate from the inside to the outside, are identical. Transmission will always occur from the high concentration to the lower concentration side of the material. Therefore, any discussion or examples of permeation rates are valid for either circumstance.

The transmission rate is standardized for package area, film thickness, time of measurement, and difference of partial pressure of permeant across the package. In general, the terms are amount of permeant multiplied by film thickness per package area per time per unit of partial pressure differential. The measurement is also made at a temperature that is implied but not usually stated in the units. In use, the standardized transmission rate is combined with area, thickness, and time in the model to define how much permeant can enter or leave the package. The effect on the product is a function of the net weight of the product upon which the permeant acts. The partial pressure differential across the package becomes difficult to measure, and it changes as the internal environment of the package changes.

The partial-pressure-differential change with permeation is the major reason for the use of computers in shelf-life modeling. If this change did not occur, one could simply multiply transmission rate by time and area and divide by the thickness to obtain amount of permeation for any time. This assumed straight-line relationship overestimates transmission because the permeation process itself reduces the differential of partial pressure across the film and therefore reduces the transmission. In addition to the driving-force change due to the transmission of permeant, some of the permeant is absorbed by the product and further complicates the system. In engineering terms, as the permeation process proceeds, the driving force of this process (the partial pressure differential) decreases. This change can be described by a differential equation. The computer models incorporate these effects and yield a representative manifestation of the process.

Computer models are usually based on a relatively simple mass transfer equation. Many models have been developed that have not been reported in a usable form in the literature. These include models on oxidation-sensitive products, beverages, and products in which product characteristics result in product-dependent models.

The general models are based on a standard differential equation that describes mass transfer across a permeable barrier. This is shown in the following equation (12):

$$\frac{dW}{dt} = \frac{k}{l} \times A(P_{\text{out}} - P_{\text{in}})$$

where

t = time
W = change in weight of the critical component
k = permeability coefficient for the packaging material
l = thickness of the packaging material
A = area of the package
P_{out} = partial pressure of permeant outside the package
P_{in} = partial pressure of permeant inside the package

This equation can be converted into a usable form by substituting measurable values for the W and P_{in} terms. The P_{out} term is readily obtainable: For oxygen, it is 0.21 atm (21.3 kPa); For moisture, it is the saturated vapor pressure (13) times the RH of storage; for flavors and volatile components, it is essentially zero.

The P_{in} term requires knowledge of the reaction of the permeant with the product. In the case of moisture change, this is expressed as the moisture isotherm that describes change in product moisture versus storage relative humidity. An expression that describes the water activity over the product for any moisture value can be used to define the P_{in} term. (Water activity, *Aw*, is the partial pressure of water above the product divided by the saturated vapor pressure of water at the same temperature.) First, the isotherm is determined. Second, an expression is derived which describes *Aw* as a function of moisture content. Finally, P_{in} at any moisture content can be described as the expression for *Aw* times the saturated vapor pressure. (*Note*: Water activity is traditionally used. However, this is only valid at the temperature used in the isotherm study. The preferred procedure would study moisture content as a function of vapor pressure directly, instead of as a function of *Aw*. The model converts *Aw* into pressure terms.) Models for permeants other than moisture require analogous expressions to relate internal pressure to product changes.

With a substituted expression for the P_{in} term in concentration terms rather than weight terms, the W term needs to be expressed in concentration terms. An expression is therefore needed which describes the change in concentration as a function of weight change.

The above expressions are then substituted into the equation, they are rearranged to combine variables onto one side of the equation, and the new equation is integrated to form the model. The limits of integration are (a) permeant concentration from initial to critical values and (b) time from initial to shelf life (time to reach critical amount of permeant).

The various models described in the literature use approaches related to the above procedure. Simplifying assumptions (such as linearity in the isotherm) are used to develop simpler models. These models can be used to advantage as long as the assumptions are kept in mind. The fewer the restrictions used in deriving the expressions, the more universal the model. However, the mathematics become increasingly complex.

The models do not replace the need for actual storage studies. Storage is still necessary to verify product changes, find unusual effects, and, in some cases, meet compliance criteria with government regulations. The use of the models serves to (a) reduce the time and effort necessary to identify optimal packaging protection and (b) eliminate storage studies on materials with insufficient barrier properties to be reasonable candidates for the product.

DISTRIBUTION MODELS

The above models are based on storage conditions with a single temperature and relative humidity. Computers can be used to model changing conditions, either predicted or measured, to more accurately reflect real-world conditions (14). One such model applied average environmental conditions for key cities in the United States and abroad to predict warehoused product performance in these different locations. Not surprisingly, products distributed in colder climates exhibited longer shelf lives than similar products warehoused in warmer climates. The study also showed that products manufactured in cooler seasons exhibited longer shelf life than did the same products produced during the summer months. It was found that higher temperatures experienced earlier in the distribution cycle had a more pronounced impact than did the same temperatures experienced later. Such information could be used to either modify the packaging or the distribution environment (such as storage time or warehouse conditions) or even the shelf-life requirement (shorter for warmer climates, longer for cooler ones) for economic advantage.

The development of sensors and RFID tags offers additional capabilities for shelf-life modeling. Sensors currently exist to measure real-world conditions and transmit these data to a warehouse computer. Computers could be programmed to (a) recalculate remaining shelf life for stored products based upon their actual distribution and storage experience and (b) allow product pulls based upon remaining shelf life rather than actual storage time (First In, First Out). In this manner, products experience temperature abuse could be moved out more rapidly (or pulled if unacceptable and thereby improving quality and reducing consumer complaints). At the time of this writing, RFID technology and computer programs exist to initiate this proposed program (15), but the sesnsors are currently considered too costly for general product distribution. This scenario could easily change by the time this encyclopedia is published.

OTHER MODELS

Modeling of permeation through packaging films can be extended to evaluate more complicated scenarios than storage of a product in an ambient atmosphere. As long as permeation of gases and vapors remains the key shelf-life determining parameter, modeling of mass transfer is applicable. Modified atmosphere packaging (MAP) (see Modified atmosphere packaging) utilizes a gas mixture to extend the life of the product. The gas mixtures are composed of gases with different permeation rates and different concentrations in and out of the pacakge. Computer models can predict how the concentrations will change with time. Shelf life can be directly determined if the shelf life relates directly to a gas concentration. For example, if an oxygen-sensitive product would oxidize rapidly above a critical oxygen concentration, the time required for the oxygen concentration within the package to attain that level would determine the shelf life.

Another computer model that relates to shelf life involves controlled atmosphere packaging (CAP). CAP implies that the atmosphere is controlled during the life of the product and is typically employed in warehouse situations, particularly with fresh produce. CAP can also be used for a consumer package in which a combination of permeation characteristics of a film and respiration rates of a fresh product combine to create the desirable packaging environment. As the produce respires (takes in oxygen and expels carbon dioxide), the concentration of oxygen within the package will be depleted, and that of carbon dioxide will be enhanced. An impermeable package would quickly reach conditions of low oxygen and high carbon dioxide that would asphyxiate most produce. A correctly chosen permeable film, however, can result in a packaging atmosphere that slows senescence without killing the product, thereby enhancing shelf life. Computer models in this case are used to calculate the gas concentrations that result from the dual respiration and permeation effects. The concentrations are then compared with ideal CAP conditions for the particular product and thereby used to extend the shelf life of the product.

Various models have been developed to predict shelf life of products that are limited by microbial growth. Examples of some of these models are referenced in the bibliography (16–23).

BIBLIOGRAPHY

1. “21 Years of Manufacturing Excellence,” *Food Engineering*, September 10, 2003.
2. J. Fassl, “Editor’s Note: Keeping It Real, Keeping It Simple in Food Packaging,” *Food Engineering*, April 15, 2003.
3. K. S. Marsh, “Acceptance of Unacceptable Losses,” *Food Technology*, “Back Page” **57**(3), 96. 2003.
4. K. S. Marsh, “Value Added Packaging Can Make You More Competitive: Packaging & Economic Development,” Written for and published by the United Nations, International Trade Center, Geneva, Switzerland, 2005.

5. USDA Food Labeling Fact Sheet website, updated February 8, 2007, http://www.fsis.usda.gov/Fact_Sheets/Food_Product_Dating/index.asp updated.
6. D. Olds, "Shelf-Life Predictions Using Temperature as an Acceleration Factor," *Food Quality*, **28**, 000–000 (1996).
7. S. Gyeszly, "Shelf-Life Simulation Predicts Package's 'Total Performance'," *Package Engineering* **00**, 70–73 (1980).
8. K. S. Marsh, "Computer Simulation Speeds Shelf Life Assessment," *Package Engineering* **00**, 72 (1983).
9. K. S. Marsh, "Prediction of Packaged Product Shelf Life: Case Histories of Shortened Time to Market," in *Proceedings from the 1994 IoPP Technology of Packaging Conference*, Institute of Packaging Professionals, Herndon, VA, 1995.
10. K. S. Marsh, T. J. Ambrosio and D. K. Morton, "The Determination of Moisture Stability of a Dynamic System Under Different Environmental Conditions," in D. Henyon, ed., *Food Packaging Technology*, ASTM STP 1113, American Society for Testing and Materials, Philadelphia, PA, 1991, p. 13.
11. K. S. Marsh, J. Bitner, P. David and A. Rao, "Shelf Life Prediction Software finds Application with Ethical Drugs," *Packaging Technology & Science* **12**, 173 (1999).
12. K. S. Marsh, "Computer-Aided Shelf Life Prediction," *1984 Polymers, Laminations and Coatings Conference—Book 1*, TAPPI Press, Atlanta, GA, 1984.
13. *Handbook of Chemistry and Physics*, CRC Press, Inc., West Palm Beach, FL (any edition will have saturated vapor pressure charts).
14. K. S. Marsh, "Computer Model Looks at the Environment to Predict Shelf Life," *Food Engineering* **00**, 58 (1985).
15. K. S. Marsh, "Shelf Life Modeling in Real Time and Real Conditions," in *SLIM 2006 Shelf Life International Meeting*, special issue of the *Italian Journal of Food Technology*, Chiriotti Editori, Italy, 2007.
16. K. R. Anantha-Narayanan; A. Kumar, and G. R. Patil, "Kinetics of Various Deteriorative Changes During Storage of UHT—Soy Beverage and Development of a Shelf-Life Prediction Model," *Lebensmittel-Wissenschaft-und-Technologie* **26**(3), 191–197 (1993).
17. M. Ferrer-Gimenez, "[Determination of the Commercial [Shelf]-Life of a Dehydrated Food.]", *Alimentaria* **169**, 43–48 (1986).
18. S. S. Kurade and J. D. Baranowski, "Prediction of Shelf-Life of Frozen Minced Fish in Terms of Oxidative Rancidity as Measured by TBARS Number," *Journal of Food Science* **52**(2), 300–302, 311 (1987).
19. H. Einarsson, "Predicting the Shelf Life of Cod (*Gadus morhua*) Fillets Stored in Air and Modified Atmosphere at Temperatures Between −4 Degree and +16 Degree," in *Quality Assurance in the Fish Industry*, 1992, pp. 479–488.
20. B. R. Jorgensen, D. M. Gibson, and H. H. Huss, "Microbiological Quality and Shelf Life Prediction of Chilled Fish," *International Journal of Food Microbiology* **6**(4), 295–307 (1988).
21. G. C. Mead, "Predictive Aspects of Spoilage in Fresh Poultry Meat Including the Use of Biochemical Parameters and the Application of Mathematical Models," in *Seventh European Symposium on Poultry Meat Quality*, 1985, pp. 171–186.
22. G. J. Newell, "A New Shelf-Life Failure Model," *Journal of Food Protection* **44**(8), 580, 582 (1984).
23. M. G. Geoule, Jr., and J. J. Kubala, "Statistical Models for Shelf Life Failures," *Journal of Food Science* **40**(2), 404–409 (1975).

SHOCK

ROBERT M. FIEDLER, CPP
Robert Fiedler & Associates,
Minneapolis, Minnesota

The term *shock* describes a rapid change in something over a very short period of time. In the packaging field, this could relate to mechanical movements, sudden stops, or even rapid changes in environmental conditions such as thermal shock, when temperatures change rapidly with movement of products from inside to outside. We focus our discussions here only on the mechanical shocks related to the physical movement of products and packages.

The most common shocks experienced by packages and products result from handling drops. It is not the fall that hurts, but the sudden stop on impact with the solid ground. The suddenness of the shock is described as the duration of the impact. It is normally expressed in terms of milliseconds (ms) or $\frac{1}{1000}$th of seconds. Typical packaged product impact durations range from 2 to 50 ms from drops onto hard floors. The duration of the shock is dependent primarily on the amount of cushioning provided by the packaging materials used to protect the product and to some extent on the rigidity of the surface impacted.

The term *cushioning* is used to describe the effect of slowing the rate of change of the shock by increasing the time duration of the shock event. This is accomplished by allowing the product to stop over a longer period of time by beginning to stop it at a higher level above the point of final rest. Cushioning requires distance to provide the added time. Other articles in this *Encyclopedia* address the need of how to best design and shape the cushion to effectively use the available stopping distance provided by the cushion thickness to obtain maximum cushioning.

The rate of change of the speed of an item when it impacts is called the *acceleration rate* (or *deceleration rate*) of the impact. The greater the time duration of the impact, the lower the acceleration rate of the shock for impacts of the same speed. The impact acceleration rate is expressed in terms of *G* values, which are the dimensionless ratio between the acceleration in length per time squared and the acceleration of gravity in the same units—in effect, multiples of the acceleration rate of gravity (1*g*) on earth. The gravitational attraction of the earth is defined as 386 in./(s · s), 32 f^{t}/(s · s), or 9.8 m/(s · s).

Measured impact acceleration levels as discussed depend on the duration of the impact shock resulting from the cushion's effect. With no or very limited cushioning, acceleration levels can easily reach 500–1000*G*. With effective cushioning, acceleration levels can be reduced to 15–100*G*. How much cushioning is provided depends on the products' need for protection and the expected height from which the product will be dropped.

In simple terms, if an item is dropped from 30 in., it will fall at a rate of 1*G*, due to the effect of gravity. To stop the item at a rate of 1*G* would require an additional stopping distance of 30 in., assuming that you could bring it to a stop at a constant rate of 1*G* throughout the stopping distance. Fortunately, most products can be stopped at a much higher rate. In our example, if the product could withstand a stopping rate of $30G$, it could theoretically be stopped within a minimum stopping distance of 1 in. We will go on to see that by using cushions, it will actually be necessary to use much thicker cushions than the 1 in. that is the minimum stopping distance. This is due to the limited compressibility of cushions, 50–80% maximum, and to the nonconstant zero to peak–vs–constant peak deceleration rate.

Shock refers to the maximum rate of acceleration that is experienced during an impact often resulting from a free-fall drop. Obviously a packaged product may experience mechanical shocks resulting from several other events. A common event in shipping may be the impact shock received by a package when another packaged is dropped onto it. Or, it may result from being hit with a diverter on a conveyor belt during an automated sorting process. Whenever there is a sudden rate of change of velocity, an event called a shock occurs.

MEASURING IMPACT SHOCKS

Measuring shock levels requires the use of instrumentation and the understanding of what the instrumentation is presenting. Although mechanical shock recorders have been used in the past, they have been almost totally replaced with electronic instrumentation whenever accurate measurements of shocks are desired. Most shock-measuring devices rely on the use of accelerometer transducers. The accelerometers change the measured characteristics into electronic signals that can be displayed, analyzed, and recorded. Acceleration levels are presented as voltage proportional to the acceleration due to gravity. Usually this is in the range of 1–100 mV/g. The voltages are the result of the transducers converting the forces generated during an impact shock into an electronic signal. Since $F = ma$ (force = mass × acceleration), and the mass in the transducer remains constant, the measured force is directly proportional to the acceleration being experienced.

Accelerometer transducers typically are either piezoelectric or piezoresistive designs. Piezoelectric accelerometers rely on crystalline elements that generate an electronic signal when subjected to an applied force. Both accelerometer designs have their advantages and limitations, but it is sufficient to say that they are the most common means of obtaining records of acceleration levels experienced during impact shocks.

This discussion does not address the signal conditioning, power supplies, filtering, and calibration necessary to obtain records of shock acceleration levels. However, once the signals are obtained, they are often displayed as a function of time and are referred to as *shock signatures, shock pulses*, or *waveforms*.

SHOCK WAVEFORM ANALYSIS

Figure 1 shows a typical acceleration shock waveform resulting from an impact. We can discuss and characterize components of the recorded shock waveform. The first observation is that of the peak G level or the maximum acceleration experienced during the shock event. Since the entire recording is that of the acceleration levels, we must determine at what point to take a reading, and since it is usually the maximum faired acceleration that is of concern, that is what is most often used to define the shock acceleration level. Care must be taken when recording shock acceleration levels to ensure that any filtering used to clarify the shock signature does not adversely effect the peak G level recorded.

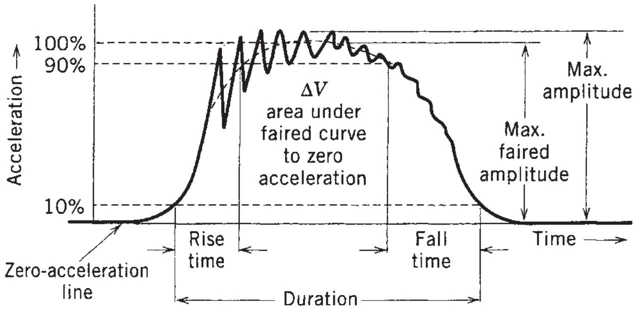

Figure 1. Standard pulse interpretation.

The second observation is that of the time over which the event occurred referred to as the shock pulse duration. By convention, the duration of a shock pulse is measured from points where the acceleration/time record is at a level of 10% of the peak G level. This is done because of the difficulty of precisely determining when the waveform actually crosses the baseline to start and stop the duration-time measurements. Shock pulse durations typically measured in package drop tests range from 2 to 50 ms.

Additional data that can be derived from an analysis of the shock waveform is the velocity change that occurs during the shock event. The velocity change is proportional to the area under the acceleration time curve. It is, in fact, the integral of the acceleration with respect to the time over the total duration of the shock pulse. The velocity change is the sum of the impact velocity from a package's fall plus the rebound velocity resulting from the impact energy stored in the cushion system being returned in the form of rebound motion.

The shape of a shock waveform can be very instructive as to the type of impact that has occurred as shaped by the cushion system's performance (see Figure 2). The waveshape of an elastic cushion acting as a linear spring will

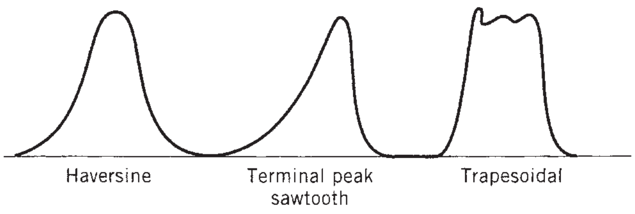

Figure 2. Typical shock waveform shapes.

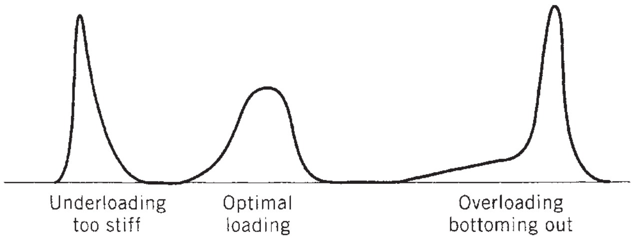

Figure 3. Cushion static stress loading concerns.

have a haversine, often referred to as a half-sine, waveshape. A nonrebounding cushion such as some corrugated pads may exhibit a waveform that can be described as a terminal peak sawtooth waveform on the basis of its visual shape. The acceleration (deceleration) reaches a peak when the object comes to rest with no rebound energy to create a rebound velocity. Another waveform shape that occurs during package testing is the trapezoidal waveform in which the acceleration reaches a peak G level that continues for a period of time as the cushion continues to crush. These trapezoidal waveforms are most often created by honeycomb or cylindrical cushion structures being crushed or in foam-in-place systems where the cushioning is provided as the material is being frangibly torn rather than compressed.

Seasoned package designers can often interpret what may be happening to a product in a cushioned package by analyzing the shock waveform observed during an impact (see Figure 3). A symmetrical half-sine waveform typically indicates that the static stress loading of the product on the cushion is in the optimum range for maximum cushioning. A waveform approaching a terminal peak sawtooth shock pulse with a sharp rise near that end compared with the beginning of the waveform may show that the product is bottoming out the cushion; the static stress loading may be too high for the cushion or the thickness of the cushion insufficient. A waveform showing a high spike at the beginning of the shock pulse may be indicating that the cushion is too stiff for the static stress loading being applied by the product. It may be like a diver making a belly flop smack on the water. The thickness of the cushion in this instance is immaterial since none of it is initially deflecting on impact.

CHARACTERIZING PROTECTIVE CUSHIONS

Cushioning materials used to protect products from shocks are normally characterized by their shock-transmitting attributes. "Cushion curve" data present the average level of the peak G level experienced on a simulated product dropped from a given height onto the given thickness of cushion (see Figure 4).

The static stress of the product on the cushion, expressed in psi, is then varied to determine the optimum loading range for the cushion. These data are derived empirically through an extensive series of drop tests during which the variables of drop height, cushion thickness, and loading (in psi) are systematically changed. The cushion-curve data thus presented can then be used as a starting point for predicting the effectiveness of a given cushioning material for a needed application.

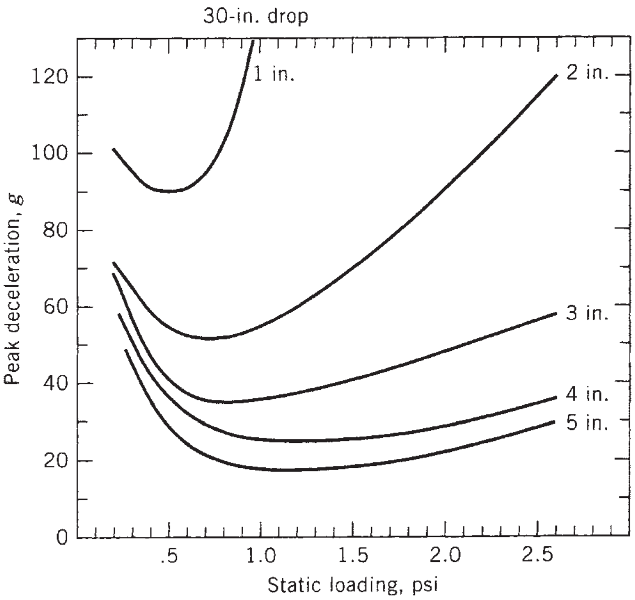

Figure 4. Dynamic cushioning curves.

From the cushion curve, the peak transmitted shock level is noted for given drop heights. When the maximum acceleration fragility of a product is compared with the cushion curves for the specified environmental drop height, both the minimum cushion thickness and optimum static stress loading can be determined. This provides the initial information for developing protective package systems for products.

THE DAMAGING EFFECT OF SHOCKS

The use of fragility testing is the most common means of determining a product's resistance to mechanical shocks. The process of fragility testing is described in much greater detail elsewhere in this *Encyclopedia* (see Testing, product fragility). The result of product fragility testing is the characterization of a product in terms of its resistance to mechanical shocks.

For a product to be damaged from mechanical shock, two conditions must occur simultaneously. The first is that the mechanical shock must have sufficient energy to cause damage. The second required condition is that the energy be imparted to the product at a rate exceeding the product's ability to absorb the energy without breaking. The first condition is expressed as the velocity-change side of the damage boundary; the second condition, as the acceleration side of the damage boundary (see Figure 5).

The velocity-change side of the damage boundary curve is an expression of how much energy is required to damage a product. This is directly related to the velocity

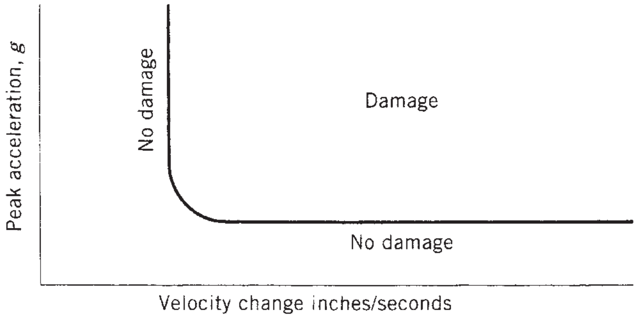

Figure 5. Typical damage boundary curve.

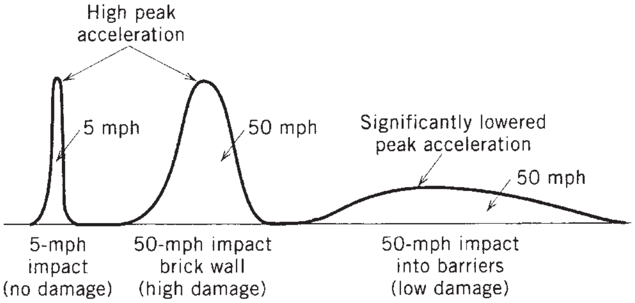

Figure 6. Effects of impact velocity and cushioning on damage in an automobile impact.

change or area under an acceleration-time shock-waveform record. Again, the predominant source of velocity in package shocks result from drops. Even if the peak acceleration level were very high, if the pulse duration were very short, the resulting velocity change might provide insufficient energy to damage a product. The product, in effect, does not respond to the high-intensity shock because the duration and energy input are too limited to cause any damage. It is similar to how the human eye can withstand the high intensity of a flash from a camera for a very short duration of time since the light does not have time to cause the eye to respond adversely.

The acceleration side of the damage boundary curve is of concern only with the prior condition, in which sufficient velocity change has been met, and is thus then a question of how fast the velocity change is being imparted to the product. A familiar analogy is that of an automobile in a crash. If the speed is slow, usually less than 5 mph (mi/h), no significant damage will occur because it is below the velocity-change damage boundary. However, if the automobile is moving much faster, say, 50 mph, sufficient energy is present and damage will certainly occur if the automobile is driven into a brick wall, causing the energy to be dissipated at a very high rate (acceleration level) when it comes to a sudden stop. If the same automobile traveling 50 mph is impacted into yellow safety barrels placed in front of the brick wall, the stop rate may be significantly less, resulting from the added stopping time, so that no significant damage occurs (see Figure 6). It should be apparent that without seat belts and airbags, people in a vehicle will continue moving at the 50-mph speed and not benefiting from the yellow barrier cushions stopping the automobile at a much lower rate.

Although both damage-boundary parameters—velocity change and acceleration—are critical in defining a product's fragility, the velocity-change side of the damage boundary is often considered to be sufficiently low for normally cushioned products, so that it will be exceeded during normal handling conditions. For that reason, often only the acceleration side of the damage boundary is referred to when one discusses the fragility of a product. This is technically insufficient; however, it is a significant improvement over working without any product fragility data.

It is next to impossible to determine the fragility of products through observations or even calculations. It is essential to conduct fragility testing to assess the fragility of any given product. However, there are certain categories of products that because of the severity of their use environments, they typically have fragility levels that reach a minimum stated acceleration fragility level. Table 1 lists the typical minimum fragility levels of products found in these categories. Stated again, without testing, one cannot know the fragility of a product. However, it may be sufficient to test only to a minimum-assurance fragility level. In other words, it may be sufficient to subject a product only to a minimum acceptable acceleration shock level to ensure that it at least withstands the minimum assurance level. This then becomes the basis for developing protective packaging.

One critical issue must be addressed when discussing the shock fragility of a product. That is the manner in which the force of a mechanical shock is imparted into a product. As an example, the acceleration portion of a damage boundary for a fresh chicken egg is 35–50*G*, depending on how it is impacted on the side or end of the egg. This is based on testing and imparting the shock

Table 1. Benchmark Fragility Levels of Products

G Factor	Classification	Examples
15–25	Extremely fragile	Precision instruments, first-generation computer hard drives
25–40	Fragile	Benchtop and floor-standing instrumentation and electronics
40–60	Stable	Cash registers, office equipment, desktop computers
60–85	Durable	Television sets, appliances, printers
85–110	Rugged	Machinery, durable appliances, power supplies, video monitors
110	Portable	Laptop computers, optical readers
150	Handheld	Calculators, telephones, microphones, radios

using a flat impact surface. If, on the other hand, the shock is imparted to the fresh egg using a surface conforming to the shape of the egg, the acceleration fragility level exceeds 150*G*. The same holds true for many products. How the cushions transmit shock into the products, on corners, edges, or flat surfaces, can significantly effect the critical fragility of the product.

Product-fragility tests must be conducted with an eye toward the final package cushion configuration that will be used. It almost makes one wonder what comes first, the cushion or the egg.

SUMMARY

In summary, shock occurs usually as the result of stopping a fall. Shocks are characterized by their duration, peak acceleration, velocity change, and waveshape. Waveshapes are the signatures of shock events that can be analyzed to characterize impacts and to analyze protective cushioning. Protective cushions are characterized as cushion curves that depict the cushion's transmitted peak acceleration levels for given drop heights and cushion thicknesses. Product-fragility testing measures the product's resistance to shocks defining in terms of both velocity sensitivity and resistance to peak acceleration shock levels. The use and analysis of shocks provide the measurements essential to engineer products and packages that can withstand their shock-generating environments.

BIBLIOGRAPHY

General References

ASTM D1586, *Method of Test for Dynamic Properties of Package Cushioning Materials*, American Society for Testing and Materials, 1996.

ASTM D3332, *Standard Test Methods for Mechanical-Shock Fragility of Products, Using Shock Machines*, American Society for Testing and Materials, 1996.

ASTM D4003, *Standard Test Methods for Programmable Horizontal Impact Test for Shipping Containers and Systems*, American Society for Testing and Materials, 1996.

ASTM D4168, *Standard Test Methods for Transmitted Shock Characteristics of Foam-in-Place Cushioning Materials*, American Society for Testing and Materials, 1996.

ASTM D5276, *Standard Test Method for Drop Test of Loaded Containers by Free Fall*, American Society for Testing and Materials, 1996.

ASTM D5487, *Standard Test Method for Simulated Drop of Loaded Containers by Shock Machines*, American Society for Testing and Materials, 1996.

ASTM D5277, *Standard Test Method for Performing Programmed Horizontal Impacts Using an Inclined Impact Tester*, American Society for Testing and Materials, 1996.

C. M. Harris and C. E. Crede, *Shock and Vibration Handbook*, Editions 1–4, McGraw-Hill, New York, 1961.

International Electrotechnical Commission, *Basic Environmental Testing Procedures, Part 2: Tests-Test Ea: Shock*, Publication 68-2-27, 2nd ed., 1972.

R. D. Newton, *Fragility Assessment Theory and Test Procedure*, Monterey Research Laboratory, Inc., Monterey, CA, 1968.

SKIN PACKAGING

Burt Spottiswode
DuPont P&IP
Wilmington, Delaware

The innovative, technological developments in skin packaging over the past several years have opened up a whole new arena for this packaging concept. The major developments that have been made in skin packaging are better quality skin board [solid bleached sulfate (SBS) and recycled] and improved printing techniques. Now, with the new specialized printing equipment that provides higher resolution [133 dots per inch (dpi)], you can obtain beautiful-looking graphics with great sales appeal. Also, the new advances in the separation of the colors allow you to print just about anything on a skin board. Improvements in printing, along with the advancements made in skin equipment and the development of new high-performance skin packaging films, has helped to greatly expand the market opportunities for skin packaging.

As the proliferation of mass merchandising outlets and self-serve retailing continues to expand, the growth of skin packaging will continue because of its merchandising appeal to both the consumer and retailer. Today, manufacturers are striving for a cost-effective eye-appealing package that sets their product apart from competition and enhances the product. They are looking for packaging that will put new life into old products to gain additional market share. A package that offers product visibility and creates impulse sales to help make the buying decision easier. Skin packaging provides all this and in addition has the merchandising advantage of being peggable.

There are two market opportunities for skin packaging: retail and industrial. For the retail visual-carded packaging market, skin packages are typically merchandised by hanging them on a peg. This enhances space use in that the package requires less shelf space and provides better use of the space allocated by offering "more facings" and "good vertical display." Skin packaging is a cost-effective alternative to other visual carded packaging, i.e., blister packaging, clam-shells, foldover blisters, and Stretch Pak, because it requires no tooling in that the product itself becomes the mold over which the film is drawn down and around by vacuum.

Industrial skin packaging differs from visual carded packaging in that its primary purpose is to protect products in transit. Products as divergent as computer tapes, lamps, service repair kits, fans, and tabletops may be skin packaged instead of using die-cut corrugated, foam-in-place, foam peanuts, and other stabilizing or dunnage materials. Industrial skin packaging offers high throughputs and full visibility to check for tampering or missing components and allows quick identification, usually at significant cost reduction. It also considerably reduces the amount of waste that has to be disposed of and is therefore more environmentally friendly.

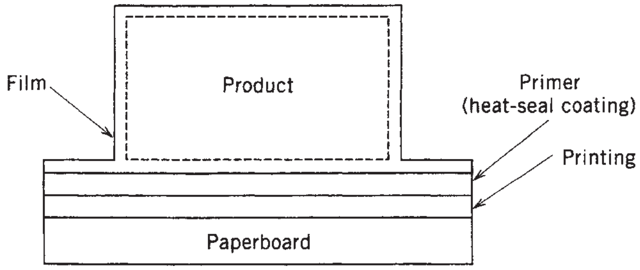

Figure 1. A typical skin package.

SKIN-PACKAGING MATERIALS AND EQUIPMENT

Skin packaging involves placing a product on a substrate material such as paperboard or corrugated board (see Figure 1). When the film is heated to the proper softening temperature, it is draped over the product and the substrate material and a vacuum draws the film down and around the product and into the pores of the board to make a secure and attractive-looking package.

A skin package has four components: the plastic film, a heat-seal coating, printing ink, and a paperboard or corrugated substrate card. The product itself becomes the mold over, which the heated plastic film is drawn down and around. This is one of the major differences between blister and skin packaging, in that in blister packaging you have to form a blister that requires a mold, for not only the thermoforming machine but also the blister packaging machine if you are buying preformed blisters.

Skin packaging begins with a sturdy card made of high-porosity paperboard or corrugated paperboard. After printing the board, which, with the developments in printing technology and the higher-quality skin board available today, you can now get beautiful four- to six-color graphics, is coated with a heat-seal dispersion coating. Today, most printers use an ethylene vinyl acetate (EVA) water-based coating. The product is placed on to the board, and then the product and board are moved onto the platen. The plastic film is held tightly in place by a clamping frame, directly below the heater, which is located above the platen.

At the beginning of the packaging cycle, the product is usually loaded onto a printed, coated skin board that is then moved onto the platen of the machine to be skinned. The plastic film that is held in the frame above the product on the skin board is heated to the proper softening temperature and is then lowered over the product and the skin board. As the frame is being lowered, the vacuum system is energized, and as the film is draped over the product and the board, the vacuum pulls the film tightly around the product and into the pores of the skin board, making a tight, attractive-looking package. The hot film instantly activates the coating on the board, and when a milky white coating is used, it becomes crystal clear when coming in contact with the hot film. The paperboard card with the product skinned to it is then moved to the die cutter, which die-cuts it into individual packages (see Figure 2).

Plastic Film. One of the least expensive components of the total package, the film is one of the most important. It is the film that holds the product on the board. The film also reinforces the board and provides a glossy surface for enhanced graphics. The film of DuPont Surlyn ionomer resin is the most widely used film in the retail visual carded packaging market with some low-density polyethylene (LDPE) and EVA coextruded films used for the low-end retail market. The film of Surlyn is a tough clear film and enhances the graphics and appearance of the package to help create impulse sales. It has excellent abrasion resistance and also has a low shrink force, which eliminates any unsightly board curl. Polyethylene (PE) is used

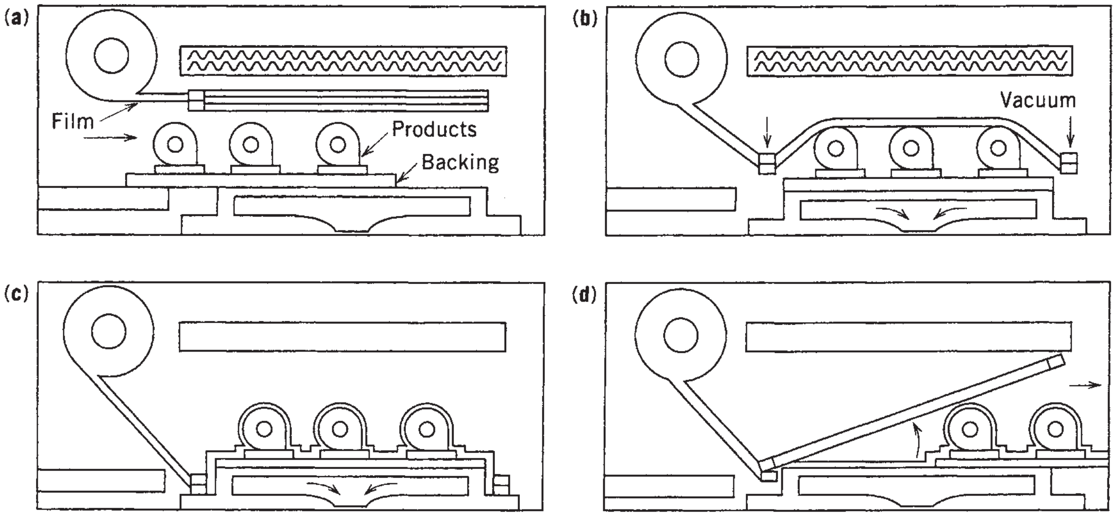

Figure 2. (**a**) Product and backing are moved onto the vacuum platen of skin-packaging machine and film is heated; (**b**) heated film is draped over product and backing; (**c**) vacuum suction draws film around product and backing, creating a skin-tight package; (**d**) finished board is moved out of the machine.

primarily for the industrial skin-packaging market where optical properties are not as important as in the retail visual carded packaging market. PE is not as clear as film of Surlyn and requires more heat and dwell time. It shrinks more of the cooling cycle and has a higher shrink force than film of Surlyn, which causes board curl. It is a tough film and adheres well to primed paperboard and corrugated. PE is less expensive but requires a heat-cycle time that is twice that of Surlyn; therefore, Surlyn can be more cost effective because of the increase in productivity.

The film gauge that is needed will depend on the weight of the product, the draw required, and the abuse that the package is likely to encounter. It is recommended that the film be corona treated to a level of 42 dyn to further improve the adhesion of the film to the board. If the film is surface-treated on one side, then the roll label should designate which side is treated. The treated side should be down to come in contact with the board.

Primer. Most skin-packaging films (Surlyn, LDPE, etc.) do not exhibit good natural adhesion to ink or board. Printed and unprinted boards are, therefore, coated with heat-sealable primers to provide strong, long-term adhesion of the film to the ink/board surface.

EVA films and coextruded films containing EVA have good initial board/ink adhesion. However, actual package failures have demonstrated that EVA to ink/board bonds will deteriorate with time. The deterioration is accelerated by high ambient temperatures (like those usually experienced during shipping).

Primers are generally aqueous EVA-based dispersions specifically formulated to provide a good bond between the film and board. The primers soak into the board fibers and porous inks. This maximizes mechanical and chemical adhesion between the film, ink, and board.

Application of Primer. The manufacturers of dispersion coatings can supply specific recommendations for applying their primers to achieve a good fiber tear bond between the film and the board. The general properties of commercially available dispersions are described in Table 1.

Dry coatings are applied commercially with a gravure cylinder. The applied coating should be of the proper weight and one that will not seal the surface of the sheet. Too light a coating will result in poor adhesion. Too heavy a coating will block the pores in the board and ink. This will cause poor evacuation and film forming.

Table 1. Properties of Aqueous Dispersions of Skin Packaging

Solids (weight %)	40–50
Viscosity	500–100 mPa
pH	9.5–10
Odor	None
Appearance unfused	Clear or milky white
Appearance fused	Colorless
Dilution	Water as required
Flammability	Nonflammable
Drying	130–230°F (55–110°C), variable

Board Priming. Board priming is usually done most economically by a company setup to print and coat the boards in one operation.

Ink. It is important to use the correct compatible heat-resistant ink to ensure good adhesion to the board (see the Inks article). Using the wrong inks or the wrong board/ink/primer combinations can interfere with the ink's adhesion to the board because of one or more of the following chemical or physical problems:

Chemical Incompatibility. A primer-to-ink bond failure can occur if the ink and primer are chemically incompatible.

Unstable Pigment, Vehicle, or Binder. An ink cohesive failure will occur if the pigment, vehicle, or binder is not stable under heat.

High Board Porosity. The ink may fail to adhere to the board if the ink has a low binder and vehicle:pigment ratio and the board is very porous. The binder and vehicle are absorbed into the board, and the poorly bound pigment remains on the surface. This phenomenon is known as "chalking."

Ink/Board Incompatibility. The ink may not bond to the board if the ink and board are incompatible. This is often caused by contaminated board.

Ink/Primer Incompatibility. A primer-to-ink bond failure will occur when the ink contains lubricants, waxes, or oils incompatible with the primer.

When starting a new job, it is important that preproduction ink evaluation tests be made before any board is printed in large quantities. This is a simple precaution to assure that the ink system is compatible with board and film. This test consists of having proofs prepared by the printer with the ink and board intended for use. Sample skin packages should be prepared with these proofs, checking for proper evacuation of air and adhesion.

Paperboard. Three types of board are used for skin packaging:

- Fourdrinier board (solid bleached sulfate)
- White lined recycled board
- Corrugated board

The board must be compatible with the ink and primer system, be porous enough to permit a vacuum to be drawn through it, and be strong enough to hold and display the product (see the Paperboard article).

By specifying board density and the weights of any coatings to be used, you can ensure acceptable porosity for your skin board, specify the nature of any coatings or treatments to ensure compatibility of the board with inks and primers, and ensure that the board is strong enough for the application by specifying board type and thickness. The strength of the board is enhanced by the skin-packaging film used. Film of Surlyn, with its superior strength, will produce a stronger package than competitive skin packaging films, so you may sometimes be able to specify a slightly thinner board gauge.

SBS Board. Solid bleached sulfate board for skin packaging is available in four calipers: 0.020, 0.024, 0.026, and 0.028. The specifications for a SBS board that will be acceptable in skin packaging are as follows:

Density. The density should be low enough to produce a board porosity that will allow a suitable vacuum to be drawn through the skin card. This porosity can be attained with a density that is equal to or less than 1.9 kg/($m^2 \cdot$ mm) (9.8 lb/1000 ft^2-point).

Finish. A soft finish is recommended for SBS board.

Brightness. The board should have a brightness of 80 or better (General Electric (GE) brightness scale). The printer may have to adjust the inks used to accommodate variations in board tint.

Sizing. Waxes, lubricants, release agents, and surface treatments are not recommended for this board and should be avoided.

Clay Coating. Clay coating is not recommended. If a clay coating is used, then the coating weight should be less than 0.49 kg/100 m^2 (1.0 lb/1000 ft^2).

Clay Binders. Clay binders must be heat stable. Protein binders are acceptable. Styrene latex binders should be avoided.

WHITE LINED RECYCLED BOARD

Density. White lined recycled board for skin packaging is available in five standard calipers: 0.028, 0.032, 0.036, 0.042, and 0.054.

The density of white lined recycled board should be low enough to produce a board porosity that will allow a suitable vacuum to be drawn through the card. This porosity can be attained with a density that is equal to or less than 2.1 kg/($m^2 \cdot$ mm) (11.1 lb/1000 ft^2-point). A denser board will require perforations.

Finish. A number 2 or number 3 finish is preferred, although number 4 may be acceptable (according to boxboard standards of the National Paperboard Association). Finish refers to density and surface; higher numbers are smoother and more dense.

Brightness. The board should have a brightness of 72 or better (GE brightness). Printers may have to adjust their inks to accommodate variations in board tint.

Gross Ink Treatment. Gross ink treatment is not recommended for white lined recycled board. If gross ink is used, then the treatment should not contain any release agents or wax-based material.

Binders. No wax or styrene binders should be used on white lined recycled board.

Clay Coating. Clay coating is not recommended for white lined recycled board. If a clay coating is used, then the coating weight should be less than 0.49 kg/100 m^2 (1.0 lb/1000 ft^2).

Clay Binders. Clay binders must be heat stable. Protein binders are acceptable. Styrene latex binders should be avoided.

CORRUGATED BOARD

Density. Nearly all common corrugated boards are porous enough to permit skin packaging. Normal bleached facing and unbleached facing made from 90-lb liner are satisfactory. The time required to permit 100 mL of air to pass through the board, as measured with a Gurley densometer (TAPPI method T460 OS75), should be less than 100 s. Laminated facings should generally be avoided. All flutings are acceptable; types B, C, and E are the most popular for skin packaging.

Finish. If a printed label is applied to the corrugated board, then all the considerations that apply to a solid bleached sulfate board should apply to the label. The adhesive used to bond the label to the board should not form a continuous film as this will destroy board porosity. Pressure-sensitive-type adhesives should be avoided. Converted starch adhesives are acceptable.

Sizing. Waxes, lubricants, release agents, and most surface treatments are not recommended for this board and should be avoided. A normal starch calender coating is acceptable.

Clay Coating. Clay coating is not recommended for corrugated board. If a clay coating is used, then the coating weight should be less than 0.49 kg/100 m^2 (1.0 lb/1000 ft^2).

Clay Binders. Clay binders must be heat-stable. Protein binders are acceptable. Styrene latex binders should be avoided.

Machinery. Skin-packaging equipment is available in a wide range of models and sizes. The most inexpensive manual models will provide only the basic requirements needed to skin package a product. A manual system will normally run at speeds of 2–3 cycles per minute. The number of packages produced per minute on these systems will depend on the skin-board size and the number of individual cards that can be cut out of the board. The standard skin-board sizes are 18 in. × 24 in., 24 in. × 30 in., 30 in. × 36 in., and 36 in. × 36 in.; however, there are skin-board sizes available up to 30 in. × 96 in. Depending on the size of the package, you can normally get 10–12 individual packages out of an 18-in. × 24-in. skin board. Semiautomatic and fully automatic systems can run at 5–12 or more cycles per minute depending on the sophistication of the machine.

The heating system on a skin machine is mounted above the platen, and a radiant-heat source is used to soften the film. The source of radiant heat is usually a series of electric resistance rods, wire coils, or quartz infrared heat lamps. A diffuse reflecting surface directs all available radiation toward the film and platen and avoids the formation of hot spots.

The vacuum system is connected to the base of the platen and is capable of drawing through the substrate board during the vacuum cycle. There are two types of vacuum systems: turbine and positive displacement. The turbine system is the least expensive and is generally used on the manual and inexpensive skin models. This system has a turbine blower (like the type used in commercial vacuum cleaning equipment) and can draw a large volume of air at a relatively low vacuum pressure. This system works most effectively with board that has good porosity.

The positive displacement vacuum system consists of a pump and a surge tank that can evacuate the air between the film and the board rapidly with a strong force. This system is used for the faster, more sophisticated skin machines. In some cases, a dual-vacuum system (turbine and positive displacement) is needed, such as for high-profile and odd-shaped products and for board with poor porosity. It is sometimes worthwhile to purchase both systems if you have a wide range of products to package.

A roller-type or hydraulic die cutter cuts the skin-packaged board into individual packages and die cuts the hanger hole used to hang the card on a hook. Stainless steel or polypropylene is an acceptable cutting surface.

High-speed fully automatic skin packaging systems can meet the packaging speed requirements of today's packaging applications while solving the concerns traditionally associated with skin packaging. They come equipped with smooth acceleration "no roll" product infeed, adjustable high/low vacuum controls, quick changeover (<5 min), automatic card feeding, ease of loading with templates, and automatic off-load boxing systems to meet industry's high-volume, just-in-time (JIT) production requirements. The new quiet hydraulic die cutters come equipped with in-press die-saver sensor systems to eliminate product damage. Automatic product placement systems are also available today for high-speed automatic packaging.

Applications. A wide variety of applications are being skin packaged today, although not all products are suitable for skin packaging. The product's shape and composition will usually determine whether it can be skin packaged successfully.

For example, flimsy products that would be crushed by the force of the vacuum or articles that would stick to the skin-packaging film should not be skin packaged. However, in the past where you could not package round or unstable ferrous metal parts, i.e., ball bearings, because of the difficulty of maintaining the product on the card prior to film contact, today you can with moving magnetic plates. You can also package parts that protrude through the back of the card.

The weight and configuration of the product will usually determine the strength of the board and the gauge of the film that is needed. Heavy, high-profile items will require stronger board and heavier-gauge film.

Skin packaging for the retail visual carded display market offers several benefits for the packager, retailer, and consumer. The packaging operation is quick and uniform, the film's clarity and sparkle enhance the product, and the display method spurs impulse buying because of product visibility and the attractive colorful graphics.

SLITTING AND REWINDING MACHINE

R. W. Young
John Dusenberry Co.
Randolph, New Jersey

Flexible plastic packaging materials generally do not have perfectly flat surfaces. The material in a parent roll contains stretch lanes and varies in gauge by about 1–5% across the web width. Slitting and rewinding such rolls requires equipment that can control the rewinding speed of each slit roll independently (1). The rewinding process is complicated even more by air entrainment into the coils of the rewinding rolls, which separates the outer convolutions and allows them to slip laterally. Winding difficulty caused by this phenomenon increases when handling high-slip films or films with smooth surfaces. The primary aim of every slitter design is to provide apparatus to deal selectively or generally with one or more of the diverse products presented to it. All designs are based on center winding (1), surface winding (2), or a combination of both.

CENTER WINDING

Center Winder (Duplex Winder). The most widely used and versatile slitter is a duplex stagger center winder or two-bar winder (see Figure 1). The web tension at the unwind of the machine is isolated from the rewind section by driven rollers in the slitting section of the machine. These rollers positively control web speed, opposing any overdraw by the rewind. For most applications, the rewinding is done on differential-rewind (slip-core) mandrels to maintain suitable rewind tension on each slit roll despite stretch lanes in the web and unequal diameter buildup caused by gauge bands commonly found in plastic webs (1). Individual riding rollers forced against each of the rewinding rolls minimize air entrainment into the rewinding roll. For winding paper products, the riding roller also has a surface-winding effect that increases roll hardness without using excessive rewind tension (3).

These machines are suitable for handling web widths up to about 80 in. (2032 mm), rewind diameters up to

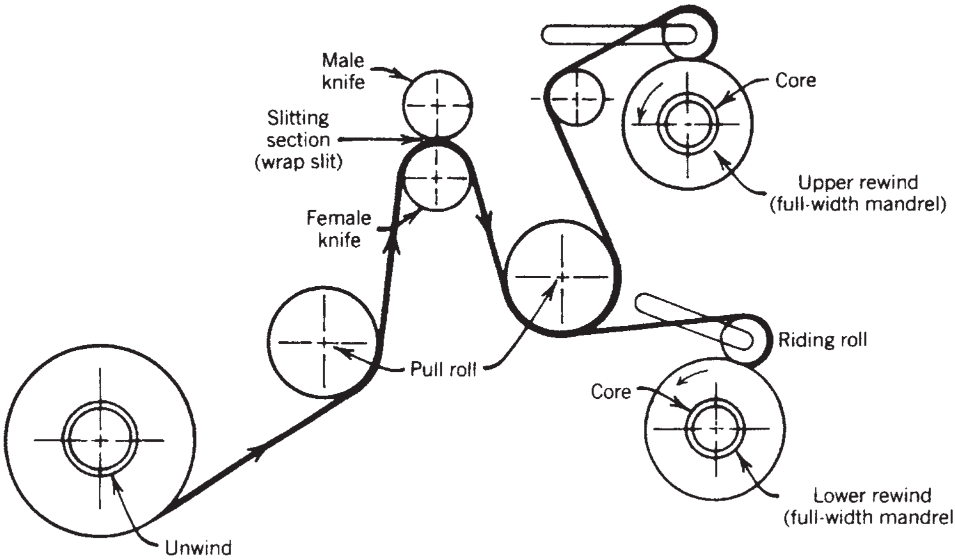

Figure 1. Center winder (duplex winder) illustrating stagger differential winding principle.

24 in. (610 mm), and web speeds of ≤1500 ft/min (~460 m/min). They are especially suited for narrow-width slitting. The productivity of machines with removable rewind mandrels can be increased by using two pairs of mandrels so that the slitting operation can continue while the alternative pair is being serviced. Removable mandrels commonly require two operators or one operator and a hoist for handling into and out of the machine. Machines equipped with nonremovable cantilevered mandrels permit one operator to remove the slit rolls, recore, and restart winding quickly without mandrel handling (see Figure 2). The choice of systems depends on the size and number of slit rolls per setup. Maximum production is achieved by mounting cantilevered mandrels into two-station turrets (see Figure 3). With automatic cutoff and restart of web around the core, these machines can slit and rewind a web emerging from an extruder on a continuous basis.

Individual-Rewind-Arm (IRA) Surface-Center Winders. IRA-winder design is based on both center- and surface-winding principles (see Figure 4). The design stresses the ability to control the surface-contact force and rewind torque of each rewinding roll individually. Each rewind core is supported by chucks (one or both driven by a torque-controlled motor) supported on pivoted arms arranged in stagger-wind fashion on each side of a winding drum. The handling of rewind mandrels is eliminated (1). The contact force between the rewind roll and the winding drum is exerted by air cylinders controlled manually or by microprocessors. For better control of roll hardness, this force can be programmed as a function of rewind diameter and web speed.

These machines are suited for processing webs in excess of 80 in. (2032 mm) in width and for winding in excess of 24-in. (610-mm) diameter. Maximum design web speed is about 2000 ft/min (610 m/min). Actual production operating speed is frequently limited to ≤1200 ft/min (365 m/min) because of web properties, vibration of the

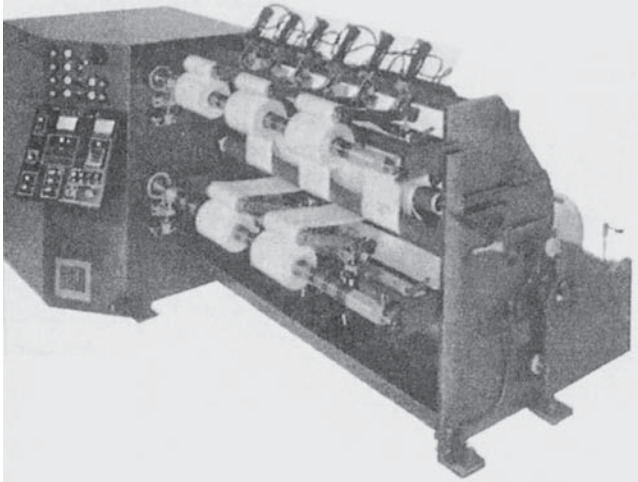

Figure 2. Center winder with cantilevered rewind mandrels and integral unwind station.

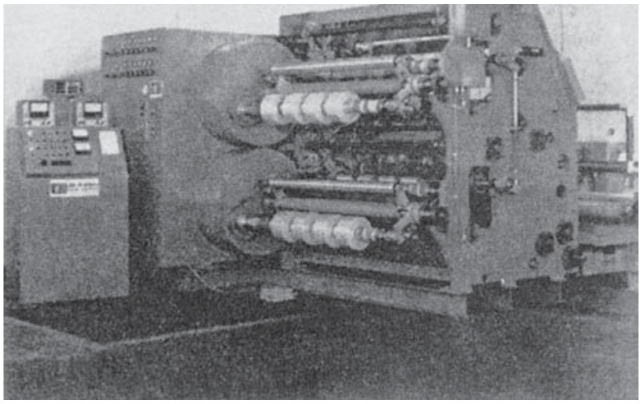

Figure 3. Center winder with cantilevered rewind mandrels mounted in turrets for continuous differential winding.

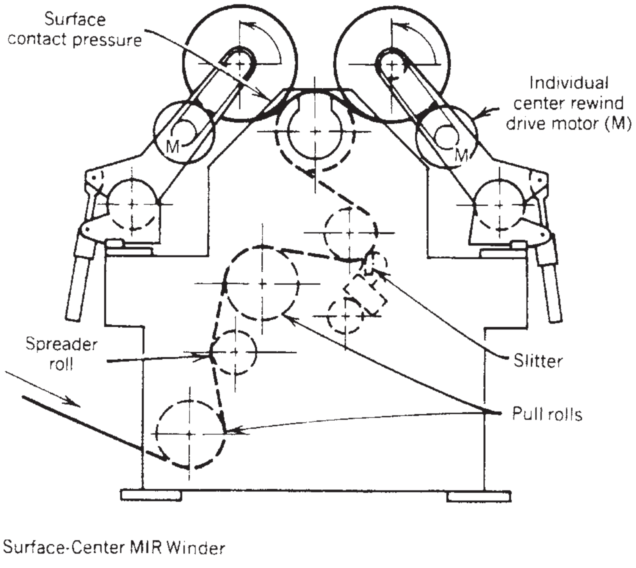

Figure 4. IRA surface-center winder.

rewound roll (4), parent-roll eccentricity, or off-machine roll-handling backup (see the Roll handling article). Doffing of the rewound rolls can be done in sets with overhead hoist and special “grabbing” devices. Recent designs feature rotating rewind arm support beams, allowing the rewound rolls to be lowered and released directly onto low-bed, wheeled dollies. This is called doffing to the floor (see Figure 5).

IRA Center Winders. This winder is similar to the IRA discussed above except that an individual contact roller, supported by a pair of pivoted arms, contacts the rewound roll in place of a full-width winding drum (see Figure 6). The contact roller is urged against the rewound roll by air cylinders. The winding tension is developed by a rewind motor driving each core. The primary function of the contact roller is to minimize air entrainment. Sensors detect the buildup of the rewind roll, which causes the rewind arms to move outward and maintain a relatively fixed position of the contact roller. This winding method is more responsive to the control of stretch lanes in the web and significantly reduces the roll vibration sometimes associated with high-speed surface winders (4). For best results, the contact force and rewind torque must be programmed by microprocessors as a function of web speed and rewind diameter, thereby giving the desired hardness and uniformity in the rewound roll at web speeds upward of 2000 ft/min (610 m/min). These machines also feature doffing to the floor.

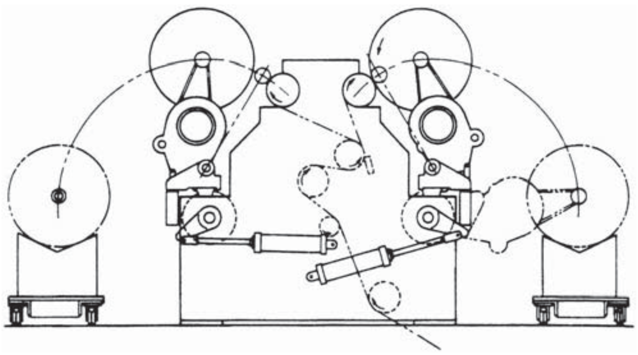

Figure 5. IRA surface-center winder with doffing to floor.

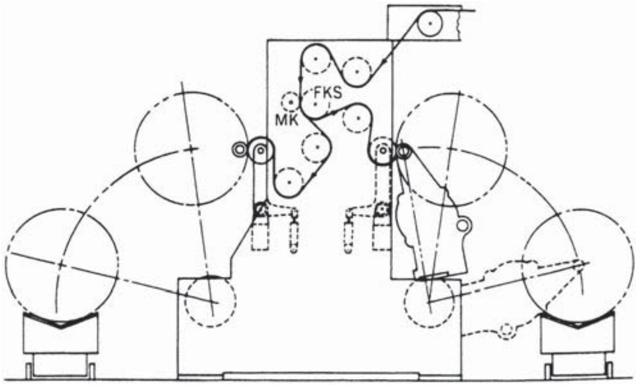

Figure 6. IRA center winder with riding roll and doffing to floor.

SURFACE WINDERS

Many versions and sizes of slitting equipment employ the surface-winding principle (2, 5). For a detailed discussion of larger-size rewinders, see Ref. (6). The machine most widely used for general converting is the two-drum winder with riding roll (see Figure 7). It is commonly used for slitting plain paper and paperboard, as well as many printed, coated, and laminated paper products.

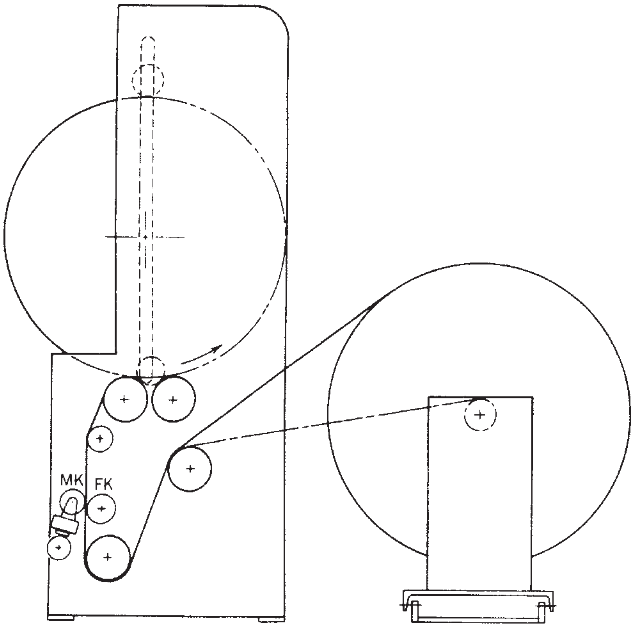

Figure 7. Two-drum surface winder with kiss-shear slitting.

Good-quality paper has the following physical properties conducive to surface winding: uniformity of gauge, freedom from bags, relatively rough surface with medium friction coefficient, high modulus of elasticity, and high degree of compressibility. The density of the finished roll is determined by a combination of constant unwind tension and down force on the riding roll (7).

The medium-size, general-purpose converting slitter has the following advantages:

1. The controls and construction are relatively simple.
2. It can wind to large-diameter buildup ratios.
3. It can wind coreless or on almost any diameter core.
4. It winds on one mandrel or without mandrel.
5. The slit-width changeover is accomplished primarily by relocation of knives.
6. It runs at relatively high web speeds, commonly ⩾2000 ft/min (610 m/min).

It also has the following disadvantages:

1. The risk of slit rolls interleaving make it difficult or impossible to separate the slit rolls. Bowed spreader rollers can alleviate roll-separation problems (8, 9).
2. It lacks versatility for winding baggy or off-caliper webs.
3. It is unsuitable for winding paper with slippery, e.g., silicone, coatings.
4. Some grades of paper develop a washboard surface on the periphery of the rewound roll during winding, thereby causing vibrations and restricting operating speed (4).
5. Operator skill is necessary to keep scrap rate low on some products.

UNWINDING

Many types of unwind stands are available, from simple shaft-type units with manual side shift to large shaftless turret unwinders (10) with automatic web guiding (11, 12). Friction brakes usually provide the holdback torque (13). Regenerative direct current (dc) drives are occasionally required for parent-roll acceleration, as well as holdback (14). The choice of automatic tension controllers for maintaining constant unwind tension during acceleration and deceleration, as well as compensating for decreasing unwind diameter, includes load-cell sensing rollers (15); dancer roller sensors, which are recommended for use with eccentric parent rolls (16); and open-loop microprocessor control based on real-time calculations of diameter and weight of parent roll. It has been common practice to use overhead hoists for loading parent rolls into operating position, but hydraulic lifts integral with the unwinder are frequently preferred (17).

TENSION CONTROL—REWIND

Tension control for surface winders simply requires constant tension control from the unwind stand and has a secondary effect on rewind roll hardness. The tension control of center winders is much more complex because tension is the primary control factor. Rewind buildup ratios of less than 5:1 may require only constant torque (decreasing tension) windup for many products. However, large buildup ratios and tension-sensitive products require either constant tension or programmed tension (18). Depending on the design of the machine, this may require automatic control of pressures to differential-rewind mandrels or air-operated slip clutches, or control of reference voltages to dc rewind motors (19). When differential winding at high speeds and large buildup ratios, it is necessary to automatically reduce the rotations per minute (rpm) of the rewind mandrels as a function of rewind diameter. The profile of the tension pattern as a function of diameter must be determined empirically. Microprocessor control is ideal for exploratory profile studies and for maintaining repeatability once the desired results are achieved.

SLITTING

Rotary shear knives can be used to slit virtually all packaging-web products. For simplicity of setup and sometimes for cleaner cutting, razor blades are used for plastics thinner than about 0.005 in. (127 μm). For better control, especially when taking narrow trim cuts, the web is wrapped around and is positively supported by a grooved roll at the point of slitting. Similarly, shear slitting is done with the web wrapped around the so-called lower or female knife shaft, known as wrap slitting. If frequent changes of slit width are required when shear cutting, it is desirable to run the web tangentially over the female knife (called "kiss slitting") (1) (see Figure 7). The prime consideration in the slitting section of the machine is ease of changing slit widths. Equipment is being introduced to accomplish this automatically, but it is not yet in widespread use on the average converter-type slitter primarily because of cost and space requirements.

OTHER CONSIDERATIONS

In addition to the basic features discussed above, many others require consideration in a slitter specification. The more common items include automatic web guiders, spreader rolls, predetermining rewind footage counters, multiple rewind and main drives, special roller coverings, static eliminators, expanding unwind and rewind mandrels, core-locking differential-rewind mandrels, roll-unloading devices, provision for web inspection, web-splicing devices, safety guards, emergency trip cables, and trim-removal equipment. Last, but not least, increasing effort is being made to automate nearly every operational and setup function associated with slitter operation. About half of all slitters sold requires some design modification or accessory to meet the special needs of the user. New models are constantly being introduced to handle new products, reduce costs, increase productivity, and enhance the quality of slit rolls (20).

The performance of a slitter depends not only on the basic physical properties of the web but also on the quality consistency of parent rolls. It is difficult to measure some of the more important characteristics, let alone predict how they will affect the slitting operations. Two supposedly identical generic products, each from a different manufacturing source, can exhibit surprising performance differences. Furthermore, problems can be expected when attempting to handle webs that deviate significantly from the norm in physical properties or when web speed and roll size exceed state-of-the-art limits. Consequently, it is always wise to check, if possible, the performance of actual parent rolls on existing demonstration equipment to be assured that performance requirements can be achieved.

Nomenclature

Bags	Undulations in a web that otherwise should be a flat surface, usually occurring in lanes of various widths in the machine direction of web. These bands frequently occur where a thickness variation is above average relative to the rest of the web (1).
Buildup ratio	The diameter of a rewound roll divided by the outside diameter of its core.
Doffing	Process of removing or unloading wound rolls from a winder.
Draw	The distance a web must travel unsupported between two web transport rollers.
Gauge	Thickness or caliper of a web. Sometimes expressed in units of points (mil, 0.001 in. or 254 µm); gauge (0.00001 in. or 0.25 μm); or micrometers (0.001 mm or 10^{-6} m).
Gauge band	A machine-direction strip or band of above-average thickness in a web evidenced by a peripheral circumferential bulge on the periphery of a web roll (1).
Guide, edge	Automatic web guide using the edge of a web as reference. Those using an air nozzle as a sensing device are sometimes called air guiders (12).
Guide, line	Automatic web guide using photocells to track a reference line on a printed web (12).
PLI	Pound force per lineal inch (1bf/in. = 175.1 N/m). Unit of measure of web tension or line contact force of riding roll against a rewinding roll.
Roll	A coiled spool of web material usually wound on a paper core.
Roll, parent	A large roll from which smaller rolls are slit and rewound. Also called mill roll, master roll, mill reel, bundle roll, unwind roll, and stock reel.
Roll, rewind	Roll resulting from a slitting or trimming operation. Also called coil, spool, and bobbin.
Roller	General term for any type of rotating cylinder serving as a web-transport device to support and guide a web through a slitter.
Roller, riding	An idler roller that maintains contact with the surface of a rewinding roll. Also called touch roller, top-riding roller, contact roller, layon roller, ironing roller, and squeeze roller. Its purpose is to minimize air entrainment into a rewinding roll.
Slitter	Short term for slitter/rewinder. It is generally understood to include an unwinder.
Winding, differential	A method of stagger winding on two-bar (duplex) center winders whereby the rewinding cores are allowed to slip with controlled torque between keyed spacer sleeves on an overrunning rewind mandrel with the aim of winding each slit strip with equal tension regardless of parent-web defects. Also called slip-core winding (1).
Winding, stagger	Winding alternate slit strips on each of two rewind mandrels so that adjacent slit strips are not wound side by side on the same axis or mandrel (1).
Winding, taper-tension	A reduction of winding tension in a controlled manner from the center of a rewinding roll outward with the aim of giving the desired hardness and uniformity in the roll (18).

BIBLIOGRAPHY

R. W. Young, “Slitting and Rewinding Machinery” in *The Wiley Encyclopedia of Packaging*, 1st ed., John Dusenbery Company, Inc., Randolph, NJ, pp. 583–587.

1. J. R. Rienau, *Techniques of Slitting and Rewinding*, John Dusenbery Co., Randolph, NJ, 1979.
2. J. D. Pfeiffer, “Mechanics of a Rolling Nip on Paper Webs,” *TAPPI* **51**(8), 774 (Aug. 1968).
3. J. D. Pfeiffer, “Nip Forces and Their Effect on Wound-in Tension,” *TAPPI* **60**(2), 115 (Feb. 1977).
4. D. A. Daly, “How Paper Rolls on a Winder Generate Vibration and Bouncing,” *Pap. Trade. J.* **48** (Dec. 11, 1967).
5. D. Satas, *Web Processing and Converting Technology and Equipment*, Van Nostrand Reinhold, New York, 1984, p. 383.
6. L. Rockstrom, *Control of Residual Strain and Roll Density by Three Winding Methods*, Cameron Machine Co., New Brunswick, NJ, 1964.
7. J. Colley, A. J. Kelley, and P. J. Schnackenberg, *Appita* **36**(4), 288 (Jan. 1983).
8. R. G. Lucas, *Pap. Age*, 9 (Sept. 1972, Nov. 1972).
9. Ref. 5, p. 414.
10. H. L. Weiss, *Coating and Laminating Machines*, Converting Technology Co., Milwaukee, WI, 1983, p. 326.
11. Ref. 5, p. 404.
12. H. L. Weiss, *Control Systems for Web-fed Machinery*, Converting Technology Co., Milwaukee, WI, 1983, p. 277.
13. *Ibid*., p. 105.
14. Ref. 12, p. 207.
15. Ref. 12, p. 61.
16. Ref. 5, p. 400.
17. Ref. 10, p. 336.
18. S. E. Amos, “Winding Webs: A Case of Constant Tension versus Constant Torque,” *Pap. Film Foil Converter* p. 56 (Sept. 1970) and p. 62 (Oct. 1970).
19. Ref. 12, p. 239.
20. R. Aylott, *Pap. Film Foil Converter* **58**(10), 128 (Oct. 1984).

General References

D. Satas, *Web Processing and Converting Technology and Equipment*, Van Nostrand Reinhold, New York, 1984. Contains an exhaustive bibliography and comprehensive review of converting machinery.

H. L. Weiss, *Coating and Laminating Machines* (441 pp.) and *Control Systems for Web-fed Machinery*, Converting Technology Co., Milwaukee, WI, 1983. Two exceptionally comprehensive reference sources.

SMART BLENDING TECHNOLOGY

David A. Zumbrunnen
Laboratory for Advanced
Plastic Materials and
Technology, Department of
Mechanical Engineering,
Clemson University, Clemson,
South Carolina

The development of high-performance packaging materials is often accompanied by increased complexity in manufacturing equipment. For example, multiple screw extruders and intricate dies are used to impart several functionalities to multilayer films. Because of polymer incompatibility, tie layers are frequently needed to prevent layer delamination, thereby further increasing material costs and system complexity. In contrast, *smart blenders* are machines where polymer melts that may include solid additives can be formed during blending into various finescale structural arrangements upstream of dies so multiple physical properties can be optimized simultaneously (1). Multilayer extrusions can consist of hundreds or even thousands of thin submicron-thick layers, so the technology may find special application to nanocomposite materials. Smart blenders can be used for manufacture of cast or blown film, as well as other extrusion forms. Properties of extruded film are optimized using smart blenders' ability to alter fine-scale internal structure during manufacture. A blended plastic can offer advantages over those that are coextruded. For example, one polymer type in a blend can serve as a matrix to give mechanical integrity to a film containing other plastics, chemical additives, or solids that are added to obtain other desired properties such as electrical conductivity or permeation resistance.

Smart blending denotes an ability to deliberately transform deformable material domains in response to generated flow fields in melts into fine-scale structures that may have a useful purpose. For application to packaging, a desirable outcome of blending is the formation in polymer melts of shapes having large interfacial areas such as layers, ribbons, and platelets in lieu of droplets often obtained by mixing. *Chaotic advection* (2) is an enabling recent subfield of fluid mechanics for smart blending because it provides a means to either (a) controllably stretch, fold, and redistribute melt domains and evolve a multilayer structure leading to derivative morphologies or (b) indirectly manipulate solid additives. The term *advection* denotes movement. It is now known that passive markers in a fluid can move chaotically even in response to simple, externally imposed flow fields. In Figure 1 (3), the region of space enclosing an initial minor component body becomes stretched and folded in response to the periodic motions of surfaces which can be geometrically simple. Such shape changes are fingerprints of chaotic motions and are sometimes referred to in mathematical studies of chaos as baker's transformations or horseshoe mappings. In the inset photograph, developed and incipient folds in a continuous polyethylene layer are evident in a polystyrene matrix (4). The circular hole corresponds to the location of a stir rod of a batch device that was rotated to generate chaotic advection. With more prolonged chaotic advection, stretching and folding would continue such that the polystyrene and polyethylene become converted to layers folded about each other in a type of encapsulated, interlocking blend structure (5). A variety of blend morphologies are obtainable by *progressive structure development* (6), defined as the formation of structured materials via sequential insitu transitions from one structure type to another. This feature is shown in Figure 1, where ruptures transform multilayers to a dual phase continuous (i.e., sponge-like) structure that can fragment to yield platelet shapes and droplets in the minor component. Other blend morphology types are also producible (7, 8).

DESCRIPTION OF A SMART BLENDER

Smart blenders are scalable and are available for various products including cast film or tubular extrusion forms, such as blown film and piping (9). The technology makes possible the manufacture of blown film with a wide variety of microscopic internal structures in polymer components and additives in lieu of only a few layers obtained from coextrusion. Common elements of smart blenders are stir

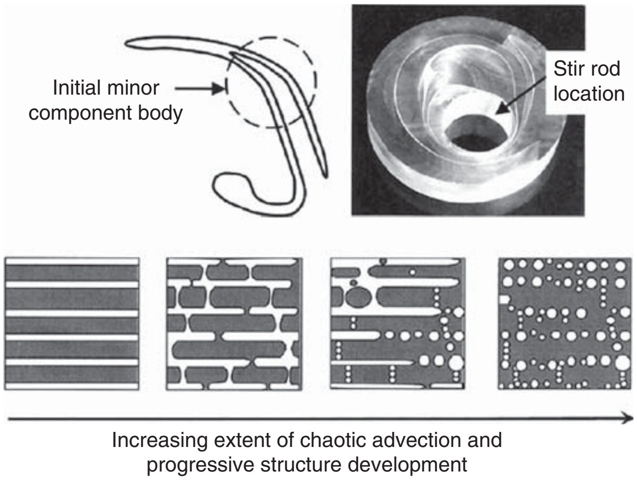

Figure 1. Stretching and folding of polymer melts by chaotic advection and transformation of resulting multilayers to derivative blend morphologies by layer rupture (4).

rods that undergo simple motions leading to chaotic advection of melt contained in them and features to promote progressive structure development. An example of a smart blender for producing cast film is shown schematically in Figure 2 (3). This smart blender consists of a barrel with an oval crosssection and circular stir rods. Separate melt flows of polymer A and polymer B are supplied by screw extruders where the relative mass flow rates of each polymer define the prescribed overall composition of an extrusion. (Additional polymer types or additives can be similarly provided.) When desired, one or more melts can be a precompounded masterbatch that consists of a polymer and a solid additive. The stir rods are rotated by computer-controlled variable speed motors following specific algorithms. As an example of one algorithm, the stir rods are rotated alternately and periodically by three rotations to generate time-varying velocity fields within the smart blender (8). Mechanistically, the path followed by a fluid particle becomes sensitive to its precise location as velocity fields change, thereby resulting in chaotic motion and the characteristics associated with chaos.

The extent of melt structuring by progressive structure development is selectable via a number *N* of periodic rod speed alterations while the melt is resident in the smart blender (3). The insitu layering and progressive structure development are represented in Figure 2 by the alternating black and white stripes adjacent to the stir rods as the combined melts flow toward an attached die. A lesser amount of chaotic advection is specified to extrude fewer and thicker layers, whereas thin and numerous layers or derivative blend morphologies result from longer specified durations of chaotic advection during the melt transit to the extrusion point. Details of such in situ structural transitions have been described in experimental and computational studies (8, 10, 11). Computationally generated results are also shown in Figure 2. In these simulations, a minor component polymer is represented by discrete particles so that layers have a granular appearance. In the leftmost inset figure, duration of progressive structure development is short, so partial blending occurs. By continuing the periodic rod rotations, chaotic advection leads to larger numbers of layers and improved compositional uniformity at smaller length scales. In effect, both polymers are folded about each other, although layering is most visually apparent in the minor component as in the polyethylene layer in Figure 1.

Process parameters that are needed to produce particular types of blend morphologies can be compiled in morphology maps. Such maps can be based on batch or online monitoring of extrusions, theoretical models, and rheology characteristics of polymer resins. If maps are

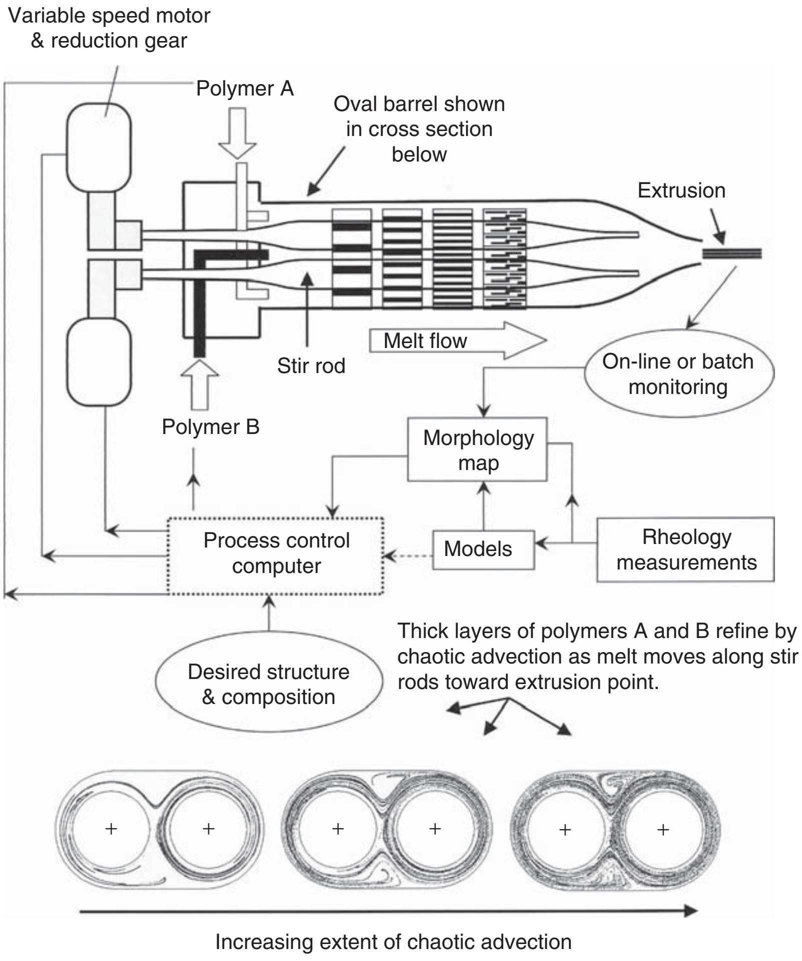

Figure 2. Schematic of a smart blender system used to produce cast film and computational simulations of layer formation for increasing extents of chaotic advection (3).

available, machine operators with the assistance of a process control computer can set up a smart blender for manufacturing extrusions with particular properties. In their absence, such as when new polymer types are being considered, structure–property studies can be done by producing extrusions with differing extents of chaotic advection.

APPLICATIONS

The intrinsic characteristic of chaotic advection to transform melt domains into layers (Figure 1) underpins applicability to packaging. However, to instill a spectrum of physical properties in a minimum of layer types, other blend morphologies can also be desirable. A few varied applications are described below. Because smart blending is a new technology, additional applications can be anticipated.

Barrier Films

Permeability results are given in Figure 3 in terms of the smart blending parameter *N* for extruded films composed of ethylene vinyl alcohol (EVOH) copolymer and linear LDPE (LLDPE) (12). For $N < 4$, EVOH and LLDPE melts are converted to few, thick and localized layers such as in the photograph inset in Figure 1. With further chaotic advection, the fine multilayer structure in the scanning electron micrograph in Figure 3 arose. Layers are parallel to the film surface. Oxygen permeability is reduced for $N \approx 5$ by factors of about 240 and 400 in blends containing 20% or 30% by volume EVOH. The extruded films have a layer-ribbon blend morphology where components are folded about each other (Figure 1). Due to continuity in the LLDPE component, delamination between the layers is less problematic than in coextruded films even though tie layers are not included. The polymer components are mechanically interlocked by virtue of the blend morphology. For more extensive chaotic advection and correspondingly larger *N* in Figure 3, the multilayers transform to EVOH fibers and droplets. Notably, droplet morphologies such as at $N \approx 14$ typically result from mixing and are associated with little or no measurable improvements in barrier properties.

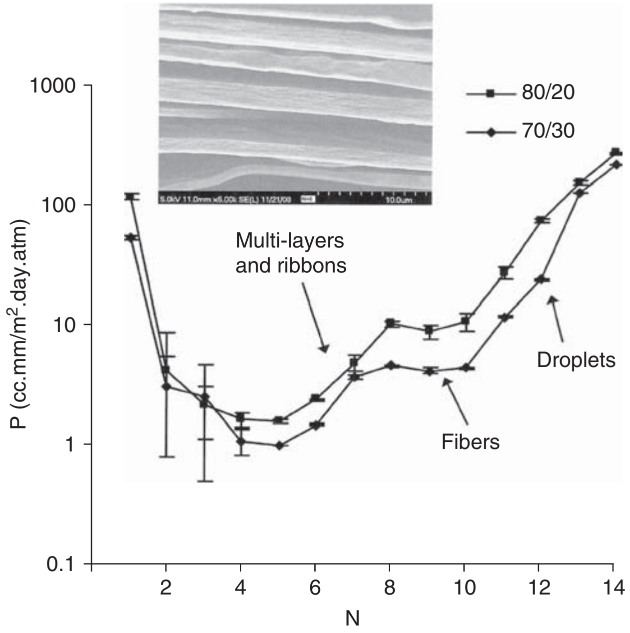

Figure 3. Reductions in permeability of EVOH-LLDPE film with 80/20 and 70/30% by volume EVOH for differing extents of chaotic advection imposed by smart blender in terms of the process parameter *N* (12).

Nanocomposites

Clay particles consist of very thin (~1 nm) platelets having high frontal area ($0.01\,\mu m^2$) and very low mass diffusivity (13). When platelets are liberated from particles in a process known as exfoliation and blended with a plastic, molecular diffusion can be impeded. Smart blenders can be especially effective when applied to such materials because platelets can be localized and oriented within numerous layers also of nanoscale thicknesses (14). An example of a novel clay nanocomposite film is shown in Figure 4 (3, 15). To produce this nanocomposite, a masterbatch of polyamide-6 and 4%-by-weight exfoliated nanoclay and polyamide are supplied to the smart blender as polymers A and B (Figure 2) in a 1:1 ratio to obtain extruded films of 150-μm thickness with an overall 2% nanoclay loading. The nanocomposite has a hierarchical structure consisting of oriented platelets localized within multiple layers separated by matrix polyamide layers. Internal dimensions of the hierarchical structure (i.e., adjacent distances between oriented platelets and layer thicknesses) can be adjusted via the online control features of smart blenders for property optimization. In the example in Figure 4, the extruded film contained about 350 discrete polyamide and platelet-rich layers. Platelets are oriented such that their frontal areas are parallel to the film surface. Due to orientation and localization within multiple layers, platelets can induce changes to polymer crystal morphology and crystallinity (16). Orientation of thin or oblong particles such as platelets results from the alternating shear flows caused by stir rod rotations. Orientation can occur more volumetrically because chaotic advection effectively shuffles melt to different locations in the smart blender (Figure 1). In effect, platelets, carbon black agglomerates, nanotubes, or oblong particle clusters orient in response to stretching and folding to reside with the layers containing them. Excellent platelet dispersions such as also shown in Figure 4 can be obtained by increasing the extent of chaotic advection in the smart blender such that the thicknesses of the polyamide layers become vanishingly small. Physical properties of nanocomposites are not solely an outcome of the nanoscale dimensions of solid additives but may also be derived from the physical arrangements of the nanoscale additive.

Toughened and Electrically Conducting Plastics

Because smart blenders can form polymer melts into various microscopic structural types even at a fixed

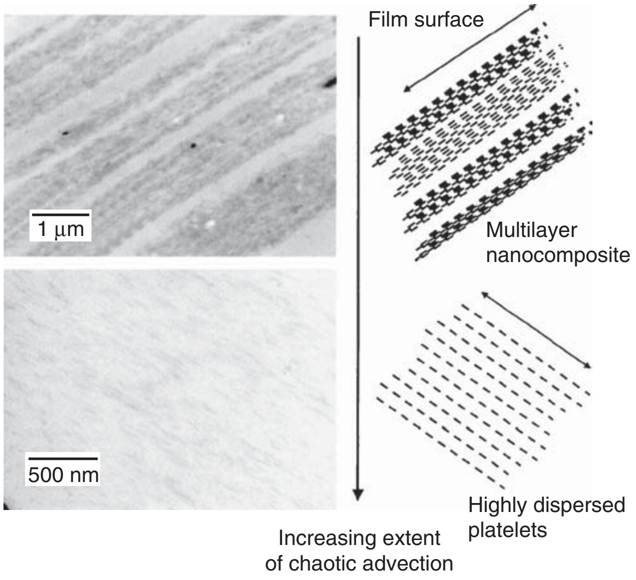

Figure 4. Examples of clay nanocomposite films with oriented and localized platelets within multilayers or well-dispersed platelets (3, 15). (Structural arrangements are clarified by graphical representations.)

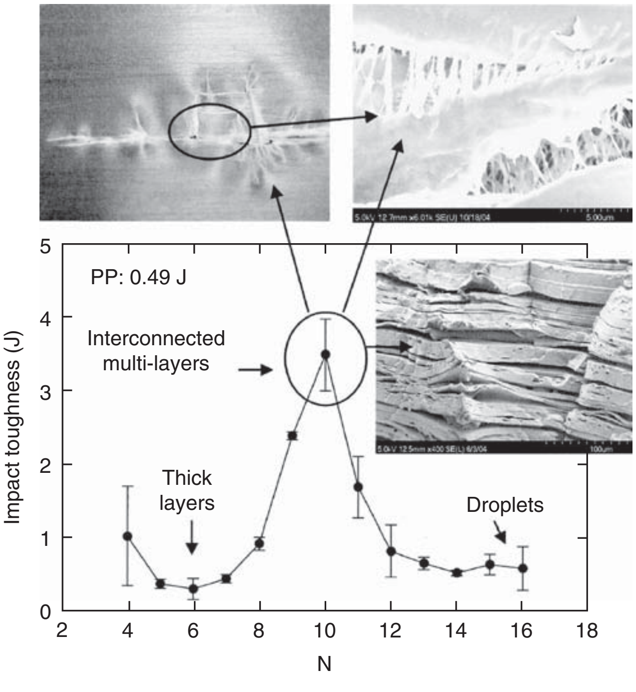

Figure 5. Improvements in the toughness of PP film by adding 20% by volume EPDM and forming EPDM into multilayers corresponding to $N \approx 10$ [3]. Films with thick layers (such as produced by coextrusion) or with droplets (resulting typically from mixing) failed by fracturing in contrast to the film shown where dart impact energy was effectively absorbed by forming interconnecting EPDM tendons. In the scanning electron micrograph, the EPDM layers were removed with a selective solvent to discern film structure.

composition, the physical properties of a film or other extrusion type can be optimized. An example is given in Figure 5, where the impact toughness by the dart drop method (ASTM D-882) of polypropylene (PP) film is enhanced by adding 20% by volume ethylene–propylene–diene monomer (EPDM) (3). Injected PP and EDPM melts are first converted in the smart blender to layers. The layers decrease in thickness and become more numerous for a larger amount of chaotic advection (i.e., for higher N). Due to their small thicknesses, the PP layers deform readily upon impact. Toughness increases for $N = 10$ are due to the formation of abundant, submicron ligaments between layers. Toughness of the blend increases by 760% in comparison to PP. A predominant fiber morphology at $N = 12$ and a droplet morphology at $N = 16$ have comparatively much smaller increases.

Smart blenders can also be used to form networks among particles. If conducting particles are used such as carbon black, electrically conducting plastics result (17, 18). Particle interactions are more likely when particles are arranged into striations or localized within multilayers such as in Figure 4. The extent of interconnectivity among networks is selectable via process control, so a variety of conductivity properties can be obtained.

BIBLIOGRAPHY

1. O. Kwon and D. A. Zumbrunnen, *Polym. Eng. Sci.* **43**, 1443–1459 (2003).
2. H. Aref, *J. Fluid Mech.* **143**, 1–21 (1984).
3. D. A. Zumbrunnen, R. Subrahmanian, B. Kulshrestha, C. Mahesha, *Adv. Polym. Technol.* **25**, 152–169 (2006).
4. O. Kwon and D. A. Zumbrunnen, *J. Appl. Polym. Sci.* **82**, 1569–1579 (2001).
5. D. Zumbrunnen, M. Ellison, and B. Gomillion, U.S. Patent No. 6,902,805 B2 (to Clemson University), 2005.
6. D. Zumbrunnen and O. Kwon, U.S. Patent No. 6,770,340 B2 (to Clemson University), 2004.
7. D. A. Zumbrunnen, K. C. Miles, and Y. H. Liu, Composites Part A **27A**, 37–47 (1996).
8. A. Dhoble, B. Kulshreshtha, S. Ramaswami, and D. A. Zumbrunnen, *Polymer* **46**, 2244–2256 (2005).
9. D. Zumbrunnen, U.S. Patent No. 7,377,684 (to Clemson University), 2008.
10. Y. H. Liu and D. A. Zumbrunnen, *Polym. Compos.* **17**, 187–197 (1996).
11. A. S. Joshi and D. A. Zumbrunnen, *Chem. Eng. Commun.* **193**, 765–781 (2006).
12. V. A. Chougule, R. M. Kimmel, and D. A. Zumbrunnen, in *Proceedings of the 63rd Annual Technical Conference*, Society of Plastics Engineers, Boston, MA, 2005. pp. 2976–2981.
13. A. Usuki, Y. Kojima, M. Kawasumi, A. Okada, Y. Fukushima, T. Kurauchi, and O. Kamigaito, *J. Mater. Res.* **8**, 1179–1184 (1993).
14. D. Zumbrunnen, U.S. Patent Application 10/965,753 (to Clemson University), 2005.
15. C. Mahesha and D. A. Zumbrunnen, in *Proceedings of the 64th Annual Technical Conference*, Society of Plastics Engineers, Charlotte, NC, 2006. pp. 491–496.

16. Y. Li and H. Shimizu, *J. Polym. Sci. Part B: Polym. Phys.* **44**, 284–290 (2006).
17. R. I. Danescu and D. A. Zumbrunnen, *J. Thermoplast. Compos. Mater.* **11**, 299–320 (1998).
18. V. A. Chougule and D. A. Zumbrunnen, Chem. Eng. Sci. **60**, 2459–2467 (2005).

Further Reading

H. Aref, Phys. Fluids **14**, 1315–1325 (2002).

A. LaCoste, K. M. Schaich, D. A. Zumbrunnen, and K. L. Yam, Packag. Technol. Sci. **18**, 77–87 (2005).

A. J. Lichtenberg and M. A. Lieberman, *Regular and Chaotic Dynamics*, 2nd edition, Springer-Verlag, New York, 1992.

J. M. Ottino, P. DeRoussel, S. Hansen, and D. V. Khakhar, Adv. Chem. Eng. **25**, 105–204 (2000).

D. A. Zumbrunnen, S. Inamdar, O. Kwon, and P. Verma, *Nano Lett.* **2**, 1143–1148 (2002).

D. A. Zumbrunnen and T. Sakai, *Plast. Age Mag.* **53**, 76–85 (2007) (in Japanese).

SMART PACKAGING

PAUL BUTLER
Smart Packaging Consultant,
Packaging Materials &
Technologies Ltd, Henley-on-
Thames, Oxon, United Kingdom

INTRODUCTION

Smart packaging is generally defined as packaging that provides additional levels of useful functionality beyond protecting, containing and providing information about the product (1). This new type of packaging has been classified in many other ways—“active,” “intelligent,” “diagnostic,” “functional,” and “enhanced” are all terms that have been used over the last few years—but a simpler view, and the one used here, is to collect these subsets together under the all-embracing term “smart packaging.” This definition of smart packaging therefore encompasses aspects of packaging design, the use of smart materials in packaging, and the incorporation of mechanical, chemical, electrical, and electronic forces, or combination of these, within the package. It includes packaging that is active in some way with or without communication to the user. And it also includes the most common form of electronic smart packaging, RFID-enabled packaging.

The approach and technologies involved in making packaging smarter depend to some extent on the ultimate beneficiary, whether the supply chain, the brand owner, or the consumer. Table 1 shows the three main beneficiaries plus some generic smart packaging approaches applicable to each. Clearly, there are significant overlaps, particularly between the brand owner and the consumer.

In this chapter we concentrate on smart packaging for the consumer (2) and look at the various ways in which it can provide new beneficial functionality and new levels of convenience. Established brands are most likely to benefit from developing and introducing innovative smart packaging features since in doing so they can grow and sustain their position and prevent the erosion of brand value. But first we look briefly at societal and other factors driving these developments.

Table 1. Main Beneficiaries and Smart Packaging Approaches

Main Beneficiary	Smart Packaging Approaches
Supply chain	Helping to prevent errors
	Providing full track and trace
	Helping retain/monitor product quality/safety
Brand owner	Making counterfeiting more difficult
	Helping retain/monitor product quality/safety
	Providing shelf appeal and differentiation
	Creating new and unique products
Consumer	More convenient packaging
	Making products more effective in use and preventing waste
	Providing new and unique products
	Helping monitor product quality/safety

MORE DEMANDING CONSUMERS AND THE CONSUMER/PACKAGING INTERFACE

We live in a rapidly changing world where yesterday’s status quo is no longer good enough. For consumers, the existing packaging functions of bringing the product safely to the shelves and then being part of the buying decision are largely taken for granted. Now in addition, consumers expect packaging to be easier to open and use, to be more convenient, and to deliver more functionality in support of busy lifestyles. To offer convenience, consumers want first and foremost packaging improvements that save time, are easy to use, and reduce stress on an already busy life.

The problem starts at the retail store or supermarket, where typically a sea of colored packaging noise greets shoppers: row upon row of near identical packaged products that fail to engage the senses, lift the spirits, educate, inspire, or entertain. With a few exceptions, desperation appears to be the major driver in new product/package introductions, underpinned by an apparent strategy of just throwing new products at consumers and seeing what happens. Real innovation appears hard to find, a view supported by the “Build a Better Mousetrap” New Product Innovations of the Year data, provided by Productscan® (3). Genuine packaging innovation needs to move up marketing and advertising budgets in terms of importance, and there is evidence that this is happening for many of the major global brands, who recognize the importance of the first moment of truth interaction with consumers at point of sale.

Unfortunately, the current consumer/package interface does not always impress post-purchase, and there are opportunities for significant improvements to this interface. Consumers are weary of those packs that make demands on their time and attention, are difficult to open or dispose of properly, and contain instructions in font sizes that cannot easily be read. Openability, or lack of it, can cause a high level of frustration with today's consumers, so much so that it has its own media tag: "wrap rage" (4). The problem is particularly acute for people in the 50+ age population (5), who will demographically be a growing proportion of tomorrow's consuming generation.

Readability is another issue for packaging as increasing demands for more product information drive more and more printed text onto packaging to be deciphered by a population with increasing numbers of elderly consumers many with reduced visual acuity. Better means of communication at the consumer/packaging interface are essential, and this suggests that future trends will involve the use of sound and visual imaging to augment the printed text on packaging.

A further growing demand on packaging revolves around the search by consumers for packaging/product offerings with new functional benefits. On-the-go lifestyles are creating new consumer demands that rely heavily on packaging that is lightweight, portable, and easy-to-open without the aid of tools, but also resealable. Future packaging must become smarter and offer and deliver a more compelling value proposition to the consumer, particularly in terms of convenience and on-the-go support to increasingly active lifestyles.

IMPROVING CONVENIENCE IN PRODUCT USE

User convenience is a major driver in the development of smart consumer packaging. The simplest smart packaging innovations are those involving elements of packaging design and the appropriate use of materials to create packaging that, without complex functionality, fulfills a very real need for consumers. Yet examples of this type are not that commonplace despite the fact that there is generally little, if any, added cost required to achieve the design functionality. The common feature of smart packaging by design is that there has been an element of insight into how the consumer uses or operates the packaging, and this core value has remained central to the package designer's brief.

A collection of some designs that meet consumer needs for convenience is shown in Figure 1. The shaped lightweight 600-mL paint container is easy to open and easy to hold in one hand; the shaped spout dispenser makes it easy to direct toilet cleaner where it is needed; the smart straw on the aerosol can does the same thing for an oil-based water dispersive spray, and the single-serve PET white wine bottle has the convenience of an integral glass that also acts as the bottle closure.

Unique products, tailored to a consumer's requirements, are possible where the packaging allows variable ratio dispensing of two different products. An innovative dispensing pack that allows dual dispensing in variable proportions from 0% to 100% has been developed by German company Variotec. Termed Dialpack, the packaging requires a simple twisting of a dial to adjust the pump dispensers in each chamber to allow different ratio mixes of two components with high mixing accuracy. The two substances are drawn from their two separate cartridges by the pumps, mixed by a static mixer, and then dispensed from a pump- or spray-style closure. Cartridges can be purchased and replaced according to need. By rotating the dispenser head, the consumer can then dispense the required proportions of the two products. Sunscreen and sun-tanning preparations are available in this type of packaging, as is Dave's Adjustable Heat Hot Sauce (Figure 2). Very hot sauce is contained in one compartment while milder sauce is in the other, allowing consumers to adjust the ratio to their own personal taste.

Figure 1. Some examples of smart packaging by design.

The convenience of microwave heating and cooking has led to a number of smart packaging innovations. Simplest is the addition of a thermochromic label to indicate when a product like pancake syrup is at the right temperature for serving (Figure 3).

More sophisticated packaging with data matrix bar coding permits a microwaveable-ready meal to be precisely heated and browned for the table. The packaging code is scanned into the smart microwave oven (Figure 4), which then automates the optimum mix of convection oven and microwave heating to deliver a perfectly cooked meal.

Figure 2. Dual dispensing packaging allows the consumer to "dial in" their preferred ratio of product—in this example, hot sauce. The Dialpack cartridge technology allows two components to be delivered and mixed at source in varying ratios.

Figure 3. Thermochromic labels add convenience as in this plastic container of pancake syrup. The label indicates the correct temperature via the word "HOT" following microwave heating.

IMPROVING OPENABILITY CONVENIENCE

Frustration can occur when packaging is difficult to open and can lead to consumers suffering injury as they resort to the use of knives and other sharp implements. Hard-to-open packaging discriminates against the weak and is a real barrier to consumer choice, negatively affecting repeat purchasing.

The American publication *Consumer Reports* looks annually at the most difficult to open packages and awards the dubious honor of "Oyster Awards" for the worse culprits, generally won each year by the ubiquitous welded hard-plastic clamshell packaging for consumer goods. In the UK, the consumer magazine *Health Which?* asked 1000 readers if they had experienced any problems with food and drink packaging (6). Of the 235 respondents, the noteworthy finding was that 45% reported avoiding particular types of packaging because they found them difficult or impossible to open.

Designing easier-to-open packaging is generally not rocket science and frequently is one of good design which adds little, if any, to the package costs. What is needed is an underlying packaging "design-for-all" philosophy where changes are made to the designs of consumer products so that the greatest number of members of society can use them. A focus on better design (size, shape, etc.), along with the optimum use of materials, can produce easy-opened packages consistent with the opening strength capabilities of an aging population. These small design changes, made with consumer openability in mind, fit into the broad definition category of smarter packaging.

An example is the packaging industry's recent introduction of a new range of easy to drink from closures for beverage and water bottles, carried by athletes and cyclists. With one hand, a sportsperson can open these tops by pulling them with his/her teeth, squeeze a shot of drink into their mouths, and close the bottle again by pushing the tops against the chin. There has been a significant adoption of this type of drink container by the elderly and disabled because of this mode of operation. This example illustrates the wider opportunities that are available for introducing minor design changes to provide significant

Figure 4. Smart appliance meets smart packaging, resulting in the convenience of a perfectly prepared ready meal. The consumer uses the microwave to scan the smart code on the packaging, and the Samsung smart oven does the rest.

gains for consumers, in the application of the "design-for-all principle."

Simple designs tend to be the best, and the packaging for Nestlé Maggi bouillon cubes is a good example of easy openability design at zero on-cost. The flat cardboard pack is perforated across one of the flat sides and down the corresponding two edges. A sharp tap along the back of this line hinges open the pack, allowing individual cubes to be easily removed and allowing the pack to be reclosed (Figure 5).

The message is that small design changes can make large differences to openability, resulting in far more senior-friendly packaging that all consumers benefit from. Rigid containers are sometimes difficult to grip and nearly all package closures are round, so they are difficult to grip without resorting to the variety of opening aids presently available on the market. Some packages have "non-round" tops on products such as paper-whitener so that able-bodied people can get a better grip when the top sticks to its base. The German company Gerresheimer has developed a cap that is designed to improve handling for elderly or infirm users. Viewed from above, the cap looks like a plus sign with arms reaching out from the center of the cap. This design greatly reduces the force required to open the container. Bottles can also be stood cap side down, allowing the user to more effectively empty viscous materials.

Squeezeopen™ (7) is an innovative design solution to many of the problems of openability. The closure consists of a lid that is a press snap fit onto a base that serves as the container and opening is performed by simply gently squeezing the lid's sides and releasing the pressure. A multipurpose inner symmetrical ramp system guides and joins the components together (creating an effective seal) when the lid is pressed onto the base and helps to force the components apart when the lid sides are compressed.

The metal can has made great strides in openability with ring-pull easy-open ends appearing on more and more products. Simple design changes, such as increasing the clearance between end and tab to allow easier finger access as in Crown's EasyLift™ end, contribute to improving the convenience for consumers. Metal closures on vacuum-packaged products in glass jars, however, remain an openability obstacle to many consumers, but technology is available to solve even this problem, developed by Metalgrafica Rojek SA based in Sao Paulo, Brazil. The innovative Rojek closure fits both cans and glass jars and has a peelable elastomer seal over a small aperture in the top of the closure. Pulling the seal releases the vacuum and the container can then easily be opened, without the requirement of great manual strength or any opening devices like can openers or knives.

Other developments in smart packaging are looking at the use of smart adhesives to create electrically assisted self-opening structures that are still tamper-proof. Such adhesives have been developed—for example, the electrically debonding epoxy system, ElectRelease™ (8). The incorporation of these smart adhesives in bonded, rather than mechanically seamed, metal ends might offer an easier way of opening via debonding of the adhesive on application of current from a small battery pack.

Stora Enso have recently applied this technology to difficult-to-open blister or clamshell packaging containing items of high value that can easily be stolen. The commercial laminate "CDM Sinuate," is designed to make shoplifting more difficult for small but valuable products such as mobile phones, portable media players, computer supplies, and other consumer electronics. The material provides a strong seal that is difficult to open for a shoplifter but easy to access for a consumer once the package is electrically unlocked at the checkout (Figure 6).

Other convenience-driven smart packaging concepts that improve ease of use are being considered, such as the development of "dial-a-dose" smart caps and closures that allow the safe dispensing of exact controlled quantities of product—for example, pharmaceuticals,

Figure 5. A package can be easy to open through smart design. Tapping this soup bouillon pack on a hard surface breaks the pack in half so it can easily be hinged open to remove a single portion.

Figure 6. Electrical debonding at point of sale of a hard-to-open clamshell package via a hand-held power source. (Reproduced with permission from Stora Enso.)

cleaners, and other potentially hazardous materials. Alternatively, we might envisage a shape memory material acting as a metal rubber band to retain an end or closure that vents or opens automatically with change in temperature—for example, on microwave heating. As always however, there is a fine line between “easy-to-open” and “easy-to-tamper with.”

ADDING NEW FUNCTIONALITY—SELF-HEATING AND SELF-COOLING PACKAGING

Self-Heating—Technologies and Applications

The only viable form of heat engine for self-heating packaging is an exothermic chemical reaction. A number of options are available with varying degrees of heat output, but the most reactive are also the most dangerous, using potentially toxic chemicals and producing undesirable gaseous byproducts. The exothermic chemical reaction of choice for consumer packaging is lime reacted with water because lime is cheap and readily available, and it generates substantial heat output with environmentally acceptable byproducts. An alternative reaction is the hydration of anhydrous calcium chloride, which has the advantage of no reaction byproducts but generates a lower heat output.

Beverages, and particularly coffee, have been the most active application area for self-heating packaging. One of the most successful self-heating containers was launched in test markets in the UK in 2001 as a joint venture between Crown Cork and Seal, Thermotics Development, and Nestlé. The product “Hot When You Want” Nescafé canned coffee heated ~200 mL of hot coffee to around 40°C above ambient in about 3 minutes. More recently, there has been a major launch of self-heating gourmet lattes in the USA, with a range of 10-ounce Wolfgang Puck gourmet lattes being available through Kroger grocery stores in 32 states. Based on the lime/water reaction, the plastic container is portable, fits into a cup holder, and heats the coffee to around 60°C in 6 minutes—and stays hot for 30 minutes.

In many Mediterranean countries, traditionally a small quantity of strong espresso coffee is the beverage of choice, drunk at medium warm temperatures. With these parameters, less energetic exothermic reactions can be used. Caldo Caldo, an Italian development, uses the exothermic reaction between anhydrous calcium chloride and water. A cross section of the package is shown in Figure 7. When the substances are mixed, heat swirls around the aluminium cup and is conducted into the beverage. The consumer shakes the container for 40 seconds before peeling off the lid and a temperature rise of around 23°C is achieved. Hot drink variants are coffee, cappuccino, chocolate, coffee with grappa, and tea with lemon. This beverage is sold across Europe in sports venues, motorway rest areas, and many other outlets.

Self-Heating—Other Products

The increasingly convenience-orientated domestic market requires a means to heat all types of food and beverages,

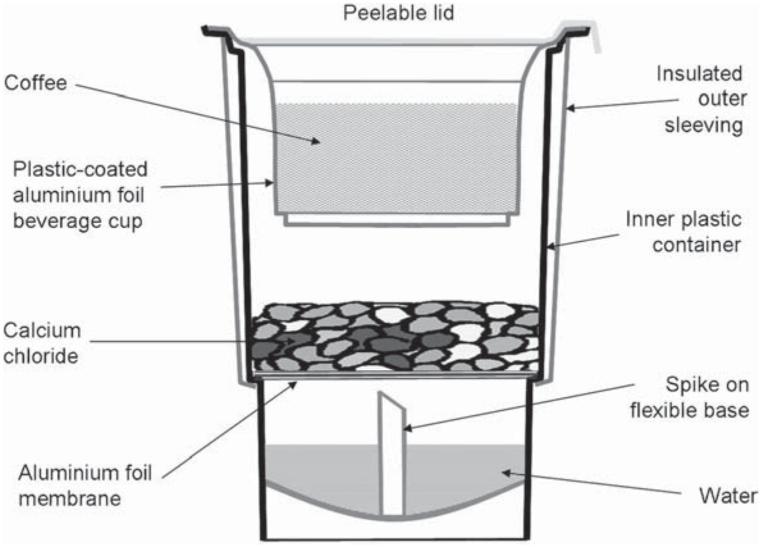

Figure 7. Cross section of “Caldo Caldo” self-heating coffee container. Depressing the flexible plastic base pierces an aluminium foil membrane allowing the water and calcium chloride to mix. When shaken, the resulting exothermic reaction transfers heat via the foil cup to the beverage.

including high-viscosity liquids and solid products—that is, thick soups, snacks including wraps, fajitas, stuffed pita bread, ready meals, pasta, rice and stews. To date, the technologies for self-heating have been confined to lime/water reactions, where heat output is lower but the reaction is safer. But heating times can be long for solid food products since heat is transferred from the heating source to the product solely by conduction.

By ensuring excess water is present with the lime/water reaction, a new heat transfer process is being developed by Thermotic Developments—that of direct steam heating (9). This highly efficient system transfers heat to the product by injecting steam directly into and through the food. Steam is a very effective medium for transferring energy, with 1 g of steam providing 2.2 kJ of energy.

Spin-off technology from the military MRE programs using highly reactive exothermic reactions based on magnesium oxidation or the reaction between potassium permanganate and glycerine provides rapid heating even for solid food meals. This has created a niche but growing market for self-heating food products for emergency services and the outdoors sector.

A number of non-food commercial products are available that use the lime/water reaction for heating. SC Johnson's Raid® Fumigator is designed to fumigate a room or dwelling area. It consists of a metal can containing insecticide in pellet form in an upper cup and lime below in a separate container. Supplied with the can is a separate plastic container that is part-filled with water and into which the can is placed, activating the reaction. The room is then evacuated and the heat generated evaporates the insecticide through a filter in the top of the can. A self-heating cleansing body wipe, Redi+Wash, for use in hospitals and by consumers looking for hygiene on the move, such as campers, travelers, and government field officers has been developed by U.S.-based Donovan Industries. After activation, the wipes in packets of five or eight heat up in 1–2 minutes and then keep warm for a further 20–30 minutes.

Self-Cooling—Technologies and Applications

Self-cooling is technically more challenging than self-heating, and current developments are focused on the two most cost-effective and safe technologies: endothermic chemical reactions and heat pump technology using water vapor as the heat transfer fluid.

Endothermic chemical reactions tend to be weak, producing cool but not cold products. The sister product of Caldo Caldo, Freddo Freddo, is a commercial coffee beverage product that employs the endothermic reaction between sodium thiosulfate pentahydrate and water.

By contrast, water evaporation can be a powerful cooling process, as stepping out of the shower on a cold day demonstrates. The evaporation of 10 mL of water can theoretically cool 330 mL of water by 18°C. Heat pump technology has not yet become commercial for single-serve containers, with high cost and lack of reliability appearing to be the key factors. But the technology is finding commercial success in party keg sizes of beer. The German CS-Metallbau Company has developed the world's first self-chilling refillable stainless steel keg using zeolite heat pump technology. The technology is licensed to Cool-System Bev. GmbH (10); and it is being used by Germany's Tucher Bräu brewery, as well as other breweries throughout Europe, Asia, and the United States, for take home-beer in 5- to 20-L sizes.

Self-Heating and Self-Cooling Smart Packaging—Future Outlook

For self-heating packaging, technical developments are expected to continue with the focus being on lime/water and calcium chloride/water chemical reactions with the provision of a temperature control feedback system so the devices create a maximum temperature for the drink regardless of the ambient temperature. Thermochromic temperature labels will be incorporated to indicate when a product is hot. Costs will come down and product quality will go up, so the future is promising, particularly for direct steam heating.

If individual self-cooling beverage cans are to become commonplace, this will likely require the development of cost-effective miniaturized "drop-in" modules using heat pump technology where the heat produced inside the beverage container can be absorbed by phase change materials, as in the concept sketch of Figure 8.

MORE EFFECTIVE USE OF PRODUCTS

Food waste is a major problem for the developed world and one that smart packaging can help reduce. Food

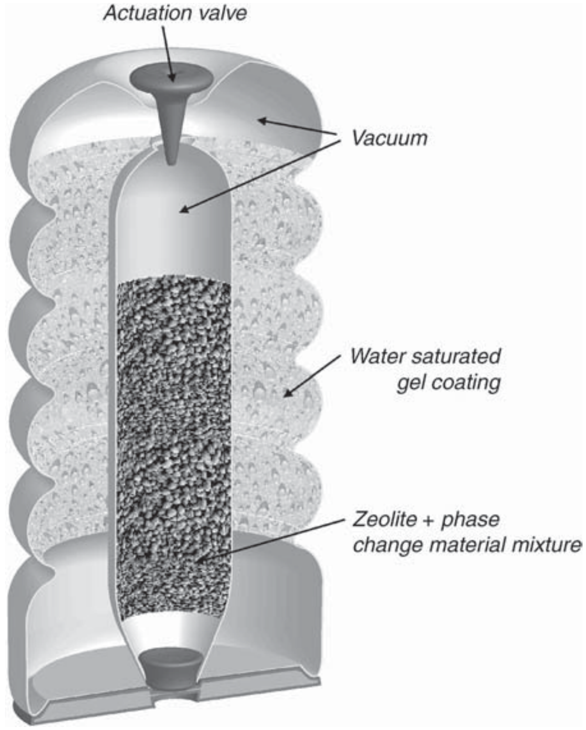

Figure 8. Self-cooling packaging in the future might utilize drop-in modules that rely on water evaporation/heat pump technology for their cooling effect.

degradation kinetics are overwhelmingly determined by the storage temperature, not by the storage time. Since the majority of perishable packed food has a "best before" or "use-by" date, indicating storage time and not temperature, the result is that much perfectly edible and safe-to-eat food is thrown away by consumers because it has reached its printed "use-by" date, regardless of actual condition.

Accurate shelf-life data can be provided to the consumer by smarter food packaging having color change labels that integrate the passage of time and the various storage temperature excursions, changing color when a composite sum of exposure has been reached. Up to now, with one exception, these time-temperature indicators (TTIs) have met with significant retailer resistance but are now close to wider commercialization according to many developers: Vitsab in Sweden, Avery Dennison in the USA, OnVu in Europe, Cryolog in France, and TEMPTIME in France and the USA.

The most successful and longest-running application is for the Fresh-Check® label from TEMPTIME, which has been in use for at least 15 years by the French supermarket Monoprix, and now can be found on more than 400 different products. An example on a minced beef patty is shown in Figure 9. When the central bull's eye of the "Puce Fraîcheur" label turns darker than the outer layer, the product is no longer safe to eat. Details of TTIs and other freshness color change indicators for foods such as fish, seafood, and poultry are discussed and reviewed in reference 1.

Figure 9. The French supermarket group Monoprix has used time–temperature indicator (TTI) labels on perishable foods in their stores for more than 15 years.

Some smart packaging developments have taken inspiration from Nature, where there are many color-change chemical reactions at work associated with food degradation and ripening that can be borrowed and applied to consumer packaging. As an example, the ripening of many fruit is accompanied by the emission of ethylene gas—easily detected by animals but not by humans, who therefore have real difficulty in deciding whether certain types of fruit are ripe in the absence of a color change. So ripe bananas are easy to spot, but fruit like winter pears, avocados, and melons are not.

Using a color change label that is responsive chemically to ethylene inside the pack creates a smart package that informs the consumer when pears are ready to eat and at a certain level of ripeness (Figure 10). Since fruit and vegetables are a major source of post-consumer food waste (11), this innovation ought not only to help consumers enjoy fruit more but also reduce the tendency for consumers to throw away unripe or overripe fruit.

The drive to use smarter packaging to reduce environmental impact by ensuring a more complete utilization of food products by consumers has been extended to "hard-to-get-out" packaging. High-shouldered containers and packaging with sharp internal angles are typically difficult to empty completely, and the last 5–10% of product is generally discarded with the packaging as consumers "give up" on getting the last of the product out. Packaging containing viscous food products is also difficult to empty completely, and this has triggered the development of non-stick superhydrophobic internal surfaces based on the "Lotus Effect" (12), which allow containers to be more completely evacuated (Figure 11).

Figure 10. A pack of four Concorde pears with active ripeness indicator. The label inside the pack changes color from dark red to yellow as the pears ripen.

Figure 11. Smarter packaging can contribute to reducing post-consumer food waste—in this example by ensuring less residual food is left in the package when it is empty.

Figure 12. Smart packaging in aerosol form. Improved insecticide performance and less environmental impact results from packaging that electrostatically charges the insecticide particles.

Metal aerosol cans are smart packaging innovation leaders in the household and cleaning market. The Mortein "SmartSeeker™" insecticide aerosol can provides improved effectiveness over conventional aerosol spray cans since the spray is electrostatically charged through a specially engineered nozzle each time the insecticide is used, improving insect "kill" by electrostatic attraction (Figure 12). Not only is the product more effective and lasts longer, but the packaging contributes to reducing the environmental impact associated with insecticide use within the home.

PROVIDING CLEARER, MORE EFFECTIVE COMMUNICATION

Smart packaging offers the opportunity to dramatically improve the communication aspects of the human/packaging interface. For brands this offers the opportunity to strengthen the emotion connection with the consumer—via, for example, story-telling related to the provenance or history and traditions of the product. But to communicate more effectively, there needs to be a movement away from text-based communication toward the greater use of visual and audio information on packaging. Both at point of sale and during subsequent use and disposal, there are opportunities for packaging to inform about the utility and characteristics of the product, such as

- the product, ingredients, and attributes,
- the way the product works or is best used,
- for pharmaceuticals, when and how to take the product.

It is expected that these communication packaging innovations will be strongly driven by advances in technologies such as nanotechnology, biomimetics (learning from Nature), electroluminescent, and other display technologies and printed electronics.

Advances in package communication that provide sound and vision is possible using conventional silicon device circuitry with LED or electroluminescent (EL) illumination and sound chip technology driven by button cell battery power. This exists today but is going to add a dollar or two to the cost of a package, depending on complexity, putting it out of bounds for all but high value products. As an example, sound and EL label illumination effects, stressing the history and tradition of rum making in Barbados, can be found on the bottle of the 10-year old Barbadian rum *Coyopa*, which retails for around $50.

But real communication opportunities need not wait for the commercialization of cost-effective printed electronics on packaging, although these will come. Advances in nonelectronic technologies such as color-change chemistry, lenticular graphics, and data matrix bar codes can today offer a conduit to better story-telling about a brand product's attributes, provenance, and how the product can be used or can provide useful product information in an easily understandable communication format for the consumer.

As already discussed, the current ubiquitous printed date coding system on perishable food is fatally flawed and there is currently a move toward more accurate time-temperature colour change labeling. Eventually color-change chemistry will give way to low-cost printed electronics on labels, leading to electronic self-adjusting "use-by" dates and displays providing the important technical breakthrough for smart packaging, leading to a dramatically improved user interface with food packaging of the future (13).

Simple communication about the benefits of using a product can be visually and effectively represented through lenticular graphics. As an example, the no-spill medication for children sold across the United States under the ElixSure brand features a lenticular label on the outer paperboard carton that shows two images of spoons that flip back and forth, signaling "spill-proof" to the consumer (Figure 13).

Combining lenticular graphics with conventional silicon sound chip technology can augment printed instructions and improve communication effectiveness about product use in a powerful way. "Smokey Eye—the Talking Palette" eye makeup from Stila Cosmetics (Figure 14) comes in a kit that not only visually shows the eye before and after application by means of a lenticular graphic but also instructs consumers in a step-by-step audio process at the press of a button.

Compliance packaging for pharmaceuticals is an active development area for electronic smart packaging, and several devices are commercial and have recently been discussed (14). As an example, the Med-ic™ Smart Package uses an onboard CPU embedded in a blister package to record each time a pill or capsule is removed. The RFID tag records the time for later analysis, such as at repeat prescription time or on a follow-up visit to a health center, when the information can be downloaded through a 13.56-MHz RF wireless reader and displayed graphically. When used for clinical trials, at the end of the trial period the patient returns the blister package and the information is downloaded to a database (Figure 15). A second variant is a smart medication bottle termed eCAP™. It reminds the patient when the next dose is due and records the time the patient opens the bottle to remove the tablet or capsule, without active patient input.

CLOSING REMARKS

Smart packaging need not use new technologies or be complex to offer real customer benefits and improved levels of convenience in today's crowded marketplace—considerable scope exists for using today's technologies in more imaginative ways. The more extensive use of

Figure 13. Increased ease-of-use and accuracy of dosing is provided by this spill-resistant medicine for children. The outer packaging communicates the non-spill characteristics of the formulation by lenticular graphics.

Figure 14. Electronic smart packaging plus lenticular graphics provides full sound and visual instructions to consumers with this cosmetic eye make-up palette.

lenticular graphics and data matrix bar codes are just two possibilities. But it is expected that new technologies, many becoming available for the first time in the next few years such as nanotechnology, printed electronic displays, and batteries, will hugely boost the capabilities of smart packaging.

For some market sectors, such as pharmaceuticals and healthcare, smart packaging will be as much about improving the human interface as about providing new functionality. The growing demands for information about the product will force an abandonment of printed text on packaging as the principal means of communication. Packaging will be capable of sensing, speaking, and displaying, and hence of warning the consumer of, for example, problem ingredients. No longer will seniors struggle to open pharmaceutical packaging or forget to take their medication. All age groups will benefit from these future packaging advances, many of which will be electronic in nature.

Consumer benefits will ultimately drive smart packaging developments and must be clearly communicated to

Figure 15. Electronic smart packaging from Information Mediary helps and assists patients to be compliant in their pharmaceutical regimes. [Reproduced with permission from Information Mediary Corp (IMC).]

the consumer. On-the-go as a way of life seems to show no signs of abating and in all likelihood consumers will become even more mobile and time pressured. In this brave new world, untapped opportunities exist for smart packaging to offer new and improved levels of benefits and convenience.

Cost-effective smart materials and systems development will perhaps one day realize the truly interactive package that greets the consumer at supermarket aisles, plays music, or even flashes the brand logo of the product in bright lights as an inducement to purchase. Once purchased and back in the home, the labelling and communication devices on the package will additionally provide an interaction with smart inventory systems, smart storage/disposal and smart cooking equipment in the kitchen—as is happening already, for example, with microwaveable convenience meals.

Smart packaging can be considered as a natural progression in package innovation for many fast moving consumer goods (FMCGs). After all, competition for shelf space has never been more intense, and the competition arena is increasingly moving from media to the point-of-purchase making packaging more important than ever before.

BIBLIOGRAPHY

1. J. Kerry and P. Butler, eds., *Smart Packaging Technologies for Fast Moving Consumer Goods*, John Wiley & Sons, Chichester, UK, 2008.
2. P. Butler, *Consumer Smart Packaging*, IDTechEx, Cambridge, 2005.
3. Productscan® data. Web information available at http://www.productscan.com/news/news_mouse04.pdf. Accessed May 7, 2008.
4. Wikipedia definition. Web information available at http://en.wikipedia.org/wiki/Wrap_rage. Accessed May 7, 2008.
5. BBC news report. Web information available at http://news.bbc.co.uk/2/hi/business/3456645.stm. Accessed May 7, 2008.
6. "Packaging It Can Drive You Nuts—The Most Infuriating Food and Drink Packaging, as Voted by Readers," *Health Which?*, 18–21 (October 2000).
7. Squeezeopen™. Web information available at http://www.squeezeopen.com. Accessed May 7, 2008.
8. ElectRelease™. Web information available at http://www.eiclabs.com. Accessed May 7, 2008.
9. Steam To Go. Web information available at http://www.steamtogo.com. Accessed May 7, 2008.
10. CoolKeg. Web information available at http://www.coolsystem.de. Accessed May 7, 2008.
11. WRAP Research Report, April 2008. Web information available at http://www.wrap.org.uk/retail/index.html. Accessed May 7, 2008.
12. Wikipedia definition. Web information available at http://en.wikipedia.org/wiki/Lotus_effect. Accessed May 7, 2008.
13. Packaging Materials & Technologies Ltd. Web information available at http://www.smartpackaging.co.uk/UseByDatingArticle.pdf. Accessed May 7, 2008.
14. Reference 2, pp. 148–151.

SMART PACKAGING TECHNOLOGIES FOR BEVERAGE PRODUCTS

Joseph P. Kerry
Department of Food and
Nutritional Sciences, University
College Cork, Ireland

INTRODUCTION

The beverage industry constitutes one of largest sectors within the global consumer packaging market and has been at the forefront in pioneering the development of novel packaging concepts or through the adoption of new technologies as they relate to innovative packaging solutions. Today, some of the leading global product brands in consumer goods are beverages. Beverages are now no longer seen as merely thirst-quenching products but as vehicles for delivering functional nutrition that promotes health and well-being through the incorporation of "wellness" components such as vitamins, minerals, phytochemical extracts, pre- and pro-biotics, and so on, into beverages. Water-based, milk-based, and juice-based beverages, which continue to grow in popularity, are seen as natural and ideal carriers of such components. Equally, the development of beverage product lines where flavor, among other organoleptic properties, need to be created or controlled is another key area in beverage product development. In the future, nanotechnology promises to yield new solutions to key challenges for the beverage industry, just as it is likely to impact the food industry. Research and development currently underway to improve the beverage product itself includes the development of functional beverages, in-pack nutrient delivery systems, and methods for optimizing beverage appearance, such as color, flavor, and consistency (1). Additionally, nanotechnology will also be used to affect the beverage pack as well—For example, by enhancing barrier properties, lightweighting plastic bottles but improving mechanical strengths and heat resistances, providing mechanisms to help packaging to degrade or biodegrade in the environment, and producing packaging materials that have an enhanced and associated hygiene status (2).

The use of smart packaging as a novel marketing tool is another means by which this technology can be effectively harnessed. For example, the development and use of fragrances as packaging components in an attempt to attract the consumers' attention to high-value food and beverage products is one such approach (3). Additionally, as consumers are confronted by a barrage of ever increasing advertising mechanisms, the consequence is that the traditional use of television, radio, and print advertising as a means of commercializing products is losing effectiveness; consequently, novel marketing techniques are developing to explore new advertising mechanisms in an attempt to get brand and product noticed. One such approach appears to be targeting as many of the five senses as possible, all of which are delivered directly through the product packaging (4). Issues pertaining to tradition, luxury, and high-end beverage products such as reinforcement of consumer appeal, tamper evidence, counterfeiting, and brand protection are also highly topical areas of interest within the beverage industry.

Many of the issues described above are being addressed through the use of smart packaging technologies, and these are discussed subsequently and in greater detail.

GAS-RELEASE PACKAGING

One of the most common and widely adopted forms of innovative packaging is the gas-releasing "widget" developed originally for canned and bottled beer products, one of the best known being Guinness stout (Figure 1). This technology was developed to provide a draught beer for the consumer, so that pub-quality beer (having more body, more effervescence, and a thicker and creamier head) could be experienced by the consumer in the comfort of their own home. The widget functions by releasing CO_2 from some of the beer in order to create the head. The widget that is used in canned beer consists of a hollow nitrogen-gas-containing plastic sphere which is 3 cm in diameter and has a tiny hole in it, while that used in bottled product is cylindrical in shape and approximately 7 cm long with winged appendages to prevent the widget from exiting through the neck of the bottle. In the case of

Figure 1. Bottled draught Guiness containing widget technology.

canned product, the widget sphere is added to the can before the can is sealed, where it floats on the surface of the beer with the hole just slightly below the surface (5). Prior to sealing the can, a small shot of liquid nitrogen is added to the beer; this evaporates during the rest of the canning process and pressurizes the can. As pressure increases in the can, beer is slowly forced into the sphere through the hole, compressing the nitrogen inside the sphere. When the can is opened, the pressure inside the can immediately drops and the compressed gas inside the sphere forces beer out through the tiny hole into the additional surrounding beer. This agitation causes a chain reaction of bubble formation throughout the beer; the CO_2 that is dissolved in the beer forms tiny bubbles that rise to the surface which form the head. The presence of dissolved nitrogen allows for smaller bubbles to be formed, which consequently produces the creaminess associated with the head of the product (5). This result can be explained because the smaller bubbles in the product need a higher internal pressure to balance the greater surface tension which is inversely proportional to the radius of the bubbles. Achieving this higher pressure is not possible by merely using dissolved carbon dioxide because the much greater solubility of this gas compared to nitrogen would create an unacceptably large head. The result, when the can is then poured out, is a surging mixture in the glass of very small gas bubbles and liquid, just as is the case with certain types of draught beer. Not only does the nitrogen make the beer creamier and produce a better head, it also protects against oxidation. Consequently, the brewer can permit the beer to be less carbonated (5). The "canned draught" products have levels of carbonation similar to those in cask-conditioned ales, and they have less than half those in some bottled beers.

Apart from Guinness, other breweries have since come up with their own widget designs, which were introduced to draught beer in 1992, lager in 1994, and cider in 1997. In 2002, the Kenco Ice Cappio coffee drink from Kraft Foods, which contained a widget, was launched in the United Kingdom. When the can was opened, the widget produced a creamy head of froth on the beverage (6). As has been shown, this technology has proven itself but yet has enormous potential because it also lends itself to application in other segments such as mixed milk drinks and milk shakes, yogurt drinks, fruit juice-based drinks and smoothies, and coffees. For Kenco Ice Cappio, Ball Packaging Europe also inserted plastic capsules in 0.25-L cans. A relatively new cappuccino cocktail is focused on the Ball Packaging Europe can: "Cafe Kiss," which is a cappuccino drink containing vodka, was launched on the UK market in a 200-mL Slimline can in 2006. A capsule-style widget inside the can ensures that the typical cappuccino froth head is produced when the can is opened. The coffee cocktail can be primarily sourced from British retail chains Tesco and Spar (7).

Future developments of the widget may incorporate elements of nanotechnology; for example, the external surface of the widget could be expected to provide a site for nucleation, or a liquid or active agent could be encapsulated within the widget. The widget could also offer prolonged bubble release and create other "theater effects" during opening and consumption (2).

FLAVOR RELEASE PACKAGING

Other smart packaging devices may be used to release flavors and aromas into beverage products at the point of consumption so as to create or maintain product intensity and quality. Companies have already incorporated scents directly into plastic-based containers so that consumers can smell, for example, the aroma of freshly ground coffee without opening the product. Newly developed scented ink, meanwhile, is allowing ads and catalogues to capture a consumer's attention with an unsuspecting whiff, using a technology beyond your father's scratch-'n-sniff (4). Fragrances and deodorants for plastics are used in a variety of applications and are playing a growing role in marketing food and beverage packaging and in consumer products for the home (3). Olfactory scientists say that using scent is smart marketing. Of all the human senses, smell has the most direct pathway to the emotional center of the brain (4).

The incorporation of aromas into the polymer material can be used to attract consumers when the package is opened, and also to balance any detrimental effects of aroma loss (8). AddMaster recently developed a chocolate fragrance for use in polyethylene packaging of chocolate-flavored milk-based drinks that is intended to create an "in-store awareness" of the product (3). Also, a new aroma and flavor-releasing technology for packaging is being tested in consumer trials in bottled water and nutritional food packaging applications in the United States (9). A U.S. company, ScentSational Technologies, is behind the product, which is also known as ScentSational (Figure 2).

This patented flavor and brand-enhancing packaging incorporates aromatic qualities directly into closures (10). Pasteurization generally burns off what is known as top notes, or the aroma notes in beverages traditionally associated with freshness (10). Additionally, aromas strongly associated with certain packaged foods and beverages are not statically stable; consequently, they become altered chemically over time, resulting in the generation of different and sometimes undesirable odors. The aromas that ScentSational uses remain stable because the molecules are, essentially, encased in plastic (4). ScentSational essentially replaces the top notes lost from products during processing, handling, and storage through the insertion of food grade flavors that are FDA-approved and generally recognized as safe (GRAS). These flavors are mixed with polymers during the injection molding of closures or during the manufacture of plastic-based liners and seals for metal closures (10). The plastic used gradually emits volatiles that are responsible for the specific aromas produced. It has been reported that these aromas persist for approximately a month and actively scent whatever food or liquid product is in close proximity to the packaging material (4).

ScentSational's technology is based on the premise that foods and beverages contained in packaging that smells better will taste better. The technology works using the

Figure 2. Aroma Water, LLC, licenses the technology from ScentSational Technologies to produce Aroma Water™. The cap emits an aroma (lemon-lime or mandarin orange scent) that tricks the taste buds into believing the water is flavored.

science of taste. With the exception of sweet, sour, bitter, salt, and Umami, all other taste is a result of the sense of smell. When someone drinks a beverage, the liquid creates vapors inside the mouth that travel up the retro-nasal canal where it eventually hits the olfactory bulb. It is here that these flavor vapors are interpreted as taste by the brain (10).

NutriSystem, a leading marketer of weight management products, recommends that users of its products drink at last eight 8-ounce glasses of water daily to help flush out toxins produced when body chemistry changes as weight is lost (11). To make the challenge a little easier, the company sells a water bottle fitted with a closure infused with another product also produced by ScentSational Technologies called CompelAroma®. This product encapsulates substances within the structure of a plastic package that emits an aroma during heating and after opening. This gives the water contained in the bottle a specific taste, even though no flavorants have been added to the product (11).

A Pensylvania-based beverage firm, Aroma Water, LLC, licenses the technology from ScentSational Technologies to produce Aroma Water™ in either a lemon–lime or mandarin orange scent. Both "flavors" are approved by the Food and Drug Administration (Figure 2). The aroma of a particular flavor can affect the sense of taste. For NutriSystem, CompelAroma® is added to the closure of the water bottle as it is injection molded. The closure emits an aroma (currently lemon, peach, or berry) that in effect deceives the taste buds into believing that the water is flavored, enhancing the consumer's enjoyment of water without adding calories, sweeteners, or preservatives (11).

A recent innovation to make milk more popular with children has been developed by Unistraw Intl. Pty. Ltd., Australia. This company has been engaged for the last seven years in perfecting a milk-flavoring solution that is mess-free, convenient, wholesome, and tasty (12). The patented Unistraw™ system enables flavor "beads" to be dissolved in a beverage as the liquid passes through the straw. The system has three elements; a straw, filters, and flavor beads. The system's first component, the straw, is made from transparent polypropylene (PP), mixed with a food-grade plasticizer/toughener that prevents the straw from cracking or splitting. The straw measures approximately 0.26 in. diameter and is 7.08 in. long. Filters are heat-welded into both ends of the straw and use a patented cone shape that allows an optimal flow of liquid through the straw while keeping the company's UniBeads inside (Figure 3). Each straw holds approximately 4 g of UniBeads, which are 0.08-in.-diameter round beads that can be dissolved into a beverage to add flavor, vitamins, or other ingredients. The UniBeads are manufactured at Unstraw's facility in New South Wales, using processes and equipment developed by the company (12). In Australia, the straw is sold under the brand name "Sipahh™." These milk-flavoring straws were designed for the 5- to 15-year-old target market. The original launch flavors of Chocolate, Banana, Caramel, and Strawberry have already been joined by Toffee Apple, Cookies & Cream, and Choc-Mint. Other applications envisioned for the Unistraw™ system include the delivery of vitamins and other nutrients, nutraceuticals, and bioactive ingredients or pharmaceuticals into beverages (12). Sipahh™ fits perfectly into the global trend toward healthier and convenient products that deliver nutritional benefits in a fun and novel way (13).

Choice-enabled packaging (patent pending) is now being marketed by IPIFINI Inc., a Boston-based

Figure 3. Defense$^{(\text{TM})}$ citrus flavored vitamin and mineral supplement beverage line from New York-based Brain Twist, Inc. which is formulated to promote consumer "wellness."

innovative consumer technology company that provides a unique approach for flavor and aroma additions into liquid-based products. Ipifini's technology allows consumers the opportunity to personalize their products at the point of use, as well as delivering products that are susceptible to degradation when blended with other product materials or stored in bulk containers. Depression of a button on the side of the pack that contains the additive allows the flavor to be wholly released into the product. Previous innovations have suffered from being susceptible to tampering on the supermarket shelf, but this range of products has a method for overcoming this problem (14). This flavoring technology works with carbonated drinks, but only when the pressure is released by opening the closure. Alternatively, the buttons can be camouflaged as part of the packaging design. Some advantages of these products could be the provision of multiple flavor choices for the consumer and the possibility of creating multiple flavor combinations in beverage products, not dissimilar to what has already been achieved by Jelly Belly for jelly beans.

NUTRIENT-RELEASE PACKAGING

As well as adding flavors directly to beverages, products have been developed that add a segregated nutrient that otherwise cannot be preserved in liquid solutions. In effect they are added just prior to consumption. The Ball packaging group has developed "FreshCan®," which is geared toward the health, wellness, and sports drink markets. Developed jointly by Ball Packaging Europe (BPE) and Degussa FreshTech Beverages LLC. FreshCan® Wedge technology is a patented delivery system that enables dry sensitive ingredients, such as vitamins, to be dispensed into a canned beverage only when the can is opened (12). With FreshCan®, sensitive substances such as vitamins, pro-biotic additives, or trace elements can be stored in a can in a dry state and remain unmixed with the beverage until the can is opened (15). This technology is a patented beverage can that was specifically developed to contain an air- and water-tight plastic container called a "wedge." When opened, pressure decreases in the can, causing the wedge end to spring open. Consequently, sensitive substances are not dissolved in the beverage until it is destined to be consumed. Additionally, nutritional additives that the consumer could previously only take in powder or tablet form can now also be sold as a drink, making it a more convenient form of ingestion for specific consumer categories, like the sport and fitness sector for example (15).

The first commercial application of the wedge became available with the launch of the new Defense$^{(\text{TM})}$ vitamin and mineral supplement beverage line from New York-based Brain Twist, Inc. Offered in orange and lemon–lime flavors, Defense combines zinc, pectin, calcium, and vitamins C, and A, B2, and E in a beverage formulated to combat germs that cause common colds and flu (Figure 3). Defense is packaged in a traditional, two-piece aluminum can holding 14.5 oz of the beverage. Inside resides the FreshCan® Wedge, a two-compartment, polypropylene device containing 10 mL of dry ingredient cylindrical in shape and having a total volume of 25 mL.

Other commercial applications of the wedge-style applicator exist. Atlantic Multipower Germany, Europe's leading supplier in the sports food sector, is introducing a ready-to-drink creatine product in Germany, United Kingdom, and Austria. With wedge support, the creatine is freshly mixed with the drink when the can is opened. The Swiss company Emmi is using this packaging device to overcome stability issues with a nutrient known as CoQ10. Its "LactoTab" performance drink, based on milk serum, has CoQ10, vitamins, and minerals contained within a tablet sealed in the lid of the bottle (16). Further specific details relating to these products have been reviewed by O'Sullivan and Kerry (17).

Alternative technologies to the wedge applicator exist. A company called Portola has introduced the Fusion cap, which again facilitates the product user to add a flavor or vitamin to a bottled beverage by simply twisting the cap. This two-piece, resealable cap is designed to keep a flavor or vitamin powder, tablet, or liquid separate from the beverage until the consumer is ready to drink it (18). Similarly, the New Zealand-based company Alto has designed the Technology cap, which was commercialized by Rio beverages for its IKon energy drink, and has also developed the Freshmix cap, which contains the feature of a fizzing tablet dispenser. This feature allows the active ingredient to remain fresh and inactive within an aluminum foil compartment in the closure until the point of consumption, when the tablet is released into the beverage to provide a fresh and fizzy drink on demand.

PRO-BIOTIC RELEASE PACKAGING

Orchard Maid is the first drinkable yogurt to be equipped with the pro-biotic Life Top Straw™ (19). This product first appeared in the United Kingdom and was developed by BioGaia and marketed by Tetra Pak, both located in Skåne, Sweden. Orchard Maid fruit yogurt drinks are packaged in regular single-serve cartons with straws (20). The pro-biotic bacteria are only released when the liquid portion of the product passes through the straw at the point of consumption, thereby ensuring bacterial viability and effective dosage. These pro-biotic straws, containing the lactic acid bacterium *Lactobacillus Reuteri* (Reuteri™), which has been reported to reduce gastrointestinal disorders and enhance the immune system, can be attached to the outside of the primary packaging (19). Aseptically processed and packaged, the drinkable yogurts have an ambient shelf-life of 12 months. Additionally, the product provides further convenience for manufacturers in that it facilitates the continued usage of existing packaging materials and formats. Using this approach, pro-biotics can be added to virtually any beverage, without compromising on ingredient usage or taste. The straw eliminates production concerns relating specifically to accurate product blending, controlled dosage, and heat damage (19).

ENZYME-RELEASE PACKAGING

Several categories of antimicrobials have been tested for antimicrobial packaging applications: organic acids, fungicides, bacteriocins, proteins, inorganic gases, species, silver substitute zeolite, and enzymes (21–23). One form of active packaging utilizes the incorporation of enzymes to facilitate in-package processing (24). Active packaging technologies that employ bioactive compounds such as enzymes and peptides typically immobilize the moiety via entrapment or physical adsorption. However, there are advantages to covalently attaching the compound to the packaging film. From a regulatory standpoint, if it can be established that a compound is highly unlikely to migrate from the polymer to the food, it may not need to be considered a food additive (25). Researchers at Cornell University have successfully impregnated packaging films with enzymes posessing specific functions. Soares and Hotchkiss (26) displayed that the bitterness associated with certain citrus juices could be significantly reduced using CA (cellulose acetate) films containing immobilized naringinase. These films reduced bitterness by hydrolysis of naringin and sorption of limonin, thereby increasing perceived product sweetness using sensory evaluation panels. In order to be practical, an improvement in enzyme activity per unit area may be required so that a lower film area to product volume ratio can be used. This work also demonstrates that an active packaging system based on immobilization of enzymes to product contact layers of packaging may be feasible. Unlike the current situation where most foods deteriorate in quality during storage, products exposed to package-bound enzymes might improve during storage (27). Appendini and Hotchkiss (28) investigated the efficiency of lysozyme immobilized on different polymers and determined that the combination of cellulose triacetate (CTA) containing lysozyme produced the greatest antimicrobial activities. Goddard et al. (29) also demonstrated that this concept similarly operates in removing lactose from milk. Instead of adding lactase to milk or using an immobilized enzyme reactor that can foul or clog, lactase can be incorporated into the packing container's wall (Figure 4). A British patent assigned to Tetra Pak International AB describes incorporation of lactase into pasteurized or sterilized milk prior to packaging to split the lactose after packaging (24). With sufficient activity, you could reduce the lactose concentration of the milk during shipment (29, 30). Lactose intolerance, or mal-digestion, is the reduced ability to hydrolyze lactose and affects individuals with insufficient lactase activity in the small intestine. It is a dietary problem affecting a minor, but nevertheless substantial, proportion of the population (24). Intolerance results in varying degrees of abdominal cramps, gas production, and nausea (31). Goddard et al. (29) used a yeast-derived β-galactosidase which was covalently attached to a surface-modified polyethylene film to produce sustained enzyme activity over a range of temperature and pH values (29). These data suggest that enzymes that may have applications in foods can be covalently attached to inert polymer surfaces, retain significant activity, and thus have potential as nonmigratory active packaging materials.

Similarly, enzymes that metabolize cholesterol could be used in a manner similar to lactase in order to reduce the cholesterol in a product like milk (30). Brody and Budny (24) suggested a system whereby active packaging combined with PharmaCal Ltd. technology would allow the incorporation of the enzyme, cholesterol reductase, within the primary packaging structure containing the product in question. For example, untreated milk could be packaged; and in the time taken to transport the package to the consumer, it could conceivably become free of cholesterol.

ODOR REMOVAL PACKAGING

Flavor scalping, or permeation of aroma components, may result in loss of flavor and taste intensities and/or change

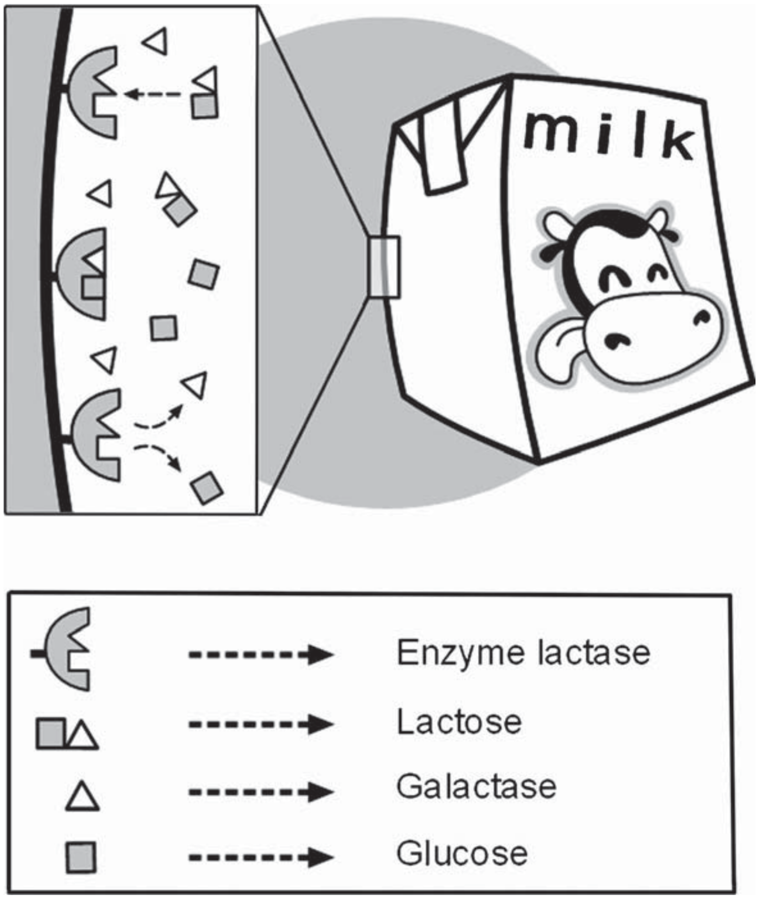

Figure 4. Enzymatically active pack of milk: Lactase enzymes are attached in the inner part of the pack transforming lactose. (Reproduced with permission of Alberto Bertolín Terrádez.)

in the organoleptical profile of a beverage product (32). The development of unpleasant flavors as a consequence of processing can be the result of either (a) thermal degradation of components, such as proteins, or (b) the manufacture of chemical components via Maillard reactions (33). Equally, the oxidation of fats and oils is also accelerated during processing and especially when elevated processing temperatures are required. Apart from these more common and relatively fast chemical reactions, there can also occur the slow generation of chemicals which can result in the creation of unpleasant flavors—for example, when fruit components are disturbed from their structural components in the fruit. The bitter principal, limonin, builds up in orange or grapefruit juice after pasteurization, and it renders juice from some cultivars undrinkable. Chandler and Johnson (34) showed that substantial quantities of limonin could be removed or scavenged through the use of acetylated paper (35). The concept of odor removal using chemical affinity was further developed by Brodie and Visioli (36), who used the reaction of aldehydes with amino polymers.

Odors that result from aldehydes such as hexanal and heptanal, which are formed from the breakdown of peroxides created during the initial stages of auto-oxidation of fats and oils, can be removed from package headspaces by active packaging (37). Synthetic aluminosilicate zeolites, which have a highly porous structure, have been incorporated into packaging materials to adsorb odorless aldehydes (38). Such compounds formed in dairy-based and beer-based beverage products could be removed, resulting in improved sensory quality.

In the case of beer, a number of commercial oxygen scavenging technologies have been developed to be incorporated into PET bottles. The Oxbar system (Constar International, USA) consists of an aromatic polyamide (MXD-6) with reducing properties that can be blended in any proportion. By inclusion of a layer of MXD-6 within two layers of PET and using a cobalt salt as a catalyst, structures suitable for the manufacturing of bottles for beer, wine, or sauces can be designed (39).

Sulfites have also been proposed as active substances for use in plastic gasket liners for bottle closures, as liquid trapped between sheets of flexible packaging material, or as compounds that are directly incorporated into plastic film structures to pack products such as wine or ketchup. Other, more recent developments of integrated systems include oxygen-scavenging labels such as Freshmax (Multisorb Technologies, Inc., USA) and incorporation of O_2 scavengers in closure seal liners for beer and soft drink bottles such as Smartcap (a development of Advanced Oxygen Technologies Inc., USA) or Oxbar™ (Carnaud Metal Box, UK), which is specifically designed to be incorporated into PET bottles. A typical oxygen-scavenging structure used in beer bottles is presented (Figure 5).

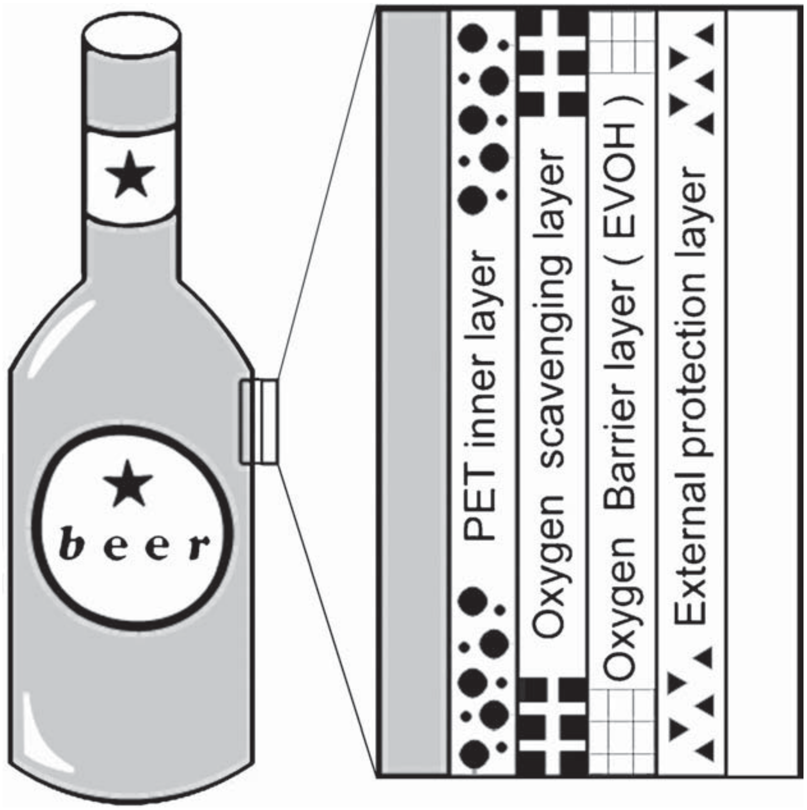

Figure 5. Typical oxygen-scavenging multilayer structure used in PET bottles for beer. (Reproduced with permission of Alberto Bertolín Terrádez).

CONVENIENCE OR USER-FRIENDLY CONSUMER PACKAGING

Consumer smart packaging has the potential to meet future aspirations in improved packaging by placing the packaging user interface and consumer experience at the heart of both product purchase and product utility. This in turn will provide new levels of consumer convenience in areas such as efficient and effective product usage, in storage and disposal, and in bringing new forms of useful functionality to help support consumers in their day-to-day lifestyles (40). While often overlooked in technical reviews and in basic packaging design, the area of consumer smart packaging is pivotal in its capability to directly satisfy consumer needs and requirements associated with a vast array of commodity products, with food and beverages being paramount among them. Several really good examples of consumer smart packaging used for beverage products are in existence today and are found distributed from retail outlets through to vending machines.

Self-heating and self-cooling packaging are two very good examples of consumer convenience smart packaging which have been applied to beverage products. For self-heating packaging to function as required, an exothermic chemical reaction must be employed in order to generate enough heat to warm/heat the product to the consumer's expectation and satisfaction. While there are numerous chemical reactions that can produce heat, relatively few can be used due to safety issues, toxicity issues, and cost impediments relating to practical usage. The exothermic chemical reaction of choice for consumer packaging is lime reacting with water because it generates substantial heat output and is inexpensive and the byproducts of the reaction are environmentally acceptable (40). The exothermic reaction is initiated by the consumer at the desired time of product consumption through some physical action that results in the mixing of the water with the lime at some strategic point in the product container (usually the base). This initiates the exothermic reaction, which is usually maximized through product agitation or shaking, by the end-user, for a certain period of time.

One of the most successful self-heating beverage containers was launched in the United Kingdom, in 2001, in test markets as a joint venture between Crown Cork and Seal, Thermotics Development, and Nestlé. The product "Hot When You Want" Nescafé canned coffee heated about 200 mL of hot coffee, with an occasional shake, to around 40°C above ambient in about three minutes. More recently, there has been a major launch of self-heating gourmet lattes in the United States, with a range of 10-oz Wolfgang Puck gourmet lattes being available through Kroger grocery stores in 32 states (40). Other examples of coffee products sold using self-heating packaging are Caldo Caldo,, Café Caliente, and Rocket Fuel (Figure 6). Additionally, self-heating packaging has been developed for drinking chocolate, and tea and is currently being explored for use with soup.

Self-cooling packaging technology is not as developed as is its self-heating counterpart primarily because of issues to do with cost, safety, environmental concerns, reaction times, and current limitations in technological

Figure 6. Examples of self-heating coffee products.

approaches. The technology choices at present boil down to two endothermic chemical reactions and heat pump technology using water vapor as the heat transfer fluid. Forms of gaseous high-pressure expansion can provide effective and rapid cooling but can quickly be ruled out on environmental and safety grounds (40). Nevertheless, commercial application of self-cooling packaging has been undertaken commercially.

The Italian self-cooling coffee product “Freddo Freddo” employs an endothermic reaction between sodium thiosulfate pentahydrate and water. Another example of an endothermic reaction that has found commercial uptake has been the self-chilling refillable beer keg. This technology, which is based on zeolite heat pump technology, has been developed by the German CS-Metallbau Company, licensed to Cool-System Bev. GmbH and used by Tucher Bräu brewery for 20-L refillable stainless steel kegs to cater for the “take home” market.

Other examples of consumer-friendly smart packaging used by the beverage industry to deliver or enhance consumer satisfaction during product usage can be seen in the development of closure systems. The diversity in closure systems described here also nicely demonstrates the simplicity and complexity that can be associated with smart packaging systems.

A very simple closure that can be described as consumer-friendly smart packaging is the simple embossed aluminum foil cap found on the top of all 500-mL aluminum cans of all Kiss ciders and parries. The foil caps have been specifically provided for hygienic protection of the product; once opened, however, they also form a physical barrier to product tampering.

A more sophisticated form of closure device is that associated with Sheridan’s liqueur by Diageo. Sheridan’s liqueur is a two-component drink where a white vanilla crème liqueur is floated on the surface of a dark coffee-chocolate liqueur, resulting in a drink similar in appearance to an Irish coffee (40). Strategic to meeting consumer satisfaction is the requirement that the correct ratios of white to black liqueurs are dispensed into a glass to provide the desired Irish coffee appearance of white on black. This has been achieved through the development of the Perfect Pour closure system by the consulting group, PA (Figure 7). The closure had to be designed by PA to account for product dispensing, product viscosity, return air flow, and the fitting of the closure unit on two joined bottles, resulting in the perfect pour. The Perfect Pour closure enabled IDV/Diageo to build a brand around the smart packaging closure concept (40).

THERMOCHROMIC LABELING

The technology to make thermochromic inks (change color when exposed to heat) and photochromic inks (change color when exposed to light) has been in existence since the mid- 1970s (41). Thermochromic inks can be printed on labels or containers that are to be heated or cooled prior to consumption to indicate the ideal drinking temperature of the product (37). The use of such technology for beverages first became popular with wine labeling (37). Label color changes, whole or in part, that respond to temperature has been made possible through the development of temperature-sensitive inks formulated by B&H Colour Change Ltd. and Chromatic Technologies, Inc.

Today, this form of labeling is also found on many beer products. For example, commercially available Coors Fine Light Beer has a temperature-sensitive mountain logo (Figure 8) that turns from white to blue when the bottled product is cold enough to imbibe (17).

Similar examples of beer products sold from retail outlets which possess labels incorporating thermochromic-based designs include Wolf beer from the United States and Hite beer from Korea. Depending on their composition, thermochromic inks will change color at specific temperatures; and if appropriate colors are

Figure 7. Example of a smart closure on Sheridan's coffee layered liqueur.

chosen, then hidden messages such as "drink now" or "too hot" become visible (37). A Colour Changing Disposable Lid from Smart Lid Systems™ provides consumers with a visual indicator of product temperature for beverages in paper or polystyrene coffee cups. Infused with a color-changing additive, the Smart Lid™ coffee-cup lid goes from "coffee-bean brown" to glowing red after being placed on a cup containing a hot beverage (12). A further visual indicator ensures that the lid has been placed securely on the cup and serves as a safety feature. When the lid changes color, a dark ring forms around its edge, but only if the lid is attached to the cup properly. The lid is made from virgin high-impact PS, which is mixed in the cold-pellet state with a color-changing additive from Matsui International and which has been approved for food contact by the U.S. FDA. Another aspect being promoted by Smart Lid Systems™ is the lid's potential as a marketing tool, whereby an advertising message can be printed on the lid and would only appear once the lid changes color. For example, text printed in brown ink on the lid or on a

Figure 8. Example of thermochromic ink usage on Coors light beer bottle labels.

clear sticker applied to the lid would only be visible when the lid was in a hot, or red, state (12). Huhtamaki, a Finnish packaging company, uses what it calls “Heat and Reveal” temperature-responsive labels. This approach uses thermochromic technology to reveal a hidden message or strap line incorporated into the cups design. The temperature of the beverage determines when the ink is made visible. Such messages could provide instant win opportunities for vending operators and branders. This technology allows the competition and winning message to be kept secret until the moment a beverage is dispensed. Similarly, the device can also reveal a surprise slogan or message that will only become visible once a drink is poured (42).

SMART BRANDING

The competition for the consumers’ attention on-shelf has never been more intense, and innovative beverage packaging companies are interested in packaging that captures the attention of the consumer (12). Manufacturers are spending more to design packages that blink, beep, yell, and waft scents at shoppers (4). U.K.-based Cognifex Ltd., has developed a miniature electronic unit with an LED and silicon chip and posessing a self-contained button-cell power source that illuminates plastic and glass beverage bottles for marketing and promotional purposes (12). The Cognifex unit is designed to fit on the bottom of a standard-sized beverage bottle and can be triggered in a number of ways. These activation methods could include manual depression of a switch, pulling of a tab, removal of the cap or lid with a special opener, an infrared (IR) signal, magnetic switching, or an external radio-frequency (RF) signal. Once triggered, the LED will illuminate the bottle and its contents for a predetermined period of time. Depending on what the brand owner is trying to achieve with the illumination effect, the device can be designed to function for anywhere from a few minutes to several months. Another possible application envisioned is for sweepstakes or promotional campaigns, where bottles could be illuminated remotely to indicate a winning package, or winning bottles could emit a different color than regular bottles.

As people increasingly ignore commercials and spread their attention across many types of media, traditional television, radio, and print advertising is losing effectiveness, and marketers are looking for new ways to get noticed (4). Under development are computer chips embedded in packaging that can communicate with a shopper’s PDA or cell phone to give additional product information. Miniature sound systems on boxes and bottles will give people spoken tips and ideas. The German electronics giant Siemens AG has developed a flat electronic display that can be applied to boxes like a label, allowing for tiny lights, miniature games, or flashing messages (4).

Finally, in what might be the first instance of naming a wine for its packaging, Don Sebastiani & Sons released Plungerhead in March 2006. The Dry Creek Valley Zinfandel derives its commercial name after the "zork" closure from Australia (www.zork.com.au) composed of a polyethylene cap and plunger that "pops" when opened (42). The closure is favoured not only because it eliminates corking taint, but because it retains a sense of celebration in opening a bottle of wine (42).

ANTI-COUNTERFEIT BEVERAGE PACKAGING

A concern among packagers and their customers worldwide is the growing incidence of counterfeit products making their way into global markets. Experts estimate that in Europe alone, as much as 7% of the branded consumer products market is lost to counterfeit products (43). The amount of fake food and drinks entering the EU grew by 200% in 2004, with the higher quality of counterfeits making detection more difficult (44). Counterfeiters are shifting their attention into mass market goods categories. Packaging is to the forefront in fighting counterfeiting (43). Lipton, Coca Cola, and Nestlé products topped the list of counterfeit food and beverage items seized at EU's borders, the European Commission said when announcing new measures to crack down on the problem (44). In many Western nations, such as the United Kingdom or the United States, the quota of counterfeit products is about 10%. China accounted for most of the total counterfeit goods seized in 2004. The massive increase in counterfeit food and beverage production occurred following the collapse of the Russian economy in 1998. This single event offered food fraud the opportunity to fill empty retail shelves with cheap and counterfeit goods (45). In Russia, products like condensed milk and mineral water are targeted by counterfeiters. In fact, it is estimated that three-quarters of the mineral water sold in Russia is thought to be fake, with counterfeit bottled water accounting for half of the Moscow market (45). Counterfeiting and tampering can undermine consumers trust in the quality and safety of a branded food product, leading to a loss in market share. In response, companies have turned to new forms of smart packaging and labeling to ensure that consumers and custom officials can check for product authenticity (44).

Protection against theft and counterfeiting is a highly developed area for high-value goods such as electronics and clothes. However, it has not found widespread application in the beverage industry because of the comparatively low unit value of packaged foods (37). Many anti-counterfeiting devices did not work in the past because they were too costly to duplicate. Now the emphasis is on technology, including the use of radio-frequency identification (RFID) tags, security-smart printing techniques, and use of special inks (46). To date, RFID technology has primarily been used to increase convenience and efficiency in supply chain management and traceability, being normally applied to secondary and tertiary packaging (37). However, RFID technology may play an increasingly important role as a security countermeasure to counterfeiting, theft, and tampering of beverage products.

Hi-resolution printed intertwining lines known as guilloches, already used successfully on banknotes, can be printed on primary packaging and/or labels. Microtag particles can be printed using multiple ink layers that combine to form a unique code or holograms that can be integrated into primary or secondary packaging (46, 47).

Microtrace offers a variety of identification and authentication labeling in the form of compounded plastic resins, films, adhesives, paper, security labels, and now security inks (48). A new series of microtaggant security inks will allow any printer to apply the anti-counterfeit technology to packaging using flexographic or screen printing processes. In basic form, microtaggants are a unique numeric code sequence in a multiple-colored layer format. In more complex forms, microtaggants deliver multiple layers of security through the incorporation of several taggant technologies (49). The ink gives products and packages a unique numeric code sequence in a multiple-colored layer format. The codes will be unique for each manufacturer. Once a formulation is produced for a customer, it becomes their exclusive "fingerprint" (48). The acetate films containing microtaggants can be used to produce authenticated, finished holograms.

Thermosensitive inks change color when a packaged product has been exposed to predetermined temperatures, often a sign that it has been counterfeited and introduced into the supply chain. UV inks fluoresce under ultraviolet light and infrared inks can only be detected using a special camera, offering security that does not interfere with the graphic appeal of the package. Metameric inks look identical, but are revealed to be different under a special filter. Scented inks offer both a shelf appeal and security protection (46).

Biowell Technology, a Taiwan-based biotechnology company, has perfected the world's first DNA-tagged anti-counterfeit label. By using bioengineered DNA as an invisible and highly specific identification tag, forensic-level authentication of a tagged item is possible. DNA tagging has the ability to protect brand name products, documents, artworks, ID cards, and so on, from counterfeiting trade tools: precision computer scanning and printing equipment. DNA tagging provides an extremely high counterfeit barrier, because the unique DNA sequence that identifies a tagged object can never be replicated by a counterfeiter (50). This DNA anti-counterfeit label has been applied in luxury brand protection to wine, tobacco, and pharmaceutical industries (50).

Kodak is using new high-tech, anti-counterfeiting technology to help several Napa Valley vineyards in the fight against wine fraud (51). Kodak's Web site describes the company's Traceless system; marketed as an anti-counterfeit solution to the drug industry, it could also be used to protect premium or high-value wines. It uses invisible markers that can be mixed with printing inks or paper and are detectable only with proprietary portable readers. These readers can be leased to clients and cannot be opened without being damaged (52). Industry experts estimate that the problem of wine counterfeiting alone could affect up to 5% of wines sold in secondary markets (51).

TAMPER-EVIDENT PACKAGING

From a consumer safety concern perspective, evidence that a packaged product has been interfered with or tampered with is crucial, especially for retail-ready commodity products such as foods and beverages, some of which have gone through elaborate handling and transport systems. The main purposes in lowering tampering risks are to (a) eliminate tampering and (b) locate the already tampered products on the shelf by integrated identification (53). Tamper evidence technologies that cannot easily be replicated—for example based on optically variable films or gas-sensing dyes, involving irreversible color changes—will become more widespread and cost-effective for disposable packaging of commodity items (54). Piezoelectric polymeric materials might be incorporated into package construction so that the package changes color at a certain stress threshold. In this way, a "self–bruising" closure on a bottle or jar might indicate that attempts had been made to open it. The new packaging is a natural red to light-pink color (54). When punctured, the light and air react with the packaging in a process called photochemical oxidation, which forms a type of bruising (55). This is a form of smart packaging that indicates when the integrity of the barrier has been breached. This breach may result from a malicious individual, an insect, or an inadvertent rupture of the package by poor handling. Packaging protection is an increasingly important part of packaging design. Consumers are now far more aware of product safety, and they require assurances from the manufacturer that the food or beverage products that they purchase are fit for usage and/or consumption. Additionally, aluminum and plastic closures can help customers identify if the package has been opened. The tamper-proof band will split when the package is opened, which provides tamper evidence to the consumers (53). Risks include what the industry terms malicious and nonmalicious tampering. The former is an increasing threat, particularly in the light of increasing terrorist activities and the potential for sabotage or bioterrorism attacks using packaged food and beverage goods as vehicles of delivery (55).

In conclusion, the use of smart packaging technologies by the beverage industry is a vibrant and rapidly developing field. Much has been offered by the use of these technologies in the beverage industry already and also in related product areas. Some leading global beverage brands, like Guinness for example, have used such technology to demonstrate innovation, offer unique product selling points, enhance the product brand, provide consumer convenience, and, of course, sell more product. However, many of the smart packaging technologies relevant to the beverage industry are fledgling in nature, or are still under development, and it will take some time for them to reach their full potential through commercial uptake.

BIBLIOGRAPHY

1. A. ElAmin, "Wanted: Nanotech Packaging and Widget," www.foodproductiondaily.com, April 2006.
2. F. Annette, "Future Food and Drinks Packaging: Emerging Food Ethical, Safe and Convenient Formats," Technical report from Business Insights Ltd., UK, 2008.
3. J. Markarian, "Compounders Smell Success in Packaging," Plastics, Additives and Compounding. March-April, 8(2) 24–27 (2006).
4. M. Webb Pressler, "Appealing to the Senses: Aromatic Packaging Is Just the Start of Futuristic Sales Ploys," *Washington Post*, Sunday, February 19, 2006, p. F01.
5. Anonymous, "Widget (beer)," www.wikipedia.org.
6. Anonymous, "Ball Can Win," Foodproductiondaily.com, May 28, 2003.
7. Anonymous, "Beverage Packaging a Tingle and Kick from the Can," Jobwerx manufacturing network, news release, September 21, 2006.
8. Koontz 2006.
9. Anonymous, "Beverage Companies Tests Flavour-Releasing Packaging," www.piranet.com, July 2, 2003.
10. H. Todd, Top It Off: Value-Added Closures Give Consumers Safety, Convenience and a Little Fun" Beverage World, August 15, 2003.
11. Anonymous, "Closure Adds 'Flavor' to Bottled Water," *Brand Packaging* **November/December** (2004).
12. A. M. Mohan, "Smart Solutions Pour Forth for Beverage Delivery," *Packag. Dig.* **February** (2006).
13. Anonymous, "Sipahh milk flavoured straws," www.unistraw.com, 2007.
14. P. LeGood and A. Clarke, "Smart and Active Packaging to Reduce Food Waste," Smart Material Transfer Knowledge Network, NAMTEC, November 7, 2006.
15. Anonymous, "Cool' cans star at Interpack," *Aluminum Now* **July–August**, (2005).
16. Halliday 2006.
17. M. O'Sullivan and J. P. Kerry, "Smart Packaging Technologies for Beverage Products." in J. P. Kerry and P. Butler, eds., *Smart Packaging Technologies for Fast Moving Consumer Goods*, John Wiley & Sons., Chichester, U.K, 2008, pp. 211–232.
18. Anonymous, "Packaging, a New Twist," www.themanufacture.com, April 2004.
19. Anonymous, "Yogurt Drink Uses Culture Straw" (package of the month, farm produce marketing, brief article), *Dairy Foods* **September** (2002).
20. Anonymous, "Probiotic Drinking Straws," (New Foods, Orchard Maid fruit yogurt drinks packaging)(brief article). *Food Eng. Ingredients* **September** (2002).
21. J. H. Han, "Antimicrobial Food Packaging," *Food Technol.* **54**(3), 56–65 (2000).
22. P. Suppakul, J. Miltz, K. Sonneveld, and S. W. Bigger, "Active Packaging Technologies with an Emphasis on Antimicrobial Packaging and Its Applications," *J. Food Sci.* **68**, 408–420.
23. C. N. Cutter, Microbial Control by Packaging: A Review," *Crit. Rev. Food Sci. Nutr.* **42**(2), 151–161 (2002).
24. A. L. Brody, and J. A. Budny, "Enzymes as Active Packaging Agents in M. L. Rooney, ed., *Active Food Packaging*, Blackie Academic and Professional, New York, pp. 174–192.
25. Anonymous, Code of federal regulations, title 21, parts 170–199, Government Printing Office, Washington, DC., Available from http://www.access. gpo.gov/nara/cfr/waisidx 05/21cfrv3 05.html, October 10, 2005.

26. N. F. F. Soares and J. H. Hotchkiss, “Bitterness Reduction in Grapefruit Juice Through Active Packaging,” *Packag. Technol. Sci.* **11**, 9–18 (1998).
27. N. F. F. Soares and J. H. Hotchkiss, “Naringinase Immobilization in Packaging Films for Reducing Naringin Concentration in Grapefruit Juice,” *J. Food Sci.* **63**, 61–65 (1998).
28. P. Appendini and J.H. Hotchkiss, Immobilization of lysozyme on food contact polymers as potential antimicrobial films. Packaging Technology and Science **10**(5), 271–279 (1997).
29. J. M. Goddard, J. N. Talbert, J.H. Hotchkiss, “Covalent Attachment of Lactase to Low-Density Polyethylene Films,” *J. Food Sci.* **72**(1), 36–40 (2007).
30. D. Berry, “Packaging’s Role: Brief Article. Dairy Foods” **August** (2000).
31. Anonymous, *Lactose Intolerance*, NIH publication no. 94-2751, National Digestive Diseases Information Clearinghouse, Washington, DC. Available from http://digestive.niddk.nih.gov/ddiseases/pubs/lactoseintolerance/, October 17, 2005.
32. T. Nielsen, and M. Jägerstad, “Flavour Scalping by Food Packaging,” *Trends Food Sci Technol.* **5**(11), 353–356 (1994).
33. M. L. Rooney, “Introduction to Active Food Packaging Technologies.” in J. H. Han, ed., *Innovations in Food Packaging*, Elsevier Academic Press Amsterdam, Holland, 2005, pp. 63–67.
34. B. V. Chandler and R. L. Johnson, “New Sorbent Gel Forms of Cellulose Esters for Debittering Citrus Juices,” *J. Sci. Food Agric.* **30**, 825–832 (1979).
35. B. V. Chandler, J. F. Kefford, and G. Ziemehs, “Removal of Limonin from Bitter Orange Juice,” *J. Sci. Food Agric.* **19**, 83–86 (1968).
36. V. Brodie and D. Visioli, “Aldehyde Scavenging Compositions and Methods Relating Thereto,” U.S. Patent 5,284,892, 1994.
37. G. L. Robertson, “Food Packaging Principles and Practice. 2 edition, CRC Press, Taylor and Francis Group, Boca Raton, FL, 2006, pp. 286–309.
38. B. P. F. Day, “Underlying Principles of Active Packaging Technology,” *Food Cosmet. Drug Packag.* **23**, 134–139 (2000).
39. J. Miltz, N. Passy, and C. H. Mannheim, “Trends and Applications of Active Packaging Systems in Food and Packaging Materials Chemical Interaction” in P. Ackerman, M. Jagerstad, and M. Ohlsson, eds., The Royal Society of Chemistry, Publication Number 1995, 162, pp. 201–210.
40. P. Butler, “Consumer Benefits and Convenience Aspects of Smart Packaging” in J. P. Kerry and P. Butler, eds., *Smart Packaging Technologies for Fast Moving Consumer Goods*, John Wiley & Sons, Chichester, U.K, pp. 233–245.
41. M. Agosta, “Thermochromic and Photohromic Inks Are Extremely Useful in Both Security Applicants and Interactive Packaging,” *Ink World*, **October** 00–00 (2002).
42. Anonymous, “Heat and Reveal Label Wins Award,” press release.www.huhtamaki.com, November 6, 2006.
43. Anonymous, “Market driven innovations,” www.brandpackaging.com, September 2006.
44. A. El, Amin, “Fake Food, Drinks Seizures in EU Rise by 200%,” www.food productiondaily.com, October 2005.
45. Anonymous, “Russia Crackdown as Food Fraud Runs Rife,” www.foodnavigator.com, May 2005.
46. Anonymous, “Interpack Offers an Inclusive Look at Global Packaging,” Food and Drug Packaging,” Stagnito Communications Inc., February 2005.
47. P. LeGood, Corus and Wavell Coulson, NAMTEC “Consumer Packaging Opportunities for SMART Technologies,” *Smart Mater. Surf. Struct. Network* **February** (2007).
48. A. El Amin, “Microtrace Launches New Security Inks for tags,” www.beveragedaily.com, June 2005.
49. Anonymous, “What Is a Micro Taggant?” www.microtracesolutions.com.
50. Anonymous, “Biowell Unveils World’s First DNA Anti-counterfeit Label,” www.biowell.com, Press Release, May 2002.
51. J. Park, “Kodak Helps Thwart Wine Fraud with Anti-counterfeit Technology, www.packagingnews.co.uk, June 2007.
52. E. McCoy, “Red-Hot California Cult Wineries Fight Fakes with High Tech,” www.Bloomberg.com, March 2007.
53. J. H. Han, C. H. L. Ho, and E. T. Rodrigues, “Intelligent Packaging” in J. H. Han, ed., *Innovations in Food Packaging*, Elsevier Academic Press, Amsterdam, Holland, 2005, pp. 139–153.
54. P. Butler, “Smart Packaging: Intelligent Packaging for Food, Beverages, Pharmaceuticals and Household Products,” *Materials World*, **9**(3), 11–13 (2001).
55. Anonymous, “Food Science Australia Moves Intelligent Packaging Ahead,” www.foodproductiondaily.com, August 2002.
56. Anonymous, “Lithocraft—Wine Bottle Labels” (brief article), *Wines & Vines* **May** (2001).
57. Anonymous, “Self-Heating Packaging Hits Ready Meals Sector,” www.foodproduction daily.com, Europe, January 5, 2005.
58. Anonymous, “Emmi Launches LACTO TAB,” www.npicenter.com. April 24, 2006.
59. Anonymous, “A Quick Twist to Add the Coenzyme,” VR Beverage Packaging 2006, 20.
60. Anonymous, “Premiere in Europe: Freshness Capsule in the Can,” Ball Packaging Europe launches an innovative packaging solution, Ratingen, Hamburg, and Milwaukee, WI, February 2, 2007.
61. Anonymous. “Labels and Packaging,” B&H Colour Change Ltd. www.drinkpromo.com.
62. E. Bornholdt, “Pimp Your Milk,” VR Beverage Packaging 2006, 32.
63. M. Jackson, “It Was a Draught Idea to Put It in a Can,” www.beerhunter.com, September 2, 1998.
64. A. López-Rubio, E. Almenar, P. Hernandez-Muñoz, J. M. Lagarón, R. Catalá, and R. Gavara, “Overview of Active Polymer-Based Packaging Technologies for Food Applications,” *Food Rev. Int.* **20**(4), 357–387 (2004).
65. L. Summers, “*Intelligent Packaging*, Centre for Exploitation of Science and Technology, London, 1992.
66. L. Vermeiren, F. Devlieghere, M. V. Beest, N. D. Kruijf and J. Debevere, Developments in the Active Packaging of Foods,” *Trends Food Sci. Technol.* **10**, 77–86 (1999).
67. Anonymous, “Driving Innovation in Caps and Closures—PET Planet Insider,” Press release, ColorMatrix Europe Ltd., May 2002.

SOCIOECONOMIC DRIVING FORCES OF FOOD PACKAGING

KIT L. YAM
Department of Food Science,
Rutgers University, New
Brunswick, New Jersey

The food packaging industry is largely driven by market pull to satisfy the needs of the society and economy. Hence, the viability of any new packaging technology depends on its ability to fill these socioeconomic needs. Below are some major socioeconomic forces driving the food packaging industry.

- *Consumer lifestyle.* This lifestyle is the need that drives innovations in conveniently packaged foods. In recent years, consumer lifestyle has been influenced greatly by the aging population, increasing number of smaller families, single-person households, and dual-income families. As a result, the consumer is increasingly demanding food products that are convenient, good tasting, safe, wholesome, and nutritious. This change has also created opportunities for innovative food packaging to satisfy target consumers of diverse demographics. For instance, packaging has played an important role in the development of convenient food products, such as on-the-go snacks, microwavable foods, and refrigerated meals (also known as meal solutions).
- *Value.* This need, defined as benefits/cost ratio, is driven by the consumer. Higher benefits may be achieved by enhancing the functions of packaging to satisfy the unmet needs of the consumer. Lower cost may be achieved by using less expensive packaging materials, using high-speed machines to increase productivity, and using more compact package designs to reduce distribution cost. For instance, material cost may be reduced by replacing a thicker monolayer material with a thinner, multilayer material, production speed may be increased by replacing double-seamed containers with heat sealed containers, and distribution cost may be reduced by replacing heavy glass containers with plastic containers. In the efforts of reducing cost, it is important that product quality and safety are not significantly compromised.
- *Profits.* This need is driven by food companies to maintain or grow their businesses. To earn profits, food companies frequently rely on packaging innovations to meet the ever-changing market needs. Profits also spark intense competition in the packaging industry to fill the market needs. For example, beverages may be packaged in different forms, which include glass bottles, plastic bottles, aluminium cans, and stand-up pouches—and this diversity provides a battleground for packaging materials suppliers to capture the market through optimization or innovation.
- *Food safety and biosecurity.* This food security is the need that drives innovations in protective food packaging. Each year in the United States alone, food-borne diseases cause approximately 76 million illnesses, 325,000 hospitalizations, and 5000 deaths. Microbial contamination is a major cause of food-borne illness that can occur during harvesting, processing, distributing, handling, store display, and food preparation. After the tragic event of September 11, food bioterrorism (e.g., deliberate contamination of commercial food products) has become a serious public threat. Packaging can effectively protect against microbial contamination and product tampering. Innovative food packaging, such as antimicrobial packaging, advanced package integrity inspection systems, tamper-evident packaging, and biochemical sensors are increasingly sought to provide enhanced food safety and biosecurity.
- *Food packaging regulations.* These regulations are the needs that drive research and development that relate to food packaging safety issues, such as the migration of unwanted compounds from package to food (especially during situations such as microwaving) and the use of recycled materials in food packages. The purpose of food packaging regulations is to protect the consumer against unacceptable levels of food contamination by packaging components. This concept also has led to a continued interest in studying the migration of packaging components under various conditions and in developing sophisticated analytical methods to detect volatile compounds at lower concentrations.
- *Environmental concerns.* These concerns drive innovations in environmentally friendly packaging. As landfill sites are diminishing, packaging waste disposal has become a major public concern in many developed countries. A growing pressure exists for the society to favor food packages that use less material and are easy to reuse, recycle, or incinerate. Also, a continued quest is underway for bio-based and biodegradable packaging materials that have good mechanical and barrier properties.

SOUS VIDE OR COOK/CHILL FOOD PRODUCTS

Dong Sun Lee
Department of Food Science
and Biotechnology, Kyungnam
University, Masan, Gyeongnam,
Republic of Korea

The principle of conventional cook/chill processing is to cook, chill, and hold the prepared food for later use, providing time buffer in food service establishments or at home. *Sous vide* processing and packaging is an improved variant of the cook/chill process in which the prepared foods or meals are vacuum-packed in a heat-resistant barrier plastic pouches or trays, pasteurized in hot water, and cooled rapidly. The products are stored by the producer and distrbuted under chilled temperature until mealtime. At the point of consumption, the sealed package may be reheated in a hot-water bath or a combination steam oven; the food contents may be transferred to another container to be heated on stovetop or inside a microwave or conventional oven. Figure 1 presents typical procedures of *sous vide* and cook/chill processing. The

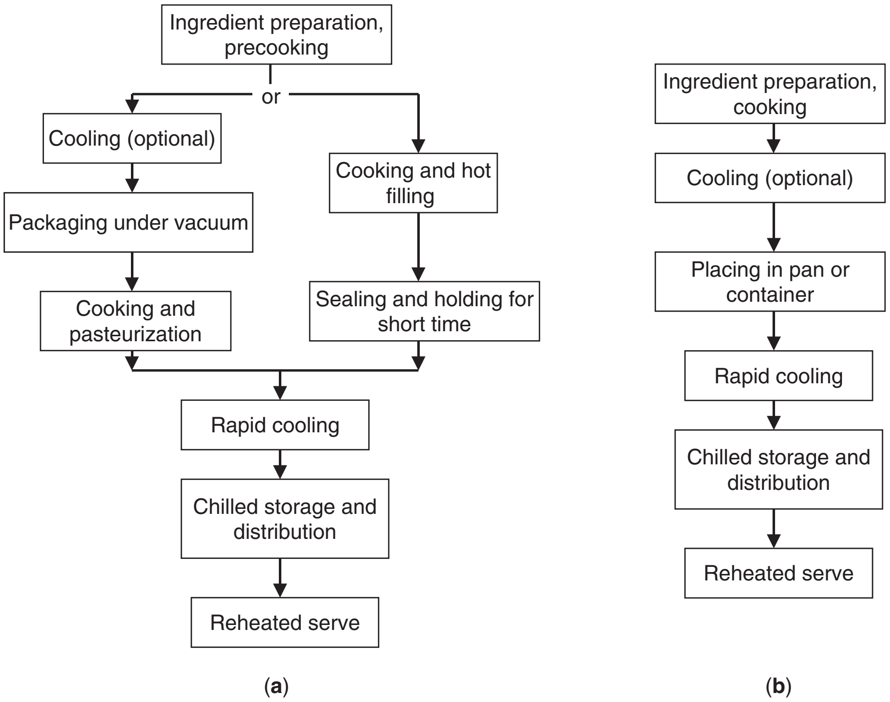

Figure 1. Typical procedures for manufacturing (a) *sous vide* products and (b) cook/chill food products.

term *sous vide* emphasizes the vacuumed packaging conditions of the cook/chilled products. There are wide variations of processes in application of this technology, and thus in actual practice there are often no clear distinctions between *sous vide* and cook/chill.

Sous vide (orignated from the term 'under vaccum' in French) or cook/chill process has been used extensively to produce pre-packaged refrigerated foods for both the retail and institutional markets. The combination of mild heat treatment and refrigeration can produce high-quality ready-to-eat meals with extended shelf life. The *sous vide* and cook/chill products in foodservice systems ensure a time buffer providing the flexibility of meal provision. Increased demand for high-quality prepared foods and productive food service operation from consumers and catering industry has led to the rapid commercial development of these new processes and packaging technologies. Particularly, the *sous vide* and cook/chill technology enabled multiunit restaurant operators to develop a centralized kitchen system that prepares the foods centrally and serves satellite food service locations with effective inventroy control.

PROCESS AND PRODUCTS

Sous vide with Pasteurization

This method is basically a heat-cook of the product that has been filled into a heat-resistant pack and hermetically sealed under vacuum. The heat-cook achieves also pasteurization effect to inactivate vegetative microorganisms and some spore formers. This process prevents postprocessing contamination and retains product quality attributes. Foods such as meat, fish, poultry products, pasta, legumes, or diced vegetables are prepared by this technique. This technique has been most often employed for high-volume uses of hotel, restaurant, and institutional foods, and expanded to retail sector.

The initial preparation includes blanching, grilling, searing, or mixing of meat, seafood, pasta, and/or vegetables. The prepared items or mix is assembled or packaged in a pouch or tray, which is then vacuumized and sealed hermetically. The products may be precooled prior to the packaging step for controlling the vacuumization operation and attaining consistent temperature and quality. The pasteurization or cooking step employs heating under hot water, air/steam combination, or microwave. Hot water may be used for immersing medium or spraying. Usually the pasteurization process is determined based on the product core temperature reaching 75–93°C. Cooking time and temperature depend on the product and shelf life desired (see below). After cooking, the products must be quickly chilled to $<3^{\circ}$C before distribution. The chilling can be attained by agitated ice water bath or air-blast chiller.

Resistance to high temperature (mostly up to 100°C) is the primary requirement of the materials for *sous vide* packaging. High-density polyethylene (HDPE), polypropylene (PP), nylon, and ployethyelene tetrephthalate (PET) are used in single-layer and/or laminated structures. For long-shelf-life products, a high oxygen barrier layer of polyvinylidene chloride (PVDC) or ethylene vinyl alcohol (EVOH) may be placed inside the multilayered structures. For some meat products, a slight adhesion of film to the product to retain moisture and reduce purge is desirable. Good abrasion resistance to withstand possible abuses during distribution is also important. Depending on the packaging equipment, bags, trays, casings, and roll stock are available.

Sous Vide with Hot Fill

Hot fill is most often used for pumpable foods such as soups, sauces, stews condiments, fruit-based beverages, and toppings. The products are usually prepared in large, steam-jacketed kettles and heated to a minimum temperature of 85°C. Products are then transferred via pump/fill stations into preformed clipped casings, or through a vertical form/fill/seal (VF/F/S) machine that uses roll stock to create a flexible pouch. Heating and filling while maintaining that temperature helps to remove air and attain pasteurization effect for the required shelf life. Controlling the temperature of filling is critical for ensuring the required pasteurization and safety of the foods. The proper choice of cooking and packaging equipment depends on the product and the volume requirements. Pump/fill stations and clipped casings work best with low to moderate volumes of production. Sustained, high-volume production of a single product is done most efficiently with VF/F/S equipment and roll stock film.

For maximum shelf life, air inside the casings or pouches must be removed during the packaging process, and rapid chilling is needed to preserve the flavor and nutritional characteristics of the food. For food safety, the product temperature is recommded to be reduced to 3°C in less than 2 h. Tumble chillers are generally most effective in cooling products placed in casings; blast chillers are most often used on VF/F/S packages.

Pouch packaging can be sized to fit the commercial need. Pouches can be produced containing as little as an ounce of product to more than two gallons. Custom size to fit specific requirements (a package containing the exact amount of filling for one pie, for instance) can be easily made, thereby improving sanitation and inventory management and reducing storage requirements.

While *sous vide* packages with hot fill require the same heat resistance and barrier properies as those of *sous vide* with pasteurization, more abuse resistance is particularly required to endure the shock of tumble chilling and to withstand the rigors of distribution.

Cook/Chill with Other Hurdles

Packaging after cooking and chilling in conventional cook/chill process has postprocess contamination risks. Microorganisms present in the environment, packaging materials, and cooking and packaging equipment can transfer to the product after it has been cooked (pasteurized) and can cause spoilage. Sanitation during production and strict temperature control afterward are critical for delivery of safe food products to consumers. The products are preferably cooked and chilled in near-cleanroom conditions to reduce the chance of postprocess contamination.

Other preservation hurdles such as modified atmosphere packaging, irradiation, preservative, and high-pressure treatment can be used in combination to provide longer shelf life. Modified atmosphere packaging is the technique most often used for baked goods, fresh pastas, precooked vegetables, and multicomponent meal items. After preparation, foods are immediately packaged in a gas-flushed environment using a high-barrier material. The gas mixture is selected to fit the particular requirements of the product (see Modified Atmosphere Packaging).

EQUIPMENT

Any cook/chill or *sous vide* methods require specialized kitchen layouts to achieve optimum output. Conventional cook/chill production can be accomplished with standard cooking equipment found in most commercial kitchens. A method to quickly cool the just-cooked products may need to be added, however, if cold storage space or ice baths are not able to handle the volume. Product can be placed in holding pans for chilling in cold storage or immediate use.

The *sous vide* process incorporating pasteurization or hot fillling uses a variety of high-volume production equipment. Steam-jacketed kettles with vertical sweep-and-fold tilting mixers are used for soups, sauces, taco meats, and puddings. The same kinds of kettles equipped with horizontal stationary mixers are used for thicker foods such as mashed potatoes and batters.

Tilting skillets are used for searing, browning, frying, poaching, and boiling. Ground and stew meats, fried foods, and poached fish are generally prepared with this equipment. After cubed meats are seared or browned, they are often transferred to kettles for further preparation as ingredients in soups or stews.

Metered filling stations (pump/fill equipment) are used to pump premeasured amounts of cooked product into clipped casings or premade pouches. After filling, the containers are closed with a metal clip. Moderate volume production of low- and high-viscosity foods with small particulates (less than 1 in. in diameter) are packaged with this kind of equipment.

For larger volumes of pumpable products, VF/F/S equipment is used, creating pouches from roll stock in a continuous operation. These packages are heat-sealed as part of the filling process.

Blast chillers or tumble chillers are used to quickly reduce the temperature of these products. The choice is based on product, package style, and cooling temperature. Blast chillers are most often used for chilling prechilled product to a desired state or moderate speed cooling without mechanical stress. Tumble chillers are the most effective method of reducing cooked food temperatures from pasteurization levels to 3°C. They can be aggressive, however, and are generally used with foods that have little or no particulates.

Continuous-belt chillers operate by transferring the packaged product through a cold-water bath, chilled brine, or spray. They are less abusive and thus a preferred cooling method for pouches vertically form/fill/sealed. The chiller length and way of product pass are designed to ensure proper dwell time to reach the desired temperature. For applications such as meat prepared in cook-in casings, cook/chill tanks are used. This specialized piece of equipment cooks the product in a hot-water bath, and then it drains the water and replaces it with cold water for quicker and more efficient cooling.

SAFETY AND SHELF LIFE

Safety and quality of *sous vide* or cook/chill products rely on the pasteurization and low temperature if the production has been preformed under hygienic process control. The pasteurization process destructs most of pathogenic and spoilage microorganisms, but not all of them. The chilled storage delays the growth of any surviving microorganisms for limited time period, but not forever. The organisms able to survive the pasteurization and grow at refrigerated conditions are of the most concerns to cook/chill products. Psychrotrophic bacteria able to grow below 5°C are of major concerns. Mesophilic organisms cannot grow at temperature below 10°C and is of little concern for properly chill-stored products (typically below 3°C).

Storage even at properly chilled temperature is not sufficient to prevent growth of psychrotrophic organisms. Therefore pasteurization conditions should be selected for required degree of microbial inactivation or shelf life of the products should be limited. For acid foods with pH less than 5.0, any psychrotophic, heat-resistant pathogenic bacteria cannot survive mild pasteurization process. When these products are properly pasteurized, they can be stored without any concerns on public health as long as the storage temperature is controlled below 8°C. However, in the pasteurized foods having pH ≥ 5.0, some heat-resistant pathogenic bacteria can survive and grow to produce toxin, which can be a health hazard. The most noted organisms are vegetative *Listeria monocytogenes* and spore-forming nonproteolytic *Clostridium botulinum*. *L. monocytogenes* is a typical vegetative heat-resistant organism and can be destroyed with milder heat treatment (typically 2 min at 70°C based on product center temperature), providing shelf life less than 10–14 days at below 8°C. Inactivation of nonproteolytic *C. botulinum* requires severe condition (typically 10 min at 90°C based on product center temperature) and can provide longer shelf life up to 40 days at storage below 8°C. The product shelf life is dependent on product's intrinsic characteristics, heat treatment condition, additional hurdles applied, and storage temperature. For maximum shelf life of the products and food safety, storage temperatures between 0 and 3°C are desired.

As an aid to control the quality and safety of *sous vide* or cook/chill products, norms or guidelines are sometimes given for their microbial state (Table 1).

Table 1. Examples of Microbial Norms or Recommendations for Cook/Chill Products

Source or Advising Body	Microbiological Norms
TNO, Netherlands	*Immediately after processing*: Free from vegetative pathogens and toxigenic bacteria Mesophilic aerobic count: 10^3 to max. 10^5 per g Enterobacteriaceae: <10 per g Lactic acid bacteria: <10 per g
	At the end of shelf life Total aerobic count: $\leq 10^6$ per g *Salmonella and Campylobacter*: absent in 25 g *Listeria monocytogenes*: absent in 0.01 g *Staphyloccocus aureus*: $\leq 10^5$ per g *Bacillus cereus*: $\leq 10^5$ per g *Clostridium perfringens*: $\leq 10^5$ per g
DOH guidelines, UK	*Before reheating* Total aerobic count: $<10^5$ per g Salmonellae spp.: absent in 25 g *E. coli* or coliform: <10 per g *C. perfringens*: $\leq 10^2$ per g *S. aureus* (coagulase +ve): $<10^2$ per g *L. monocytogenes*: absent in 25 g

Source: Adapted from Martens (1), Farber (2), and Shapton and Shapton (3).

BIBLIOGRAPHY

1. T. Martens, *Harmonization of Safety Criteria for Minimally Processed Foods, Inventory Report FAIR CT96-1020*, Alma *Sous Vide* Competence Centre, Leuven, Belgium, 1998.
2. J. M. Farber, in J. M. Farber, and K. L. Dodds, eds., *Principles of Modified Atmosphere and Sous Vide Product Packaging*, Technomic Publication, Lancaster, PA, 1995, pp. 425–458.
3. D. A. Shapton and N. F. Shapton, *Principles of Practices for the Safe Processing of Foods*, Butterworth-Heinemann, Oxford, UK, 1994.

General References

M. Dickens, in A. L. Brody, and K. S. Marsh, eds., *The Wiley Encyclopedia of Packaging Technology* 2nd edition, John Wiley & Sons, New York, 1997, pp. 283–285.

S. Ghazala (ed.), *Sous Vide and Cook-Chill Porcessing for the Food Industry*, Aspen Publishers, Gaitherburg, MD, 1998.

J. M. Farber and K. L. Dodds (ed.), *Principles of Modified Atmosphere and Sous Vide Product Packaging*, Technomic Publication, Lancaster, PA, 1995.

M. H. Brown and G. W. Gould, in C. Dennis and M. Stringer, eds., *Chilled Foods, A Comphrensive Guide*, John Wiley & Sons, New York, 1997, pp. 111–146.

SPECIFICATIONS AND QUALITY ASSURANCE

Claire Koelsch Sand
Ameripak, Inc., Stillwater, Minnesota

Dannette Fay Casper
Minnetonka, Minnesota

Specifications have evolved to customer-driven platforms that define in detail how the package fits the product, enable environmental chain of custody tracking, detail environmental characteristics, provide essential measurements, and ensure compliance with international regulations and the final relationship to the final consumer. This is a major switch from specifications that defined solely manufacturing requirements and provided internal documentation. This evolution has provided the impetus of change for quality assurance procedures. Now, quality programs have evolved from the standard ISO certifications to Six-Sigma and data-linked quality value chain-driven programs. This article explains basic elements of specifications and quality assurance. General packaging and component specific packaging specification and quality procedures are addressed.

Specifications are, in the simplest sense, the means of communicating information critical to purchasing, production, and distribution functions between the vendor, product manufacturer, customer, and postconsumer disposal, through the entire value chain. Each of these functions requires the assurance that the correct packaging components are purchased and will be appropriately used and distributed to the end consumer and beyond. For this reason, specifications are clear, have extreme detail, and are the focal point for discussions on packaging.

Specifications also reflect the capability of manufacturing methods to attain certain tolerances and parameters. This ability has evolved as the technology to attain and measure specific package component attributes has improved. One example is the use of digital technology as a means of measuring finish and closure threads versus the human eye. In this case, digitized images enable measurements to the nanometer level and we could define measurements to the nanometer in all closures and threads. But, defining all measurements in a specification to the nanometer level is not always appropriate for all packages. This is because tolerances and parameters that are too tight foster unwarranted manufacturing challenges, higher costs, and environmental damage. And, likewise, specifications that are too loose often result in damaged products. Higher costs and slower manufacturing speeds may be justified in one industry (for example, in medical device packaging) and not another (sporting goods). Achieving the optimal tolerances and parameters makes for an efficient operation and allows for the specification to be accepted within the entire value chain.

Today, packaging specification tolerances and parameters are designed appropriately with the entire packaging value chain in mind and enable the incorporation of environmentally friendly practices, use of high-speed manufacturing, and flexible shipping to protect products efficiently for customers.

GENERAL PACKAGING SPECIFICATIONS AND QUALITY PROCEDURES

General packaging specifications are developed with the needs of the end user in mind and relate expectations independent of the supplier of the packaging materials. General packaging specifications are employed to outline characteristics common to all packaging components of the same component type. For example, rigid injection-molded components such as jars, tubs, and closures are within one component type. The purpose of the general specification is to specify general and broad standards and expectations for components that may include items mentioned in Figure 1. Included in the general packaging specification is the expectation that the packaging will be within quality limits such as the now common Six Sigma procedure. Use of Six Sigma defines acceptable ranges and

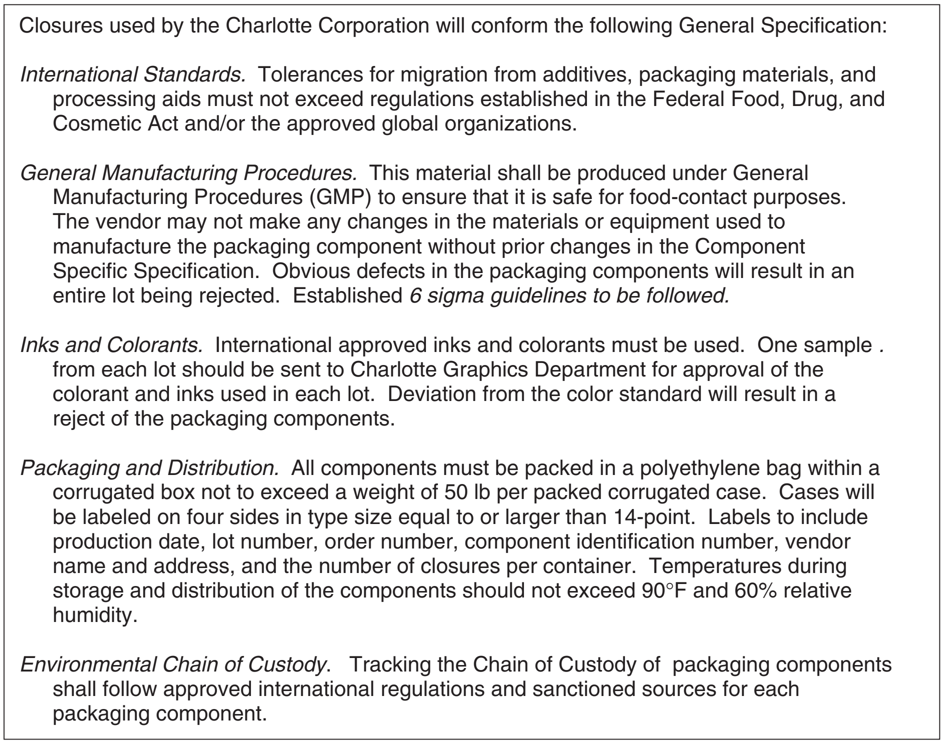

Closures used by the Charlotte Corporation will conform the following General Specification:

International Standards. Tolerances for migration from additives, packaging materials, and processing aids must not exceed regulations established in the Federal Food, Drug, and Cosmetic Act and/or the approved global organizations.

General Manufacturing Procedures. This material shall be produced under General Manufacturing Procedures (GMP) to ensure that it is safe for food-contact purposes. The vendor may not make any changes in the materials or equipment used to manufacture the packaging component without prior changes in the Component Specific Specification. Obvious defects in the packaging components will result in an entire lot being rejected. Established *6 sigma guidelines to be followed.*

Inks and Colorants. International approved inks and colorants must be used. One sample . from each lot should be sent to Charlotte Graphics Department for approval of the colorant and inks used in each lot. Deviation from the color standard will result in a reject of the packaging components.

Packaging and Distribution. All components must be packed in a polyethylene bag within a corrugated box not to exceed a weight of 50 lb per packed corrugated case. Cases will be labeled on four sides in type size equal to or larger than 14-point. Labels to include production date, lot number, order number, component identification number, vendor name and address, and the number of closures per container. Temperatures during storage and distribution of the components should not exceed 90°F and 60% relative humidity.

Environmental Chain of Custody. Tracking the Chain of Custody of packaging components shall follow approved international regulations and sanctioned sources for each packaging component.

Figure 1. General packaging specifications for injection-molded components.

the use of appropriate standardizations. Concepts such as Six Sigma establish appropriate procedures in order maximize efficiencies, define opportunities for cost reduction, and comply with General Manufacturing Practices (GMP). As shown in Figure 1, the general specification is very vague and further refinement to a component-specific specification is required before the packaging components can be of known dimensions and consistency.

COMPONENT-SPECIFIC SPECIFICATIONS

Component-specific packaging specifications for each package component are developed jointly with the parties involved to ensure both an understanding of compliance to specifications. As a case study, if the incoming packaging is an injection-molded closure (see Figure 2), specifications are developed jointly with the resin, tool molding, closure and liner, capping machine manufacturers, and the end user of the closure. All phases of manufacturing the packaging component leading up to the end user contribute to constructing the specification. In addition, all functions throughout the process are connected to other manufacturers by a quality umbrella that ensures the manufacturers and end user what was specified. All internal quality procedures become part of the specification.

Manufacturing specifications are developed jointly between the suppliers of the packaging component, technology functions, and the production facility. The team identifies critical control points throughout the process where a specification is required. Then a test protocol and a specification range are developed to ensure that the production facility operates within the required range. For example, if a closure needs to have a defined removal torque at 2–6 months to meet guidelines of “openability,” specific removal torque values are written into the specification. Furthermore, the relationship between removal torque at 2–6 months and application torque must be known. So, controlling application torque at the manufacturing level is a critical control point. A correlation between removal torque can be made. For example, an

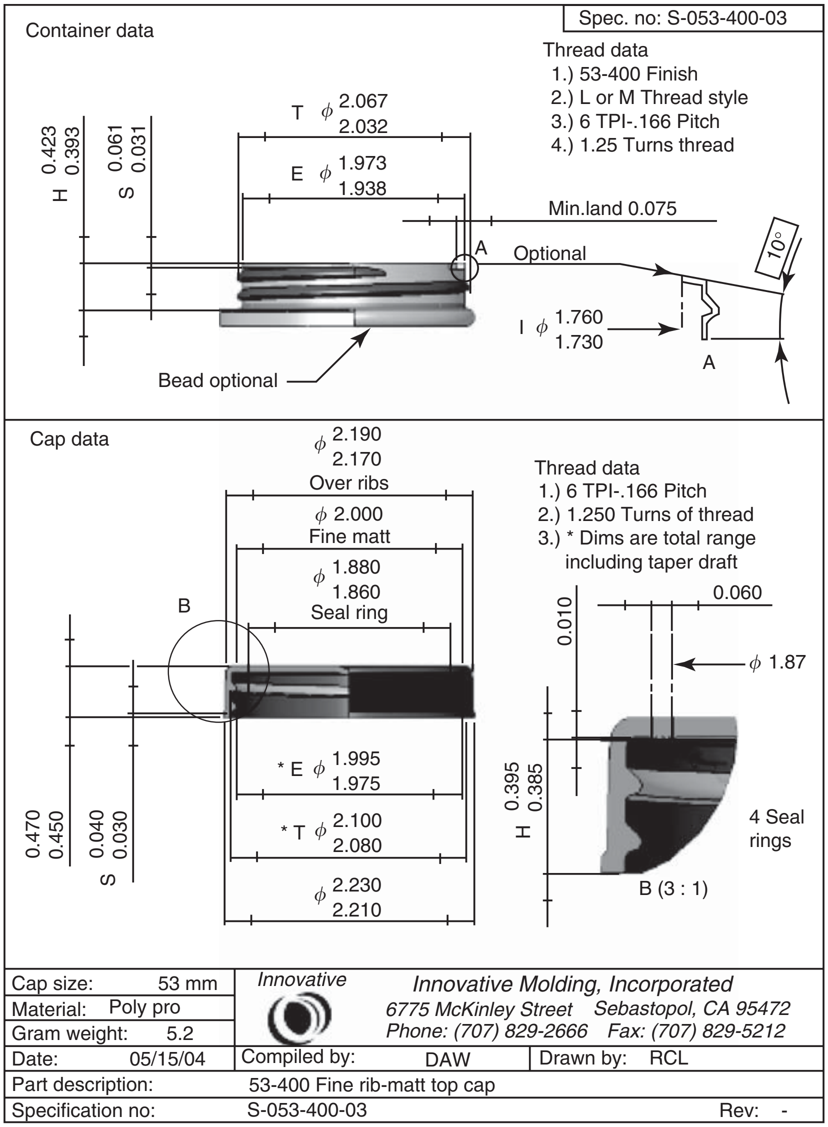

Cap size: 53 mm
Material: Poly pro
Gram weight: 5.2
Date: 05/15/04
Compiled by: DAW
Drawn by: RCL
Part description: 53-400 Fine rib-matt top cap
Specification no: S-053-400-03
Rev: -

Innovative Molding, Incorporated
6775 McKinley Street Sebastopol, CA 95472
Phone: (707) 829-2666 Fax: (707) 829-5212

Figure 2. Representative industry component specification.

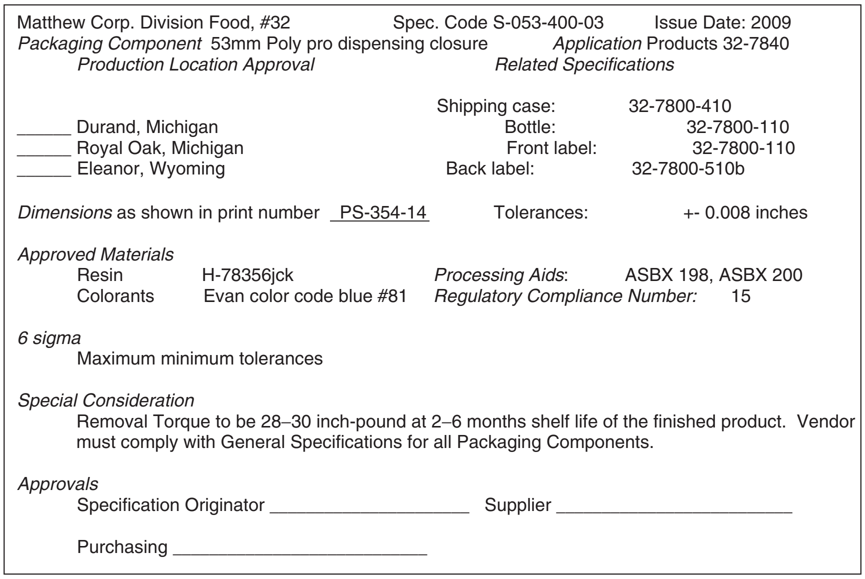

Matthew Corp. Division Food, #32 Spec. Code S-053-400-03 Issue Date: 2009
Packaging Component 53mm Poly pro dispensing closure *Application* Products 32-7840
Production Location Approval *Related Specifications*

Shipping case: 32-7800-410
______ Durand, Michigan Bottle: 32-7800-110
______ Royal Oak, Michigan Front label: 32-7800-110
______ Eleanor, Wyoming Back label: 32-7800-510b

Dimensions as shown in print number PS-354-14 Tolerances: +- 0.008 inches

Approved Materials
Resin H-78356jck *Processing Aids*: ASBX 198, ASBX 200
Colorants Evan color code blue #81 *Regulatory Compliance Number:* 15

6 sigma
Maximum minimum tolerances

Special Consideration
Removal Torque to be 28–30 inch-pound at 2–6 months shelf life of the finished product. Vendor must comply with General Specifications for all Packaging Components.

Approvals
Specification Originator ____________________ Supplier ________________________

Purchasing __________________________

Figure 3. Representative industry quality document.

application torque range of 45–50 in.-lb results in a removal torque of 28–30 in.-lb at 2–6 months shelf life. Thus, on-line checks to verify machine settings of 45–50 in.-lb on each chuck are necessary. Sampling frequency is established.

An example of how specifications are derived using a closure specification follows. Let us suppose that the consumers of the end product require that the removal torque on the closure be 28–30 in. lb. between 2 and 6 months of shelf life for “openability.” Quality protocol will define the acceptable variability. This requires the following working relationships within the value chain:

- The approved resin supplier works with resin suppliers to identify a resin that will have low variability of closure thread dimensions. This will translate into less torque variability.
- The mold maker and closure supplier design the tool to accommodate this resin and provide low thread tolerances.
- Quality specifications detailing defects, Six Sigma, and actions to be taken regarding defects are established jointly by the closure manufacture and the end user.
- Closure supplier and capping manufacturer ensure that the capping equipment is designed for the closure and establishes the application torque range to attain the required 28- to 30-in.-lb removal torque.
- Manufacturer of product verifies that the specification is followed via uniform quality checks on retained samples.
- Disposal companies, retailers, and manufacturer facilitate redefined closure disposal, recycling, or reuse.

Achieving the proper the removal torque is accomplished through specifying the optimal resin, tool design, tolerance within the closure and liner material, and ensuring that the capping manufacturer can produce capping equipment to sufficient tolerances. Figures 2 and 3 illustrate a representative component-specific specification for a closure. Figure 2 expands on the general specification shown in Figure 1 and adds details specific to a closure. Each area from the resin selection to the capping is subject to internal quality procedures to verify that the product specified is the product produced.

Finished package specifications provide the final check in the process to verify that the packaging components

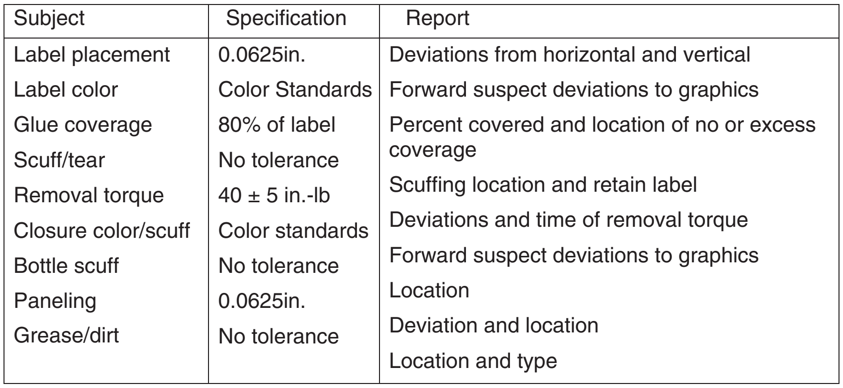

Subject	Specification	Report
Label placement	0.0625in.	Deviations from horizontal and vertical
Label color	Color Standards	Forward suspect deviations to graphics
Glue coverage	80% of label	Percent covered and location of no or excess coverage
Scuff/tear	No tolerance	Scuffing location and retain label
Removal torque	40 ± 5 in.-lb	Deviations and time of removal torque
Closure color/scuff	Color standards	Forward suspect deviations to graphics
Bottle scuff	No tolerance	Location
Paneling	0.0625in.	Deviation and location
Grease/dirt	No tolerance	Location and type

Figure 4. Representative finished-goods specification.

were received, were used, and will arrive to the consumer packaged as intended. This is also established using a standard Bill of Materials or similar document. Finished package specifications are developed by the manufacturing facility, marketing, technology, operations functions, and international environmental concerns. Often visual verifications of package compliance are acceptable, but quantifiable scales of acceptance provide a clear image of shift, manufacturing, and location variability. They also ensure a solid data-based framework for decision making. An example of a finished package specification for a package system using the closure specification discussed previously is shown in Figure 4.

CONCLUSION

Packaging specifications and quality procedures extend throughout the value chain to:

- Communicate expectations of quality and consistency.
- Translate specific needs and features of packaging components.
- Provide internal parameters for the appropriate manufacturing of packaging components.
- Convey consumer needs into clear quantifiable specifications.
- Facilitate tracking of components throughout the chain of custody.
- Define appropriate disposal of packaging components.

STANDUP FLEXIBLE POUCHES

Michael J. Greely
Totani America, Inc., Green Bay, Wisconsin

Conventional standup pouches are those with bottom "horizontal" panel gussets, more commonly known as *bottom gussets*. The gussets are heat-sealed to produce flexible bases on which the pouches may stand without support. This base permits the two sidewalls or facewalls to spread at the bottom when the pouch is filled. In effect, standup flexible pouches are three-panel flexible pouches that are self-standing when full or partially full of product heavy enough to bear down on the bottom panel. In most instances, the bottom panel is a separate sheet of flexible material, but some structures fold a single web sheet into a "W" shape and heat-seal a base from this configuration. Standup flexible pouches with separate bottom gussets have been in existence for several decades.

These pouches are very adaptable for packaging of dry products and liquids. In many applications, they are a suitable replacement for other types of packaging, including plastic or glass bottles, cans, and boxes. The advantages of standup pouches for packaging are numerous. They are environmentally sound, offering source reduction of solid waste ranging from 70% to 90% by both weight and volume. The use of pouches reduces the need for recycling, landfill, and/or incineration. Another advantage of standup pouches is that they offer the use of four- to six-color graphics, for improved shelf appeal and acceptance. Standup pouches offer cost savings, with reduced transportation costs. Unlike the shipping of traditional large plastic empty containers, there is no shipping of "air." There is further savings with reduced inventory space and storage costs for containers. Standup flexible pouches take up only one-eightieth of the cubic feet compared to storing an equal quantity of rigid containers (see Figure 1).

Other standup flexible pouch structures employ sidewall folds or side gussets and overlapping flat sheet bases. Because they do not have the bottom gusset, these pouches do not stand up quite as well, and they have been used more successfully for dry products than for liquids. Both types of standup flexible pouches are currently being used and/or considered for dry products packaging.

Conventional flexible pouches can be fabricated with four face-to-face seals, with three face-to-face/one overlap, or with fin seals with a vertical form/fill/seal machine. In any case, they are generally not able to stand independently because they have a single bottom fin seal or fold that brings the face and back panels together. In the standup flexible pouch, rather than a single seal or fold,

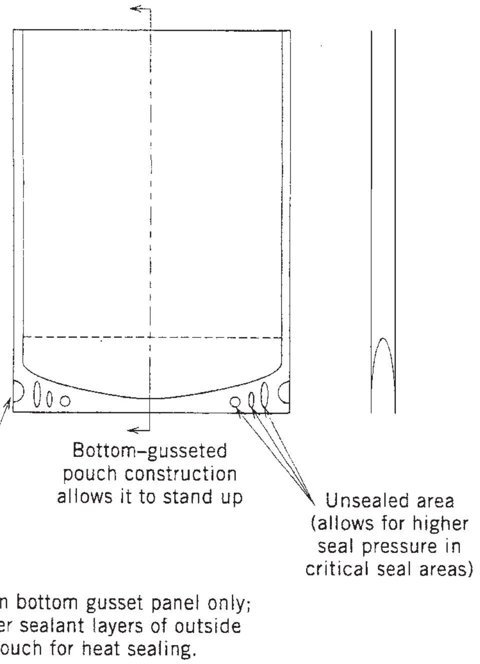

Figure 1. Section view of standup pouch. Unsealed area (allows for higher seal pressure in critical seal areas).

there are two seals: one of the bottom-to-face panel, and the other of the bottom-to-back panel. In unopened form, the bottom gusset panel is generally folded in and hidden. When opened, the bottom panel (or the bottom fins of the expanded face panels) functions as a base on which the pouch stands (see Figure 2).

Standup flexible pouches generally employ two face-to-face fusion side seals and a single face-to-face across-the-top seal in addition to the bottom seals. When viewed from the side, it looks like a distorted triangle with the base of the triangle at the bottom. The across-the-top seals may be interrupted by a spout insert, zipper closure, or other structural devices to facilitate opening, dispensing of contents, and reclosing. The application of spouts and closure devices adds versatility and ease of use to the standup flexible pouches (see Figures 3, 4a,b).

Other flexible pouches that have self-standing capabilities include (a) pouches with side gussets that permit the bottom to fold into a flat position, like a paper grocery sack, and (b) those with four-corner side seals to actually form a rectangular solid shape from several webs of flexible materials. In such pouches, the product itself and not the package provides the rigidity to impart the standup feature (see Figure 5).

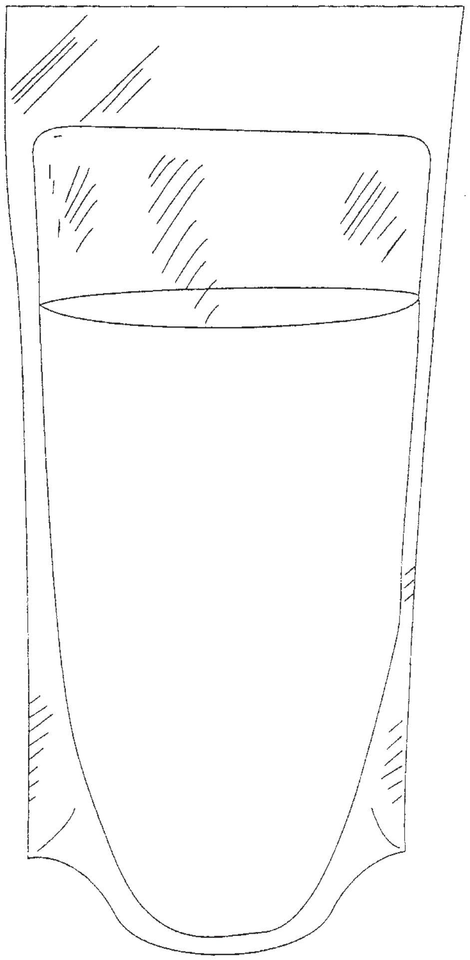

Figure 2. When standup pouch is filled, the bottom gusset opens or expands. Bottom of side panels function as base of pouch.

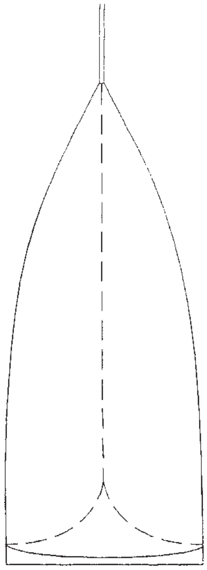

Figure 3. Section view of unopened and filled standup pouch.

HISTORY

Historically, standup flexible pouches have been in existence commercially for about 50 years. The first pouches were developed by French machine maker Thimonnier. In fact, standup flexible pouches are often generically (and erroneously) called Doy Packs after their inventor, M. Louis Doyen, majority shareholder of Thimonnier.

By the end of the 1960s, preformed standup flexible pouches were being used in the United States for sugar candies and in Europe for olives in brine and for wine, among the earlier applications of such pouches for liquid contents. During the early to mid-1970s, the standup flexible-pouch concept was applied to the European-initiated Capri Sun, a shelf-stable fruit-flavored beverage. Capri Sun marked the first major application of standup flexible pouches for liquid product contents.

Relatively few new applications appeared until the mid- to late 1980s, with the reemergence of environmentalist pressures for package source reduction. German liquid detergent manufacturers converted polyethylene bottles into standup flexible pouches. By this time, Thimonnier had developed machines that could produce and fill standup pouches directly from rollstock. Other manufacturers had also developed horizontal form/fill/seal machines for standup pouches, although the majority of liquids were still packaged in premade standup pouches (see “ 2” section). The detergent packaging was reasonably successful in Germany, where strict environmental regulations were already in effect. The same concept, although offering environmental and economic benefits, has not been as successful in North American markets.

Actually, standup flexible pouches found greater commercial success in Japan than in Europe during the 1980s, spear-headed by Fujimori.

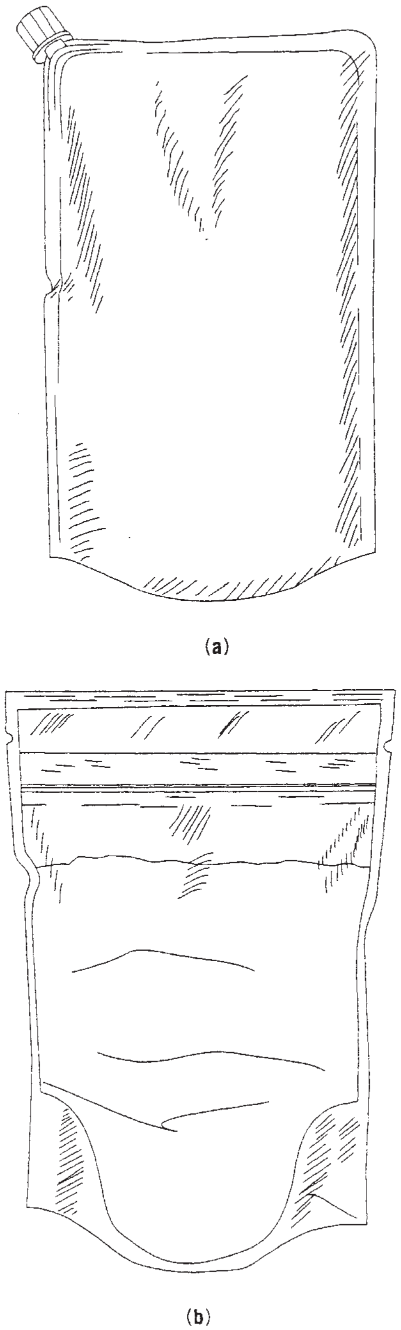

Figure 4. Standup pouches with (**a**) reclosable pour spout and (**b**) reclosable zipper.

TECHNOLOGY

All standup flexible pouches are not alike. In general, they may be classified as one of the following types:

1. *Preformed Pouches.* Pouches are made on a separate converting machine and delivered to a packager in ready-to-open, fill-and-seal form); often with dispensing spouts and zippers already built in.
2. *Horizontal Form/Fill/Seal Pouches.* Pouches fabricated in-line by the packager from flexible roll stock materials on machines that fold the sidewalls and die-cut openings for heat-sealing into the bottom section (see Form/fill/seal, horizontal).

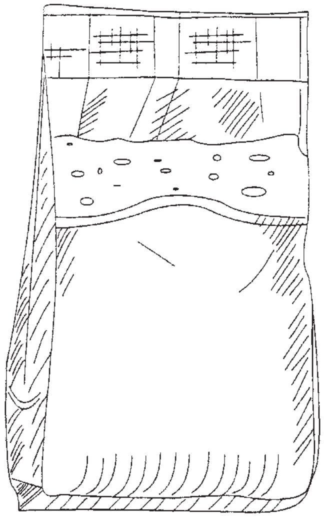

Figure 5. Side-gusseted pouch.

The most widely used standup flexible pouches for liquids are made from preformed pouches produced by flexible package converters using laminated film structures. Most standup pouch flexible-material constructions are relatively simple webs, such as trap-printed polyester film plus an interior stiffener/sealant of low-density or linear low-density polyethylene (LDPE or LLDPE). Effecting a seal in the pouch requires polyethylene-to-polyethylene or analogous fusion heat sealing. The sealing of the bottom-web material to the two face webs requires that the heat sealants face each other, which dictates die cutting large openings in the bottom material (see Figure 1).

Positive sealing is essential for liquid containment because liquid is pressing against the base heat seals. Of significance is the hydraulic pressure exerted by the liquid against the bottom seals, particularly when there is an impact or a drop, and the liquid exerts a sudden high force against the heat-seal area. Thus, although the thick gauges of polyethylene sealant serve to enhance the standup feature, an important reason for their presence in such quantities is to provide sufficient strength to resist hydraulic shock. This problem also justifies the preferred use of LLDPE, which has greater stress resistance than does low-density polyethylene. Many pouches use a nylon cast or biaxially oriented film/polyethylene lamination as the bottom gusset.

In earlier years, the materials employed included nylon film as well as, or in place of, polyester film, plus exterior coatings. The materials for consumer-size pouches now are largely polyester/polyethylene combinations that have proved satisfactory in commercial practice. Output speeds of intermittent motion preformed pouchmaking machines today are always faster than those on form/fill/seal machines because of multilane possibilities as well as the limiting factors of filling and sealing on the filling machines. Furthermore, it is easier to incorporate dispensing and other fitments on separate converting equipment than on in-line form/fill/seal equipment. Preformed pouches, to date, have tended to be more reliable in distribution performance than in-line-made form/fill/seal pouches. Because of this reliability factor, most liquid-containing standup flexible packages to date have used preformed pouches. Since many different fill/seal machines beginning with preformed pouches are commercially available, preformed pouches have commonly been used.

STANDUP FLEXIBLE-POUCH MACHINERY

In general, there are two types of machines for producing standup pouches: preformed pouchmaking machines and horizontal form/fill/seal machines.

Preformed pouch machines are used by converters to make standup pouches that are supplied to a packaging company that will fill the pouch through the open top. These machines utilize single-wound laminated (nonextensible) rollstock. They make pouches in either (a) two lanes of production, for pouches smaller than approximately 7 in. × 11 in, or (b) one lane of production, for pouches larger than 7 in. × 11 in. The same pouch machines can add zipper reclosures and easy-open features, or can be used to make conventional three-side-seal pouches. Some pouch machines use a separate bottom gusset web and can then easily manufacture in two lanes ("2-up" or two pouches at one time). Other machines use one web and plow the bottom gusset into the center-folded material, but are limited to one lane of production.

The advantages of using the preformed pouch are its superior seal integrity and the ease of adding a reclosure feature, such as the reclosable pour spout. Preformed pouch equipment is used more often for packaging liquids and for small-market-niche products.

Packagers utilize form/fill/seal machinery to fabricate and fill the standup pouch. Again, single-wound laminated sheeting is used on the machine to form the pouch and then fill and seal it in-line. This is known as a *one-step operation*, while the preformed pouches must be shipped from the converter to the packager for filling and sealing in a second operation.

The form/fill/seal (one-step) operation offers economies to the packager. Even though the speeds of the pouch-forming operation are typically much slower than those using preformed pouches, the fact that all operations are done in-line saves on storage and labor costs. Standup pouch form/fill/seal machinery is more typically used for the packaging of large-volume, dry granular products such as nuts and snacks (see Form/fill, seal horizontal and vertical).

USE OF STANDUP FLEXIBLE POUCHES WORLDWIDE

The worldwide use of flexible standup pouches, exclusive of Capri Sun, was about 700–900 million in 1993, with the largest fraction being in Japan, with the grand total in the 3–3.5 billion range. There was limited but steady growth during the mid- to late 1990. During recent years, 2005 to 2007, Standup pouches have been growing at a steady rate.

The introduction of the flat bottom standup pouches began in late 2005. The flat-bottom pouch can be made as a relacement for rigid and semirigid packages. The year 2007 has seen the format grow in human and pet food applications. This format is expected to grow steadily into the future.

The following is a discussion of the use of standup flexible pouches throughout the world, broken down by area.

North America

Package material source reduction was a major factor behind the development of product packaging in standup flexible pouches in the United States and Canada. Although there is really no practical way to recycle the standup flexible pouch itself, the initial package reduces material use and results in less material going to the landfill. Standup flexible pouches offer the potential for up to 80% package mass reduction for liquid products such as household laundry products, window cleaners, chemicals, detergents, fabric softeners, lotions and creams, and shampoos. Packagers with environmental concerns began to investigate and test standup flexible pouches that had been commercialized in Germany in the mid-1980s. Using structures of polyester film and sometimes nylon film plus LLDPE and a variety of European packaging equipment, packages were introduced as environmentally "friendlier." A popular application was as a refill for high-density polyethylene (HDPE) bottles.

The first use of a large-size standup flexible pouch in the United States was for evaporated milk. It was retorted to achieve ambient temperature shelf stability.

Standup flexible pouches appear to have effected a more successful entry into the Canadian market for liquid laundry products under the umbrella of being environmentally more "friendly." Some of these laundry products are packaged in the United States. Other products being marketed in standup flexible pouches in Canada include hair shampoo/conditioner, motor oil, and liquid household cleaner.

Europe

Among the products being packaged in standup flexible pouches in Europe are liquid detergents, fabric softeners, shampoos, hand creams, windshield-washer fluids, and latex paint in $\leqslant$5-L sizes. Standup flexible pouches represent a rather large usage for liquid packaging in Europe.

Most European standup flexible pouches for liquids are premade and appear to be three-piece, using 12-μm (0.00048-in.) PET film/0.004- to 0.006-in. LLDPE for the two major faces and the softer, stronger nylon film/LLDPE or PET/LLDPE for the bottom panel. Thus, the flexible structures for standup flexible pouches are not especially unique or difficult to fabricate.

Latin America

In Latin America, standup flexible pouches have been well-received. One reason is the apparent low cost of flexible materials versus their semirigid plastic package counterparts. The pouches have become established in a number of food markets, including mayonnaise, mustard, ketchup, salad dressings, and hot-filled jams and jellies in the fluid category, as well as for dry (powdered) gelatin desserts, syrups, toppings, rice, and analogous flowable dry products. In the nonfood category, several companies pack liquid fabric softeners and detergents in standup flexible pouches. Capri Sun is also present in the Latin American market. The number of standup flexible pouches in Latin America is estimated to be in the 200-million-unit range.

Japan

Almost all are preformed pouches fabricated from polyester film/aluminum foil/cast polypropylene film, with some in glass-coated polyesters as the barrier, packaged on several different types of equipment. A few of the aluminum foil laminated standup flexible retort pouches are distributed in the United States.

In Japan, several supply companies developed both equipment and materials that allowed for a relatively healthy market niche for liquid food products. The concept was so well engineered that it could be applied for retort pouches of low-acid fluid foods and beverages such as milk.

India

Prominent uses include dry rice, motor oil, and related automotive fluids. Environmental factors once again play a role in the choice of pouch packaging. Motor oil represents a significant environmental solid-waste problem, since the conventional extrusion blow-molded HDPE bottles are not recyclable. Large numbers of semirigid bottles become part of the municipal solid-waste stream. The incorporation of motor oil into flexible packages helps reduce this package mass.

ECONOMIC ISSUES

Historically, the standup flexible pouches have not offered lower packaging costs, although this has now begun to change. The actual costs of the standup flexible pouches with liquid dispensing spouts have been more than double the cost of extrusion blow-molded plastic bottles with labels and closures. Another added cost is importing from Europe, Israel, and even Japan. Thus the expected cost savings initially did not materialize, and, in fact, they were negative or at best even. In late 1993, however, a significant change in the costing situation emerged as domestic sources for both preformed and form/fill/seal standup flexible pouches began to develop. In the United States, the costs have come down considerably and are now competitive with the costs for more traditional packaging, such as an extrusion blow-molded HDPE bottle. On the horizon, however, is the ability of plastic bottle blowers to reduce the wall thicknesses and hence the package mass and the economics even more—and, of course, their increasing use of postconsumer scrap plastic for nonfood/cosmetic contents.

Yet another major problem is that all automatic standup pouch flexible-packaging equipment is much slower than bottle-packaging equipment, some down to 25–30 one-liter units per minute. Maximum output speed for any standup pouch flexible packager is in the range of 120 per minute. Most bottling lines for liquid household products begin at 100 and go up to 400 bottles per minute, with some even higher.

Some pouch equipment manufacturers are developing higher-speed machines, with speeds of $\geqslant 400$ per minute. This new equipment will generate greater attention for standup flexible pouches for liquid packaging.

Standup flexible pouches have almost zero vertical compression strength and thus must be totally protected by higher-cost and higher-package-mass secondary and tertiary packaging in distribution. Furthermore, standup flexible pouches are much more difficult to handle than their bag-in-box equivalents.

Another key to the use of standup flexible pouches is a lack of equipment to handle and unitize the pouches into secondary and tertiary packages. Much of the North American output is actually hand-packed into corrugated fiberboard cases. On the other hand, equipment for utilizing flexible pouches is commercially available.

The standup flexible liquid-content pouch market is relatively small, representing only about 1% of the total of all flexible pouches.

BIBLIOGRAPHY

General References

A. L. Brody, Rubbright-Brody, Inc., "The Source Reduction Pros and Cons of Liquid Stand-up Pouches," paper presented at Green Packaging '94, Washington, DC.

A. L. Brody, Rubbright-Brody, Inc., *Worldwide Technology, Markets and Prospects for Stand-up Flexible Pouches*, Packaging Strategies, Inc., 1994.

"Cleaner Refills Spout a Cap," *Packag. Digest* (Sept. 1992).

Liquid Pouch Packaging vs. Rigid Blow Molded Containers: Opportunity or Threat and Environmental Implications 1991–1996, Mastio & Company Pouch Study, 1992.

W. J. Noone, "Stand-up Flexible Pouches: Has Their Time Come?" *Packag. Print. Converting* (March 1995).

STAPLES

J. R. Charters
Paslode Corporation

INTRODUCTION

In packaging, staples are used to assembly wooden pallets, skids, and boxes and crates (see Boxes, Wood). In

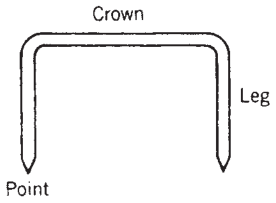

Figure 1. Three basic parts of the staple.

fastening wood to wood, the relatively heavy shank of a nail provides greater shear strength, but staples provide greater holding power because their two legs provide more wood-to-metal contact surface area. Staples are used as a replacement for nails in many applications including furniture, housing, fencing, etc, but the following discussion focuses on packaging applications only.

The staple has three basic parts: the crown, two legs, and two points (see Figure 1). In selecting the proper staple, four factors must be considered: wire size (gauge), crown width, leg length, and type of point.

WIRE SIZE

Heavy-duty staples are designated by the gauge (ga) of the wire prior to manufacturing the staples.

$$16\,\text{ga} = 0.062\,\text{in.} = 1.587\,\text{mm}$$
$$15\,\text{ga} = 0.072\,\text{in.} = 1.829\,\text{mm}$$
$$14\,\text{ga} = 0.080\,\text{in.} = 2.032\,\text{mm}$$

In packaging applications, 16-gauge is the most common. Heavier-gauge staples are used if a particularly strong combination of holding power and shear strength is required, as in the assembling of some heavy-duty skids. Lightwire staples are designated by the width of the wire after manufacturing; for example, “30” is equivalent to 0.030 in. (0.762 mm) finished width; “50” is equivalent to 0.050 in. (1.270 mm) finished width. A “50” staple is heavier and more power is required to drive it.

CROWN WIDTH

The widths most common in packaging are shown in Figure 2.

The staple used most frequently for packaging applications is the heavy-duty 1/2 -in. (1.3-cm) crown. The wide-crown 15/16-in. (2.4-cm) heavy-duty staple is used to prevent pull-through on attachment of porous materials—for example, fastening a corrugated box to a wooden skid. The wide-crown staple is also used over steel strapping to secure it in place. Lightwire staples are used to attach identification tags to the outside of wooden boxes. Plastic liners are attached to boxes with lightwire staples as well. These are just a few of the numerous applications for heavy-duty and lightwire staples in packaging.

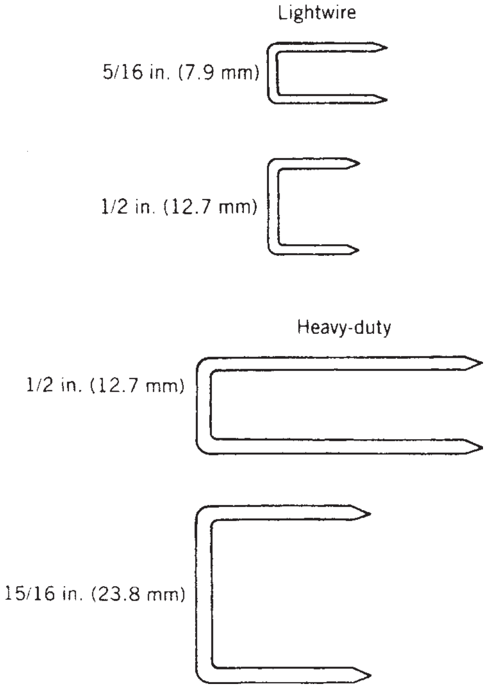

Figure 2. Common crown widths.

LEGS

A staple has two legs of equal length. The staple must be long enough to penetrate the receiving member with sufficient length to adequately hold two pieces of material together. The stress of the application must be considered in order to determine the minimum allowable penetration of the staple in order to do the job.

POINTS

Staple points are cut at different angles to meet various application requirements (see Figure 3). A divergent point causes the staple legs to divert in opposite directions when it is driven into the wood. This type of point is advantageous when clinching is required. Clinching is the process of bending the staple points over the opposite side of the work piece. The staple legs penetrate the wood members then strike a steel plate diverting the points back into the wood. The chisel point, which is designed to cut through the wood without diverging, is the most common in the industry.

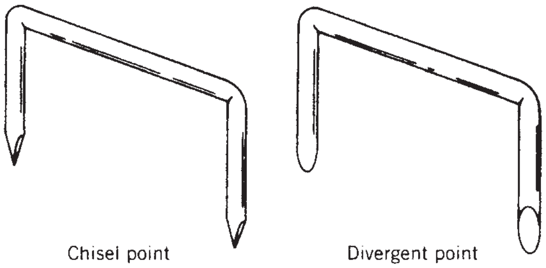

Figure 3. Staple points.

BIBLIOGRAPHY

J. R. Charters, “Staples” in M. Bakker, ed., *The Wiley Encyclopedia of Packaging* Technology, 1st edition, John Wiley & Sons, New York, 1986, pp. 615–616; 2nd ed., R. J. Brody and K. S. Marsh, eds., 1997, pp. 856–857

General References

Products 1, Paslode Company, Lincolnshire, IL, 1979.

Paslode Products, Paslode Company, Lincolnshire, IL, 1983.

STATIC CONTROL

H. Sean Fremon
Cole Static Control, Inc., Akron,
Ohio

Since its inception in the packaging industry approximately 80 years ago, static control has become an integral part of packaging processing. As machinery speeds have increased and materials have changed from paper to plastics and combination laminates and coatings, the need for static control has rapidly expanded.

As a result, the last 10 years have seen the greatest increase in the use and development of static control products to enhance manufacturing processes.

Static is the excess or deficit of electrons on a material. A regular nonpolar atom has a nucleus with a positive charge and negatively charged electrons orbiting it. When one atom comes in close proximity to another, electrons from the orbit draw or tear away electrons, leaving one atom with an excess of electrons and the other with a deficit. This process, called ionization, leaves the atom with the excess carrying a negative charge, while the one with the deficit carries a positive charge.

CAUSES OF STATIC

Static in packaging manufacturing is caused by friction, separation, heat change and improper grounding. Packaging and material handling equipment often incorporate a combination of these to accomplish its function.

Friction

Static is most commonly caused by friction, the rubbing of two materials during packaging processing. When a plastic substrate in web form rubs over a steel roller, or when a pouch is shaped around a forming collar on a vertical form fill seal machine, for example, the plastic picks up the negative charge while the steel roller carries the positive charge. Because metal is such a good conductor, however, the positive charge is bled off. The charge on the plastic is not.

Table 1 shows the likely relative polarity a material will exhibit if it is rubbed with another. The material higher on the chart will hold a positive charge, while those in the lower positions will hold the negative charge.

Table 1. Triboelectric Series

Air	Positive charge
Human skin	
Rabbit fur	
Glass	
Human hair	
Nylon	
Wool	
Silk	
Aluminum	
Paper	
Cotton	
Steel	
Wood	
Hard rubber	
Nickel, copper	
Brass, silver	
Gold, platinum	
Acetate fiber (rayon)	
Polyester	
Cling film	
Polyethylene	
PVC	
Silicon	
Teflon	Negative charge

Separation

When material separation occurs, such as the unwinding of packaging material on a form–fill–seal machine, static charges are produced at the tangent of the unwind. This can result in very high charges that attract dust and contaminants and can cause operator shock hazards. Anyone who has handled Scotch tape may recognize this phenomena. As a piece of tape is pulled off its roll and the tape wraps around itself, it becomes difficult to handle because static has occurred from the separation.

Heat Change

The change in heat during the thermoforming, injection and blow molding of packaging products can cause static charges. As plastic is melted to shape and removed from its appropriate tooling, it undergoes a cooling process that can add more static to existing products. As a part cools, its charge increases and can draw existing dust from the plant atmosphere. In extreme situations, the dust can draw to the product surface and adhere to the hot part, making it nearly impossible to remove later. If the parts undergo additional manual operations, such as bottle printing or container sealing, operators are susceptible to shock (see also Thermoforming).

Improper Grounding

One of the common misconceptions in static control is that if a machine is grounded, no static can be present. However, despite grounding efforts from the material to ground, there can be blocked passages in the form of greased bearings, poor metal-to-metal connections and charges too high to be properly grounded. Because many packaging products are insulators, partial static reduction can be attained, but full grounding is impossible.

Results of Untreated Static Electricity

The development of static-related problems are often inevitable in the manufacturing environment and can lead to a variety of different problems.

Production Problems and Slow Downs

A static charge generates an electrical field that acts like a magnet, repelling similar charges and attracting opposite or neutral charges. This accounts for the attraction between charged materials and machine frames or rollers causing machine jams. In many cases, the machine operator will be forced to run at slow speeds to avoid the problems caused by static.

Dust Attraction

Many products, such as plastic molding materials and film, develop high static charges on their surfaces. This highly charged surface will attract airborne dust, sometimes from more than three feet away, and hold it tightly to the surface. This can lead to high scrap rates. Subsequent operations (such as molding, printing, or laminating) and their end products can be seriously affected by such difficult-to-remove contamination.

Shocks to Personnel

When handling highly charged material, people receive unpleasant shocks either directly from material or indirectly. This can become a safety issue if the operator, after being shocked, recoils into other moving machinery in the plant.

Fires and Explosions

Static is usually found on nonconductive materials where high resistivity prevents the movement of the charge. There are at least two situations where the static charge an move quickly and be dangerous in a combustible atmosphere. The first is where a grounded object intensifies the static field until it overcomes the dielectric strength of the air and allows current to flow in the form of a spark. The second case is where the charge is on a floating conductor such as an isolated metal plate. Here the charge is very mobile and will flash to a proximity ground at the first opportunity.

Damage and Interference in Electronic Components

Strong static fields and static discharges can cause interference with electronic equipment. This can cause metal detectors to malfunction, ink-jet printer boards to burn out, and weighing equipment to give false readings.

TYPES OF STATIC CONTROL DEVICES

Active/Electrical Ionizers

Active electrical ionizing equipment, one of the most effective ways of eliminating static charges, is seen in nearly every large packaging plant that processes plastic or paper at high speeds. These units create ionization by forcing high voltage to ground and breaking down air molecules in between into low levels of ozone. This makes available millions of free positively and negatively charged ions and effectively “feeds” away the static charge by “matching up” ions of opposite charges. Active ionizing equipment comes in many shapes and sizes, including alternating current (ac) bars or rods, blowers, nozzles, and air curtains, steady-state direct current (dc), and pulsed dc units.

Electrical ionizers are driven by power supplies, which transform 110 V or 220 V into voltage ranging from 4500 V to 14,000 V while lowering amperages to a safe level. This equipment is normally custom manufactured and retrofit to the machine it serves. If this equipment is not employed properly, it is useless in packaging applications.

Many bar- or rod-type units are used in web and sheet-based applications, while air-driven units are used for static control on asymmetrical parts such as closures, jars, or thermoformed packages. Most electrical ionizers cannot be used in hazardous areas.

Static Bars. Static bars are most often used in web-based applications in the packaging industry. This equipment is necessary on many form–fill–seal, overwrapping, tamper evident sealing, and stretch wrapping machines. Bars are normally placed within close proximity to the web and do not require any air to operate. Most bar-type ionizers must be within three in. of the substrate as it passes beneath the bar(s).

Air Ionizers. Air ionizers, driven by small fans, compressed air or large blowers for large parts, are used for static control on asymmetrical products. In conveying, unscrambling, filling, denesting, and sorting operations, air ionizers may be necessary to prevent parts from sticking together, prevent operator shock, or eliminate dust attraction.

Nozzles, Guns, and Pinpoint Ionizers. *Nozzles* are used in packaging to clean packaging products and to eliminate static and dust. An example of this is during composite can cleaning. Ionizing *guns* are used in more manual environments where cycle times afford the luxury of cleaning each unit. *Pinpoint ionizers* are used in powder filling, for example, when a small area must be ionized with a small piece of equipment. Powder filling operations often use pinpoint ionizers to discharge materials.

Steady-State DC. Steady-state DC generators allow the production of a desired polarity, positive or negative or both, which makes them ideal for high-speed webs where the polarity of the material is known. This allows control of static with higher voltage where conventional lower-voltage AC static control is less effective.

Pulsed DC. Pulsed DC controllers allow adjustment of positive and negative ions and control of the frequency of ions, in hertz, that the unit produces. This type of equipment is used in clean room and benchtop applications where the use of air is not allowed or where large areas need to be ionized. A “cloud” of ions is produced, making it ideal for hand packaging of medical devices, for example.

Passive

Passive static control incorporates grounding and conductive materials. Gold and silver are excellent conductors but cost-prohibitive. Carbon fiber, stainless steel, and phosphor bronze are more commonly used passive static control devices in the packaging industry. However, tinsel remains most commonly seen because of its low cost and availability. It is recognized by its similarity to Christmas garland. Tinsel is usually loosely tied to the frame of a machine’s ground. Its effectiveness is considered mixed, but if it reduces static to an acceptable level, it does away with the need for more expensive electrical ionizers.

Nuclear Ionizers

Nuclear ionizers, radioactive ionizing devices, incorporate polonium-210, an alpha-emitting isotope. When the alpha particles collide with an air molecule, it creates thousands of positive and negative ions without the use of electricity.

This makes nuclear ionizers ideal for explosion-proof environments where electricity cannot be used and the possibility of an electrically related spark can exist. Coating and chemical packaging are examples of plants where nuclear ionizers must be used for static control. Most nuclear ionizing units have an active life of approximately one year, after which they must be returned and refilled.

The Nuclear Regulatory Commission requires yearly registration of these devices, which must be continually leased instead of owned. The cost of leasing nuclear static control devices versus buying electrical ones is much higher and can make them cost-prohibitive. If a nuclear unit is damaged, the site can be susceptible to strict clean-up requirements by the NRC.

Static Generators

Static generators are used to temporarily bond materials together, generally in web handling processes. Static generators work the same way as static eliminators, except that a ground is not present locally. It is placed on the opposite side of the materials passing between forcing two substrates to accept the ionization, thereby pinning them. Static generators operate on DC, allowing polarity control in packaging operations. Examples of static generator use in the packaging industry include air bubble removal, overwrapping, laminating, in-mold decorating, and heatshrink packaging.

Static control devices, when used properly, can make a great deal of difference in production efficiency and overall costs. It is important that you meet face-to-face with your static eliminator supplier or know your application well when you are specifying or purchasing to assure the equipment is necessary and correct for the application intended. When ionizers results are minimal, it is usually because equipment is improperly placed or the wrong equipment is being used.

In the packaging industry, static “problems” are relative. In one plant, such as a plastic bag converting plant, charges of 10,000 V may be barely noticed. In another plant, such as a medical device packager, charges as low as 1000 V may be attracting airborne dust and foreign matter. It is important to know what actions can be taken to remove existing problems relating to static and to what extent they will enhance the packaging manufacturing and material handling operations.

STRUCTURE/PROPERTY RELATIONSHIPS OF PACKAGING MATERIALS

Kit L. Yam
Department of Food Science,
Rutgers University, New
Brunswick, New Jersey

The properties of materials are closely related to their structures. This article provides an introductory understanding of the structure/property relationships of packaging materials. Four levels of atomic and molecular structures are discussed: (a) *chemical constituents*, what atoms are composed in the material; (b) *chemical bonding*, what forces hold the atoms together to form a molecule; (c) *intermolecular forces*, what forces attract molecules together to form a material; and (d) *spatial arrangements*, how molecules are arranged in three-dimensional space. Although each level has distinct characteristics, the four levels are closely related, with each level affecting the sequential levels in determining the observed material properties.

In a large sense, the first two levels of structures—chemical constituents and chemical bonding—are responsible for the chemical properties of the materials. Chemical properties determine the sensitivity of a material to chemical changes, which involve breaking chemical bonds to transform part or all of the original material into new substances. Examples of chemical changes important to packaging include oxidation, corrosion of metal containers, and incineration of packaging wastes. However, the last two levels of structures—intermolecular forces and spatial arrangement—are responsible for the physical properties of materials. Physical properties determine the physical behavior of a material under conditions, such as heat, pressure, and concentration gradient, which do not involve breaking chemical bonds and forming new substances. Examples of physical properties important to packaging include gas permeation through package walls, migration of volatile compounds from package to food, and shock and vibration during distribution.

Table 1. Chemical constituents, chemical bonds, and intermolecular forces in packaging materials

Material	Commonly found atoms	Chemical bond	Intermolecular forces
Plastics	Major: C, H Minor: O, N, Cl, etc.	C–C backbone, ionic	van der Waals forces
Paper	C, H, O	Covalent	van der Waals forces
Glass	Major: Si, O Minor: Na, K, Ca, Al, etc.	Covalent, ionic	Ionic solid
Metals	Major: Fe, Al Minor: Cr, Sn, etc.	Metallic	Coulombic forces

CHEMICAL CONSTITUENTS

The first level of structure considers the chemical constituents, which are the atoms composed in the packaging material. These atoms determine what type of chemical bonds can be formed and what chemical properties can be expected. In general, consumer packages are constructed of four basic types of materials (plastics, paper, glass, and metals) with chemical constituents shown in Table 1. It is important to note that plastics and paper are carbon-based organic materials, whereas glass and metal are inorganic materials, because this categorization has profound implications on their properties, sources of raw material, manufacturing technologies, and economic value. Like most organic materials, plastics and paper are inherently lighter, weaker, and more susceptible to chemical reactions than inorganic materials such as glass and metals.

Although most packages are made of single materials, some packages are made of two or more different materials to provide the necessary functionalities for certain applications. For example, aseptic cartons for milk and juices are made of a laminate consisting of 70% paper, 6% aluminum (Al), and 24% polyethylene (PE). The typical structure of the laminate is PE/paper/PE/Al/PE, in which the paper layer provides strength and stiffness, the thin aluminum foil layer provides gas and light barrier; the polyethylene layers provide inner and outer protection, heat sealing, and binding between paper and aluminum.

CHEMICAL BONDING

The second level of structure is chemical bonding that determines how atoms are bound together to form a molecule. A chemical bond is formed when the outermost electrons from two atoms interact with each other to achieve a lower and more stable energy state. These interactions involve sometimes the transferring of electrons to form ionic bonds and sometimes the sharing of electrons to form covalent bonds or metallic bonds, depending on the electronegativities of the atoms (i.e., their abilities to attract electrons). Ionic, covalent, and metallic bonds are known as primary bonds, which are characterized by strong bond strengths as shown in Table 2.

Some properties of materials generally associated with the different types of chemical bonding are shown in Table 3.

Ionic Bonding. An ionic bond is formed when two atoms come together to transfer one or more electrons between each other. For example, a sodium atom will transfer an electron to a chloride atom to yield a Na^+ ion and a Cl^- ion:

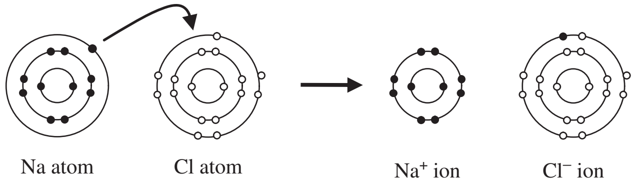

The electrostatic attraction binding the oppositely charged ions together is known as the ionic bond.

Formation of an ionic bond occurs between two atoms of greatly different electronegativities. Typically, one atom is a metal (such as Li, Na, Al, or Fe) because of its tendency to donate electrons, and the other atom is a nonmetal (such as O, F, S, or Cl) because of its tendency to accept electrons. Ionic materials are strong, hard, brittle, and resistant to aggressive chemicals, and they also have a high melting point.

Compared with covalent and metallic bonds, ionic bonds are found less commonly in packaging materials. Nevertheless, ionic compounds are found in protective layers for packaging applications, such as alumina (Al_2O_3) on foil and tin oxide (SnO_x) on tin plate. Ionic bonds are also found in ionomers, which are copolymers that contain both ionic and nonionic repeat units. Shown below is the chemical structure of Surlyn (DuPont, Wilmington, DE), which is an ionomer polymer (see the Inomer article) that contains a small portion of

Table 2. Typical bond strengths of chemical bonding and intermolecular forces

	Interaction type	Bond energy ($kJ\,mol^{-1}$)
Chemical bonding	Covalent bonds	200–800
	Metallic bonds	100–400
	Ionic bonds	40–500
Intermolecular forces	Hydrogen bonds	4–40
	Dipole–dipole forces	0.15–15
	Ion–dipole	5–60
	Dispersion forces	0.4–4

Table 3. Properties associated with chemical bonding

Property	Ionic bond materials	Covalent bond materials	Metallic bond materials
Melting and boiling points	High melting and boiling points because of strong attractions between atoms (ions)	Relatively low thermal transition temperatures caused by weak attractive forces between molecules	High melting and boiling points caused by attraction of metal ions with the delocalized electrons
Electrical and thermal conductivity	No electric conductivity and poor thermal conductivity because of the absence of mobile charged particles	The electron sharing makes the electrons tightly bound to atoms, thus no charge available for conductivity	High conductivity because of easy transmission of vibration energy through the "electron cloud"; metallic luster coming from free electrons
Mechanical properties (hardness and brittleness)	Generally hard because the ions are strongly bound to the lattice; also often brittle because of strong repulsion between equal charges at close proximity at the distortion	Generally soft because the intermolecular bonds are weak and easily displaced	Dense, hard, and strong with tightly packed atoms in the lattice; malleable and ductile as the distortion is possible without disrupting the interatomic bond

methacrylic acid partially substituted with Na in its carboxyl group:

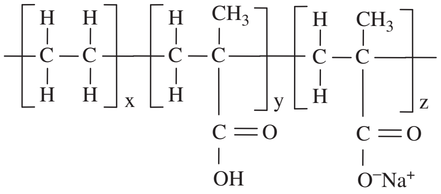

$$-\!\left[\mathrm{CH_2{-}CH_2}\right]_x\!-\!\left[\mathrm{CH_2{-}C(CH_3)(C{=}O)OH}\right]_y\!-\!\left[\mathrm{CH_2{-}C(CH_3)(C{=}O)O^-Na^+}\right]_z\!-$$

The ionic groups in an ionomer may interact each other to form a cluster with ionic bonds as shown in Figure 1. This type of bonding may be considered partly as intramolecular bonding and partly as intermolecular interaction. The ionomer is used as sealant between a plastic layer and a foil in packaging applications where excellent heat sealability and hot tack are required.

Metallic Bonds. Metallic bonds are found in aluminum foil, metal containers, and other metal-containing packaging materials. Atoms in metal typically have low electronegativities and are willing to share electrons freely, not only with neighbor atoms but also with all other atoms in the lattice. For example, Figure 2 shows the formation of metallic bonding, when aluminum atoms lose their outer electrons, become positively charged Al^{+3} ions, and those electrons in turn form a "sea of electrons" to surround the regularly spaced Al^{+3} ions. It is important to note that the electrons in metallic bonds are "delocalized" or free, which means that they are nondirectional and free to move in all directions in the lattice, unlike the electrons in covalent bonds that are bound to specific atoms and locations.

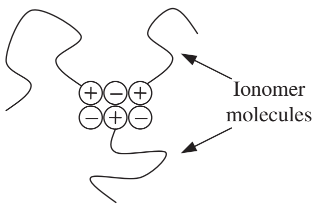

Figure 1. Ionic interactions in ionomer molecules.

Metallic bonds are largely responsible for the strength, malleability, and ductility of metals. Malleability is the ability to be hammered into various shapes; and ductility is the ability to be drawn out into thin wires, whereas the shape of the material is changed without cracking or breaking in both cases. Therefore, a metallic material such as an aluminum sheet may be rolled into a thin aluminum foil, or an aluminum disk may be hammered into cups used for the popular soda cans.

To explain why metallic bonded materials are malleable and ductile, Figure 3 shows several layers of metal ions held closely together.

Although strong, metallic bonds are not bound to specific metal ions. Hence, forces from hammering or stretching can cause layers of metal ions to slide over each another. As the metal ions move, they also attract the delocalized electrons to their new locations, whereas the sea of electrons is not broken and still holds the metal ions together.

Metallic bonds are also responsible for high electrical and thermal conductivities of metals. The high electrical conductivity may be explained by the ability of the delocalized electrons to flow freely in the lattice of positive metal ions when a voltage is applied. The high thermal conductivity may be explained by the ability of metal ions to absorb heat energy by vibrating faster. Because the metal ions are closely packed in the lattice, the faster vibrating ions can collide with their neighboring ions to transfer the heat energy.

Covalent Bond Model. Covalent bonds are the most abundant chemical bond found in plastics, paper, and glass. A covalent bond is formed when two atoms come together to share their outermost electrons. Typically, these atoms have high and similar electronegativities, which means that they have strong affinity to electrons and are willing to share them with their partner atoms. These atoms are from nonmetal elements (such as C, O, N, and Cl) located on the right side of the periodic table. As an example, shown below are two oxygen atoms sharing

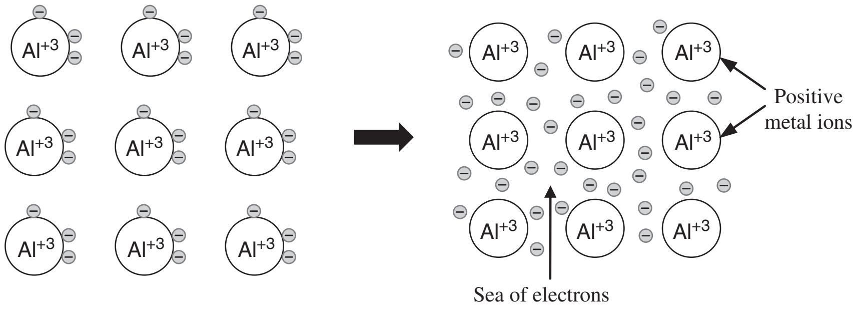

Figure 2. Formation of metallic bonding.

two pairs of outermost electron to form an oxygen molecule joined by a double covalent bond:

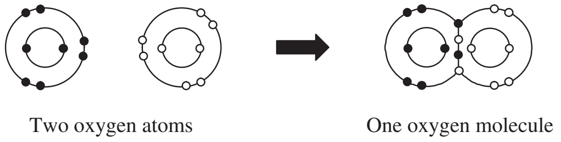

Although small molecules such as O_2 and H_2O are important to products such as food, the molecules in packaging materials are much larger and more complex. For example, polyethylene (PE), which is the most frequently used packaging polymer shown below, is a molecule consisting of thousands of C–C and C–H covalent bonds:

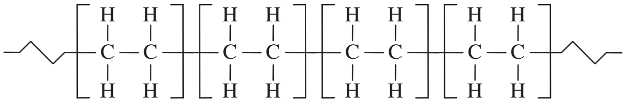

$$\sim\left[\overset{\displaystyle H}{\underset{\displaystyle H}{C}}-\overset{\displaystyle H}{\underset{\displaystyle H}{C}}\right]\left[\overset{\displaystyle H}{\underset{\displaystyle H}{C}}-\overset{\displaystyle H}{\underset{\displaystyle H}{C}}\right]\left[\overset{\displaystyle H}{\underset{\displaystyle H}{C}}-\overset{\displaystyle H}{\underset{\displaystyle H}{C}}\right]\left[\overset{\displaystyle H}{\underset{\displaystyle H}{C}}-\overset{\displaystyle H}{\underset{\displaystyle H}{C}}\right]\sim$$

For a polymer molecule, the degree of polymerization determines the number of covalent bonds and thus molecular weight, which affects the property and performance of the material. Although C–C and C–H bonds are the most common, C═C, C═O, O–H, and other covalent bonds are also frequently found in plastics and paper. The most common covalent bond in glass is Si–O.

An important attribute of a covalent bond is bond polarity, which is determined by the difference in electronegativities between the atoms joined by the bond. When the difference is zero or negligible, the electrons are shared equally between atoms, and a nonpolar covalent bond such as C–C is formed. When the difference is small but significant, the electrons are no longer shared equally between atoms, and a polar covalent bond such as C═O is formed. When the difference is large, the electrons are no longer shared but are transferred from one atom to another, and an ionic bond is formed.

Bond polarity can greatly affect the polarity of the molecule and thus the properties of the material. If all its bonds are nonpolar, the molecule is also nonpolar. If some of its bonds are polar, the molecule could be polar or nonpolar, depending on the symmetry of the molecule. This concept is illustrated by considering the covalent bonds in two common packaging polymers, polyvinyl chloride (PVC) and PE:

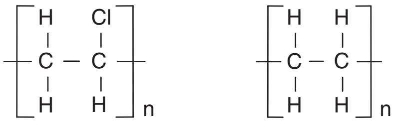

$$\left[\overset{\displaystyle H}{\underset{\displaystyle H}{C}}-\overset{\displaystyle Cl}{\underset{\displaystyle H}{C}}\right]_n \qquad \left[\overset{\displaystyle H}{\underset{\displaystyle H}{C}}-\overset{\displaystyle H}{\underset{\displaystyle H}{C}}\right]_n$$

PVC (polar)   PE (nonpolar)

Because C–H and C–Cl are both polar bonds, PVC is a polar molecule. But PE is a nonpolar molecule, because its C-H bonds are arranged symmetrically in such a manner that the dipoles cancel out, which results in no net dipole. The more polar the molecule, the stronger are the intermolecular forces, and the stronger intermolecular forces accounts for the reason why PVC has higher mechanical and barrier properties than PE.

Covalent bonds may be broken when packaging materials such as plastics and paper are exposed to severe conditions, such as aggressive chemicals, high temperature, and high shear. High temperature, for example, is encountered during heating of food packages in the microwave oven (especially when a heating device known as susceptor is used in the package) or in the conventional oven. High temperature and high shear are frequently encountered during the processing of polymers such as extruding polymer resins to form plastic films or containers. A major concern associated with the breakage of chemical bonds is possible formation of undesirable oligomer compounds, which can migrate from package to food.

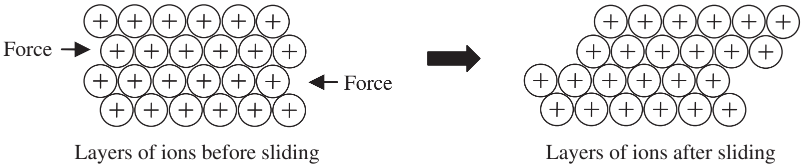

Figure 3. Sliding between layers of metal ions.

Table 4. The strength of some selected covalent chemical bonds at 25°C

Bond	Bond energy (kJ mol^{-1})	Bond	Bond energy (kJ mol^{-1})
C–Cl	338	O–H	463
C–F	565	C–C	348
O–O	146	C=C	612
Si–O	466	C–N	305
C–H	412	C–O	360
N–H	388	C=O	743

Covalent bonds are typically stronger than metallic and ionic bonds. The amount of energy required to break a covalent bond between two linked atoms is known as bond dissociation energy. Some covalent bond energies relating to packaging materials are shown in Table 4.

It needs to be mentioned that a molecule may have more than one type of chemical bond. For example, ionomer is a packaging polymer that consists of mostly of covalent bonds and a small but significant number of ionic bonds (Na^+ or Zn^+ ions) to its side chains. Its covalent-ionic nature provides ionomer with unique properties (heat seal strength, abrasion resistance, and melt elasticity) not found in polymers with only covalent bonds.

INTERMOLECULAR FORCES

The third level of structure considers the intermolecular forces that attract molecules together. Although atoms are bond together tightly by strong covalent bonds to form a molecule, a group of molecules are held together loosely by weak intermolecular forces. Typically covalent bonds are 10–100 times stronger than intermolecular forces. Intermolecular forces can be cohesive between like molecules in surface tension or adhesive between unlike molecules.

Plastics and paper are composed of polymer molecules, and their physical properties are greatly influenced by the intermolecular forces between these molecules. When a PE film is punctured or melted, what are broken are only the intermolecular forces that hold the PE molecules, whereas the much stronger covalent bonds holding the C and H atoms remain unaffected. The weak intermolecular forces are largely responsible for the low strength and low melting point of these materials.

However, glass and metal are not composed of a collection of molecules. A glass or metal material is composed of a single giant molecule, in which all the atoms are bound together by primary bonds to form a network. Glass is a network of Si-O bonds extending throughout the lattice, and metal is a network of metallic ions held in the sea of electrons. Hence, cutting a metal container involves breaking metallic bonds, and shattering a glass bottle involves breaking covalent bonds. Metal and glass are inherently stronger and stiffer than plastics and paper, because metallic bonds and covalent bonds are much stronger than intermolecular forces.

Intermolecular forces, which are often called van der Waals forces, correspond to a combination of different ways of attraction among molecules according to their dipole moment (dipole–dipole, dipole-induced dipole, and dispersion forces). Dispersion forces are the weakest intermolecular force (one hundredth-one thousandth the strength of a covalent bond), hydrogen bonds are the strongest intermolecular force (about one-tenth the strength of a covalent bond): dispersion forces < dipole-dipole interactions < hydrogen bonds.

Dipole–Dipole Forces. Dipole–dipole forces are intermolecular forces between polar molecules: There are attractive forces between the positive end of one polar molecule and the negative end of another polar molecule. They have a significant effect only when the molecules involved are close together (touching or almost touching). Dipole–dipole forces have strengths that range from 0.15 to 15 kJ mol^{-1}, being much weaker than ionic or covalent bonds.

Consider the chemical structures of two polar molecules, PVC and ethylene vinyl alcohol copolymer (EVOH):

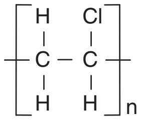

$$-\!\left[\overset{\mathrm{H}}{\underset{\mathrm{H}}{\mathrm{C}}}-\overset{\mathrm{Cl}}{\underset{\mathrm{H}}{\mathrm{C}}}\right]_n\!-$$

PVC

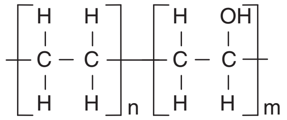

$$-\!\left[\overset{\mathrm{H}}{\underset{\mathrm{H}}{\mathrm{C}}}-\overset{\mathrm{H}}{\underset{\mathrm{H}}{\mathrm{C}}}\right]_n\!\!-\!\!\left[\overset{\mathrm{H}}{\underset{\mathrm{H}}{\mathrm{C}}}-\overset{\mathrm{OH}}{\underset{\mathrm{H}}{\mathrm{C}}}\right]_m\!-$$

EVOH

For PVC, each C–H bond is polar because carbon is more electronegative than hydrogen, and the C–Cl bond is polar because chlorine is more electronegative than either carbon or hydrogen. Each hydrogen atom will take on a partial positive charge, and the chlorine atom will take on a partial negative charge resulting in a net dipole because the dipoles will not cancel out because of the difference in electronegativities of carbon, hydrogen, and chlorine. For EVOH, vinyl alcohol part is polar because the OH group is more electronegative than hydrogen. When these molecular chains are in close proximity, dipole–dipole attractions are formed.

Hydrogen Bonding. This is a special type of dipole–dipole interaction. It occurs when a hydrogen atom is covalently bonded to a small highly electronegative atom such as nitrogen or oxygen. The result is a dipolar molecule. The hydrogen atom has a partial positive charge and can interact with another highly electronegative atom in an adjacent molecule (again N, O, or F). This results in a stabilizing interaction that binds the two molecules together. Hydrogen bonds vary in their bond strength from about 4 to 40 kJ mol^{-1} being much weaker than typical covalent bonds, but are stronger than dipole–dipole or dispersion forces.

Hydrogen bonding is important for some paper and plastic packaging materials. For example, the high oxygen barrier of EVOH is largely caused by the formation of hydrogen bonding between the EVOH molecular chains.

Dispersion Forces. These intermolecular forces exist between nonpolar molecules. They are forces between temporary dipole molecules as a result of positive nuclei of one molecule attracting the electrons of another molecule. Although dispersion force is the weakest intermolecular force, it plays an important role in many nonpolar packaging polymers because of their long molecular chains. For example, the molecular weight of PE is typically larger than 100,000; along the chain of this large molecule many dispersion forces exist, and the summation of these many forces can significantly affect the properties of the polymer.

SPATIAL ARRANGEMENTS

The fourth level is to consider spatial arrangements, which includes how molecules are arranged in the material. In addition to chemical bonds, the spatial arrangement of atoms in the molecule and the molecular weight are also important factors determining the chemical and physical properties, particularly for polymeric materials including plastics and paper. The fine structure of material observed by microscopy resulting from chemical composition, molecular arrangement, and crystalline degree is sometimes referred to as morphology.

Tacticity. The atomic arrangement in three-dimensional molecular configuration is called stereochemistry or tacticity. The way the molecular or ionic units are geometrically organized distinguishes between crystalline and amorphous solids: the former has symmetric, periodical, and well-ordered structural organization, and the latter is asymmetric, not periodical, and unsettled (Figure 4).

For example, methyl groups in polypropylene (PP) may be positioned in three different ways: Isotactic PP has all the methyl groups on the same side of the chain; syndiotactic PP has the substitute group alternately above and below the chain plane, and atactic PP is with random sequence (Figure 5). The tacticity or steroregularity is important in determining the ability of the solid material to crystallize: Regular atomic arrangement in the molecular structure makes the molecules easily pack together into rigid crystals. Therefore, isotactic and syndiotactic PPs are crystalline, whereas atactic is amorphous.

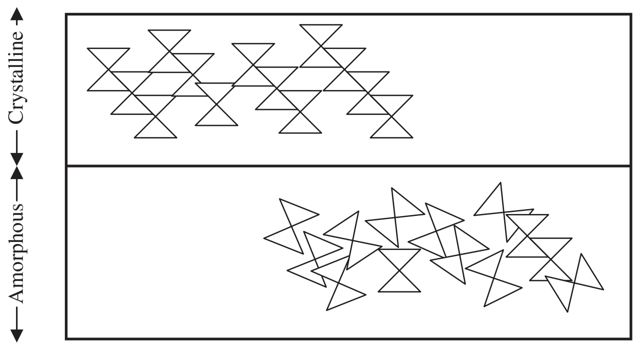

Figure 4. A schematic representation of the crystalline and amorphous spatial configuration of solid constituents.

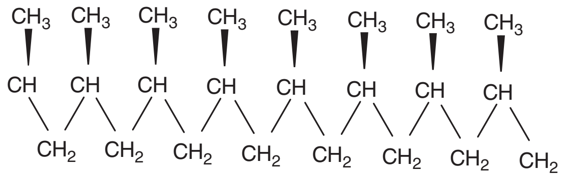

(1) Isotactic

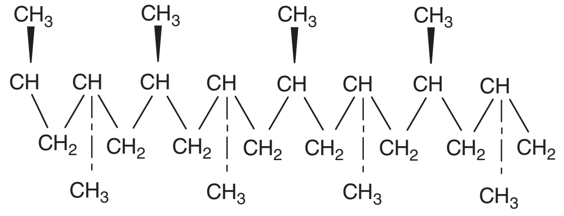

(2) Syndiotactic

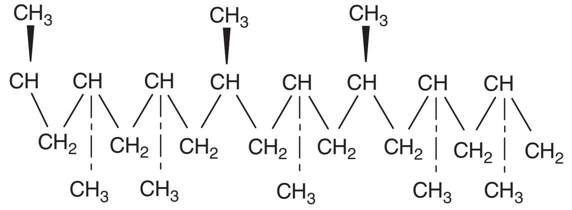

(3) Atactic

Figure 5. Different tacticities in polypropylene.

Crystalline Versus Amorphous State. The crystalline structural organization of solids applies to structures composed of repeating identical units that orderly disposed with a fixed geometric relation between each other. The framework derived from such a symmetric organization of units may be more or less complete and homogeneous (with vacancy or impurities), but it always has the lowest energy, and therefore is the most favored one. Stereochemistry, kinetics of solidification from a liquid state, and presence of crystallization promoters are factors that determine the degree of crystallinity. The performances of the packaging materials are greatly affected by the crystalline or amorphous structure (Table 5). Glass is typically a noncrystalline, amorphous material. Ceramic material may be in different degrees of crystallinity

Table 5. The crystalline and amorphous state for general categories of materials used for packaging

Material	Spatial organization
Glassy	Amorphous
Ceramic	Crystalline/amorphous
Cellulosic	Crystalline (pure cellulose)
Metallic	Crystalline
Plastic	Amorphous/crystalline

depending on the chemical composition and manufacturing conditions. Most plastic materials are composed of crystalline and amorphous regions. It is possible to modulate their degree of crystallinity by processing of the packaging materials.

Important consequences of the crystalline state are high density, good mechanical properties, reduced free volume, and low gas transmission throughout. Some solids can crystallize in different forms (this behavior is called polymorphism), and each form has its definite set of chemical and physical properties. This, for instance, is an important point in understanding different resistance to corrosion or mechanical strength of different types of stainless steel or aluminum alloys. The potential of the crystalline structural organization, in establishing several and even unusual properties, is well exemplified by the fullurenes, discovered in the mid-mid-1980s, which show carbon atoms arranged in hollow spheres (that can be possibly filled with functional molecules) or in the recent “nanotubes” or “nanogears,” which appeared in the most advanced metallic nanotechnologies.

Solid structure that lacks orderly arrangement is of an amorphous state. Amorphous materials like glass do not have a definite melting point as crystalline materials do. The structural organization of amorphous materials can be explained well by that of liquids, which are deprived of any order or symmetric organization. Amorphous solids also behave like solidified liquids, which have properties of flowing, ductility, and transparency. An amorphous solid is formed when the molecular chains have little orientation and regularity throughout the bulk structure.

Most plastic materials are semicrystalline, and the controlled combination of crystalline and amorphous structures can attain a material with advantageous properties of strength and stiffness. Generally, an increase in crystallinity causes increased density, increased tensile and compression strength, increased gas and moisture barrier, increased sealing temperature, decreased transparency, decreased tearing resistance, decreased impact strength, decreased toughness, and decreased elongation.

Molecular Orientation. As shown in Figure 6, this involves stretching an unoriented thermoplastic below T_m (melting temperature) but above T_g (glass transition temperature) either uniaxially (in machine direction only) or biaxially (in both machine and transverse directions), to induce alignment of polymer chains and then retain the acquired molecular structure thereafter, for the purpose of achieving better optical, mechanical, barrier, or other properties. The oriented films have a tendency to shrink with heating and are used for shrink packaging. When dimensional stability is required, the oriented film is heated even more to relax or set the structure.

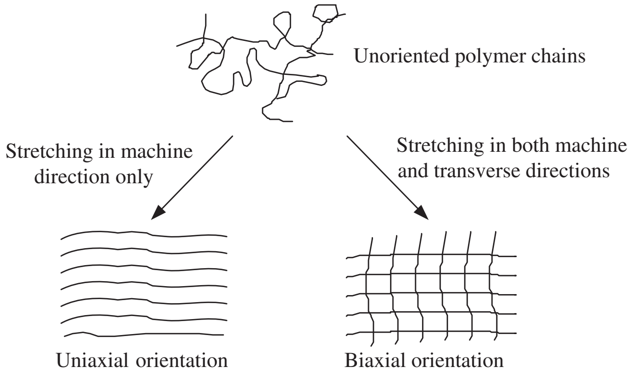

Figure 6. Stretching polymer chains to induce molecular orientation.

Stretching of thermoplastics to induce molecular orientation typically occurs in processes such as blown film extrusion, injection stretch blow molding, and cast film extrusion (when a tenter frame is used). Molecular orientation is achieved with proper control of temperature and rate of stretching to develop and retain the desirable molecular orientation.

STYRENE–BUTADIENE COPOLYMERS

D. L. Hartsock
Phillips 66 Company,
Houston, Texas
Updated by Staff

INTRODUCTION

The styrene–butadiene copolymers (SB) that are suitable for packaging applications are those resinous block copolymers that typically contain a greater proportion of styrene than butadiene and that are predominantly polymodal with respect to molecular weight distribution. These copolymers, produced by solution polymerization processes using sequential multiple additions of an organolithium initiator, styrene, and butadiene (1, 2), are amorphous in nature and transparent. Compared to other transparent styrenic polymers (e.g., general-purpose polystyrene and styrene–acrylonitrile copolymers), the styrene–butadiene copolymers offer outstanding shatter resistance (3). Physical properties are dependent on molecular weight distribution, styrene:butadiene ratio, and the nature of the block structure. Since all three of these parameters are a function of the polymerization recipe, grades having different properties can be produced: Grades tailored for injection molding (see Injection molding) and for extrusion. (see Extrusion) are commercially available (see Table 1). Current producers are listed in Table 2.

APPLICATIONS

One of the major applications for SB is single-service cups and lids, but a combination of good mechanical and visual properties, low density compared to other transparent

Table 1. Styrene–Butadiene Copolymer Physical Properties

Process	Injection Molding and Extrusion	Injection Molding
Specific gravity	1.01	1.01
Flow rate, condition G, g/10 min	7.5	8.0
Tensile yield strength, psi (MPa)	3700 (26)	4400 (30)
Elongation, %	160	20
Flexural yield strength, psi (MPa)	4900 (34)	6400 (44)
Flexural modulus, psi (MPa)	205,000 (1413)	215,000 (1483)
Hardness, shore D	75	75
Heat-deflection temperature, 264 psi (1.8 MPa), °F(°C)	163 (73)	170 (77)
Vicat softening point, °F(°C)	188 (87)	200 (93)
Light transmission, %	90	90

polymers, and ease of fabrication by the typical molding and extrusion techniques make styrene–butadiene copolymers a good choice for many packaging applications. These include bottles and jars, hinge boxes (ball-and-socket or integral-living hinges) (see Boxes, rigid plastic), tubs and lids, blisters, medical devices, packaging, and many film applications (see Carded packaging; Films, plastic).

Styrene–butadiene copolymers are often blended with other polymers. If transparency is a requirement, the blending polymer must have a refractive index very near that of the styrene–butadiene copolymer. This includes styrenic polymers such as general-purpose polystyrene (GPPS) (see Polystyrene), styrene–acrylonitrile copolymers (SAN) (see Nitrile polymers), and styrene–methyl methacrylate copolymers (SMMA). GPPS is used extensively as a blending polymer for applications requiring sheet extrusion and thermoforming (see Thermoforming) (e.g., carded packaging). Blends with SAN or SMMA are mainly used for injection molded applications (e.g., hinged boxes, videocassette cases). The impact strength of SBR can be either enhanced or reduced when blended with other styrenic polymers. For example, a significant loss of impact strength occurs with the addition of even low levels of GPPS. In contrast, certain blends of SBR and SMMA have synergistic impact strength. Therefore, the suitable blend ratio for a given application depends on the required combination of stiffness, toughness, and economics. Blend ratios typically range from 40:60 to 80:20 SB: styrenic polymer. If clarity is not a requirement, blends with polymers such as high-impact polystyrene (HIPS), polypropylene (PP), and polycarbonate (PC) can provide synergistic enhancement of certain physical properties, unusual aesthetics such as gloss and pearlescence, or reduced cost. Bottles and jars can be produced from nonblended SB by extrusion or injection blow molding (see Blow molding). Blown and cast films can be produced from nonblended SBR or blends of SBR/GPPS.

Table 2. Producers of Styrene–Butadiene Resinous Copolymers

Company	Location	Tradename
Chevron Phillips	United States	K-Resin
BASF	Germany	Styrolux
Denka-Kaguku	Japan	Clearene
Total Petrochemicals	Belgium	Finaclear

SPECIFICATIONS

Some U.S.-produced styrene–butadiene resinous copolymers meet FDA specifications (CFR 177.1640). Finaclear complies with European 89/109/EC and FDA requirements (4) Styroflex also has FDA food clearance. Certain grades are fully documented to qualify for U.S. Pharmacopoeia Class VI-50 medical applications and blood contact uses, and they have been shown to be nonmutagenic, nonirritants to sensitive tissues, and nondestructive to living cells. In view of these qualifications and because they can be sterilized by both gamma irradiation and ethylene oxide (ETO) procedures, these copolymers are widely used in medical packaging applications.

TOXICITY

Most significant environmental issues with respect to styrene–butadiene copolymers relate to the manufactuirng process, taste and odor issues in end-use, and solid waste in final disposal of these polymers. Manufacturing process issues relate to industrial hygiene, exposure, and volatile organic emissions. In end-use, block copolyer/polystyrene blends tend to have taste and odor issues, especially sensitive in food packaging applications (5). As with most hydrocarbon-based polymers, SBs burn under the right conditions of heat and oxygen supply. Combustion products of any hydrocarbon based material should be considered toxic.

BIBLIOGRAPHY

D. L. Hartsock, “Styrene–Butadiene Copolymers” in *The Wiley Encyclopedia of Packaging,* 2nd edition, John Wiley & Sons, New York, 1997, pp. 863–864.

Cited Publications

1. A. G. Kitchen and F. J. Szalla, U.S. Patent 3,639,517 (to Phillips Petroleum Company), February 1, 1972.
2. A. G. Kitchen, U.S. Patent 4,091,053 (to Phillips Petroleum Company), May 23, 1978.
3. L. M. Fodor, A. G. Kitchen, and C. C. Baird, “K-Resin BDS Polymer: A New Clear Impact-Resistant Polystyrene in *New Industrial Polymers, ACS Symposium Series 4*, D. Deanin, ed., American Chemical Society, Washington, DC, 1972, pp. 37–48.
4. *Finaclear 521-SBC Technical Data Sheet,* Total Petrochemicals, Belgium, www.totalpetrochemicals.com, accessed July 2008.

5. M. Demirors, "Styrene–Butadiene Copolymers" in *The Encyclopedia of Polymer Science and Technology*, John Wiley & Hoboken, NJ, 2001.

SUPPLY CHAIN ENGINEERING

H. H. SCHUENEMAN
San Jose State University,
San Jose, California

The globalization of the world economy started in earnest in the last half of the 20th Century and has had profound effects on the distribution of the world's goods. In particular, most manufacturing has exited technologically advanced countries, largely in the West, and has relocated to countries with large pools of inexpensive labor. Most of these countries were physically removed up to half a world away from the primary markets for the goods they were now producing. To make this situation viable, efficient logistics, distribution, shipment, and supply chain management are absolutely essential.

To understand the situation better, it is helpful to define the primary terms, including packaging, logistics, and supply chain management.

Packaging, in the context used here, implies a protective device designed and tested to provide physical protection, containment, identification of the contents, and utility during the distribution and storage process. Physical protection is provided primarily by cushion materials to prevent damage from impact and vibration, which are common during distribution, and polymeric films for moisture and dust protection. For containment, corrugated containers provide an inexpensive method to contain the product and its associated pieces and parts. The same container or box easily can be printed to provide the identification of the contents in both readable format and scannable or machine-read format. The same shipping container also provides utility primarily in the means to stack the product on pallets or in warehouses without product damage.

It must also be recognized that the product and package system must work together to survive the often harsh and harmful elements of the physical distribution environment. This cooperation is a natural outcome of the systems approach for efficient and safe product protection during delivery. The concept holds that it may be much more feasible, from a cost standpoint, to ruggedize a product than to design and purchase an overly expensive package system to protect a physically weak product. Often, the cost trade-off of these two options favors product ruggedization over expensive protective packaging. Remember also that packaging is an expense and rarely adds to the value of the product as it is normally discarded after safe product delivery. When the product/package systems approach is used effectively, delivered cost is normally minimized and customer satisfaction is normally maximized.

Logistics defines the entire process of materials and products moving into, through, and out of the firm. This process is often broken down into inbound logistics, materials management, and physical distribution

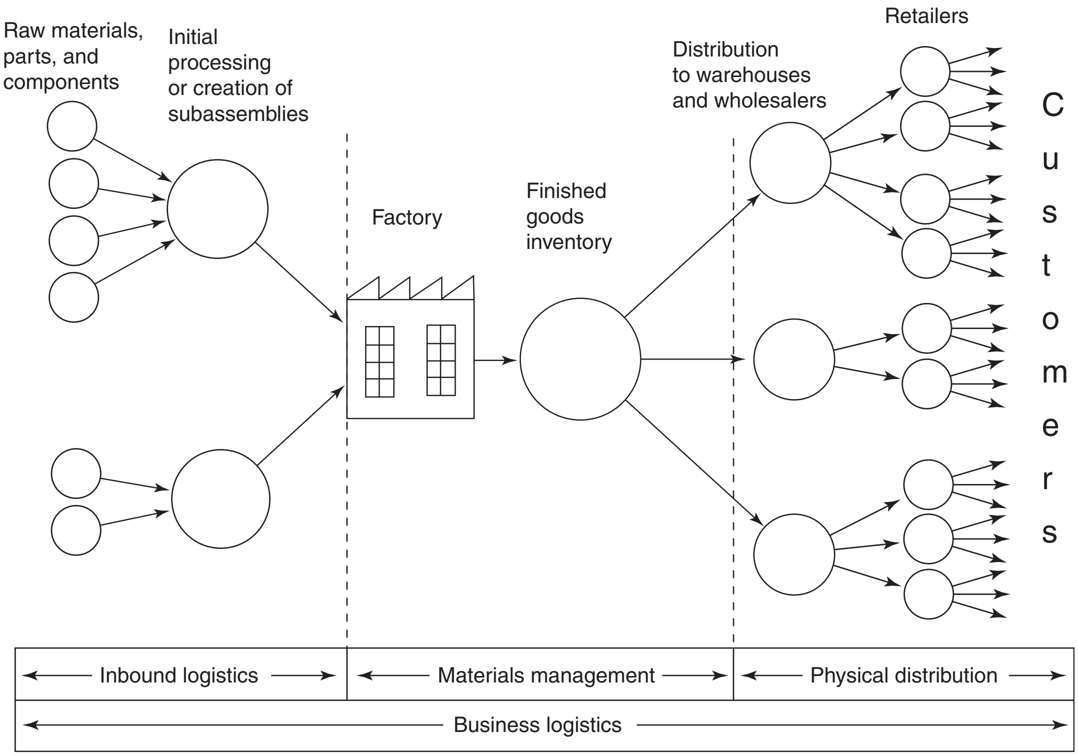

Figure 1. Typical logistics concept diagram. Source: (1) *Contemporary Logistics*.

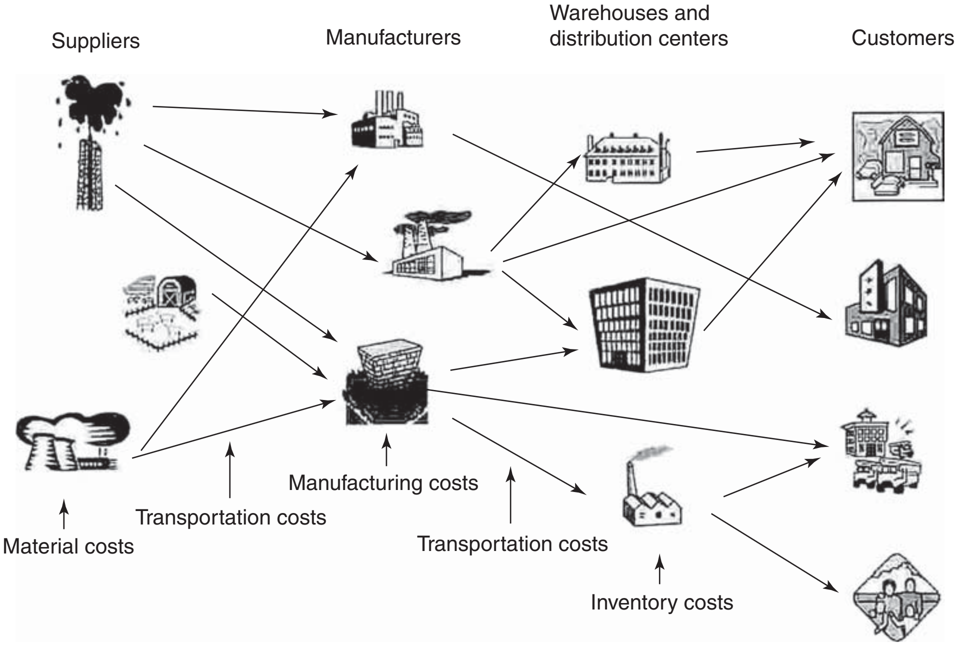

Figure 2. Typical SCM concept diagram. Source: (2): *Designing & Managing the Supply Chain*.

(see Figure 1). The Council of Logistics Management (CLM) defines logistics as "a process of planning, implementing, and controlling the efficient, effective flow and storage of goods, services, and related information from the point of origin to the point of consumption for the purpose of conforming to customer requirements." The word *logistics* was first associated with the military and is attributed to Major Chauncey B. Baker, who described it as "the art of war pertaining to the movement and supply of armies."

Most authors today believe that logistics is a much broader concept that includes functions such as demand forecasting, documentation flow, interplant movements, inventory management, order management and processing, packaging, production scheduling, purchasing, traffic management, and recycling. A popular concept in logistics management occurred in the 1980s with the introduction of just-in-time (JIT) delivery. This concept held that total cost could be minimized by reducing the size of component inventory at the manufacturing location to the absolute minimum, which is typically enough for one shift. Although other costs such as transportation likely would increase because of this concept, total cost could be minimized. Although some manufacturing operations still use this concept, most firms agree that a balanced approach of cost-effective delivery combined with prudent warehousing provides the best overall balance and the least overall costs.

Supply Chain Management (SCM) is a somewhat larger concept than logistics in that it deals with managing both the flow of materials and the relationships among the channel intermediaries from the point of origin of raw materials through to the final customer. In this context, supply chain management is essentially an integration of suppliers, manufacturers, storage facilities, and retail outlets in such a fashion that products are produced and distributed in the right quantities, in the proper locations, at the correct time, to minimize costs while providing maximum customer satisfaction (illustrated in Figure 2).

The concept of supply chain management reached maturity at a rapid rate when the global distribution of goods demanded an efficient system to handle all of the various processes necessary for supplying worldwide markets from distant production sources. The systems approach was the concept that made the whole process work. In times past, the transportation manager would try to minimize transportation costs while the packaging engineer would try to minimize packaging costs and the warehouse supervisor would try to minimize costs by stacking containers higher, for example. The systems approach, by contrast, attempted to look at the total cost of the finished product safely delivered to the customer. Thus, it could be possible for higher transportation costs to result in even greater savings in packaging, which would result in net cost savings to the firm.

WELL-DESIGNED PACKAGING IS THE KEY TO EFFECTIVE LOGISTICS

For both incoming raw materials and outgoing finished products, the key to effective logistics is always efficient cube use during transportation and warehousing. In the globalized economy, long-distance shipping is commonplace. This shipping often uses ocean-going containers or similar structures with defined interior dimensions. Whether or not the distribution cycle uses ships on the ocean, it is very likely that the most efficient manner for shipment is to use as much of the interior cube of the container as possible. For most products and shipping situations, the cube of the container is maximized long before the allowable weight limits are reached. With few exceptions, the cost for shipping a loaded container is normally fixed up to its maximum weight limit. Thus, if 10% more raw materials or finished goods can be placed into a shipping container, the cost for those additional items is essentially free, and thus, the overall transportation efficiency is greatly increased.

Historically, most of the elements of logistics have been well optimized in most distribution cycles. That is to say, if demand forecasting, purchasing, packaging, or production scheduling were improved by 10%, then the results may be gratifying but probably not overly significant cost wise. If, however, delivered transportation costs were lowered by 10% because of more compact product design and packaging, then the results would be both gratifying and significant cost wise.

Recently, the manufacturer of computer peripheral equipment started removing products from pallets and placing them on slip sheets prior to loading them into ocean-going containers. Those customers who demanded products on pallets at the receiving end then would have their products re-palletized at the end of the distribution cycle. This process resulted in an increase of approximately 12% in cube use on ocean-going containers. The cost savings were in the multimillion-dollar range.

For many consumer products distributed globally, the cost of delivery can exceed the cost of the product, sometimes by a factor of two or more. This expense indicates that cost reducing the product by 10%, for example, would not result in substantial savings, whereas increasing distribution efficiency by 10% would result in much more significant cost reductions. A study conducted by a well-known electronics firm concluded that packaging materials made up less than 20% of the total delivery cost for their products. Logistics made up 80% or more (illustrated in Figure 3). It doesn't take a genius to figure out where they spent most of their cost-reduction efforts.

Commercially available software often is used to determine the exact shape and configuration of product/package systems that fit most efficiently and maximize cube use during distribution. Information from these programs can be best used by close cooperation between product design and package design functions. For example, tradeoffs between product ruggedness and package cushion thickness can be easily quantified in terms of delivery cost and, thus, can be weighed against the anticipated cost of the necessary product ruggedization to achieve this efficiency level. Sadly, this type of close cooperation between product and package design functions is the exception rather than the rule.

The bottom line is that smart product/package system design is the key element to cost effective logistics through efficient cube use during storage and distribution.

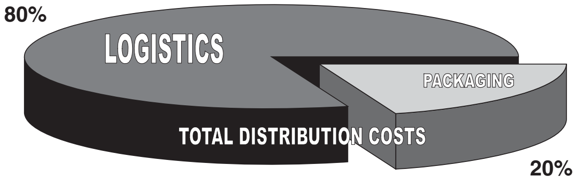

Figure 3. Total distribution cost.

LOGISTICS IS THE KEY ELEMENT IN SUPPLY CHAIN MANAGEMENT

Supply chain management, in all its various forms, always requires the smooth and efficient flow of goods, materials, and information throughout a normally complex network. Goods and materials will always move more efficiently and effectively throughout this process if they are packaged and unitized in a fashion that makes them easy to handle, identify, store, and ship. Unitization by means of pallets is the most popular method, although other unitization methods such as slip sheets and clamp loads are gaining popularity.

The important point is that good logistics will enhance supply chain management, and some authors even suggest that good logistics makes supply chain management actually work. However, poor logistics or even insufficient attention to logistic requirements in the supply chain will cause disruptions and inefficiencies that may lead to total abandonment of the supply chain concept. The more globalized companies' operations are, the more dependent they are on efficient logistics to make supply chain management a viable concept. All of these factors are a recognition of the fact that transportation and distribution costs are a very high percentage of the total cost of producing a product. This issue was not the case a generation ago but is certainly very true today. The near future promises more of the same as companies strive to take advantage of cost-effective production in more remote parts of the world. As these production sites become more and more remote, the critical value of good packaging, logistics, and supply chain management becomes more apparent.

PRODUCT/PACKAGE SYNERGY

At this point, it is clear that logistics is the key element in good supply chain management and that packaging is the key element in good logistics. Thus, it would seem that the global distribution of goods is highly dependent on efficient and effective (smart) packaging. As is often the case, packaging is one of the last elements to be recognized as important or crucial in this area. But the simple fact remains that, without smart packaging, the global distribution of goods, and therefore, our current lifestyle would be impossible.

Typical elements that go into a product design focus would include things like product aesthetics, safety, functionality, weight, dimensions, materials, and many other considerations. Rarely, if ever, is the idea upheld that efficient distribution is one of the key elements in a successful design for globally distributed products. However, the lessons of global logistics tell us that the transportation and storage costs may be the largest cost item in the entire product. What product designer in his or her right mind would ever consider designing a product without paying close attention to the largest cost item in the product? Yet, that is almost exactly what happens over and over again when the cost of distribution is ignored.

Several forward-thinking companies have examined this topic and have determined that efficient product distribution is one of the primary determinants of the actual product dimensions. If changing the dimensions of a product by a relatively small amount will yield a potentially large savings in distribution costs, then smart companies change product dimensions and use the savings to help increase their competitive advantage. The companies that ignore this—simple, but vital—principle are doomed to higher costs and competitive disadvantage throughout the entire lifecycle of the product. In addition, this spiral will only increase in intensity as fuel costs increase because of scarcity, and distribution cycles get longer because of more remote production facilities. It is important for companies to determine the most optimal and efficient dimensions of the product and package system together before the product is even conceived.

In conclusion, it has been shown that product and package synergy is the best possible method to enhance logistics in the distribution of goods and materials, primarily through optimum cube utilization. This process, in turn, results in the greatest efficiency available through focus on supply chain management throughout the distribution cycle. Because distribution costs can constitute a major overall cost of the product itself, this approach will result in the minimization of cost and in the maximization of efficiency simultaneously. Anyone responsible for efficient product distribution should pay close attention to this relatively simple message; optimize packaging and product/package synergy first. Efficient logistics and effective supply chain management will result.

BIBLIOGRAPHY

J. C. Johnson, D. F. Wood, D. Wardlow, and P. R. Murphy Jr., *Contemporary Logistics*, 7th edition, Prentice-Hall, Inc., New York, 1999.

D. Simchi-Levi, Kaminsky, and E. Simchi-Levi, *Designing & Managing the Supply Chain*, 2nd edition, McGraw-Hill Higher Education, New York, 2003.

Marcondes and Schueneman, *Packaging Dynamics in a Global Economy*, unpublished manuscript, 2004.

SUPPLY/DEMAND CHAIN MANAGEMENT

Chris Dominic
STFI-Packforsk AB, Lund
University, Packaging Logistics,
Stockholm, Sweden

SUPPLY/DEMAND CHAIN MANAGEMENT

Emergent structures in Supply/Demand Chain Management (SDCM) are the interaction of logistics activities leading to material flow, thereby satisfying the consumer's demand. The logistics area is rapidly developing to create individualized value for the consumer as well as a sustainable growth for the actors involved in the Supply/Demand Chain. Ericsson in Waters (1) maintains that creating customer value has been discussed ever since the 1940s, but distribution channels are often organized by supply activities that have resulted in supply push rather then demand pull. Development in this area has improved with the implantation of new technologies that have provided the actors with real-time information that has resulted in enhanced competitiveness. The use of the information and communication technology (ICT) has increased the awareness of the need to satisfy the consumers' specific requirements. This development can be also seen in the packaging area. Packaging is assumed to have a major influence on logistics in general and on physical distribution in particular. The packaging plays an active role in protecting and creating value from when it is filled at the packer/filler* until the product is emptied by the end-user. This in logistics terms means that the actors involved in packaging must play an important and proactive part in maintaining efficiency in logistics.

The key elements applied in Supply/Demand Chain (2) are Packaging Logistics and e-logistics. For each of these constitutive elements, the current theoretical foundation is described below.

The work is done to bridge the theoretical gaps in Supply/Demand Chain Management. The theories discussed here are based on the material flow in the distribution channels as well as on the actor's point of view.

CONCEPTS APPLIED IN LOGISTICS

Logistics can be an array of activities generating a physical flow of supplies from the refiners of material through to the packaging supplier, the packer/filler, and distributor and all the way to the end-users (i.e., consumers). Postconsumption and reverse logistics activities are also considered. The logistics activities are driven by aggregated demands generated by the consumers. The demands (end-user information) flow in a direction opposite to the physical flow. Frohlich and Westbrook (3) have divided the concept of integration into the integration of supply and demand. The demand data from the consumer is the driving force for planning, production, packing/filling, distribution, storing, and sales. Also, post-sales activities regarding packaging are also included here.

DISTRIBUTION CHANNEL

The distribution channel is undergoing changes; new techniques (e.g., e-business) have an influence on the design of packaging (4). The development toward controlling the customers' inventory solutions are growing. The concept of Vendor Managed Inventory (VMI) is used to integrate a cross-functional process by allowing, for

---

* A company that takes empty packaging and then packs or fills it with products.

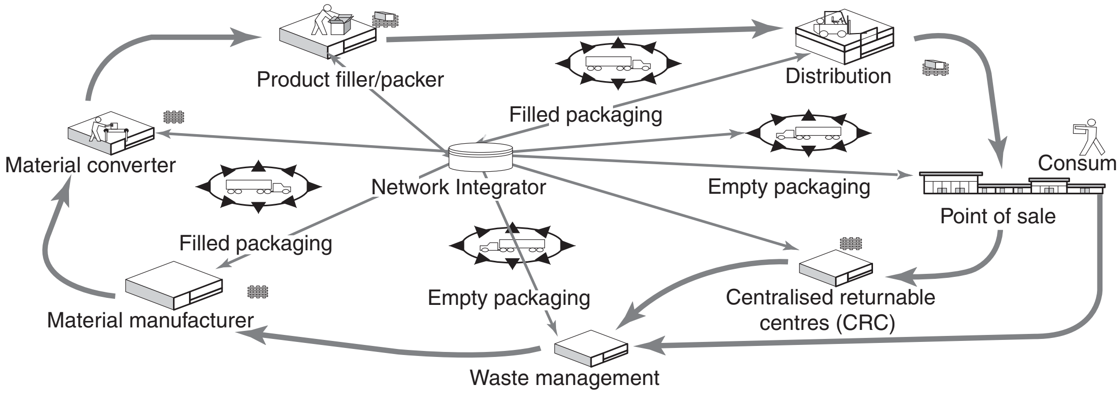

Figure 1. Activities in packaging logistics.

example, the packaging suppliers to own that part of the process that has traditionally belonged to the customer. Many authors [e.g., Waller et al. ((5), p. 186)] stress that VMI can lead to better planning and help to bridge the information gaps and contribute to forward integration with the actors in the distribution channels. These developments can also be seen in the packaging area where the packaging actor is using, for example, Shelf-Ready Packaging (SRP) and Retail-Ready Packaging (RRP) concepts presented by ECR Europe (6). According to Greaver (7), there is an increasing amount of subcontractors who deliver certain functions, services, or parts of the production process externally, instead of the company carrying out these tasks internally. Dominic (8) has identified packing services, storage, and distribution as examples of services with which some major packaging suppliers are familiar and that have served as natural links in the distribution channel.

For backward integration, many actors have started to look into the theories of reverse logistics (9), which is a physical flow moving in the most efficient and cost-effective way possible. In an ideal world, the logistics flow goes in the direction towards the consumer. However, as the world we work in is not ideal, packages often have to move against the stream in the flow.

Processes related to these activities, which companies have contracted to carry out, are often regarded as unwanted and resource demanding. Here the greatest problem is the lack of good information systems capable of handling the reverse logistics functions.

PACKAGING LOGISTICS

The subject of Packaging Logistics is defined as an approach with the purpose of developing packaging and packaging systems[†] that support the logistics process and meet customer demands. In logistics, a well-functioning packaging system creates time, place, form, and ownership benefits in the product in relation to the customer—that is, an undamaged product in an easy-to-handle package which is easily disposed of. Figure 1 illustrates packaging logistics activities and the actors involved. Dominic (8) has identified the actor Network Integrator (plotted in the middle), who plays the role in integrating the supply flow and with the demand flow.

Packaging systems can be either one-way or reusable. Reusable packaging is collected at a centralized return handling central (CRC), where it is cleaned, stocked, and distributed for refilling. The used packaging is shipped for waste management.

THE PACKAGING AND THE ACTOR

A package should be designed to provide optimal efficiency in storage, sales, and subsequent waste management. Good packaging affects material, handling in terms of load stability, stackability, and compatibility with different forms of mechanization and automation. The choice of a packaging system is a complicated task, and it should be based on market considerations, actors involved in the process logistics, and environmental requirements. Small changes in a packaging system affect the distribution channel in many different ways. In general, the following factors are involved (10, 11): product protection, available packaging technology and functionality, economics and costs, marketing considerations, product properties, environmental considerations, legal constraints, and information transfer. Normally, the package properties are adapted to the product, but sometimes the product properties are modified in order to facilitate more practical packing/filling. Packaging is also important for shippers and for materials managers who are closely tied to functions dealing with warehouse and transportation efficiency. Good packaging can have a positive impact on layout and design and overall warehouse productivity. With the need for a holistic approach and a trend toward longer and more complex Supply/Demand Chain, a method called Packaging Scorecard (PSC) (12) is introduced in Packaging Logistics. PSC helps to evaluate the performance of the packaging system in the SDC and to reduce packaging waste. Lately, the concepts of PSC are widely used by the distributor and in retail.

The role of a packaging supplier in logistics is often limited to interaction with the packer/filler in the distribution channel. The nearest interface for the packaging

---

[†] The packaging system is based on four identified levels: primary, secondary, tertiary, and load carrier.

supplier in the distribution channel is with the packer/filler. Today, packaging suppliers are challenged to develop solutions aimed at both commercial and logistical upgrading throughout the flow. The packaging suppliers should aim at looking beyond the immediate users of packaging (8). They have to anticipate and integrate the specific demands of subsequent distribution phases such as retail and logistics management through to the consumer. They also have to minimize the use of hazardous substances and ensure the environment-friendly disposal of the packaging after use.

e-LOGISTICS

According to Ericsson (13) e-logistics has been the natural development in the subject of logistics in the past few years. Information and Communication Technology (ICT) is one of the legs of e-logistics which bridges the interorganizational gaps. The second leg is traditional logistics comprising material management, warehousing, transport, and Just-In-Time theories. Business processes is the third leg, where the actors in logistics play an important part in creating efficiency in the distribution channel.

Together with ICT, packaging can play an active part in e-logistics by integrating the three legs. By increasing knowledge in packaging logistics and adapting to new technologies, the actors in packaging can increase logistics efficiency and add value for their customers.

DISCUSSIONS

During the 1990s the Supply Chain Management concept noticeably started to spread broadly. The physical flow in a Supply Chain (SC) composed of a number of companies, buyers, and sellers, who communicate directly with the nearest actor is forward for sales and backward for purchases. The relations often consist of finding a partner who can offer the right product price and, in an established cooperation, share information about logistics issues including stock levels, delivery, and product development issues. The relations are based on the creation of contact between two individuals, namely, a seller and a buyer.

Information about consumer requirements passes from the point of sale via the distribution to the packer/filler and then to the packaging supplier. This puts an emphasis on relevant information being brought from the packer/filler to the packaging producers. The process is further complicated when several enterprises are involved in the flow. Betts and Heinrich (14) give an example of how "ICT-fication" can be used to create adaptations. ICT-fication means that electronic aids give access to the customer's and sometimes the flow's database and consumer demands.

The development in ICT-fication has reorganized the distribution channels, which are becoming increasingly nonstatic in order for companies to gain a competitive edge. Instead of developing specialized departments in companies, one could outsource the value-creating activities and focus on the core business. The basis of Supply Chain Management is to command and have control over value-creating activities. According to Ericsson (13), Supply Chain (SC) is a supply push construction rather than a construction driven by demand-pull conditions. In traditional SC, the focus is on the physical flow resources. ICT is used as a tool for the individual companies to help them fulfill their tasks, and non-interorganizational functions will lead to inefficiencies. For example, a package moving from the supplier of packaging to the packer/filler and then to the point of sale involves arms-length transactions, leaving gaps between the actors involved in the distribution channel. When there are many competing, parallel distribution channels, the system will become demand-driven, which should not be mistaken for a demand chain (DC). A DC is largely about managing the information flow. The driving force is information rather than the actual physical flow. The goal is to substitute the information for inventory among the actors involved in the flow. Here, as mentioned above, a new actor called Network Integrator (8) enters the marketplace with the function of integrating the information flow and the physical flow. This development can be adapted to packaging theory by introducing packaging integration, and the actor involved is the Packaging Integrator.

BRIDGING THE GAPS IN LOGISTICS THEORIES

In this article, the concepts of packaging logistics and e-logistics create an interesting logical element for creating efficiency in logistics. The theory of Supply/Demand Chain Management is supporting the concept of demand-pull. There is relatively modest research supporting the packaging suppliers' roles in the logistics. But the work done in the field of Supply/Demand Chain Management adds the theory of Packaging Logistics as an important element that will create efficiency in logistics.

In conclusion, this work looks for answers in the literature to the questions of how the packaging suppliers can contribute in logistics to create efficiency and how the theoretical discussion about Network Integration can contribute to develop the logistics theory.

BIBLIOGRAPHY

1. D. Waters, *Supply Global Logistics and Distribution Planning: Strategies for Management*, Kogan Page, London, 2003.
2. C. Dominic, "Integrating Packaging Suppliers into the Supply/Demand Chain," *Packag. Technol. Sci.* **18**, 151–160, 2005, DOI: 10.1002/pts.684.
3. M. T. Frohlich and R. Westbrook, "Demand Chain Management in Manufacturing and Services: Web-Based Integration, Drivers and Performance," *J. Oper. Manag.* **20**(6), November 2002, pp. 729–745(17).
4. P. Schary and T. Skjott-Larsen, *Managing the Global Supply Chain*, Handelshojskolens Forlag, Köpenhamn, 2001.
5. M. Waller, M. Eric Johnson, and T. Davis, "Vendor-Managed Inventory in the Retail Supply Chain," *J. Bus. Logist.* **20**(1), 183–203 (1999).

6. X. Hua and B. Fradin, Shelf Ready Packaging (Retail Ready Packaging), www.ecrnet.org/04-publications/blue_books/srp/ecreurope_srp_bluebook_executive_summary.pdf (read 2008-02-20).
7. M. Greaver, *Strategic Outsourcing: A Structured Approach to Outsourcing Decisions and Initiatives*, AMACOM, New York, 1999.
8. C. Dominic, *Packaging Networks—a framework for Integrating packaging Suppliers in the Demand Chain*, Studentlitteratur, Lund, 2006, pp. 13–21.
9. D. Rogers and R. Tibben-Lembke, *Going Backwards: Reverse Logistics Trends and Practices*, RLEC Press, Pittsburgh, PA, 1999.
10. C. Dominic, K. Johansson, A. Lorentzon, C. Olsmats, L. Tiliander, and Weström, P. *Förpackningslogistik — 2: A Utgåvan*, Packforsk, Kista, 2000.
11. D. M. Lambert, M. C. Cooper, and J. D. Pagh, Supply Chain Management: Implementation Issues and Research Opportunities, *Int. J. Logist. Manag.* **9**(2), 1–19 (1998).
12. C. Dominic and C. Olsmats, Packaging Scorecard – A Method to Evaluate Packaging Contribution in the Supply Chain, Packforsk research report No 200, Kista. ISSN 1402-5809.
13. D. Ericsson, in C.D.J. Waters, ed., *Supply/Demand Chain Management—the Next Frontier for Competitiveness in Global Logistics and Distribution Planning*, Kogan Page, London, 2003.
14. B. Betts and C. Heinrich, *Adapt or Die: Turning Your Supply Chain into an Adaptive Business Network*, John Wiley & Sons, New York, 2003.

SUSTAINABLE PACKAGING

ANNE JOHNSON
Sustainable Packaging
Coalition, Charlottesville,
Virginia

INTRODUCTION TO SUSTAINABILITY

Sustainability is a systems concept that is simple common sense. We need a healthy planet to provide resources for our basic needs and to support the needs of our economies. People need robust commerce for employment and require a healthy and productive environment in which to live. Effective economies need healthy employees to work and stable societies in which to operate.

For millennia, our planet has provided the material resources that both societies and business require. We are entering an unprecedented era where the demands of humanity exceed the biocapacity of the planet, and in a short hundred years we have depleted finite geological oil resources on which we have grown to depend. Through the mounting evidence in the form of global changes like climate change, we are receiving clear signals that the cumulative impacts of mankind are leaving a swath of unintended environmental consequences. Our current industrial and consumptive practices are leaving a tragic legacy of degraded and limited resources for future generations.

In 1987, the UN World Commission on Environment and Development issued a report entitled *Our Common Future* that established a definition for sustainable development. This definition is commonly used for what is now referred to as simply sustainability: “Development that meets the needs of the present without compromising the ability of future generations to meet their own needs.” (1) The principles elucidated in this statement strive to balance the demands of society and the production of goods and services with consideration for the environment.

In 2007, it is clear that sustainability is hitting the mainstream. For 15 years or more, a handful of leading CEOs and companies have recognized the leading indicators of a shifting business climate and started to consider how the future might impact their businesses. To these companies, many of whom are global brands, the concepts implicit in the term “sustainable development” have taken on greater meaning and bottom-line significance as sustainability has attracted widespread consideration.

Globalization, demand for accountability and transparency, rising energy prices, and escalating environmental degradation are just some of the issues driving interest in sustainability on the part of business and advocacy groups. With the entrance of Wal-Mart into the arena in 2005, along with the announcement of the company’s sustainable packaging initiative, sustainability is currently impacting almost all businesses in the packaging value chain.

While packaging is often not the overwhelming contributor to an environmental footprint compared to a product, it does have a uniquely personal relationship to consumers. When the product is gone, consumers are often left with the packaging and need to figure out what to do with it. For this reason, along with the fact that it represents a significant use of materials and resources, places a burden on communities, and is a very visible source of waste or litter, packaging ranks high on corporate sustainability agendas.

It is clear that careful stewardship of the planet and its resources are essential for a sustainable future for society and business. Sustainability represents a tremendous design opportunity—that is, to design chemicals, materials, products, buildings, cities, transportation, and packaging systems that contribute meaningfully to a positive, sustainable future.

One of the sustainability frameworks that has proved valuable for envisioning sustainable material systems is the language of cradle to cradle design found in the book *Cradle to Cradle: Remaking the Way We Make Things* by William McDonough and Michael Braungart (2). In *Cradle to Cradle*, McDonough and Braungart ask us to imagine industrial systems modeled on the effectiveness of natural ecosystems. Cradle-to-cradle design envisions a world powered by the sun where growth is good, waste is nutritious, and productive diversity enriches human and natural communities.

The application of cradle-to-cradle design creates an opportunity to cycle industrial materials in a sustainable way. Each material in a product is designed to be safe and effective, as well as to provide quality resources for subsequent generations of products. Like the earth's nutrient cycles, the flow of materials eliminates the concept of waste.

THE DEFINITION OF SUSTAINABLE PACKAGING

A formal definition of sustainable packaging is needed to provide a common platform of understanding against which the packaging supply chain can measure their efforts. This was the objective of articulating the "Definition of Sustainable Packaging," released in October 2005 by the Sustainable Packaging Coalition. The Sustainable Packaging Coalition, a project of GreenBlue, is an industry working group dedicated to creating a more robust environmental vision of packaging. Drawing on fundamental eco-efficiency concepts and sustainability principles articulated by cradle to cradle, the definition outlines a framework for sustainability in the context of packaging and its related materials systems.

Encompassing the entire life cycle of packaging and more, the definition presents a vision for the packaging industry in eight criteria—all of which must be addressed if sustainable packaging is to become a reality. The definition is ambitious and comprehensive. It presents a challenge to the *status quo* while offering guidance to identify opportunities and strategies to move forward.

Sustainable packaging (3) has the following characteristics:

A. It is beneficial, safe, and healthy for individuals and communities throughout its life cycle.
B. It meets market criteria for performance and cost.
C. It is sourced, manufactured, transported, and recycled using renewable energy.
D. It maximizes the use of renewable or recycled source materials.
E. It is manufactured using clean production technologies and best practices.
F. It is made from materials healthy in all probable end-of-life scenarios.
G. It is physically designed to optimize materials and energy.
H. It is effectively recovered and utilized in biological and/or industrial cradle to cradle cycles.

A. Beneficial, Safe, and Healthy for Individuals and Communities Throughout Its Life Cycle

In addition to profitability, social equity and the environment are growing areas of corporate focus. As part of globalization, companies are expanding operations and increasingly are held accountable for actions resulting in negative social or environmental consequences. The emergence of the corporate social responsibility reporting reflects the growing focus on corporate citizenship, accountability, and transparency.

The global packaging industry is conservatively estimated at $417 billion and employs more than five million people all over the world (4). The benefits of packaging to individuals and communities vary from (a) the creation of meaningful, stable employment to (b) the protection, preservation, safety, and transport of products and foodstuffs. Packaging allows key marketing and product differentiation and educates and informs the consumer. At the same time, the procurement, production, transport, and disposal of packaging can have negative consequences for both the environment and societies around the globe. Through intelligent packaging and system design, it is possible to "design out" the potential negative impact of packaging on the environment and societies.

Cradle-to-cradle principles offer strategies to improve the material health of packaging and close the loop on packaging materials, including the creation of economically viable recovery systems that effectively eliminate waste. These strategies support communities through the creation of gainful employment and improvements to the environment. Corporate social responsibility, accountability, and equitable wages are all part of creating a sustainable system.

B. Meets Market Criteria for Performance and Cost

Economic growth and prosperity are essential components of sustainable development. The United Nations estimates that the population of the planet will grow from 6.4 billion in 2005 to 9.0 billion by 2050, roughly a 40% increase in global population (5). An efficient and productive industry engaged in truly sustainable practices is essential to meet the increasing demand for goods and resources that this growth implies. Historically, increased packaging use has accompanied economic growth. A goal of sustainable packaging is to facilitate economic growth by delivering benefits of packaging without the negative impacts associated with traditional packaging designs.

Ongoing profitability is a fundamental element of sustainable business practice. Managing the cost of packaging procurement, production, and product delivery with the desired functionality and appearance is fundamental to a profitable business. The true cost of packaging is becoming more complicated as costs that have traditionally been borne by society (e.g., disposal) are being redirected to producers through legislation and levies. Sustainable packaging design considers the full life cycle of the package, recognizes the principle of Shared Product Responsibility (6), and consequently seeks to minimize the total packaging system cost through efficient and safe package life cycle design.

Sustainable packaging initiatives offer multiple strategies to meet and even exceed market criteria for performance and cost, including improved package design, resource optimization, enhanced material selection, and source reduction (7). Education of business colleagues, suppliers, consumers, and regulators is also an important vehicle to connect a sustainable packaging strategy to existing market needs.

Collaboration across the packaging supply chain facilitates understanding, helps identify opportunities to improve materials and packaging systems, and enables sustainable alternatives to be developed with zero or little additional cost. Experience from other sectors that are beginning to embrace the principles of sustainable business indicates that improvements in product quality and profitability are often realized. Other benefits of sustainable packaging include (a) brand enhancement and new sources of materials made available through reuse and (b) mechanical and chemical recycling.

Innovative new packaging materials from renewable resources and advances in recovery/recycling systems, while still on the horizon for many materials, are actively being used in other parts of the world. While there may be costs associated with the transition to new packaging materials or recovery strategies, there also will be savings. Experience has shown that some of these direct savings could include reduced regulatory and tipping fees and reduced environmental management costs.

C. Sourced, Manufactured, Transported, and Recycled Using Renewable Energy

The wide-scale use of fossil fuels as the primary source of energy is the principal factor contributing to many local, regional, and global pollution issues including climate change, acidification, ozone depletion, mercury buildup, photochemical ozone, and particulates. Renewable energy potentially offers a solution to many of the environmental, social, and economic issues central to the development of a sustainable world. The most common types of renewable energy include solar energy (passive and active), wind power, hydroelectric energy, biomass (biofuels and biopower) energy, tidal energy, and geothermal energy.

Today most packaging materials and conversion processes rely on fossil fuel-based energy to a greater or lesser extent. The transition from fossil fuels to renewable energy throughout the packaging supply chain will require changes at many levels over a significant timeline. It is not possible, in the short to medium term, to migrate all materials and processes to renewable energy sources; the limiting step will be the availability of an economic and sustainable supply of renewable energy.

Companies are beginning to address the need to shift to renewable energy through a variety of strategies. In the near term, making fossil fuel-based systems as efficient as possible is an effective strategy for moving toward sustainability with very real economic and environmental return. At the same time, there must be a dedicated effort to diversify the energy mix and build momentum behind the transition to renewable energy sources. This transition is being encouraged through the direct investment or purchase of renewable energy, through carbon credits, or through tradable renewable allowances (RECS).

Transportation is a significant source of fossil fuel consumption associated with packaging. Companies experience direct cost benefit from improving fleet performance through optimized distribution or better fuel efficiency. Companies are also encouraging the use of bio-based fuels, hybrid vehicles, and other innovative technologies through internal measures or by acknowledging the efforts of suppliers. These types of activities help develop markets for renewable energy and offer alternatives to fossil fuel as strategies toward a more sustainable energy future.

D. Maximizes the Use of Renewable or Recycled Source Materials

The use of renewable or recycled materials can contribute to the creation of sustainable material flows and thus provide materials for future generations. Using recycled materials (renewable or nonrenewable) encourages waste reduction and the conservation of resources. The use of renewable materials reduces dependence on nonrenewable resources, uses current solar income to create raw materials (greenhouse gas neutral), and encourages sustainable management of resources.

The use of renewable or recycled materials supports the development of sustainable packaging by improving its environmental profile and providing a source of future packaging materials. Yet the physical deterioration of some materials through mechanical reprocessing (i.e., recycling) currently poses a limit to effective and economic reutilization of some packaging materials. Under cradle-to-cradle principles, materials should be recovered through either biological or industrial cycles or both. Many renewable or bio-based materials are suitable for recovery through either mechanism. Materials from nonrenewable resources should be recycled. Since the value of these materials cannot be recovered by natural processes, it requires a high degree of stewardship throughout their life cycle to ensure that they are recovered and reused.

Specifiers and designers striving for sustainable packaging should ensure the recyclability of materials, especially if they are made from nonrenewable resources. Environmentally preferable procurement and prescriptive regulations regarding the environmental characteristics of packaging are expanding and often incorporate recyclability (8) and recycled content requirements.

A key strategy for improving the sustainability of packaging is maximizing the use of renewable and recycled materials. The availability, performance, and price of some renewable or recycled materials affect the feasibility of incorporating them into new packaging designs. Material and technological advances that positively influence these factors for renewable and recycled materials can substantially improve the practicality of their use.

The sourcing of recycled materials is closely linked to end-of-life issues. From experience to date, it is clear that demand for recycled materials and the creation of market pull is a key driver for strengthening the recovery and recycling industry needed to provide them.

Encouraging the use of sustainable management practices through credible certification systems is an essential component of specifying renewable materials and an increasingly common strategy to address concerns associated with the production of virgin bio-based packaging materials. This tactic is used currently to address forestry and agricultural practices. While there is some focus on the sourcing of nonrenewable resources through clean production, there is not a comparable set of well-accepted sustainability practices or certifications directed toward sourcing nonrenewable resources. Because the extraction of both petroleum and mineral resources has great impact, steps need to be taken to address the sourcing of these materials.

E. Manufactured Using Clean Production Technologies and Best Practices

Clean production refers to the continuous application of an integrated environmental strategy to increase overall efficiency and reduce risks to human health and the environment. This includes conserving raw materials, water, and energy, eliminating toxic and dangerous raw materials, and reducing the quantity and toxicity of all emissions and waste at source during production processes (9).

Clean production represents environmentally responsible practice and applies to any industrial activity, including the production of packaging. Packaging uses significant quantities of energy, water, and materials in manufacturing and production processes. Clean production seeks to reduce and ultimately eliminate the environmental impact of any emissions and toxins emerging from these production processes.

Eco-efficiency strategies are currently pursued to minimize emissions, energy use, and waste. Some examples include voluntary emission reduction or elimination programs and the use of cleaner technologies.

Encouraging companies and suppliers to ensure that their production processes meet clean production best practice standards and support responsible manufacturing, worker safety, and sustainable packaging can ultimately reduce costs, thereby improving quality and long-term profitability.

New approaches and technologies are on the horizon. Advances are being made on closed-loop systems and beneficial reuse to eliminate wastes. Green Chemistry (10) and Green Engineering (11, 12) represent encouraging signs that the technical and scientific intelligence that created the technological transformation of the 20th century is now being directed toward solutions to unintended consequences.

F. Made from Materials Healthy in All Probable End-of-Life Scenarios

Human and ecological health is a basic requirement of sustainable development. Material health is a cradle-to-cradle principle that addresses the use, presence, and release of harmful substances to the environment. The accumulation of problematic substances in the biosphere and in our bodies is the subject of increasing concern for consumers, health professionals, and governments.

Packaging may contain certain chemicals that result in the unintended release of harmful substances during the life cycle of the package, particularly at the end of life. While these chemicals are typically utilized in small amounts, the scale and quantity of packaging waste can render them significant. Ensuring all ingredients—including additives, inks, adhesives, and coatings—are safe for human and environmental health throughout their life cycle is a vital aspect of sustainable packaging design.

Careful selection and specification of the safest materials available to meet the package performance requirements is the preferred strategy. Currently, companies continuously monitor materials bans, restricted substances lists, and legislation prohibiting the use of certain substances within packaging. There is also a need for an ongoing dialogue to examine what is in packaging materials and to encourage the optimization of material formulations for human and environmental health. The development of tools and methodologies to assess material health is underway and will allow more transparent communication of material characteristics throughout the value chain.

G. Physically Designed to Optimize Materials and Energy

Seventy percent of the overall impact of a product is determined in the design phase (13). By thinking about the entire life cycle of a product during the design phase and identifying critical aspects, it is possible to anticipate impacts and eliminate problems and waste up front. For this reason, anticipatory design is a fundamental best practice for sustainable products and packaging.

Typically companies design packaging to meet critical cost, performance, and marketing requirements. Sustainable packaging design adds consideration of life cycle impacts including: energy use over the life of the package, impact of materials in end-of-life scenarios, and appropriateness of the design/materials to facilitate material recovery. Other factors that should be considered in the design phase are consumer behavior and the variation of established recovery systems by market.

Several methodologies are currently used to support sustainable design including Design for Environment, Design for Disassembly, and Source Reduction. Corporate strategies to address packaging design include developing sustainable design guidelines and embedding them within product development processes. It is important to note that sometimes the adoption of one design strategy over another may result in tradeoffs. One design may focus on minimizing energy impacts over the life of the package and another may focus on the use of recycled content. Internal corporate sustainability objectives may influence the weighting of specific life cycle impacts and thus influence ultimate internal design strategies. In general, sustainable packaging design calls on designers to weigh these factors against each other and optimize their use as a whole. Standardization and communication of sustainable design strategies and their adoption by the packaging industry will create significant advances toward more sustainable packaging.

H. Effectively Recovered and Utilized in Biological and/or Industrial Cradle-to-Cradle Cycles

Currently, economic expansion and the related growth in resource use are considered to be inconsistent with sustainable development. Creating sustainable flows of materials will reduce the overall use of finite natural resources and minimize waste. Effective recovery means creating the collection and recycling infrastructure necessary to close the loop on materials in order to provide valuable resources for the next generation of production.

The greatest challenge to the development of sustainable packaging is the creation of economically viable and effective systems to collect and recover value from materials. The recovery phase of the packaging life cycle is the recipient of the cumulative impacts of all upstream decisions.

Effective recovery implies the significant collection and recovery of material at the highest value that is economically feasible. As suggested by the discussion under previous criteria, effective recovery can be achieved through supply chain collaboration, by the coordinated efforts of the packaging system to create healthy and recyclable materials, by packaging designed for recovery, and by establishing appropriate collection and recovery infrastructure with the combined support of end users—brand owners, retailers, and consumers.

There are many methods of collecting and recycling packaging materials to recover their intrinsic value to society. In reality, the established recovery infrastructure in the country in which the product is sold/used, together with market dynamics, will ultimately determine the method through which a package will be recovered. Some of the more common recovery methods are discussed below.

Biological Recovery (Managed Composting). The earth's biosphere effectively recovers the nutritive value of basic biological materials. The conditions for effective biological degradation do not exist in landfills and the release of problematic substances is a further concern. It is necessary to engineer and manage biological recovery systems to ensure safe and effective recovery of value from biological materials. Managed composting and anaerobic digestion with energy recovery are examples of managed biological recovery systems; landfills are not.

Technical Recovery (Recycling). Because nature cannot effectively recover many man-made packaging materials, engineered recovery systems are necessary to avoid their accumulation in the environment and to recapture their value. Some examples of technical recovery include mechanical and chemical recycling of plastics and thermal recycling of metals and glass. It is also possible to recover biological materials in technical systems (e.g., paper recycling). The ability to economically recover value varies by material, regional variations in infrastructure and technology, and consumer behavior.

Energy Recovery (14) (Waste to Energy). Energy recovery increasingly is used as a method to recover value from packaging materials. Safe incineration with energy recovery, waste to energy facilities, and the use of plastic and paper as an alternative fuel are all energy recovery methods. These technologies represent conversion of material to energy.

While energy recovery does not represent a sustainable use of nonrenewable packaging materials (e.g., fossil fuel based plastics), it is a preferable interim alternative to landfills, litter, or uncontrolled burning.

For bio-based materials, energy recovery has different implications. Bio-based materials are a preferred alternative to fossil fuels because they are renewable and are considered carbon neutral with respect to climate change. However, they are not without other pollution impacts like particulate or nitrous oxides. The best efforts to meet many of the criteria outlined in this definition (e.g., performance and cost, renewable energy, safe materials, optimally designed packaging) will only result in sustainable packaging if it is collected and recovered. Ideally, materials and recovery options should be introduced at the same time, which requires coordination along the entire value chain.

IMPLEMENTING THE VISION

As they stand now, conventional definitions of design quality are typically limited to cost, technical performance, appearance, and, in certain cases, regulatory compliance. When sustainability is added to the mix, it introduces an expanded set of criteria that may include optimizing resources, responsible sourcing, material health, and resource recovery. This means the ability to design packaging that strives for total life cycle quality. A survey of Sustainable Packaging Coalition members showed that several companies have started to make steps toward sustainability through innovative redesign.

Origins Natural Resources, Inc. (Origins), a subsidiary of The Estée Lauder Companies, Inc., recently created a new line of products in collaboration with integrative health specialist Dr. Andrew Weil. Origins wanted to use this product launch to strengthen the environmental ethic embedded in its mission. The new line consists of 50% post-consumer-recycled-content paperboard, and it is manufactured, printed, and folded using 100% renewable wind energy. Environmental savings include reductions in greenhouse gases and other pollutants associated with coal-powered electrical generation.

Michelman, Inc., a leading coatings manufacturer, developed a polymeric emulsion coating for corrugated boxes that allows them to replace nonrecyclable expanded polystyrene (EPS) boxes typically used for long-term grape storage. These coated boxes are priced comparably to EPS boxes. They offer an end-of-life revenue opportunity for end users through recycling and eliminate the cost associated with the disposal of EPS. In addition, the polymeric emulsion coated boxes replace the use of styrene, the monomer used to make EPS and a known respiratory irritant and possible human carcinogen.

Starbucks Coffee Company set out to redesign its packaging boxes for its line of bite-sized chocolate-covered nuts, espresso beans, dried fruit, and grahams. Although the redesign had aesthetic goals, the Starbucks design team set out to mitigate environmental impacts as well. The company reduced the number of layers and thinned the paperboard used in the packaging. By critically analyzing the package's weaknesses including size, weight, recyclability, number of component parts, and sourcing locations, Starbucks has produced a more effective product. In addition to reducing materials and environmental impact, the new smaller design resulted in costs savings through reduced material input and labor and more efficient transport and storage.

While these and many other companies have taken significant steps to improve their packaging, according to the criteria outlined by the Sustainable Packaging Coalition, currently no packaging can be defined as sustainable. Yet each of these sustainability objectives opens up numerous opportunities for a solutions that improve on existing packaging approaches. This is the challenge for packaging professionals: to continue to innovate, meet, and exceed performance in the new categories of excellence introduced by sustainability. In the new world of sustainable packaging, design is a critically important leverage point.

BIBLIOGRAPHY

1. G. Bruntland, editor, *Our Common Future: The World Commission on Environment and Development*, Oxford University Press, Oxford, 1987.
2. W. McDonough and M. Braungart, *Cradle to Cradle: Remaking the Way We Make Things*. North Point Press, New York, 2002. Cradle-to-cradle design is based on principles of Industrial Ecology and Design for Environment (DfE). Similar to Industrial Ecology, materials and energy flows are conceived as “metabolism”; and like DfE, it proposes that we design with the environment in mind, considering all phases of the product life cycle.
3. No ranking is implied in the order of criteria.
4. PRIMEDIA Business Magazine & Media, Inc. *Global Packaging Market*, February 1, 2003. Online. Paper, Film & Foil Converters. July 22, 2005, http://pffconline.com/mag/paper_global_packaging_market/.
5. Population Division of the Department of Economic and Social Affairs of the United Nations Secretariat. *World Population Prospects: The 2004 Revision and World Urbanization Prospects: The 2003 Revision*, 2005. Online. United Nations, July 22, 2005, http://esa.un.org/unpp.
6. OECD defines Shared Product Responsibility as a voluntary system that ensures responsibility for the environmental effects throughout a product’s life cycle by all those involved in the life cycle. The greatest opportunity for extended product responsibility rests with those throughout the commerce chain—designers, suppliers, manufacturers, distributors, users and disposers—that are in a position to practice resource conservation and pollution prevention at lower cost. http://www.biac.org/statements/env/FIN97-12_biac_discussion_paper_epr.pdf.
7. Definition of Source Reduction from U.S. EPA: “Source Reduction refers to any change in the design, manufacture, purchase, or use of materials or products (including packaging) to reduce their amount or toxicity before they become municipal solid waste. Source reduction also refers to the reuse of products or materials.”
8. The presence of infrastructure to collect and recycle materials is incorporated into some definitions of recyclability. These definitions pose a significant barrier to material innovation because it continues to favor the use of existing materials versus the development of optimized materials that may not currently have infrastructure for collection and recovery.
9. United Nations Environmental Programme. *Cleaner Production—Key Elements*, May 11, 2001. Online. UNEP Production & Consumption Branch, July 22, 2005. Available at http://www.uneptie.org/pc/cp/understanding_cp/home.htm#definition.
10. Definition of Green Chemistry: the design of chemical products and processes that reduce or eliminate the use and generation of hazardous substances. http://www.epa.gov/greenchemistry/whats_gc.html.
11. Definition of Green Engineering: the design, commercialization, and use of processes and products, which are feasible and economical while minimizing (1) generation of pollution at the source and (2) risk to human health and the environment. Available at http://www.epa.gov/opptintr/greenengineering/index.html.
12. “Green Engineering transforms existing engineering disciplines and practices to those that promote sustainability. Green Engineering incorporates development and implementation of technologically and economically viable products, processes, and systems that promote human welfare while protecting human health and elevating the protection of the biosphere as a criterion in engineering solutions. Available at http://enviro.utoledo.edu/Green/SanDestin%20summary.pdf.
13. The Natural Step. Design, 2004. Online. The Natural Step, July 22, 2005. Available at http://www.naturalstep.org/services/design.php.
14. These comments are only valid for incinerators that do not emit dioxins and other pollutants into the atmosphere (i.e., they are equipped with appropriate waste air scrubbing and cleaning processes. The latter is referred to “safe incineration with energy recovery”).

SUSTAINABLE PACKAGING: CONCEPTUAL FRAMEWORK

Kit L. Yam
Department of Food Science,
Rutgers University, New
Brunswick, New Jersey

In 1987, the World Commission on Environment and Development defined the term “sustainable development” as the guiding principles for meeting the needs of the present without compromising the ability of future generations to meet their own needs. Similarly, the European Union defined sustainable development as a vision of progress that integrates immediate and longer term needs, local and global needs, as well as regards social, economic, and environmental needs as inseparable and interdependent components of human progress. In these definitions, the general terms, guiding principles, and vision of progress are used, because sustainable development is a complex process with no specific steps applicable to every situation.

Today interest is growing from organizations, governments, and companies around the world to give sustainable development useful and practical meanings. Although the concept of sustainable development is important to virtually all industries, this article is focused on sustainable packaging.

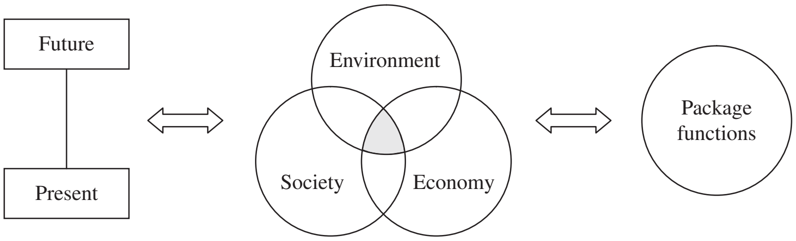

Figure 1. Conceptual framework of sustainable packaging.

The Sustainable Packaging Coalition, a leading organization for sustainable packaging, defines sustainable packaging as a target vision for creating "a world where all packaging is sourced responsibly, designed to be effective and safe throughout its life cycle, meets market criteria for performance and cost, is made entirely using renewable energy, and once used is recycled efficiently to provide a valuable resource for subsequent generations" (see also Sustainable Packaging).

CONCEPTUAL FRAMEWORK

The framework below describes substance packaging as a holistic concept that consists of three interrelated components.

The first component is related to time and perpetuality. Sustainable packaging is aimed at not only meeting the needs of the present generation, but also meeting the needs of future generations. It requires a cradle-to-cradle flow of packaging materials in which the materials can be used repeatedly without depleting resources.

The second component is related to striking a healthy balance to meet the needs of the environment, society, and economy—a packaging system is not truly sustainable until all these elements are addressed in an equitable manner. For example, a packaging system with the sole purpose of maximizing profits is irresponsible if it fails to address the needs of the environment and society. Similarly, a packaging system with the sole purpose of minimizing the negative impacts to the environment is unrealistic if it fails to address the needs of the society and economy. In Figure 1, sustainability occurs only in the shaded area where the circles of environment, society, and economy meet.

The third component is related to the packaging functions, which are as follows: containment, protection, convenience, communication [see Packaging Functions and Environments; Intelligent Packaging]. Unless a package can perform some useful functions, the justification of its existence is questionable. For example, a package may be considered environmentally friendly because it is biodegradable; however, if it fails to protect the product, the product will likely be discarded and not used by the consumer. The packaging functions, unfortunately, are largely overlooked in the literature when sustainable packaging is discussed.

Many articles in this encyclopedia fit under and support the conceptual framework in Figure 1. For example, the impacts on the environment are addressed in articles such as Biobased Materials, Environment, and Life Cycle Assessment. The socioeconomic factors are addressed in articles such as Economic of Packaging, Laws and Regulations, and Tamper-Evident Packaging. The packaging functions are addressed in articles such as Packaging Functions and Environment, Food Packaging Development, and Packaging of Food. In fact, many articles in this encyclopedia describe packaging materials, processes, products, or technologies for achieving certain desirable packaging functions.

GUIDELINES FOR DEVELOPING SUSTAINABLE PACKAGING

How best to develop sustainable packaging to meet the needs of the present without compromising the ability of future generations to meet their own needs? Although no straightforward answer exists to this complex question, below are some useful guidelines:

- Consider the conceptual framework in Figure 1 and strike a healthy balance to meet the needs of the packaging functions, environment, society, and economy (see Packaging Functions and Environment).
- Avoid over-packaging by using minimal, but adequate, amount of materials to meet safety, quality, and market needs.
- Avoid toxic constituents and use energy efficient technologies whenever possible for manufacture and distribution of product.
- Whenever feasible, use packages that are made of renewable, environmentally friendly, or recycled materials, without compromising product safety and quality or greatly increasing cost.
- When developing packaging system or technologies, it is important to strike a healthy balance to meet the needs of the environment, society, and economy.
- Use methodologies such as life cycle assessment (LCA) to aid the development of sustainable packaging.

T

TAGS

Linda L. Butler
National Business Forms
Association

INTRODUCTION

Tags have been used in all areas of business and industry for centuries. The more progressive merchants of the 1800s used tags in the same manner and for the same reasons as merchants today: to inform, instruct, identify, and inventory (see Figure 1). Traditional cloth and paper materials have been joined by nonwoven and film-based synthetics (see Nonwovens; Plastic Paper).

Tags used in retail environments are generally produced from cast-coated paperboard stocks ranging in thickness from 8 to 10 points (0.008–0.010 in., 203–254 μm). Type stands out and colors are brilliant on the smooth surface of cast-coated stocks. Cloth tags are frequently called “law labels.” This term describes labels generally sewn onto mattresses and furniture to comply with government regulations regarding the identification of stuffing materials. Tags manufactured of synthetics such as nonwoven Tyvek (DuPont Company) are gradually replacing cloth tags because they exhibit an extremely high tear strength, are insensitive to moisture, and have a smoother, more uniform printing surface than cloth. Plastic tags are generally used for advertising or instructional purposes in the retail industry.

Figure 1. Price marking tags from the 1800s.

Many fastening methods are available, but the most common in the retail industry for product identification is a knotted string (see Figure 2**a**). Plastic barbs are generally used for price marking in retail garment applications. Manufactured from an ultrathin plastic, these barbs affix price tags to ready-to-wear merchandise to prevent price-tag switching. Plastic barbs can also be combined with a hook (see Figure 2**b**) to hang merchandise such as socks.

In manufacturing, processors, converters, and fabricators have a variety of uses for tags. Tags play an important part in tracking serially numbered goods such as electronic components. The simple tag shown in Figure 3**a** uses transfer tape on two of the three stubs to enable the tag to

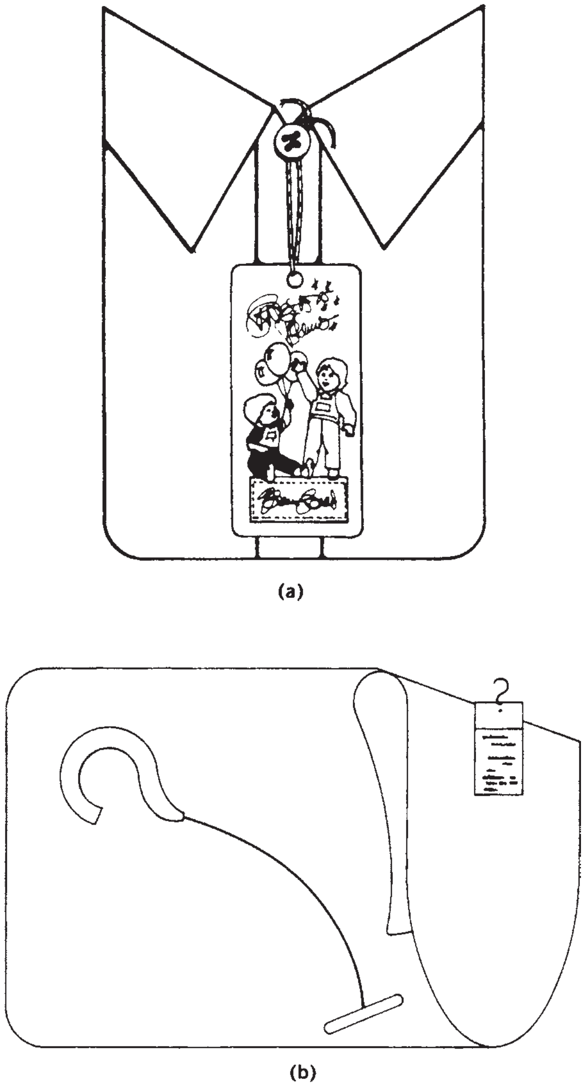
(a)

(b)

Figure 2. (**a**) Knotted-string fastener. (**b**) Plastic barb with hook.

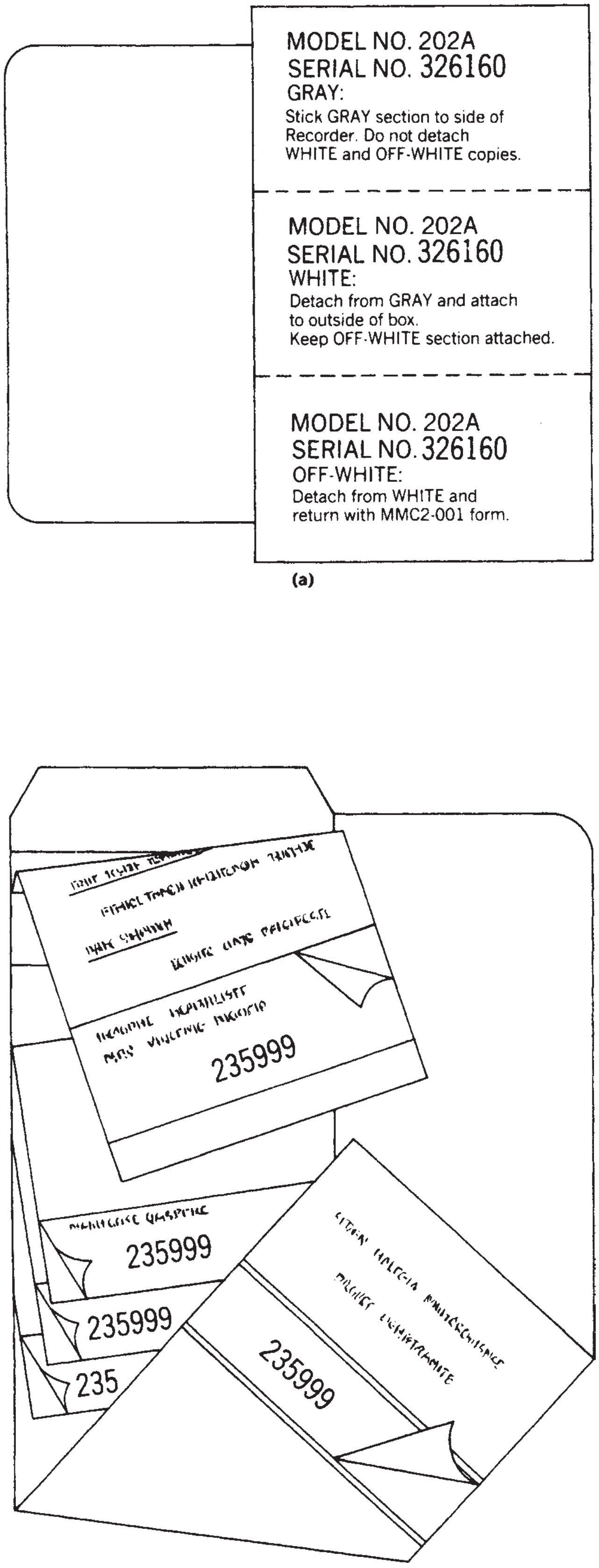

Figure 3. (**a**) A three-stat tag. (**b**) Tag-and-label combination.

travel with the component throughout the entire packaging cycle without losing track of the serial numbers. Color coding minimizes the need for processing instructions. The entire tag is affixed to the component at the end of the assembly line, using the transfer tape on the gray stub first. Prior to boxing the product, stubs two and three (white and off-white) are detached and affixed to the outside of the box. On receipt of shipping instructions, the off-white portion is detached and forwarded with a copy of the shipping document to inventory control.

Tags and pressure-sensitive labels are frequently combined to create unusual tag products. The tag in Figure 3**b** includes four pressure-sensitive labels, each carrying the serial number of the component, in addition to the nameplate, which in this case is affixed to the product after delivery by the installer. The tag is attached to the component with string or transfer tape, depending on the surface or characteristics of the component. The shipping department lifts up part 1 to reveal part 2 of the set, which consists of a small-face slit label containing the serial number of the component and the instructions "put on shipping document." Part 2 is torn at the perforation along the top and reveals three additional labels with instructions for distribution (warehouse copy, distributor copy, installer copy). This unusual tag and label combination provides a simple solution to the often difficult task of tracking serially numbered products and components from assembly through shipping to their ultimate destination.

Tag applications in the retail packaging industry include, but are not limited to, product description, content identification (i.e., materials used in production), care and use instructions (i.e., operating and care directions, identification of potential hazards), guarantee and warranty information, decoration and promotion, inventory control, and price marking (frequently combined with inventory control when using magnetic stripes, OCR, or bar codes) (see Bar Code; Code Marking and Imprinting).

Product marking tags, also called "hang tags," are printed in up to eight colors on a variety of stocks and include many features designed to get the attention of the potential consumer. Sizes range from small jewelry marking tags (see Figure 4**a**) to oversized tags used to identify major appliances.

Hang tags are generally shear-cut, die-cut, or continuous, and they offer maximum versatility for product identification, sales promotion, and advertising. The three basic tag styles found in retail tagging applications are shear-cut, die-cut, and continuous tags.

SHEAR-CUT TAGS

Shear-cut tags, also called "shipping tags," are the oldest and most common of all tag styles. Shear-cut tags are simply sheared off the end of the web from the bindery section of the press after all manufacturing processes are completed. These tags may be simple, printed on one side with black ink, with a standard 3/16-in. (4.8-mm) punched hole. They may also be very complex, with such features as multicolor printing on both sides. Eyelets in tags used

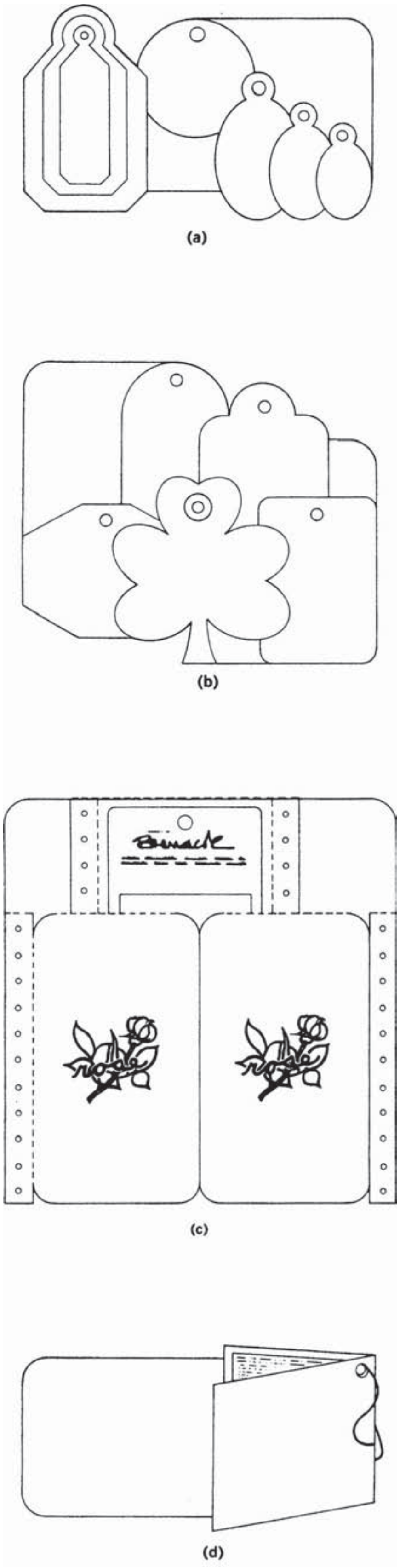

Figure 4. (**a**) Jewelry tags. (**b**) Die-cut tags. (**c**) Continuous tags. (**d**) Booklet tag.

for product identification are rarely reinforced because the life expectancy of the tag is short.

DIE-CUT TAGS

Die-cut tags are cut out of the web at the end of the bindery section of the printing press using either stock or custom-manufactured dies. Die cutting produces tags that are round, have rounded or scalloped corners, or have unusual shapes as shown (see Figure 4**b**). Die-cut tags may have all or most of the features of shear-cut tags, but usually do not require features such as large patches or jumbo numbers. They are used primarily as promotional pieces or to convey information regarding a specific product, and they are usually not subjected to a great deal of rough handling.

CONTINUOUS TAGS

These are used in applications where variable information is imprinted by a computer printer. Many possibilities exist for the number of perforations and form depths since stop-and-go presses are used in their manufacture. Continuous tags are generally used for retail price marking (see Figure 4**c**). Special features are frequently incorporated to create hang tags that are used effectively as promotional pieces.

Booklet tags are shear-cut tags, scored vertically to form a fold, providing four surfaces for copy instead of two (Figure 4**d**). Special effects can be added to further enhance the image of these versatile tags. Die cuts on one of the pages, generally the first, can be used to highlight the company logo or trademark or provide a representation of the product (Figure 5**a**). Die cuts are also used on the front cover to create a window on the cover panel or to create a three-dimensional effect. The die cut is generally backed up with a solid color block or printed design which shows through the die cut (Figure 5**b**). *Gatefold tags* are a special variety of booklet tag featuring two vertical scores to form three separate double-sided surfaces for a total of six surfaces available for printing (Figure 5**c**). *Accordion-fold tags* have three vertical scores that create a total of four “pages” with eight surfaces for printing. Accordion-fold tags also may be produced with additional scores to add pages and sides (Figure 5**d**).

Many applications require that tags not only carry a message regarding the product but also serve as a carrier for the product itself. In instances where merchandise (e.g., jewelry) is hung on racks for display or when merchandise is seasonal and only temporarily displayed, this type of tag is very effective. Figure 6**a** shows a tag with die cuts and additional punches to hold stick pins in a retail jewelry application. The center punch is used to hang the merchandise on a display rack. The tag shown in Figure 6**b** uses two die-cut triangles to hang gloves on display racks in order to conserve space because of the product’s seasonal nature. The tag is folded at the score over the cuff and stapled to fasten it to the merchandise. The die-cut triangle is then used to hang the gloves on the display rack. Figure 6**c**

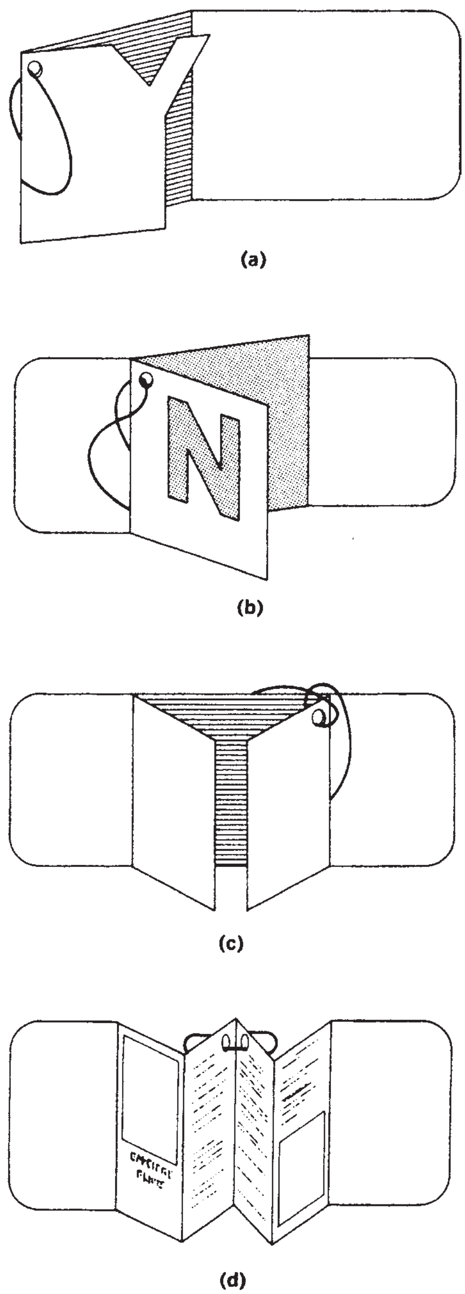

Figure 5. (**a**) Die-cut outline. (**b**) Three-dimensional die-cut tag. (**c**) Gatefold tag. (**d**) Accordion-fold tags.

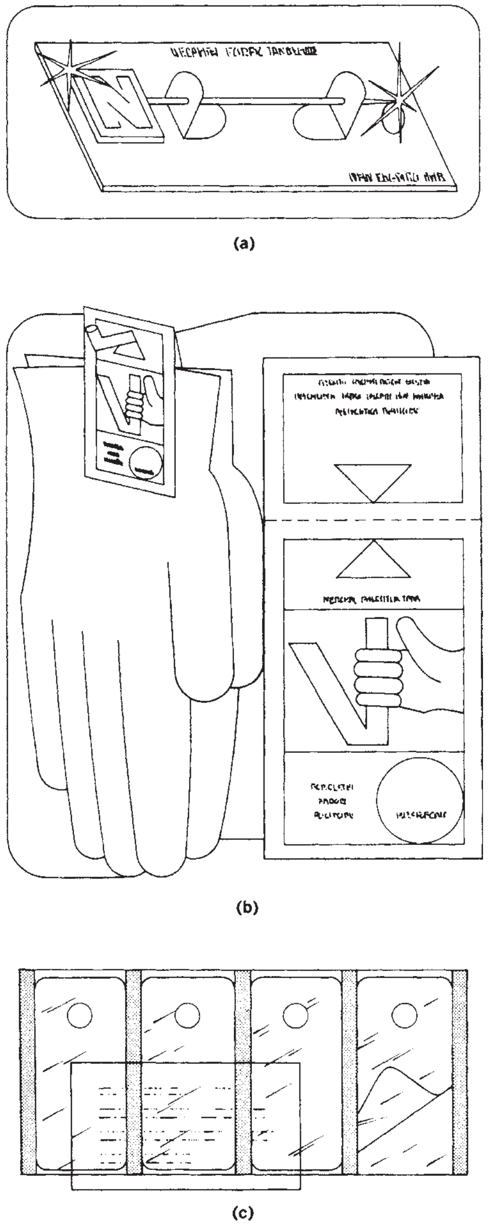

Figure 6. (**a**) Jewelry display tag. (**b**) Display-rack tag. (**c**) Transparent hang tag.

shows a hang tag of clear plastic partially coated with a pressure-sensitive adhesive. The coated portion of the tag is applied to the merchandise, and the die-cut hole is used to hang the merchandise on the rack.

Tags used for price marking are generally produced as continuous tags. These tags satisfy the special needs of large retail organizations by affording them the opportunity to ship preprinted price tags along with stock shipments to their various distribution locations. The tags come in a variety of sizes and shapes are generally affixed with plastic barbs by tagging guns to prevent price switching. The accelerated use of computers in the retail industry has had a dramatic effect on the appearance and use of tags. Price-marking tags are now being produced with magnetic stripes (Figure 7**a**), which can contain information such as style, lot number, and manufacturer. In addition, bar code and OCR (optical character recognition) technologies have gained acceptance in the retail tag market.

Tags can also aid in theft prevention, which is one of the biggest concerns in the retail industry. Hard plastic tags such as those shown in Figure 7**b** are affixed to articles of clothing in many large retail stores. The tags must be removed at the time of sale to prevent triggering an alarm as the garment passes through a special gate that contains a scanner that is sensitive to the tag. Because of their bulk, these tags are used primarily for clothing. Recent innovations in miniaturization have

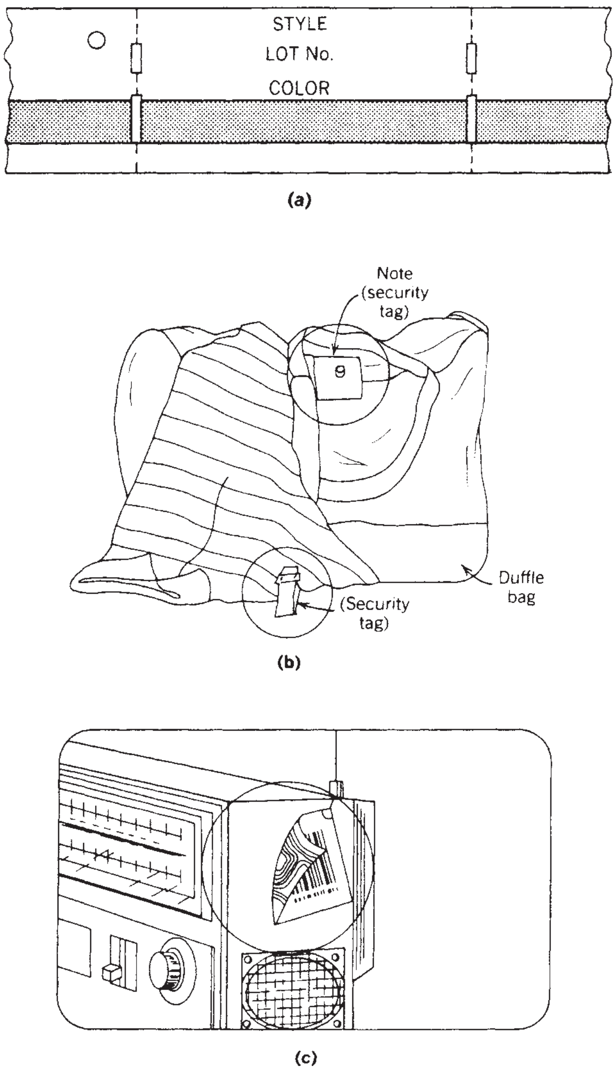

Figure 7. (**a**) Marking tag with magnetic stripe. (**b**) Plastic electronic security tags. (**c**) Security tag with miniaturized radio circuit.

produced tags with what appears to be a strip of aluminum foil (Figure 7**c**), but which is actually a built-in security device. If not deactivated by another strip of foil affixed at the time of sale, these circuits interrupt radiowaves being transmitted from the exit gate and set off an alarm. These tagging systems are currently marketed by companies that sell retail-security systems.

Industry indicators predict that the future of the tag industry in retail operations will not be adversely affected by advances in computer technology. As long as there are products to be identified, inventoried, and priced, there will be a market for tags of all kinds in the retail industry.

BIBLIOGRAPHY

Linda L. Butler, "Tags" in M. Bakker, ed., *The Wiley Encyclopedia of Packaging Technology*, 1st edition, John Wiley & Sons, New York, 1986, pp. 624–628; 2nd ed., R. J. Brody and K. S. Marsh, eds., 1997, pp. 875–879.

TAMPER-EVIDENT PACKAGING

Jack L. Rosette
Forensic Packaging Concepts,
Inc., Jefferson City, Tennessee

HISTORY OF THE PROBLEM

Since 1982 the entire industry, including the consumer, has become aware of tamper-evident packaging. This awareness has benefited the consumer by a reduction in loss of life due to consumption to adulterated products from tampering. Never before has an industry reacted so swiftly to resolve a problem that could be the ruination of most manufacturers.

In 1982, seven people in the Chicago area died from consuming cyanide-laced Tylenol capsules. The incident resulted in a total product recall, massive negative publicity for the product, new requirements for safe packaging, and a federal statute making product tampering a crime. Since that time, the packaging industry has become visible to most consumers.

HISTORY OF INCIDENTS

Although there were incidents prior to 1982, product tampering became highly visible after the Chicago incidents. The exact number of incidents per year is unknown because of various methods of reporting. Beginning with the 1982 deaths, there have been deaths from product tampering that are widely known such as those in 1982, 1986, and early 1991. All deaths due to targeted tampering are not included, because we are discussing random tampering, not tampering with a specific person in mind. It is probably a coincidence on the timing as the various incidents are unrelated, and in some instances the violator in earlier cases was incarcerated at the time of the ensuing incidents.

According to government figures, the problem peaked in the United States in 1986, when there were almost 1800 claims of possible product tampering. The number has decreased to around 500 per year now. Is the decrease due to better packaging or less interest on the part of potential violators, due to the penalties for violating product-tampering laws? Considering the experience in assisting law-enforcement agencies, the decrease appears to be caused by a change in the way claims are recorded as well as a reluctance on the part of manufacturers to report all claims of possible product tampering.

If the experience of other developed nations is an indication of the future, it is expected that the problem of product tampering will escalate in this country in the future. Every developed nation has experienced product-tampering incidents. The main difference between domestic incidents and what is happening elsewhere is the motive of the tamperers: extortion prior to injury, with money appearing to be the primary motive, versus apparently random tampering without prior threat in this country. Most developed nations are either implementing or modifying their rules on the use of tamper-evident packaging. Some features as they are used in the United States would have to be modified, or the use of a secondary feature would be required to meet the standards of various countries.

The problem of state-sponsored terrorism is so serious that a series of meetings were held in the late 1970s were the problem was addressed in great detail. Participating in the meetings were representatives of the FBI, Commerce Department, Defense Department, State Department, and CIA. One of the chief concerns at the time was the threat of retail-product tampering by a state-sponsored organization. The term “state-sponsored terrorism” refers to any group of terrorists that is supported financially, logistically, or in intelligence by a government body of any country. It has been documented that training in ways to tamper with retail products and how to use such acts to further their agenda is being conducted in certain countries that sponsor terrorist groups. Picture, if you will, the potential for disaster that exists if a potential tamperer has the financial and human resources available to build a complete packaging line and can print duplicate labels. It sounds far-fetched, but a similar incident occurred in South America when a drug organization bought a beverage plant to smuggle cocaine into the United States. In that case at least one bottle in a specially marked case contained the drug in a liquid form. When the contents of the bottle was distilled in the United States, it would yield a powder that could then be cut in strength and distributed to the dealers. Unfortunately, one bottle was overlooked and sold to a consumer who died from a massive cocaine overdose.

While most incidents of retail product tampering in the United States have been perpetrated by individuals, the potential exists for even greater harm from the same acts committed by a state sponsored terrorist group.

THE FDA RULE

In 1982 the FDA passed a rule (21 *CFR* 211.132) requiring the use of tamper-evident packaging on all over-the-counter (OTC) drugs and some cosmetics, while ignoring other products they regulate. The fact that your product is not required to use tamper-evident (TE) packaging does not protect you in the event of a claim of product tampering.

According to attorneys specializing in packaging and product liability, product tampering is a foreseeable possibility, and manufacturers have a responsibility to protect consumers against such possible acts. If your product in an adulterated form could harm a consumer, you have a responsibility to protect the product and consumer against such acts. This means that the use of tamper-evident packaging transcends FDA regulations.

The Rule specifies which packaging features are acceptable for use in providing resistance to tampering, and the list was modified in 1988. At the current time there is a proposal to modify the Rule again and to make the acceptability of a feature based on performance.

What if the feature you want to use is not on the approved list of the FDA? The FDA has a procedure by which methods of providing protection that are not on the approved list may obtain approval on a case-specific basis. To obtain approval, samples of the complete package must be submitted to the FDA along with a written request for a waiver. Contact the local FDA compliance officer to find out the current procedure to obtain approval.

The inclusion of a specific form of protection does not warrant that the feature will deter violation, nor does it prevent legal action in the event of a claim of injury related to product tampering. There are variances in designs, and even tooling of the same design that affect the effectiveness of each feature. Any evaluation of a package relates to the exact components used in the tests, and material from a different manufacturer will usually result in a different level of effectiveness, much the same as using a different resin or closure liner will affect a stability study.

CONSUMER PREFERENCES

Studies into consumer preferences for tamper-evident packaging have consistently revealed that the consumer prefers products that are resistant to tampering and prefer the features to be shelf-visible. The same studies indicated a willingness to pay slightly more than a competing brand that is not TE. The exact amount is inconsistent among the studies, but the consistent replies of concern indicate consumer awareness of packaging. This awareness increases with publicity of tampering incidents, and it decreases with time until the next publicized incident.

COST OF CLAIM OF PRODUCT TAMPERING

The cost of responding to a claim of possible product tampering would boggle the mind of the average person. The cost begins when the complaint is received by company personnel, and it includes the following:

- *Meetings that Will Be Held to Determine How to Respond to the Claim.* A complaint of possible product tampering requires participation of top management in all phases of meeting the problem.
- *Expenses Related to High-Level Managers Visiting the Locale Affected.* Top management or their representative will usually visit the location involved to get a better feel for the situation.
- *Cost of Picking Up All Stock and Possible Restocking of Retail Displays.* . If the brand is to remain viable, fresh supplies must replace all product that may have been vulnerable to violation.
- *Cost of Complete Inspection of Targeted Stocks or Destruction of Those Not Capable of Inspection.* Since it is unlikely that the entire supply of product on the shelves at the time of the incident was affected, inspection of the stock may prevent destruction of the entire inventory.
- *Lost Sales When Consumers Changed to Other Products.* Many consumers will switch to other brands until they regain confidence in the brand affected.

- *Rewards for Information on Incident*. Rewards usually lead to information as to the identity of the violator and result in ending further incidents.
- *Fees for Packaging Consultants*. Since it is impossible for every company to have employees who are experts on every contingency, outside consultants will be required to assist in meeting the challenge.
- *Cost of Legal Counsel to Respond to Litigation*. Self-explanatory.
- *Damage Awards Where Determined in Court*. See above.

The list can go on. Many of these costs will be incurred even in false claims of possible product tampering.

When compared to the potential expense for defending a single claim of tampering, the cost of effective tamper-evident packaging becomes insignificant. Some in the industry will take the moral position that we have an obligation to protect the consumer and they are right. Beyond the moral position is the reality that many firms simply cannot afford the cost of responding to product tampering claims, especially if the firm is a small, with a very limited product line where the reputation of the entire product line can be affected by adverse publicity on one item in the product line. Liability insurance cannot restore lost-customer confidence.

A recent incident, later determined to be suicide, almost caused a household name brand to go out of business because of the high cost of produced recall and package redesign, even though the product and company were linked to the incident only by circumstance.

In considering cost, the cost associated with responding to one claim of product tampering far exceeds the cost of incorporating tamper-evident features in the package design. Would you want to explain to your boss how your company could not afford the penny or two for making each package tamper-evident, and how you can afford the 10 million dollars or more your company is spending on defending a claim of possible product tampering? Who can put a value on human life that would justify not using effective tamper-evident packaging? The reality is, tamper-evident packaging should be utilized if it will provide any protection for your product, regardless of government regulation.

SELECTING WHICH FEATURE TO USE

Everyone has a preference for one type of package over another. This preference has been developed by either the products we manufacture or our experience with various types of packaging in our everyday living. Selecting which feature to use should not be affected by these preferences, but by objective testing during the package development stage.

During the design stage, the package engineer should consider the function of the product and how the consumer intends to use it. Next, each TE feature that is usable on the package should be tested to determine which feature will offer the greatest protection to the consumer. The test used should be objective, consistent, and replicable. Records of the test results should be retained indefinitely. If a feature selected for use achieves a lower value than others that were rejected, reasons for the selection should be recorded and retained with the test results. Remember, cost cannot be a factor in selecting which feature to use. You would not want to be questioned by attorneys for the other side as to why you were willing to accept less effectiveness to save a few pennies and to compare those few cents to the value of injury to a consumer.

One form of testing the effectiveness of tamper-evident packaging is the *Rosette Protocol*, which measures the degree of difficulty in violating a specific package and restoring it to a nearly original condition. The Protocol also measures increases in effectiveness through the use of multiple features. The value for a specific combination of features is not equal to the sum of each feature. Some factors cover the combination, rather than each feature separately. For example, the knowledge factor is applied once, regardless of the number of features in the combined package, and only one knowledge level was required. Time is cumulative; if it takes 20 min to violate each feature, the time required is not the value for 20 min multiplied by the number of features used on the package. In this example the time factor is the value for 1 h. Only one category of equipment may be required if all tools or equipment required to violate the different features in the combination are in the same class. The feature visibility values for all used on multiple feature packages are multiplied; even the use of multiple features that are not shelf-visible increases the effectiveness of the package. The feature material is added for each feature replaced or reused to determine the feature material value. The value of the feature, used with the specific package components, on the specific product and form of product tested, is the sum of all the factors.

The FDA and the Non-prescription Drug Manufacturers Association have expressed concern that the industry would gravitate to the feature achieving the highest score in any testing procedure. In reality, the value for a specific feature will vary, depending on the exact product and all other packaging components used in a specific package. The same feature from different manufacturers may achieve different values, because there are slight variations in design and manufacture, even though the features may appear to be identical. If a value were to be established at 20 on a scale of 0–50 for a single feature, the value of 20 could be attained through the use of multiple features if necessary. This would preclude any single feature from becoming the industry mandated method to provide protection. The above value of 20 is for illustration purposes only; prior testing has shown the minimum design for FDA acceptance to be around 11, with some minimum values for approved features scoring much higher. A standard requiring 20 as the minimum value would require most packages to be improved before the package would meet the standard. The use of multiple features can result in a value higher than 50. While the Rosette Protocol has been tested and in use for several years, there are others that may be as objective and in use by other companies.

Certain tamper-evident features in use today, and approved for use by the FDA, are at best window dressing. Such features can be violated without the use of tools of any type, the feature removed and replaced after violation of the package, and all without leaving any indication of possible violation. Some very effective alternatives to the features are not being used because of a slightly higher per unit cost. Other features used to provide resistance to violation are being used in a form that does not meet the FDA standards and can be duplicated very easily—all to save a penny per unit. It is time for the packaging industry—the producers and the users—to accept their responsibility and provide effective packaging to their customers. The best way to do this is through the use of an objective approval process that disregards minor costs or inconveniences.

WHAT IS THE BEST TE FEATURE?

A lot of people ask "What is the best TE feature?" No single TE feature is best for all products! There are variations in effectiveness of similar features from different manufacturers as well as variations in effectiveness where the product contributes to the effectiveness. An example is a metal can which is much more effective for a carbonated product than for a noncarbonated product. The product can determine which feature provides the most protection; for instance, a product that can be adulterated effectively by penetration would require a more rigid outer container than one that degrades visibly on violation by penetration. The best feature for your product is the one that provides the greatest resistance to violation for that product in its current form and size. All features can be violated in some manner; effective TE features provide greater difficulty in violating the product than do ineffective features. In some cases the packaging was violated by being opened, just as any consumer would do, and then the tamperer replaced the original product with a toxic substance, not making any attempt to restore the package to its original appearance. The package worked as intended—it showed that it had been opened, but still resulted in injury to the consumer. The violation does not have to be exotic to harm the consumer. Tamperproofness does not exist!

DOES TAMPER-EVIDENT PACKAGING WORK?

Since the implementation of the FDA rule (21 *CFR* 211.132) in 1982, the consumer has increased awareness of packaging. This awareness has led to an increase in the number of complaints of possible product tampering, although most incidents are later dismissed as unfounded. Tamper-evident packaging prevents tasting in stores, prevents in-store violation, and, if the feature is intact, ensures the consumer that the product is safe. Effective tamper-evident packaging acts as a deterrent to most persons who would commit such acts of violation and makes it difficult for others to violate the package and restore it to its original appearance. Yes, effective tamper-evident packaging works, provided that consumers are aware of the feature and pay attention to what they are about to use.

Most experts agree that the consumer should be more aware of what to look for in tamper-evident packaging. Educating the consumer could include pictures of the feature and product on the label and in media ads. One recent case resulted in loss of life where the package met this test with two indicators: The product was pictured on the label and the actual product consumed did not resemble the picture on the label in two different ways, as well as numerous other indications of violation. The consumer used the product anyway and died from consuming the substituted item. If the consumer had examined the product and package, it should have been obvious that the product was not to be used. Better consumer awareness may have prevented this incident.

The consumer today is different from those in previous generations. You may remember as a child that if a can was dented, it would be passed over by shoppers until it was the last package on the shelf. Most dented cans were sold at a discount in a special bin. Today consumers are so confident of the quality of the product, and accustomed to manufacturing defects, transporation damage, and other variations in the package, that they accept without question packages their parents and grandparents would have rejected. This demonstrates the confidence the consumers have in our products, which we can be proud of, but insulates them from taking responsibility for their own safety.

Both the products themselves and their manufacturers have taken the entire blame for past incidents of product tampering. Another weak link in the chain of package security is the retailer. In prior cases, the retailer has not been held accountable for the violation of any package, or the sale of packages with obvious indication of prior opening. During research, many stores were visited to observe what products are converting to the use of tamper-evident packaging and to determine which features are used on what types of products. During those visits, many packages were observed where the tamper-evident feature indicated possible prior opening. In every case the package was taken to the store manager, with an explanation of what was observed. Their statements have ranged from "I will put it aside for the salesman to pick up" to "there's nothing wrong with it, it happens all the time" to "put it back on the shelf and I will have the company pick it up." What if the package had been violated and a consumer died from using the product? How does the manager know that another consumer will not buy the package before the company picks up the product? Retailers need to participate more in making tamper-evident packaging work as intended, rather than being a weak link in the chain of package security.

PRODUCT TAMPERING AS AN INTERNATIONAL TERRORISTS TOOL

The compalcency of the world was shattered on 9/11. When the World Trade Center collapsed, so did the feelings of sereness and security of most Americans. On 9/11 all potential acts of terrorism— biological and others— became real-world and increased our awareness of our surroundings and actions by others that may indicate a potential threat to our safety and wellbeing. The risk of retail product tampering being used by international or domestic terrorists has existed for decades, and 9/11 did not change the potential threat for its use as a terroristic tool. The author proposed a means for identifying potential large—scale product tamperers to Federal law enforcement agencies in 1991. The laws at the time precluded their ability to implement such a domestic threat identification program. Perhaps someday we will be able to take a proactive position and reduce the potential use of product tampering as a terroristic tool.

MAKING TAMPER-EVIDENT PACKAGING WORK

Making tamper-evident packaging work as it should requires the efforts of all involved: The manufacturers of packaging components should promote effective packaging for use in providing protection, product manufacturers should use the most effective feature for their product, retailers should be aware of the potential for violated products being in their display, the consumer should maintain an awareness of what to look for in a secure package and refuse to buy packages that look suspicious, law-enforcement agencies should conduct professional investigations and prosecute all violations, government agencies should provide for legal relief to companies meeting or exceeding government standards, and the media should report only those incidents that are verified as representing a threat to the health and welfare of the public without causing hysteria through false alarms. It all begins with you as packaging professionals.

Product tampering will not disappear. We as an industry must remain committed to providing the consumer with quality products in packages that provide protection to the consumer. Since 1982, we have come a long way, but we must continue to research and develop improvements in packaging to ensure the availability of safe products for the next generation.

BIBLIOGRAPHY

General References

Books

J. L. Rosette, *Development of an Index for Rating the Effectiveness of Tamper-Evident Packaging Features*, Master's thesis, California Coast University, Santa Ana, CA, 1985.

J. L. Rosette, *Improving Tamper-Evident Packaging*, Technomic Publishing, Lancaster, PA, 1992.

J. L. Rosette, *Product Tampering Detection*, Forensic Packaging Concepts, Inc., Atlanta, 1993.

Walter Stern, *Packaging Forensics; Package Failure in the Courts*, Lawyers & Judges Publishing Co. 2000.

Publications

Code of Federal Regulations, Chapter 21, Government Printing Office, Washington, DC.

Federal Register.

Food & Drug Packaging, published monthly.

Articles and Technical Papers

D. Lowe, "Crisis Management Marketing, Tampering Strategies for International and Domestic Marketplace Terrorism," *San Francisco State Univ. J.* 1 (1990).

J. L. Rosette, "Defending Against Terroristic Tampering," 1991.

Incident Reports, 1986 to 2006, reports of claims of possible product tampering from various law-enforcement agencies.

J. L. Rosette, "Product Tampering as It Affects Consumers and Law Enforcement," 1992 *FBI Law Enforcement Bull*. (September 1991).

Product Tampering in the Marketplace" Foundation for American Communications, 1986.

Product Tampering Problems, Foundation for American Communications, 1993.

J. Sneden, H. Lockhart, and M. Richmond, *Tamper-Resistant Packaging*, Michigan State University, 1983.

Trends in Product Tampering, 1990, FDA & FBI data on product tampering.

TAPE, GUMMED

R. W. Mc Kellar
The Gummed Industries
Association

INTRODUCTION

Gummed paper tape and reinforced gummed paper tape have always been very effective carton sealing materials. Technological advancements in paper, laminates, adhesives, reinforcements, and dispensing and application equipment provide today's user with a scientifically produced high-quality product. Gummed tapes are environmentally friendly because they are made from natural raw materials and are 100% recyclable. Depending on the packager's need, gummed tape can be obtained with a wide range of tailor-made special features. Advantages of using gummed paper tape include the following: (a) It is tamper-proof, that is, the tape cannot be removed from a carton without leaving traces; (b) water-activated adhesives in gummed paper tape penetrate right into the liner of the carton, creating a total bond; and (c) extreme temperatures do not change the characteristics of gummed tape. The closure is resistant to aging (1).

TYPES

There are two basic forms of gummed tapes: single-ply nonreinforced "paper" sealing tape and double-ply fiberglass "reinforced" sealing tape. Both varieties begin with what is commercially known as "gumming kraft," which differs from ordinary kraft paper in that it is sized to prevent the adhesive from penetrating too deeply into the paper. Following application of a vegetable-based remoistenable adhesive (see Adhesives), single-ply paper-sealing tape is slit into roll lengths of 375–6000 ft (114–1829 m).

Depending on the basis weight of the paper (35#, 60#, or 90#) (see Paper), the product is categorized for light-, medium-, and heavy-duty application.

PRODUCTION

Double-ply reinforced gummed sealing tapes are produced by sandwiching fiberglass yarns between two sheets of kraft paper with either a hot melt of water-based adhesive. The use of recycled pulp in the paper is encouraged (2). Fiberglass yarns generally run in three directions (machine direction and both transverse directions), forming a diamond or "three-way" pattern. As in single-ply paper tapes, a water-remoistenable adhesive of vegetable and/or animal glue formulation is applied to the bottom sheet before or after lamination. Depending on the user's needs, paper basis weight, yarn spacing and denier, and laminate- and adhesive-coating, weight can be varied to produce products for light-, medium-, and heavy-duty application. Finally, the parent or "jumbo" roll is slit into smaller rolls ranging in size from 360 to 4500 ft(110–1372 m).

Both paper and reinforced sealing tapes are usually wound gummed-side-in on a cardboard core. Most manufacturers also supply coreless rolls. Tape widths generally range from 1 to 3 in. (25 to 76 mm) in 1/2-in. (13-mm) increments. Gummed tapes are available in a range of colors, widths, and lengths. They can also be custom-printed and can be obtained in strippable grades or with special antitheft, tamper-evident, or inventory-control features.

USES

When properly purchased and applied, both paper and reinforced sealing tape fully meet the requirements and specifications for rail (UCC Rule 41), truck (NCB Rule 222), plane, parcel post, UPS, and other parcel delivery-service shipments. General Services Administration Commercial Descriptions (CIDs) A-A-1492A, A-A-1671A, and A-A-1672A govern the purchase of gummed tapes by the federal government.

Gummed tape sticks well to a wide range of products, but will not adhere to plastic products. Tapes are strong and can be used for very heavy cartons. They are odorless, so they can be used in the food industry. They are hygienic, which is ideal for pharmaceutical products. The tapes will hold firm and do not stretch, making them ideal for bar-code readability. Gummed paper tapes' strength and tamper-evident qualities are important for packaging high value products, such as alcohol and jewelry. The tape's printability adds to safety by enabling batch and transport information to be printed onto the tape at the very moment of closing the box. Last-minute printability allows for savings because fewer preprinted boxes are needed (1).

Gummed tape dispensing and application equipment fall within several categories: (1) hand-operated dispensers; (2) electrically operated dispensers; (3) automatic taping machinery for fixed-size boxes, and (4) automatic taping machinery for random-size boxes.

BIBLIOGRAPHY

1. R. W. McKellar, "Taped, Gummed" in M. Bakker, ed., *The Wiley Encyclopedia of Packaging Technology*, 1st edition, John Wiley & Sons, New York, 1986, pp. 631–632; 2nd ed., A. J. Brody and K. S. Marsh, eds., 1997, p. 883.

Cited Publications

1. "Why Natural Paper Tape," FIPAGO, Natural Paper Tapes, http://www.fipago.org, accessed October 2008.
2. *ASTM D5749, Standard Specification for Reinforced and Plain Gummed Tape for Sealing and Securing*, ASTM, http://www.astm.org, 2006/Standards.

TAPE, PRESSURE SENSITIVE

R. L. Sheehan
3M Corporation,
Minnesota
Updated by Staff

INTRODUCTION

Pressure-sensitive tape (PSA) can be defined as a continuous flexible strip of cloth, paper, metal, plastic, or foam coated on one side or both with a permanently tacky adhesive at room temperature which will adhere to a variety of surfaces with light pressure (finger pressure) with no phase change and usually available on a roll (1). PSA is used for closing boxes, combining packages, attaching packaging lists, color coding, pallet unitizing, adding carrying handles, splicing, providing ease of package opening, protecting labels, reinforcing critical package components, holding documents, and a variety of other jobs.

The first pressure-sensitive tape was developed in 1925 for paint masking; it had a paper backing and a glue–glycerol adhesive. Today, there are hundreds of specialty tapes available for specific applications in packaging.

TAPE TESTING

As with all package components, tape testing must be focused on the function of that component on the package. An engineering analysis of the package followed by package testing are excellent beginnings. The critical physical properties of the tape can then be chosen, in conjunction with technical input from a reputable tape supplier (2).

One of the most important tape properties is often the strength of the backing. ASTM D3759 is the standard laboratory method for measuring the tensile strength and elongation of pressure-sensitive tapes. Some packages require a tape with very little stretch; others require a relatively high elongation to achieve the desired breaking energy. For many narrow tapes, only the machine-direction

Table 1. ASTM Standards Relating to Pressure-Sensitive Tape

ASTM	Title
D1974	*Practice for Methods of Closing, Sealing and Reinforcing Fiberboard Boxes*
D2860	*Adherence of Pressure Sensitive Tape to Fiberboard at 90° Angle and Constant Stress*
D2979	*Pressure Sensitive Tack of Adhesives Using an Inverted Probe Machine*
D3121	*Tack of Pressure Sensitive Adhesives by Rolling Ball*
D3330	*Peel Adhesion of Pressure Sensitive Tapes a 180° Angle*
D3611	*Accelerated Aging of Pressure Sensitive Tapes*
D3652	*Thickness of Pressure Sensitive Tapes*
D3654	*Holding Power of Pressure Sensitive Tapes*
D3759	*Tensile Strength and Elongation of Pressure Sensitive Tapes*
D3662	*Bursting Strength of Pressure Sensitive Tapes*
D3715	*Quality Assurance of Pressure Sensitive Tapes*
D3811	*Unwind Force of Pressure Sensitive Tapes*
D3813	*Curling and Twisting on Unwinding of Pressure Sensitive Tapes*
D3815	*Accelerated Aging of Pressure Sensitive Tapes by Carbon Arc Exposure Apparatus*
D3816	*Water Penetration of Pressure Sensitive Tapes*
D3833	*Water Vapor Transmission of Pressure Sensitive Tapes*
D3889	*Adherence to Linerboard of Pressure Sensitive Tape at Low Temperature*
D5105	*Performing Accelerated Outdoor Weathering of Pressure Sensitive Tapes Using Natural Sunlight*
D5264	*Abrasion Resistance of Printed Materials by the Sutherland Rub Tester*
D5330	*Specification for Pressure Sensitive Tape for Packaging, Filament Reinforced*
D5375	*Liner Removal at High Speeds from PSA Label Stock*
D5486	*Specification for Pressure Sensitive Tape for Packaging, Box Closure and Sealing*
D5570	*Water Resistance of Tapes and Adhesives Used as a Box Closure*

strength is of importance. For wider tapes, however, the cross-direction strength can be more critical.

Peel adhesion, ASTM D3330, is perhaps the most often quoted adhesive measurement. It measures the force in ounces per inch of width (N/100 mm) required to peel a strip of tape back onto itself (180°) from a stainless-steel surface. Test conditions and rubdown are closely controlled. The relationship of this test to tape functioning correctly on a package is often questionable; the angle of pull for the test is not seen on most packages, and the stainless-steel substrate does not represent package surfaces well. However, for a given adhesive type, the test may be useful as a quality-assurance procedure.

A packaging tape adhesive must have good tack to allow it to adhere to a variety of package surfaces with only a light rubdown. The literature on pressure-sensitive tape includes several methods of measuring the initial tack or "wet grab" of an adhesive. These can be valuable research test methods, but, because most of them use glass or steel as a test surface, it can be difficult to correlate tack test results with the performance of tape on a package.

Tapes are often used on packages where the tape must hold in shear: The Force on the tape acts in parallel with the package surface. One test that can relate to this is ASTM D3654-A, holding power of pressure-sensitive tapes to fiber-board. A $\frac{1}{2}$-in. × $\frac{1}{2}$-in. area of tape is applied to a fiberboard surface (NIST Standard Reference Material). A 1-kg mass is attached to an end of the tape. The test measures the time it takes for the mass to pull the tape from the surface.

ASTM test methods and other standards relating to pressure-sensitive tape are listed in Table 1. Other test methods are published by the Pressure Sensitive Tape Council (PSTC). Tape test methods are workable in both the inch-pound system of units and the SI metric system; physical properties are convertible from one system to the other. The standard widths of tape are a little different in the two systems. The metric replacement widths are based on uniform slitting increments, resulting in standard widths shown in Table 2; these are based on PSTC-71, *Guide for Width and Length of Pressure Sensitive Tape*. Most packaging uses of pressure-sensitive tape will readily allow these metric sizes.

PRESSURE-SENSITIVE ADHESIVES

Pressure-sensitive adhesives are unusual materials because they are are somewhere between the viscous and rubber states at room temperature. They show sufficient liquid-like behavior to deform or flow into contact with a smooth surface under light contact. Yet they must show appreciable resistance to flow duing a separation or debonding process. The main advantage of pressure-sensitive adhesives compared with other types of adhesives is convenience of use. There is no storage, activation, or waiting involved. Often the bond is reversible. The disadvantages of pressure-

Table 2. Common Widths of Pressure-Sensitive Tape

Inch-Pound System (in.)	SI Metric System (mm)
$\frac{1}{2}$	12
$\frac{3}{4}$	18
1	24
2	48
3	72
4	96

sensitive adhesives are as follows: The adhesive strength is low, and they are unsuitable for rough surfaces. They are also expensive in terms of cost per unit bond area. The most well-known type of adhesive consists of natural rubber blended with a tackifier resins and a small amount of antioxidant. Rigid PVC and polypropylene are used exrtensively as backing materials for general-purpose tapes. Plastic films are used in specialized products. Polyacrylates are generally used in high-quality tapes for their better technical properties. The most recent development in pressure-tape manufacture is the hot-melt coating process. Almost all of melt adhesives are based on SIS thermoplastic rubber, mixed with hydrocarbon tackifier resins and oils in substantial amounts and an antioxidant in minor amounts (3).

BOX-SEALING TAPE

The largest use of pressure-sensitive tape in packaging is the closure of regular slotted containers. Figure 1 depicts a typical construction of a box-sealing tape; a plastic film is coated on one side with a pressure-sensitive adhesive. The film may have a release treatment on one side to allow easy removal of the tape from the roll during dispensing. Some film backings also are treated or coated on the adhesive side to increase the bond of the adhesive to the backing; although for a box sealing tape, this is not a critical factor.

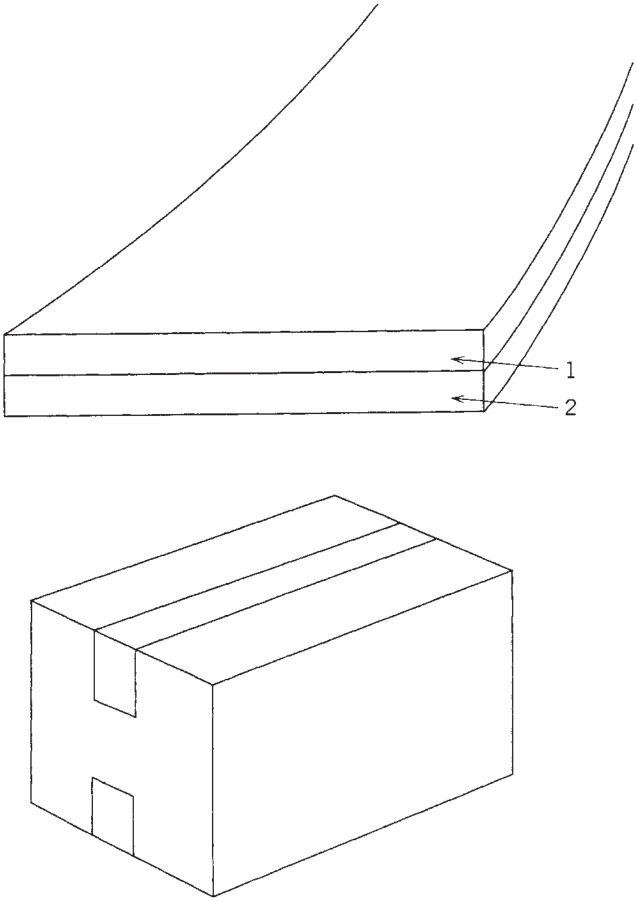

Figure 1. A typical box-sealing tape consists of a backing film (1) and a layer of pressure-sensitive adhesive (2). It is used most often as a closure for regular slotted containers.

The standard application of a box sealing tape is described in ASTM D1974, *Standard Practice for Closing and Sealing Fiber Boxes*. A 2-in. (48-mm)-wide tape is applied over the center seams of a regular slotted container (RSC) and extends about $2\frac{1}{2}$ in. (65 mm) onto the end panels of the box. This seals the center seam and helps keep dust and dirt out of the box. If a total seal is needed, cross-strips of tape can be added at the end edges of the box. This "six-strip seal" or "H-seal" is specified for some military and export packages but is seldom used for domestic shipments.

The choice of tape for box closure is very important and affects the performance of the entire package during storage and distribution. The most common backing material is biaxially oriented polypropylene. Some tape backing is made of a relatively "square" film with the machine-direction and cross-direction properties about the same. Most heavier-duty tapes are made of a tentered film with the cross-direction strength higher than the machine-direction strength; this usually results in better performance on boxes. Polyester, unplasticized PVC, and saturated papers are also used as backings.

A proper backing for a box-sealing tape is a good start, but the tape must have an aggressive adhesive if the backing strength is to be realized. Many box-sealing tapes use an adhesive based on rubber and a tackifying resin, but acrylics and other synthetic adhesive systems are also used. Critical adhesive properties are tack (for production efficiency) and shear-holding power (for package warehousing and shipping).

Tape is applied by handheld dispensers (Figure 2) or with box-sealing equipment. A range of equipment is available for both semiautomatic (operator feeds the boxes into the box sealer) or fully automatic operation. Box sealers are either adjustable to boxes of a single size or random, able to take a mixture of boxes of varying sizes.

Most pressure-sensitive box-sealing tapes hold well in damp and humid conditions. Water resistance (ASTM D5570) is required by the United Nations (UN) and the U.S. Department of Transportation (DOT) for tapes used on boxes containing hazardous materials.

Standard Specification ASTM D5486, *Pressure Sensitive Tape for Packaging, Box Closure, and Sealing*, replaced Federal Specifications PPP-T-60 and PPP-T-76. Type I is a polyester-backed tape used in H-type closure. Type II is a polyester-backed tape used in single-strip closures. Type III is a polypropylene-backed tape used in single-strip closures. Type IV is a cloth-backed tape, and Type V is a paper-backed tape.

FILAMENT TAPES

A second broad category of packaging tape is pressure-sensitive filament tape, sometimes known as "strapping tape." Figure 3 shows that this is typically made of

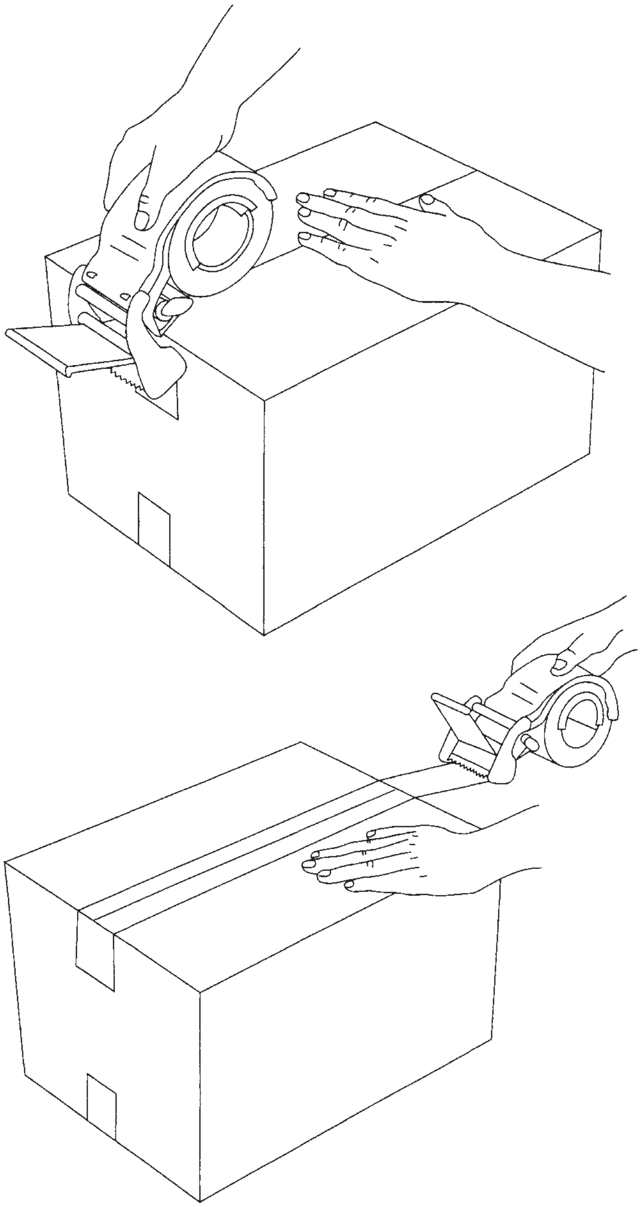

Figure 2. Use of a handheld dispenser for applying box-sealing tape to close RSC.

a film backing (polyester or polypropylene) with reinforcing filaments embedded in the pressure-sensitive adhesive. The most common filament is fiberglass, which provides a high tensile strength with very little elongation. A few tapes have polyester or rayon filaments for extra impact or cut resistance. Tapes are also available with integral polymeric filaments. The adhesive requirements for filament tapes are at least as critical as those of box-sealing tapes. Care should be taken to choose a tape with a balance of tack (initial adhesion) and shear-holding power.

Box closure can be accomplished with filament tape on a variety of box styles. In ASTM D1974, filament tape is recommended for use with boxes with fully overlapping flaps such as a five-panel folder, full-telescope box, or full-overlap box. A high-performance filament tape may be applied in L-shaped strips as small as $\frac{1}{2}$ in (12 mm) wide by $4\frac{1}{4}$ in. (105 mm): two in (50 mm) on each side of the L-clip. A tape with lower tensile and adhesive properties may have to be used in $\frac{3}{4}$-in. × $6\frac{1}{4}$-in. (18-mm × 155-mm) L-clips for equivalent performance on a box.

Filament tape is used in dozens of other packaging applications where high strength is required. These include reinforcing boxes, combining boxes for shipment, bundling, recooperage, and pallet unitizing. Special filament tapes are available for use directly on appliance surfaces to hold doors and drawers in place during shipment.

Standard Specification ASTM D5330, *Pressure Sensitive Tape for Packaging, Filament Reinforced*, replaced Federal Specification PPP-T-97. It includes four classes of filament tape: Type I—cut-resistant, Type II—medium-tensile-strength, Type III—high-tensile-strength, and Type IV—high-tensile-strength, weather-resistant. Other grades of filament tape are also available for industry, institution, and home use.

SPECIALTY TAPES

With a full choice of films, papers, and foils for backings, along with a wide range of adhesives available, it has been

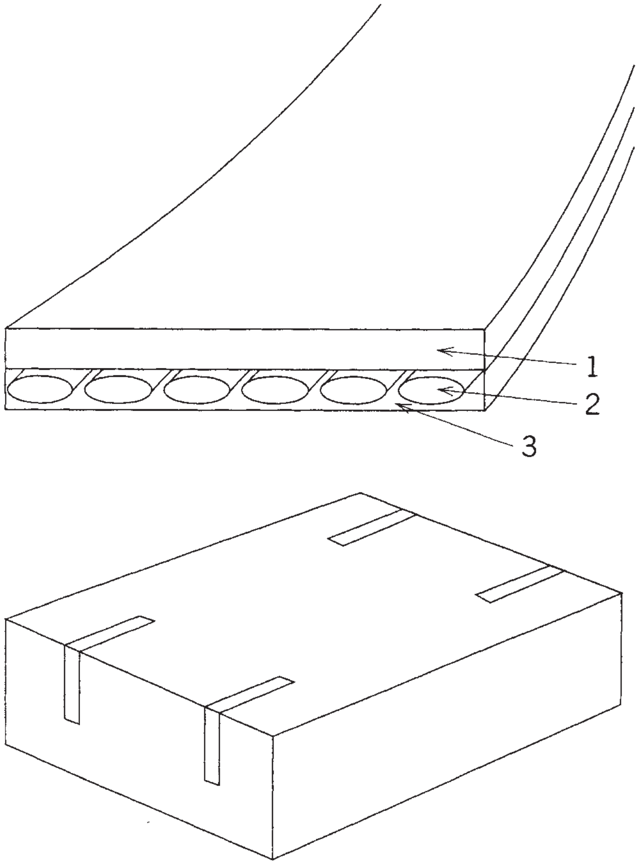

Figure 3. A typical filament tape has a backing film (1) and filaments (2) embedded in a pressure-sensitive adhesive (3). One of the uses is the L-clip closure of full-overlap boxes.

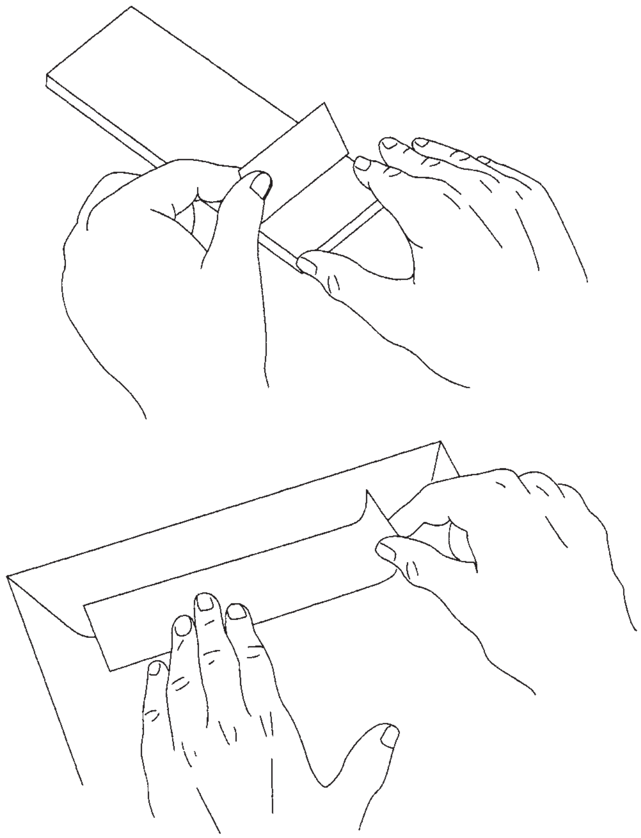

Figure 4. Use of a pressure-sensitive tape from a pad to close a mailing envelope.

possible to develop special pressure-sensitive tapes for many packaging uses, including combining and tamper evidence. Tapes are used to attach and protect labels on packages. Tape pouches often enclose packing lists and documents for shipment (see also Tape, gummed).

Several tapes are available not only on traditional rolls but also in precut pads (Figure 4). These pads provide for the use of presized pieces of tape for covering labels, attaching documents, and closing packages. They do not require a dispenser and offer the advantage of portability.

ENVIRONMENTAL CONSIDERATIONS

The environmental considerations for tapes applied to boxes are given in ASTM D1974. Pressure-sensitive tapes are often a good method of source reduction, considered to be a primary objective in reducing the contribution of packaging to municipal solid waste. Box-closure tapes often use less materials than alternative closures. Small L-clips of tape can close folding cartons, replacing a shrink overwrap and reducing material usage.

Compatibility with recycling operations for larger package components is important. For box recycling, pressure-sensitive tapes do not have to be removed from corrugated boxes prior to recycling operations. When a tape has a water-resistant tape backing, the adhesive stays with the backing in the hydropulper. The tape is easily removed intact by normal pulp-cleaning processes; neither the recycling paper nor recycling water is contaminated by the tape. When corrugated boxes are recycled, film-backed box sealing tapes do not hinder box recycling: The PSA tape stays with backing and is easily removed (4).

Stretchable LLDPE tapes are available for pallet unitizing, offering source reduction from full stretch wraps. When the tape is used in conjunction with stretch wrap, it is compatible with the stretch-wrap recycling operations (see also Recycling; Environmental laws, International and North America).

Pressure-sensitive tape is a versatile packaging material that can offer cost savings, productivity improvements, and source reductions. Innovations beneficial to packagers will continue.

BIBLIOGRAPHY

R. L. Sheehan, "Tape, Pressure-Sensitive" in *The Wiley Encyclopedia of Packaging*, 2nd edition, John Wiley & Sons, New York, 1997, pp. 883–887.

Cited Publications

1. *Pressue Sensitive Adhesive Tape,* Pressure Sensitive Tape Council, Chicago, May 2008.
2. *Test Methods for Pressure Sensitive Adhesive Tapes*, 15th edition, Pressure Sensitive Tape Council, Chicago, 2007.
3. D. W. Aubrey, "Pressure-sensitive Adhesives" in D. E. Packham, *Handbook of Adhesion*, John Wiley & Sons, Chichester, 2005.
4. T. Jensen, *Packaging Tapes: To Recycle or Not,* Adhesives and Sealants Council, April 1999.

TESTING CONSUMER PACKAGES FOR MARKETING EFFECTIVENESS

Lorna Opatow
Opatow Associates, New York,
New York

Primary and secondary packaging techniques are the key to marketing success in bringing brands from production, through distribution and selection by end users, and in generating the levels of satisfaction that warrant repeat purchase. Survey research is used to help those involved in package development make the informed choices that result in a marketing success.

Many package-performance dimensions can be measured in the laboratory. Characteristics related to marketing effectiveness need to be evaluated by users and potential users of a brand—preferably before the package is put into production. A variety of marketing research methods is used for this evaluation.

MARKETING RESEARCH OPTIONS

Most research options fall into three broad categories:

Analysis of existing information
Original qualitative research
Original quantitative research

Analysis of Existing Information. An analysis of existing information is often undertaken at the start of a package development program. It can be an important first step because it assures that subsequent surveys will add to, rather than duplicate, information.

The information is drawn from public sources such as government, trade groups, and publications; from past studies completed within the organization (especially tracking studies which reveal changes in consumer behavior); from syndicated surveys (sponsored and conducted by a research company that sells the results to any company willing to pay for the information); and from customer- and consumer-contact records. (In large packaged-goods companies, consumer-contact information is available daily, and it is often the first clue to product and packaging problems, changing consumer concerns, deficiencies in instructions for use, etc.).

The information obtained is summarized and analyzed in a report that contains conclusions about the nature of the market and recommended packaging objectives—criteria or goals that the package must satisfy. The objectives guide the development program and are used as standards for judging packaging effectiveness.

Qualitative Research. When people talk about "qualitative research," they are referring to studies among small samples of current and/or prospective users of the brand. These people are interviewed in depth, either individually or in a group. The research is diagnostic, that is, exploratory or directional, and its purpose is to obtain early indications of packaging problems and opportunities.

In the individual interviews, one person is questioned at a time using a predetermined question guide (list of subjects to be covered), or a questionnaire that includes mostly open-ended, rather than closed-ended, questions. ("How do you feel about the New York subway system?" is an open-ended question. An example of a closed-ended question is "Compared with other forms of public transportation, do you think the New York subway system is better, about the same or not as good?").

The group interview is called a "focus-group session" and is conducted with 8 to 10 people. Questioning is in the form of a discussion that is led by a trained leader or moderator who covers subjects listed in a predetermined discussion guide. Each of these qualitative research techniques has certain advantages:

During individual-depth interviews, information is obtained, and feelings are explored in detail. Each person expresses his/her opinions and interpretations without reference to the ideas of others so there are clear indications of individual preferences and understanding.

Participant interaction in focus group interviews provides a rich, multilayered accumulation of information and feelings about the subject being discussed. Comments made by one person may remind others of points they had not thought of. Each idea expressed suggests other ideas. Normally, the discussion results in a group consensus.

Both approaches are helpful in the early stages of an investigation, or as an aid to informed judgment. Individual-depth interviews are recommended for early trial, or where there are questions about consumer understanding of how a package works, packaging copy, or communication of ideas. Group interviews are recommended to gain insights about a broad range of feelings and opinions, as well as to identify the language or terminology consumers use to talk about the package and product.

Qualitative research is usually used to develop instructions for use, create hypotheses and questionnaires for larger studies, or get initial indications of opinions and ideas about products, packages, or product/package combinations.

Quantitative Research. "Quantitative studies" are conducted to obtain definitive information for decisionmaking. This type of research can take many forms but is characterized by sample sizes where enough people are interviewed, so results can be analyzed using statistical techniques. The interviews may be conducted in person, by mail, online, by computer, or via video. Certain kinds of packaging studies are conducted by telephone, for example, surveys to determine how and where products are stored and used, or to define the target market (the intended buyer/user).

Questionnaires for quantitative studies usually include more closed-ended, than open-ended, questions. The questions are structured to permit various kinds of statistical analyses that will aid in interpreting the results.

PACKAGING EVALUATION

In considering its marketing effectiveness, management is most likely to question the degree to which a package meets three types of goals, and these are the ones most often subjected to some kind of survey research evaluation: functional effectiveness, visual impact (visibility and shelf attention), and communications effectiveness (brand and product identification, and imagery).

Testing Functional Effectiveness. Functional effectiveness is easier to evaluate than the other marketing dimensions. Some aspects can be handled in the laboratory; others, through product-testing techniques such as one-time or multiple-use tests; others, through individual-depth or focus-group sessions, depending on the nature of the product and the package.

With few exceptions, product users can be questioned directly about whether a package is easy to handle, open, close, store, and use, and whether it might protect the contents over a period of time. The sample of potential brand users interviewed should include people who use the product in different ways, those in a mix of age groups (from children through seniors depending on use), people of various ethnic backgrounds, as well as those with a variety of physical characteristics (left or right handed, have smaller or larger hands, etc.).

It is a given that packages must protect the contents. But it is also true that the user must *believe* that the package really does this. The inner, outer and overwrap for many over-the-counter (OTC) remedies, as well as premium food and beauty-aids products are technically unnecessary. However, proposed substitutes intended to reduce packaging costs are often rejected by consumers, primarily because of perceived differences in product protection.

Depending on the nature of the product and package involved, an in-home or at-work trial study may be conducted among people in several geographic areas. Where a totally new packaging concept is being tested, such as the early versions of aseptic containers for foods, the study may be restricted to people in areas closest to manufacturing facilities because the samples have a short storage life.

Those people who agree to try the product are interviewed to obtain their initial reactions about its appearance, anticipated benefits and drawbacks, and general expectations. The product may be tried at that time, or left for use later, with an evaluation sheet to be completed immediately after trial. If needed, follow-up interviews can be conducted by telephone the next day.

Testing the Effectiveness of Graphic Design. Although, the physical package can be evaluated using product-testing techniques such as the ones described above, different approaches are needed to determine the effectiveness of packaging graphics.

Extensive evidence suggests that overall surface designs including words are primary contributors to the marketing effectiveness of a package. If you think of packaging as the environment for a product, it is easier to understand its effect. The tray used for a frozen entrée, the baking pan included in a mix, a plastic or glass bottle, a composite or metal can, a see-through or foil pack; words, colors, illustrations and over-all design of the container or label; all of these factors influence consumer expectations of, and satisfaction with a brand.

In all studies that involve packaging graphics, the physical appearance of the test and competitive packages must be equal. An apparently unfinished mockup or one that is custom finished should not be shown with printed competitive packages. The difference flags the package in a way that biases results. In addition, if the test versions are potential alternatives for an existing package, the sample of people interviewed should include enough current users of the brand to analyze their reactions separately.

In general, graphic design can be evaluated in regard to the following three aspects: visual or shelf impact, communications effectiveness, and aesthetic appeal.

Visual or Shelf Impact. The most elusive and difficult packaging aspect to measure is visual or shelf impact. The questions to be answered include the following:

1. When people shop the product category, does the package call attention to the brand?
2. As people shop for other types of product, is the package creating an in-store presence that will enhance familiarity with the brand?
3. When the buying decision has been made *before* the store visit, does the package make the brand easy to find?

To date, there are no research techniques that fully answer these questions, primarily because visual perception involves a complex relationship between the structure of the eye and the functioning of the mind. For example, seeing is selective. Regardless of where or how the eye moves, people "screen out" elements they consider irrelevant and focus on the familiar. In a visibility test, this familiarity bias usually produces a higher score for the current package than for a new package, and for an established brand than for a new one.

In addition, the effects of demonstrated visual "enhancers" such as high contrast, size, and color density are predictable. This makes it possible to design for the test, which produces an apparent "winner." The most commonly used methods for testing some aspects of visual impact are a shopping test, a T-scope (tachistoscope) or controlled-exposure test, and an eye-movement test of single or multiple packages in a competitive environment. To some degree, all of these techniques are deficient, but the shopping test comes closest to indicating what might happen in a store.

In a shopping test, a rough approximation of the in-store environment is reproduced with actual packages on shelves in a central interviewing facility, on a videotape, or on a computer screen. The product arrangement is deliberately structured to give all the test brands an equal opportunity to be noticed, and study participants are free to look at what interests them and to ignore what does not.

Where an actual product display is used, people can "shop" the shelves and view the packages in motion at their own pace. They can pick up and examine packages to gain more information about the brand. Whereas shopping tests using videotape and computer simulations are easier to administer, they have some drawbacks: people are seated in a quiet room and concentrating, there may be color and copy distortion due to the limitations of photography, and the product display is "framed" so that some of the normal in-store confusion is reduced.

In the controlled-exposure test, the length of time people can view a picture of a package or shelf display is limited. A device called a tachistoscope or T-scope is attached to the lens of a projector. Operating like the shutter of a camera, it controls the amount of time that a picture is shown (in fractions of a second). Each exposure is shown at an increasing amount of time. After each one, people are asked what they saw.

The controlled-exposure method of testing visual aspects of packaging is a speed test. It measures how quickly something is seen, and it has several drawbacks: People are concentrating on a stationary picture that organizes the display, and there may be photographic distortion. For new brands, the interpretation of results is strictly limited to how easily the brand name is read. For established brands the test offers a measure of recognition as well as readability.

T-scope test scores have limited application but can be helpful in cases where pictures must be used. Some examples are as follows: to develop indications of differentiation within a line of products, to test custom-designed containers where several alternative models are being considered, and to provide indications of recognition elements when a redesign is being considered for an established brand.

In an eye-movement test, the respondent controls the length of time the picture will be viewed. A device records where the eye moves and where it stops over the surface of the picture. The results are evaluated on the basis of this record. In addition to drawbacks related to the test environment and possible photographic distortion, this method provides information about where the eye travels but not about what the brain absorbs.

Regardless of the method used, visual-impact scores are rarely used as a basis for accepting or rejecting a package. Packages that score well in a visibility test but do not meet communications objectives are not usually adopted. However, when communications objectives are met but the visibility score is low, a package is often selected, although graphics may be modified to enhance visual impact.

Communications Measurements. Most packaging tests include communications measurements. Designers can predict the visual effectiveness of a package based on their knowledge of the physiology and psychology of seeing. However, they find it more difficult to determine the package's communications effectiveness (the ideas the package suggests about the brand).

Packages have a substantial impact on people's ideas about products and brands. To measure this impact, research methods and exhibit materials used need to be appropriate for the product and the particular packaging design problem, as well as economically feasible. There are many options for testing package communications, and no standard techniques or series of techniques.

Most package communications studies evaluate the brand in relation to competition, and measure several packaging aspects. Some of the more popular approaches are as follows:

1. Experimental design matched samples of potential users are interviewed about one or two competitive brands, as well as the test brand in *one* of the package designs. Questioning and test procedures are identical so that differences in results can be attributed to the different packages. Within this framework, the most often used approaches are as follows:
    a. Brand expectation study, which measures impressions of the brand on the basis of package appearance
    b. Brand trial study, which measures brand and package performance on the basis of a single trial
    c. Location use test which measures brand and package performance in-home or in the workplace on a one-time or multiple-use basis.
2. *Product formulation/structure study*, which treats each package as a separate formulation or structural version of the brand and determines perceived differences.

Aesthetic Appeal. If the purpose of the study is to measure aesthetic appeal, consumers are asked to rank proposed packages in regard to how attractive they are.

CONCLUSION

In addition to standard specifications for conducting useful surveys, the following are the primary requirements for conducting research to evaluate the marketing effectiveness of packaging:

1. The packaging dimensions of interest need to be measurable. Subtle differences in graphic design and some packaging objectives (such as "generate trade excitement") cannot be measured.
2. Study objectives should be stated clearly in writing, related to the packaging objectives, and indicate the kind of information to be obtained and how it will be used.
3. The study plan must be capable of yielding the information specified in the objectives.
4. Action standards should be established in advance. These standards provide a common framework for judging study results by indicating the order of importance of each measurement used and the research criteria to be met.
5. The people interviewed need to be capable of providing meaningful information.
6. Alternative test packages must be equally acceptable to management. If, for any reason, a package cannot be adopted, then it should not be included in the test.
7. Exhibit materials need to be appropriate and equivalent to avoid biasing results.
8. When developing packaging communications information, the tester is measuring how the package influences ideas about the brand. This means people must be asked about the product and brand before any direct questions about the package.
9. Package designers and developers should be involved in the research to be sure that the study plan is compatible with the packaging objectives, to control the appearance of exhibit materials and to add valuable insights in explaining or interpreting test results.

In conclusion, the package is an integral part of most brands and can provide a competitive marketing edge. Successful package development is the result of careful consideration of alternatives. As each packaging decision is made, it narrows the options to be considered at the next step. Survey research assures that choices will result in a package with maximum marketing effectiveness.

TESTING, PACKAGING MATERIALS

Patricia D. Guerra
Marcondes
Duncan O. Darby
Clemson University, Clemson,
South Carolina

INTRODUCTION

The need to test packaging materials and components may arise for a variety of reasons. Maintaining production standards is the most common one. Verifying that the material will perform in a new application might be another. When a problem is identified and the source is unknown, investigative tests, both qualitative and quantitative, are often needed.

It is helpful to think of packaging materials testing as a function of factors such as packaged product class, package component, and package function, as these factors may determine the types of tests necessary. Product protection is a package function that leads to tests such as drop and vibration. Certain package components need to comply with industry-defined dimensional standards. Products such as food, drugs, medical devices, and hazardous materials are highly regulated, so the packages that contain these products are also regulated.

This article is organized by material: plastic, paper (including paperboard and corrugated), metals, glass, and wood. Many other materials are used in packaging, and many containers, which are available, include components made of different materials. An effort was made to include these components and their related testing under the materials discussion.

REGULATORY AGENCIES AND STANDARDS ORGANIZATIONS

In the United States, the Food and Drug Administration (FDA) is charged with safeguarding the quality of products destined for human consumption. There are many ways in which the quality of foods, pharmaceuticals and medical devices can be adversely affected by packaging issues. Packages may not be correctly closed. Tears, holes, and cracks can occur that allow the product and the environment to interact. Packaging materials and components might be a source of indirect additives through the migration of chemicals through the package into the product. The directives guiding packaging of these classes of products are found in the Code of Federal Regulation, Title 21 (CFR 21). It is common for the FDA to recognize standards from consensus-based standards organizations, such as the International Standards Organization (ISO) and/or ASTM International, for the measurement of compliance with these objectives.

When the package function is protection from transportation hazards, the National Motor Freight Classification Committee (NMFC), the Department of Transportation (DOT), and the International Civil Aviation Organization (ICAO) regulate the types of materials that may be used for different product classes and the standards that these materials must meet. The International Safe Transit Association (ISTA) in the United States has a set of standard procedures for testing the performance of shipping containers for a variety of shipping environments and products. ASTM International has developed test procedures that prescribe how testing should be conducted for a variety of properties of a variety of materials used for packaging, including performance during transport. The ASTM technical committee D10 deals specifically with developing standard procedures for testing packaging materials and components. Other ASTM International technical committees also have jurisdiction over areas of interest to packaging professionals in terms of testing, such as committee F02 on flexible barrier packaging and committee D06 on paper and paper products. The Technical Association of the Pulp and Paper Industry (TAPPI) also offers standard procedures for testing pulp and paper materials, including paperboard and corrugated. In some cases, there is some overlapping in standards from ASTM, TAPPI, and ISO. It is up to the packaging professional to identify the one that is mostly accepted by his or her sector of the industry.

In addition to the already mentioned federal regulatory agencies, packaging professionals must also be aware of state and even local regulations. Because regulations change over time and from state to state and country to country, it would be impractical to cover every one in an encyclopedia. This article attempts to make the reader aware that these exist and that every packaging professional should be familiar with the ones that pertain to his or her sector of the industry and distribution cycle.

PLASTICS

Plastics are widely used in flexible, semirigid, and rigid packages. Polymer films are used alone or in multilayer structures in the form of bags, pouches, and overwrap films to name a few. Rigid plastic containers are also common in the form of jars, drums, pails, jugs, bottles, trays, and others. Foamed polymers may be used for protection against drops and vibration and for temperature control. Woven plastic fibers are used in large packages of relatively heavy products, such as dry pet foods and industrial goods. Nonwoven fibers are a common component of medical device packaging.

Several fundamental plastics properties are used to characterize and compare plastic materials used in packaging applications. This includes thermal transition properties, such as the glass transition temperature (for amorphous and semicrystalline plastics), and the melt point (for semicrystalline plastics). For semicrystalline plastics, the percent crystallinity may also be estimated.

Measurement of these properties is best conducted with thermal analysis equipment such as differential scanning calorimetry (DSC). Other thermal analyses, including thermo-gravimetric analysis (TGA), thermo-mechanical analysis (TMA), and dynamic mechanical analysis (DMA), may also be used to characterize how plastic behavior changes with temperature. Melt flow properties, such as melt flow indices, melt flow rates, melt viscosities, melt strength, and so on, are predictors of performance on package-manufacturing equipment, as well as of performance in the field.

Datasheets that include the basic characteristics of films and other flexible plastics are available from suppliers and include basic information such as yield, gas-barrier properties, gauge, tensile strength, optical properties, and dimensional stability. Table 1 lists some of the more common properties of flexible plastic materials. Most of these properties are discussed in detail in other sections of this encyclopedia. Properties of multilayer materials are also included in Table 1.

It is important to test the properties in Table 1, because they have a direct influence on how the individual materials will perform as part of a package system. This includes how a material will work on the machinery that converts it into a package, and how it will interact with the product it contains.

The weights of substrates, coatings, inks, adhesives, and sealants are usually measured on a certain size specimen, and the overall weight is extrapolated from that. Weight is often measured per area of flexible substrates, and the term used for this is basis weight. The basis weight is usually specified for the product to perform the desired function.

Table 1. Flexible Plastic Material Properties

Weight (coatings, adhesives, and sealants)

Thickness (gauge)

Adhesion (adhesive to substrate, inks to substrate, extrudate to substrate, coextruded layers)

Strength

- Tensile
- Puncture
- Tear resistance
- Burst resistance
- Impact resistance
- Flex resistance

Surface

- Surface energy (contact angle)
- Friction [coefficient of friction (COF), film to film, and film to steel]
- Abrasion

Visual/optical

Gas barrier (transmission rates)

- Oxygen
- Water vapor
- Carbon dioxide
- Nitrogen
- Flavors/aromas

Organoleptic (retained solvents and other volatiles)

Shock and vibration Transmission (foams)

The uniformity of a substrate's thickness is important. A lack of uniformity may lead to variations in other test results, such as permeation rates and tensile strength, and it may interfere with performance on the packaging line or in the field. A certain amount of variation may be accepted. Several measurements are taken and values are averaged.

For multilayer applications, the strength of the adhesion between layers is evaluated to make sure that the layers will hold together for the intended applications. The force necessary to separate the layers is measured and compared with the minimum specification for the application.

Knowledge about the strength properties such as tensile, puncture, tear, and so on are helpful in selecting materials for flexible packaging. This selection is based on application and hazards that the product is likely to encounter in its lifecycle. Actual data from these tests doesn't always apply directly to an application, but it may still prove helpful in comparison of materials.

Surface properties impact the ability of materials to stick together and flow over machinery. For finished packages, these properties impact the stacking stability. Minimum treatment levels are specified for materials used in printing and laminating applications. Films may not track well on packaging machines when the coefficient is too low or too high. Large bags of products such as pet food or industrial products must meet a coefficient of friction range to prevent sliding when stacked.

The outside of packages is often part of the marketing effort for a product. Therefore, the aesthetic appearance of materials is important. Visual properties such as gloss can add value from a marketing perspective. Print quality is another important factor that is measured and tracked in various ways all the way from the printing plant to the store shelf. There are regulations on type size and legibility for certain information communicated to the consumer in industry sectors such as food and drugs. Colors can also be measured. Many of these properties are measured using the naked eye, or instrumentation, or both.

Opacity is also a visual property of materials. The amount of light transmitted through a packaging material may accelerate deteriorative reactions in food products, for example. There is more than one way to express opacity. It may be done in terms of optical density or light transmittance. Metalized materials are often compared based on these parameters.

It is often necessary to control the atmosphere within a package. For example, too much or too little oxygen impacts the shelf life of many perishable products. Thus, the tendency of gases to move through the package materials must be understood and measured. The most common permeants are listed in Table 1. Please see the permeability section of this encyclopedia.

Organoleptic tests involve qualitative and quantitative tests to verify that packaging materials or their additives do not adversely affect the flavor of products. Panels of humans trained to detect solvent odors are routinely used to evaluate packaging materials as they are made. Food companies often use sensory panels to study product/

package flavor interactions. These activities are typically combined with analytical instrumentation such as gas chromatography, microbial analysis, color measurement, and so on.

Foams placed inside or outside of primary packages protect by absorbing part of the energy of an impact. Different densities of foam and different materials (polystyrene vs polyethylene, for example) offer different levels of protection (see Cushioning, design section for more information).

Table 2 includes a selection of tests that are commonly performed on packages to evaluate their performance. In addition to these, some properties of the resins such as melt index and flow rates are also measured.

In most plastic packages, the closure system is essential to the package's performance. Closing the package assures that the package is allowed to perform its functions, by keeping the product within the package and also preventing exchange of the package's atmosphere with that of the outside environment. In many plastic packaging applications, closure is achieved by creating a thermoplastic seal. The seal strength can be measured to help predict the ability of the package to survive its lifecycle and to assess the force or energy required to open the package. In the hot tack test, the seal strength is measured immediately after the seal is made to predict the ability of the packaging material to contain the product when it is hot. This property is useful in predicting performance on the packaging machine or in cases where the product is filled at an elevated temperature. See section Seal, heat for more detailed information.

Other tests may be needed to verify that the package was successfully sealed throughout the seal perimeter and that it will not leak or open prematurely in the distribution cycle. Tests used for seal integrity include burst tests, dye leak tests, pressure or vacuum decay tests, and many others. Simulated or actual shipping tests may also be run, either as a standalone method to check the package integrity or to verify that the seal integrity tests chosen correlate to reality.

Burst tests on packages may be run not only for seal integrity testing but also to verify that the package has the strength to be stacked and dropped in the distribution system.

Table 2. Container Properties (Rigid and Flexible)

Sea
- Hot tack
- Seal strength
- Integrity (cracks, tamper evidence, child-resistant features)
- Burst

Barrier
- Oxygen
- Water vapor
- Carbon dioxide
- Nitrogen

Dimensional consistency and stability

Chemical resistance

Stacking strength

Dimensions, dimensional consistency, and dimensional stability of packages are important for space usage, processibility on packaging machines, and for aesthetic considerations. Packages must consume the correct amount of space when stored, shipped, and on the shelf in the marketplace. Internal dimensions must be consistent to assure that the net weights or volumes on packages are correct. Automated packaging machines often require specific tolerances on the package dimensions to facilitate the desired productivity. Dimensional stability must be maintained during thermal processes, such as retorting and autoclaving. Packages must resist deforming dimensionally to assure that the packages remain closed and present an attractive marketing message to the consumer.

Chemical resistance is an important consideration and is one of the reasons that we find chemicals packaged in several different packaging materials. The packaging materials must offer chemical resistance to the components of the product as well as from any outside elements that might come in contact with the package.

When a package is designed with the expectation that it will bear some or the entire load in a stacking situation, that package must be evaluated for its stacking strength. In many cases, the products can bear the load.

PAPER, PAPERBOARD, AND FIBERBOARD

Paper is used as a layer in multilayer structures (some of these are various layers of paper, others include coatings, films, and foils) and it is also used on its own. Paperboard is converted into cartons and boxes that can function as primary, secondary, or tertiary packages.

Corrugated fiberboard is made of linerboards and a corrugated medium. Once it is converted into boxes, it is required to carry a box manufacturer certificate listing the burst strength or the edge crush test (ECT). Both certificates also list the size limit and gross weight limit. Another common use for corrugated in packaging is trays (Table 3).

Table 3. Materials and Container Properties

Basis weight

Strength
- Tensile
- Tear resistance
- Puncture resistance
- Burst (mullen)
- Edge crush (corrugated fiberboard)
- Flat crush (corrugated fiberboard)
- Folding endurance
- Structural design performance (finished containers)

Moisture resistance

Permeability (body of composite cans)
- Oxygen
- Water vapor

Like plastic materials, paper and paperboard are often specified and ordered in terms of basis weight, so this test can confirm that the material at hand conforms with the order, for example.

As with other packaging materials, the strength properties of paper, paperboard, and corrugated are important for matching the materials to the packaging application being considered. For example, the results of a tear resistance test are an indication of how a material might perform in an application that requires windows or other cutouts.

The burst resistance test is done to find a board's ability to withstand external and internal pressures. It is not considered the best way to evaluate double- or triple- wall corrugated boards. Flat crush is used to evaluate those boards.

Structural design performance tests evaluate the ability of the erected container to perform from the time it is put together to when it reaches the ultimate user. These tests are designed to simulate various shipping and distribution cycles in terms of shock, vibration, and compression A container might be exposed to moisture in several ways. It may come from the outside as rain, or it may come from the packing environment in the case of washed vegetables for example. Depending on the application, it is important to measure the impact of moisture on paperboard and corrugated fiberboard properties to assure that they will perform correctly for the packaged product and distribution environment.

METALS

Steel and aluminum are used to make containers and components, such as cans, drums, trays, and caps. Steel cans are widely used in applications such as processed foods, chemicals, and paint. Steel containers and container components such as caps are also found in packaging systems for foods, cosmetics, consumer goods, and industrial goods. Aluminum is used in the form of foil (less than 0.006 in. thick), as a layer in multi-layer structures, and as trays in frozen foods and preserves. It is also converted into cans and bottles used for beverages, food, and cosmetics. Metalized materials are produced by vacuum deposition to create a thin light and gas barrier onto substrates or formed packages.

Metal for packaging uses often begins in the molten form. Then, it is cast into either ingots or thick sheets. Ingots will subsequently be rolled into thinner strip metals in the hot rolling process and wound into coils. Cast metal sheets are rolled into coils as a part of processing. More reductions in thickness are achieved by cold rolling. In the case of foils, the rolling will continue down to thicknesses around 6 microns. Rigid metal packaging such as cans are made from either coils or cut sheets.

Although steel packaging is mostly iron and aluminum packaging is mostly aluminum, other alloying metals at varying concentration actually provide many properties we depend on for packaging applications (Table 4). Additionally, processing has a significant effect on the grain structure of metals, which also have a significant effect on the final package properties. Thus, effective measurement of metal properties may include the measurement of concentration and of grain size measurement.

Table 4. Materials and Container Properties

Chemical makeup of alloy
Grain size
Basis weights
Thicknesses
Coating/plating basis weights
Adhesion of coatings/platings
Strength
- Tensile
- Stacking strength
- Hydraulic pressure strength

Package integrity
- Pinholes
- Weld quality
- Leak testing
- Permeability

Visual/optical
- Surface reflectance
- Aesthetics

Dimensions

As in all packaging materials, cost is a key factor. Thus, basis weight and thickness are monitored in the production of sheets, coils, and finished metal packages.

The substrate materials may endure processing, such as washing coating and printing, in the sheet form before being formed into packages. In other cases, some of these processes may occur on the shaped package rather than on sheet form. Plating with another metal may also be used for corrosion resistance or for other properties. In each case, it is important to measure the adhesion and basis weights of coatings or platings.

The mechanical properties of these metallic materials, such as tensile/compression strength, are routinely measured in the production and use of metals. As in plastics, these properties can serve as either direct measures of predicted performance, or as relative measures for comparison. Most metal packaging is formed at temperatures that are relatively low compared with the metal's melting point. Thus, it is important to understand the ductile properties of the metals used. Measurement of formability and ductility properties, beyond those found in the tensile test, may be required. For example, Rockwell hardness testing can be used with evaluate the temper of steel cans. Denting of cans is considered to be a defect in some cultures, and it can reduce the can's axial strength, so denting resistance may also be measured. Many cans are subjected to significant pressure "events," such as sterilization for canned foods or the pressure effects of containing carbonated beverages. Pressure testing is required to assure that the package can withstand these events.

Some cans are rolled pieces of sheet that are welded together at the overlap of the metal, which is called the seam. Cans are inspected to make sure that the seams are hermetic to ensure the sterility of the product. For a variety of reasons, the casting and rolling processes can result in tiny holes in the aluminum sheets or foil. These holes, which are referred to as pinholes, can be viewed by the naked eye or by using automated optical comparator systems. Leak testing systems are also used to verify the integrity of cans. Most metals are largely impenetrable by most common permeants. Thus, metals are used in cases where absolute barrier is needed. However, thin-gauge aluminum foils (below 20–25 micron) may have pinholes present, and metalized films seldom have sufficient metal for an absolute barrier to exist. In these cases, gas barrier permeability evaluations can be conducted.

As with other packaging materials, the visual appearance of metallic packaging is sometimes an important factor. Because metals can be highly reflective, reflectance values are sometimes specified. Metallic packaging is often printed, so print quality is also an important property. Metalized films are tested for optical density and/or light transmission to ensure the needed opacity has been achieved during the metallization process.

Dimensions for metal cans and bottles are important to assure proper space consumption, proper filling capacity, and processibility on high-speed filling lines. Metal caps for bottles, jars and cans also have to conform to dimensional requirements for the filling and capping process to occur at the speeds required by the production equipment, as well as to assure that the package is hermetic.

GLASS

Bottles, jars, and jugs and ampoules made of glass are used in the industry for food and pharmaceutical packaging. Glass packaging is usually formed directly from the molten raw materials into the package. This means that material testing generally must be conducted on the package itself rather than on a sheet or resin pellet as is an option in papers, metals, and plastics. Most standards have to do with maintaining production quality and dimensional consistency (Table 5).

Glass properties are dependent on the composition. Appropriately equipped analytical laboratories can determine this, but in glass manufacturing plants, density and softening point can be substituted for a full analysis.

Strength in glass is not typically measured using a tensile strength as in most other materials, because it is extremely strong but extremely brittle. Compressive strength measurements of glass result in much higher strength values than tensile strength measurements. Glass packages generally break at lower values than the theoretical expectations because of small cracks on the surface that serve as stress concentration points. Online application of pressure, at squeezing stations on glass package-making lines, is used to prevent cracked, broken, or weak packages from advancing into the process. Internal pressure resistance is an important property of glass containers, which will endure pressures such as sterilizing in the package and carbonation. The compressive strength of glass packages reflects their ability to support the load in stacking systems and when closures are applied. It is generally addressed during the design stage by selecting appropriate neck and body diameters and shoulder radius. The heel design of containers can also improve strength.

Table 5. Materials and Container Properties

Composition
- Composition
- Density
- Softening point

Strength
- Compressive
- Stacking strength
- Hydraulic pressure strength
- Impact strength

Thermal shock

Visual/optical
- General visual quality
- Clarity
- Color

Dimensions
- Container weight
- Wall thickness
- Finish dimensions
- General dimensions

Permeability

Thermal shock is a measure of glass' tendency to crack under heat. This is important for hot fill, retorting, and applications in which the product is heated in glass by the consumer to be served. Finite-element analysis is used to model this.

Glass is often used for its superior optical properties. Thus, measurement of these properties is important. On glass production lines, automated inspection stations are used to verify that the containers are free of sand, dirt, stones, and other visual defects. Clarity and color, and the consistency of both, are important in glass manufacture and use. When printed or when graphics are formed into the glass surface, the appearance of these aesthetics also needs to be measured.

The containment capability of a glass container is dependent not only on the properties of the particular glass formula but also on the thickness of the container walls. Additionally, the total weight of each container must be measured and controlled to assure consistency of cost, performance, and fill weights. The finish dimensions must be consistent to assure that the cap/closure system fits properly, offers correct opening strength, and provides an appropriate seal of the package.

Glass offers excellent water vapor and gas-barrier properties. When pigmented, it provides light control as well.

WOOD

Wood is an important packaging material that is specifically used for pallets, crates, and boxes used in transport packaging. A limited amount of testing is conducted on the wood materials themselves, but in the construction of wood packaging, moisture content and shrinkage properties are specified. In the case of pallets, tensile properties are seldom measured, but compression and flexural properties (strength and moduli) are both important for the application. These are generally controlled through selection of woods that deliver the desired performance at the best cost.

CONCLUSION

Entire books could be written about testing systems for each of the packaging materials/package types outlined above. This article has been written to attempt to briefly describe that what and the why involved in packaging material testing. The reader is encouraged to review the references as well as the individual sections elsewhere in this encyclopedia.

Ideally, the package is developed along with the product and adjustments are made along the design and development stages to provide the best fit between package and product. Packaging is usually a system, so even though testing the individual components is a good starting point, it does not exclude the need to test the package system as whole at every stage of the product cycle from the time it is packaged to its ultimate use.

BIBLIOGRAPHY

ASTM International.

Brockway Glass School, Brockway, Inc., New York, 1987.

A. L. Brody and K. S. Marsh, eds., *The Wiley Encyclopedia of Packaging Technology*, 2nd edition, John Wiley & Sons, Inc., New York, 1997.

W. D. Calister, Jr., *Materials Science and Engineering An Introduction*, John Wiley & Sons, Inc., New York, 1940; 7th ed., 2007.

J. Cavanagh, “Glass Container Design,” in A. L. Brody, K. S. Marsh, eds., *The Wiley Encyclopedia of Packaging Technology*, 2nd edition, John Wiley & Sons, Inc., New York, 1997.

J. Cavanagh, “Glass Container Manufacturing,” in A. L. Brody, K. S. Marsh, eds., *The Wiley Encyclopedia of Packaging Technology*, 2nd edition, John Wiley & Sons, Inc., New York, 1997.

Code of Federal Regulations, Title 21. Office of the Federal Register National Archives and Records Administration, S. S. Government Printing Office. Washington, DC, 1992.

D. Darby, PKGSC 430 Converting for Flexible Packaging – Spring, 2009. Clemson University, Clemson, SC. 2009.

National Wooden Pallet and Container Association. Uniform Standards for Wood Pallets.

Fibre Box Handbook, Fibre Box Association, 2850 Golf Road, Rolling Meadows, IL.

C. Gaynes, “Packaging Materials Packaging,” in A. L. Brody and K. S. Marsh, eds., *The Wiley Encyclopedia of Packaging Technology*, 2nd edition, John Wiley & Sons, Inc., New York, 1997.

Glass Packaging Institute.

J. F. Hanlon, *Handbook of Package Engineering*, McGraw-Hill, New York, 1971; 3rd edition, 1998.

O. L. Heck, “Can Seamers,” in A. L. Brody and K. S. Marsh, eds., *The Wiley Encyclopedia of Packaging Technology*, 2nd edition, John Wiley & Sons, Inc., New York, 1997.

R. J. Hernandez, “Polymer Properties,” in A. L. Brody and K. S. Marsh, eds., *The Wiley Encyclopedia of Packaging Technology*, 2nd edition, John Wiley & Sons, Inc., New York, 1997.

B. Johnson and R. Demorest, “Permeation and Leakage Testing,” in A. L. Brody, K. S. Marsh, eds., *The Wiley Encyclopedia of Packaging Technology*, 2nd edition, John Wiley & Sons, Inc., New York, 1997.

B. Page, *Metal Packaging*, Pira International, UK, 2001.

G. C. Phillips, *A Concise Introduction to Ceramics*, Van Nostrand Reinhold, New York, 1991.

J. E. Shelby, *Introduction to Glass Science and Technology*, The Royal Society of Chemistry, UK, 2005.

G. L. Robertson, *Food Packaging*, *Principles and Practice*, Marcel Dekker, Inc., New York, 1993.

Steel University.

D. Twede and R. Goddard, “*Packaging Materials*,” Pira International, UK, 1998.

S. E. M. Selke, J. D. Culter, and R. J. Hernandez, Plastics Packaging: Properties, Processing, Applications and Regulations, 2nd edition, Hanser, Munich, Germany, 2004.

TESTING, PERMEATION AND LEAKAGE

Bert Johnson
Robert Demorest
MOCON,
Minneapolis, Minnesota

These two factors, permeation and leakage, can have similar effects on packaged goods, but they are totally different processes. When oxygen (O_2), water vapor (H_2O), carbon dioxide (CO_2), odors, and flavors move out of packages or into other packages, quality is lost, and shelf life is shortened.

Great strides have been made in permeation, which is a science relatively unknown to the average citizen, but leakage, a subject familiar to many, seems to be slower in developing a universally accepted testing technology. Testing methods for both permeation and leakage are discussed here.

PERMEATION

In general, three separate phenomena occur simultaneously.

Solubility—penetration into polymer
Diffusion—penetration through polymer
Desorption—evaporation from polymer

The total permeation through the barrier is made up of the sum total of all three parameters, and it is referred to metrically as

Permeation rate—$(\text{mL}\cdot\text{mm})/(\text{m}^2\cdot 24\,\text{h}\cdot\text{atm})$, dry, at (temperature, 0°)
Transmission rate—$(\text{mL}/(\text{m}^2\cdot 24\,\text{h})$, dry, at (temperature, 0°)

Note that the transmission rate (TR) has not been normalized for atmospheric pressure or thickness. The laboratory must decide the best units. However, if the instrument is equipped with a pressure transducer, so that results are adjusted to sea level, then it is common to state the TR

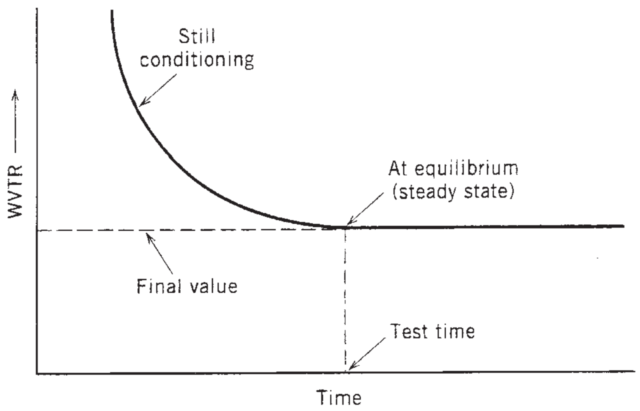

Figure 1. Typical example of time to condition specimen.

value at sea level and is, therefore, easily compared from one laboratory to another.

Equilibration. A sample of barrier film is mounted in a permeation instrument test cell and the test is started. Note the time data in Figure 1. The results of a test are valid only once the barrier material has reached equilibrium.

- Material thickness
- Relative humidity
- Temperature
- Time
- Barometric pressure

The time for the sample to reach equilibrium cannot be appreciably accelerated or shortened. Time is a physical function of the material. The better the barrier, the longer it takes to get results. For example, 1 mil (25 μm) PET takes 1 h, whereas 5 mils (125 μm) PET takes 8 h to stabilize. If the result is taken prematurely, it will be wrong, as steady state has not yet been reached.

Five major factors that affect permeation rate through a barrier polymer are listed in Figure 2.

- Material thickness
- Relative humidity
- Temperature
- Time
- Barometric pressure

Figure 2. Five major factors affecting permeation rate.

PIONEERING METHODS

We must acknowledge some of the pioneer work in the field of permeation, in particular the water-vapor permeation cup test (1, 2) (see also Figure 3) developed in the early 1940s. These test methods determine the loss of water from a cup through a barrier sealed on top of the cup and are still used in a few locations. Permeation does have disadvantages, such as a long time to obtain results (days vs. hours), limited testing range, being labor intensive, requiring expensive climate-control chambers, and being operator dependent. However, steady progress has been made in instrumented testing systems that allow shorter test times, greater limits, better repeatability, increased sensitivity, computerized control, and documentation.

Also, recognition is due to other early developments as listed in ASTM D1434 (M) on the manometric cell (also known as the *Dow cell*) and ASTM D1434 (V) on the volumetric cell. These were gallant attempts, but are no longer in widespread use.

CURRENT METHODS

Oxygen Transmission Rate (O_2TR). Oxygen is often referred to as the “thief” of flavor, texture, color, nutrition, and shelf life. The importance of testing O_2TR was recognized early in the development of barrier materials such as coated papers and plastics. The coulometric sensor (also known as the coulox sensor) soon dominated because it could detect O_2 down to the parts per billion (ppb) level, was stable, and was easy to maintain and reliable.

Initially only “dry” tests were performed, 0% rh, which was adequate for many of the barriers of that day. However, subsequent barrier materials were developed that had superior O_2 permeation characteristics, but the O_2TR of these new materials was a function of humidity.

Oxygen permeation testing has advanced in capability to allow testing of the most recent developments in barrier materials. The ability to control the percent relative humidity (% rh) independently on each side of the barrier has been one of the most significant advancements. This allows a better simulation of true-to-life shelf conditions and, therefore, more credible results.

The effect of % rh and temperature on O_2TR can be observed in Figures 4 and 5.

Performance expectations are important. The measurable range of O_2 transmission rates is 0.001 mL/($m^2 \cdot$ day) to over 1,000,000 mL/($m^2 \cdot$ day). The following list is specifications on Ox-Tran systems,[3] as used in ASTM D3985 and F1307:

Sensitivity—films, 0.01 mL/($m^2 \cdot$ day) [0.0006 mL/(100 in.$^2 \cdot$ day)]; packages, 0.00005 mL/package $\cdot$ day)

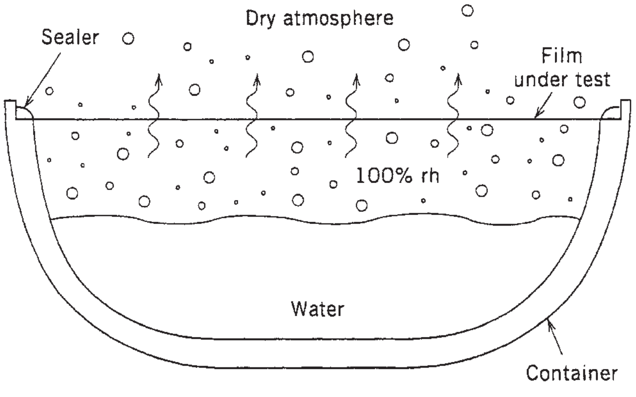

Figure 3. Wet cup test.

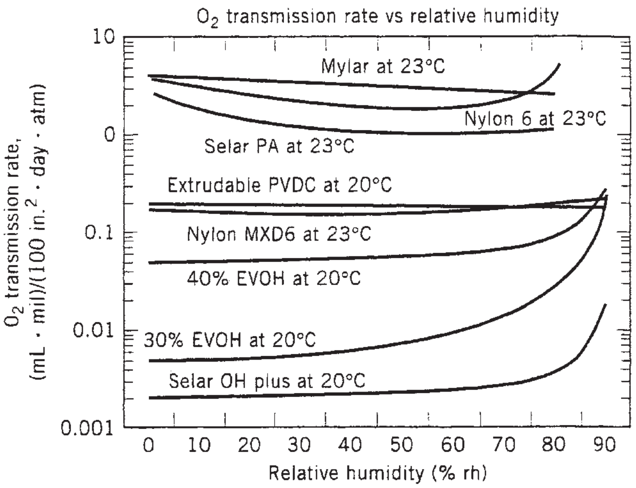

Figure 4. Effect of relative humidity on O_2 transmission rates of several plastic films.

Repeatability—films, ±0.05 mL/(m^2 · day) [0.003 mL/(100 in.^{2} · day)] or 1% of reading; packages, ±0.00025 mL/(package · day) or 1% of reading

A new high-sensitivity method and apparatus now makes it possible to attain the following specification:

Sensitivity—films, 0.001 mL/(m^2 · day) [0.00006 mL/100 in.^{2} · day)]; packages, 0.000005 mL/(package · day)

Repeatability—films ±0.005 mL/(m^2 · day) [0.0003 mL/(100 in.^{2} · day)] or 1% of reading; packages, ±0.000025 mL/(package · day) or 1% of reading

The importance of temperature control cannot be over emphasized. Relative humidity is a function of temperature, and to control % rh is not an easy task because it can vary by 5% rh/ °C in a region of the test.

Measuring High O_2TR Values. At first, all efforts were directed toward low permeation readings (high barriers). An emerging need also exists to measure *high* O_2TR values. Initially, the use of a mask (to decrease the permeation test-cell area) was used for years. As higher O_2TR were required, new test techniques were developed to yield more repeatable results and to keep the O_2 sensor from swamping. With care, values of ≤155,000 mL/(m^2 · day) can be measured. So the measurable range of O_2TR is 0.001 mL/(m^2 · day) to over 155,000 mL/(m^2 · day).

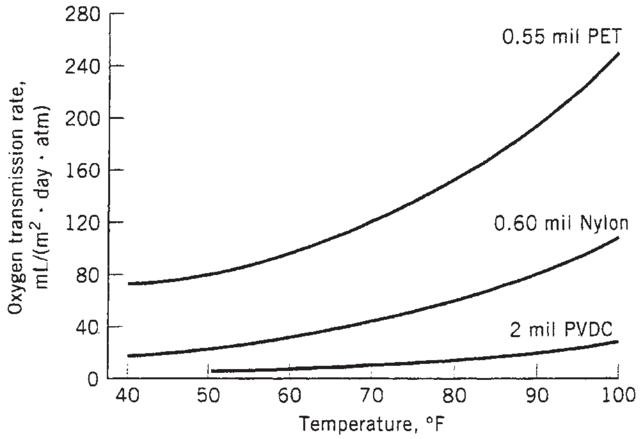

Figure 5. Effect of temperature on O_2 transmission rate of 0% rh for several plastic films.

The following international test methods, as shown in Figure 6, were written around the use of the coulox sensor for oxygen and the infrared method for water vapor, which makes it possible for laboratories in different parts of the world to compare O_2TR and water vapor transmission rate (WVTR) test results.

Water-Vapor Transmission Rate. After the cup test, instrumented systems (ASTM F372, F378, TAPPI 378), and infrared (IR) systems were developed that achieved results in a shorter time (hours vs. days). Comparison of WVTR using the IR method and the cup test revealed remarkably similar results. Today, it is estimated that 95% of WVTR testing in the United States is done using ASTM method F1249 and TAPPI method T557 pm-95.

It was standard practice, at one time, to run all WVTR tests at a given rh, (e.g., 100% rh). Then, if the WVTR at another % rh was desired, then one would simply multiply the 100% rh results by the % rh of interest. For example, the 100% rh result was multiplied by 0.8 if a result at 80% rh was of interest. This was done because there was no convenient, clean method to generate precise % rh values.

The results using this technique, called *factoring*, can be observed in Figure 7.

Notice the excellent correlation between these two methods of creating the driving-force RH. The test results from four common packaging films were almost identical, no matter whether the actual rh was created with salts or distilled water, and the result then factored.

Considerable advantages have been obtained with factoring, including

1. Elimination of messy, uncontrollable salt solutions
2. Greatly reduced possibility of instrument corrosion
3. Increased ease of equipment operation

This method of testing without salts is widespread today. By about 1990, however, it became apparent that this technique may not work for all barrier materials, most notably hydrophilic polymers. In these cases, water vapor is so soluble that the "factoring" relationship does not

Oxygen (coulometric method)			
ASTM	D3985	Films	North and South America
DIN	53380	Films	Europe
JIS	K7126	Films	Asia
ASTM	F1307	Packages	North and South America
Water vapor (infrared method)			
ASTM	F1249	Films	North and South America
JIS	K7129	Films	Asia

Figure 6. International standards for permeation and transmission-rate testing.

All values are g/($m^2 \cdot$ 24 h) at 37.8°C (100°F)		WVTR value using zinc sulfate salt to create 84.5% rh	WVTR value using distilled water to create 100% rh, then factored by 0.846	% DEV
Polyethylene	#1	11.2	11.2	0.0
1.9 mils (48.3 μm)	#2	12.1	12.3	1.7
Polypropylene	#1	9.61	9.58	−0.3
1.8 mils (45.7 μm)	#2	9.85	9.67	−1.8
Polyester	#1	21.1	21.8	3.3
0.92 mils (48.3 μm)	#2	21.3	21.6	1.4
Saran Wrap 8	#1	7.06	7.32	3.7
1.0 mils (25.4 μm)	#2	6.80	6.99	2.8

Figure 7. Comparison of four films "factored" with 100% rh vs tests with a saturated salt solution of zinc sulfate. (Saran Wrap is a registered trademark of Dow Chemical USA.)

seem to hold true. Nylon 6 is a good example of this (see Figure 8).

As can be observed, factoring does not work for all barriers. Therefore, a system was developed that is more universally applicable by creating humidity and temperature test conditions close to actual shelf conditions of the package. The advantages are as follows:

1. Tests can be conducted close to actual shelf conditions.
2. A range of RH values is available.
3. Relative-humidity values easily changed.
4. No mess.

The water-vapor transmission rate is expressed in g/($m^2 \cdot$ day), or g/(100 in.$^2 \cdot$ day). The measurable range of WVTR is 0.0001 g/($m^2 \cdot$ day) to 1000 g/($m^2 \cdot$ day). The specifications of some WVTR systems are as follows:

Sensitivity—films, 0.0001 g/($m^2 \cdot$ day) [0.000006 g/(100 in.$^2 \cdot$ day)]; packages, 0.000001 g/(package · day)

Repeatability—films, ±0.002 g/($m^2 \cdot$ day) [±0.00015 g/(100 in.$^2 \cdot$ day) or 1% of reading; packages, ±0.00 001 g/ (package · day) or 1% of reading

Carbon Dioxide Transmission Rate (CO_2TR). An IR sensor is used to detect CO_2, and when incorporated in an instrument system to detect permeation, it yields CO_2 TR. The major applications are for cola drinks (CO_2 escaping from PET containers), cheese packaging, and other CO_2-sensitive products. There is no way to extrapolate the action of one gas to determine the action of another gas. Each gas is independent of the other gases and must be tested as an individual gas to determine its TR.

The measurable range of CO_2 transmission rate is 1.0 mL/($m^2 \cdot$ day) up to 100,000 mL/($m^2 \cdot$ day). Specifications for CO_2 systems are

Sensitivity—films, 1 mL/($m^2 \cdot$ day) [0.07 mL/(100 in.$^2 \cdot$ day)]; packages, 0.005 mL/(package · day)

Repeatability—films ±5 mL/($m^2 \cdot$ day) [±0.35 mL/(100 in.$^2 \cdot$ day)] or 1% of reading; packages, ±0.025 mL/(package · day) or 1% of reading

CO_2TR permeation systems can detect 100 ppm CO_2. This is an important factor when considering permeation or leakage. Efforts have to be made to keep the CO_2 from being diluted during the testing process. Diluting the CO_2 level can make a bad situation look good. This is just the opposite for O_2. Diluting a low-O_2 signal with air (20.8% O_2) will make it worse, not better.

An outstanding example of *partial pressure* can be observed using CO_2. Fill a PET container with 100% CO_2 and seal securely. The partial-pressure phenomenon happens over a period of time. CO_2 leaves the PET container much faster than O_2 or N_2 air enters the container. As CO_2 leaves, a vacuum is formed, which eventually causes the container to collapse. Even though CO_2 was removed, it left a vacuum, and O_2 and N_2 followed the partial-pressure law. The vacuum seems to play no part in the permeation process in this case.

Aromas and Flavors. As stated above, these need to be tested as individual gases, and there are a host of these in

All values are g/($m^2 \cdot$ 24 h) at 37.8°C (100°F)		WVTR value using zinc sulfate salt to create 84.5% rh	WVTR value using distilled water to create 100% rh, then factored by 0.846	% DEV
Nylon 6	#1	123	213	73.2
	#2	134	207	54.5

Figure 8. Comparison of nylon 6 "factored" with 100% rh vs tested with a saturated salt solution.

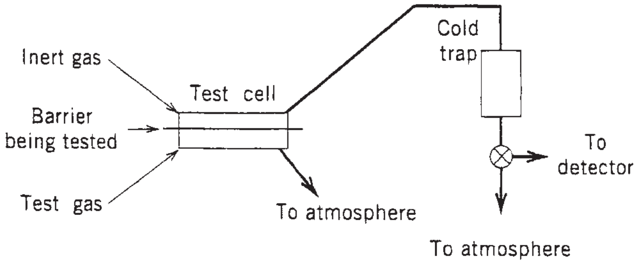

Figure 9. Aromatran schematic.

organics. This is a developing field with many opportunities, such as citrus flavor, D-limonene from an orange-juice container, citrus flavor into other food products (e.g., breakfast cereals), petroleum gases out of packages and into other packaged goods, and so on. Fortunately, a technique has been developed to handle all these organic molecules, however, only one at a time.

In brief (referring to the Aromatran schematic in Figure 9) a carrier gas (helium, N_2, or any number of inert gases) carries the test gas (D-limonene, butane, methane, apple flavor, etc.), which has permeated through a barrier to a *cold trap*, where it is captured and accumulated over a period of time. At the end of the "accumulate" time, the cold trap is heated quickly, which thereby releases the test gas molecules that had been captured.

The carrier gas, which is not affected by the cold trap, continues to flow and carries the test-gas molecules to a sensor. The sensor is an FID that is set up to detect the amount of test gas captured.

The results are given in common permeation terms:

$$X\,\mathrm{TR} = \mathrm{mL}/(\mathrm{m}^2 \cdot \mathrm{day}) \text{ at } 30^\circ\mathrm{C}$$

Permeation becomes more critical as the shelf life is extended. Not only is there concern about gases, such as O_2, water vapor, and CO_2 entering and leaving packages, but also the effects of aromas and flavors are playing an important role in the industry.

LEAKAGE

Everyone knows what a leak is—leaks in the roof, a leak in a tire, even a secret can be leaked out. It is something everyone can define, and everyone has an opinion on the subject.

In the previous section, we discussed permeation. Both permeation and leakage do the same thing: shorten shelf life.

Permeation can be determined, as described above; however, leaks are more erratic, evasive, and unpredictable. Where a permeation value might hold true for a production run of plastic film, leaks can vary from one package to the next. The ideal is to have 100% leak testing on a production run. This is ideal but not practical in most applications.

The perpetual issue of "hole size" is debated among manufacturers of food, pharmaceutical, and sterile medical products. Each has different criteria. The hole that will allow bacteria to enter a sterile package is much smaller than a hole that will allow gravy to drip out of a microwave entrée. First, we must agree on a term called "effective hole size." This is the summation of all the holes in the package. It could be the summation of round holes, square holes, holes with long tunnels, slight tears, big tears, hairline cracks, and so on. Let one hole represent the combination of all the leaks. By so doing, we provide a way of comparing one package to the next. Figure 10 illustrates the flow rate that one would expect through a round-style hole under various differential pressures across the hole. These curves apply to air at ambient temperature through a hole in a thin material.

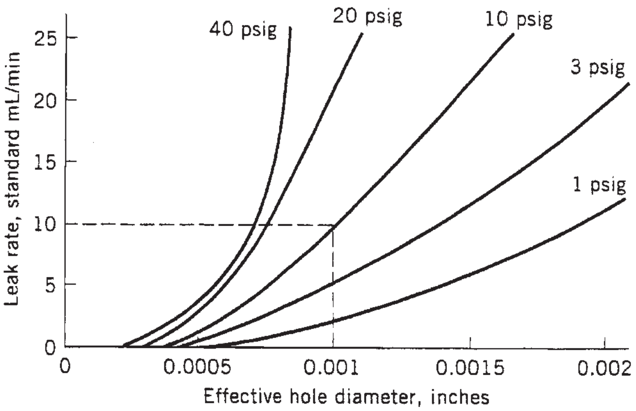

Figure 10. Flow rate of air through a round hole.

DESTRUCTIVE TESTING FOR LEAKS

Waterbath or dye–leak test. (See Figure 11). Throughout most of the twentieth century, package integrity has been verified by placing the package under water and looking for bubbles. Variations of the "waterbath" test have generally involved attempts to improve on the problems inherent in looking for bubbles. The "dye test" was an

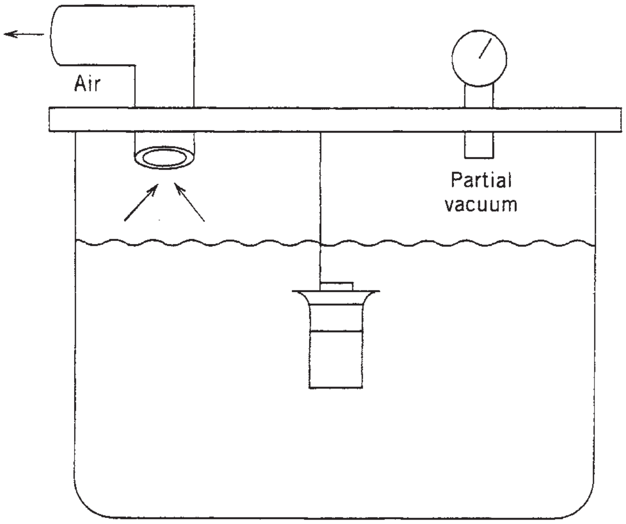

Figure 11. Waterbath or dye leak test.

improvement, but the two remaining problems are lack of repeatability and destruction of the package. Advantages and disadvantages of these tests are as follows:

1. The waterbath test
   a. Advantages
      (1) Can provide sensitivity
      (2) Inexpensive equipment requirements
      (3) Low-level technology, easy to train operator
   b. Disadvantages
      (1) Destructive
      (2) Results are very operator-dependent
      (3) Expensive labor requirements
      (4) Messy
      (5) Capillary attraction can give false results
2. The dye test
   a. Advantages
      (1) Ability to test many samples at once
      (2) Inexpensive equipment requirements
      (3) Low-level technology, easy to train operator
   b. Disadvantages
      (1) Destructive
      (2) Unreliable and operator dependent
      (3) Slow and labor intensive
      (4) Messy
      (5) One-way valve effect

Pressure/Pressure-Decay Method. This technique allows two tests to be run sequentially: (a) burst/seal strength and (b) leak.

Burst/Seal Strength. This is a practical starting point. It is important to ensure that handling and shipping does not destroy the package, which left the plant without leaks. It must remain sealed to maintain adequate shelf life and/or the desired quality when it reaches the consumer. Air pressure is introduced into the package until it *bursts!* The burst-point pressure is held so that it can be recorded. This burst test should be repeated several times to obtain an average. Analysis of this data would be required if damaged packages were discovered by a consumer. This also allows research and development (R&D) to investigate new packaging materials and sealing techniques. The average test time is 15 s.

Leakage. Once the burst/seal strength has been determined, look for leaks. Introduce a pressure into a new package at less than 50% burst pressure and monitor pressure decay. Pressure decay is a function of effective hole size and pressure differential and is inversely proportional to the volume of the package under test. It has been shown that holes as small as 1-mil diameter are detectable in small packages such as pharmaceutical bubbles, but it would be almost impossible or impractical to sense a 1-mil hole in a blimp. This method does not indicate the location of leak(s). The average test time is 10 s.

Other techniques that are destructive include halogen detection where a halogen agent, such as iodine, bromine, or fluorine, is used as a tracer gas. The system is pressurized with the tracer gas, and a probe is used to detect a leakage point. Although this test does detect leakage points, it is highly operator dependent; thus, a poor operator will get the best results, only on the basis of fewer rejects. The instrument response is slow and lacks quantitative accuracy. Food or drug products are not normally tested by this technique.

Halide Torch. Similar to the halogen system described above, in the halide-torch test, the tracer gas is sucked into a burner through a hose attached to the bottom of a burner. A change in the color of the flame indicates a leak.

Thermal-conductivity detector. A tracer gas, such as helium, carbon dioxide, or butane, is pressurized in the package, and a probe senses a change in gas thermoconductivity as the tracer gas enters the probe. This method does detect the leakage point; however, it also is highly operator dependent because if the probe is moved too fast or too far away from a hole, nothing will be indicated.

Helium Leak Detector. This has the greatest sensitivity. Inflate the package with helium. Then, using a probe, *sniff* around the package to find a leak. The major disadvantages are, besides high operator dependence, initial costs (for supplies, etc.) and unit maintenance, that if the instrument is swamped, it takes hours or days for a skilled technician to get it back on line.

Headspace analysis. A practical way to check for leaks is to measure the headspace of a package, and this can be done at any time, such as immediately following sealing or later, or even years later. Using a syringe, a sample of the headspace is taken from the package and injected into an instrument. If the O_2 content is to be determined, a zirconium oxide sensor is used; if CO_2 content is to be determined, an IR sensor is used. The results are given in percentage of contents, such as 0.5% O_2 or 30% CO_2, and within a few seconds after injection of the sample into the instrument. Applications include checking for cap/map effectiveness, shortly after testing to determine whether sealing was effective and met specifications and much later, to determine whether permeation had any effect. Note, in this latter case, that the long-term effect could be either a slow leak or permeation; this instrument cannot separate the two.

Nondestructive Testing for Leaks. The CO_2 leak detector is most commonly used in nondestructive testing of food and pharmaceutical packages. It is ideal if the package has been flushed with CO_2 before sealing or if CO_2 is generated inside, as in the case of coffee.

Leak Detection Using CO_2 Tracer Gas. Figure 12 shows the flow diagram of a CO_2 leak detector. The pump pictured is always running, sweeping room air in from the left and purging the test fixture and CO_2 sensor. When the test sequence is initiated, the dwell solenoid closes, thus causing the pump to draw a vacuum on the package inside the test fixture, which draws CO_2 out of the leaks. At the end of the test cycle, room air is again allowed to

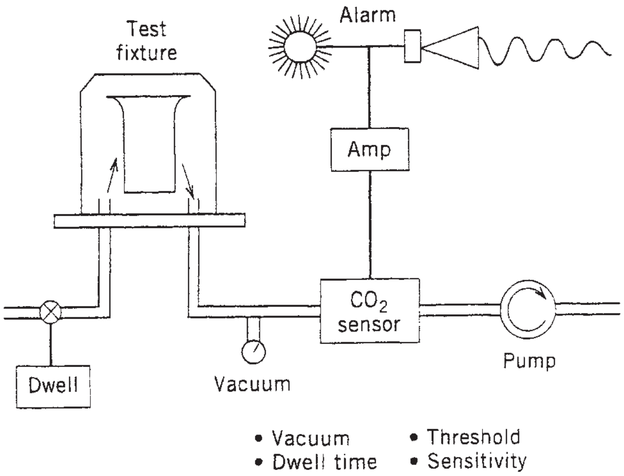

Figure 12. Co_2 trace-gas leak detection; nondestructive.

sweep into the test fixture. This flushes any CO_2 gas into the CO_2 sensor. If this CO_2 concentration exceeds the alarm threshold, the instrument signals that a leak is present. Throughout this cycle, room CO_2 concentration is viewed as the unit's zero, i.e., reference, point.

An important factor is the size of the test fixture compared with the package under test. The sensitivity is inversely proportional to the space outside the sample being tested. As mentioned, care must be taken to avoid diluting the CO_2 signal. Therefore, a specially designed fixture is needed for best results, i.e., to sense small leaks, and in most foods and/or pharmaceutical applications, small leaks are important.

In those cases where no CO_2 is in the package, CO_2 can be forced into the packages through the leaks by use of a pressure chamber filled with CO_2. The vacuum, shown in Figure 14 then draws CO_2 out of the package, which is sent to the CO_2 sensor. The tests that use this technique take 15 s on average.

Carbon dioxide trace-gas leak detection has been shown to be a sensitive, repeatable, and nondestructive alternative to traditional waterbath and dye-leak techniques. Justification is easiest when the product is expensive, as this nondestructive test procedure enables product to be exposed to additional laboratory tests, or to be returned to the production line.

CONCLUSION

The search for better leak-testing methods continues. The challenge is to devise a system that is nondestructive, can conduct 100% inspection at high speed, and, of course, is low cost. To date, the diversity of applications has precluded this. Each application must be evaluated to determine the best solution. Testing-systems manufacturers are challenged to write their specification legibly, clearly, and precisely to ensure that they are understood and can be applied.

Permeation is well defined and accepted in American Society for Testing and Materials (ASTM) specifications. Leakage requires the same attention.

BIBLIOGRAPHY

1. ASTM E96, American Society for Testing and Materials, Philadelphia, PA.
2. TAPPI 464, Technical Association of the Pulp and Paper Industry, Atlanta, GA.

TESTING, PRODUCT FRAGILITY

H. H. Schueneman
San Jose State University,
San Jose, California

The vast majority of products undergo a certain amount of handling and transportation from the time they are manufactured until they are ultimately used. This is especially true in a global economy. Normally, products are enclosed in a protective-package system during the time they are exposed to the hazards of the distribution environment. This article outlines engineering principles and procedures that optimize the protective function of a package system and help guarantee the product's safe arrival at favorable cost.

The waste of resources caused by improper packaging is enormous. Whether this waste shows up as damaged product or an overly expensive package system, it is still waste that can be avoided. The application of sound engineering principles to optimize the product protection system must receive significant endorsement by product managers, quality assurance (see Specifications and quality assurance), and all those concerned with delivering a quality product to the customer.

To develop a protective-package system, three important pieces of data are necessary: (i) information on the likely hazards (shock and vibration) from the distribution environment; (ii) product fragility characteristics and sensitivities in terms of the environmental inputs; and (iii) the performance characteristics of commonly available packaging materials.

The engineering process for developing a protective-package system involves a step-by-step problem-solving approach similar to other engineering disciplines. The principal focus is on product characteristics because it is impossible to optimize a package system without first knowing basic engineering data of the product itself.

Once the environmental hazzards have been defined, and product fragility has been determined, the engineer can evaluate the economic feasibility of possible product modifications. For example, if a certain component within the product keeps failing at a relatively low input level, it may be economically more desirable to modify that component and increase its ruggedness rather than design an expensive and inefficient package system for the entire product based on the sensitivity of that one component. If it is economically feasible to modify the product in order to effect a package-cost savings, this option should be studied carefully. Many examples exist where slight product modifications have resulted in substantial cost savings in packaging materials, reduced damage in shipment, and potentially large savings from improved logistics and shipping costs.

There are many potential hazards in the distribution environment, including shock, vibration, temperature or humidity extremes, electrostatic discharge, magnetic fields, and compression. This article deals primarily with shock and vibration inputs; however, it is important to explore carefully those areas where the product is sensitive or a large environmental input is likely.

The steps involved in designing an optimized package system are as follows:

1. ***Define the environment*** in terms of shock and vibration inputs likely during the product's manufacturing and distribution cycle.
2. ***Define product fragility*** in terms of shock and vibration.
3. ***Obtain product improvement feedback***; that is, examine product improvements in light of the economic tradeoffs between packaging/distribution costs and product modification costs.
4. ***Evaluate cushion material performance***; that is, evaluate the shock and vibration characteristics of available cusion materials and systems.
5. ***Design the package system***; that is, select cushion materials and design for optimum shock and vibration performance and minimum cube.
6. ***Test the final package***; that is, verify that the package system performs as designed and properly protects the product.

The primary purpose of this article is to examine product fragility testing in detail, and therefore the other steps are not covered in a comprehensive fashion. Refer to the bibliography for excellent background material on the other steps in this process (1–6) (see also Cushioning, design; Distribution hazards).

DEFINING THE ENVIRONMENT

The end result of defining the environment should be the establishment of a *design drop height* and a *resonant-frequency spectrum* for a particular product in a given distribution environment. That is, based on the size and weight of a packaged product, the engineer selects a drop height that represents a given probability of input. Also, vibration profiles for likely modes of transportation are selected. Both of these pieces of information are used in the last step, testing of the package system (7–10).

DEFINING PRODUCT FRAGILITY

The term *product fragility* is misunderstood by many people and often conjures up images of totally destroyed products, broken bottles, and the like. In reality, product fragility is simply another product characteristic such as size, weight, and color. Just as other product characteristics are determined by measurement, product fragility (or product ruggedness) can be measured with shock inputs. This measurement takes the form of a damage-boundary curve for shock and resonant frequency plots for vibration. In both cases, the importance of determining these characteristics cannot be overemphasized. Most people would not think of buying a pair of shoes based on guessing their foot size. It is just as short-sighted to design a package system by guessing at product fragility.

Shock Fragility Assessment

The damage boundary is the principal tool used to determine the ruggedness of a product; it takes the general shape shown in Figure 1. This plot defines an area on a graph bounded by peak acceleration on the vertical axis and velocity change on the horizontal axis. Any shock pulse that can be plotted inside this boundary will likely cause damage to the product regardless of whether it is packaged or not. (This is a *product* test.)

Acceleration is a vector quantity describing the time rate of change of velocity of a body in relation to a fixed reference point; that is, it describes the rate at which velocity is increasing (acceleration) or decreasing (deceleration). The terms *acceleration* and *deceleration* are often used interchangeably because most products respond similarly to a rapid start or a rapid stop. Both terms are expressed in G values, multiples of earth's gravitational constant, g. The SI units are m/s^2.

Velocity change is the difference in a system's velocity magnitude and direction from the start to the end of shock pulse. Velocity change is the integral of the acceleration versus time pulse and is directly related to drop height.

To run a damage boundary, mount the product to be tested on the table of a suitable shock-test machine (see Figure 2). Secure the product with a rigid fixture that lends even support to the product over its entire surface.

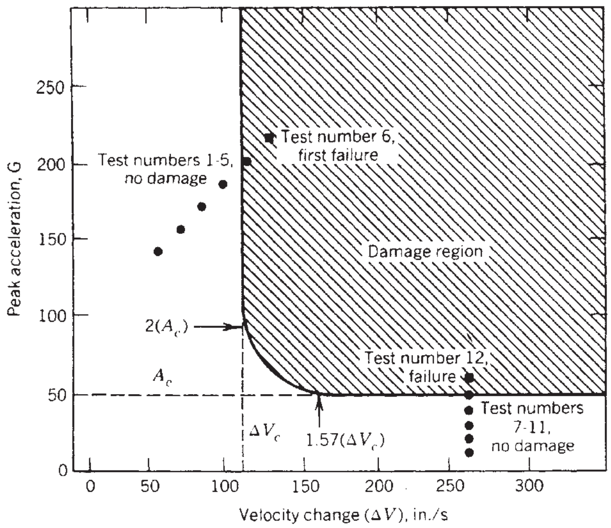

Figure 1. Damage boundary (single orientation). A_c, critical acceleration; V_c, critical velocity. To convert in. to cm, multiply by 2.54.

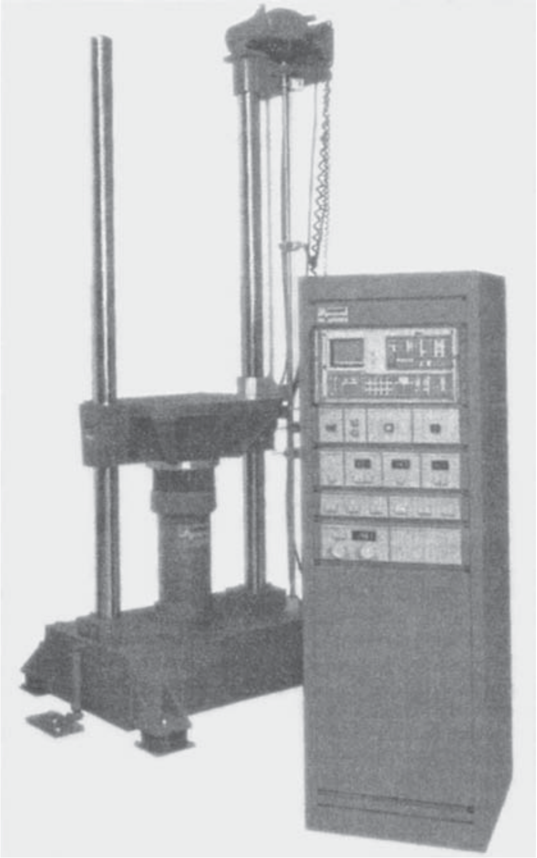

Figure 2. Shock-test machine.

The fixture must be as rigid as possible so that it does not distort the shock pulse transmitted to the product.

Set the shock machine to produce a low velocity-change shock pulse with a duration of approximately 2 ms (a half-sine waveform is generally used for this test). After the shock pulse is delivered to the product, examine it to determine if damage has occurred. If not, set the shock machine to produce a slightly higher velocity change and repeat the test. Continue this process with small incremental increases in velocity change until damage occurs. The last nonfailure shock input defines critical velocity change ΔV_c for the product in that orientation.

Next, fasten a new test specimen to the shock table and set the machine to produce a trapezoidal pulse with a low acceleration level and a velocity change at least two times that of the critical velocity determined in the previous test. Program the shock pulse into the product and, as before, examine the product to determine if failure occurs. If no failure has occurred, set the shock machine to produce a higher acceleration level at approximately the same velocity change. Repeat this procedure with small increments in acceleration until the failure level is reached. The last nonfailure shock input defines the critical acceleration, A_c, for the product in that orientation (11).

The damage boundary curve may now be plotted by drawing a vertical line through the critical velocity change point and a horizontal line through the critical acceleration point. The intersection of these two lines (the knee) is a smooth curve as shown in Figure 1. A rectangular corner may be used as a conservative approximation of the damage region (12).

Note that the critical acceleration as determined by a trapezoidal pulse is conservative when compared to that generated through the use of other waveforms; that is, a trapezoidal pulse is more damaging than other waveforms of the same peak acceleration and duration. This is shown graphically in Figure 3.

Since the shape of the waveform transmitted through various packaging materials during impact is generally not known, the use of a trapezoidal wave during damage boundary testing results in a higher confidence level in a packaging system and is recommended for this purpose. It should also be pointed out that the use of the trapezoidal waveform results in a nearly linear abscissa on the damage boundary. This means that it is necessary to determine only one point on that axis in order to determine the critical acceleration for the product in that orientation. Other waveforms result in critical accelerations that are a complex function of the natural frequency of components within the product. The procedure described is based on ASTM D3332 (13).

The damage boundary is a valuable and powerful tool. Critical velocity change is equated to equivalent free drop height from the formula $\Delta V = (1 + e)\sqrt{2gh}$, where e is the coefficient of restitution of the impact surfaces (V_i/V_r), g is acceleration of gravity [386 in./s^2 at sea level (9.8 m/s^2)], and h is equivalent free-fall drop height in in. (or m). The critical velocity change tells the designer how high the unpackaged product can fall onto a rigid surface before damage occurs in that axis. If this equivalent drop

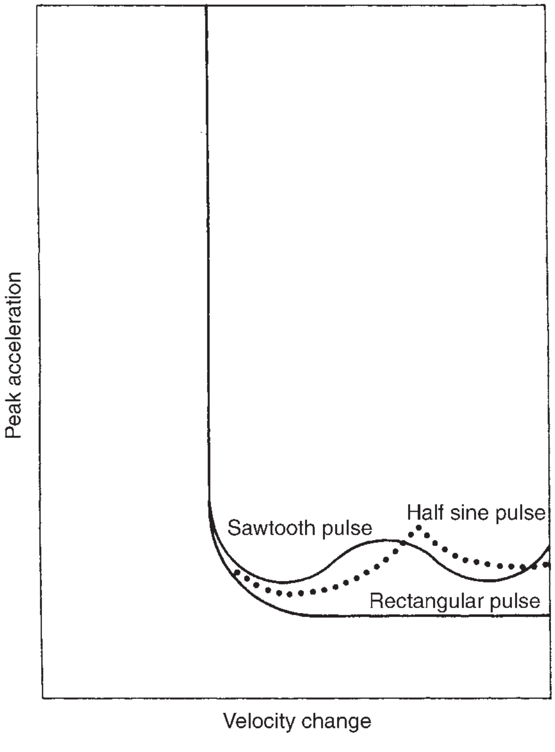

Figure 3. Damage boundary for various pulses.

height is likely to be exceeded in the distribution environment, then the product must be cushioned. The performance requirements of the cushion are that no more than the critical acceleration be transmitted to the product.

In theory, the value of *e* (coefficient of restitution) can vary from zero to one. A value of zero would imply a totally plastic impact with no rebound whatsoever. A value of one implies a perfectly elastic impact where the rebounded velocity is exactly equal to the impact velocity. As a practical matter, a range of $e = 0.25–0.75$ produces good accuracy in calculating the range of equivalent freefall drop height. The chart in Figure 4 shows the effect of *e*.

The damage boundary also tells the engineer that at low velocity changes, infinite accelerations are possible and that at low acceleration levels, infinite velocity changes are possible without product damage. That means that it is necessary to define both critical acceleration and critical velocity change to properly characterize the fragility (or ruggedness) of a product.

Before running the damage-boundary test, the engineer must define what constitutes *damage* to the product. On one extreme, damage may be catastrophic failure. However, there are many less severe damage modes that can make a product unacceptable to the customer. In some cases, damage can be determined by observation of the product; at other times it involves running sophisticated functional checks. Once the determination of damage is made, the definition must remain constant throughout the testing and must be consistent with what is deemed unacceptable to the customer.

In general, damage-boundary tests must be run for each axis in each orientation of the product. In the case of a rectangular product such as a television set, this means that a total of 12 specimens are necessary for a rigorous test. However, since this testing should be done in the product prototype stage, this quantity is rarely available for a potentially destructive test. As a practical matter, much information can be gained from a limited number of samples, and multiple damage boundaries are often run on the same unit in different orientations.

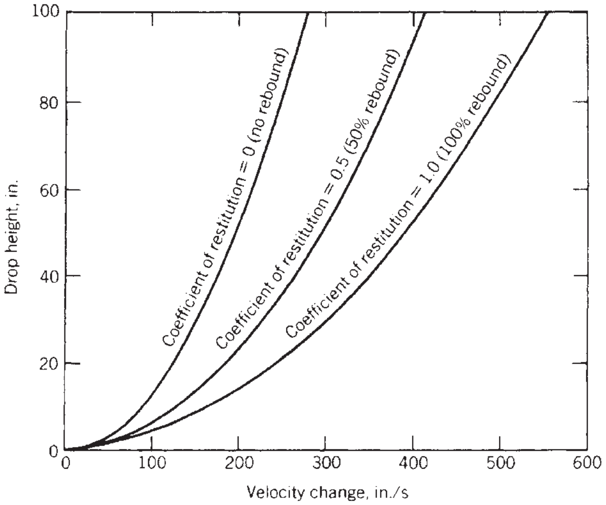

Figure 4. Coefficients of restitution. To convert inches to centimeters, multiply by 2.54.

Vibration-Fragility Assessment

Determining product-vibration sensitivities involves identifying resonant frequencies of components within the product in each of the principal axes. Resonance is that characteristic displayed by all spring/mass systems wherein at a given frequency, the response acceleration of a component is greater than the input acceleration. This characteristic is shown graphically in Figure 5.

As a general rule, the product will not be damaged due to nonresonant inertial loading caused by vibration in the *distribution environment*. This is because the acceleration levels of most vehicles are relatively low when compared to the critical acceleration of most products. It is only when a component within a product is excited or forced by vibration at its natural frequency that damage is likely to occur.

At frequencies below the resonant frequency, the response of a critical component is roughly equal to the input (the response/input ratio is 1). At frequencies higher than the resonant frequency, the response acceleration is lower than the input. In this region a component acts as its own isolator and results in a condition known as *attenuation*.

At (and near) the product resonant frequency, however, the response acceleration can be very much greater than the input, causing product fatigue and ultimate failure in a relatively short time. The purpose of vibration sensitivity assessment is to identify those critical frequencies likely to cause damage to the product.

A *resonant frequency search test* is run by attaching a product to the table of a suitable vibration test machine (Figure 6) and subjecting it to an acceleration input at a low level (typically 0.25–0.5 *G*) over a suitable frequency

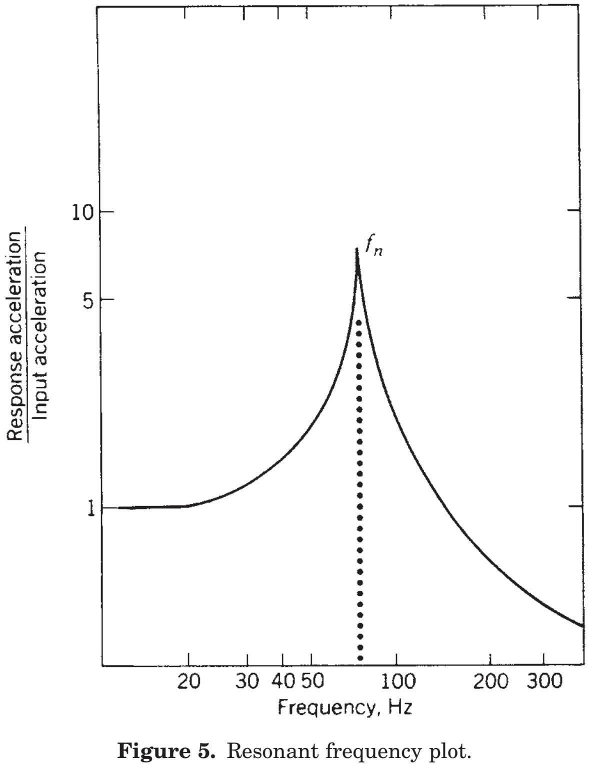

Figure 5. Resonant frequency plot.

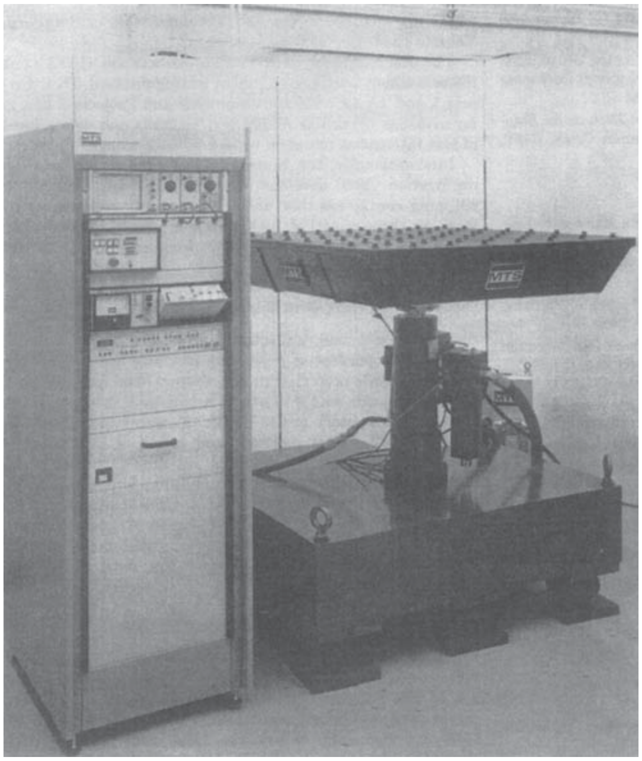

Figure 6. Vibration-test machine.

range, typically 1–300 Hz (cycles per second). Accelerometers are fastened to critical components within the product in order to determine the components' responses to the input acceleration. The response/input ratio is plotted as a function of frequency for each "critical" componant. This ratio reaches a maximum at the component resonant frequency. The test usually involves monitoring many components in each axis of the product in order to characterize its overall vibration sensitivities (14). Sinusoidal or random excitation can be utilized for this test, but random vibration excitation has gained wide popularity due to the ease of use, test efficiency, and potentially more accurate data.

The importance of vibration teting cannot be overemphasized. Any product shipped from point *A* to point *B* is subject to vibration because of the transit vehicle it is riding. The probability of this input is 100%. In contrast, the probability of a shock input because of a drop is exactly that, a probability function. In some cases, the drop height experienced by a product may be severe, in most cases, it is hardly measurable. However, any product that is shipped in a vehicle is subject to vibrational input and it should be tested for sensitivity to that input.

CONCLUSION

At this point, the engineer has sufficient data to make intelligent decisions about tradeoffs between the product modifications and package costs. If a fragile component can be ruggedized at minimal cost, resulting in substantial package savings, then it makes sense to pursue the product modification.

The package-design process uses environmental data, product-fragility information, cushion-performance data (see Foam cushioning; Testing, cushion system), and a healthy dose of designer creativity. Knowledge of package-fabrication techniques, as well as other vital information on flammability restrictions, maximum weight and cube for storage and transportation, recyclability of the package components, future cost trends of various key materials, and so on. (1, 3, 5, 6, 15), is essential.

Once the design has been finalized and a prototype fabricated, it must be tested to verify compliance with product requirements. It is important to specify the correct inputs, both their magnitude (or duration) and sequence, in order to closely duplicate the potentially damaging effects of the distribution environment. Test procedures such as ASTM D4169 (7) and a variety of new ISTA test procedures (17) have done much for improving the correlation between laboratory tests and field experience (2, 4, 16).

A properly engineered packaged system is now within reach of all manufacturers, distributors, and other package-system users. The wasteful practice of overpackaging can virtually disappear along with damage-in-shipment reports. The tools are available and the technology is straightforward. Optimized packaging is indeed an attainable goal.

BIBLIOGRAPHY

1. M. E. Gigliotti, *Design Criteria for Plastic Package Cushioning Materials*, Plastic Technical Evaluation Center, Picatinny Arsenal, Dover, NJ, 1962.
2. T. J. Grabowski, *Design and Evaluation of Packages Containing Cushioned Items Using Peak Acceleration Versus Static Stress Data, Shock, Vibration and Associated Environments Bulletin*, No. 39, part II, Office of the Secretary of Defense, Research and Engineering, Washington, DC, 1962.
3. C. Henny and F. Leslie, *An Approach to the Solution of Shock and Vibration Isolation Problems as Applied to Package Cushioning Materials, Shock, Vibration and Associated Environments Bulletin*, No. 30, part II, Office of the Secretary of Defense, Research and Engineering, Washington, DC, 1962.
4. M. T. Kerr, "The Importance of Package Testing in Today's Data Processing Industry" in *Proceedings of Western Regional Forum Packaging Institute*, USA, 1981.
5. R. D. Mindlin, *Bell System Tech. J.* **24**(304), 352 (1945).
6. S. Mustin, *Theory and Practice of Cushion Design*, Shock and Vibration Information Center, U.S. Department of Defense Washington, DC 1968.
7. ASTM D4169-05, *Standard Practice for Performance Testing of Shipping Containers and Systems*, American Society for Testing and Materials, Philadelphia, 2005.
8. S. G. Guins, in *Shock and Vibration Handbook*, Part II, McGraw-Hill, New York, 1961, Chapter 45.
9. F. E. Ostrem and B. Libovicz, *A Survey of Environmental Conditions Incident to the Transportation of Materials, Report PB-204 442*, General American Transportation Corp., Niles, IL, 1971.

10. R. J. Winne, "What Really Happens to Your Package in Trucks and Trailers" in *Proceedings of Western Regional Forum of the Packaging Institute*, USA, 1977.
11. R. D. Newton, *Fragility Assessment Theory and Test Procedure*, Monterey Research Laboratory, Inc., Monterey, CA, 1968.
12. D. E. Young and S. R. Pierce, *Development of a Product Protection System, Shock and Vibration Bulletin*, No. 42, Office of the Secretary of Defense, Research and Engineering, Washington, DC, 1972.
13. ASTM D3332-99, *Standard Methods for Mechanical-Shock Fragility of Products Using Shock Machines*, American Society for Testing and Materials, 2004.
14. ASTM D3580-95, *Standard Method of Vibration (Vertical Sinusoidal Motion) Test of Products*, American Society for Testing and Materials, Philadelphia, PA, 2004.
15. J. P. Phillips, "Package Design Consideration for the Distribution Environment," *Proceedings of the 1979 International Packaging Week Assembly, Packaging Institute*, October 1979.
16. J. F. Perry, *A Brief Summary of Dynamic Test Methods for Shipping Containers*, Del Monte Corporation, Walnut Creek, CA, March, 1982.
17. The 2008 ISTA Resosurce Book, International Safe Transit Associon, 2008.

General References

C. M. Harris and A. G. Piersol, *Harris' Shock and Vibration Handbook*, 5th edition, McGraw-Hill, New York, 2002.

C. E. Crede, *Vibration and Shock Isolation*, John Wiley & Sons, New York, 1951.

J. F. Perry, "Cost Reduction Through Dynamic Testing of Shipping Containers," *Packaging Technology* (June/July 1982).

W. Silver and E. Szymkowiak, "Recommended Shock and Vibration Test for Loose Cargo Transported by Trucks and Railroads," *Proceedings of the Institute of Environmental Sciences*, 1979.

ASTM D 5276-98, *Drop Test for Shipping Containers*, American Society for Testing and Materials, Philadelphia, PA, 2004.

ASTM D 1596-97, *Method of Testing for Dynamic Properties of Package Cushioning Materials*, American Society for Testing and Materials, Philadelphia, PA, 2003.

ASTM D 999-07, *Standard Methods for Vibration Testing of Shipping Containers*, American Society for Testing and Materials, Philadelphia, PA, 2007.

TESTING, SHIPPING CONTAINERS

Alfred H. McKinlay
Consultant, Pattersonville,
New York

Shipping containers are tested in the laboratory to verify their ability to survive hazards in the distribution environment. Tests may be conducted as a packaging development tool for quantitative purposes, or as a qualitative measure of performance. Objectives may be reduction of damage, cost improvement, assurance of safe product shipment, or other package-design reasons. Laboratory preshipment tests, utilizing proven industry standards, will provide a high level of assurance that a package design will function properly and safely deliver its contents, without cumbersome trial shipments. Such trials require a large number of test packages and significant time delay before an indication of success or failure. They provide no fundamental data, are expensive to conduct, and may severely delay introduction of new products to the marketplace. While some trial shipments are a good idea as a final check, prior laboratory testing is a much quicker indicator of success or failure and can precisely identify causes of inadequacy.

SOURCES OF TEST METHODS

The oldest and largest developer of packaging test methods, including those for shipping containers, is ASTM International (American Society of Testing and Materials). ASTM test methods, which are based on a balanced consensus approval process, have worldwide acceptance. Updated at least every 5 years, their standards for packaging began development in 1914 and now include over 130 test methods, specifications, or practices, which are included in the ASTM *Annual Book of Standards*, Volume 15.10 (1).

The International Safe Transit Association (ISTA) publishes several types of preshipment testing procedures. These include: Series 1 Non-simulation Integrity Tests, Series 2 Partial Simulation Tests, Series 3 General Simulation Tests, Series 5 Focused Simulation Tests, and Series 7 Development Tests (2).

Internationally, the International Organization for Standardization (ISO) develops and maintains test methods for shipping containers that are similar to, but not exactly the same as, those of ASTM. ISO standards may be obtained from the American National Standards Institute (ANSI) in New York City.

ENVIRONMENTAL HAZARDS TO SHIPPING CONTAINERS

Shipping containers and interior protective packaging serve the primary purpose of protecting products against environmental hazards occurring in distribution. An early definition of these hazards was set forth in a 1979 report by the Forest Products Laboratory of the USDA (3), FPL 22, and still remains a source of many test methods and levels of intensities. It identifies the following hazards as the major causes of damage in distribution: rough handling, shock and vibration in transit, compressive forces, and temperature and humidity extremes. Experience of many shippers supports the contention that these hazards are still the major culprits, with rough handling clearly the most severe and frequent cause of damage. Since the late 1980s, instrumentaion progress has made it possible to measure shock, vibration, temperature, and humidity much more accurately and easily. Packaging researchers have used these instruments to update and enlarge the database from FPL22 (3) since that time.

TEST METHODS FOR REPRODUCING SHIPPING HAZARDS

Each of the major distribution hazards of handling, shock and vibration in transit, and compression can be reproduced by one of several test methods, depending on the type of container, test equipment availability, or purpose of test. The following discussion covers the most widely used ASTM methods.

Drop test

Accidental or purposeful dropping or striking of containers during handling, loading, and unloading is the prime source of damage to most packages under 200 lb. ASTM test method D5276, *Drop Test of Loaded Containers by Free Fall*, describes the equipment and methodology for conducting a laboratory simulation of this hazard. All types of shipping containers may be tested, including boxes, cylindrical containers, bags, and sacks. Accuracy of the drop-test equipment is specified, including a requirement for impact surface mass of at least 50 times that of the heaviest container to be tested. The method may be used to check the ability of the container to survive free fall, evaluate the protective capability of container and inner packing, compare performance of different package designs, or permit observation of progressive failure of a container and damage to its contents.

An alternative to free-fall drop is ASTM test method D5487, *Simulated Drop of Loaded Containers by Shock Machine*. This method provides more accurate package positioning for impacts, particularly on flat impacts where the shock transmitted to package contents is usually greatest. While the shock machine method has been shown to be quite accurate for most applications, rigid package systems are not recommended for testing by this method (where “rigid” means a natural frequency above 83 Hz for the system).

Incline Impact Test

For large shipping containers, an alternate method for obtaining an impact is ASTM test method D880, *Impact Testing for Shipping Containers & Systems*. A guided test carriage, tilted at 10°, is loaded with the test specimen on the leading edge and pulled up the incline to a distance sufficient to produce the desired impact velocity. The carriage is then released and travels down the incline until the container strikes the impact surface, also tilted at 10°. When the incline test equipment, dubbed the “Conbur test,” is constructed with impact surface at least 50 times the mass of the heaviest test specimen, it is considered equivalent to a free-fall drop test for intensity of shock. ASTM D880 also includes the use of pendulum equipment as an alternative to the incline.

A popular test sequence and level of intensity for the incline impact test is the ISTA 1B procedure for containers and skidded or palletized items weighing over 150 lb. It specifies an impact velocity of 5.75 ft/s with impacts on all four sides, followed by a rotational bottom drop from 8 in. high. The incline impact equipment may also be modified such that it can reproduce shocks similar to railcar switching impacts. ASTM test method D5277, *Performing Programmed Horizontal Impacts Using an Inclined Impact Tester*, describes the required carriage bulkhead, programming material or device, and other modifications that are necessary for simulating standard railcar draft-gear impacts. The method is not appropriate for long-travel draft gears or cushioned railcar underframes.

Horizontal Impact Test

A more accurate method of reproducing all types of railcar impacts is described in ASTM test method D4003, *Programmable Horizontal Impact Test for Shipping Containers and Systems*. The test equipment specified is a horizontal shock machine with precise control over impact and rebound velocities. Dynamic compression of containers during railcar switching is great, due to backload of other freight pressing against it; therefore, the test method describes how such backload should be simulated during testing. Proper instrumentation and calibration, critical to the method’s accuracy, are specified in some detail. ASTM D4003 may also be used for other types of horizontal impact simulation, such as pallet marshaling.

Bridge Impact Test

Some handling systems place heavy stress on long packages, particularly in small-parcel shipping. ASTM test method D5265, *Bridge Impact Testing*, specifies equipment and methodology for applying impacts to the center of long packages. Two options are included; A, for using a free-fall drop tester; or B, for using a SMITE tester. In both methods, the package is supported on its ends and an impacting device drops onto its center at a specified impact velocity.

Concentrated Impact Test

Thin-walled shipping containers and plastic wrapped items often incur damage to contents due to impacts from other packages or handling devices. The impacts typically do not cause a puncture but do impose severe deflection of the container wall, resulting in damage to the contents. ASTM test method D6804, *Test Method for Concentrated Impacts to Transport Packages*, specifies equipment and methods for applying concentrated impacts to specific surfaces of the package.

Other Handling Tests

ASTM Standard D6179, *Rough Handling of Unitized Loads and Large Shipping Cases & Crates*, contains a number of test methods particularly suited to reproducing handling hazards for either unitized loads or large containers or both. Included are the following:

Free-Fall Drop Test. This utilizes a quick-release hook and sling for equipment to drop test on any container surface.

Rotational Edge-Drop Test. One end of the specimen is supported on a block while the opposite end is raised to specified height and then dropped to the floor.

Corner Drop Test. One bottom corner is supported on a block while the diagonally opposite bottom corner is raised to specified height and then dropped to the floor.

Raised-Edge Drop Test. One end of the specimen is raised to a specified height while the opposite end rests on floor, and then the raised end is dropped to floor.

Rolling Test. This determines the ability of a container to withstand the effects of rolling.

Tip Test. This determines the ability of tall or top-heavy containers to resist tipping over.

Tipover Test. This determines the protective ability of loaded shipping containers when subjected to tip-over impacts.

ASTM Standard D6055, Mechanical Handling of Unitized Loads and Large Containers or Crates, provides methods of testing handling capabilities using lift trucks, grabhooks, or slings. A test course and methodology is described for handling tests by four types of lift truck: fork, spade, clamp, and push–pull.

VIBRATION TESTS

Although vibration-induced damage is not a frequent problem for most packaged products, vibration does occur with certainty on every shipment by any mode of transport. It is therefore important to test all types of shipping containers for vibration. Four methods of vibration testing are available, depending on equipment and test objective.

ASTM test method D4728, *Random Vibration Testing of Shipping Containers*, provides the closest simulation to actual vibration received by containers in transit. Input for the test may be generated from field measurements made with accurate recording instruments or from use of the sample vibration spectra for commercial transport that is included in the standard. Test durations frequently run as long as 3 h or more, depending on the packaged product, distance shipped, and objective of the test. Resonance buildups during random vibration are less intense than by sinusoidal vibration methods, and unrealistic fatigue damage is therefore minimized.

ASTM Standard D999, *Vibration Testing of Shipping Containers*, actually contains four distinct test methods and utilizes two entirely different types of vibration equipment. Method A is a repetitive shock test, not really vibration in the pure sense, and is divided into A1 for rotary motion and A2 for vertical motion. Both tests are conducted with the package free to bounce on the table, which is running at a frequency causing the package to just lift off during the upstroke of each vibration cycle (known as 1*G*+). The operating frequency and table displacement are constant throughout the test, which is usually performed on a mechanical-type vibrator. Typical test duration is about 1 h with smaller, nonskidded containers tested one-third of the duration on each axis. The two methods do not create the same type of motion; therefore, they also do not cause the same types of damage.

Methods B and C of D 999 are resonance search and dwell tests, typically performed on electrohydraulic equipment that easily performs at 3–200 Hz as required for most packaging tests. The table displacement varies inversely with the frequency so as to maintain a constant level of force, usually 0.25 *G* to 1 *G*. The purpose of the test is to locate natural frequencies of the packaged product and then dwell for a specified time at each natural frequency while the package resonates. Procedures are described for sweeping the vibration frequency up and down to locate the natural frequency points. Method B is conducted on single containers while Method C is conducted on stacks of containers or unitized loads. Typical dwell times at resonance for both methods is 5–15 min for each point, although some users dwell for up to 1 h.

Compression Tests

The effects of stacking one container on another in storage or transportation can be studied by means of the compression test. Two ASTM test methods are available: D642, *Determining Compressive Resistance of Shipping Containers*, and D4577, *Compression Resistance of a Container Under Constant Load*. The former requires a testing machine that applies a steadily increasing force to the container until it fails. A recording device notes applied load and container deflection during testing that generally requires ≤ 2 min for completion. ASTM test method D4577 may use a similar machine, but more typically utilizes a simple stationary apparatus that positions the test specimen under a fixed constant load for the desired time, anywhere from 1 h to 1 year. Both methods may be used on filled shipping containers or on empty ones, depending on test objective.

Water-Vapor Transmission Test

To measure the resistance of shipping containers to water vapor, ASTM D4279, *Water Vapor Transmission of Shipping containers*, provides two test methods. The constant-atmosphere method is conducted at 90% rh and 100°F. The cycle method goes up and down, from 0°F to 100°F., 90% rh and back, for a number of specified cycles. Different procedures are defined for reclosable and nonreclosable containers.

Water-Resistance Test

ASTM test method D951, *Water Resistance of Shipping Containers by Spray Method*, determines how well a filled container will resist water spray such as produced by heavy rains or waves over the deck of a ship. The test is frequently conducted in a series with other tests such as drop or incline impact.

CONDITIONING FOR TESTING

A requirement in all ASTM shipping container test methods is for testing at a specified condition of temperature

Table 1. Special Atmospheres

Environment	Temperature, °F (°C)	Relative Humidity (rh), %
Cryogenic	−67±6 (−55±3)	
Frozen-food storage	0±4 (–18±2)	
Refrigerated storage	41±4 (5±2)	85±5
Temperate, high-humidity	68±4 (20±2)	90±5
Tropical	104±4 (40±2)	90±5
Desert	140±4 (60±2)	15±2

and humidity. A variety of atmospheric conditions are described in D4332, *Conditioning Containers, Packages, or Packaging Components for Testing*. This standard practice provides special conditions that may be used to simulate particular field conditions that a container may encounter during distribution. The standard also describes procedures for preconditioning the containers to ensure that they reach equilibrium in the atmosphere before they are exposed to the final test conditions. Following preconditioning, containers are placed in the conditioning chamber for a specified time, ordinarily at least 72 h, to reach equilibrium at test conditions. Most testing is conducted at the U.S. standard conditioning atmosphere of 73°F and 50% rh, but other test atmospheres may also be used, as listed in Table 1.

PERFORMANCE TESTING

The test methods described to this point may be used in several ways by package designers. The most frequent use is as an engineering development tool to ascertain how well design and materials are doing their job of protecting the product. But the same methods may also be utilized to indicate whether the package will *perform* as expected for the total distribution cycle. Whereas engineering development testing often overstresses the package to determine its limits when subjected to a particular hazard, the performance use of the same methods is a pass/fail, go/no-go situation with the same container going unopened through the full set of tests. Development testing is a quantitative measure, while performance testing is qualitative.

ASTM D4169, *Standard Practice for Performance Testing of Shipping Containers and Systems*, has received wide acceptance as a national standard for measuring expected shipping-container performance. It is essentially a matrix of test methods, distribution modes, and levels of test intensities. Putting them together in a sequence that simulates a particular distribution environment produces a “distribution cycle” (DC) containing certain hazards (tests). If the shipping container and contents survive the DC, then it can be assumed that they will also survive in actual handling and shipping by the same method of distribution (DC). ASTM D4169 also requires that the criteria of acceptance (definition of success or failure) be predetermined and documented prior to testing.

Each hazard in distribution is identified in D4169 with a test method to reproduce it. Table 2 lists the nine hazard elements recognized in the performance standard, along with the corresponding test methods.

Presently, there are 18 distribution cycles in D4169, each containing a sequence of hazards expected by that particular distribution method. Table 3 is a listing of the cycles with hazards noted by their code letters from Table 2.

For those packaging engineers with a good knowledge of their distribution environment(s), DC 2 has become the performance test plan of choice. It permits them to develop a test plan that fits the often unique sequence of hazards that their packages encounter in distribution.

Since 1997 ISTA has also developed several performance or general simulation test procedures which are somewhat different than ASTM’s. They are Procedure 3A for Parcel Delivery System Shipments, 3E for Unitized Loads of Same Product, 3F for Distribution Center to Retail Outlet Shipments, and 3 H for Mechanically Handled Bulk Transport Containers. There is also a focused simulation Procedure 5B for Temperature Controlled Transport Packages.

REGULATORY AGENCY USE OF CONTAINER TESTING

Shipping-container performance requirements, as a substitute for material or design specifications in regulatory documents, has been slowly making progress. The U.S. Department of Transportation (DOT) now requires that many hazardous materials be packaged in conformance to a brief set of performance-test specifications rather than to cumbersome and complex material and design specifications previously required (4). The National Motor Freight Classification in 1995 authorized an alternate rule, Item 180, performance requirements for LTL shipments, which can be utilized at the shipper’s discretion

Table 2. Hazard Elements and Corresponding Tests

Code	Hazard Element	Test Simulation of Hazard	ASTM Designation
A	Handling— manual and mechanical	Drop, impact, stability	D5276, D880, D4003, D6055, D6179
B	Warehouse stacking	Compression	D642
C	Vehicle stacking	Compression	D642
D	Stacked or unitized vibration	Random vibration	D4728
E	Vehicle vibration	Random or sinusoidal vibration	D4728, D999 Method B or C
F	Loose-load vibration	Vibration (aka repetitive shock)	D999 Method A1 or A2
G	Rail switching	Longitudinal shock	D4003, D5277
H	Climate, atmospheric conditions	Temperature, moisture humidity	D4332
I	Low Pressure	Vacuum	D6653

Table 3. Performance Test Sequence by Distribution Cycle

	DC Hazard Element	
Distribution Cycle (DC)	Number	Sequence
General schedule—undefined distribution system	1	A, D, F, G, A
Specially defined distribution system, user-specified	2	User-specified from Table 3 Hazard Elements
Single-package environment, ≤100 lb	3	A, C, F, E, A
Motor freight		
Single package >100 lb	4	A, C, F, E, A
Truckload, not unitized	5	A, D, E, A
Truckload or LTL, unitized	6	A, D, A, B
Rail, carload		
Bulk loaded	7	A, D, G, A
Unitized	8	A, D, G, A, B
Rail and motor freight		
Not unitized	9	A, C, E, G, F, A
Unitized	10	A, D, G, A, B
Trailer-on-flatcar, container-on-flatcar	11	A, G, D, F, A
Air and motor freight		
>100 lb	12	A, D, I, E, A
≤100 lb	13	A, C, F, I, E, A
Warehousing (partial cycle to be added to other cycles as needed)	14	A, B
Export/import shipment		
By intermodal container or roll on/roll off equipment (partial cycle to be added to other cycles as needed)	15	A, C, A
For palletized cargo ship (partial cycle added as needed)	16	A, C, A
For breakbulk cargo ship (partial cycle added as needed)	17	A, C, A
Non-commercial Government shipments	18	A, B, C, A, H, F, A

instead of other material- and design-based rules or special package numbers (5).

BIBLIOGRAPHY

1. *Annual Book of Standards, Volume 15.10*, ASTM International, West Conshohocken, PA, 2007.
2. *Pre-shipment Test Procedures*, International Safe Transit Association, East Lansing, MI, 2007.
3. F. E. Ostrem and W. D. Godshall, *An Assessment of the Common Carrier Shipping Environment*, General Technical Report FPL 22, U.S. Forest Products Laboratory, USDA, Madison, WI, 1979.
4. *Code of Federal Regulations Title 49*, U.S. Department of Transportation, Office of Hazardous Materials Safety, Washington, DC, 2006.
5. *National Motor Freight Classification*, American Trucking Association, Alexandria, VA, 2006.

THERMOFORM/FILL/SEAL

Edwin Ho
OSI Industries,
Lisle, Illinois

Thermoform/fill/seal equipment is used for a variety of food and nonfood packaging applications. Thermoform/fill/seal (TFFS) machines use two continuous webs or rolls of film (see Figure 1). Typically, the lower web is formed into a cup, pouch, tray, and so on, which is then filled with product. The upper web becomes the lid or cover. Although over 90% of all TFFS machines are run with formed bottom webs and unformed lidstock, it should be mentioned that this is not always the case. Sometimes both webs are formed; sometimes the top web is formed, and the bottom one is not, depending on product presenatation, marketing need, competitive packaging advantages, and so on.

PACKAGING APPLICATIONS

TFFS machines were originally designed as vacuum-packaging machines to package ham, bacon, or sausage. From cured meats, their use spread to other sectors of the meat industry (frozen steaks, certain fresh meats, cook-in-package delicatessen meats), and then to cheese products, baked goods, fresh pasta, and a variety of perishable food products requiring extended shelf life.

Nonfood applications of TFFS evolved from the original vacuum-packaging machines for sausage and meat products. These are primarily sterile-medical applications. Typical medical items packed on TFFS equipment are syringes, needles, catheters, kidney-dialysis filters, scrub sponges, surgical drapes and clothing, operating-room kits, and many other items. Although medical TFFS machines are structurally and conceptually the same as TFFS machines used in the food industry, the materials

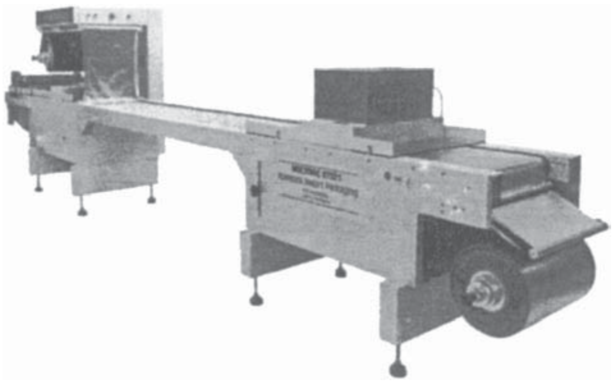

Figure 1. Thermoform/fill/seal machine. Shown with lower web-forming station in foreground. Note extensive product-loading area.

tend to be more difficult to run and the quality standards for cutting and thermoforming are more difficult to meet. Among the TFFS applications that are not food or medical are the following: hardware items, cigarette lighters, cosmetics, and similar applications where packages made on continuous-web machinery are replacing preformed plastic “blisters” (see Carded packaging).

Food Packaging

In food applications, the packages are almost always hermetically sealed, and the films have various degrees of barrier properties. The primary application for vacuum packaging is to improve shelf life of foods that are sensitive to oxygen or susceptible to dehydration. Almost all cured-meat products (ham, bacon, sausage, corn beef, beef jerky, etc.) are vacuum-packaged, as are many cheeses. An off-shoot of vacuum packaging is controlled atmosphere packaging (see Modified atmosphere packaging). A modified atmosphere package produced on TFFS equipment is a step beyond vacuum packaging. First, the unsealed package is indexed automatically into a vacuum chamber. Then all the air is removed from the package. Once the air is removed, the desired gas mixture is injected into the package, usually until the pressure of gas inside the package reaches about one atmosphere. Table 1 lists some commonly used gas mixtures and their application.

Vacuum and modified atmosphere packages are generally used to protect refrigerated perishable foods that would otherwise spoil in less than a week. In a modified atmosphere, they may stay fresh for 4–6 weeks or longer. Many frozen foods are also packed on TFFS machinery, and a modified atmosphere can sometimes replace freezing (see Figure 2). Some nonperishable foods with shelf life of over one year can be packaged on TFFS equipment. In Europe, for example, shelf-stable heat-processed vegetables are marketed in retorted thermoformed packages. Thermoforming machines can be modified to mechanically cold-form aluminum foil for retort processing of various meat and nonmeat dishes. The taste, texture, and nutritional quality of food in retort-sterilized aluminum foil pouches is generally higher than that of conventionally canned foods (see Retortable flexible and semirigid packages).

TFFS MACHINES

The essence of TFFS machines is their modularity. Within any given machine designation, an almost infinite number of configurations is possible. There are six basic operations that make up the production of a package on TFFS equipment: film advance, thermoforming, loading, sealing, cutting, and labeling/printing (see Figure 3).

Film Advance

TFFS machines are built like miniature assembly lines with separate stations for different operations. There are several film-advance mechanisms for moving the webs through these stations. The drive mechanism such as 2

Table 1. Gases Used in Packages Produced on TFFS Equipment

Gas	Application
N_2	As a pressure-relief agent to prevent external atmosphere from crushing the product. N_2 is an inert gas. It does not react with either the food substances or bacteria. Common applications include bulk-pack bacon and sausage, shredded and sliced cheese, and beef jerky.
CO_2	Depending on the application, 25–100% CO_2 may be used. CO_2 lowers the pH of the food product and can exert a powerful slowing effect on the growth of bacteria and molds. Primary application is for baked goods, cookies, cakes, and breads, as well as dough and pasta products. CO_2 tends to be absorbed into the actual body of the food product itself. On one hand, CO_2 is frequently mixed with N_2 to prevent the package from clinging too tightly to the product. On the other hand, some products that are not sensitive to strong pressure or tight cling, but that are susceptible to spoilage by mold growth, are packed in an atmosphere of 100% CO_2. An example of this is chunk cheese. Many CO_2 gas packages have the appearance of a vacuum package, with much of the CO_2 absorbed into the product itself. In an extreme instance, container collapse in shredded cheese can occur due to extended CO_2 absorption by cheese causing negative internal pressure if 100% CO_2 is used. A mixture of 80%/20% of CO_2/N_2 is recommended to prevent package collapse and is still able to prevent mold growth in cheese.
O_2	The application using O_2 are primarily for red meat. The concept has been progressively used in the United States and Europe for centrally packed retail cuts in the past decade. The O_2 is used as an oxygenating agent, at levels in the range of 40–80%, to form the bright-red, fresh-meat color called oxymyoglobin. When O_2 is used, it is usually mixed with CO_2 and N_2: CO_2 for its preservation effect, N_2 to provide a bulking agent. The O_2 tends to disappear inside the package. It can be metabolized by the meat to CO_2 that is absorbed in the water phase of the meat as carbonic acid.

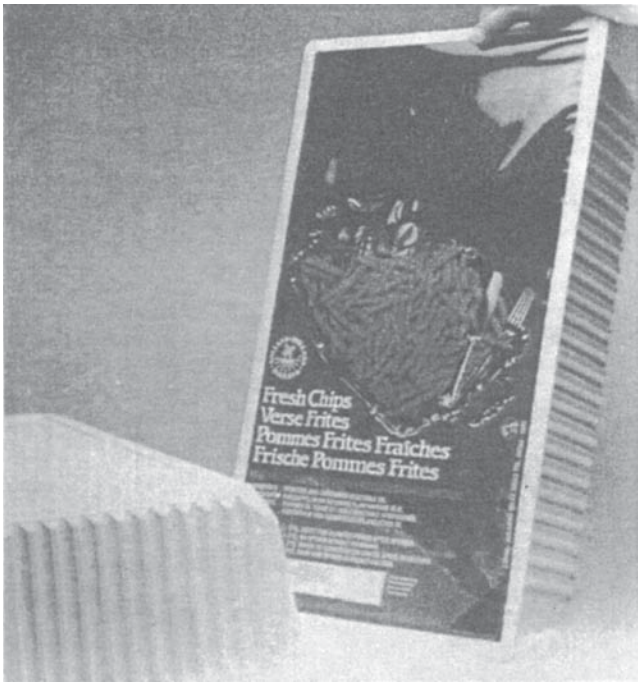

Figure 2. Modified atmosphere package for perishable foods. Fresh (unfrozen), precooked French fries (10 kg) packed in N_2 atmosphere. Positive (male) formed PVC/PE bottom, polyester/PE cover. Print registration of flexible upper web by means of stretching with a brake.

speed motor, frequency, servo driven, and so on (i.e., AC Digital, DC Digital, Geneva, Elliptical Gear, Planetary Gear, Emerson), differ as to accuracy of advance, acceleration curve, or suitability for print registration of stretchable or nonstretchable materials.

Thermoforming

This is the first step in the formation of a package. Thermoforming (see Thermoforming) may involve heating in the forming die or preheating in a separate station. There are two main ways to thermoform: positive (male) and negative (female). Female forming involves using compressed air or vacuum to pull the heated, softened film into a mold. It is this mold or concave surface that is the die that produces package shape and surface detail. A mechanical plug (plug assist forming) may help to push the film down into the cavity and provide more uniform material distribution.

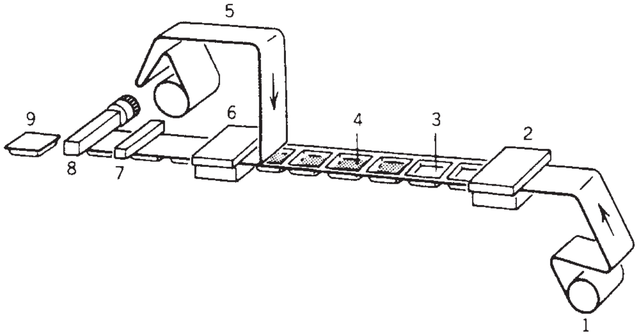

Figure 3. A schematic of the simplest and most basic configuration of a TFFS machine as would be used for flexible, not semirigid, upper and lower webs: 1, Lower or forming web; 2, thermoforming die; 3, formed, unfilled pocket; 4, filled pocket; 5, upper or lidding web; 6, vacuum/sealing die; 7, flying knife for across-the-machine direction package cutoff; 8, high-speed rotary knives for package cutoff in the machine direction; and 9, finished package (rectangular).

Positive (male) forming is the reverse. Positive forming usually permits the production of a package with greater surface detail and more-uniform wall thickness. A male die part operated by a piston provides package shape and surface detail. Air outside the film or vacuum on the inside, or both air and vacuum, force the preheated film to drape itself onto the exterior of the plug. Positive forming requires a separate station or two separate stations to preheat the film. A typical package requires thermoforming of only the lower web, but the machines can also form both lower and upper webs. Usually each product to be packaged requires its own separate forming die. Major machine manufacturers have designed and built thousands of different forming dies.

Loading

The lower web emerges from the forming station with the pocket formed and ready to accept product. The loading area must be long enough to accommodate the people required for loading and inspecting, or automatic loading equipment.

Sealing

Once the pockets on the web are loaded, the upper web is indexed over them and the two webs are sealed (see Sealing, heat). In food packaging, evacuation and, if needed, gas injection (through nozzle or pin gas mechanism) are performed at the sealing station. In order to provide a more attractive package, sometimes all surfaces of the top and bottom webs not in contact with the product are sealed to each other. Sometimes, using a patented process, steam is injected into the sealing die to shrink the lower web (forming web) around the product to form an attractive skin-tight package.

Cutting

Cutting systems range from the simple and inexpensive to the complex and costly: paper-cutting-type knives (i.e., flying knives and high-speed rotary knives); shear cutting (machine direction) with cross-direction strip removal by means of matched male and female dies; shear cutting (machine direction) and cross-direction cutting by means of steel rule dies; and complete package cutting with matched male and female dies (Table 2). Among them, matched male and female dies are the most suitable for cutting application on semirigid and rigid material, but they are also the most expensive compared to other cutting methods.

Table 2. Cutting Methods for Rigid Materials

In-the-Machine Direction	Across-the-Machine Direction
Squeezing knives	Steel rule dies with rounded corners
Shear cut knives with or without strip removal	Strip removal for rounded corners by means of matched male and female dies
Complete 360° cut by means of matched male/female dies	

Labeling and Printing

Online printing may consist of simply printing, or embossing, a code date or lot number (see Code marking and imprinting) or may consist of printing an entire index, actually "bleeding" finished package edges. Labels may be applied to either surface of either web by appropriate top or bottom web labeler.

VACUUM AND SEALING-DIE OPERATION

At this station the package is evacuated and the two webs are sealed together. In order to understand how this die operates, it helps to think of the die as consisting of two nesting, concentric boxes that close in sequence. The outer box closes first (see Figure 4). It mechanically seals off that portion of the package represented by the lower web. The upper web is narrower than the lower web and is not sealed at this stage. Therefore, until the inner box closes, atmosphere is free to enter or leave the package under the lip of the upper web. The inner box is made up of the seal mechanism. After the entire die chamber, including the interior of the package, is evacuated, the inner box (the seal mechanism) closes on both webs, first sealing them mechanically, so no air can enter or leave the package, and then applying a permanent heat-seal (see Figure 5). The key operation, package evacuation, takes place when air flows out of the package through the gap between the narrow upper web and the outer wall of the die chamber. This occurs during the interval after the outer box has sealed off the lower web, but before the inner box has closed off the package itself.

This is one of the most common methods of package evacuation, also called the narrow web vacuum method. If gas injection is required for modified atmosphere packaging, the operation takes place in the sealing die using nozzle or pin gas mechanism.

MATERIALS

The detailed design of a TFFS machine depends on the packaging materials to be run. Therefore, any discussion of how TFFS machines operate must refer to materials as well. The two webs consist of a bottom web and a top web on the type of equipment generally known as horizontal thermoform/fill/seal machines. In the usual case, the bottom web is thermoformable and is formed by heat into a cup or cavity, which forms a receptacle for the articles to be packaged. However, all variations are possible:

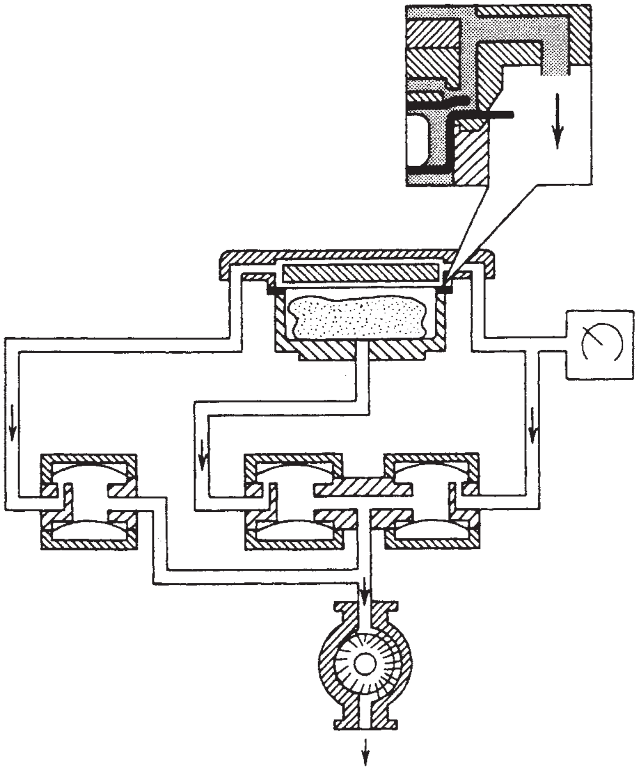

Figure 4. Evacuation. This shows the die after the first or outer box has closed. Vacuum is drawn inside the die chamber. Because vacuum is drawn on the outside of the package from both above and below, air pressure inside the package forces the two webs to separate, providing a large opening for air to flow out of the package. During evacuation, the travel of air from the inside of the package is through the gap between the narrow upper web and the wide lower web. Package air exits along with air from above the upper web. In this figure, the seal bar is in its upper, or retracted, position so that air can leave the package.

Top Web	Bottom Web
Nonformable	Formable
Nonformable	Nonformable
Formable	Formable
Formable	Nonformable

When food products are packaged, the webs are usually made of multilayer materials selected for their barrier and strength properties. Typically, a barrier material protects against transmission of water and oxygen into or out of the package. In the medical industry, however, products are typically sterilized by ETO (ethylene oxide) gas. In this case, high gas transmission is desired. As a result, the TFFS machines use an upper web (also called lidding material) (see Lidding) selected for high-gas transmission

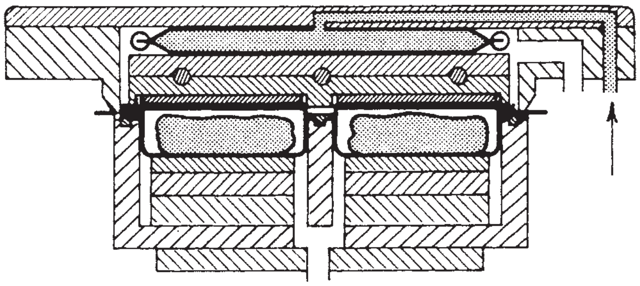

Figure 5. Heat sealing. After the package is evacuated, an air bladder lowers the sealing bar and the package perimeter is clamped shut and heat-sealed. In the next step, air is readmitted into the die, the die opens, and the package is indexed out.

properties as well as strength. Typical high-gas porosity (lower gas barrier) materials include paper and Tyvek (DuPont Company), a tough, spunbonded polyolefin. Tables 3 and 4 list some commonly used materials in TFFS applications.

Flexible materials such as nylon (see Figure 6) can usually be formed by heating and pressure-forming into a female die part. Cutting is usually by means of a flying knife in the cross-direction and high-speed rotary knives in the machine direction. More severe draw ratios call for a preheat station and plug assist. Nonrectangular shapes, such as circles and ovals, can be cut with a flying knife traveling on a cam or with punch cutter.

Rigid and semirigid materials (Figure 7) usually require higher cost and more-elaborate forming and cutting methods. Rigid films usually call for one or more preheat stations (single sandwich or double sandwich preheat) and plug-assist forming in order to meet the package performance and higher production speed requirement. If good surface definition and uniform wall thickness is required, positive (male-plug) forming is usually required.

In order to avoid sharp corners, rigid materials must be cut by one of the methods shown in Table 2.

LATEST TTFS MACHINE DEVELOPMENT

Sanitary, easy-cleaning, easy-to-use design in TTFS machine development has been emphasized by the leading suppliers in the past decades, especially for meat/food packaging industry in which complete wash down at the end of production prior to next production is required by the USDA. Sanitary equipment design is needed to ensure effective and easy cleaning to meet strict cleaning requirements. Aluminum frame machine has been completely replaced by all stainless steel frame machine against corrosion from caustic cleaning chemicals. In addition, the latest TTFS machine has curved panel and tilted cover to eliminate any possible harbors for bacteria growth that may pose a food safety risk to consumers. An automatic clean-in-place (CIP) feature is an option for the latest machine manufactured by Multivac, a leading machine supplier, if required. The interior of the machine can be thoroughly cleaned under a predesigned programmable automated cleaning protocol that includes four-stage cleaning and sanitation sequence to rinse, clean with

Table 3. Common Food-Packaging Webs[a]

Structure	Comments
Nonforming Web	
Polyester/polyethylene or polyester/ionomer	Polyester is used for printability, strength, and general resistance to moisture and abrasion. Normally it is reverse (capture) printed (i.e., the polyester is printed on its inside surface for protection of the printing). Printed polyester is normally stretch-registered.
These structures may contain an intermediate layer of PVDC or EVOH as oxygen barrier.	
Forming Web	
Flexible	
Usually a nylon-base web is used for strength and formability, combined with PE or ionomer as heat sealant and moisture barrier, and, if needed, PVDC or EVOH as oxygen barrier.	Forming of flexible web by compressed air, vacuum, or compressed air and vacuum possibly has a heated plug for severe draw ratios. Cutting by means of flying knife in the cross-direction (XD), and high-speed rotary knives in the machine direction (MD) for rectangular packages. Circular, oval, or shape cutting by means of flying knife following a pattern or cam or by punch cutter.
Rigid	
Semirigid PVC, acrylonitrile, amorphous PET, PETG, or HIPS, combined with PE or ionomer for moisture barrier and, if needed, PVDC or EVOH as oxygen barrier.	Forming of rigid web by either negative (female) forming with plug assist or positive (male) forming for more uniform forming and surface definition. Cutting by steel-rule die, or matched male and female die and strip removal in XD with shear, cut strip removal in MD. Complete cut by means of matched male and female dies shaped to the final package size.

[a] See Ionomers; Film, oriented polyester; Nylon; Nitrile polymers; Polyesters; thermoplastic; Polystyrene; Vinylidene chloride copolymers; Ethylene–vinyl alcohol.

Table 4. Common Medical-Packaging Webs

Structure	Comments
Nonforming Web	
Tyvek (spun-bonded polyolefin) or paper used for wet strength and resistance to puncture, also exhibits minimal fiber generation when cut. Paper is used for superior printability and lower cost.	Tyvek can be stretched registered (by means of photocell and brake). Paper cannot be stretch-registered, so it needs to be registered by controlling the advance with either an AC or DC servo drive. Stretch or advance registration.
Both Tyvek and paper are usually heat-seal coated. Used for ETO gas sterilization because of their porosity. Polyester or polyester/aluminum foil for gamma sterilization or gas or moisture barrier. These materials are used in conjunction with appropriate heat-seal coatings and laminating adhesives.	
Forming Web	
Flexible forming webs: polyolefin laminates or blends.	Forming methods are similar to those used in flexible food packaging. Shear cutting is normally used in both directions for superior cleanliness of cut with paper or Tyvek upper webs.
Rigid forming webs: PVC or acrylic multipolymer or high-impact polystyrene (HIPS) or copolyester.	Forming is typically with temperature controlled plug or positive forming depending on draw ratio and degree of surface definition required. Cutting, typically, matched male–female in across-the-machine direction. Shear cut in-the-machine direction. Or 100% matched male–female cutting. These cutting systems provide relatively particulate-free packages with radial corners.

foaming detergent, rinse, and sanitize with alcohol-based agent. Particularly the latest machine chain transport redesign by Multivac, the first one offered the CIP feature in the field, allows CIP features feasbile in their TTFS machines. Side extraction tooling change feature in forming and sealing stations is offered by leading TTFS suppliers that minimizes downtime and negative ergonomic impact from the tooling changeover process.

Figure 6. Sliced luncheon-meat package. Nylon-ionomer flexible forming web, OPET/ionomer top web. Circle cutting by means of flying knife. Print registration by means of stretching film with a brake.

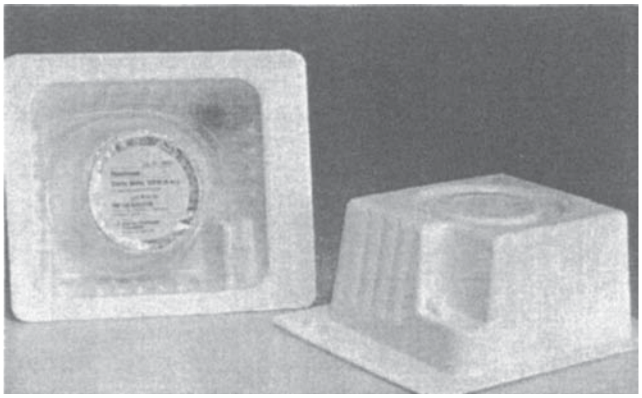

Figure 7. Thermoformed medical-kit package. Typically, this type of package would have a semirigid HIPS (high-impact polystyrene) thermoformed bottom and a Tyvek or paper lid. Forming would be positive (male-plug). Note both severe draw ratio and enhanced surface detail. Print registration would be by means of a dc drive since paper cannot be registered by stretching. Cutting could be a complete 360° cut with matched male/female dies, or shear cut (machine direction) with strip removal by means of matched male/female dies (cross-direction). Package is shown with lid removed.

Some major TTFS equipment suppliers to the United States market include Convenience Food Systems, Harpak, Multivac, Rapid-Pak and Ulma Packaging.

BIBLIOGRAPHY

E. Ho, "Thermoform/Fill/Seal" A. J. Brody and K. S. Marsh, eds., in *The Wiley Encyclopedia of Packaging Technology,* 2nd edition, Wiley, New York, 1997, pp. 910–914.

General References

Modern Plastics Encyclopedia, McGraw Hill, New York, published annually.

The Packaging Encyclopedia, Cahners Publishing, Denver, published annually.

The PMMI Packaging Machinery Directory, The Package Machinery Manufacturers Institute, Washington, DC, published annually.

Food Master, equipment, supplies & services, Food Engineering Network, Cahners, published annually.

J. M. Ramsbotton, "Packaging" in J. F. Price and B. S. Schweigert, eds., *The Science of Meat and Meat Products*, 2nd edition, Freeman, San Francisco, 1960, pp. 513–537.

THERMOFORMING

Vivek Chougule
Matt Piercy
Printpack, Inc., Williamsburg, Virginia

Thermoforming is a process of shaping thermoplastic sheet into a product through the application of heat and force. In most cases, the heat-softened plastic assumes the shape by being forced against the mold until it cools and sets up. Forming force may be developed by vacuum (atmospheric pressure), positive air pressure, or mating matched molds.

Thermoforming is an important thermoplastic fabrication process. Early developments involved thermoforming of cellulose sheets. Industrial scale thermoforming began in the early 1960s when containers and lids formed from high-impact polystyrene (HIPS) were first used by the dairy industry to package cottage cheese, sour cream, yogurt, and other dairy foods. The word *sheet* as it relates to thermoforming is used to describe flat extruded plastic material that is generally relatively thick, in contrast to comparatively thin plastic films. It is ambiguous, however, in two ways: Thermoforming is also used to shape relatively thin films, and the word *sheet* is also used to distinguish between thermoforming machines that form cut pieces (sheet-fed) rather than as extruded webs (web-fed or roll-fed). The distinction between sheet-fed and web-fed machines is similar to that between sheet-fed and coil-fed equipment in the metal-can industry. The exception is that in plastics forming, the wide sheet web can come either from coiled stock or directly from the extruder. When the thermoformer is fed directly by a sheet coming from the extruder, it is called in-line thermoforming. Sheet for thermoforming is commonly produced by extrusion. Use of multilayered sheet structures is increasing for a variety of applications. Multilayered sheet structures can be produced by coextrusion, coating, lamination, or a combination of these processes. Roll-fed thermoforming machinery is available that can produce beverage cups at rates of 75,000–100,000 pieces/h while consuming plastic sheet in excess of 1 ton/h (910 kg/h). Sheet consumption for larger and heavier containers can exceed 2 tons/h (1.8 metric ton/h), but unit production rates may be lower because fewer mold cavities can be mounted in the machines and more time is required to cool the thicker walls.

The ability to produce extruded HIPS foam sheet (see Foam, extruded polystyrene) has provided additional packaging markets for thermoforming. The first of these was meat and produce trays, followed by egg cartons. Other applications include fast-food carryout cartons, institutional dinnerware medical trays and blisters, and inserts for rigid boxes. Use of oxygen and moisture barrier thermoformed containers is on the rise for variety of shelf stable and refrigerated food packaging. Thermoformed plastic containers have rapidly replaced other packaging materials (metal, glass) in the last 20 years. Common applications include containers for fruit, apple sauce, puddings and baby food. One of the growing new applications is the use of high-barrier thermormed containers for retorted shelf-stable foods. Retort applications require special considerations for material selection, structure, and shape of the container.

PROCESS STEPS

The thermoforming process is used to make products from thermoplastic sheet by a sequence of heating, shaping, cooling, and trimming. Trimming is not necessarily an integral part of the forming cycle. Only a few applications (e.g., pharmaceticul blisters) can use the formed web without some kind of trimming.

Heating

Thermoplastic sheet is heated to a temperature range adequate for forming, depending on the thermoplastic material used. Temperature control is critical because of plastic's poor thermoconductivity and because temperature affects the forming characteristics (i.e., ductility) of the materials: Too much heat causes the sheet to flow without drawing; too little heat causes it to rupture early in the forming process.

Heating time is governed by the heating process used, materials used, sheet thickness, surface conditions of the material, and the combination thereof. Any of the common heat transfer processes such as convection, conduction, or radiation can be used, but low thermoconductivity and relatively high specific-heat capacity of thermoplastics should be taken into consideration. Radiation heat could be absorbed, transmitted, or reflected by thermoplastics, depending on radiation wavelength and material properties. Most thermoplastics absorb infrared energy emitted in the 3.0 to 3.5-μm wavelength range, which makes them ideally suited to heating by radiation. Convection heating would be ideal because the sheet could be soaked in hot air at just the right temperature with the assurance that the entire sheet would be uniformly heated. However, straight convection systems are not practical because they are relatively slow and they present materials-handling problems relative to transferring the sheet from the oven to the forming station. Conduction heating requires contact of a heated surface to the thermoplastic sheet. Although conduction heating by contact is more efficient than convection heating, it has unique challenges of material handling such as thermoplastic sticking to heated surface. Conduction heating is used in applications where thermoplastic requires relatively less heat to form or as preheaters where contact surface temperatures are relatively lower. Therefore, many thermoforming machines are equipped with systems that take advantage of radiation, convection, and conduction. Most of these ovens are electrically heated, but there are also a large number of cut-sheet machines using gas-fired ovens. Most are capable of heating the sheet from two sides, which is especially advantageous if the sheet is $\geqslant 40$ mil ($\geqslant 1$ mm). The ovens should also be appropriately zoned and temperature-regulated by instrumentation enabling the operator to maintain good control over the heating process.

Today, any number of electrically powered heating systems can be specified, including the conventional tubular steel rods, glass or ceramic panels, quartz lamps, emitter-strip panels, and small ceramic modules. The most common continues to be the calrod type, but use of rectangular ceramic elements has been steadily increasing. Their relatively small size permits them to be incorporated into elaborate microprocessor-control systems to provide preferential heating in localized areas. Emitter strip panels have been introduced as an alternative to provide temperature uniformity with a less-complex installation. They are gaining popularity because they provide a full-area heat source and can be mounted closer to the sheet and are operated at lower temperatures, thereby conserving energy.

Conduction or contact heating, sometimes called trapped-sheet heating, has been used successfully with easy-to-form materials such as polystyrene (PS) and PVC. Here, the plastic sheet is trapped between the mold and the temperature-controlled hot plate, which is perforated with extremely small holes [i.e., $\sim$0.020-in. (0.5-mm) diameter]. The holes are drilled in a grid pattern on $\leqslant$1-in. (2.5-cm) centers. After the sheet has been in contact with the heated plate for a predetermined time, compressed air is injected through the plate, forcing plastic off the heated platen and into the mold. This system is generally reserved for materials $\leqslant$0.015 in. (0.38 mm) thick.

Solid-Phase and Conventional Thermoforming

Solid-phase pressure forming (SPPF) means forming below the crystalline melting point—that is, generally 5–8% lower than melt-phase forming, depending on the material. For example, homopolypropylene (hPP) is formed in the melt phase at 310–315°F (154–157°C) but at 285–295°F (141–146°C) in SPPF. SPPF does not require special thermoforming equipment but demands much tighter process control. A thermoforming machine forms products within the thermoforming window, and product-configuration requirements (i.e., stress, strength, rigidity, flexibility) determine the proper temperature range.

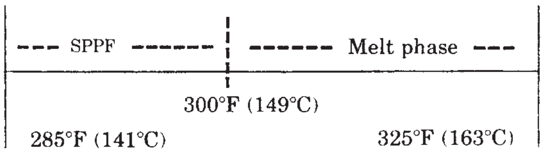

Figure 1. Thermoforming window.

Figure 1 indicates that SPPF is done in a temperature range within the window, as in melt-phase forming. Compared with products formed in the meltphase, SPPF can produce stiffer parts with lower part weight. Solid-phase forming improves the sidewall strength of a container and increases the stress factor. When forming cups, trimming in the mold is recommended. Plug assist and high form air pressures [i.e., 100 psi (689 kPa)] are required, and the plug design is more critical than in conventional melt-phase forming.

Forming

There are two basic forming methods from which all others are derived: (1) drape forming over a positive (male) mold and (2) forming into a cavity (female) mold. Product configuration, stress and strength requirements, and material specifications all play a part in determining the process technique. Generally, forming into a female mold is used if the draw is relatively deep (e.g., cups). Female molds generally provide better material distribution and faster cooling than do male molds. Malemold forming is preferred for certain product configurations, particularly if product tolerances on the inside of a part are critical. Male-mold forming produces heavier bottom strength; female-mold forming produces heavier lip or perimeter strength. An advantage of straight forming into a female mold is that parts with small sidewall angle (near vertical) can be formed and extracted, stress-free, from the molds because of the shrinkage that occurs as the part cools.

In drape forming, when the hot plastic sheet touches the mold as it is being drawn, it chills and start to set up. To successfully drape-form, several variables must be considered. One of the most significant is shrinkage. Since all plastic materials have a high coefficient of thermal expansion and contraction (i.e., about 7–10 times that of steel), care must be taken when designing the mold to provide sufficient draft on the sidewalls so the part can be extracted from the mold. It is not unusual for parts to rupture on cooling on an improperly designed drape mold. Another potential problem is that the part may become so highly stressed during forming and cooling that it loses most of the physical properties that the sheet would otherwise provide. High stress in the part may also cause shape distortion also known as warpage.

Natural-process evolution has combined the two systems to take advantage of the better parts of each method. The plug-assist process, similar to matched-die forming, involves a male mold (of plug) that ranges in size from $\sim$60% to 90% of the volume of the cavity. By controlling

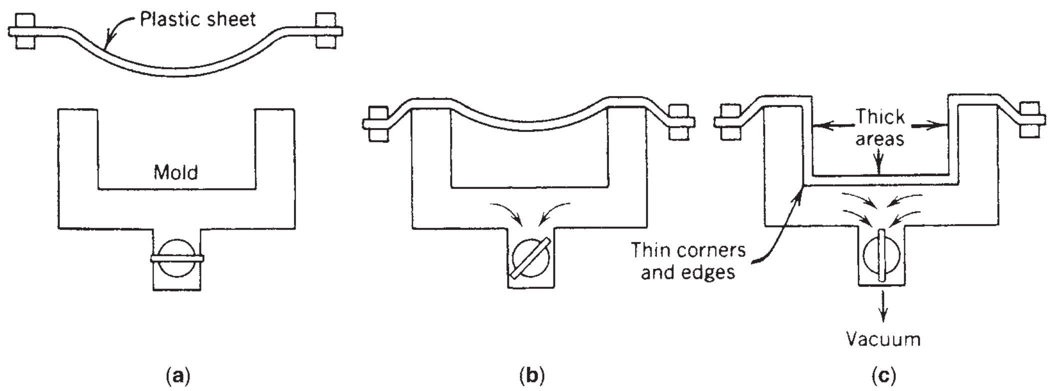

Figure 2. Shallow-draw forming, female-mold bottom. (**a**) The plastic sheet is clamped and heated to the required forming temperature; (**b**) a vacuum is applied through the mold, causing the plastic sheet to be pushed down by atmospheric pressure—contact with the mold cools the newly formed plastic part; (**c**) areas of the sheet reaching the mold first are the thickest. Applications: ice-chest lids, tub enclosures, and so on.

the geometry and size of the plug and its rate and depth of penetration, material distribution can be improved for a broad range of products. The plug-assist technique is used to manufacture cups, containers, and other deep-draw products.

Many thermoforming techniques have been developed to obtain better material distribution and broaden the applicability of the process. Some of the more popular methods are illustrated and described in Figures 2–10. Most of these techniques can employ vacuum, pressure, or a combination to apply the force necessary to shape the heat-softened plastic sheet.

Cooling

The time required to cool the heat-softened plastic below its heat-deflection temperature while it is in contact with the mold is often the key to determine the overall forming cycle time. Cooling is accomplished by conductive heat loss to the mold and convective heat loss to the surrounding air. Cooling rate depends on the tooling, because in all methods except matched mold, the plastic is in contact with the mold on one side only. Time duration for which the mold is closed after forming significantly affects cooling. The opposite side of the thermoformed part is cooled convectively by forced air or ambient air. Water sprays are sometimes used but often pose as many problems (e.g., water spotting) as they solve. Pressure forming helps minimize cooling time because the higher air pressure keeps the sheet in more intimate contact with the mold surface.

Trimming

A number of trimming methods are available, including hand cutting, rough shearing of the web, punching parts out from the web, or trimming around a periphery with a steel rule or sharp-edged die used to penetrate the web. The punch-and-die trim provides the greatest accuracy and longest life, but at the highest cost. These dies are usually designed with a hardened-steel punch and will pass through a slightly softer steel die that can be peened when it dulls. These trim dies are designed so the parts are punched through the die successively and exit from the trim station in a nested fashion. This simplifies the material handling required to pack or prepare the parts

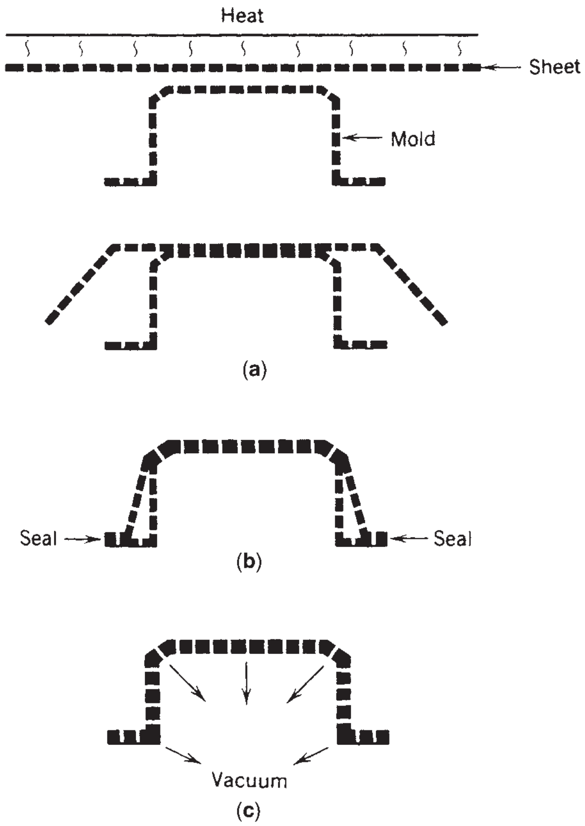

Figure 3. Vacuum (drape) forming. (**a**) The plastic sheet is clamped and heated to the required forming temperature; (**b**) the sheet is sealed over the male mold; (**c**) vacuum from beneath the mold is applied, forcing the sheet over the male mold and forming the sheet. Material distribution is not uniform throughout the part, because the portion of the sheet touching the mold remains nearly the original thickness. The walls are formed from the plastic sheet between the top edges of the mold and the bottom-seal area at the base. Applications: trays, tubs, and so on.

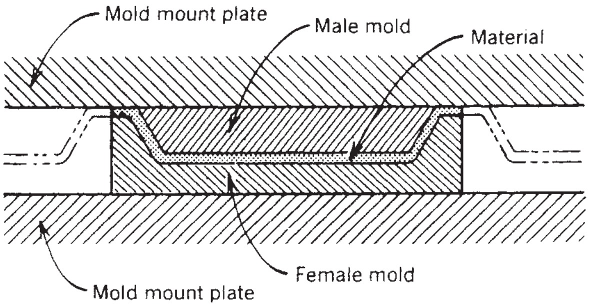

Figure 4. Matched-mold forming. The plastic sheet is clamped and heated to the required forming temperature. The heated sheet can be positioned over the female die, or draped over the male mold. The male and female halves of the mold are closed, forming the sheet, and trapped air is evacuated by vents located inside the mold. Material distribution varies with mold shape. Detailed reproduction and dimensional accuracy are excellent. Applications: foam products, egg cartons, meat trays, and so on.

for the next postforming operation (e.g., rim rolling or printing).

Steel-rule dies are better suited for the lower-volume, thin-sheet operations. Steel-rule trim dies are used predominantly in custom thermoforming operations, where the run size does not justify the cost of matched shearing dies. They are used almost exclusively in the manufacture of blister packages and decorative packaging for the cosmetics industry.

The trimming operation can be done inside or outside the mold. The remote-trim configuration utilizes a separate trim press, which punches out one or more rows of parts at a time. The parts are discharged in nested stacks ready for subsequent operations or for packing. Trimming within the mold provides the most accurate alignment of the trim cut to the formed part, but the close proximity of the trimming to the mold body is a complex arrangement that may limit cooling capacity near the cutting surface; and after trimming, precise control of the part ceases. Complex mechanisms are required to sort and nest these parts downstream. Trimming is done by sawing or routing in the production of low-volume odd-geometry industrial parts (e.g., boat hulls, recreational vehicle bodies, bathtubs) but not in packaging.

Forming Machines

There are basically two types of thermoforming machines: sheet-fed and web-fed (roll-fed). Sheet-fed machines operate from sheet cut into definite lengths and widths for specific applications. The sheet is generally heavy [i.e., 0.060–0.5 in. (1.5–13 mm)] and the products are industrial. Packaging-related applications include dunnage trays and pallets, large produce bins, shipping-case dividers, box liners, crates, and carrying cases formed to the shape of the product.

Packaging applications generally employ web-fed machines, which use either coil stock or a web that comes directly (i.e., in-line) from a sheet extruder. The need to form a coil limits the thickness of the web to ~0.125 in. (3.2 mm) due to sheet winding and reheating issues. Web thickness can be increased by operating directly in line with an extruder.

TOOLING

Among the plastic-fabricating processes, thermoforming permits the use of the broadest range of mold-tooling materials. Mold materials such as wood, epoxy, polyesters, or combinations thereof can be used if the volume is not sufficient to warrant the cost of advanced, temperature-controlled metal molds or for prototyping. For high-volume applications (e.g., food packaging) molds are normally manufactured from cast or machined aluminum, sometimes with hard coats applied to the wearing surfaces for longer service life. Molds are occasionally made from beryllium copper or brass that is chrome-plated for extended service life.

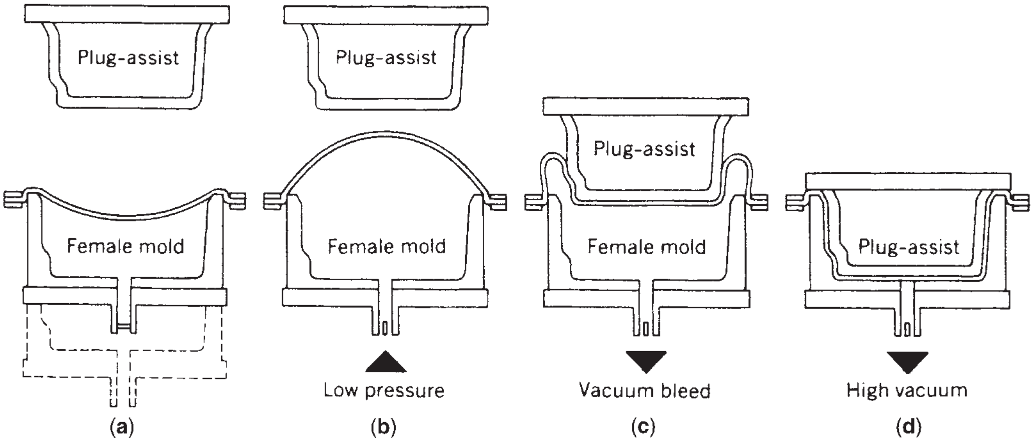

Figure 5. Pressure-bubble/plug-assist vacuum forming. The plastic sheet is clamped and heated to the required forming temperature. (**a**) The heated sheet is positioned over the female mold and sealed. (**b**) Prestretching is accomplished by applying controlled pressure through the female mold, creating a bubble. (**c**) When the sheet is prestretched to the desired degree, the male plug is forced into the sheet. (**d**) When the male plug is fully engaged, a vacuum is applied through the female mold to form the sheet. Pressure may be applied through the plug to assist forming, depending on the material and forming requirements. Applications: refrigerator liners, bathtubs, and so on.

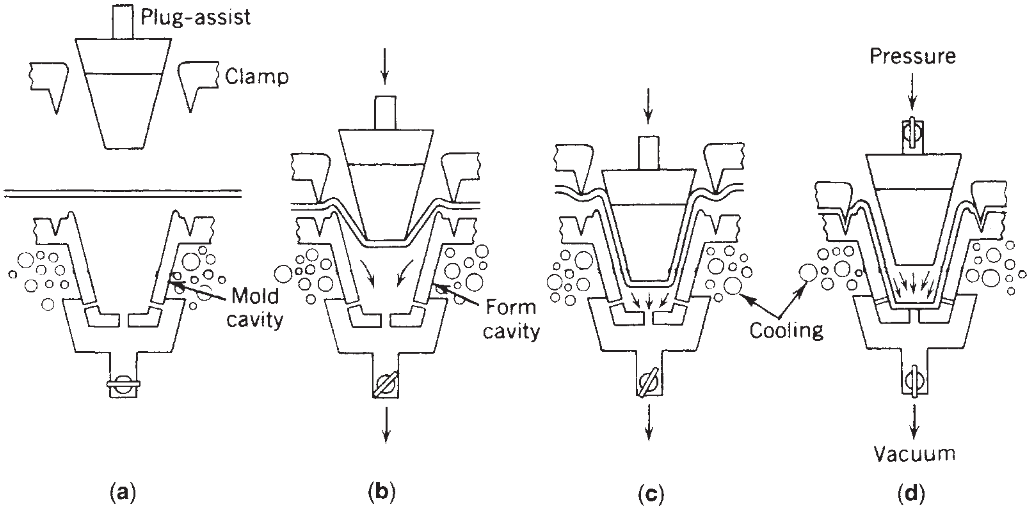

Figure 6. Plug-assist forming sequence: (**a**) The plastic sheet is clamped and heated to the required forming temperature—the sheet is then sealed across the female-mold cavity; (**b, c**) the male plug is forced into the sheet—the depth and speed of penetration, as well as plug size, are are the primary factors in material distribution; (**d**) when the plug is fully engaged, vacuum, pressure, or a combination are applied to form the sheet. Applications: cups, food containers, and so on.

Vacuum and compressed air are the primary means used to form the heated, thermoplastic sheet to the mold configuration with rigid-type materials. For foam materials, matched metal molds are frequently used to compress the material to the desired thickness without compressed air. Vacuum is transmitted through small holes that are located to allow the sheet to come in intimate contact with the mold surface. The diameter of these holes usually ranges from ~0.013 to 0.030 in. (~0.33 to 0.76 mm), depending on the type of thermoplastic to be formed. Other means of applying vacuum in the mold include the incorporation of narrow grooves or slots, which often are easier to incorporate than vacuum holes and allow greater evacuation of the air in the tool. Polyolefin materials require small vacuum holes and slots; PS materials, which cool faster, can use larger holes. Final product design and material selection determine the exact size of the holes required.

In addition to vacuum holes and slots, molds can be sandblasted to minimize the possibility of trapped air between the sheet and the mold. Sandblasting molds also results in mat surface finish and better cooling due

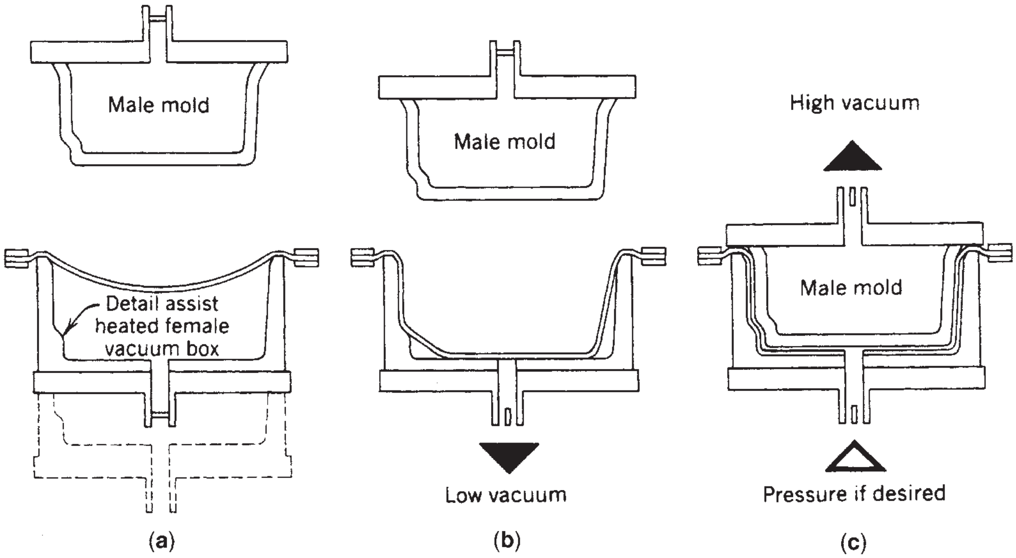

Figure 7. Vacuum snapback. (**a**) The plastic sheet is heated and sealed over the female vacuum box; (**b**) when vacuum is applied to the bottom of the vacuum box, the plastic sheet is prestretched into a concave shape; (**c**) after the plastic sheet is prestretched to the desired degree, the male plug enters the sheet. A vacuum is applied through the male plug while the vacuum box is vented, creating the snapback. Light air pressure may be optionally applied to the vacuum box, depending on the materials used and forming requirements. Applications: deep-draw parts (e.g., luggage, auto parts), gun cases, cooler liners, and so on.

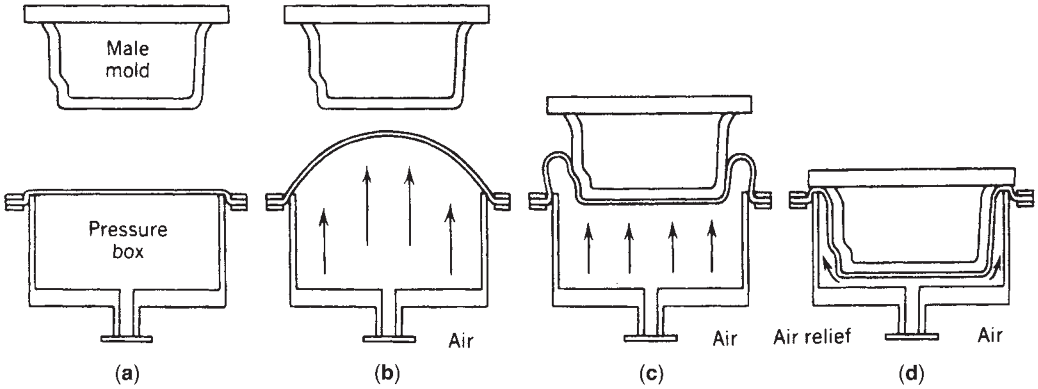

Figure 8. Pressure-bubble vacuum snapback. (**a**) The plastic sheet is clamped and sealed across the pressure box; (**b**) prestretching is accomplished by applying controlled air pressure under the sheet, through the pressure box, creating a bubble; (**c**) when the sheet is prestretched to the desired degree (i.e., 35–40%), the male plug is forced into the sheet while the air pressure beneath the sheet remains constant; (**d**) after the male plug is fully engaged, the lower air pressure is increased. A vacuum is simultaneously applied through the male plug, creating the snapback. Applications: intricate parts where material distribution is critical.

to higher surface area. Eliminating trapped air is important because it prevents imperfections on the part surface and aids in rapid transfer of heat out of the material by providing close contact between the plastic and the cavity. Molds for PS are normally not sandblasted because this material is relatively rigid and sandblasting would make part removal difficult. Vacuum is usually pulled through the forming mold, male or female, and the compressed air is introduced from the opposite side of the sheet material. In foam-forming with matched metal molds, vacuum is normally applied only through the female cavity.

Tooling for high-production applications is most often aluminum because of its thermal conductivity, light weight, and cost. Most crucial is thermal conductivity, because in any thermoforming process the residual heat of the plastic must be removed as rapidly as possible for rapid cycling. The temperature control of the mold is accomplished by water channels in the mold and designing them to provide maximum heat removal from the sheet. Ideally, all molds should provide a temperature differential between inlet and exit water temperature of no more than 5°F (3°C).

Many techniques are used to incorporate cooling in the molds for improved cycle times. The most common methods are contact cooling and direct water cooling. Contact cooling consists of coring a mold base and carefully machining cavity inserts so that contact occurs when the cavity insert expands from the heat of the plastic sheet while the mold base contracts from the coolant circulating through it. The most common method today for rigid HIPS is to circulate water through hollow-shelled cavities. This is more expensive but is the most effective way to cool the plastic sheet rapidly.

Tooling for low-volume work (e.g., box inserts, blisters, and other nonfood packaging) and prototyping can often be simple and effective without any of the special cooling features described above. This is because it normally takes longer to heat the sheet than to cool it, and the work is generally done on slow, low-production equipment that does not require the rapid cycle rates. With these molds, cooling is very often augmented by the use of fans to increase the air circulation over the material after it is formed. In such applications, low-cost, simple molds of plastic, plaster, wood, or other materials are used

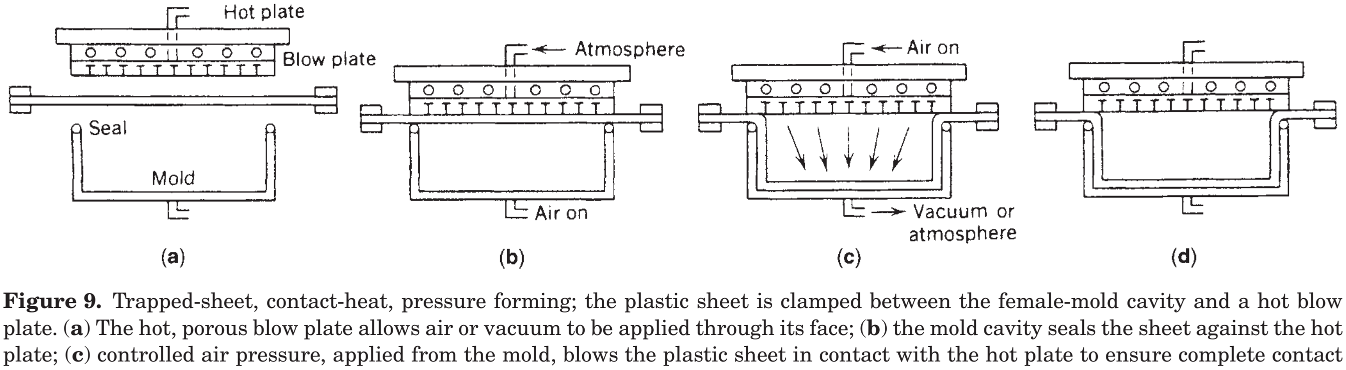

Figure 9. Trapped-sheet, contact-heat, pressure forming; the plastic sheet is clamped between the female-mold cavity and a hot blow plate. (**a**) The hot, porous blow plate allows air or vacuum to be applied through its face; (**b**) the mold cavity seals the sheet against the hot plate; (**c**) controlled air pressure, applied from the mold, blows the plastic sheet in contact with the hot plate to ensure complete contact with the heating surface; (**d**) when the desired heating has been accomplished, air pressure is applied through the hot plate, forcing the plastic sheet into the mold. Venting of the mold can be simultaneous, depending on materials and forming requirements. Steel knives may be inserted in the mold for sealing and in-place trimming if additional closing pressure is available. Applications: OPS containers, covers, and so on.

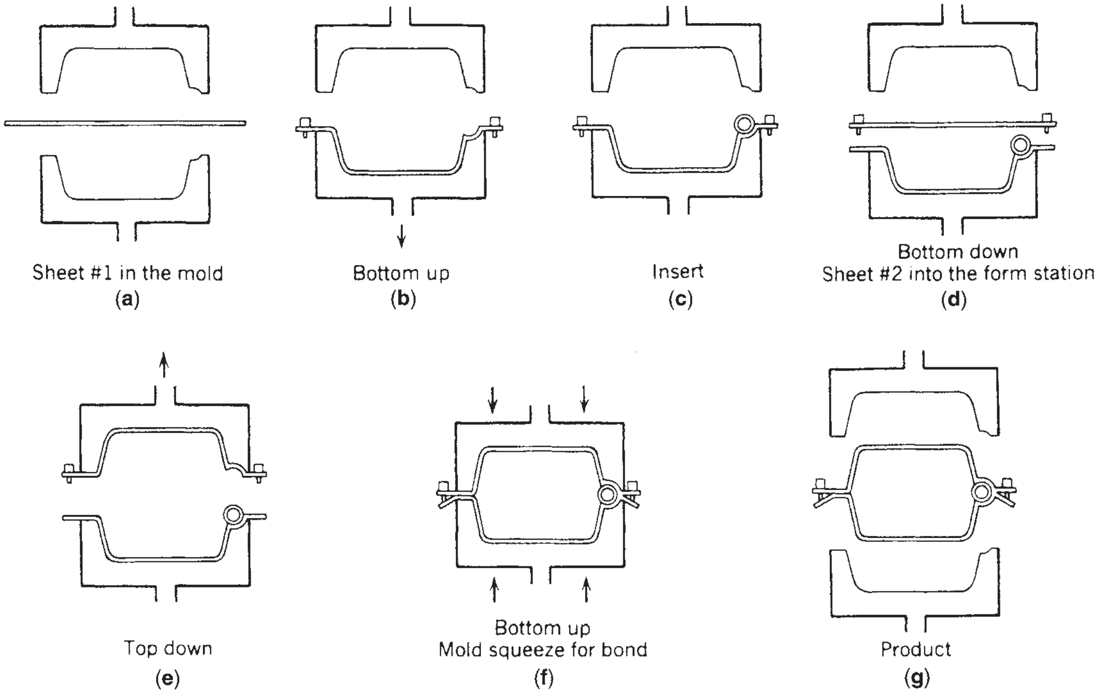
Sheet #1 in the mold
(a)
Bottom up
(b)
Insert
(c)
Bottom down
Sheet #2 into the form station
(d)
Top down
(e)
Bottom up
Mold squeeze for bond
(f)
Product
(g)

Figure 10. Twin-sheet forming. This technique utilizes a rotary-type machine with two heating stations and bottom-load clamp frames. The first sheet (**a**) is heated and formed into the lower half of the mold (**b, c**) while the second sheet is being heated. After forming the first sheet, the second sheet is indexed into the forming station (**d**) and vacuum is applied to the upper mold half to form the sheet (**e**). A bond is simultaneously made between the parts by pressure applied to the mating surfaces (**f**). After cooling, the molds are removed to give the product (**g**).

effectively. Mold dimensions must allow for the different shrinkage rates of different types of thermoplastics. In the manufacture of a family of products, it is sometimes possible to utilize the same cooling base and interchange only the molding inserts. Depending on the trim dimensions of the products, the same cutting tool might be suitable for more than one product; if not, they can be designed to be easily interchanged from the trim die shoe.

CUT-SHEET THERMOFORMING

Cut sheet is processed on two types of thermoforming machines: the shuttle style and the rotary, or carousel, style. In single-station shuttle machines, the plastic sheet is placed in a clamping frame that shuttles into the oven for heating and back again for forming. Another very popular shuttle machine is the double-ender, which has a common oven with a form station at each end. This arrangement provides 100% utilization of the oven because heating and forming can be done simultaneously.

Rotary or carousel thermoformers are most frequently used for heavier-gauge materials—that is, starting at ~0.050 in. (1.3 mm). Most rotary machines have three working stations: load/unload, heat, and form. In a typical machine, the carousel frame rotates 120° on a time-controlled basis. Generally, the time cycle is dictated by the period required for the plastic sheet to cool below its heat-deflection temperature. When cooling time is faster than the heating time, four-station rotary machines are often used; these have two heating stations. Another type of four-station machine has a separate load and unload for automation and parts handling.

Most cut-sheet thermoformers are designed to operate as vacuum formers, but rotary and single-station (shuttle-type) machines are available with pressure-forming capabilities and sustain forming pressures up to 50 psi (345 kPa), depending on mold area. Most sheet-fed machines can be adapted for any of the standard thermoforming techniques. Cut-sheet machines have been built to accept sheet 10 ft (3.05 m) wide and 20 ft (6.1 m) long with the capability of making parts up to 4 ft (1.22 m) deep.

TWIN-SHEET THERMOFORMING

Twin-sheet thermoforming can produce hollow parts (e.g., pallets) from cut sheet. These parts can be produced from both cut-sheet and roll-fed machinery. In sheet-fed machinery, the material to be formed can be 0.050–0.500 in. (1.3–13 mm) thick. Roll-fed machines are limited to materials 0.005–0.125 in. (1.3–3.2 mm) thick. With a typical web-fed, twin-sheet system, two rolls of plastic materials are simultaneously fed, one above the other. The webs are transported through the oven on separate sheet-conveyor chains and heated to a formable temperature. At the forming station, a specially designed blow pin enters the space between the two sheets before the mold closes. Air pressure is introduced between the sheets through the blow pin, and, at the same time, vaccum is applied to each mold half.

Twin-sheet forming is done by a slightly different method on specially designed rotary thermoformers.

EQUIPMENT IMPROVEMENTS

Rapidly expanding markets for thermoformed products are attributable to technological advancements in equipment design. Most of the development is focused on continuous roll-fed machines for packaging. New productivity enhancements such as bigger machines, faster cycles, quicker changeover, and greater automation are gaining in importance. Better process control has enabled converters to increase productivity and improve product quality. Use of microprocessor-control systems allows the operator to enter data, examine existing values in the program, or troubleshoot problems by viewing a monitor. The conventional control panel includes a cathode-ray tube (CRT) and keyboard, form-on and emergency stop push buttons, and indicator lights to signal form or automatic modes. Machine functions may be displayed on the CRT upon request, and function control is obtained by means of the simplified keyboard. The newer systems use touch screen LCD panels.

The microprocessor-control systems feature control of oven-temperature orientation in multiple zoned ovens, interface speed between former and trim press, sheet-index length, machinery functions and timing, and control and graphic display of start end points of forming functions, storage of production information, and diagnostic capabilities. Use of the microprocessor results in tremendous savings in labor, energy, and downtime. Many of these systems are available as a retrofit to existing equipment. Equipment has also been designed to monitor several lines of similarly equipped machines from one central location. Such data-management systems provide comparative data, setup parameters, production rates, maintenance schedules, alarms and safety signals, and storage of reference information, resulting in a true on-line management-information reporting system.

Design improvements that have contributed to improved productivity include redesigned forming presses that provide front and rear access to the forming station to facilitate tooling installation and periodic maintenance; access doors to oven heaters for quick cleaning; ovens that eject automatically if the sheet overheats; and automatic lubrication systems that increase component life substantially and allow faster mechanical operation due to reduced friction.

Microprocessor heating control allows the operator to control the temperature profile of the sheet from edge to edge or to provide localized heating. Solid-state instruments used in conjunction with mercury or semiconductor-controlled rectifier (SCR) relays have made it possible to maintain extremely close heater temperature control.

Forming presses are now available with precision guidance systems on the platens to permit critical operations to take place in the forming molds that formerly had to be done on auxiliary equipment. An example is the method of incorporating the latching slots that are cut in the sidewalls of egg cartons, fast-food cartons, and trays. Previously, these slots were punched in on a special press located downstream from the forming station. Registration problems relative to the slot location were often encountered because of variations in the index length by the thermoformer web-conveyor system. These problems were overcome by expensive drive systems. On machines with precision-guidance systems, mating punches can be incorporated in the forming molds that engage during the last 5–10% of press closure and form a slot in the heat-softened plastic that has reinforced edges similar to button holes.

High-speed trim presses are available with supported moving platens that carry up to 85% of the gross-platen and trim-tool weight. The advantage of this system is that it permits the press tie rods to function primarily as guidance members rather than as both platen transporters and guides, in addition to serving as tie rods. The system reduces trim-tool maintenance by up to 50%.

Significant improvements have been made in product-handling systems, which can now automatically count, stack, and package products at the trim-press discharge. The design of these automated systems varies from relatively simple systems using guide chutes or magazines and transport conveyors to those employing robotics and advanced packaging machinery.

Automation has been extended to the materials handling of large plastic sheets into sheet-fed machines. The development of automatic sheet loaders provides automatic loading systems that enable use of the entire machine area. This results in a 20–30% increase in productivity, achieved largely from savings in loading time, since a manually loaded machine normally used only one-quarter of the machine effectively.

IN-MOLD LABELING

Unlike injection molding for which in-mold labeling (IML) is a very well established process, thermoforming process has challenged IML to address several important limitations in machinery and labeling technology that. Use of IML for thermoformed products is on the rise in recent years with development of automation and labeling technology. Even with the current improvements in output, there still remains a gap between IML thermoforming versus the productivity of conventional thermoforming. For example, IML slows down the process reducing output to 20 cycles/min versus 40 cycles/min for standard thermoforming of PP cups. Most of the current machines for IML incorporate tilting-mold technology, which provides greater accessibility and easier label placement. Another new technology for IML uses a dual-mold configuration instead of a tilting mold. The dual-mold system allows removal of the finished part and placement of the label in one mold while a part is being formed in the other mold.

In-mold labeling (IML) is a technique that typically uses a heat-activated adhesive applied to the paper or film label backing. The in-mold label is placed in a mold and held in place by vacuum, electrostatic attraction, or other means. The mold is then closed and the part is produced as normal. The adhesive's activation takes place during the manufacture of the packaging itself via thermoforming. The label becomes molded to the container wall. The material used for in-mold labels is generally paper or film. It must have sufficient temperature resistance and stiffness to resist the rigors of the molding operation. The adhesive that is utilized is generally heat-seal coating adhesives. Depending on the packaging and labeling materials, the in-mold label may not even require an adhesive. The container resin itself will, in certain cases, provide the adhesive material necessary to firmly and permanently attach the label.

One of the advantages of IML is that the label appears as part of the container compared to a label that is applied by conventional (e.g., pressure sensitive adhesives) techniques and appears above the surface of the container. Thus, the in-mold label has greater consumer shelf appeal. IML also eliminates the need, equipment, and labor required of a separate labeling process. Other advantages of IML include reduction in container weight (the IML provides structural as well as decorative value, allowing as much as 10–15% reduction in package weight) to provide improved container sidewall strength and better squeeze resistance.

High-density polyethylene (HDPE), polypropylene (PP), polyester, and polyvinyl chloride are the most common container resins that are used with in-mold labeling. Among the wide variety of consumer products packaged with in-mold labels are laundry products, household cleaners, personal care products, automotive products, agricultural and garden products, food, and beverages.

BIBLIOGRAPHY

V. A. Chougule and M. N. Piercy, "Thermoforming" in K. L. Yam, ed., *The Wiley Encyclopedia of Packaging Technology*, 3rd edition, John Wiley & Sons, Hoboken, NJ, 2009, pp. XYZ–XYZ.

L. McKinney, W. Kent, and R. Roe, "Thermoforming" in *The Wiley Encyclopedia of Packaging Technology*, 1st edition, John Wiley & Sons, New York, 19XX, pp. 668–675.

General Reference

"Thermoforming Techniques" in J. Agranoff, ed., *Modern Plastics Encyclopedia*, McGraw-Hill, New York, 1990.

TIME TEMPERATURE INDICATORS

R. Paul Singh
Department of Biological and
Agricultural Engineering,
University of California, Davis,
California

Temperature is one of the key environmental factors influencing the storage stability of a food product. For most foods, an increase in storage temperature causes a reduction in their storage life. To determine the deleterious effects of temperature, it is often necessary to know for how long a food is exposed to that temperature. The cumulative effects of temperature and time cause irreversible changes in foods. In the commercial food-distribution chain, specific guidelines for temperature management have been developed. However, when these recommended temperature guidelines are not met, food quality is seriously impaired. Time-temperature indicators (TTIs) are devices that provide useful information regarding the temperature history experienced by a food during storage and distribution.

A food material may undergo physical, chemical, or microbiological change during storage. When these changes accumulate to such an extent that they exceed some predetermined criterion of acceptable quality, the food is considered to have reached the end of its shelf life. A variety of changes such as color, flavor, and texture may lead to the end of a food's shelf life. Similarly, the microbiological changes may render a product unsafe for human consumption. In such cases, a monitoring system that allows an early warning of the approaching undersirable increase in the microbial level would be necessary. The common practice in the modern food-distribution system is to use some type of open dating that indicates the expiration of the shelf life of a product. The open-dating policy assumes that a product has been kept at the recommended temperature. However, if the temperature during storage and distribution exceeds the recommended conditions, the open-dating policy fails. In these situations, TTIs are more suitable predictors of product's shelf life (see also Shelf life).

A TTI affixed to a food package undergoes a temperature history similar to that of food. The indicator response is measured through some physical means, or a certain property of an indicator may change, causing a visually discernible response. The indicator response may be a change in its color such as green to yellow or a change in light reflectance measured with special instruments, or there may be an advance of a boundary between two different colors that is observed visually. When the change in the property of an indicator is irreversible and cumulative with time and temperature exposure, the indicators are referred to as time-temperature integrators, full-history TTIs, or all-temperature TTIs. For certain applications, the indicators may be designed to respond only when the food is exposed to temperatures above some preselected threshold level, thus giving a partial history of the storage period. These types of indicators are called partial history TTIs or threshold-temperature TTIs. The TTIs respond at a rapid rate when the temperature goes up, and their response slows down as the temperature decreases.

For a TTI to correctly predict the end of the shelf life of a food, it must be able to accurately mimic the kinetics of the product quality. Therefore, the first step in the selection of a TTI is to identify one or more quality attributes of a food that are the key determinants of the shelf life of a food. The next step is to quantitatively determine their kinetics. For example, if a food material undergoes an undersirable change in color due to storage at temperatures higher than ideal, and the off-color makes the food unacceptable, then the kinetics of color change in the food, as influenced by temperature, must be known (1).

The kinetics of quality change in a food material is usually expressed by the rate constants. For example, if the change in the attribute is described by a first-order reaction, then the magnitude of the first-order rate constant will indicate how rapidly the attribute may be undergoing change at that temperature. The rate constants are usually determined for at least three different temperatures and then combined into the Arrhenius equation to relate rate constants to temperature. Another common way to express shelf-life kinetics is to use the Arrhenius expression as follows:

$$t_{\mathrm{s}} = Ae^{-\frac{E_a}{RT}}$$

where t_{s} is the shelf life (days or months), A is a constant with same units as t_{s}, T is temperature (K or $^{\circ}\mathrm{C} + 273$), R is a constant (0.001987 kcal/(mole · degrees), and E_a is the activation energy (kcal/mol). If the shelf life of one temperature (T_1) is known, the above equation may be used to estimate the shelf life of the same product at a different temperature (T_2) as follows:

$$t_{\mathrm{s2}} = t_{\mathrm{s1}}\, e^{-\frac{E_a}{RT}\left(\frac{1}{T_2}-\frac{1}{T_1}\right)}$$

From the Arrhenius equation, one obtains the activation energy of a reaction or shelf life. The Arrhenius equation is also used to predict the shelf life at any unknown temperature. The shelf-life data and the activation energy are the key design parameters for a TTI. It is absolutely essential that the activation energy of a TTI match the activation energy of the quality attribute of concern. This equality in kinetic parameters allows the TTI to reach the same level of change as experienced by a food material when exposed to identical storage time and temperature.

The commercially available TTIs use either a biochemical reaction between an enzyme and a substrate (Figure 1), a polymerization reaction in some material resulting in a highly colored polymer (Figure 2), or diffusion of a dye along a wick (Figure 3). In each case the reactions are temperature-dependent and the rates of reactions are carefully controlled by controlling the concentration of the indicator's constituents. Some of the indicators are activated at the time of manufacture, requiring their storage at ultralow temperature until they are affixed to a product package. Other indicators are activable at any desired time, such as when the TTI is fixed on a package at the start of the distribution chain.

TTIs differ in how they display their response to time and temperature. A TTI based on biochemical reactions involves a pouch containing an enzyme and a substrate that are initially kept separate by a thin seal. At the time of activation, the seal separating the pouch contents is broken and the contents are mixed. The pouch is made of a transparent film and is placed inside a plastic sleeve with a window. As the enzymatic reaction in the pouch proceeds as a result of the combined effect of temperature and time, the pH of the mix changes, resulting in a change in color. The user observes the color of the pouch's contents to determine the time–temperature exposure. In another type of TTI, the movement of a dye along a wick is indicative of time and temperature exposure because the diffusion process is temperature-dependent. A rectangular wick is typically sandwiched inside an outer sleeve that contains viewing holes and an appropriate scale. The advance of the dye along the wick is visually observed and related to the extent of the reaction. Another method used to display the indicator response is the use of a bull's-eye concept. In this case an indicator is located at the inner circle, while a surrounding ring is painted with a color that is eventually reached by the indicator when the shelf life of the product is deemed to have expired. In this type of a TTI, a user compares the color of the indicator seen in the center with the color of outside ring(s) as shown in Figures 1 and 2.

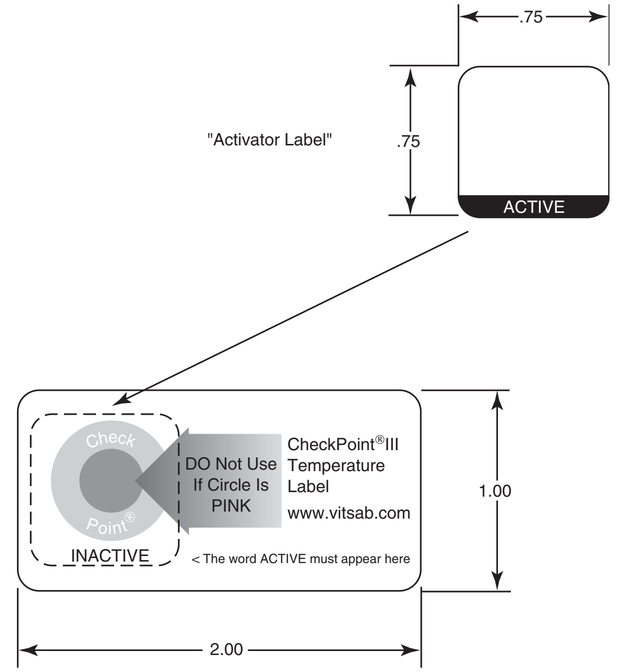

Figure 1. Check point III® temperature label (dimensions in inches) (http://www.vitsab.com/Products2.htm).

TTIs are useful in implementation of inventory management policies other than the commonly used first-in-

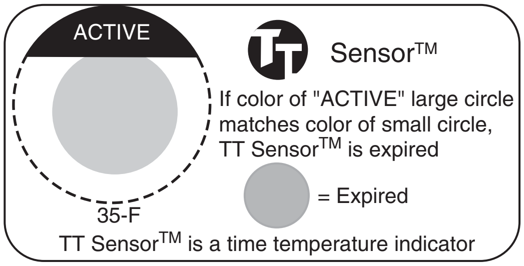

Figure 2. Time–temperature indicator label (http://www.globalspec.com/FeaturedProducts/Detail/TIPTemperatureProducts/TimeTemperature_Indicator_Labels/32742/0).

Figure 3. 3M™ Monitor Mark™ time–temperature indicator (http://www.3m.com/product/information/MonitorMark-Time-Temperature-Indicator.html).

first-out (FIFO) policy. The time-based FIFO policy fails when the food-chain temperature exceeds certain critical limits. In such cases, time–temperature-based policies such as shortest remaining shelf life (SRSL), using the TTIs, offers several advantages (2). For example, SRSL policy ensures more consistent quality at the final consumption of food items that may have been exposed to different abusive temperature conditions during storage and distribution. In the SRSL policy, using TTIs, those foods that receive an elevated temperature exposure are moved more rapidly through the system.

The TTIs are smart labels that offer a new and improved method to manage the food storage and distribution system, with the ultimate goal of providing a higher-quality food for the consumer.

BIBLIOGRAPHY

1. P. S. Toukis, B. Fu, and T. P. Labuza, "Time–Temperature Indicators," *Food Technol.* **45**(10), 70–82 (1991).
2. J. H. Wells, and R. P. Singh, "The Application of Time–Temperature Indicator Technology to Food Quality Monitoring and Perishable Inventory Management" in S. Thorne, ed., *Mathematical Modeling of Food Processing Operations*, Elsevier Applied Sciences, London, 1992, Chapter 7.

TOTAL QUALITY MANAGEMENT

Mark B. Eubanks
MBE Associates, Alpharetta,
Georgia

OVERVIEW

Since the early 1980s the packaging industry, as well as other industries, have been working with an organizational concept called by various names but generally referred to as *continuous quality improvement* or *total quality management*. And, as with other industries, the degree of success among packaging companies that use the process ranged from successful to not so successful.

A significant problem for the packaging community has been its traditional view of quality as an internal process focused on compliance to regulations and/or specifications. This issue is particularly true of segments that deal with the food, beverage, and pharmaceutical markets. As a result, the industry has maintained much of its historic dependence on quality control, quality assurance, and technical audit concepts. Statistical process control now is used broadly; however, this control has been seen as a technical tool rather than as a management process.

Also, generations of managers had been taught to believe that quality was for specialists and certainly not for executives and that the results of quality techniques were not the appropriate concern of the total organization.

In the last three years, certain elements of the general news media, industry press, and the consulting profession have proclaimed that "TQM is dead." These same pundits also would say that if a ship misses a harbor and runs aground, then it is the harbor's fault. What we have seen as an industry is the need to refine the concept of quality and apply it as a management system aimed at managing change and optimizing business performance.

It is the purpose of this article to present a summary of lessons learned from past experiences of companies that use quality management and the key success factors that will enable organizations to satisfy customers, involve employees, improve work processes, and increase profits.

MANAGING CHANGE

A strong negative perception of quality management is that it takes too much time to effect a change in the way companies do business and obtain positive results. Certainly one of the primary lessons learned from the experiences of businesses large and small is that the quality process must be managed with short- and long-range objectives in mind.

This observation is especially true of the packaging industry. With the tremendous changes occurring in industry consolidation, materials substitution, processing and distribution technology, global competition, intensified government regulation, and environmental concerns, no organization can afford to spend years waiting for major improvements to take place in operating results. One industry response to this situation has been reengineering, which has had mixed results to say the least.

The fact is that, although it does take time to complete a culture change in all except the smallest companies, it is not true that *results* need to be a long time in coming.

Identification and quantification of improvement opportunities within critical processes can be accomplished within weeks of the start of a quality initiative. Common analysis techniques employed include process mapping, value-chain analysis, activity-based cost of quality benchmarking, customer service measures, and variability studies. Cross-functional teams of internal subject matter experts can be educated quickly in advanced problem-solving methodologies and can be supported by specialized software to facilitate planning, decision making, and project tracking, reducing or completely eliminating the need for time-consuming status review meetings. Many companies have shown dramatic results in six months' time.

A ROSE BY ANY OTHER NAME

One important principle is so straightforward as to be considered trivial by some. *Focus on organizational and business results and do not worry about what the process is called*. Many organizations fall victim to the name game and fail to endorse quality management because of the negative stigma associated with "TQM."

The U.S. General Accounting Office report, released in May 1991, was one of the first studies that linked certain organizational competences to improved business results (1). These positive characteristics are further defined in the criteria established by the Malcom Baldrige National Quality Award. If customer focus, cost reduction, employee participation, and competitive advantage are among an organization's desired results, then the name of the process used to achieve these results should not be a major concern.

A STRATEGIC IMPERATIVE

Quality is not a function but a strategic plan for change. Corporate leadership must ensure that quality is defined and integrated into the strategic plan at all levels of the organization. Several areas are critical and are as follows:

Leadership—executives must provide vision, direction, resources, ongoing personal support, and must remove cultural obstacles.

Commitment—executives first must understand the positive business results to be expected from quality management, and they must establish and deploy policies that guide the organization toward the realization of these results.

Evaluation—all levels of management must evaluate the quality process systematically using measurements appropriate to each level.

ALIGNMENT

For quality-management processes to produce superior business results, all functions, areas, systems, processes, groups, and individuals must operate congruently. Internal capabilities must match customer needs. Marketing and sales plans must be based on customers' expectations for product and service excellence rather than on quotas or commission schedules. Financial plans must reflect an investment in customer satisfaction and employee involvement, not just an abstract reference to bottom-line results. Employees must be educated and dedicated to performing their roles in the business, and they must understand the rewards that they, and their workgroups, will receive for minimizing waste and improving their work processes.

CUSTOMER FOCUS

Virtually all companies have learned to say that they are customer-driven. And it is generally agreed upon that the packaging industry has gotten closer to its customers. However, abundant evidence exists that the voice of the customer may not be heard as clearly as it should be throughout many companies.

Communication with customers is one of the major areas where important lessons have been learned over the past decade. Customers were at one time considered to be the responsibility of a few groups or individuals within a company. Typically, this position was a sales/marketing function with some top managements that join in for key accounts. Today, everyone in an organization must be able to listen for and respond to customer messages.

Successful organizations use a variety of tools to monitor present and future customer needs and expectations—surveys, focus groups, formal and informal audits, quality-function-deployment models, and decision matrices, to name a few The old comment, "We know what the customer wants," without actual use of actionable customer data, is being heard less and less.

The key principles are to identify and translate customer requirements from broad categories, e.g., "customer satisfaction," "superior quality," and "competitive price," into specific work-process improvements all levels of the organization can implement.

FINANCIAL IMPACT

One of the major reasons given by senior managers for their disaffection with quality-management process is that a financial payoff does not exist. This attitude is disturbing to quality professionals, because quality management can have a major impact on bottom-line results and stakeholder value.

In their widely quoted book, *The PIMS Principles*, Gale and Buzzell present a compelling case that quality has a major positive effect on market share and profitability (2). Financial impact tools—cost of quality, customer value analysis, and others—have been available for many years but are under used for several reasons, which are as follows:

- General fear or distrust of measurement in general.
- Traditional accounting systems do not lend themselves to process costing.
- Data-collection systems are considered too complex to maintain.
- Cost-of-quality systems are considered to be an extension of the finance function.
- Employees are not properly educated on the use of the financial impact system.

- No constructive action is taken once the data are gathered.
- Interdepartmental turf issues prevent cooperation.
- Financial impact systems are used for punishment or are not linked to compensation.

Financial impact systems are vital to the continued success of quality management processes. They provide a primary means of measuring business success, secure management's involvement and support, and help to identify and prioritize opportunities for improvement.

EMPLOYEE INVOLVEMENT

The word "employees" in the subheading above refers to all individuals in the organization, from senior management through all levels of the workforce. All individuals require an understanding of the quality process and their role in the new culture. They should be aware of several factors that includes the following: the common language of quality, how to apply the concepts to their jobs on a day-to-day basis, and the use of selected skills such as problem solving or statistical process control to cause improvements to happen in their workgroups.

Quality tools and skills are organizational, managerial, individual, and technical. Most organizations concentrate on implementing individual and technical tools before they do anything about the organization and its management. This issue occurs when the senior management does not understand the philosophy behind the quality process. Executives and managers want to satisfy customers in an effective manner, but they must also learn to see quality as a system, and they must learn their role in the system.

When employees have learned their roles, tools, and techniques, they must then be formally (and sometimes forcefully) able to use this knowledge to carry out the business objectives of the company. Many companies are frustrated when recently educated employees fail to participate actively in the quality process. The reasons are clear and include the following: employee involvement was not a part of the traditional corporate culture; they did not understand that they had permission to get involved; they did not see this new behavior as consistent with what their supervisors were doing; they did not know how they fit into the new quality plan; and they had not been convinced of what their benefits would be if they participated.

Next to the lack of sustained management commitment for the reasons cited in the "Financial Impact" section, the biggest obstacle to most companies in achieving success in their quality processes has been the lack of employee involvement. The keys are education, recognition, and compensation.

CUSTOMER–SUPPLIER RELATIONSHIPS

Many packaging companies have established successful partnerships with their key customers and suppliers. Several elements are vital to establishing such productive relationships.

As a part of their strategic planning process, successful companies involve customers and suppliers extensively in planning for new and improved products as well as higher levels of product and service performance. Systems, such as quality-function deployment, aid customers and suppliers in matching customer needs with supplier capabilities and communicating these factors throughout both organizations.

Measurement systems are developed jointly between partners and used as a means of improvement. Measurement extends to the development and sharing of testing methods, equipment, and research techniques.

Vendor certification and rating systems are being used more as companies seek to develop a common language of quality improvement. The exact form of these systems is specific to each customer. Many formats, however, follow the general structure of the Malcom Baldrige or ISO 9000 criteria.

SUMMARY AND CONCLUSIONS

In the remainder of the 1990s and beyond, the packaging industry will be faced with an increasing challenge to manage within narrower time limits and to be even more focused on customers and customers' customers. At the same time, companies will be required to spend more time and effort developing the "people side" of the business at all levels.

Quality-management processes are an effective system for managing 21st Century organizations and maximizing total business performance in the age of intense competition and dramatic change.

The successful organizations will employ the following key success factors:

- Strong management commitment to leading and supporting a quality-improvement process.
- Aggressive customer focus that uses quantitative techniques for requirement identification.
- A planning system that involves broad participation and integrates quality objectives into strategic and operational planning.
- Immediate identification of critical work processes and major business success drivers.
- Effective, open communication system.
- Quality-process education for all employees, suppliers, and customers.
- Measurement systems that support continuous improvement.
- Collaborative relationships with customers and suppliers.
- Compensation system for all employees tied to quality improvement.
- Recognition of all who participate in the quality process.

BIBLIOGRAPHY

1. GAO/NSIAD-91-190, *U.S. Companies Improve Performance through Quality Efforts*, A. Medelowitz, 1991.
2. R. Buzzel and B. Gale, *The Pims Principles*, Macmillan, New York, 1987.

TRANSPORT PACKAGING

Alfred H. McKinlay
Consultant, Pattersonville,
New York

The objective of transport packaging is preservation of the product in its delivery from point of manufacture to the customer. Without packaging, most products would have a difficult and expensive trip through handling and transportation, many of them delivered to customers in a damaged condition. Transport packaging actually adds to the value of the product, by lowering the cost for customers to obtain possession of the product from its origination.

Transport packaging is a term used throughout the world—except in North American, where it is often known as *distribution or protective packaging*. It includes the shipping container, interior protective packaging, and any unitizing materials for shipping. It does not include packaging for consumer products such as the primary packaging of food, beverages, pharmaceuticals, and cosmetics. In the United States, transport packaging represents about one-third of the total purchases of packaging; the balance is attributable to primary packaging for consumer products.

The goal in transport packaging is to provide the correct design for packaging such that its contents will arrive safely at the destination, without using too much or too little packaging material. In other words, the package designer must ensure that this equation is maintained:

$$\text{Product} + \text{package} = \text{distribution environment}$$

The following text will show how to determine the right amount of each of the three variables so that the equation will always balance, with no excessive overpackaging cost or loss from damage.

FUNCTIONS AND GOALS OF TRANSPORT PACKAGING

The functions of transport packaging can be summarized as follows:

Containment. The basic purpose of packaging is to contain the product. Packaging permits products to move from their source to the customer, supplying use value to products that are otherwise useless to the customer, who is usually remote from the source.

Protection. Most products require some degree of protection from the hazards in distribution. Packaging furnishes the degree of protection needed to safely transport products from source to customer.

Performance. Packaging aids in transportation, handling, storing, selling, and use of the product. This function includes such things as orientation of the product, ease of identification, appropriate quantity, ease of disposal, and handling features.

Communication. The package must identify its contents and inform about package features and handling requirements. It generally provides space for shipping information as well.

To design a transport package, one must have goals in mind. These will vary with products, customers, distribution systems, manufacturing facilities, and so on, but most transport packaging should address the following objectives:

Product Protection. The primary purpose of any transport package is to ensure the integrity and safety of its contents through the entire distribution system.

Ease of Handling and Storage. All parts of the distribution system should be able to economically move and store the packaged product.

Shipping Effectiveness. Packaging and unitizing should enable the full utilization of carrier vehicles and must meet carrier rules and regulations.

Manufacturing Efficiency. The packing and unitizing of goods should utilize labor and facilities effectively.

Ease of Identification. Package contents and routing should be easy to see, along with any special handling requirements.

Customer Needs. The package must provide ease of opening, dispensing, and disposal, as well as meet any special handling or storage requirements the customer may have.

Environmental Responsibility. In addition to meeting regulatory requirements, the design of packaging and unitizing should minimize solid waste by any of the following: reduction–return–reuse–recycle.

Since transport packaging must always be economical, all the above goals should be balanced to achieve the lowest overall cost.

TAKING A TOTAL SYSTEM APPROACH TO PACKAGE DESIGN

The scope of design in transport packaging must consider all aspects of the distribution system, including customers, carriers, and distributors as well as the manufacturing plant, packaging line, warehousing, and shipping. Successful package design is a total-system approach.

Once created, a package does not magically form around the product, float through shipping, travel hundreds of miles in isolation, arrive at the customer's site, and then disappear. It has an influence on and is influenced by everyone and everything it encounters. Many of these encounters will affect either (a) manufacturing and distribution costs or (b) product integrity with indirect impact on sales. Therefore, such events should be considered in the design process.

Unfortunately, there is often too much focus on the cost of packaging materials to the exclusion of other factors, including cost-related ones in handling, storage, and transportation. If the package is slightly larger and/or heavier than it really has to be, costs in all three areas will be higher than necessary, perhaps producing an even greater effect on profits than would higher packaging costs for a smaller and/or lighter package. For instance, although each industry and company is different, a general rule of thumb states that transportation will cost between 3 and 10 times as much as packaging on average for all shipments. A small reduction in package size or weight could mean much more savings in transportation plus handling and storage. For example, a small kitchen appliance in bulky wraparound die-cut may involve less material cost, but molded packaging may pack faster and require less cube, permitting more pieces per unit load, fewer handling trips, more units per storage cube, and more units per truckload, for an overall savings.

An inverse relationship exists between packaging cost and maintaining product integrity with low damage rates, as shown in Figure 1. Other factors being equal, an increase in packaging will provide more protection to the contents and therefore lower the potential for damage. Or, conversely, cutting packaging costs without other improvements generally means less protection and higher damage rates.

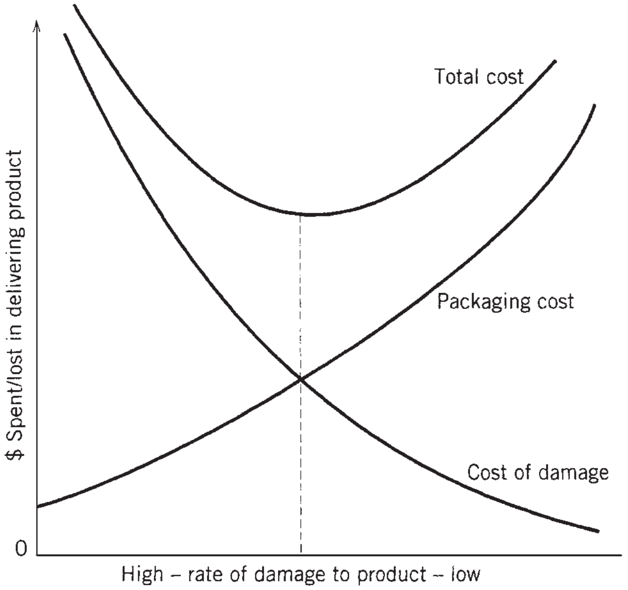

Figure 1. Cost of product protection is a tradeoff between packaging and damage.

The real cost of getting the product safely to market is the *sum* of packaging and damage. Optimizing the total is the true goal of packaging design. As damages rise too high on the left of the graph, both replacement–repair costs and potential for loss of customer goodwill and cancellation of orders increase. For companies where loss of sales and customer satisfaction are more important than costs, there is not much room for movement to the left of the package–damage intersection.

No matter where packaging design takes place—in engineering, in manufacturing, in shipping, or at the supplier—all factors mentioned above must be considered, costed, and involved in a *total-system approach*.

THE PROTECTIVE-PACKAGE CONCEPT

The equation presented earlier is used here to explain the concept of protective packaging for distribution:

$$\text{Product} + \text{package} = \text{distribution environment}$$

Figure 2 depicts this equation and the consequences of an imbalance in the equation, which is what happens when a product plus its package are not exactly what is needed to survive in the distribution process.

Reading from left to right, here is an explanation of the bar chart. *Severity* is the quantitative measure of the *environment*, which can be any one or combination of hazards in distribution. Here are examples of hazards and their severity: The rough-handling hazard to a 20-lb (9.1-kg) package is determined to be 30 in. (76-cm) of drop on any of six package surfaces; or the compression (storage) hazard is determined to be 10 packages high in warehousing; or the high-temperature hazard is 140°F.

Product represents the measured level of resistance to damage of the product. In the rough-handling example, the product has been tested and has shown the ability to survive six drops from 15 in. (38 cm) with no damage, while higher drops will cause product impairment.

The third bar depicts the equation whereby the *product's* measured level of damage resistance plus the *package's* measured abilities to protect the product are exactly equal to the expected environmental hazard(s), an optimum solution. For the example, a product with 15-in. (38-cm) drop resistance is packaged in 15-in. (38-cm) drop protection, which adds up to the 30 in. (76 cm) of drop height the packaged product is expected to encounter in the distribution environment.

When the package provides less protective capacity than needed for the environment, as shown in the shaded area of the fourth bar (Figure 2), this underpackaging will result in *damage in shipment*. For example, the package supplies only 9 in. (23 cm) of drop-height protection instead of the required 15 in. (38 cm).

The next bar defines *overpackaging*. The package protection level is higher than the environment requires, and the shaded area shows amount wasted. Instead of designing for 15 in. of drop protection in our example, packaging supplies 6 in. more than needed.

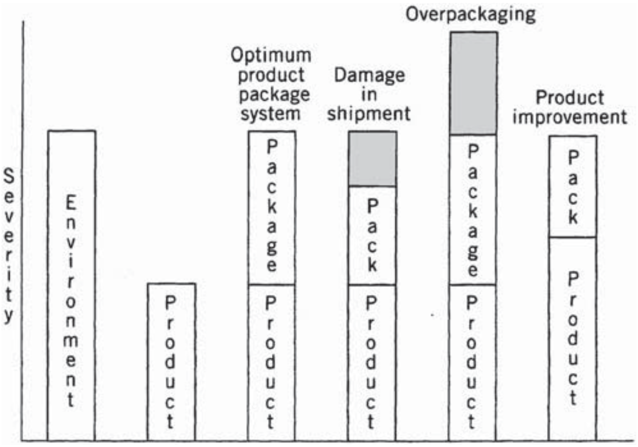

Figure 2. Concept of a protective package.

At times, *product improvement* is an alternative to more packaging. Instead of accepting a certain level of product ruggedness of a product, product engineers may be able to raise the level as shown in the bar chart to the far right. The result is a reduction in packaging needed. Perhaps the product had a component that malfunctioned above 15-in. (38-cm) drop heights, but a redesign improved ruggedness to the 20-in. (51-cm) level. Now packaging need only supply 10 in. (25 cm) of protection, a 33% reduction from the original.

The most elusive part of the equation is the distribution environment. The most difficult part of defining the environment is not in identification of the types of hazards, but what each hazard's expected level is and its probability of occurrence. Dedicated package designers continually search for better methods of defining the environment on the right side of the equation so they can solve for the parameters of product and package on the left side of the equation.

THE 10-STEP PROCESS OF TRANPORT PACKAGING DESIGN

Here is a proven 10-step procedure that will ensure that a transport package design will provide maximum performance at least overall cost.

1. *Identify the Physical Characteristics of the Product.* Product knowledge means more than knowing simply its dimensions and weight. The package designer must be aware of surface characteristics and susceptibility to abrasion or corrosion, the ability to hold a load in compression, internal characteristics affected by vibration, and particularly the product's fragility. Guessing about any of these factors will surely lead to potential problems.
2. *Determine Marketing and Distribution Requirements.* Package design must incorporate marketing and distribution requisites in addition to product characteristics. One must know the number of units that will ship in a container, the composition and attributes of the primary package, the identity of customers and their handling and storage requirements, the package disposal criteria, total volume expected per shift per day per year, expected life cycle, the planned modes of transport, types of distribution channels, and so on.
3. *Learn About the Environmental Hazards Your Products Encounter.* It was emphasized earlier that knowledge of the distribution environment is key to designing an optimum package. Major hazards to be expected in the environment are rough handling, in-transit vibration and shock, compression in storage or in transit, high humidity and water, temperature extremes, and puncturing forces. Learning about them may include observation, reading other's research, or conducting measurements.
4. *Consider Alternatives Available in Packaging and Unitizing.* Many alternatives are available for shipping containers, interior packaging, and unit loads. All should be considered and reviewed before selecting the final types for further development. Tradeoff analysis techniques such as make versus buy often help. Rather than considering only materials that one has experience with, comparing paper versus plastic versus wood vs metal is a good exercise at times to ensure the best for the particular project. Once the basic materials have been selected, detailed work on design can begin.
5. *Design the Shipping Unit (Container, Interior Packaging, and Unit Load).* With basic materials and information established in steps 1–4, the designer can now scientifically engineer a transport package, as well as unit load where appropriate. Each component of the shipping unit (container–interior–unit load) is analyzed for strength and other required properties and compared to technical data available from suppliers. Some packaging materials have good design data available, but most do not. The designer frequently must rely on experience to reach a successful solution; the novice may find that lack of information makes it difficult to arrive at an optimum solution. Trial and error can be shortened for the novice, as well as the experienced designer, by conducting engineering tests in package development. Impact, vibration, and compression testing in the lab not only identifies shortcomings but helps to fine-tune to the optimum solution.
6. *Determine Quality of Protection Through Performance Testing.* After the shipping unit is designed, perhaps with the aid of engineering development tests, it should then be performance-tested. This consists of subjecting the unit to a sequence of anticipated hazards and/or tests in the laboratory for the purpose of a pass/fail decision. Will the shipping unit protect its contents all the way through distribution? The performance test methods should be based on industry standards. Such standards have considerable experience and history behind their development and use, and a successful completion of the test sequence almost

guarantees damage-free shipments. The most widely used standard is the International Safe Transit Association's Project 1 and 1A, in use since 1948 (1). The 1982 approved ASTM D4169 (2) provides a more complete array of distribution possibilities and identified hazards with corresponding test sequences, and it permits the user some flexibility in selecting test intensities. For users who can clearly define their distribution cycles, but find them different from the standard cycles in D4169, the ASTM standard also provides a means of developing a unique sequence of tests, resulting in performance tests that can more precisely simulate the actual conditions.

7. *Redesign the Shipping Unit Until It Successfully Passes All Tests.* There is an old saying: One test is worth 1000 expert opinions. Often performance test results fool even the most experienced engineers, and it is necessary to repeat an entire cycle of redesign and retesting as many times as required to reach a "pass" decision.
8. *Redesign the Product Where Indicated and Feasible.* Occasionally, testing reveals a product weakness that can be compensated for by protective packaging, but at excessive cost. If at all feasible, the product should be redesigned to correct the weakness rather than redesigning the package. This is particularly important when the cost of the redesigned product is less than that of the increased packaging. It is usually difficult for package designers to bring about product redesign when they are located organizationally in other than the product engineering group. If this is the case, the packaging designer should attempt to establish a continuing line of communication with the product engineers. Sometimes this means educating product engineers in the hazards of distribution and showing them how to correct product weaknesses.
9. *Develop the Methods of Packing.* An important part of package design is packing of the product in the shipping container and unitizing of containers. Although this may be the responsibility of someone else, (i.e., industrial engineering), the designer must be aware of cost factors and the appropriateness of mechanizing or automating all or part of the operations. Sometimes a tradeoff in package design must be implemented to achieve overall system economics.
10. *Document All Work.* One step repeatedly overlooked in the design process is documentation. This includes documenting test results, specifications, drawings, and methods of packing. Drawings should be in company-standard formats with appropriate designations for reference in the corporate specification system. Relying on supplier sketches or drawings as the reference document is not a wise idea. They should be transferred to company format so that purchasing, manufacturing, and engineering can reference them. On any package design project, follow these 10 steps and check your work against the checklist below. Doing so will significantly reduce potential of an unpleasant surprise when shipments begin.

Checklist for Each Package Design Project

1. Have you considered the solid-waste aspects of the package and unit load, and their alternatives, to minimize impact on the environment?
2. Have you pondered the use of returnable or reusable containers and dunnage?
3. Have you contemplated all cost factors in the distribution cycle: handling, storage, and transportation?
4. Have you checked cost of this package versus company or plant average for similar products?
5. Have you considered all possible alternatives in materials and methods?
6. Have you used industry standards for materials and design criteria where possible?
7. Have you performance-tested the design against accepted industry standards or regulatory requirements?
8. Have you documented the design in company's spec system?
9. Have you checked damage and customer complaints on this product line?
10. Have you satisfied all rules and regulations applying to this product for all distribution modes it is expected to encounter?

THE COMPONENTS OF TRANSPORT PACKAGING

The components of transport packaging may be broadly classified in the following categories:

Shipping containers
Interior protective packaging
Closure and securement materials
Unitized load shipping bases

Together these represent about one-third of the total U.S. packaging costs.

By far the largest component of transport packaging is shipping containers, representing an estimated 75% of the total purchased. Corrugated boxes represent about 80% of the total spent on shipping containers and probably close to 90% of total units of shipping containers used. Other types of containers include: paper and plastic shipping sacks; wooden boxes and crates; metal and plastic returnables, drums and pails; and composites for textiles.

Interior packaging takes many forms, but the most widely used for cushioning, positioning, or simply to fill space are corrugated pads, die-cuts, partitions, foldups, molded and fabricated expanded polystyrene forms, molded and fabricated resilient foams, foam-in-place, loose-fill, air-bubble and foam wraps, variations of paper waddings, inflatable air bags, and a variety of specialty devices and forms. Barriers against water, water vapor, and various gases and to prevent electrostatic damage are another class of interior materials. Corrosion preventatives are also in this category, such as preservatives, volatile corrosion inhibitors, and desiccants.

Closure and securement includes (a) adhesives, tape, and staples for corrugated box closure and (b) strapping, stretch wrapping, and shrink bags for unitizing purposes.

Shipping bases include wood, corrugated, or plastic pallets; corrugated, solid fiber, or plastic slip sheets; and wood skids.

CONCLUSION

When products are shipped anywhere and by any mode of transport, the packaging surrounding the product must contain and protect it. Ensuring that the product arrives at destination in undamaged condition is the primary objective of transport packaging.

BIBLIOGRAPHY

1. *Pre-shipment Test Procedures*. International Safe Transit Association, East Lansing, MI, 2007.
2. *Annual Book of ASTM Standards*, Vol. 15.10, D4169, ASTM International, West Conshohocken, PA, 2007.

TRANSPORTATION CODES

Mary Alice Opfer
Fibre Box Association, Rolling
Meadows, Illinois

Two types of transportation codes are in use in the United States with regard to packaging: federal regulations and carrier rules. Carrier rules, such as Item 222 and Rule 41, are the type that is more familiar to the packaging community. They have been in effect the longest and have changed the least over the past several years.

CARRIER RULES

Carrier packaging rules are found in the carriers' tariffs and must be followed if the shipper wants coverage by the carrier for damage claims. Carriers reserve the right to refuse articles they consider inadequately packaged, and conformance to packaging rules is implicit in collection of shipping rates as listed in the tariffs. The Airline Tariff Publishing Company (air cargo) and Air Transport Association of America (airline) publish North American tariffs, but these documents do not include detailed packaging instructions except for special articles, such as live animals, human remains, and seafood. Individual carriers, United Parcel Service, Federal Express, and the U.S. Postal Service, publish their own tariffs, which also typically lack detailed packaging instructions.

The American Trucking Association and the National Railroad Freight Committee publish the National Motor Freight Classification (NMFC) and the Uniform Freight Classification (UFC), respectively. These documents contain detailed packaging rules as well as rates, which apply to the participating individual carriers named in the tariffs. The packaging rules mandate minimum quality values for material of construction based on the total gross weight and united dimensions (length+width+depth) of the package and its contents.

Item 222. Item 222 is the rule for corrugated and solidfiber packaging of articles transported in the less-than-truckload (LTL) common-carrier mode. Most goods transported in the United States today are transported by this mode at some time in their distribution cycle. If the NMFC specifies "in boxes" in the entry for the article to be transported, then the outside of the box must carry a circular box manufacturers certificate that precisely coincides with the instructions in the rule and certifies compliance with the manufacturing instructions in the rule, or damage claims and rates may not be honored. If the entry for the article specifies "in package number…," then detailed instructions for that (those) numbered package(s) are listed in the section "Specifications for Numbered Packages," which must be followed, and a rectangular certificate is applied indicating the package number and grade of board used. The numbered package certificate is the only rectangular certificate that is recognized by carriers for tariff compliance. All others are simply advertisements.

Rule 41. Rule 41 is the corrugated and solid-fiber packaging rule for articles shipped by rail. However, piggyback shipments in trucks on railroad flatcars are subject to truck rules. Rule 41 and Item 222 are very similar, but not identical. The numbered packages can be different. Rule 41 is the older of the two and is the model on which Item 222 is based, but articles in boxes are shipped most often by truck making Item 222 the rule to be consulted.

Edge-Crush Test (ECT). In 1990, the corrugated industry trade associations sponsored proposals to revise Item 222 and Rule 41. The primary thrust of the proposals was to have the rules recognize edge crush test criteria as an indicator of box-compression strength, and to allow its use as an option to the traditional linerboard basis weight and combined board-burst requirements. ECT is a characteristic of the combined corrugated board that directly predicts compression strength of the corrugated packaging. By providing alternative requirements in the carrier rules, box manufacturers would have more latitude to design and supply boxes that better meet the customer's performance requirements. This concept is supported by organizations representing carriers, users, as well as box and containerboard producers with the growing recognition that box compression strength may be a more important factor as unitized carrier loading and warehousing has proliferated. Enhanced containerboard materials achieving a guaranteed crush or compression performance at lower basis weights had become available, which provide potential environmental advantages and improved quality through source-reduced packaging systems and increased recycled content.

Use as Standards. Over a long period, the terminology and minimum requirements for corrugated packaging used in the carrier rules became an assumed standard for boxes. Using the carrier rules as standards is often inappropriate, as the carrier rules were not developed to address the box users' warehousing and other distribution needs. They were developed to delineate the carrier's liability. As the box-manufacturing industry and its customers emphasize quality and efficiency, corrugated-box standards should evolve to support the new emphasis.

FEDERAL REGULATIONS

Packaging itself is not typically of federal interest; however, certain specific issues are regulated by U.S. government agencies. Consequently, packaging is sometimes regulated by those agencies. Federal regulations that affect packaging are found in the *Code of Federal Regulations* (*CFR*) of the agency under whose jurisdiction the issue resides. For example, the U.S. Department of Transportation (DOT) regulates the transportation of hazardous materials. Regulations for packaging hazardous materials for transport are in the DOT's *CFR*, Title 49. Packaging of these materials is based on the capability of the packaging to pass a battery of tests that are dictated by the degree of hazard of the material, or its "packing group." These regulations were adopted by the DOT from the United Nations (UN) Recommended Rules, which replaced the former DOT specification packages such as the DOT 12B.

The DOT shares the regulation of packaging infectious substances and regulated medical wastes with the Department of Labor (29CFR) due to OSHA concerns over bloodborne pathogens, and of packaging hazardous wastes and pesticides with the Environmental Protection Agency (EPA) (40 *CFR*) because of potential environmental impact. The Food and Drug Administration (FDA, 21 *CFR*) regulates direct contact packaging of fatty and aqueous foods as indirect food additives. The Department of Agriculture (9 *CFR*) regulates the packaging of meats and poultry under meat inspection and poultry inspection.

Labeling. The EPA assisted the Federal Trade Commission (FTC 16 *CFR*) in defining the voluntary ecolabel statements that are allowed, such as recycled, recyclable, and biodegradable. Aside from environmental claims, package labeling issued are generally specific to the article inside the package. With transport packaging often doubling as consumer packaging, this process has become an important concern. The FDA regulates the nutritional labeling of packages with respect to food contents. Both the FDA and FTC require metric as well as standard measurement units displayed on the packages of many consumer products. The DOT gives specific instructions for labeling hazardous-materials packages, even specifying the colors to be used. The EPA requires products (including packages) that are manufactured using or containing ozone-depleting substances to be specifically labeled. Package labeling of regulated articles should be a joint effort between package manufacturer and user.

BIBLIOGRAPHY

General References

Airline Tariff Publishing Company, Fairfax, VA.

Air Transport Association of America, Annapolis Junction, MD.

National Motor Freight Classification, American Trucking Associations, Alexandria, VA.

Uniform Freight Classification, National Railroad Freight Committee, Atlanta, GA.

Code of Federal Regulations, Superintendent of Documents/U.S. Government Printing Office, Washington, DC.

Fibre Box Handbook, Fibre Box Association, Rolling Meadows, IL.

TRAYS, FOAM

Huston Keith
Keymark Associates,
Marietta, Georgia

These lightweight, inexpensive trays are made of expanded polystyrene. The major packaging applications are for packaging fresh meat, poultry, eggs, produce, and other foods for retail sale or for packaging prepared foods for imminent consumption. Other uses include industrial protective packaging and disposable tableware (plates, bowls, cups, trays, etc.). The primary process used for making trays is extrusion of foamed polystyrene sheet (Figure 1) and thermoforming the trays. A minor quantity of trays are made from steam molding of precharged beads—this process is used mostly for cups, industrial packaging, and insulation. This article focuses on the thermoformed trays as being of primary interest to packaging, but it discusses the other applications briefly in context of packaging use.

HISTORY

The process of making a polystyrene foam sheet for thermoforming was developed in the late 1950s based on technology first commercialized by Dow Chemical Company in 1943 for extruding foam board for insulation. It was called the "direct-injection process," because gas was injected into the extruder and mixed with melted polymer, as compared with the precharged bead process, where resin beads are impregnated by the gas. Dow then started a plant in Carteret, New Jersey to produce sheet and

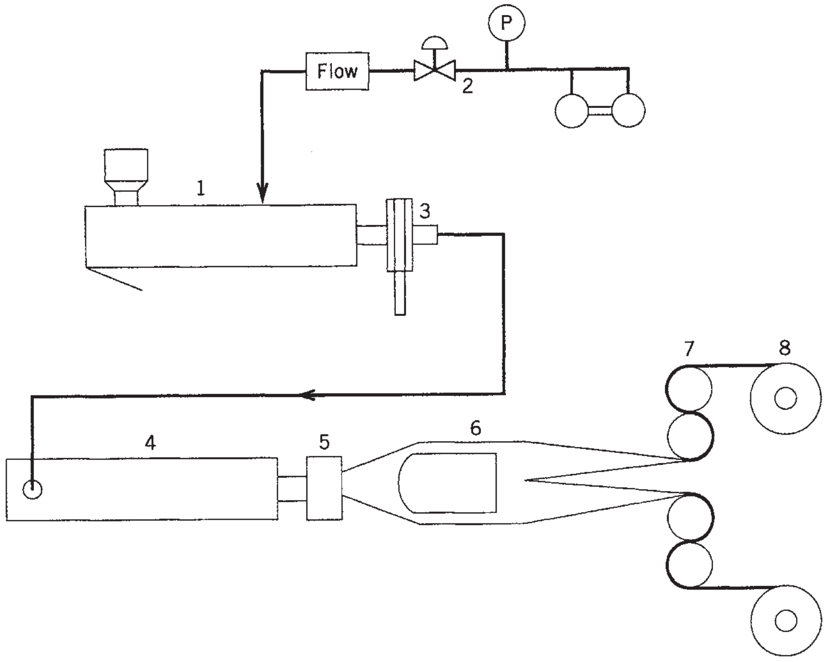

Figure 1. A tandem extrusion process for the manufacture of polystyrene foam sheet: 1: primary extruder, 2: blowing-agent addition system, 3: screen changer, 4: secondary extruder, 5: annular die, 6: cooling mandrel, 7: S-wrap, 8: winders.

trays. Because of Dow's prominence in commercializing these processes and continued dominance of the polystyrene resin market, its trade name Styrofoam for foam insulation board became associated with nearly any form of expanded polystyrene. In fact, many people improperly use the trade name Styrofoam for all polystyrene foam products.

The initial application for this process for packaging was for forming meat trays. By the mid-1960s, equipment and techniques were developed for forming egg cartons. Dow formed a joint venture with a major egg producer, Olson Farms, to produce egg cartons. The venture, Dolco Packaging, later became an independent company. In the late 1960s, food-service containers and packaging were developed. Foam trays began to replace pulp trays for meat and egg packaging at an accelerated rate because of lower cost and better durability. In addition, the growth of the supermarket and especially the food-service industry propelled rapid increases in the use of this package.

The rapid growth of extruded-polystyrene foam packaging continued as more users were found. Foam disposable plates and bowls found acceptance, as did carry-out containers in an affluent society driven more and more by convenience. The fast growth of polystyrene attracted petrochemical giants Amoco and Mobil into the business. In 1973, polystyrene foam containers were adopted by McDonald's as its primary hamburger package. Better heat retention, enhanced produce protection, and concerns for forest depletion and landfill stability were cited as benefits. This led to over two decades of unprecedented industry growth, from 15 million lb (6800 metric tons) in 1966 to 651 million lb in 1988 (295,900 metric tons) in the United States alone. Costs were driven lower by more efficient production, which made the replacement of substitutes (mostly paper) more and more compelling.

Under pressure from environmental groups, led by the Environmental Defense Fund (EDF), McDonald's first placed a moratorium on chlorofluorocarbon (CFC) use in its containers, then announced in November 1989 that it would discontinue the use of polystyrene foam trays for hamburger packaging; they would be replaced with a paper-based wrap. Other fast-food suppliers followed suit. This caused a loss of 90 million lb of demand in the face of industry overcapacity. One supplier entered Chapter 11 bankruptcy (since recovered), and at least two plants were closed.

After a period of retrenchment, the industry began to slowly recover. Although the fast-food packaging market is moribund, the low cost and stiffness of foam relative to alternatives has provided continued growth in disposable tableware. The growth of the poultry market has also pulled along foam tray consumption. Whereas the foam tray may never visualize the usage in fast food as before, it has proved to be an almost irreplaceable packaging container for fresh meat and poultry.

MANUFACTURING PROCESS

As mentioned earlier, most foam trays are made by extruding foam sheet and thermoforming it into trays. Although this process is similar to the process used to make solid plastic trays, it also differs in several significant aspects. Two extruders are used instead of just one, an annular die is used rather than a flat one, rolls must be aged before forming, and matched metal dies are used for forming. As a result, the capital costs are much higher than for solid plastic. However, raw-material costs are much lower as a percentage.

The typical tandem extrusion system includes a primary extruder for melting and mixing the polymer and a secondary extruder connected in series for allowing the extrudate to cool and expand. Whereas a single extruder may be used, large commercial operations use tandem systems for a better quality sheet. The blowing agent is injected into the primary extruder. The melt then passes into the secondary extruder, which is usually one third larger in diameter (78% larger in volume), primarily for cooling. The extrudate then exits through an annular die, expands, and flows over a mandrel. The resulting tube is slit to make a flat sheet. Sometimes it is slit twice to form two sheets. The diameter of the mandrel determines the sheet width and provides biaxial orientation. The sheet is then pulled through a series of two to three rollers (S-wraps) to remove the curl, make the thickness uniform, and cool it for winding.

A typical commercial extrusion setup is 4.5 in. (115 mm in nominal size) in diameter for the primary extruder and 6.0 in. (150 mm) for the secondary extruder for 500–1000 lb (275–450 kg) per hour. A common configuration for output of 800–1500 lb (350–700 kg) involves a 6.0 in. (150-mm) primary and 8.0 in. (200-mm) secondary. The resulting foam has fine, closed cells with a density of 2–10 lb/ft^3 (32–160 g/L). For packaging applications, the resulting sheet typically has a basis weight of 3–25 g/100 in.^{2} (50–400 g/m^2 with a thickness of 30–200 mils (0.75–5.00 mm). The width typically ranges from 20 to 52 in. (500 to 1325 mm).

A variety of blowing agents may be used. Most producers used chlorofluorocarbons until 1988 (see below). Others used butane, pentane, or other hydrocarbon gases. Although hydrocarbons are much less expensive, they are highly flammable. Extreme precautions had to be taken to prevent fires and explosions. As noted below in the “Environmental Issues” section, all these gases are being reduced or eliminated for environmental concerns. A leading replacement candidate is carbon dioxide (CO_2). Dow has developed technology for using 100% CO_2 that it is licensing. Other gases are being investigated.

During the extrusion process, special finishes and laminates may be applied for graphics, gloss, thickness reduction without loss in strength, gas barrier, or other purposes. As the foam exits the extruder, it may be hit with a stream of air from completely around the tube. Called an *air-ring coating*, the foam cells near the surface are collapsed, which a forms thin glossy skin on one side of the sheet. Some producers have also developed a technique of coextruding a thin (<1 mil or 25 μm) layer of polymer (usually polystyrene) through the same annular die that produces the foam. At the S-wraps, a premade and sometimes preprinted film (oriented polystyrene or barrier) may be laminated in the nip. One producer accomplishes the same feat by extruding a thin-impact polystyrene film onto the foam sheet in the nip.

After the foam has been extruded and wound onto rolls 60–84 in. (1.5–2.1 m) in diameter, it is placed in a storage area for 1–3 days to allow the blowing agent to partially escape, for optimal expansion in thermoforming. After aging, the foam is taken and placed on an unwind stand for thermoforming.

Thermoforming a foam sheet into trays is somewhat more complex than forming a plastic sheet. Because foam is an insulator, heating the sheet to forming temperatures requires more time. Distribution of heat is also critical. During the heating process, the foam reexpands to nearly twice its stating thickness. The expansion needs to be as uniform as possible to produce a good part. Thus on production machines, ovens are much longer than typical thermoformers. When the sheet enters the mold platen, the male and female molds close to a thickness slightly less than the starting sheet thickness. This technique provides uniform wall thickness throughout the part. This helps provide the same strength as a much heavier comparable plastic part. Although foam trays can be trimmed in place, most large commercial equipment uses a separate trim station. Punch-and-die trimming is normally used for large commercial operations for higher speed and more durability, although steel-rule dies may be used for lower volume situations.

After molded parts are trimmed, the remaining sheet “skeleton” is ground up immediately to be stored in a silo for reuse. Because the unused scrap sheet is as much as 50% of sheet area, reusing scrap is critical to producing parts economically. While the ground-up foam or “fluff” may be reused directly, it is difficult to blend and feed properly with virgin resin pellets. Thus, most producers have a reclaim operation that remelts the fluff and extrudes it as pellets.

Key builders for foam-extrusion equipment are Battenfeld Gloucester (Gloucester, MA) and Berstorff of Germany. Davis Standard (Pawtucket, RI) and Egan (Somerville, NJ) also produce foam lines. Most foam thermoformers are built by Irwin (Yakima, WA) and Brown (Beaverton, MI). The typical resin used is a high-heat grade of crystal polystyrene. Dow Chemical (Midland, MI) is the largest supplier worldwide. Others include BASF (Frankfurt, Germany), Huntsman (Salt Lake City, UT), and Chevron (Houston, TX).

The cost of an extruded-polystyrene foam tray plant is more than double the cost of a thermoformed solid-plastic tray plant for comparable output in trays. A typical setup of an extrusion line, reclaim line, silos, two thermoformers, and tooling as of 1994 would cost about \$3–\$5 million. In addition, a foam plant requires more land and building for equipment, roll storage, and finished-goods storage. As a tradeoff, however, raw materials are a much lower proportion of manufacturing costs (30–50% vs 50–80%).

KEY PRODUCERS

The major producer of foam trays by far is Tenneco Packaging (Evanston, IL) with five plants around the country, which purchased Mobil Chemical Company’s foam business in October 1995. Amoco Foam Products Company (Atlanta, GA), with nine plants, is the next largest and is expected to be sold before this article is published. Both of these companies offer a broad line of both disposables and packaging products. Four other manufacturers have also recently changed ownership. Tekni-Plex (Somerville, NJ) was bought in 1994 by MST, a financial group, which then also purchased Dolco Packaging (Studio City, CA) in February 1996. Sweetheart Cup

(Owings Mills, MD), primarily a disposable manufacturer, was acquired in 1993 by American Industrial Partners Capital Fund (San Francisco) from Morgan Stanley (New York). Elm Packaging, (Memphis, TN) management-led financial group acquired Fripp Fibre's operations in 1994. Other foam producers Genpak (Glens Falls, NY), Linpac (Wilson, NC), Solo Cup (Highland Park, IL), Dart Container (Mason, MI), and W. R. Grace (Reading, PA) have not changed ownership since 1993. All producers except Amoco and Tenneco specialize in one or two market segments and often compete within a limited geographic area.

Because foam is lightweight and parts are generally three or more times thicker than parts made from competing materials, storage and transportation costs represent a much higher proportion of costs. Shipping products within one day's drive (400–500 m or 600–800 km) from the manufacturing facility can hold transportation costs under 5% of the selling cost. Some makers have been able to offset this somewhat by the use of laminates. In some applications, such as fast-food or carryout packaging, where retail storage is minimal, the value of this thickness reduction more than compensates for its increased cost. For the most part, however, foam producers have found it generally more cost effective to locate near key markets. This easily offsets economies of scale from larger production facilities. Only in the case of specialized products can manufacturers ship products farther than a day's drive.

PRODUCTS, USES, AND APPLICATIONS

The primary packaging applications for foam trays are fresh meat, poultry, and eggs. There is also considerable usage for packaging carryout foods in restaurants, although that market segment has dropped considerably since McDonald's discontinued using clamshells for hamburgers. McDonald's still uses large quantities for packaging breakfasts. There are minor quanitites used for a variety of industrial packaging applications, primarily as cushioning. Because disposable tableware is used for immediate food consumption and is not meant to protect food for transit to another location, it will not be discussed here.

The major application is for packaging fresh meat, with about 8 billion trays. These trays are sold to supermarkets and grocery stores, which cut and package meat in the back room to display in self-service cases. Because a red, watery fluid called "purge" oozes out of the meat, an absorbent pad is placed in the tray just prior to placement of the meat. The entire package is wrapped with a clear film, usually poly(vinyl chloride) (PVC). Wrapping is now done on manual or semiautomatic equipment. The package is placed on display in a self-service case for a maximum of 2–5 days depending on the freshness life of the meat cut.

The industry has developed fairly standard sizes and colors, although there is some variation by producer. Most supermarket foam trays are white, although there is growing interest in other colors. Rose has been used for pork more frequently, blue for fish or seafood, green for produce, and yellow for poultry. Within the past 5 years, the use of black has grown dramatically, especially for upscale or niche products such as natural beef, low-fat meats, or marinates. Even though nearly any shape or size is possible, most of the industry has standardized on a set of shallow, square trays, partly for merchandising and partly for cost savings (see Table 1). Most meat and seafood trays are about $\frac{1}{2}$ in. (13 mm) deep, which allows most cuts to be observed from three sides. Poultry trays are typically ≥ 1 in. deep (25 mm), because of greater purge and typical practice of packing more product in each tray. Product trays are often as much as 3 in. (75 mm) deep because of the greater height of the product.

In the mid-1960s, many supermarkets began to discontinue cutting chicken for sanitation and cost reasons in favor of purchasing it already cut and packed in foam trays. Holly Farms (now Tyson) led the industry with its "deep chill" technique of crust-freezing the chicken with a quick blast at -40°F (-40°C), usually after packing it in the tray. This technique gave chicken up to 18 days' shelf life for travel to the retail store and sale. The poultry industry also began using high-speed wrapping machines to gain efficiency. The deep-chilling, longer life, and high-speed wrappers were too demanding for lightweight supermarket trays, so Amoco, Grace, and Tekniplex developed heavier gauge trays (150–200 mils or 3–5 mm) to address this market. Increasing demands from wrapping machines have led to not only increased tray weights but also design changes such as gussets and bowed sidewalls. The processor segment now accounts for about 3 billion trays and has grown much faster than the total market as a result of increasing poultry consumption.

Because of environmental pressures and easy substitution, pulp has regained considerable market share in the 3-billion-unit egg-carton market, where the wet strength of foam is less of an advantage. The primary size are for one dozen large eggs, although half-dozen and 18-count packages are available. Colors are primarily white or yellow. Most packages are printed off-line with the packer's name. Dolco is the major producer in this market.

Although produce uses almost 2 billion trays, less than a quarter are foam, with the remainder being pulp, oriented polystyrene, and injection molded. Trays are sold to both supermarkets and packers for packing tomatoes, mushrooms, corn, and a variety of other items. A small number goes to various berry packers. Cut fruits and vegetables are sometimes packed in supermarket trays. Because of consumer preferences for bulk produce, industry fragmentation, environmental pressures, and questionable need for rigid packages for many items, foam trays have made little progress gaining usage in produce. Seafood is similarly fragmented. Tray usage is confined largely to frozen items, with fresh products sold over the counter wrapped in paper. Miscellaneous other foods such as pasta, deli meats and cheeses, and prepared foods are also wrapped foam trays using typical processor or supermarket sizes.

A new development in foam trays is the *barrier-foam trays* (see the Trays, barrier-foam article). This product is a composite of a barrier film laminated to foam sheet then formed into trays. This tray can be evacuated and/or gas

Table 1. Common Meat and Poultry Tray Sizes

	in.					mm				
Tray	Width	×	Length	×	Height	Width	×	Length	×	Height
Supermarket										
1	$5\frac{1}{4}$	×	$5\frac{1}{4}$	×	1	133	×	133	×	25
1S	$5\frac{1}{4}$	×	$5\frac{1}{4}$	×	$\frac{1}{2}$	133	×	133	×	13
2	$5\frac{3}{4}$	×	8	×	1	146	×	203	×	25
2S	$5\frac{3}{4}$	×	8	×	$\frac{1}{2}$	146	×	203	×	13
4	$7\frac{1}{8}$	×	$9\frac{1}{4}$	×	1	181	×	235	×	25
4S	$7\frac{1}{8}$	×	$9\frac{1}{4}$	×	$\frac{1}{2}$	181	×	235	×	13
7S	$5\frac{3}{4}$	×	$14\frac{3}{4}$	×	$\frac{1}{2}$	146	×	375	×	13
8S	$8\frac{1}{4}$	×	10	×	$\frac{1}{2}$	210	×	254	×	13
10S	$5\frac{1}{2}$	×	$10\frac{3}{4}$	×	$\frac{1}{2}$	140	×	273	×	13
12S	$9\frac{1}{4}$	×	$11\frac{1}{4}$	×	$\frac{1}{2}$	235	×	286	×	13
16S	7	×	12	×	$\frac{1}{2}$	178	×	305	×	13
17S	$4\frac{3}{4}$	×	8	×	$\frac{1}{2}$	121	×	203	×	13
20S	$6\frac{1}{2}$	×	9	×	$\frac{1}{2}$	165	×	229	×	13
23S	8	×	18	×	1	203	×	457	×	25
24S	8	×	16	×	1	203	×	406	×	25
25S	8	×	$14\frac{3}{4}$	×	1	203	×	375	×	25
1014	10	×	$13\frac{3}{4}$	×	1	254	×	349	×	25
1216	12	×	16	×	1	305	×	406	×	25
Processor										
2P	$5\frac{3}{4}$	×	8	×	$1\frac{1}{8}$	146	×	203	×	29
3P	$6\frac{5}{8}$	×	$8\frac{5}{8}$	×	$1\frac{1}{4}$	167	×	219	×	32
4P	$7\frac{1}{8}$	×	$9\frac{1}{4}$	×	$1\frac{1}{4}$	181	×	235	×	32
8P	$8\frac{1}{4}$	×	10	×	$1\frac{1}{4}$	210	×	254	×	32
10P	$5\frac{1}{2}$	×	$10\frac{3}{4}$	×	$1\frac{1}{4}$	140	×	273	×	32
11	$7\frac{5}{8}$	×	$11\frac{5}{8}$	×	$1\frac{1}{4}$	194	×	295	×	32
24P	8	×	$15\frac{5}{8}$	×	$1\frac{3}{8}$	203	×	397	×	35
25P	8	×	$14\frac{3}{4}$	×	$1\frac{1}{3}$	203	×	375	×	33

Source: Amoco Foam Products Company. Sizes and designations may differ somewhat by producer and location.

flushed and sealed with a barrier-film lid to make an extended-shelf-life modified-atmosphere package. It is used for precooked chicken, fresh turkey, and fresh sausage in the United States. Beef and prok are also packed in them, mostly in the United Kingdom.

Other Packaging. Hinged-lid or clamshells for carryout packaging address a market of 4–5 billion trays. These trays are only designed to hold food for 1–2 h, or long enough to protect it from the kitchen to the point of consumption. They are popular for this application because of low cost, wet strength, and ability to hold food hot or cold for up to 30 min.However, they are not leakproof, and the tab holding the lid closed does not stand up well to transport abuse. The primary users are fast-food chains, restaurants, and institutional feeders. These customers also use large quantities of foam trays, plates, and bowls.

Protective packaging has been a minor market for foam trays. Volumes per part are much lower; thus, mold costs become a significant expense. In addition, thermoforming generally cannot do the vertical sidewalls and intricate details required to hold a product in plate for transit. For these reasons, bead molding of expandable polystyrene beads has been the preferred material for these applications.

ENVIRONMENTAL ISSUES

Polystyrene foam containers came under aggressive attack by environmental groups in the late 1980s and early 1990s. They were fingered for a variety of enviornmental ills, from creating holes in the ozone to filling landfills to over capacity to litter problems to choking water animals. Although the industry began a vigorous lobbying and public relations campaign to show that these notions were greatly exaggerated or erroneous, much damage could not be prevented. Several local governments, notably Suffolk County, New York on Long Island; Berkeley, California; and Portland, Oregon, placed outright bans on the product's use. Even though Suffolk's law was later rescinded, others are still in place. Other locales such as Minneapolis and the State of California have passed sweeping recycling mandates that foam and other plastic containers will have difficulty meeting.

Most producers used a blowing agent called CFC, which is also known by the DuPont trade name Freon 12. In 1987, the Montreal protocol established a timetable for halving CFC use by 1999, because these compounds react with ozone in the upper atmosphere, which reduces the filtering of ultra violet rays provided by the ozone layer. Then, McDonald's placed a moratorium on using packages with CFCs in 1988, forcing users to seek alternatives. Although foam was actually a very small consumer of CFCs relative to air conditioning, refrigeration, and electronics manufacturing, its visibility with McDonald's caused it to receive an inordinate share of the blame for ozone depletion. Many foam producers switched to a hydrochlorofluorocarbon (HCFC), which had less than 5% of the ozone-depletion potential of a CFC but at a much higher cost. But in 1990, the Montreal protocol was updated to eliminate all CFCs. Now, most producers have been forced to switch to hydrocarbon blowing agents, although Dow's CO_2 process is used by a few.

One main issue with foam trays is its supposed contribution to the solid-waste problem. Whereas the industry convincingly proved that polystyrene foam accounted for less than 0.5% of landfill weight, again visibility caused it to be a target. The package was also faulted for lack of biodegradability, although it was clearly shown that nothing degrades in a landfill. The industry, particularly Amoco, Mobil, and Dart, countered this with lobbying, public-relations efforts, and developing three recycling plants, which now operated by the National Polystyrene Recycling Company, a joint venture. McDonald's even participated briefly in a recycling program, prior to its decision to discontinue using foam.

Even though the industry gradually recovered from the CFC and solid-waste issues, it slowly began to face a new one. The hydrocarbon blowing agents are volatile organic compounds (VOCs), which most states are restricting to protect air quality. In many states, it is virtually impossible to expand, others require an environmental impact study before issuing a permit, and California is demanding outright reductions. Thus, most producers are vigorously pursuing new blowing-agent technologies that will allow for expansion.

BIBLIOGRAPHY

General References

I. E. Cavallo, Amoco Foam Products Company (retired), interview, Feb. 1995.

R. Ramirez, Dolco Packaging Corporation, interview, Feb. 1995.

R. E. Skochdopole and G. C. Welsh "Polystyrene Foams" in *Styrene Polymers*, E. R. Moore, ed., Dow Chemical Company, Midland, MI, 1989, pp. 193–205. Reprinted from the *Encyclopedia of Polymer Science and Engineering*, Vol. 16, Wiley, New York, 1989, pp. 1–246.

P. A. Wagner, "Foam, Extruded Polystyrene" in M. Bakker, ed., *Encyclopedia of Packaging Technology*, Wiley, New York, 1986, pp. 345–346.

For more information, contact the companies mentioned in the article.

TUBE FILLING

Thomas Miller
T. J. Boedekker
IWKA,
Fairfield, New Jersey

Industrial production of collapsible tubes in two processes that include the following:

1. The manufacture of an empty tube.
2. Filling and closing of the tube.

Most tube-filling and tube-closing machines can handle different tube shapes, materials, and a large variety of filling products by means of versatile accessories. Different tube shapes such as round, oval, conical, and cylindrical can be handled with the use of size parts. Cylindrical tubes range within 10–52 mm in diameter and 50–250 mm in skirt length. Tubes are made from metal (aluminum, lead, tin) or laminates (foil laminates, plastic laminates). Filling materials range from thin products (shampoo), or cremes (toothpaste, ointment), to extremely viscous materials such as caulking compounds.

Depending on the different materials, production speeds range from within 30–200 tubes per minute. A speed of $\leq 120\,\text{min}^{-1}$ single-lane machines are used, where as two-lane machines are common for higher speeds. All tube fillers are using an intermittent production process in which tubes, positioned in tube holders or pucks, are indexed at consistent speed and spacing through the workstations.

TUBE FUNCTIONS

The working process of a tube-filling/closing machine can be divided into four main functions.

Tube Handling. For lower speed, tubes are fed manually by infeed conveyors or chutes into the machine. Medium-speed machines are typically fed by cassettes or magazines. High-speed machines are normally equipped with their own tube loader that picks up tubes row by row from the case and feeds them on to conveyors to the first workstation (Figure 1). The tube is put into vertical position and pushed into the tube holder. For safe operation, the tube should not be dropped by gravity. The preferred method is tipping of the tube by suction blocks into the tube holders and vacuum cups for tube discharge. A rotary turret, driven by a Ferguson-type indexing gear, which runs in an oil bath ensures precise positioning of the tube through the workstations. This method guarantees safe and maintenance-free operation for many years.

Tube Preparation. Several machine stations perform different functions prior to filling and are as follows:

- Checking for presence of cap and cap tightening by means of sensors and adjustable clutches or torque-controlled motors.

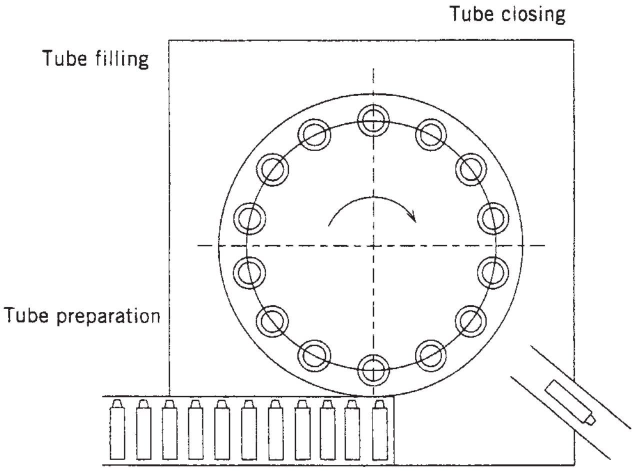

Figure 1. Tube handling.

- Checking for damage to the open end of the tube by mechanical or photoelectric sensors.
- Cleaning of the tube by clean-air blast and vacuum; also purging of the tube with inert gas to reduce the amount of residual oxygen in the filled tube.
- Printing registration and code verification by means of photoeyes and scanners. Tubes are rotated and adjusted by means of clutch brakes or servomotors. Ink-jet coding of the tube can be done while the tube is rotating.

Tube Filling. The tubes are filled by a filling nozzle that dives into the tube before the filling process. As the material is discharged from the nozzle, the nozzle is retracted out of the tube, keeping a constant distance between the nozzle outlet and the rising level. This relative movement between the tube and the filing system ensures continuous filling without air entrapment. After the predetermined amount of filling material has been discharged, the filling material, which in most cases tends to string, has to be cut off and—depending on the behavior of the material—several different nozzle-cutoff systems are available (Figure 2).

Most tubes are filled with a single product. But more applications have developed, mostly in the toothpaste industry, where two or three different components arranged in stripes over the whole tube length have to be filled. This so-called deep-stripe filling system is becoming more popular than the conventional surface stripes (Figure 3).

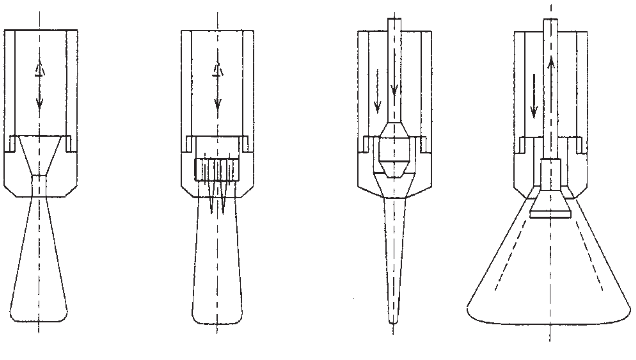

Figure 2. Different types of nozzle systems.

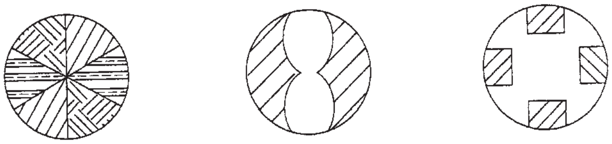

Figure 3. Cross sections of deep-striping.

Although filling nozzle systems depend mostly on the filling product, a basic common design for the dosing system is used, which comprises a volumetric pump dosing system consisting of cylinder and piston with two valves or a three-way rotary valve. One of the most critical parts of this system is the seal between the piston and the cylinder. For abrasive products such as toothpaste, the necessary sealing materials must be carefully selected. The typical cup seals made from polyurethane, Viton, PTFE, or polyethylene are subject to wear and have to be replaced at regular intervals. As an alternative, ceramic components can be used. Unlike ceramic coatings, solid ceramic parts (e.g., aluminum oxide) have absolutely no pores and combine very high hardness and resistance to wear with excellent chemical resistance and food-grade characteristics.

Parts in contact with the filling material in tube fillers easily can be dismantled, cleaned, and sterilized. To avoid any risk of microbiological contamination during assembly of a clean system, the assembled unit can be sterilized in place. These so-called clean-in-place (CIP) systems are used more and more in the pharmaceutical industry.

Tube Closing. Different materials require different types of closure. Normally, most tube fillers are equipped for one type of tube closure.

TUBE TYPES

Metal Tubes. Metal tubes are closed by folding, which means that the tube end is flattened and folded over. Various types of fold are possible: double fold, four fold, and saddle fold (Figure 4).

The actual folding process is carried out by two folding jaws and a hinged folding tool. For the required precision and speed, the system is cam-driven. In many cases, a latex or heat-sealable lacquer is applied inside the fold area for a hermetic seal.

Foil Laminate Tubes. The safest method of sealing plastic tubes with a thin aluminum foil layer is high-frequency sealing. High frequency generates an eddy current in the aluminum layer, which heats up the aluminum and the neighboring plastic layers (Figure 5).

Plastic Tubes. Today the most common tube material is plastic. Originally polyethylene was used in a single layer and the tubes were sealed between heated jaws as shown in Figure 6. The system applies heat on the outside of the

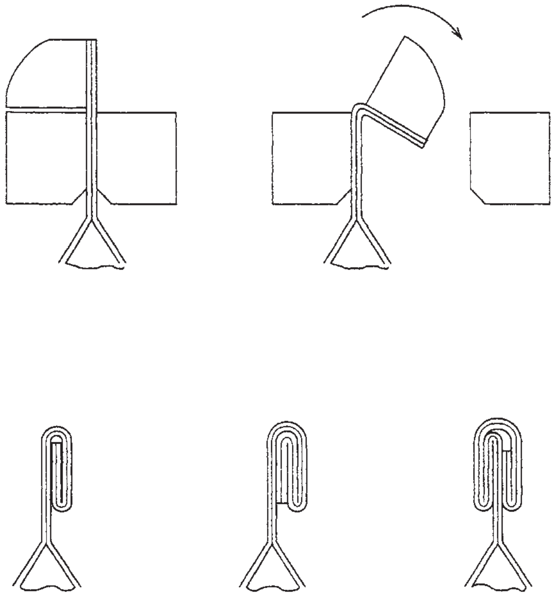

Figure 4. Metal tube folds.

tube to heat to the inside for sealing. This process is less efficient than high-frequency sealing, where the heat is generated directly at the inside layer to be sealed. Consequently, the hot-jaw system requires a longer heating time and, therefore, a reduced cycling speed. This reason is why this system is hardly used today in new machines.

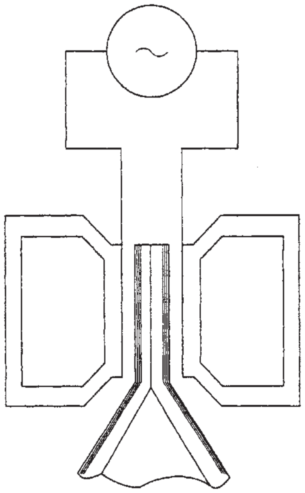

Figure 5. High-frequency sealing system.

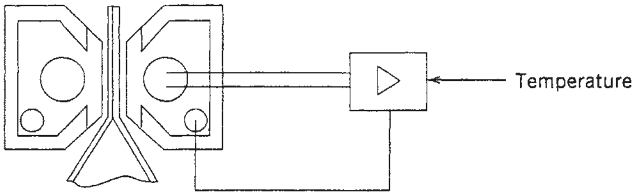

Figure 6. Hot-jaw sealing system.

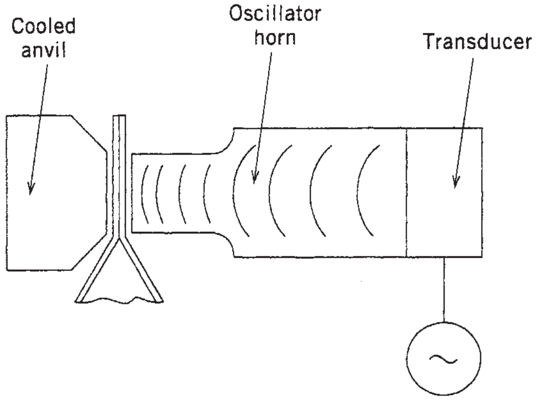

Figure 7. Ultrasonic sealing system.

Another method for closing plastic tubes is ultrasonic sealing (Figure 7). This system applies mechanical vibration to the outside of the tube, which induces friction, which—in turn—generates heat to seal the tube. This sealing method is suitable only for moderate speeds.

Because of the above-mentioned restrictions, the preferred method for sealing laminated and plastic tubes today is hot-air sealing. This system heats the seal area inside the tube by hot air. In a subsequent station, the tube is then pressed and chilled (Figure 8). The system is suitable for speeds well in excess of 100 min^{-1}.

The pressing station for the hot air system is also necessary for the other types of tube closure. It provides a tight seal and improves the aesthetics of the tubes, it

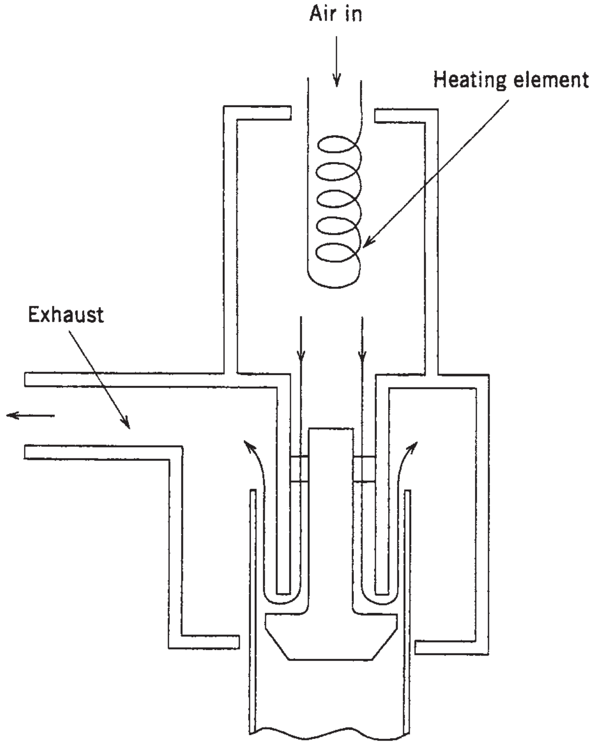

Figure 8. Hot-air sealing system.

also is used to apply a code (i.e., batch number or expiration date).

All modern packaging machines are equipped with programmable logic controllers (PLCs) to control and monitor all machine functions. Clear text displays are used to guide the operator and to provide information about the production process, such as machine speeds and number of packs produced. Interface for data link for central line controls are available.

TUBES, COLLAPSIBLE

Christopher White
The Tube Council of
North America

The collapsible tube, be they aluminum, plastic, or laminate, is a most unique package allowing the user ease of dispensing and, where necessary, application of product directly to the area of use. The tube is a perfect package for viscous products such as dentifrice, pharmaceutical creams and ointments, cosmetic creams and gels, and household and industrial products.

The tube definitely is a package for food products where the contents can be conveniently used in precise amounts when required. Examples of food products contained in tube abound in the European and Asian markets. Examples such as tomato paste, fish and meat paté, garlic paste, and dessert toppings can be found in gourmet shops around the world. But other food products in tubes may include preserves, mustards, chocolate sauces, mayonnaise, mustard, and cheese spreads. In short, the tube is ideal for delivering the product to the consumer's toothbrush or dinner table, given creative application and packaging technology.

The Tube Council of North America reported that Americans purchased nearly 15.0 billion tubes in 2003. The market for products packaged in tubes continues to grow fueled by new materials and the consumers hunger for convenience in their life.

The first tubes, manufactured back in the mid-1800s, were for artist colors. Shortly thereafter, in 1893, a dentist by the name of Dr. Sheffield saw the convenience his patients could enjoy if the tube could contain dental cremes, replacing powders and the use of a rather unsanitary common jar—hence, the toothpaste tube with all the benefits. The original tubes were produced from soft metals, mostly tin or lead or an alloy of these. The aluminum tube was introduced in the mid-1950s and has been consistently improved in the years that followed. Today, the metal tubes are predominantly aluminum. The only tin tubes are for special pharmaceutical applications, mostly ophthalmic. The 1170 Aluminum Alloy used by tube manufacturers in North America is the highest purity available. The 99.7% pure aluminum is virtually free of trace substances and extrudes a seamless package. New, high barrier internal liners and specially sealed necks made the aluminum tube the package of choice for products requiring an absolute oxygen barrier. Additionally, aluminum tube decorations utilizing the metallic surface add unsurpassed luster to the appearance of the package (see also Decorating).

In the 1950s, metal tubes were joined by the plastic tube. The immediate appeal of plastic was obvious to every manufacturer of cosmetics and hair care products. The plastic tube kept its "just home from the store" look through its life in the bathroom or vanity. It could be extruded in clear or colored resins to enhance the package aesthetics. The plastic tube perfectly complemented the aluminum tube and allowed the launch of a whole new range of products not previously found in tubes.

In the early 1970s, laminate tubes joined their metal and plastic cousins. The barrier properties of laminate, coupled with the limited suck back of air accomplished by the inclusion of an aluminum foil layer, gave laminate greater product appeal for products such as toothpaste. In the ensuing years the laminate tube effectively captured the dentifrice market. It has now been selected to package products as diverse as mayonnaise and vaginal cream. The laminate tube surface may be printed on the web, allowing an eye-catching graphic presentation, even including scenic images or the human likeness.

THE METAL TUBE

The aluminum tube production process starts with an aluminum slug roughly varying in size from a dime to a silver dollar. The slug will be the approximate diameter of the tube and the slug thickness predetermined to minimize trimming to the length prescribed by the customer. The slug will either be a donut, having a center hole, or a solid. The solid slug is most often used to extrude a one-piece tube with an integral diaphragm forming the tamper-evident sealed neck feature. The tube manufacturer may elect to use flat or dished slugs, depending upon the design of their production equipment and tooling.

State-of-the-art aluminum tube production line commonly run at speeds varying from 200 to 500 tubes per minute. The slug is impact extruded one up; that is, one tube is made one at a time, three times per second. Aluminum tube lines are readily available from machinery suppliers in Europe, including Polytype and Hinterkopf.

The aluminum tube is formed by impact extrusion accomplished horizontally. The tube slug is first tumbled with a lubricant, generally zinc stearate, USP. It is then fed into position in from of the shaft, and the press moves forward with an impact forces of 80–100 tons, depending upon the diameter and, to a lesser extent, the thickness of the slug, which prescribes the length of the tube. A section of the typical tooling setup is shown in Figure 1. The male tool head matches the inside profile of the final tube. The largest diameter is only $\frac{1}{32} - \frac{1}{16}$ in. (0.8–1.6 mm) long, after which it tapers back to a diameter that runs around 0.008 in. (0.2 mm) smaller than the tip. The clearance between the male tool and the female cavity establishes the wall thickness of the tube sleeve.

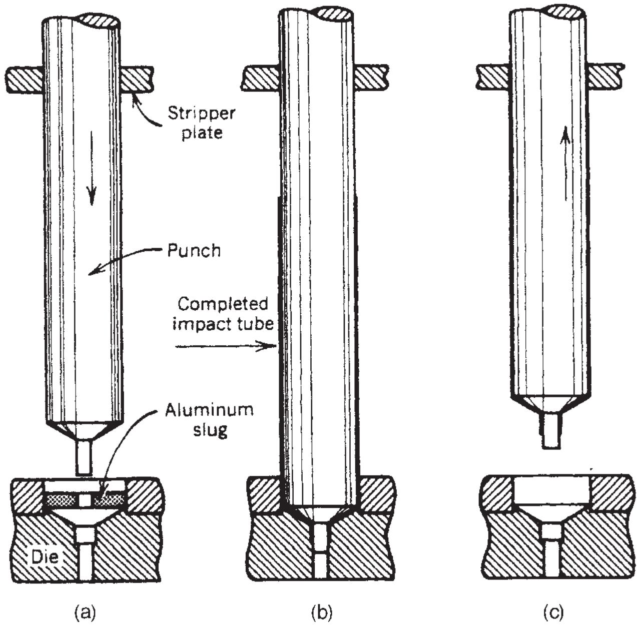

Figure 1. Impact extrusion of a metal tube: (**a**) beginning impact stroke; (**b**) bottom of stroke, (**c**) beginning to strip. (Courtesy of Herlan & Co.)

The slug is automatically fed into the cavity and is compressed by the male tool as it moves down. The first portion of the stroke seats the slug and takes up the bearing slack of the press. The balance of the stroke cold-works the slug, forming the head of the tube. As the plunger continues moving down, the excess metal is extruded out around the sides of the plunger, forming the body. Since the metal never reaches its melting point, the body is cold enough to maintain its shape and additional support from the tooling beyond the head area is not required. As the plunger moves back at the end of the stroke, the completed tube is stripped off, falling into a transfer conveyor, which takes it to the trimming operation. Here, the body is trimmed to exact length, cap threads are rolled onto the neck, and the mouth of the tube is trimmed.

By now the tube has been severely work-hardened and has the feel of an aluminum can. To relieve this hardness, it is annealed in an 1100°F (593 °C) oven and cooled, after which a spray application of a product-resistant lining is applied. A number of tough epoxy–phenolic or acrylic lacquers are available that not only resist the attack of the product but can be creased without chipping or peeling from the ???. “After the internal lining has been cured, ??? with either a white or colored base coat, usually enamel or, optionally, an acrylic, polyurethane, ??? gives an opaque printing base to the tube sidewalls. The shoulder of the tube may also be coated to complete the look desired. Another base sidewall coating involves the use of clear or translucent lacquers that utilize the aluminum surface to achieve a metallic appearance.”

Metal tubes are printed by a dry offset process (see Decorating; Printing) using either thermally or UV-cured inks (see Curing; Inks). The tube is pushed on a mandrel and rolled past a curved printing blanket, which applies up to six colors simultaneously. The tube now goes through a final drying cycle to cure the ink, after which the cap is applied and the tube is automatically packed in boxes for shipment, usually nested in a dividerless tray, for shipment to the customer.

PLASTIC TUBES

The first practical plastic-tube patent was issued in 1954 (1). The patent covered the process of making a thin plastic sleeve by an extrusion method (see Extrusion) and then injection-molding (see Injection molding) a head on one end to produce a tube. Modern equipment has improved but has not changed the basic Strahm concept.

Many plastics can be used to make plastic tubes; LDPE, MDPE, HDPE, LDPE are the primary materials used today (see Polyethylene, Low-Density). It has high-moisture-barrier properties, low cost, and good appearance. Its lack of oxygen and flavor barrier have been improved with barrier coatings. It was the development of a barrier coating by American Can Co. that made the plastic tube a practical container for general packaging.

HDPE (see Polyethylene, High-Density) is used for packaging some hydrocarbon-based products such as grease, and PP (see Polypropylene) is used for applications requiring nonstraining, better perfume barrier, or higher temperature resistance. Both HDPE and PP are much stiffer than LDPE for tube sidewalls and are not as popular.

COEX tubes, a coextrusion of EVOH and polyethylene, has been demonstrated to have excellent barrier properties enabling manufacturers of products that are adversely affected by air or moisture transmission the option of using the plastic tube. It was quickly adopted by toothpaste manufacturers where flavor loss in conventional plastic tubes was unacceptable. The COEX tube is often specified with a stand-up hinged cap. The COEX tube, otherwise, has all the functions of plastic.

The selection of a suitable plastic for producing a tube is critical to its performance. DuPont Alathon 2020T, a 0.92-g/cm^3-density resin with a melt index of 1.0, is the primary LDPE resin used by all tube manufacturers in the United States. It has good processibility, excellent stress-crack resistance to product attack, and an extremely low gel content, which reduces surface irregularities that would affect printing quality.

Plastic tubes are produced by two principal methods in the United States: the Strahm method and the Downs method. Both processes make excellent tubes.

Production of the tube begins with the extrusion of continuous thin-walled tubing (2). This has a wall thickness of 0.014–0.018 in. (0.35–0.46 mm), depending on the diameter. A standard extruder is used with a thin-walled tubing die. As the hot plastic emerges, it is corona-treated (2) (see Surface Modification) for later printing-ink adhesion. At the same time, it is drawn over a chilled internal forming mandrel and cooled on the outside with cold water. The tube cools and shrinks to an accurately controlled diameter as it is drawn off. After it has passed through the drive rolls of the haul-off unit, it is cut to exact length with a rotary knife cutter. This piece is called a sleeve to differentiate it from the completed container, which is called a tube.

Printing can be done before or after heading. The location is based on the layout and the relative scrap generated in printing and heading. All tubes are printed by dry offset printing. The same type of printer used for metal tubes is used for plastic sleeves. Thermally dried and UV-dried inks are available in a full range of colors. Good-quality process printing is possible, and for cosmetic applications, postdecoration with hot-stamp foils or silk screening is popular (see Decorating).

After the ink has cured, the sleeves are roller-coated with a high-gloss, oxygen- and flavor-barrier coating. High-barrier, two-component amine-cured epoxy coatings are available that reduce the overall tube permeability by a factor of 10. Special coatings more resistant to product staining or having lower coefficients of friction are also used. Most coatings are thermally cured, but UV-curable coatings are beginning to be used. These provide equally high barriers to oxygen and essential oils and cure more quickly. After the coating is cured, the completed sleeves are headed.

The head of a plastic tube must be compatible with the sleeve in order to produce a good bond. Sleeves made of LDPE can be headed with LDPE or HDPE, but PP sleeves must have a PP head. Head thickness is 0.030–0.065 in. (0.76–1.65 mm), depending on tube diameter and application.

The Strahm heading process traps the top end of the sleeve in an injection mold and injects plastic into the cavity to form the head and bond it to the sleeve. The process is done with multiple tools at each station. Slower machines have a female tool that remains in the injection station, and the tube is held there until it has cooled sufficiently before moving to the next position. The higher-speed machines have locked-die tooling, as shown in Figure 2. The male tool containing the sleeve is pushed up into the shoulder cavity. The end of the sleeve enters the shoulder cavity, rolling in slightly as it touches the radius of the shoulder. At the same time, the support sleeve, which moves with the male tool, contacts the shoulder cavity, lifting it up against the thread plates. This forces the plates together in the position shown in Figure 2. The injection nozzle now closes on the assembly, and molten plastic from a small reciprocating-screw extruder is injected to form the head and bond it to the sleeve. Injectioncavity pressures are low since excessive pressure causes "blowby," forcing plastic past the head area and down the sleeve wall. Melt temperature of the plastic is generally over 500°F (260 °C), high enough to ensure a good fusion seal to the sleeve wall. After the injection cycle, the nozzle retracts. The tooling remains locked together and continues to the next station. After the head cools, the male tool drops, the thread plates open, and the completed tube is released, remaining on the male tool. The die body and cavity support move off to one side to allow the completed tube to be extracted. A new sleeve is then placed on the tool, the female tooling moves over the top of the male tools, and the cycle is repeated.

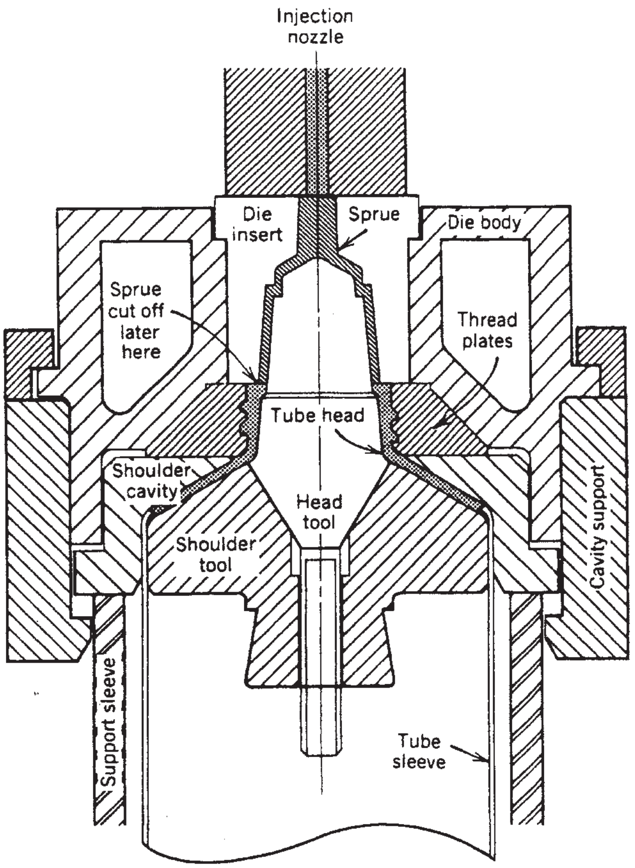

Figure 2. Strahm heading method.

After cooling, the completed tube is transferred to a snipper-capper. Here, the sprue is removed and a cap is applied, after which the tube is packed in unpartitioned trays for shipment to the customer.

In the Downs process (3, 4), the sleeve production is the same but the heading process is considerably different. As shown in Figure 3, the sleeve on its male tool enters a punch, which is placed just above a continuous strip of LDPE heated to well above its softening point. This strip is ~2 in. (51 mm) wide and $\frac{1}{8}$ in. (3.2 mm) thick. When the leading edge of the sleeve is about flush with the cutting edge of the punch, both parts move down into the semi-molten mass below. The punch forms a disk of plastic the diameter of the sleeve, and the sleeve inside the punch immediately adheres to it. The tool moves up, carrying the sleeve bonded to the hot plastic disk and indexes to the next station. Here, the female tool closes on the sleeve and head disk, compression-molding the head into its final shape. The compression-molding method eliminates the sprue and the snipping operation necessary with the Strahm process.

More recent commercial Downs machines have multiple heads at each station to make a number of tubes simultaneously.

A third process, developed by KMK (Karl Magerle AG Hinwil, Switzerland) (5), injects a "donut" of molten plastic in the female cavity before it closes on the male cavity. The head is formed by compression molding. The Magerle

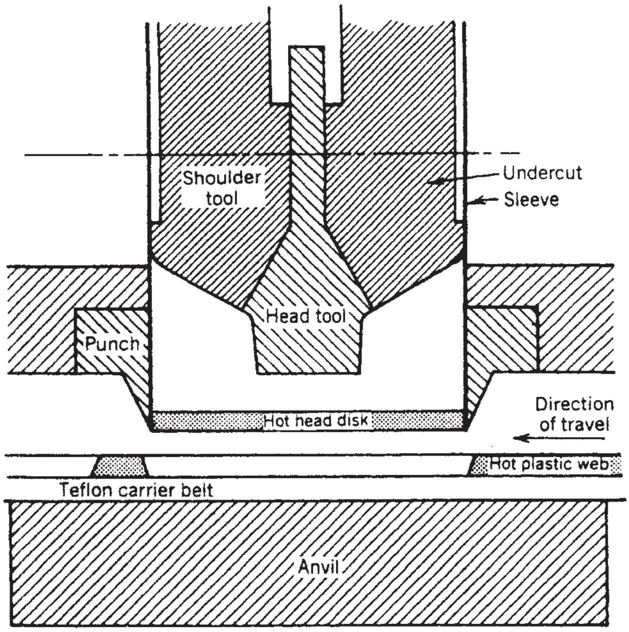

Figure 3. Downs process; head disk just after blanking out.

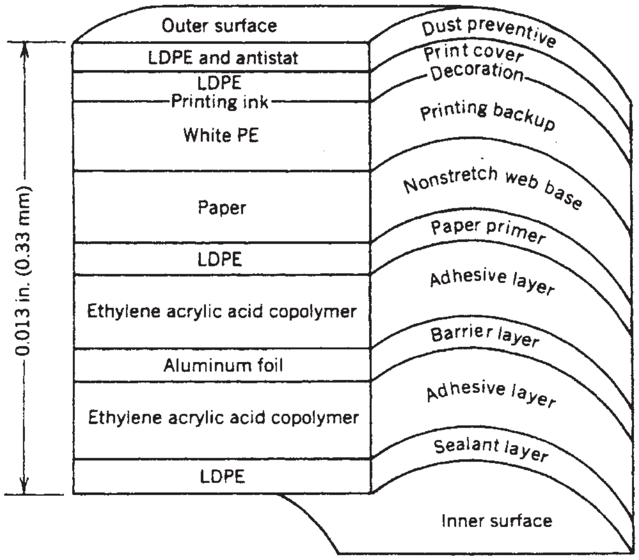

Figure 4. Typical structure of a laminate toothpaste tube.

machines are small, with only one tool per station, but they also incorporate capping on the same turret.

Although these are the most common methods, other processes have been developed. In Europe, the Valer Flax process (6) uses a premolded head that is spin-welded to the sleeve. Several companies have developed blowmolding methods (7) where the tube is blown as a bottle and the bottom is trimmed off. This approach generates a high amount of scrap that must be put back into the process, and care must be taken to maintain uniform wall thickness for the later printing step.

LAMINATED TUBES

In 1971 Procter & Gamble switched their Crest dentifrice to a laminate tube. The laminated material (see Laminating Machinery) consisted of seven layers with paper, plastic, and foil acting as the barrier. The foil was far superior to the plastic tubes then available and minimized flavor loss to acceptable levels. The laminate replaced the lead tube then being used by P & G for Crest.

The chief difference between this package and the plastic tube is the sleeve, made from preprinted laminate web (8, 9). It contains up to 10 layers, each contributing to the function of the structure. Figure 4 shows the material in each layer and describes its use. The complete laminate, 0.013 in. (0.33 mm) thick, is produced on an extrusion laminating line (10). This web is made in large rolls that are slit into the proper width for the tube being made. The slit rolls are shipped to the tube plant, where they are formed into sleeves. The sleeve has an impermeable aluminum layer, so the only permeation is along the seam overlap.

The seaming process takes the flat web, folds it into cylindrical form, and seams it to form a continuous tube (11). The seam must protect the raw edge of the foil; this is achieved by overlapping the edges of the sleeve, then heating and compressing the overlapped portion to squeeze some of the plastic out around the raw edge of the foil and paper. After the sleeve has been seamed, it is cut to length using the print registration marks on the web.

The presence of aluminum foil in the sleeve permits use of rf energy for induction heating (12). This is preferred in the seaming process because it permits better control of heat distribution.

To take full advantage of the vastly improved barrier properties of the laminated sleeve, an oxygen and flavor barrier is necessary in the head area. This is accomplished with a premolded insert (13) of polybutylene terephthalate (PBT), which has good oxygen- and flavor-barrier properties, can withstand the injection pressures and temperatures of the heading plastic, and does not crack in the head. Urea inserts are also used. The insert is placed on the heading tool before the sleeve is placed in position, and the head plastic locks the insert in position as it bonds to the sleeve. The resultant tube has some permeation windows along the sleeve seam and the area where the head bonds to the sleeve, but the result is still a very low gas and flavor permeability.

Alternative methods of producing laminated stock and tubes have also been developed, as well as alternative materials.

The American Can approach for seaming requires the axis of the tube to be parallel with the length of the laminated web (11). KMK has developed another system (14), where the axis of the tube is perpendicular to the web. In this process, the blank is cut from the web and wrapped around a fixed mandrel and sealed. KMK uses the heading process described under the plastic tube section above.

Another Swiss manufacturer, AISA (Automation Industrielle SA), has produced a machine using premoled heads that are bonded to the sleeve with rf induction (15). To ensure a good bond, a foil laminate disk, called a rondelle (16), is placed over the shoulder of the tube. The sleeve is butted against the rondelle, and the rf bond is made. This approach still requires a urea or PBT insert to act as a flavor barrier.

NEW TUBE CONCEPTS

The relatively recent appearance of ethylene–vinyl alcohol (EVOH) (see Ethylene–vinyl alcohol) as a clear barrier plastic has made possible the development of an all-plastic barrier tube (see Barrier Polymers). Coextrusion methods are available for producing laminates, and the Japanese have produced coextruded sleeves and blow-moled barrier tubes (7). The latter tubes have a continuous barrier; that is, there are no higher permeation areas such as side seams or head bonds. At present, the all-plastic barrier tube is not economically competitive with a laminated structure. EVOH costs about the same as aluminum foil, so there are no material cost savings involved. The advantage of being able to print flat web is an important factor in the cost of the laminated tube which would appear to limit the appeal of this new concept. However, a significant drop in the price of EVOH relative to aluminum foil or the development of a new market where higher-barrier properties are required could quickly change its importance. As well as the newest tube, polyfoil, made by Plastube of Canada.

BIBLIOGRAPHY

1. A. Strahm, U.S. Patent 2,673,374, March 30, 1954 (to American Can Co.). (Describes basic heading concept.)
2. R. Brandt and J. Piltzecker, U.S. Patent 3,849,286, November 19, 1974 (to American Can Co.). (Details the sleeve extrusion process.)
3. M. Downs, U.S. Patent 3,047,910, August 7, 1962 (to Plastomer Development Corp.). (Offers good description of basic Downs heading machine.)
4. R. Tartaglia, U.S. Patent 3,591,896, July 13, 1911 (to Peerless Tube Co.). (Contains good drawings of the basic commercial machine using the Downs process.)
5. K. Magerle, U.S. Patent 4,352,775, October 5, 1982 (Shows Magerle heading process.)
6. V. Flax, U.S. Patent 3,824,145, July 16, 1984 (to Continentalplastic AG). (Contains good drawings of spin-welding method of heading.)
7. M. Yamada, T. Sugimoto, and J. Yazaki, U.S. Patent 4,261,482, April 14, 1981 (to Toyo Seikan Kaisha, Ltd. and Lion Hanigaki Kabushiki Kaisha). (Describes blow-molded tube with EVOH barrier.)
8. R. Brandt and R. Kaercher, U.S. Patent 3,260,410, July 12, 1966 (to American Can Co.). (Shows basic laminate structure.)
9. R. Brandt and N. Mestanas, U.S. Patent 3,347,411, October 17, 1967 (to American Can Co.). (Basic article patent of laminated tube.)
10. D. Haas, U.S. Patent 3,505,143, April 7, 1970 (to American Can Co.). (Shows laminating process.)
11. A Grimsley and C. Scheindel, U.S. Patent 3,388,017, June 11, 1968 (to American Can Co.). (Describes side seaming of laminated sleeves.)
12. W. Gillespie and H. Inglis, U.S. Patent 4,210,477, July 1, 1980 (to American Can Co.). (Illustrates rf induction seaming coil design.)
13. A. Grimsley, U.S. Patent 3,565,293, February 23, 1971 (to American Can Co.). (Describes head inserts.)
14. U.S. Patent 4,200,482, April 29, 1980 (to KMK AG). (Shows Magerle side seamer.)
15. G. Schmid and R. Jeker, U.S. Patent 4,123,312, October 31, 1978 (to Automation Industrielle SA). (Shows AISA seaming and heading process.)
16. A. Kohler, U.S. Patent 4,448,829, May 15, 1984 (to Automation Industrielle SA). (Shows AISA rondelle.)

General References

N. L. Ward, “Cold (Impact) Extrusion of Aluminum Alloy Part,” in T. Lyman, ed., *Metals Handbook*, Vol. 4, 8th edition, American Society for Metals, Metals Park, OH, 1969, pp. 490–494. (Discusses impact extrusion of aluminum in general, with little specific information on tubes.)

ASTM Committee on Aluminum and Aluminum Alloys, “Introduction to Aluminum” in *Metals Handbook*, Vol. 2, 9th edition, American Society for Metals, Metals Park, OH, 1979, pp. 3–23. (Briefly refers to aluminum alloys.)

Packaging in Plastic and Glaminate Tubes, Washington Technical Center, American Can Co., Washington, NJ. (A nontechnical presentation of the manufacture of tubes and a good write-up on the problems of packaging in tubes and what to look for.)

Patents Describing the Strahm Process Of Heading, All Ultimately Assigned to American Can Co.

A. Strahm, U.S. Patent 2,713,369, July 19, 1955 (Illustrates sections of tube head and sleeve.)

A. Quinche and E. Lecluyse, U.S. Patent 2,812,548, November 12, 1957 (Shows the concept of split-thread plates.)

A. Quinche, U.S. Patent 2,994,107, August 1, 1961 (Describes first stationary-die heading machine.)

VACUUM PACKAGING

Richard Perdue
Taylor, South Carolina

From World War II came plastics, the wide commercial application of mechanical refrigeration, self-service supermarkets, the superhighway system, and a growth economy. During the late 1940s, Dewey and Almy Chemical Company purchased the patent and brought a new and unique French packaging development to the United States. The first significant commercial application of this concept was for vacuum packaging of whole turkeys using rubber stretch bags. These were soon replaced with PVDC shrink bags. The concept led to the wide commercial use of vacuum packaging for perishable (refrigerated and frozen) food: the Cryovac (registered trademark) vacuum-packaging process. In the $\geq$45 years since, many individuals and companies have contributed to the technical advancement and wide successful commercial use of vacuum packaging for the preservation, distribution, and marketing of perishable foods. In future annals of history, vacuum packaging of perishable foods in flexible and semirigid plastic films should be ranked right up there with canning, pasteurizing, and quick-frozen foods as a technological breakthrough that contributed greatly to improving the quality of life for humankind!

Vacuum packaging involves the placing, either manually or automatically, of a perishable food inside a plastic film package and then, by physical or mechanical means, removing air from inside the package so that the packaging material remains in close contact with the product surfaces after sealing.

Packaging in this manner, depending on the product being packaged the barrier properties of the packaging material, the level of air removal, and storage temperature, can substantially retard chemical and/or microbial deterioration of the food product. In many instances, this dramatically extends eating quality life.

AIR-REMOVAL SYSTEMS AND PACKAGING EQUIPMENT

Nozzle Vacuuming. Using this method of air removal, a nozzle connected to a vacuum pump is inserted inside the open end of a preformed bag or pouch (see Figure 1). The vacuum or air removal level using the nozzle system is seldom high, as the packaging material (depending on its modulus) quickly collapses onto the product surface and blocks significant air removal. Today, nozzle vacuumizing is widely used for packaging whole fresh and frozen poultry, fresh-cut vegetables and bulk packaging of fresh meats, poultry, fish, processed meats, nuts, and so on.

For whole poultry, manual and high-speed rotary nozzle machines that provide an aluminum clip closure are used. The twisting of the bag neck and clipping provides for good whole-bird shaping and sealing under high-moisture conditions. Nozzle vacuumizing provides for good bag to product (bird) cling, without collapsing the body cavity as can happen with high-vacuum-chamber systems.

For cut vegetables and bulk packaging, manual and semiautomatic nozzle vacuumizing combined with heat sealing predominates.

Chamber Vacuumizing. Using this method, the product is placed inside the flexible plastic film package, which is loaded into the bottom section of a vacuum chamber (Figure 2). Such systems usually consist of a top chamber and a bottom chamber. The chamber is closed, and a high vacuum is [in both cubic feet per minute (cfm, i.e., mL/min) and inches of mercury (in. Hg)] drawn on the chamber both inside and outside the package. Some chambers are usually vacuumized to $\geq$29 in. Hg.

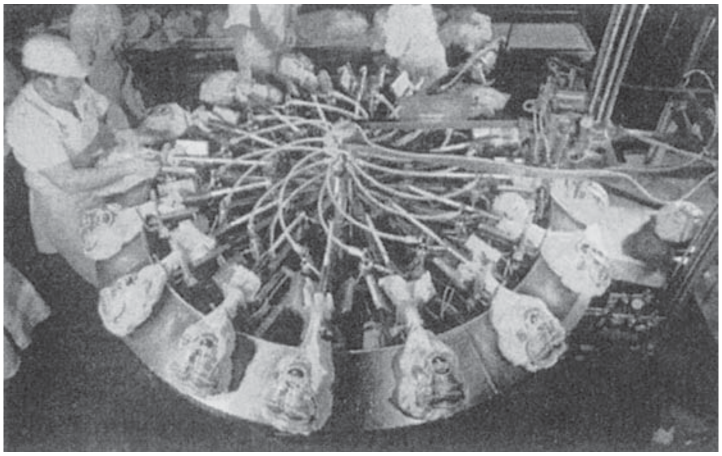

Figure 1. Nozzle vacuuming.

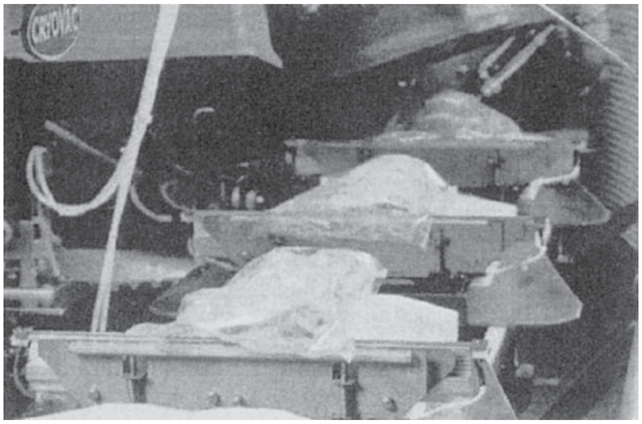

Figure 2. Chamber vacuumizing.

Chamber vacuumizing machines generally employ heat-seal closures and are available from manual through fully automatic rotary high-speed units. Such equipment uses shrink bags and laminate pouches. They are widely used to package fresh primal and subprimal meat cuts, smoked and processed meats, and natural cheeses. Some chamber units are also available that provide an aluminum clip closure inside the chamber.

Two other widely used chamber vacuumizing systems use rollstock films rather than preformed bags and pouches: thermoforming and vacuum skin packaging (VSP).

Thermoforming. Thermoforming vacuum-packaging machines dominate the packaging of consumer units of wieners, sliced luncheon meats, sliced bacon, smoked sausages, and some natural cheeses (Figure 3). Such machines operate using two rolls of multilayer (usually high-O_2-barrier) plastic film (top and bottom webs). The operation of a thermoforming machine involves feeding the bottom web into the machine by clamping the web by its edges and indexing it either (a) over a continuously moving train of thermoforming dies (pockets) or (b) in a parallel set of clamping chains that first indexes the bottom web over a thermoforming station. In both web-handling modes, the bottom web is heated, then vacuum and/or pressure formed.

The product is manually or automatically loaded into the formed pockets. The top web is then fed down over the bottom web between the two halves of the vacuum-sealing chamber. The two halves of the chamber close and a high vacuum ($\geq$29 in. Hg) is drawn on both sides of both webs and around the product. When the desired vacuum level is reached, the webs are heat-sealed together. The chamber(s) is (are) vented to atmosphere, opened, and the packages indexed out the machine and slit into individual units (see the Thermoforming article).

Vacuum Skin Packaging. There are great similarities between VSP (Figure 4) and thermoforming machines, with the primary differences involving how the forming web (bottom web in thermoforming and top web in VSP) is thermoformed and the plastic film structures used. Like thermoforming in an automatic VSP machine, the bottom web is fed through the machine by a parallel set of clamping chains. The bottom web may or may not be thermoformed slightly. It can be an oxygen barrier, nonbarrier flexible, or semirigid web. Again, as with thermoforming, the product is loaded onto the bottom web, a top web is fed down over the bottom web, and both are indexed between the two halves of a vacuum (skin) packaging chamber (see the Skin packaging article).

As the top web is fed down and into the VSP chamber, it is heated and may be partially thermoformed to fit over the product. When the chamber closes, the bottom web is pulled against the bottom of the VSP chamber with a high vacuum. The top web is either (a) suspended over the product by drawing an equal vacuum over both sides of the web and around the product or (b) is drawn against the heated surfaces of the upper half of the VSP chamber by a high vacuum, and the area around the product between the top and bottom webs is vacuumized. When the desired vacuum level is reached, the vacuum to the top of the chamber is vented to the atmosphere, and the heated top web instantaneously thermoforms to the shape of the product. At the same time, the two webs heatseal to each other wherever they come in contact. The bottom

Figure 3. Thermoforming.

Figure 4. Vacuum skin packaging.

chamber half is then vented, and the packages index out; they are slit into individual units as they do so.

Pressure. Probably the most simple means of producing a vacuum or negative-pressure package is through applying pressure to the outside of a bag or pouch that contains a product. Two methods have been used commercially. In the early days of fresh-red-meat vacuum packaging, a system of air removal involved holding a bag (with product) by its open end and lowering it into a tank of water so that the product was completely submerged with the open end of the bag still above the water, which forced air out. The open end of the bag was then gathered and closed with an aluminum clip.

Another pressure method used with bags and laminate pouches and today in packaging fresh cut vegetables is to squeeze the air out with sponges and heat seal the package prior to releasing the squeezing action of the sponges.

Hot Fill. This process is used to package pumpable prepared foods in flexible, oxygen-barrier plastic film packages. By hot filling, usually above 180°F, steam is present, which helps to exhaust air from the product and headspace of the package just prior to sealing. Such packages are then rapidly chilled, which creates a package with a negative pressure inside (Figure 5).

Following is a discussion of each perishable-food category with emphasis on why specific vacuum-packaging systems are used to preserve, distribute, and market each.

Poultry. Vacuum packaging of fresh poultry is done primarily to retard the growth of aerobic spoilage bacteria, and to provide an attractive leakproof (moisture) package (Figure 6). When packaging fresh poultry, care must be taken to avoid establishing conditions that support the growth of H_2S-producing bacteria. These bacteria are commonly present on fresh poultry and grow best above 34°F and under low-O_2 conditions. Therefore, fresh whole Rock Cornish, roasters, and turkeys are vacuum packaged using O_2-permeable shrink bags. Some cut-up fresh poultry is now being vacuum-packaged using thermoforming and O_2-permeable structures. Some boneless/skinless parts are being vacuum-skin packaged.

Figure 6. Vacuum packaging for poultry.

As for frozen whole and portioned fresh poultry, vacuum packaging in O_2 permeable shrink bags dominates. The bags are coextruded, multilayer polyolefin structures with a modified polypropylene (PP) outer layer to provide high gloss and freezer-case scuff resistance, and an electron-beam crosslinked polyethelene (PE) inner layer. This PE layer provides cold-abuse toughness, high hot-water shrinkability, and both heat and clip sealability. Good wrinkle-free film-to-product cling provided by the vacuumized shrink bag is essential for attractive, frost-free packages. A high oxygen barrier is not required as frozen fresh poultry does not develop significant oxidative rancidity during typical storage and distribution.

Fresh Red Meats (Beef, Pork, Veal, Lamb, and Venison). Today about 90% of the fresh beef primal and subprimal cuts shipped to food service and retail are vacuum-packaged in high-oxygen-barrier shrink bags (Figure 7). Such bags are made of coextruded materials consisting of an outer EVA or linear low-density polyethylene (LLDPE) layer, a PVDC barrier layer, and an electron-beam crosslinked EVA or LLDPE heat-sealable/clipable inner layer.

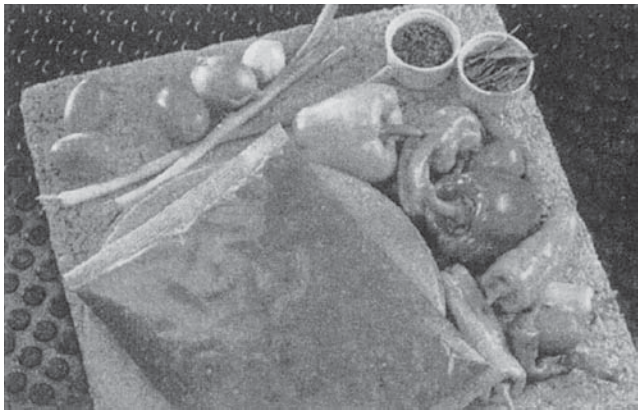

Figure 5. Hot fill.

Figure 7. Vacuum packaging for red meat.

Most fresh-red-meat (FRM) vacuum packages are produced on high-speed, high-vacuum, heat-sealing rotary chamber packaging machines. For bone-in FRM cuts, bags are available with bone-puncture-resistant patches laminated to the outside. Veal and lamb cuts are also vacuum packaged in this manner. The application of this technology was slow to develop for fresh pork. Several years ago the industry did start using this technology for boneless loins and tenders. With the advent of the "boneguard" shrink bag, bone-in loins were successfully packaged. The industry is now rapidly converting to shrink-bag vacuum packaging of bone-in pork loins for retail distribution.

The "aging" of beef is a tenderizing process that takes place as a result of naturally present enzymes. Vacuum packaging was first applied to beef by purveyors to age steaks and roasts for the food-service industry. Beef could be "aged" for up to 30 days without any significant shrink or trim loss. It was then applied to beef (later to veal, lamb, and pork) for retail, which dramatically improved the distribution and marketing. In fact, this development ultimately resulted in a total restructuring of the beef industry. The preservation aspects of FRM barrier shrink packaging are threefold: (a) retard the growth of aerobic spoilage microorganisms, (b) prevent the chemical degradation of myoglobin, and (c) minimize the loss of moisture.

As FRM is chemically alive and using some oxygen, oxygen permeability below $200\,\text{mL/m}^2$ will shift the microbial population from aerobes to facultative anaerobes (lactic acid producing). To minimize myoglobin degradation and provide adequate red-color (oxymyoglobin) regeneration and stability for retail display, oxygen permeabilities below $50\,\text{mL/m}^2$ are required. Most of the barrier shrink bags used today have O_2 permeabilities below $30\,\text{mL/m}^2$. As shrink bags are excellent moisture barriers, the moisture loss of major concern is "purge" (free liquid that separates from the meat). The cut of FRM packaged, temperature, and other product factors influence moisture separation.

From the package standpoint, the absence of minute negative pressure voids or cavities is critical. The application of high package vacuum to maximize film to product surface cling, and excellent hot-water shrink to minimize film wrinkles, provides for the least purge development.

Fresh ground beef and pork sausage are major FRM product categories. Although not truly vacuum packaged, they are pressure packaged in tubular oxygen-barrier packages. Today, most packages for these products are produced on vertical form/fill/seal machines that provide metal clip closures. The films used are coextruded structures. For ground beef: PE or EVA/nylon/EVOH, nylon/PE, or EVA with appropriate tie layers. For pork sausage: EVA/PVDC/EVA.

For individually cut fresh and frozen steaks distributed primarily to food service, thermoforming vacuum packaging and vacuum skin packaging are widely used.

For fresh steaks, oxygen-barrier structures are required:

Thermoforming: nonforming web-biaxially oriented nylon or PET/PVDC/LLDPE or Surlyn (DuPont)

Forming web: cast nylon/EVOH/LLDPE or Surlyn

Vacuum skin packaging: forming web—PVDC/Surlyn or coextruded, electron-beam crosslinked LLDPE/EVOH/LLDPE

Nonforming web, similar to the nonforming web used in thermoforming

For frozen steaks, structures are similar to those used for fresh except the PVDC or EVOH layers are left out.

Cured, Smoked, and Processed Meats. This category includes such products a wieners, bacon, hams, loaves, smoked sausages, sliced luncheon meats, and corned beef. Today such products are manufactured using both red meats and poultry. These products are vacuum packaged in high-oxygen-barrier materials to retard aerobic microbial growth, prevent cured color degradation, and loss or degradation of the cooked and smoked flavors and development of fat rancidity (Figure 8). As chemical changes are of greatest preservation concern, products in this category are chamber vacuumized to minimize residual O_2 within the packages. Wieners, sliced bacon, and sliced luncheon meats are packaged using materials with O_2 permeabilities below $15\,\text{mL/(m}^2\cdot 24\,\text{h)}$. To prevent curing-induced color degradation, they are generally packaged using high-speed laminate rollstock thermoforing machines. The forming web is a coextruded or extrusion structure consisting of nylon/PVOC or EVOH/Surlyn or LLDPE with appropriate tie layers if coextruded. The top layer will be polyester or oriented-nylon PVDC coated and reverse-printed if desired; also it could be adhesive or extrusion laminated to Surlyn or LLDPE sealant.

The larger units such as loaves, hams, and corned beef are usually packaged using high-barrier shrink bags—coextruded EVA, LLDE/PVDC/EVA, LLDPE (electron-beam crosslinked). The packages are vacuumized and heat sealed using high-speed rotary chamber machines.

Natural Cheeses. Vacuum packaging of cheeses for curing and for loaves and consumer units of cured cheeses (Figure 9).

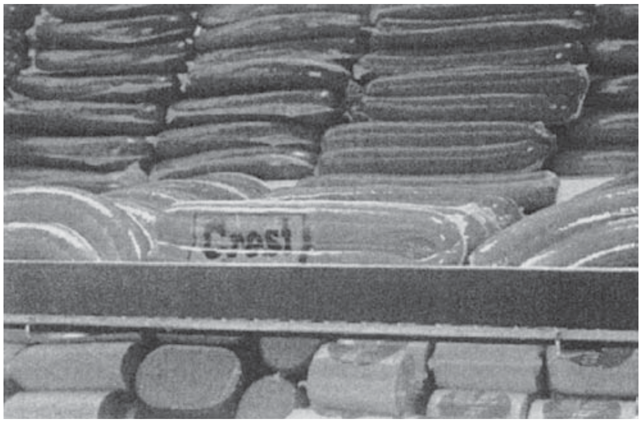

Figure 8. Vacuum packaging for cured, smoked, and processed meat.

Figure 9. Vacuum packaging for natural cheeses.

Curing. Cheddar cheese is formed into 40-lb rectangular blocks and vacuum packaged (chamber/heat sealed) using oxygen-barrier shrink bags and laminate pouches (nylon/LLDPE), then placed in strong, tight-fitting corrugated cartons for curing 90 days and longer. The vacuum packaging inhibits mold growth and moisture loss while allowing the non-gas-forming microbial curing to take place. After curing, the 40-lb blocks are cut into consumer units or used as manufacturing cheeses. Other non-gas-forming cheese varieties such as Gouda are also cured in this manner. More traditional shapes such as wheels, horns, and sticks of non-gas-producing varieties including Italian cheeses are cured using high-O_2-barrier shrink bags (see Figure 10).

For gas-producing cheeses (during curing) such as Swiss, high-CO_2-permeability shrink bags and nylon-based pouches are used. The O_2 permeability has to be kept below $250\,\mathrm{mL}/(\mathrm{m}^2 \cdot 24\,\mathrm{h})$ to retard mold growth during curing.

A unique application of shrink-bag vacuum packaging is for curing of wheels of Blue and Roquefort cheeses. After vacuum packaging and shrinking the barrier bag tightly around the uncured cheese wheel, which has been inoculated with the desired mold, long needles are forced through the wheel and removed to provide air channels to allow the mold to grow and develop the blue color.

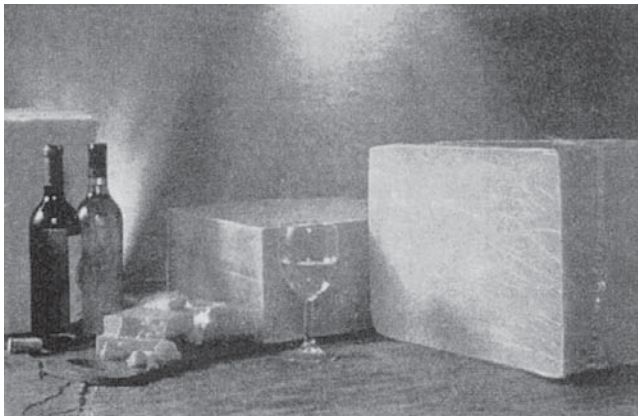

Figure 10. Curing.

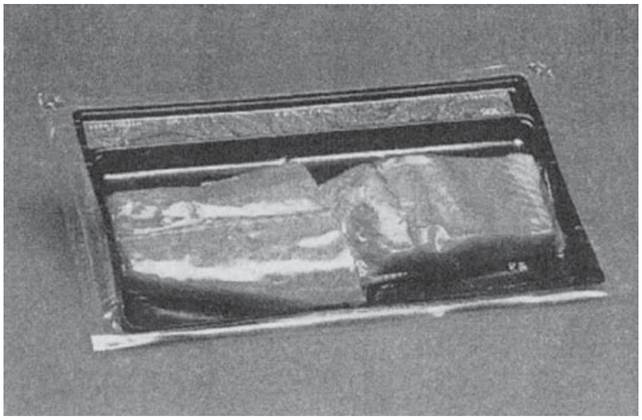

Figure 11. Vacuum packaging for fresh and frozen fish.

Retail Units. Chunks, sticks, blocks, loaves, and half moons of natural cheeses are vacuum packaged using O_2-barrier shrink bags and laminates using material structures and equipment systems very similar to previously described for smoked, cured, and processed meats. For cheese, such packaging is used to prevent mold growth, retard light-catalyzed oxidation of the butter fat on the surface, prevent surface color fading under display lights, and minimize moisture loss.

Fresh and Frozen Fish. With the growth of spoilage, bacteria can be retarded by vacuum packaging fresh fish in oxygen-barrier films. In the United States, doing so is looked on with disfavor by the U.S. Food and Drug Administration (FDA). *Clostridium botulin* type C, which is commonly found on fish, can grow under anaerobic conditions at temperatures as low as 39°F. This is well within the refrigerated distribution temperature ranges especially if abused. A vacuum-packaging system using O_2-permeable plastic films has been approved for improved shelf-life packaging of fresh fish.

Vacuum packaging using O_2-barrier shrink bags is being used successfully for frozen Alaskan salmon to replace ice glazing, to eliminate moisture loss (freezer burn) and rancidity, and for frozen tuna loin storage and transport to tuna-canning plants (Figure 11).

Fresh Produce. A new and rapidly growing end use for vacuum packaging is fresh-cut vegetables. Much of the food-service industry is on a fast track to remove the preparation of fresh vegetables from the back of the restaurant to central plants. The processing and extended-shelf-life packaging technology is now being applied to consumer packaging of such vegetables for retail supermarket sales. When the natural skin is removed from a vegetable or is cut in smaller segments (sliced, diced, etc.), extended shelf life can be provided through properly designed protective packaging. As fresh-cut vegetables are still alive and respiring, concern must be given to providing adequate O_2 and for release of the CO_2 produced. Fresh vegetables have been classified according to their respiration needs into three general groups as shown in the following table.

Respiration group	Vegetables	Film permeabilities [mL/($m^2 \cdot 24\,h$)]	
		O_2	CO_2
Light breathers	Carrots, potatoes, turnips	1000–3000	10,000–20,000
Medium breathers	Lettuce, celery, pepper	6000–7000	30,000–35,000
Heavy breathers	Broccoli, cauliflower, asparagus	15,000–20,000	75,000–100,000

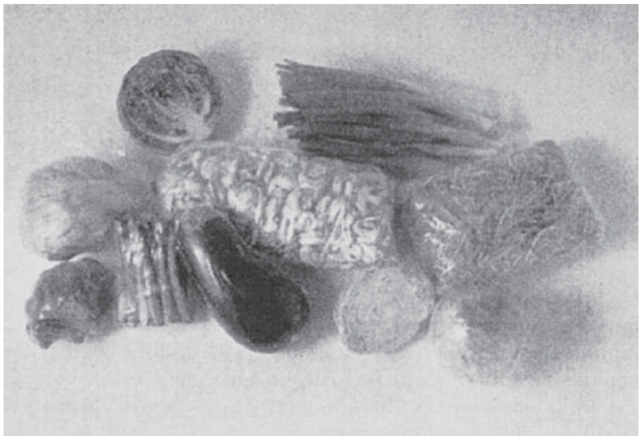

Figure 12. Vacuum packaging for fresh produce.

Such cut vegetables are packed in permeability modified polyolefin bags or film or vertical form/fill/seal machines (see the Form/fill/seal, vertical article). Bags are typically nozzle vacuumized and pressure squeezed to remove residual air from the package prior to heat sealing. For the various vegetables group, the polyolefin films are modified through resin variations and additives to achieve the desired O_2/CO_2 permeability.

The polyolefin films are adequate barriers to prevent significant moisture loss. The removal of the air from the package provides for the package quickly becoming a modified atmosphere. Under adequate refrigerated conditions, the O_2 will be maintained below 5% and the CO_2 in the 8–12% range. This slows down respiration and will significantly extend the eating-quality life of the cut vegetable. Large volumes of chopped lettuce, broccoli, and cauliflower florets are now being distributed to food service and retail in this manner. The vacuum or negative-pressure package also provides a good visual-quality measure of the package and product for both the producer and end user (Figures 12–14).

Figure 13. Vacuum packaging for fresh produce.

Figure 14. Vacuum packaging for fresh produce.

BIBLIOGRAPHY

General References

"Advances in Fish Science and Technology," in *Proceedings, Torry Research Station Conference*, Aberdeen, Scotland, 1979.

Chilled/Refrigerated Foods Conference, Proceedings, The Packaging Group, Inc., 1988.

A. L. Brody, *Controlled/Modified Atmosphere Packaging of Foods*, Food and Nutrition Press, Turnbull, CT, 1989.

E. Karmas, *Meat, Poultry and Seafood Technology—Recent Developments, Food Technology Review No. 56*, Noyes Data Corporation, Parkridge, NJ, 1982.

F. Kosikowski, *Cheese and Fermented Milk Foods*, published by the author, Ithaca, NY, 1966.

R. Lawrie, *Developments in Meat Science—1*, Applied Science Publishers, London, 1980.

R. Lawrie, *Developments in Meat Science—4*, Elsevier Applied Science, London, 1988.

F. A. Paine and Heather Y. Paine, *A Handbook of Food Packaging*, Blackie Academic and Professional, London, 1992.

M. E. Rhodes, *Food Protection Technology II*, Lewis Publishers, Chelsea, MI, 1990.

S. Sacharow and R. C. Griffin, Jr., *Principles of Food Packaging*, AVI Publishing Company, Westport, CT, 1980.

F. M. Terlizzi, R. R. Perdue, and L. L. Young, "Processing and Distributing Cooked Meats in Flexible Films," *Foods Technol.* p. 38 (March 1984).

VACUUM-BAG COFFEE PACKAGING

The concept of vacuum-bag packaging for ground coffee was introduced in the U.S. market years ago. It had been developed in Europe years before, but except for nonhermetic paper bags still used in the southeastern states, ground coffee in the United States has remained in the three-piece sanitary can with plastic covercap that replaced the key-opening can about 40 years ago. The new vacuum-bag package has been described as a “flexible can,” because it delivers the same vacuum-packed fresh coffee that the consumer buys in the can, but that is where the similarity stops. The “vac-bag” is rectangular rather than round, and it can be shelved standing up, or lying on its side like a “brick,” which is one of its less-glamorous names.

Coffee Characteristics. Coffee has some unique characteristics. After coffee beans are roasted, they slowly evolve CO_2 amounting to over 1000 cm^3/lb (2200 cm^3/kg) of product depending on the blend and roasting color. During grinding, the volume of CO_2 is reduced to about half, and depending on the grind size, it requires varying holdup times before packing. Grind size varies greatly depending on the type of coffee-brewing equipment used and individual taste preference. Typical fine grind for most European countries is 500–600 μm; North American coarser grinds are 800–1000 μm. Vacuum-bag packaging of coarser grinds present more of a problem because of slower degassing. At 6–8 in. Hg (20–27 kPa), a vac-bag becomes soft and it can even balloon like a football (positive pressure) if it has insufficient degassing. Because rigid metal cans are capable of withstanding full vacuum as well as positive pressure, they require a relatively short holdup time even for coarse grinds. Because ground coffee also varies in density, the height of fixed-cross-section bags varies as well. This variation means that the equipment and materials must be adaptable to a limited automatic height change during a production run. In addition, coffee must be protected from oxygen to maintain the freshness. Vacuum packing eliminates most of the oxygen from the package by the nature of the process.

The Vacuum Bag. The first commercial “vac-bag” packages were made in the early 1960s, probably in Sweden. At that time the package was a bag-in-box style (see Bag-in-box, dry product) that later evolved to a lower cost, bag-in-bag style, which is still the most widely used type in Europe and Canada. A still lower cost style, the single-wall bag, is being used to some extent in Europe and by the major coffee producers in the United States. The bag-in-bag style and the single-wall style function equally well in protecting the product, but they differ in appearance. High-quality graphics on the paper or foil/paper outer wrap of a bag-in-bag package gives a smooth surface appearance. Most single-wall bags have a rough or “orange peel” surface when under full vacuum. As with any package concept with more than one style, there are pros and cons for each, but the current U.S. market is predominately single-wall vac bag and is likely to stay that way.

Equipment. Because Europe spawned the vac-bag’s popularity, it is no surprise that all the automatic high-speed equipment is made there. There are three major equipment suppliers who compete in the coffee-packaging area and are as follows: SIG, Hesser, and Goglio (1–3). All have automatic high-speed (40–120-boxes-per-minute (bpm)], 1-lb (0.45-kg)-size machines capable of forming bags from roll stock material, filling, evacuating, sealing, and folding the top of the bag to deliver a finished vac-bag. Bags can be made in different ways from rollstock. Mandrel- and tubeforming machines form the bag, which is carried horizontally into the filler. After filling it is transferred into a vacuum chamber where it is evacuated and sealed. It is then transferred out of the vacuum chamber to a trimmer and final folding of the top. Tape or hot-melt glue are two methods used to hold the top folds in place. The sealing of the bag is what keeps it hard and under vacuum.

Materials. Each of the major equipment suppliers provides basic information on what packaging material properties are essential for efficient vac-bag production. Some differences exist, but many similarities also are present for achieving a low level of defects from the machine. Each vac-bag must be durable enough to survive the rigors of transportation, warehousing, and retail distribution to remain vacuum-packed at point of purchase. Although many European packers use a three-ply structure made of 48-gauge polyester film (OPET)/35-gauge aluminum foil (AF)/300-gauge sealant (see Film, polyester; Foil, aluminum; Sealing, heat), most U.S. coffee roasters employ a more durable four-ply structure. This structure can be accomplished by the addition of one of several films, such as biaxially oriented polypropylene (BOPP) (see Film, oriented polypropylene) or biaxially oriented nylon (BON) (see Nylon). These structures can be constructed in various ways but most typically as follows:

48-ga OPET/75 ga BOPP/35 ga AF/300 ga sealant
48-ga OPET/35 ga AF/60 ga BON/300 ga sealant

When these structures are designed for a single-wall bag, the OPET is reverse-printed. Gravure printing (see Printing) on OPET provides excellent graphics, high gloss, and a scuff-resistant package. Vacuum-metallized films (see Metallizing vacuum) have been used successfully in Europe and Canada as lower-cost foil replacements. Because their oxygen barrier may be lower than foil, each coffee packer must determine if nonfoil structures provide adequate barrier.

Currently, the best method to joint these materials into a finished structure is by adhesive lamination (see Laminating; Multilayer flexible packaging). To produce a finished structure with uniform-gauge control, high internal bond strength, minimum curl, and a controlled coefficient of friction, adhesive lamination has proven to be an excellent converting system. Both solvent- and solventless-type adhesive laminators (see Adhesives; Coating equipment) are now converting materials in the United States and Canada for coffee packers. These new high-speed automatic packaging machines require consistently high-quality materials to operate efficiently. All of the material converters acknowledge the sometimes difficult learning experience on vac-bag films and the need to set up a very thorough quality-control system.

Valves and Sorbents. Gas-off of CO_2 from ground coffee is a problem for vac-bag packagers that can be handled in several ways. The simplest solution is to grind the coffee beans very fine, as in Europe. The fine grind evolves gas more quickly and requires only a short holdup time ($1\frac{1}{2}$–2 h). The North American markets require coarse grinds, however, that need up to 24 h of holdup time and considerable storage capacity. Two methods exist to eliminate all holdup time. One is the one-way coffee valve, which allows CO_2 out of the bag without allowing O_2 into the bag (see Valves). The bag, however, is soft. This concept was tested in the United States by two major roasters, but it was abandoned in favor of the hard vac bag that consumers seem to prefer. The other method involves a new technology from Canada, whereby a CO_2-sorbent pouch is placed in the coffee bag much like a desiccant pouch is used for moisture-absorbing applications. This new coffee vac-bag technology allows the roaster to package freshly ground coffee without any holdup time and still obtain a hard vacuum bag. This benefit is not possible with any other system.

A growing coffee market has been found in specialty and gourmet stores where whole beans are purchased. The beans are generally not hermetically packaged, so CO_2 gas-off is not an issue. In this case, the use of a one-way valve is an excellent way to achieve an airtight package and keep the beans fresh. The valve can be heat-sealed into the bag film as done by Goglio and SIG. It also can be attached to the outside surface using a pressure-sensitive valve concept developed by Hesser.

Advantages. Vac-bag is seen as a low-cost package compared with metal cans. For some coffee packers, this low-cost advantage may be true if bag packing line speeds are equal to or greater than those for cans. For others, where the reverse is true, the material-cost advantage is not as large. Current 1-lb-size (0.45-kg-size) metal cans that include plastic overcap cost about \$0.17–\$0.19. A high-quality four-ply vac bag costs about \$0.08–\$0.10, which provides a material-cost advantage of about 9 cents per 1-lb (0.45-kg) package. Additionally, advantages are present in storage, handling, and shelving a vac-bag because of its compact shape. The reduction in cube is dramatic (35%). This cube reduction is beneficial to both manufacturer and retailer, because warehousing and shelving space is always a premium. As vac-bags become more widely distributed, consumers will determine the future for this new package.

BIBLIOGRAPHY

"Vacuum-Bag Coffee Packaging" in F. J. Nogent, ed., *The Wiley Encyclopedia of Packaging Technology*, 1st ed., by General Foods Corp., pp. 690–691.

1. Product literature, SIG Swiss Industrial Company, Represented by Raymond Automation Company, Inc., Norwalk, CT.
2. Product literature, Hesser Division of Bosch Package Machinery, S. Plainfield, NJ.
3. Product literature, Goglio, represented by Fres-co System USA, Inc., Telford, PA.

VIBRATION

Jorge Marcondes
San Jose State University,
San Jose, California

Vibration describes oscillation in mechanical systems. Packages, products, pallet loads, vehicles, machinery, and equipment are mechanical systems. They are subjected to vibration whenever there is movement. In packaging applications, vibration can be either desirable or undesirable, although often it is undesirable, because it can damage products. Examples of packaging applications of desirable vibrations are a filling machine and an ultrasonic heat sealer. Filling machines may have a vibratory tray feeder to dispense the product into a package; an ultrasonic heat sealing uses high-frequency mechanical vibrations to produce localized heat that melts the interface between the sealing materials only, without affecting the product or the rest of the package. However, vibrations encountered in vehicles during distribution are always undesirable. This article concentrates on vibrations in distribution only, or those that are undesirable.

Vibration always occurs in distribution because the operations of transport and handling always move goods. It can influence products to the point of causing physical damage or product spoilage. Studies have shown that vibration in vehicles can cause, for example, phase separation to emulsified products, bruising in fruit and vegetables, physical damage in mechanical and electronic products, and damage to labels because of friction (1, 2).

Both external and internal sources originate vehicle vibrations. Examples of external sources include road pavements, rail tracks, and ocean waves; internal sources include rotating parts such as unbalanced wheels and the engine itself (3). In a truck, for example, the wheels of the vehicle pick up the pavement up-and-down oscillations as mechanical vibrations; the suspension and structure of the vehicle transmit these, along with other internal vibrations, to the vehicle floor. Packaged products placed on the vehicle floor will then receive the vibrations.

Vibrations that occur in a vehicle floor may be decomposed in three perpendicular directions: vertical, lateral, and longitudinal. Several studies investigated the directions and locations in vehicles where highest vibration levels occur. On the basis of these studies, it is commonly accepted today that in trucks and semitrailers the highest vibrations occur on the rear axle and in the vertical direction (4, 5). Product damage caused by vibration is more likely to occur if packages are placed over the rear axle in trucks and trailers.

The role of the packaging engineer is to design packages that reduce vibrations. Cushions and other flexible-packaging systems are engineered in such a way that the package attenuates the vibrations that occur in vehicles. No package can completely eliminate vibration. Although still transmitted to products, a package designed for vibration attenuation may virtually eradicate the potential for damage.

FORCED VERSUS FREE VIBRATION

Vibrations are generally classified into two categories: *forced* (when there is a continuous input source) and *free* (input source discontinued). The type of vibration that occurs in packaging machinery is a forced vibration because a source continuously drives the system to vibrate. The vibration that occurs without external excitation is called *free vibration* (6). Both types, free and forced, occur in all vehicles during transport. As an example, the pavement roughness is a source of vibration that forces the wheels of a vehicle to move up and down, generating vibration. If the source of vibration stops, then the system will continually decrease its vibration level (free vibration now) until a full stop, when the energy is totally dissipated. Similarly, when the vehicle hits an obstacle such as a pothole, the vibration will be forced while the obstacle is in contact with the vehicle and free thereafter until the effect of that particular input ends. An example of free vibration occurs when a mass, placed on top of a spring, is pushed down and released, and then vibrates “freely” after its release. Whenever a system is vibrating freely, the movement will decrease and the vibration will eventually cease, because of *damping*. Damping is always present in mechanical systems (7), and it dissipates the energy that keeps the system vibrating.

FREQUENCY AND ACCELERATION

A state of vibration can be characterized by a frequency and an amplitude. The simplest harmonic motion of a mechanical system, such as of a mass placed on a spring that oscillates up and down, is defined by a *frequency* and a *peak acceleration*. The frequency is the number of times a cycle repeats itself in a unit of time, and the peak acceleration is the maximum value of the acceleration in the entire cycle. If a system is vibrating freely, it vibrates at its natural frequency (8). The natural frequency is mainly a function of the mass and the stiffness of the system. The relationship between peak acceleration, maximum displacement from the position of equilibrium, and frequency of a vibrating system is

$$a_{\mathrm{pk}} = \frac{d_{\max}(2\pi f)^2}{g} \tag{1}$$

where a_{pk} = peak acceleration in g (where $1g$ is equal to the gravitational acceleration), $d_{\max}$ = maximum displacement of the oscillating mass from the equilibrium position, f = frequency of oscillation, and g = gravitational acceleration, or $9.81\,\mathrm{m/s^2}$. In applying equation (1) to ideal, or linear systems, the equation shows that the peak acceleration is directly proportional to the maximum displacement and to the square of the frequency of vibration. In other words, if the maximum displacement is doubled, then the peak acceleration will also double (frequency kept constant); if the frequency is doubled (maximum displacement kept constant), the peak acceleration will quadruplicate. Figure 1 shows the relationship represented by equation (1), as applied to a spring-mass system undergoing free vibration. Equation (1) does not take into account the direction of vibration (up or down). In Figure 1, the mass is pushed down with the force F and then released. The situation depicted in Figure 1 does not show the effect of damping. For further information on damping effects on free vibration, the reader may consult Refs. (7–9).

The duration of one cycle of oscillation is shown as the period T. The frequency of oscillation f representing the number of cycles that occur in a unit of time is related to the period by

$$f = \frac{1}{T} \tag{2}$$

For example, if the period $T = 0.2\,\mathrm{s}$, and $d_{\max} = 0.5\,\mathrm{cm}$ ($0.005\,\mathrm{m}$), the frequency is $1/0.2\,\mathrm{s} = 5\,\mathrm{Hz}$ (using equation 2) and $a_{\mathrm{pk}} = 0.005\,\mathrm{m} \cdot (2\pi 5\,\mathrm{Hz})^2 / 9.81\,\mathrm{m/s^2} = 0.5g$ [using equation (1)]. This means that the system is vibrating with a peak acceleration of $0.5g$ and the mass is oscillating at five cycles per second (5 Hz). If the peak acceleration is $0.5g$, the acceleration at any instant will be somewhere between $+0.5g$ and $-0.5g$, inclusive.

When vibration levels in vehicles reach values above $1g$ (acceleration due to gravity) packages will start to bounce. Because packages are seldom attached to the vehicle floor, if the vertical vibration of the vehicle floor is higher than $1g$, the package would not follow the

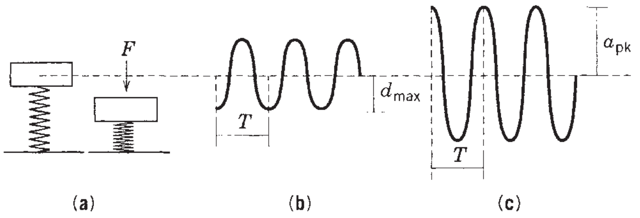

Figure 1. Spring-mass system in free vibration without damping: (**a**) force F causes displacement $d_{\max}$ and releases mass to vibrate freely; (**b**) displacement of mass varying with time; and (**c**) acceleration of mass varying with time.

vehicle floor when it is moving down and will be left suspended in the air momentarily, hitting the floor moments after. This will cause packages to receive impacts rather than only the vibration that occurs at the vehicle floor. Impacts have acceleration levels (G levels) much higher than vibrations (impact accelerations can get up $100g$ very easily) and are much more likely to cause damage to products during distribution.

SINUSOIDAL VERSUS RANDOM VIBRATION

Regarding the mode of vibration, there are two ways it can occur: *sinusoidal* and *random*. The displacement of the mass shown on the spring in Figure 1 characterizes a sinusoidal motion and it can be expressed mathematically as a function of the time only. For example, when time $t = 0$, the displacement is at its minimum, when $t = T/4$, the displacement is *zero*, and when $t = T/2$, the displacement is at its maximum. This pattern repeats itself every interval of duration T. Vibration encountered in distribution such as in a truck when it travels on the road is not like the periodic or sinusoidal vibration of a spring-mass system as represented in Figure 1; rather, it is complex (10). Vehicles vibrate at several frequencies simultaneously, with the displacement, and therefore the acceleration, varying at each instant and never repeating itself again in the same pattern. Figure 2 shows an example of a typical random signal measured on a truck floor.

Because of this complex characteristic, random vibration cannot be described in a deterministic manner, i.e., one cannot write an equation of acceleration versus time to describe this motion. Therefore, a statistical technique, or spectral analysis, is used to study such vibrations and to interpret the motions of the vehicle (9), which are covered in the next sections.

VIBRATION MEASUREMENT AND ANALYSIS

Most packaging-dynamics applications use *accelerometers* for measuring vibration. Accelerometers are sensors that produce an electrical output signal proportional to acceleration. These sensors are rigidly mounted on the surface of a truck floor or package item and are connected to data-recording devices. Manufacturers of accelerometers supply a calibration certificate with each sensor. One important information in this certificate is the *accelerometer sensitivity* (in output units per g). The sensitivity and the output voltage relate to the acceleration by

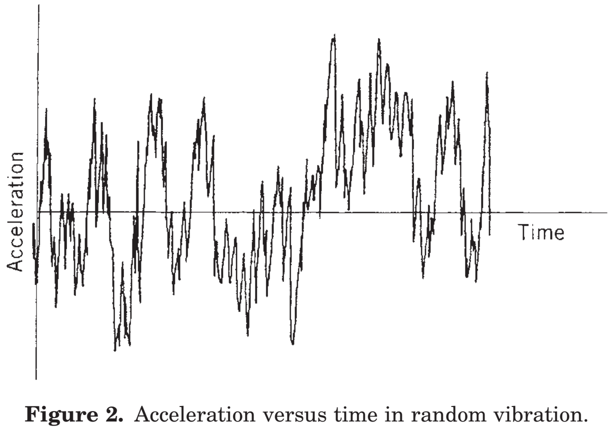

Figure 2. Acceleration versus time in random vibration.

$$\text{Acceleration} = \frac{\text{voltage output}}{\text{sensitivity}} \tag{3}$$

For example, consider an accelerometer with a $10\,\text{mV}/g$ sensitivity. If it senses a vibration with peak amplitude output of $6\,\text{mV}$, the acceleration is $6\,\text{mV}/(10\,\text{mV}/g) = 0.6g$. Accelerometers should be calibrated regularly to ensure accuracy of results acquired (11).

There are two basic ways to measure and store vibration data: *continuous* (or analog) and *intermittent* (or digital). The recording equipment defines the type of measurement and data storage.

In continuous recording, accelerometers are installed in strategic places in the vehicle and vibration data are recorded, without interruption, on a magnetic tape. A voice channel may be used to record a description of the events as they occur, such as the crossing of a rail track, the vehicle speed, or any other occurrence that may be of value for subsequent data analysis and interpretation. This technique requires the continuous presence of an operator, and the instrumentation used can be cumbersome, occupying as much space in a vehicle as one whole pallet load. After stored in the magnetic tapes, the acceleration recordings are transferred to additional instrumentation for analysis, interpretation and use.

Intermittent monitoring has grown substantially in the last few years with the availability of digital recording and storage instrumentation. Intermittent recording uses self-contained recording units to obtain and store acceleration either at predetermined intervals or above a preset triggering level. Recording units used for intermittent monitoring are usually small and contain a real-time clock and a battery to provide the operating power. After stored, the vibration is downloaded to a computer, analyzed, and summarized for subsequent use.

In random-vibration analysis, the complex signal is first decomposed into component sine waves of various frequencies either mathematically using Fourier decomposition (8) or electronically using *bandpass* filters. Whatever the technique used, the complex signal is analyzed in individual component frequency intervals determined by the *bandwidth*. For most packaging applications, the bandwidth has been traditionally set at 1 Hz.The random signal of a vehicle vibration has component sine waves that vary over time but have a zero average, and their peak amplitudes are distributed normally over time so that the Gaussian distribution and all its properties may be used to describe the process.

The acceleration level of any component frequency analyzed is represented by the power density (PD), which is calculated as

$$\text{PD}(f) = \frac{\sum_{i=1}^{n} (\text{Grms}_i)^2}{n \times BW} \tag{4}$$

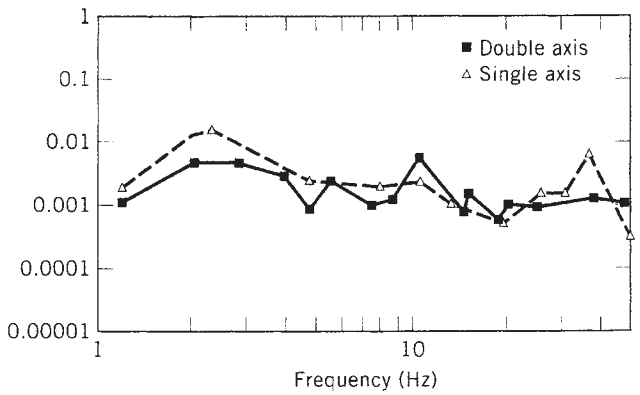

Figure 3. PSDs comparing vibration in single- and double-axle trailers (12). (Originally published in *IPENZ Transactions*.)

where PD(f) = power density at the frequency f, n = number of samples at the frequency f, Grms$_i$ = root mean square acceleration of the ith sample at the frequency f, BW = bandwidth (normalized to 1 Hz).

A power-spectrum density (PSD) represents the results of random-vibration analysis. The PSD is a graphic representation of the vibration intensity at each frequency. As an example, Figure 3 shows the results, in PSD format, of vibrations encountered in semitrailers in urban-area traffic at 60 km/h. This example shows that the single-axle trailer has an overall higher vibration force than the double-axle trailer, except for the frequencies in the range 9–22 Hz (12). Notice that the graphs are in a log–log scale for better clarity at the low-frequency range.

The PSD plots show the component frequencies in the horizontal axis and an indication of their amplitude in the vertical axis. High power-density levels at particular frequencies may indicate problems with the vehicle. This occurs because there are resonant reactions between the vehicle structure and the road surface in this frequency range. For example, for both vehicles represented in Figure 3, there are high power-density levels between 2 and 3 Hz. For the double-axle vehicle, there is another high power-density level at just above 10 Hz; for the single-axle vehicle, a high power density also occurs at 35 Hz.

The PSD plot is interpreted as a "signature" of the random vibration and is used to statistically represent vibrations that occur in vehicles. It can be used to determine the quality of the road or the vehicle, or both. The PSD plots of vehicles are important in the design of protective packages to attenuate how products receive the vibrations that occur in these vehicles. They are also widely used in the execution of laboratory vibration tests to simulate the transportation hazards encountered in these vehicles.

VIBRATION TESTS

In a laboratory, it is typical to perform two types of vibration tests: *sinusoidal* and *random*. Sinusoidal tests are used to identify resonant frequencies of a product, a packaging material, or a complete package. Random-vibration tests are usually performed to test finished-packages prototypes and packaging systems (13) but can also be used to test vibration transmissibility of cushioning materials using a frequency analysis technique (14).

Sinusoidal vibration tests should define (a) the upper and lower frequency of the test, (b) the level to be maintained at each frequency, (c) the rate at which frequency will sweep and whether it is logarithmic or linear, and (d) the number of sweeps or duration of the test. Random-vibration tests should define (a) the PSD to be used, (b) the duration of test at each PSD, and (c) the level sequences of each PSD. Both test types are performed using an electrohydraulic vibration tester mounted on a seismic mass (15), although mechanical shakers are still widely used, mainly for sinusoidal vibration tests with a narrow frequency range.

The purpose of a finished-package vibration test is to recreate in the laboratory the damage potential that the packages would encounter in distribution. These tests determine how effective a package system can be in providing product protection (2). ASTM standard D4169 recommends specific PSDs for each transportation mode (truck and rail). It also recommends that random-vibration tests last 3 h (13), although studies have shown that tests with durations as short as 20 min produce valid results (16). There is generally a tradeoff between test severity and test duration (17). Ideally, a test should be only long enough to impose on the packages events that have the same damage potentials of the events the test is supposed to reproduce.

TERMINOLOGY

The application of mechanical vibrations in packaging involves many terms that may not be familiar to some readers. For a definition of common terms used in vibration, refer to Harris and Crede (18). In addition, more specific terminology on distribution packaging may be found in ASTM standard D996-90a (19).

BIBLIOGRAPHY

1. J. P. Mackson and S. P. Singh, "The Effect of Temperature and Vibration on Emulsion Stability of Mayonnaise in Two Different Package Types." *Packag. Technol. Sci.* **4**, 81–90 (1991).
2. S. P. Singh, G. J. Burgess, and M. Xu, "Bruising of Apples in Four Different Packages Using Simulated Truck Vibration," *Packag. Technol. Sci.* **5**, 145–150 (1992).
3. T. D. Gillespie, *Heavy Truck Ride*, Society of Automotive Engineers, Warrendale, PA, 1985.
4. J. A. Marcondes, S. P. Singh, and G. J. Burgess, "Dynamic Analysis of a Less Than Truckload Shipment," ASME Winter Annual Meeting, paper 88-WA/EEP-17, Chicago, IL, 1988.
5. S. P. Singh, J. R. Antle, and G. J. Burgess, "Comparison Between Lateral, Longitudinal, and Vertical Vibration Levels in Commercial Truck Shipments, *Packag. Technol. Sci.* **5**, 71–75 (1992).
6. W. Weaver, Jr., S. P. Timoshenko, and D. H. Young, *Vibration Problems in Engineering*, Wiley, New York, 1990.

7. R. E. Blake, “Basic Vibration Theory” in C. M. Harris, ed., *Shock and Vibration Handbook*, 3rd edition, McGraw-Hill, New York, 1988.
8. W. T. Thomson, *Theory of Vibration with Applications*, Prentice-Hall, Englewood Cliffs, NJ, 1988.
9. D. E. Newland, *An Introduction to Random Vibrations and Spectral Analysis*, 2nd edition, Longman, New York, 1984.
10. S. P. Singh and D. E. Young, “Measurement and Analysis Techniques Used to Simulate the Shipping Environments,” *ASME* Winter Annual Meeting, paper 88-WA/EEP-18, Chicago, IL, 1988.
11. H. Schueneman, “Calibrating Issues in Packaging Testing,” *Test Eng. Manage.* **57**(2), 6–7 (1995).
12. J. A. Marcondes and W. H. Feather, “Assessment of Vibration Levels on Truck Shipments” in *Trans. Inst. Prof. Eng. New Zealand* (Wellington, NZ) **19**(1), 22–27 (1992).
13. ASTM, *Selected ASTM Standards on Packaging*, 4th edition, ASTM, Philadelphia, PA, 1994.
14. J. A. Marcondes, M. Sek, and V. Roulliard, “Testing Foamed Polymeric Materials for Mechanical Protection of Packaged Goods” in *Anais do 2nd Congresso Brasileiro de Polimeros*, Volume 2, Sao Paulo, Brazil, 1993, pp. 1126–1128.
15. P. J. Vergano and R. F. Testin, “An Inside Look at Seismic Mass Design for Vibration Test System,” *Packag. Technol. Eng.* **3**(4), 38–43 (1994).
16. S. P. Singh and J. A. Marcondes, “Accelerated Lab Simulation of Truck Transport Environment Using Random Vibration,” ASME Winter Annual Meeting, paper 89-WA/EEP-17, San Francisco, CA, 1989.
17. D. Charles, “Derivation of Environment Descriptions and Test Severities from Measured Road Transportation Data,” *J. Inst. Environ. Sci.* 37–42 (Jan./Feb. 1993).
18. C. M. Harris and C. E. Crede, “Introduction to the Handbook” in C. M. Harris, ed., *Shock and Vibration Handbook*, 3rd edition, McGraw-Hill, New York, 1988.
19. ASTM, “D996-90a Standard Terminology of Packaging and Distribution Environments” in *Selected ASTM Standards on Packaging*, 4th edition, ASTM, Philadelphia, PA, 1994.

General References

R. K. Brandenburg and J. J.-L. Lee, *Fundamentals of Packaging Dynamics*, LAB, Skaneatles, NY, 1991.

R. M. Fiedler, *Distribution Packaging Technology*, Institute of Packaging Professionals, Herndon, VA, 1995.

PCB Piezotronics, *Vibration and Shock—Sensor Selection Guide*, PCB Piezotronics, Depew, NY, 1993.

C. E. Crede and J. E. Ruzicka, “Theory of Vibration Isolation” in C. M. Harris, ed., *Shock and Vibration Handbook*, 3rd edition, McGraw-Hill, New York, 1988.

K. Unholtz, “Vibration Testing Machines” in C. M. Harris, ed., *Shock and Vibration Handbook*, 3rd edition, McGraw-Hill, New York, 1988.

J. Curtis, “Concepts in Vibration Data Analysis” in C. M. Harris, ed., *Shock and Vibration Handbook*, 3rd edition, McGraw-Hill, New York, 1988.

W

WAXES AND WAX-COATED FOLDING CARTONS

Harry Kannry
Gary Latto
Dussek-Campbell, Skokie,
Illinois

Updated by Staff

INTRODUCTION

Historically, in the United States, the use of wax-coated folding cartons to provide proper product protection has been a popular concept within the food-packaging industry. A wide assortment of refrigerated and frozen-food entrées have been packaged in this manner since the 1920s.

However, in the late 1950s, a new concept in the manner in which the wax coatings were applied to the folding-carton blank was commercialized. Coupled with the new, commercialized folding-carton waxers, a large number of new wax-based folding-carton formulations emerged. From the 1960s to the present, a large number of new wax-based folding-carton formulation concepts have been successfully commercialized and refined in order to fulfill the ever-changing packaging requirements of the specialty market.

Over the years, wax-based folding carton formulations have improved to provide the following properties:

1. Adequate protection against loss or gain of moisture by the food to the ambient environment
2. Effective bond strengths during heat-seal closing operations on packaging equipment
3. Ability to retain good bonds at low-temperature storage conditions
4. High initial gloss and excellent gloss retention
5. Adequate scuff and abrasion resistance
6. Adequate slip properties for high-speed handling on packaging equipment
7. Good grease resistance
8. Tamper-proof closures before sale, yet open easily at point of use
9. Economical costs commensurate with product protection

Today, a wide variety of specialty foods are now being packaged in wax-coated folding cartons. Wax-blend-coated folding cartons are especially suited for butter, margarine, ice cream, frozen vegetables, frozen pizzas, frozen shrimp, and frozen-dinner entrées, and prepared food specialties, to mention just a few of the limitless applications.

This article focuses on the past, present, and future applications of wax-based coated folding cartons. Waxes, in particular paraffin wax, are used in a great many packaging applications. The folding types include corrugated containers and folding cartons; the flexible types include wrappers, labels, bags, sacks, and pouches; the rigid types include bottles, jars, drums, and tubes. According to the paper and paperboard industry, container board is the largest single grade of paper produced and remains a growing grade. Corrugated containers for shipping manufactured goods make them one of the largest grade forms of packaging.

HOT-MELT WAX CARTON COATERS

From the early 1920s to the late 1950s there were two commercially accepted methods of coating folding carton blanks with wax: (a) the *hot-wax method*, which imparted a limited amount of protection and release to the carton—the wax coating did not enhance the appearance of the carton itself and, therefore, had very little shelf appeal; and (b) the *cold-water waxer*, which gave added surface protection and a reasonably glossy finish that increased the shelf appeal of the carton.

The coating used for both of these methods, wax, was initially nothing more than fully refined paraffin wax. As years went by, it was discovered that additives such as microcrystalline wax and small amounts of low-molecular-weight polyethylene could be added to the fully refined paraffin wax, slightly increasing the appearance and protective functional properties of the carton.

The hot-wax method and the cold-water waxer presented one major problem with the overall wax coating. With the exception of mechanically locked and tuck cartons, and except for those cartons where a dry strip could be left in the waxing operation, the other cartons had to be dewaxed before gluing. The dewaxing operation was time-consuming, very costly, and generated a large volume of wax waste.

In the late 1950s, recognizing the wax coating problem within the folding carton industry, the Oakland Paper Box Company developed the Oakland Hi-Gloss Pattern Coater. The Oakland Hi-Gloss Pattern Coater allowed wax coatings to be applied in any desired pattern, leaving voids in areas to be glued or printed.

The section where the wax is applied has two rubber-covered cylinders: One cylinder coats the underside of a carton blank, while the second waxes the top.

The waxing blanket favored is brass-backed 30–40 durometer neoprene. Like the cutting die or the printing plates, the blanket must be prepared to the needs of a specific carton. Like the cutting die or the printing plate, the blanket will be saved if repeats of the job are anticipated.

A rubber waxing blanket is prepared by stretching an uncut sheet over a cylinder of the same size as the cylinder on which it will be mounted. A template of the specific carton design is cut, and this serves as a pattern for cutting the blanket. Wherever wax is not to be applied, the rubber will be cut away. The result is a pad that is identical to a reverse-printing plate.

With the inception of the Oakland Hi-Gloss Pattern Coater, other machine manufacturers began to market similar wax coaters. In the United States, the majority of the carton coaters in operation are the IPBM GM Carton Coater and the 88-B Carton Center. The two IPBM wax coaters are capable of applying wax coating with viscosities approaching 1000 cP at 300°F (148.9°C).

The IPBM GM Carton Coater has two coating stations. The first station coats the inside (bottom) surface of the carton. The second station coats the outside (top) surface. This arrangement permits the application of different blends on the inside and outside surfaces, if desired. The wax coating weights are controlled by adjustment of the metering roll nip and the reverse or burnishing roll at each coating station. The second coating station is equipped with a weir-type curtain feed to ensure uniform distribution of the wax coating across the applicator roll. This is particularly important in applying high-viscosity wax coatings. Silicone rubber back-up rolls are used to prevent carton blanks sticking to the rolls.

The wax-coated cartons pass through a remelt section consisting of gas-fired infrared heaters. The temperature of the gas-fired infrared heaters is typically 250°F (137.1°C), and these heaters are rated at about 500,000 Btu. This exposure to the heat gives a smoother, more evenly dispersed flow to the wax coating and produces a high-gloss finish.

The wax-coated cartons are then passed through a refrigerated, chilled-water curtain and into a water-immersion tank. The temperature of the chilled water must be carefully controlled within a temperature range of 34–40°F (1.1–4.4°C). The purpose of the chilled water is to facilitate the setting of the wax coating without disturbing the surface. This process also enhances the high-gloss finish. If the chilled water is at a temperature above 40°F (4.4°C), the wax coating does not set properly and will produce a carton with a dull, uneven surface. The position of the heaters and the distance to the water-immersion section can be adjusted to obtain the maximum gloss for the particular wax coating being applied.

The waxed cartons are then passed through a set of squeeze rolls to remove the excess water. The waxed cartons are then deposited onto a slow-speed stacker apron.

The ideal wax-coating weight, per carton side, is approximately 3 lb/1000 ft^2 (14.6 g/m^2).

The machines are usually installed with three channels or lanes that automatically feed the folding carton blanks through the wax coater. Each single lane is capable of waxing 15,000 cartons per hour.

HOT-MELT WAX CARTON COATINGS

In the late 1950s, coupled with the development and commercialization of the "new" folding-carton coaters, new developments and refinements were also taking place in the area of "new" hot-melt wax carton-coating formulations. Specialty wax blends were being researched and developed for exclusive use with the "new" folding-carton coaters. The simple formulations are as follows:

1. Straight, fully refined paraffin-wax blend
2. Fully refined paraffin-wax/microcrystalline wax blend
3. Fully refined paraffin-wax/low molecular weight polyethylene blend

These gave way to sophisticated blends of carefully selected petroleum-derived waxes with carefully selected wax additives. Because of the significant changes made in the area of folding-carton coaters, a new era in formulating wax-based coatings for this specialty packaging industry began.

In early 1960, another series of products became commercially available that created an entirely new concept in hot-melt wax-based coatings. This new series of products were termed *copolymers* and consisted of various percentages of ethylene and vinyl acetate, or simply EVA. Other wax additives that became commercially available around the time of the EVA copolymers were polyterpene resins, stabilized ester gums, and a wide product diversification of low-molecular-weight and high-molecular-weight polyethylenes. The commercialization of these new wax additives gave compounders the tools to manufacture an almost limitless number of combinations or formulations of hot-melt wax-based folding carton coatings.

On the basis of the requirements of the folding carton industry, hot-melt wax-based folding-carton coatings are classified into the following two categories:

1. Non-heat-sealable folding-carton waxes
2. Heat-sealable folding-carton waxes

Non-heat-sealable folding-carton waxes are usually applied in a defined pattern onto the folding-carton blank, leaving unwaxed areas where a hot-meal adhesive (HMA) is applied to seal the folding carton closed. The wax coating is applied to both the outside (printed side) and the inside (unprinted side) of the folding carton.

Heat-sealable folding-carton waxes are applied onto the entire surface area of the folding carton blank, and they will seal the folding carton *without* the use of a HMA. The wax coating is applied to both the outside (printed side) and the inside (unprinted side of the folding carton). The use of a heat-sealable folding-carton coating is advantageous because the gluing operation is eliminated.

As the folding-carton industry developed, it became apparent that only four wax-based folding-carton coatings were necessary to fulfill the requirements of the industry. The wax-based coating product line consisted of the following:

1. Non-heat-sealable folding-carton waxes
    a. One economical coating
    b. One general-purpose coating
    c. One heavy-duty coating

2. Heat-sealable folding-carton wax
    a. One premium heat-sealable coating

The selection of the proper folding carton coating depends on the physical specifications of the formulation as well as the functional properties that the formulation must impart to the folding carton. Functional properties such as gloss, creased vapor barrier, grease resistance, scuff resistance, freezer-burn resistance, and heat sealability are some of the points to be considered in the section of the proper folding-carton coating. In most instances, the folding-carton coating must be nonflaking, exhibit no ruboff, and exhibit a high antiblock characteristic. These three properties are important when the waxed folding carton is processed through the folder/gluer. The wax coating cannot build up on the runners of the folder/gluer. When the wax coating builds up on the runners of the folder/gluer, subsequent waxed folding cartons stick and jam on the runners. The folder/gluer must then be shut down and cleaned (see also Sealing, heat).

The economical non-heat-sealable folding-carton coating provides minimal functional properties. The economical formulation is used in applications of generic folding cartons where minimum functional properties are required and the low cost of the wax coating is an important consideration. With a hot-melt wax carton coater containing two separate wax-coating stations, the economical formulation can be used on the inside (unprinted) of the folding carton, while the general-purpose formulation or the heavy-duty formulation can be used on the outside (printed) of the folding carton. This procedure is used for monetary consideration.

The general-purpose non-heat-sealable folding-carton coating offers improved functional properties over the economical coating. The general-purpose coating may be used on the outside (printed) area of the folding carton as well as the inside (unprinted) area of the folding carton.

The heavy-duty non-heat-sealable folding-carton coating imparts the optimum appearance, protection, and functional properties of the non-heat-sealable coatings. The heavy-duty coating may be used on the outside (printed) area of the folding carton as well as the inside (unprinted) area of the folding carton.

The premium heat-sealable folding-carton coating imparts the optimum appearance, protection, and functional properties to the folding and will seal the folding carton closed without the use of a HMA. This product will give a fiber-tearing seal over a wide range of sealing temperatures.

An additional consideration for all four products is that all ingredients and final products must fully comply with FDA (Federal Drug Administration) regulation as suitable for use in food packaging. The regulation cited most often is Paragraph 21, *CFR* 176.170 for "components of paper and paper-board in contact with aqueous and fatty foods."

With the new generation of hot-melt wax-based coatings and the commercialization of the new generation of hot-melt carton coaters, the folding-carton industry was well on its way to establishing itself as a strong specialty market within the food-package industry.

CURRENT USE

Many changes have occurred in the folding-carton industry since its modern conception in the early 1960s. A newer variety of boardstock required newer blends of wax coatings. At present, the most widely used of the petroleum waxes is paraffin wax, also called macrocrystalline wax. More than 50 companies produce petroluem waxes worldwide (1). It is extremely unreactive at normal temperatures. It remains cost-effective as a moisture and gas barrier. It can also be blended with microcrystalline wax or combined with polyethylene or ethyl vinyl acetate (EVA) to improve performance. The use of refined grades of petroleum wax are regulated by the FDA (21 *CFR* 172.886 and 21 *CFR* 178.3710) (2).

Petroleum waxes are now used to coat corrugated board as well. The most common methods used for applying wax are saturating or cascading and curtain coating. In saturating or cascading, a thick layer of wax is flushed or sprayed onto the finished board. The board will pick up 40–50% of its weight in wax. The wax is normally low melting. In curtain coating, the corrugated board is allowed to pass horizonatally through falling wax. The coating formulations contain paraffin wax, microcrystalline wax, and additves such as EVA copolymers, tackifier resins, and antioxidants. EVA increases the viscosity to produce a stable curtain. Tackifiers increase flexibility and antioxidants prevent the formation of odor and discoloration (3).

Folding cartons are made from heavy paper or papeboard. The carton is printed, folded into the basic carton shape, sealed and glued, and shipped to the user. The carton usually goes into an automatic filling line where it is popped open and filled with product. Waxing allows the board to sustain ply separation without splitting or failing when bent back.

FUTURE OUTLOOK

The current awareness of the environmental impact of products has consumers and manufacturers re-evaluating their existing materials. This is true for the packaging industry because much of its end product requires disposal.

Petroleum waxes have many properties that make it a barrier to gases and vapors. This is very desirable for the actual packaging, but makes it very difficult to recycle. Closed-loop recycling of paper products is called repulping. Packaging containing petroleum waxes requires special handling at recycling mills. The most severe problem is that the waxes combine with other contaminants, and clog the wires and felts of the paper machine, forming "stickies." Waxes can also delay the defibering in the pulper. Most existing plants are not equipped to remove the contaminants (4).

The International Group, Inc., a world leader in refining and marketing of petroleum waxes, is working with paper and equipment suppliers to develop new products that improve pulpability and to modify technologies to better handle contaminants (5). The industry is now developing wax alternatives, many of which have become commercial.

BIBLIOGRAPHY

H. Kannry and G. Latto, "Waxes" in A. J. Brody and K. S. Marsh, eds., *The Wiley Encyclopedia of Packing Technology*, 2nd edition, Wiley, Hoboken, NJ, 1997, pp. 962–964.

Cited Publications

1. M. Malveda, M. Blagoev, and M Yoneyama, "Waxes" in *Chemical Economics Handbook,* SRI Consulting, Menlo Park, CA, 2006.
2. C. Leray, "Waxes" in the *Kirk–Othmer Encyclopedia of Chemical Technology*, Vol. 26, 5th edition, Wiley, Hoboken, NJ, 2007, pp. 203–226.
3. "Corrugated Waxes", The International Group, Inc., 2006, www.igiwax.com.
4. "Environmental Awareness", The International Group, Inc., 2006, www.igiwax.com/.
5. "Wax Alternatives," Corrugated Packaging, www.corrugated.org/, accessed April 2008.

General References

I. N. Davie, "Compostability of Petroleum Wax Based Coatings," *TAPPI J.* **February** 167–170 (1993).

R. J. Hamilton, ed., *Waxes: Chemistry, Molecular Biology, and* Function, Oily Press, Dublin, 1995.

WRAPPING MACHINERY, STRETCH-FILM

Edwin Ho
OSI Industries
Lisle, Illinois

HISTORICAL OVERVIEW

The stretch-wrapper industry is over 30 years old in 2008. In 1976 there were only four or five manufacturers producing a wide-web model used to wrap standard-height pallet loads with a large 60-in. roll of stretch film. Soon after that the demand to wrap variable pallet load heights produced the *spiral* model, which used a smaller 20-in. roll of stretch film. Unlike the large roll of film, which was stationary when wrapping the entire pallet load, the smaller 20-in. roll traveled up and down on a motorized carriage, wrapping the entire load in a crisscross fashion. The spiral wrapper offered the primary advantage of wrapping a wide variety of load heights at minimal cost and dramatically reduced the use of the wideweb model.

Today the spiral wrapper (Figure 1), in both semiautomatic and fully automatic formats, represents approximately 90% of all wrapper production. Wrapper manufacturers in the United States now number over 20, ranging from small producers of lower-cost models to major producers offering a complete line of wrapper models to accommodate virtually every stretch-wrap application known.

THE DEMAND FOR STRETCH WRAPPERS

Prior to the energy crisis of 1974, the use of *shrink* film to unitize pallet loads of product was an increasingly popular packaging medium. The costly and excessive use of heat energy (gas, electric, or propane) to shrink film, however, along with the rising cost/availability of shrink resins, placed industry of all types in a cost-prohibitive situation.

Another unitizing method, using strapping (steel, nylon, polyethylene, or polypropylene) to unitize pallet loads, was recognized as labor-intensive; and an average pallet load could take up to 7 min to strap, depending on the nature of the product and the acceptable strapping pattern desired.

Still other unitizing mediums such as pressure-sensitive tape, twine, or spot adhesives did not provide inherent protection from the elements and would tend to loosen while in transit.

Stretch film offered a lower cost advantage of being applied by equipment that used only "on/off" electricity as a source of power and could be applied by a semiautomatic stretch wrapper. Significantly less labor time was involved and an average size product load could be wrapped in less than 2 min. As a result, many of the initial products

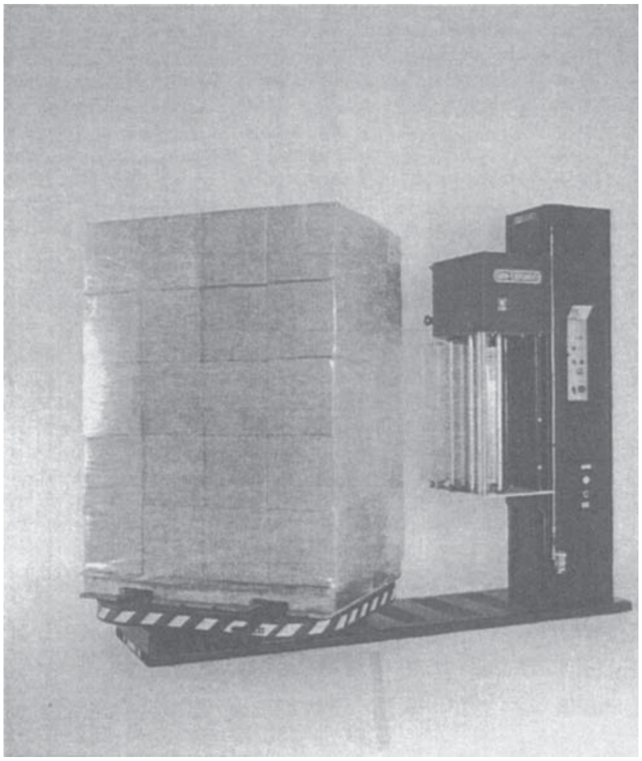

Figure 1. A semiautomatic, spiral wrapper (IPM 55UTS30F) equipped with Uni-Tension power prestretch. For unitizing up to 35 pallet loads per hour.

stretch-wrapped were packaged in multiwall paper bags, polyethylene bags, or cartons. The following is a list of very early stretch film product applications:

Product	Shipped in
Kitty (cat) litter	Multiwall paper bags
Dog and cat food	Multiwall paper bags and cartons
Detergent	Corrugated cartons
Chemicals	Multiwall paper bags and steel drums
Printed forms	Corrugated cartons
Injection-molded bottles	Corrugated cartons
Mortar mix	Multiwall paper bags
Concrete block and brick	Strapped (steel)
Potting soil and mulch	Polyethylene bags
Seed	Polyethylene bags
Canned and jarred food	Corrugated cartons
Liquids in polyethylene/ glass bottles	Corrugated cartons or trays

It should be noted that, even in 30 years later, these products are still being shipped on pallets and in some cases corrugated slip sheet via the stretch-wrap medium. Thus, the demand for stretch film continues to grow with over 2.2 billion pounds being produced annually in the United States. The demand for stretch film is projected to rise 4.7% annually for the next few years. It is estimated that more than 40,000 stretch wrappers are sold annually in the United States as this type of machinery continues to replace conventional packaging methods. In addition, virtually every type of product shipped today in a carton, paper/polyethylene bags, drums, or polyethylene containers is being stretch-wrapped. Products having been considered marginal as a stretch-wrap application are now being packaged or unitized with stretch film. Some of the once considered marginal product applications are as follows:

Aluminum/steel coils
Tires
Engine castings
Expanded styrofoam sheets
Doors
Coils of copper tubing
Batteries
Signatures
Perishable foods (produce and meat)
Windows
Furniture
File cabinets
Frozen fish in ice
Frozen foods
Recycled rubber in polyethylene bags
Hazardous chemicals and powders

PRESTRETCHING FILM

Wrapping a pallet product load with stretch film is generally accomplished by first placing the load on the turntable of the stretch wrapper. The turntable is activated, and rotates and draws film from the supply roll. Originally, film stretch was created by the film roll being gradually retarded from turning while the load pulled the film from the roll. Retarding the film roll was affected by an electromagnetic brake fixed to the film core or through a series of rollers bars. The effective maximum stretch, however, was no more than 120% and in most cases averaged 50–60%. Higher percentages of stretch would generally cause product cartons to crush and could even pull the load from the turntable unless otherwise held in place by an optional top compression platen (electric or air-operated).

Prestretching film, however, became instantly popular in the late 1970s as moderate-to high-volume shippers took advantage of the higher film yields offered by improved stretch films coming into the marketplace. These improved films utilized linear low-density polyethylene (LLDPE) resins either alone or combined with ethyl vinyl acetate (EVA) to enhance puncture resistance, reduce tear propagation, and extend film yield up to 400%. The prestretch method of stretching such films was found to reduce stretch film cost per pallet load by 20–45% as sophisticated prestretch machine assemblies became part of an upscale trend in stretch wrappers in the 1980s.

Unlike a stretch wrapper equipped with brake tension, a prestretch assembly stretches the film at the machine by routing the stretch film between two powered rollers prior to its application to the load. Because the two powered rollers are moving mechanically or electrically at different speeds, the film stretches between the rollers.

The percentage of stretch that can be attained through a fixed-ratio or variable-prestretch assembly can reach 300% with the appropriate film quality and gauge. Common or the most desirable level of prestretch is 200–225%, which allows for maximum film recovery (holding force) at an economical level of film usage. Excessive prestretch can cause stretch film to thin, reduce puncture/abrasive resistance, and diminish the “cling” or self-adhering property of the film. Without a reasonable amount of “cling,” the trailing segment of the film wrap (pressed against the side of the load at the end of the wrap cycle) can release itself allowing the wrapped load to partially unwrap.

Another advantage of prestretch is that most manufacturers have a method to apply tension of the film to the load immediately after the prestretch process occurs. Generally, an adjustable spring *or* air operated dancer bar is utilized to regulate film tension to the product load. One such system is the patented IPM Uni-Tension system (Figure 2), which provides constant and consistent film tension (adjustable) to the product load. As a result, many product loads, which could normally *not* be stretch-wrapped without the use of a top stabilizer platen, *can be wrapped* with power prestretch. Examples of these types of loads are as follows:

Mixed-Product Loads
Partial-pallet loads
Tall-pallet loads
Empty drums
Empty plastic bottles
Load weights of 150–500 lb

Prestretch is preferred by many volume shippers because it reduces the amount of stretch film received by their customers. Although stretch film *is* recyclable, prestretch minimizes the film disposal process.

WRAPPER MODELS AVAILABLE

The stretch-wrapper industry has come a long way since the original *wide-web* machine was introduced. The single-turntable wide-web machine (using a 45- to 80-in. film roll size) has been expanded to at least several additional models to include wide web prestretch. The *spiral* wrapper model has evolved into multiple models designed to accommodate a wide variety of applications and user preferences. The following is a list of the most popular models currently available—also noted is the average production rate for which that model would be applicable:

Wrapper Model	Production Rate
Hand wrapper	0–10 pallets/day
Power turntable with hand wrapper	0–10 pallets/day
Powered-turntable machine with manually operated film carriage (has mechanical powered carriage)	≤20 pallets/day
Semiautomatic, powered-turntable machine with adjustable programmable controls for number of wraps, speeds of turntable, film carriage, etc., and brake tension	≤35 pallets/h
Semiautomatic, powered-turntable machine with adjustable programmable controls for number of wraps, speeds of turntable, film carriage, etc., and fixed-ratio powered prestretch	≤35 pallets/h

(*Note:* These powered-turntable machines are available in a high-platform turntable design (for forklift use only) or a low-profile design with a loading ramp for hand/electric pallet jack and forklift use. These machines are also available in wide-web or spiral-type models.).

The machine models listed above continue to withstand the test of time, being the most popular and often manufactured with the following most common options to enhance the stretch-wrapping process, increase the production rate, or improve operator efficiency:

- *Photoelectric height sensor* (*for semiautomatic spiral models*)—located on the film carriage to automatically seek the top of the pallet load, halt the film carriage, and permit the top wrap cycle to occur.

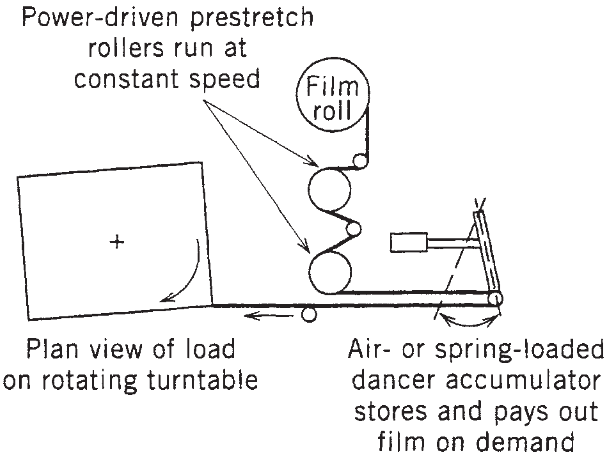

Figure 2. Powered prestretch.

- *Mast extension* to permit pallet loads in excess of 85 in. in height to be wrapped.
- *Top-compression platen* (*electric or air-operated*)—exerts an adjustable amount of stabilizing pressure on the top of a lightweight or unstable product load.
- *Additional turntable (dual-turntable model)*—increases production rate by 33%.
- *Conveyorized turntable* (*gravity roller*)—for in-line capability; that is, machine is installed into existing or new gravity roller production line.
- *Pit mount*—machine is installed into the floor with turntable virtually flush with floor; enhances use of pallet jacks.
- *Scale*—5,000- to 10,000-lb capacity scale integrated with and under the wrapper turntable eliminates double handling of pallet loads.

FULLY AUTOMATIC CONVEYORIZED MODELS

Shippers with moderate to high production (15–85 pallets/h) have generated an increased demand for fully automatic stretch wrappers. The most popular fully automatic has a powered conveyorized turntable for in-line powered-conveyor systems or for multiple forklift operations. Unlike a semiautomatic wrapper, the fully automatic wrapper eliminates the operator, who necessarily would first attach the stretch film to the load and then press a START button. At the completion of the wrap cycle, the operator would cut the film and adhere the trailing edge of the film to the side of the load. The automatic, however, operates through an electric programmable logic controller (or microprocessor) and a series of electronic photoelectric load sensors. The stretch film is held in a mechanical clamp between load wrap cycles and is cut and brush-wiped onto the pallet load automatically at the completion of the wrap cycle.

A fully automatic wrapper equipped with a power infeed and discharge conveyor can be integrated with an automatic load palletizer (which feeds loads to the wrapper). This same system can be used effectively by having a forklift operator set a load on the power infeed conveyor and then activate that conveyor with an overhead remote pendant control. As that load would feed into the wrapper module, the forklift operator would drive over to the discharge conveyor section to remove a completely wrapped load and place it into storage or a shipping vehicle. Automatics are generally equipped with a prestretch assembly for maximum utilization of the stretch film.

Common *optional* equipment to enhance higher-speed, fully automatic systems are as follows:

- Top-compression platen exerts an adjustable amount of stabilizing pressure on the top of a lightweight or unstable product load.
- Automatic top-sheet dispenser that automatically places a 2- to 3-mil polyethylene top sheet on top of the pallet load prior to the load being conveyed to the wrapping module. A top sheet is usually desirable to prevent the elements from damaging the product.
- The 90° index turntable is used primarily to direct the discharge of the pallet load 90° from which it was accepted onto the machine. This option is usually desired if there is a floor-space restriction.
- Mast extension to permit pallet loads in excess of 85 in. in height to be wrapped.

OTHER WRAPPER MODELS

In recent years, *new* stretch-wrapper designs have been created by different manufacturers to accommodate either the end user's specific product application or existing packaging line. One such model is the increasingly popular *overhead rotary-arm*-type stretch wrapper (Figure 3). With this model, the product load does not rotate on a turntable. The load sits on the floor or on conveyor, and the roll of stretch film travels on the overhead arm *around the load* wrapping it in a spiral fashion. The film stretch delivery system can be either the brake tension type or the powered prestretch type.

The overhead rotary-arm-type machine is advantageous for wrapping pallet loads when

- Loads are extremely heavy.
- The product on the pallet is subject to damage if rotated.
- Loads are unstable and not easily moved by forklift, pallet jack, or conveyor.
- Washdown is required—that is for use in poultry plants or facilities where the machinery and general work areas must be washed down periodically for sanitation reasons.

The overhead-arm-type machine is currently manufactured as a wall- or floor-mounted semiautomatic or can be upgraded and incorporated into a fully automatic conveyorized system for high-production use.

The *semiautomatic robotic wrapper* is a battery-operated, wheeled vehicle with a vertical mast and film-stretch delivery system. This wrapper is placed next to a product load and, when activated, travels around the perimeter of the load while the film carriage travels up and down stretch wrapping the load. A sensing device signals the wrapper to turn as it senses the corner of the load. This type of wrapper has been used to wrap longer-than-average product loads and requires ample floor space in which to operate.

Orbit stretch wrapping has become a popular method to stretch wrap large flat panels such as office dividers, locker-room partitions, and so on, in which the panel is conveyorized through a large ringlike assembly and a 10- to 30-in. roll of stretch film travels in a vertical plane with a circular motion around the entire panel wrapping it as it moves through the ring on the conveyor.

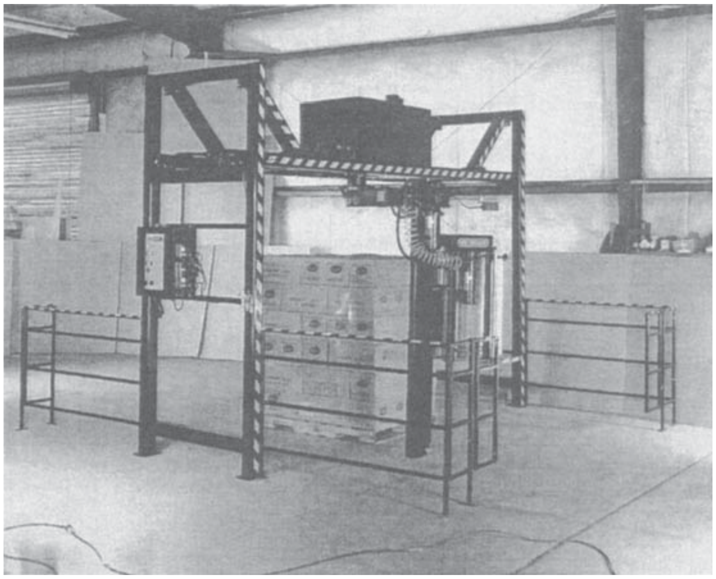

Figure 3. A semiautomatic overhead rotary-arm-type stretch wrapper.

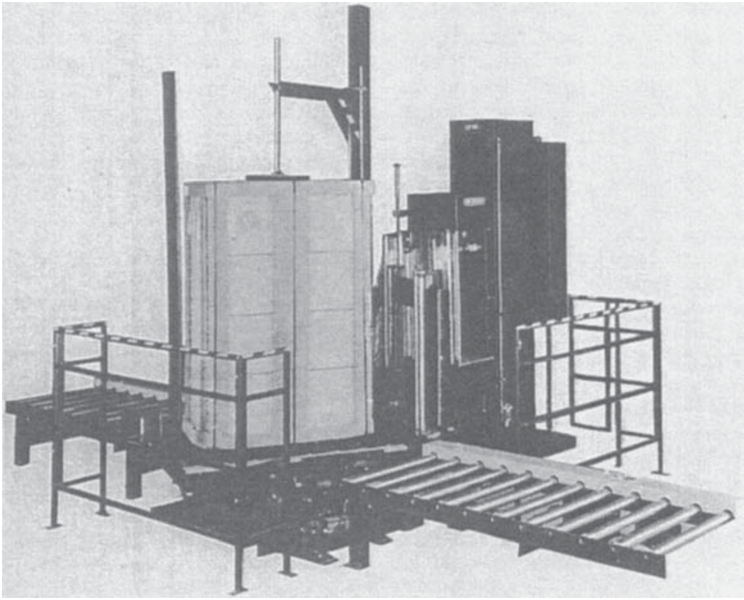

Figure 4. A down-sized fully automatic (IPM Bantam 88) wrapping F-Pack prepared file cabinets.

The orbital wrapper is also advantageous for wrapping long products either singularly or in bundles. Examples of such products would be rolls of carpet, PVC pipe, fencing, and shovel or rake handles. The orbital wrapper is available in several "ring" sizes to accommodate even small bundling applications such as a stack of blue jeans, bags of dog food, and like products. Orbital wrappers are largely manufactured as automatic equipment, although semiautomatic and manually operated orbital wrappers are available for low-production and individual-product-size applications.

Wrappers have been designed *for* stretch wrapping *doors, windows*, and similar products in the vertical plane. In most cases, the stretch wrapper of choice is a standard semiautomatic, low-profile model with power prestretch for maximum film economy. Wrapping doors on a pallet, however, requires an air-loaded clamp that locks the doors together at the very top of the load. Wrapping windows requires a top-compression stabilizer with an adjustable clamp and a similar adjustable clamp mounted on the turntable. Both clamps hold the window stationary during the wrap process.

Explosion-proof wrappers are required for many hazardous materials, flour, and similar powder-type products packaged in cartons, multiwall paper, or polyethylene bags. The manufacturing environment for such products demands that the stretch wrapper be designed as spark-free as possible. Static eliminators (for the stretch film) are often used on this type of equipment.

Produce and *perishable* wrappers have been designed to use stretchable and rigid stretch net that allows the wrapped load to "breathe." Produce items such as bananas, melons, peppers, and tomatoes are shipped in ventilated cartons so that damage causing gases generated from certain fruits and vegetables can escape from the carton during the cooling and shipping process.

Stretch net (used in the same way as stretch film on the wrapper) wraps the produce load securely and permits the ventilation to occur. Net, however, cannot be prestretched, and actual stretch is limited to 5–35%.

The product wrapper itself is usually a semiautomatic wrapper and is fitted with a brake-tension delivery system. This same wrap method is being used for perishable products such as cartoned meat, poultry, yogurt, and frozen foods.

A recent innovation to the wrapper is the *roper / bander*, an option that allows somewhat less expensive stretch *film* to be reduced in web size (from 20 to 3 in.) by having the film travel through a mechanical fixture as it is being dispensed from the feed roll under tension to the product load. Thus, a 3-in. rope (or band) of film is created that unitizes the load in the standard up/down, crisscross fashion yet does not inhibit the ventilation process. A standard brake tension system or a power prestretch system can be utilized with the roper/bander unitizing method.

Luggage wrappers have recently been designed to stretchwrap standard luggage at airport departure terminals. The stretch wrap acts as a theft deterrent as well as a preventive measure for tightening airport security.

FUTURE WRAPPING SYSTEM

The appearance and performance of the future stretch wrapper will likely be driven by specific product package designs as many regions of the world further their concept of source reduction:

Less packaging materials per package
Less actual labor involved per package
Less time to prepare the package
Less packaging materials to recycle
Less materials going to landfill
Less factory floor space consumed by packaging material inventory

Packaging engineers are working closely with stretch-wrapper manufacturers to marry the two concepts of source reduction in packaging and the stretch-wrapper design.

A primary example would be the development of the "*clear-view*" package (acronym for *F-Pack*) for products such as file cabinets, bedroom furniture, entertainment centers, and armoires. Driven by consignee resistance to the disposal problem of large corrugated cartons along with the increasing cost of corrugated cartons, product manufacturers have had to develop "abbreviated" package designs.

The F-Pack package design eliminates the use of the corrugated carton and replaces it with a stretch-wrap package utilizing protective corrugated corner posts and corrugated caps and trays. Polyethylene strapping is also used in some cases.

For low-volume producers, the standard semiautomatic stretch wrapper has been modified to accept and wrap F-Pack type packages. For moderate- to high-volume manufacturers, fully automatic stretch-wrapper models have been *down-sized* and significantly modified to accept the high-production volume and the specific individual package design. A down-sized Bantam 88, conveyorized fully automatic stretch wrapper (Figure 4) can be placed in-line to accept F-Pack prepared products like file cabinets. It is likely that additional products such as small appliances, air-conditioning units, and heat pumps will also shed their corrugated carton in favor of a clear-view package in the future.

Material improvments in terms of strength and stretch percentages will stimulate gains as greater stretchability and lower costs by enabling pallets and other products to be wrapped with less film. Stretch hoods will exhibit the fastest growth of all product categories due to their significant higher throughput compared to conventional unitization methods. In recent years, the stretch hood wrapping system (Cover-Pal 6000) manufactured by Arpack using Thimon patented technology offered reliable five-sided stretch wrapping of pallet load. Their machine covers pallet-held products on the top and sides, allowing for pallet load storage with strong environmental protection against dust, water, and shipping damage that occur during storage and transportaion. The packaging system is ideal for products for home centers, construction sites, and freight yards.

The Arpack COVER-PAL 6000® STRETCH, a stretch hood pallet covering system, offers numerous advantages over standard pallet wrapping, including:

- Higher production capacity—wraps pallets at speeds up to 120 pallets per hour with less film changeovers.
- Brand messaging can be printed directly onto the film, enhancing product recognition.
- Transparent pallet cover enables labels to be read without removing the film.
- Ensures stable pallet loads for transportation.
- Unlike stretch film used by conventional stretch wrap equipment, stretch hood films are recyclable.

A stretch hood pallet covering system can be a viable replacement of conventional stretch-wrapping machine for the specific product groups using corrugated containers in various industries in the near future. The challenge for the success is to make sure that the cost per pallet load offered by the stretch hood method is more cost competitive in terms of film material usage, capital investment, and operation efficiency compared to conventional unitization methods.

A few major stretch-wrapping equipment suppliers to the United States market are Arpac, Lantech, ITW Mima, and Seal-O-matic.

SUMMARY

The stretch wrapper continues to be the unitizing medium of choice for (a) palletized product loads, (b) slip-sheeted product loads, and (c) for products having new, lower-cost package designs. The use of stretch film (particularly prestretched) and stretch net offers significant savings for the shipper, carrier, and consignee. New stretch-film resins such as *metallocene* may enhance prestretch film yield and allow "down-gauging" for many applications.

Stretch-wrapper design and performance function should continue to be refined in the areas of manufacturing cost, prestretch assemblies, and ergonomics, resulting in additional benefits to the end user. Stretch hoods will exhibit the fastest growth of all product categories due to their significant higher throughput compared to conventional unitization methods.

BIBLIOGRAPHY

R. F. Nunes,"Wrapping Machinery, Stretch-Film" in A. J. Brody and K. S. Marsh, *The Wiley Encyclopedia of Packaging*, 2nd edition, Wiley, New York, 1997, pp. 973–978.

General References

NMFC F-Pack numbers: 132-F, 138-F, 141-F, 142-F, 145-F, 146-F, 2418, 2512, 2514 Furniture Packaging; published by Bohman Industrial Traffic Consultants, Inc. P.O. Box 889, Gardner, MA 01440.

"A Change to See-Through Packaging," *Inst. Packag. Prof. Techn. J.* (Spring issue, 1991). (IPP address: 481 Carlisle Drive, Herndon, VA 22070).

National Motor Freight Classification Rule 180, effective January 21, 1995 (National Motor Freight Traffic Association, Inc., 2200 Mill Road, Alexandria, VA 22314).

R. F. Nunes (Director of Marketing & Sales, International Packaging Machines, Inc.), New Developments in Stretch Wrapping of Case Goods, Furniture and Small Appliances; Including High Speed Automated Wrapping," International Safe Transit Association (ISTA), 1995 (paper on source reduction).

Arpac Group, Cover-Pal 6000 Stretch—Stretch Hood Cover System, Schiller Park, IL.

Food Master, equipment, supplies & services, Food Engineering Network, Cahners, published annually.

"Stretch and Shrink Film," Freedonia Group, 1997, Rockville, MD.

Appendix A

CONVERSION FACTORS, ABBREVIATIONS, AND UNIT SYMBOLS

Selected SI Unite (Adopted 1960)

Quantity	*Unit*	*Symbol*	*Acceptable equivalent*
BASE UNITS			
length	meter[†]	m	
mass[‡]	kilogram	kg	
time	second	s	
electric current	ampere	A	
thermodynamic temperatures[§]	kelvin	K	
DERIVED UNITS AND OTHER ACCEPTABLE UNITS			
*absorbed dose	gray	Gy	J/kg
acceleration	meters per second squared	$\mathrm{m/s^2}$	
*activity (of ionizing radiation source)	becquerel	Bq	I/s
area	square kilometer	$\mathrm{km^2}$	
	square hectometer	$\mathrm{hm^2}$	ha (hectare)
	square meter	$\mathrm{m^2}$	
density, mass density	kilograms per cubic meter	$\mathrm{kg/m^3}$	g/L; $\mathrm{mg/cm^3}$
*electric potential, potential difference, electromotive force	volt	V	W/A
*electric resistance	ohm	Ω	V/A
*energy, work, quantity of heat	megajoule	MJ	
	kilojoule	kJ	
	joule	J	N · m
	electronvolt[x]	eV[x]	
	kilowatthour[x]	kW · h[x]	
*force	kilonewton	kN	
	newton	N	$\mathrm{kg \cdot m/s^2}$
*frequency	megahertz	MHz	
	hertz	Hz	1/s
heat capacity, entropy	joules per kelvin	J/K	
heat capacity (specific), specific entropy	joules per kilogram kelvin	J/(kg · K)	
heat-transfer coefficient	watts per square meter kelvin	$\mathrm{W/(m^2 \cdot K)}$	
linear density	kilograms per meter	kg/m	
magnetic field strength	amperes per meter	A/m	
moment of force, torque	newton-meter	N · m	
momentum	kilogram-meters per second	kg · m/s	
*power, heat flow rate,	kilowatt	kW	
radiant flux	watt	W	J/s
power density, heat-flux density, irradiance	watts per square meter	$\mathrm{W/m^2}$	
*pressure, stress	megapascal	MPa	
	kilopascal	kPa	
	pascal	Pa	
sound level	decibel	dB	
specific energy	joules per kilogram	J/kg	
specific volume	cubic meters per kilogram	$\mathrm{m^3/kg}$	
surface tension	newtons per meter	N/m	
thermal conductivity	watts per meter kelvin	W/(m · K)	

velocity	meters per second	m/s	
	kilometers per hour	km/h	
viscosity, dynamic	pascal-second	$\mathrm{Pa \cdot s}$	
	millipascal-second	$\mathrm{mPa \cdot s}$	
volume	cubic meter	$\mathrm{m^3}$	
	cubic decimeter	$\mathrm{dm^3}$	L (liter)
	cubic centimeter	$\mathrm{cm^3}$	mL

In addition, there are 16 prefixes used to indicate order of magnitude, as follows:

Multiplication factor	*Prefix*	*Symbol*	*Note*
10^{18}	exa	E	
10^{15}	peta	P	
10^{12}	tera	T	
10^{9}	giga	G	
10^{6}	mega	M	
10^{3}	kilo	k	
10^{2}	hecto	h[a]	
10	deka	da[a]	[a] Although hecto, deka, deci, and centi are SI prefixes, their use should be avoided except for SI unit-multiples for area and volume and nontechnical use of centimeter, as for body and clothing measurement.
10^{-1}	deci	d[a]	
10^{-2}	centi	c[a]	
10^{-3}	milli	m	
10^{-6}	micro	μ	
10^{-9}	nano	n	
10^{-12}	pico	p	
10^{-15}	femto	f	
10^{-18}	atto	a	

*The asterisk denotes these unite having special names and symbols.

†The spellings “metre” and “litre” are preferred by ASTM; however, “-er” is used in the *Encyclopedia*.

‡“Weight” is the commonly need term for “mass.”

§Wide use is made of “Celsius temperature” (t) defined by $t = T - T_0$ where T is the thermodynamic temperature, expressed in kelvins, and $T_0 = 273.15$ by definition. A temperature interval may be expressed in degrees Celsius as well as in kelvins.

ˣThis non-SI unit is recognised by the CIPM as having to be retained because of practical importance or use in specialised fields.

Factors For Conversion to SI Units

To convert from	*To*	*Multiply by*
acre	square meter ($\mathrm{m^2}$)	4.047×10^{3}
angstrom	meter (m)	1.0×10^{-10}[†]
atmosphere	pascal (Pa)	1.013×10^{5}
bar	pascal (Pa)	1.0×10^{5}
barn	square meter ($\mathrm{m^2}$)	1.0×10^{-28}[†]
barrel (42 U.S. liquid gallons)	cubic meter ($\mathrm{m^3}$)	0.1590
Btu(thermochemical)	joule (J)	1.054×10^{3}
bushel	cubic meter ($\mathrm{m^3}$)	3.524×10^{-2}
calorie (thermochemical)	joule (J)	4.184[†]
centipoise	pascal-second ($\mathrm{Pa \cdot s}$)	1.0×10^{-3}
cfm(cubic feet per minute)	cubic meters per second ($\mathrm{m^3/s}$)	4.72×10^{-4}
cubic inch	cubic meter ($\mathrm{m^3}$)	1.639×10^{-5}
cubic foot	cubic meter ($\mathrm{m^3}$)	2.832×10^{-2}
cubic yard	cubic meter (m)	0.7646
dram (apothecaries’)	kilogram (kg)	3.888×10^{-3}
dram (avoirdupois)	kilogram (kg)	1.772×10^{-3}
drain (U.S. fluid)	cubic meter ($\mathrm{m^3}$)	3.697×10^{-6}
dyne	newton(N)	1.0×10^{-5}
dynes per centimeter	newton per meter (N/m)	1.0×10^{-3}
fluid ounce (U.S.)	cubic meter ($\mathrm{m^3}$)	2.957×10^{-5}
foot	meter (m)	0.3048[†]

(*Continued*)

To convert from	*To*	*Multiply by*
gallon (U.S. dry)	cubic meter (m^3)	4.405×10^{-3}
gallon (U.S. liquid)	cubic meter (m^3)	3.785×10^{-3}
gallons per minute (gpm)	cubic meter per second (m^3/s)	6.308×10^{-5}
	cubic meter, per hour (m^3/h)	0.2271
grain	kilogram (kg)	6.480×10^{-5}
horsepower (560 ft · Ibf/s)	watt (W)	7.457×10^{2}
inch	meter (m)	$2.54 \times 10^{-2\dagger}$
inch of mercury (32°F)	pascal (Pa)	3.386×10^{3}
inch of water (39.2°F)	pascal (Pa)	2.491×10^{2}
kilogram-force	newton (N)	9.807
kilowatt hour	megajoule (MJ)	$3.6^{\dagger}$
liter (for fluids only)	cubic meter (m^3)	$1.0 \times 10^{-3\dagger}$
micron	meter (m)	$1.0 \times 10^{-6\dagger}$
mil	meter (m)	$2.54 \times 10^{-5\dagger}$
mile (statute)	meter (m)	1.609×10^{3}
mile per hour	meters per second (m/s)	0.4470
millimeter of mercury (0°C)	pascal (Pa)	1.383×10^{2}
ounce (avoirdupois)	kilogram (kg)	2.835×10^{-2}
ounce (troy)	kilogram (kg)	3.110×10^{-2}
ounce (U.S. fluid)	cubic meter (m^3)	2.957×10^{-5}
ounce-force	newton (N)	0.2780
peck (U.S.)	cubic meter (m^3)	8.810×10^{-3}
pennyweight	kilogram (kg)	1.555×10^{-3}
pint (U.S. dry)	cubic meter (m^3)	4.732×10^{-4}
pint (U.S. liquid)	cubic meter (m^3)	5.506×10^{-4}
poise (absolute viscosity)	pascal-second (Pa · s)	0.10
pound (avoirdupois)	kilogram (kg)	0.4536
pound (troy)	kilogram (kg)	0.3732
pound-force	newton (N)	4.448
pound-force per square inch (psi)	pascal (Pa)	6.895×10^{3}
quart (U.S. dry)	cubic meter (m^3)	1.101×10^{-3}
quart (U.S. liquid)	cubic meter (m^3)	9.464×10^{-4}
quintal	kilogram (kg)	1.0×10^{-2}
rad	gray (Gy)	1.0×10^{-2}
square inch	square meter (m^2)	6.452×10^{-4}
square foot	square meter (m^2)	9.290×10^{-2}
square mile	square meter (m^2)	2.590×10^{6}
square yard	square meter (m^2)	0.8361
ton (long, 2240 lb)	kilogram (kg)	1.016×10^{3}
ton (metric)	kilogram (kg)	1.0×10^{3}
ton (short, 2000 lb)	kilogram (kg)	9.072×10^{2}
torr	pascal (Pa)	1.333×10^{2}
yard	meter (m)	0.9144

ABBREVIATIONS AND ACRONYMS

A	ampere
AAMI	Association for the Advancement of Medical Instrumentation
ABS	acrylonitrile–butadiene–styrene
ac	alternating current
adh	adhesive
AF	aluminum foil
AFR	Air Force Regulation
AGV	automated guide vehicle
AM	aluminum metallization
AN	acrylonitrile
AN/MA	acrylonitrile–methacrylate copolymers
ANS	acrylonitrile–styrene copolymers
ANSI	American National Standards Institute
API	American Paper Institute
ASME	American Society of Mechanical Engineers
ASP	asphalt
ASQC	American Society for Quality Control
ASTM	American Society for Testing and Materials
avg	average
BATF	Bureau of Alcohol, Tobacco and Firearms
B&B	blow-and-blow
BBP	butyl benzyl phthalate
BCL	British Cellophane Limited
BHEB	*tert*-butylated hydroxyethylbenzene
BHT	*tert*- butylated hydroxytoluene
BIB	bag-in-box
BK	bleached kraft
BMC	bulk molding compound

BON	biaxially oriented nylon film
BOPP	biaxially oriented polypropylene film
bpm	bottles per minute; bags per minute
BSP	British standard pipe thread
Btu	British thermal unit
BUR	blowup ratio
°C	degree Celsius
CA	controlled atmosphere
ca	approximately (circa)
CAD	computer-aided design
CAE	computer-aided engineering
cal	calorie (4.184 J)
Cal	food calorie (1000 cal)
CAP	cellulose acetate propionate; controlled atmosphere packaging
CELLO	cellophane
CFR	Code of Federal Regulations
CGMP	Current Good Manufacturing Practice
CGPM	Conference Generate des Poids et Mesures (General Conference on Weights and Measures)
CI	central impression
CIPM	Comité International des Poids et Mesures (International Committee on Weights and Measures)
cm	centimeter
CMA	Closure Manufacturers Association
CNC	computer numerical control
coex	coextruded
COF	coefficient of friction
COFC	Container on Flat Car
COREPER	Committee of Permanent Representatives (EEC)
CPE	chlorinated polyethylene
cpm	cans per minute
cPs	centipoise (10^{-3} Pa · s)
CPSC	Consumer Product Safety Commission
CPU	central processing unit
CR	child-resistant
CRC	child-resistant closure
CRT	cathode-ray tube
CT	continuous thread
D & I	drawing and ironing (cans)
dB	decibel
dc	direct current
DEHP	di(2-ethylhexyl)phthalate
DEG	diethylene glycol
DGT	diethylene glycol terephthalate
dia	diameter
DINA	diisononyl adipate
DIAM	Defense Logistics Agency Manual
DME	dimethyl ether
DMF	Drug Master File
DMT	dimethyl terephthalate
DOA	dioctyl adipate
DOD	U.S. Department of Defense
DOP	dioctyl phthalate
DOT	U.S. Department of Transportation
DOZ	dioctyl azelate
DPM	double package maker
DR	double-reduced
DRD	draw-redraw (cans)
DSAM	Defense Supply Agency Manual
DWI	drawn and ironed (cans)

EAA	ethylene-acrylic acid
ECOSOC	Economic and Social Committee (EEC)
ECCS	electrolytic chromium-coated steel
EEA	ethylene-ethyl acrylate
EEC	European Economic Community
eg	for example (*est gratia*)
EG	ethylene glycol
EHMW	extra-high-molecular-weight
EIA	Electronic Industries Association
ELC	end-loading construction
EMA	ethylene methacrylate
EMAA	ethylene-methacrylic acid
EMI/RFI	electromagnetic interference/radio frequency interference
EPA	Environmental Protection Agency
EPC	expanded-polyethylene copolymer
EPE	expanded polyethylene
EPR	ethylene-propylene rubber
EPS	expanded polystyrene
ESC	environmental stress cracking
ESCR	environmental stress-crack resistance
ESD	electrostatic discharge
ESO	epoxidized soybean oil
est	estimated
ETO	ethylene oxide
ETP	electrolytic tinplate
EVA	ethytene-vinyl acetate
EVOH	ethylene-vinyl alcohol
F_{50}	value at which 50% of the specimens have failed
°F	degree Fahrenheit
FDA	U.S. Food and Drug Administration
FD&C	Food, Drug, and Cosmetic
FEP	fluorinated ethylene-polypropylene
ffs	form/fill/seal
FI	flow index
ft oz	fluid ounce (29.57 mL in United States)
FPMR	Federal Property Management Regulations
FRH	full-removable head
FEP	fiberglass-reinforced plastics
ft	foot
ft · Ibf	foot-pound force (1.366 J)
G	specific deceleration: gravitational acceleration; specific acceleration: gravitational acceleration
g	gravitational acceleration (9.807 m/s^2)
g	gram
gf	gram-force (0.0098 N)
ga	gauge
gal	gallon (3.785 L in United States)
GMA	Grocery Manufacturers Association
GMP	Good Manufacturing Practice
GNP	gross national product
GPPS	general-purpose polystyrene
Gy	gray (10^{-2} rad)
h	hour; height
HBA	health and beauty aids
HCP	healthcare packaging
HD	head diameter
HDPE	high-density polyethylene
HDT	heat-deflection temperature
HF	high-frequency
HFFS	form/fill/seal, horizontal
HIMA	Health Industry Manufacturers' Association
HIPS	high-impact polystyrene

HLMI	high-load melt index
HM	hot melt
HMW	high-molecular-weight
HNR	high-nitrile resin
hp	horsepower (746 W)
HP	high-pressure
HPP	homopolymer polypropylene
HRC	Rockwell hardness (C scale)
HRM	Rockwell hardness (M scale)
HRR	Rockwell hardness (R scale)
HTST	high-temperature–short-time
Hz	hertz (cycles per second)

IBC	intermediate bulk containers
ICAO	International Civil Aviation Organization
ie	that is (*id est*)
IM	intramuscular
IMDG	International Maritime Dangerous Goods
IML	in-mold labeling
IMO	International Maritime Organization
in.	inch (2.54 cm)
I/O	input/output
IPA	isophthalic acid
IS	individual section
ISO	International Standards Organization
ITRI	International Tin-Research Institute
IV	intrinsic (or inherent) viscosity; intravenous

J	joule (energy)

k	kilo (10^3)
K	degree Kelvin
k.d.	knocked-down
kgf	kilogram-force (9.806 N)
kJ	kilojoule
km	kilometer
kPa	kilopascal (0.145 psi)

L	liter (volume)
lb	pound (mass) (453.6 g)
Ibf	pound force (4.448 N)
LCB	long-chain branching
LCD	liquid-crystal display
L:D	length:diameter
LDPE	low-density polyethylene
LED	light-emitting diode
LLDPE	linear low-density polyethylene
LMW	low-molecular-weight
LSI	large-scale integration
L:T	length:thickness
LVP	large-volume parenteral

M	mega (10^6)
M_N	number-average molecular weight
M_W	weight-average molecular weight
m	meter, milli (1/1000)
MA	modified atmosphere; methyl acrylate
MAN	methacrylonitrile
max	maximum
MBS	methacrylate–butadiene atyrene
m/c	cylinder mold
MD	machine direction
MDPE	medium-density polyethylene
MET	metallized
MF	mechine-finished
MFR	melt-flow rate
mg	milligram
MG	mill-glazed; machine-glazed
MGBK	machine-glazed bleached kraft
MGNN	machine grade natural Northern
mi	mile
MI	melt index
MIL	military
min	minute; minimum
MIR	multiple-individual-reward
MMA	methyl methacrylate
MMW	medium molecular weight
mn	millinewton (2.25×10^{-4} Ibf)
MN	meganewton (224,909 Ibf)
MOE	modulus of elasticity
MOR	modulus of rupture
MP	microprocessor; melting point
MPa	megapascal (145 psi)
ms	millisecond
MSW	municipal solid waste
MTB	Materials Transportation Bureau
MVTR	See WVTR
MW	molecular weight
MWD	molecular-weight distribution
μm	micrometer

N	newton (force)
N/A	not available
NASA	National Aeronautics and Space Administration; National Advertising Sale Association
NBS	National Bureau of Standards
NC	nitrocellulose
NCB	National Classification Board
NDA	New Drug Application
NEC	not elsewhere classified
NF	*National Formulary*
NK	natural kraft
nm	nanometer (10^{-9} meter)
NMFC	National Motor Freight Classification Committee
NODA	*n*-octyl *n*-decyl adipate
NPIRI	National Printing Ink Research Institute
NSTA	National Safe Transit Association
NWPCA	National Wooden Pallet and Container Association

Ω	ohm (resistance)
OD	optical density
OL	overlacquer
ON	oriented nylon
OPET	oriented polyester
OPP	oriented polypropylene
OPS	oriented polystyrene
OSHA	Occupational Safety and Health Administration
OTC	over-the-counter
OTR	oxygen transmission rate

Pa	pascal (pressure)
PA	Proprietary Association
PAN	polyacrylonitrile
P&B	press-and-blow
PBT	poly(butylene terephthalate)
PC	personal computer; polycarbonate
PCTFE	poly(chlorotrifluoroethylene)
PE	polyethylene
PEPS	Packaging of Electronic Products for Shipment
PET	poly(ethylene terephthalate); polyester
phr	parts per hundred of resin
PIB	polyisobutylene
PLI	pound force per lineal inch

PM	Packaging Materials
PMMA	Poly(methyl methacrylate)
PMMI	Packaging Machinery Manufacturers Institute
PP	polypropylene
ppb	parts per billion (10^9)
ppm	parts per million (10^6)
PPP	poison-prevention packaging
PPPA	Poison-Prevention Packaging Act
PR	printing
proj	projected
PS	polystyrene
psi	pound (force) per square inch (6.893 kPa)
psig	psi gauge pressure
PSTA	Packaging Science and Technology Abstracts
PSTC	Pressure-Sensitive Tape Council
PTFE	polytetrafluoroethylene
PVAc	poly(vinyl acetate)
PVC	poly(vinyl chloride)
PVDC	poly(vinylidene chloride)
PVF	poly(vinyl fluoride)
PVF_2	poly(vinylidene fluoride)
PVOH	poly(vinyl alcohol)
PX	postexchange
Q_{10}	change in reaction rate for a 10°C temperature increase
QA	quality assurance
QAI	quaternary ammonium inhibitor (nitrite)
qt	quart (946 mL in United States)
R&D	research and development
RCF	regenerated cellulose film
RCPP	random-copolymer polypropylene
RD	root diameter
RDF	refuse-derived fuel
rf	radiofrequency
rh	relative humidity
RIM	reaction injection molding
RM-HNR	rubber-modified high-nitrile resin
rpm	rotations per minute
RSC	regular slotted container
RVR	rim-vent release
s	second
SAN	styrene–acylonitrile
SB	styrene–butadiene
SBS	solid bleached sulfate
SCB	short-chain braching
SCF	Scientific Committee on Food (EEC)
SCR	Semicondutor
SIC	Standard Industrial Classification
SMC	sheet molding compound
SMMA	styrene–methyl methacrylate
SP	special packaging
sp gr	specific gravity
SPPS	solid-phase pressure forming
SR	single-reduced
SUS	solid unbleached sulfate
sq	square
SVP	small-volume parenteral
TA	thread angle
TAPPI	Technical Association of the Pulp and Paper Industry
TD	thread-crest diameter
TE	tamper-evident
tffs	thermoform/fill/seal
TFS	tin-free steel
T_g	glass-transition temperature
TH	tight head
T_m	melting temperature
TIS	Technical Information Service
TOFC	trailer on flatcar
TPA	terephthalic acid
TR	tamper-resistant
UCB	Union Chimique Belge
UCC	Uniform Clarification Committee
UKJ	Uniform Freight Classification Committee
UHMW	ultra-high-molecular-weight
UN	United Nations
UPS	United Parcel Service
USDA	United States Department of Agriculture
USP	*US Pharmacopeia*
uv	ultraviolet
V	volt
VA	vinyl alcohol
VC	vinyl chloride
VCI	volatile corrosion inhibitor
VCM	vinyl chloride monomer
VDC	vinylidene chloride
VFFS	form/fill/seal, vertical
vol	volume
vs	versus
W	watt (J/s)
WD	wire diameter
wk	week
wt	weight
WVTR	water-vapor transmission rate
XD	cross-direction
XKL	extensible kraft linerboard
yr	year
ZCC	zero-crush concept

Appendix B

GLOSSARY OF PACKAGING TERMINOLOGY AND DEFINITIONS

Paul Zepf
Zarpac, Inc.
Oakville, Ontario, Canada

GLOSSARY

The attempt of this glossary is to communicate, define, and clarify common words used in the packaging industry as they relate to machines and processes. This glossary has evolved over time and will continue to evolve and refine these definitions and terms and add new definitions and terms as required. Just because someone uses the same word or term as another individual does not mean that person understands it the same way. It has been found that miscommunication and misunderstandings are common in the packaging industry even when using the same word. The reader is encouraged to contact the author pertaining to clarifying an existing definition and/or adding more terms.

Wherever possible, definitions from other sources or associations have been maintained, such as terms and definitions from the canning trade, to achieve as much alignment as possible with the large diversity in the packaging industry.

Absolute humidity The actual weight of water vapor contained in a unit volume or weight of air. See Relative humidity.

Absorbent A substance that has the ability to soak up or retain other substances, such as sugar or salt absorbing water, when exposed to high relative humidity atmospheres.

Acid A substance, usually a liquid, that increases the concentration of hydrogen ions (H^+) in water and reacts with a base to form a salt. On a pH scale, an acid has a pH value of <5; a pH value of 7 indicates a neutral substance. As the pH value declines from pH<5, the substance becomes more acidic and is generally more corrosive.

Accumulation An accumulation apparatus is a device that deliberately amasses inputs or products into one place for the next required operation or process. Taking a single line of product and collating the products into multiple rows to go into an oven, cooler, or similar operation is an example of accumulation. Accumulation should not be confused with buffers. The definition of buffer is to shield or cushion (via conveyor length or off-loading areas such as tables or conveyors to let the inputs gather) an upstream machine from a downstream machine that stops. Generally, a buffer is a technique used as a positive modulating effect on utilization. The two definitions should not be used interchangeably.

Achievable run speed That speed or rate as tested during commissioning (which also verifies the packaging line design criteria of needs) to be the needed sustainable steady-state speed on a per minute or per hour basis with a wastage factor of<0.01. It is generally 20% less than the packaging line capacity and 50–70% less than the packaging line capacity for a true just-in-time (JIT) packaging line. The proposed run speed, the achievable run speed, and the design run speed can be used interchangeably, although the achievable run speed is the phase used in this book.

Action steps Specific, tactical activities you take to accomplish goals and objectives.

Activity An individual step or piece of work that is part of the total job being scheduled.

Activity-based costing The use of cost accounting tools that attempt to allocate indirect or overhead costs on the basis of related activities, rather than using surrogate allocation bases such as direct labor or machine hours, floor space, or material costs.

Actual set run speed That target speed or rate as set or fixed for a given package run cycle on a per minute or per hour basis that is subjectively set by the operator or management. It is generally equal to (ideal) or less than the achievable run speed (usually). It is the dialed run speed set by the operator or management. On dynamically controlled automated packaging lines, it is the instantaneous steady-state target output rate. Note that the effects of wastage rework and stoppages have not been considered.

Additive Any substance, the intended use of which results or may reasonably be expected to result, directly or indirectly, in its becoming a part of or otherwise affecting the characteristics of any input.

Adsorbent The material on whose surface adsorption takes place.

Adsorption The adhesion of a substance to the surface of a solid or liquid.

Adulterant (adulteration) Foreign materials in the product, especially substances that are aesthetically objectionable, hazardous to health, or indicate that unsanitary handling or manufacturing practices have been employed.

Aeration The bringing about of intimate contact between air and a liquid by bubbling air through the liquid or by agitation of the liquid.

Aerator A device for promoting aeration.

Aerosol The colloidal suspension in which gas is the dispersant. Dispersion or suspension of extremely fine particles of liquid or solid in a gaseous medium.

Affordable capital limits (ACLs) The specified cost or "cap" for a project to achieve maximum value. The ACL is based on the economic facts associated with a specific business need, not a "wish" or arbitrary "grab number."

Agglomerate To gather, form, or grow into a rounded mass, or to cluster densely.

Aftersales service Service provided after the sale, such as repair or warranty service, customer problem solving, or follow-up in canvassing customers as to their opinions, needs, quality of products, and quality of service (timely delivery) to ensure that the customer is and remains satisfied.

Allocated inventory Materials that are in inventory or on order but have been assigned to specific production orders in the future. These materials are therefore not available for use in other orders.

Anaerobes These are microorganisms that grow in the absence of oxygen. Obligate anaerobes cannot survive in the presence of oxygen. Facultative anaerobes normally grow in oxygen but can also grow in its absence.

Anaerobic Living or active in the absence of free oxygen.

ANSI American National Standards Institute.

Antimicrobial A compound that inhibits the growth of a microbe.

Apparent viscosity (see Viscosity) Viscosity of a complex (non-Newtonian) fluid under given conditions.

Appropriation An authorization by the appropriate executive or management committee for funding of capital projects in excess of a specific amount.

Approved-bidders list A list of prequalified contractors used for the purpose of soliciting competitive bids.

Aseptic processing and packaging The filling of a commercially sterilized cooled product into presterilized containers, followed by aseptic hermetical sealing, with a presterilized closure, in an atmosphere free of microorganisms.

Asset utilization Fraction of time of a 24-h day, 7 days a week potential time, that is actually used in producing quality packages until the package run cycle is completed (package run cycle start point to the next package run cycle start point). If the package run cycle (start to next start) takes exactly 3 days, then the total asset utilization time is $24 \times 3 = 72$ h, even though only one shift per day may be used.

Authorize To give final approval.

Authorized work Work that has been approved by higher authority.

Automation A technique of making industrial machinery, a process, or a system operate in an independent or self-controlling manner. This is the generic definition of automation. With regard to packaging, this definition should be adjusted to reflect the objectives of packaging, as follows: Automation is controlling the packaging line by using the optimum technique to cause the process to operate at a steady state pace in a self-controlling manner. Note that these definitions say nothing about eliminating labor or guaranteeing profitability, but they both imply that automation will optimize labor and give the potential of profitability.

Availability The total available time for which a machine or system is in an operable state or between failures divided by the sum of the mean time between failures plus the mean time to repair plus the mean preventive maintenance time. Simply put, it is the fraction of time the machine is in an operable state to the total time period defined. An operable state is the condition that allows the machine or system to function at its achievable run speed in a manner that produces an outcome or an assemblage of inputs within the stated specifications and conformance to customer's needs.

Available inventory Materials that are in inventory or on order that are not safety stock or allocated to other uses. This available inventory is on immediate call to sustain the needs of production on a timely bases without interruption.

Backcharge The cost associated with corrective action taken by the purchaser. This cost is chargeable to the supplier under the terms of the contract.

Baffle A partition or plate that changes the direction or restricts the cross section of a fluid, thus increasing the velocity or turbulence.

Base Alkaline substances ($pH > 7.0$) that yield hydroxyl ions (OH^-) in solution. As a general rule, as the pH value increases, the corrosive ability of the solution increases.

Benchmarking A comparison or scale of product, function, practice, or strategy between identical industry segments. There are four types of benchmarking:

Product benchmarking, which evaluates the current and future strengths and weaknesses of internal and external competitive products or packages.

Functional benchmarking, which can be a comparison of the functional process or manufacturing technique relating to product development, packaging-line design, machinery setup, packaging-line control, and logistics of inputs in and packages out. Utilization when set up correctly can be a form of functional benchmarking.

Best-practices benchmarking, which goes beyond the functional benchmarking by focusing on management practices.

Strategic benchmarking, which compares the goals, direction, and key performance measure of a company within an industry sector against their internal or external competitors.

The *performance index* is a benchmark of functional and best practices.

Bid-clarification management Meeting with potential suppliers to clarify contract and associated issues prior to a decision on selection of a contractor.

Bid evaluation Review of a supplier's ability to perform the work requested. The supplier's financial resources, ability to comply with technical criteria and delivery schedules, and past performance are considered.

Bid list A list of suppliers invited to submit bids for the specified goods or services.

Bid response A negative or positive response to an invitation to bid from prospective suppliers.

Bill of material (BOM) The list of all end items or products that is a major element of the material requirements planning (MRP) system. In addition, a bill of material contains a listing of all raw materials, parts, subassemblies, and assemblies that go into each end item or package, as well as how the components go together.

Biodegradability Susceptibility of a chemical compound to depolymerization by the action of biological agents.

Blanching Heating by direct contact with hot water or live steam. It softens the tissues, eliminates air from the tissues, destroys enzymes, and washes away raw flavors.

Breakdown maintenance Breakdown maintenance and emergency maintenance are basically the same, when the predominate method of maintenance is breakdown maintenance. Breakdown maintenance is doing no maintenance other than lubrication between breakdowns. Repairs and adjustments are done as a result of reduced or no production occurring. Emergency maintenance occurs when a technical person is called on to perform a repair at any time of the day without being forewarned. With most other types of maintenance, emergency maintenance should be the exception, not the rule, as in breakdown maintenance.

British thermal unit (Btu) The British engineering unit of heat quantity. It is approximately the quantity of heat that will raise the temperature of 1 pound of water 1 degree Fahrenheit. 1 Btu = 0.252 calories = 1054 J.

Buffer The definition of a buffer is to shield or cushion (via conveyor length or off-load areas to let the inputs gather) an upstream machine from a downstream machine that stops or slows down. Generally, a buffer is a technique used to maintain uptime and effect utilization. It should not be confused with accumulation. The definition of accumulation is a device that deliberately amasses inputs or products into one place for the next required process. The two definitions are similar but different.

Bulk density Weight per unit volume of a quantity of solid particles that depends on the packing density.

Bursting strength The strength of material in pounds per square inch, measured by the Cady or Mullen tester.

Business strategy The organization's reason for being, including purpose, mission, operating principles, objectives, and goals.

CAD Computer-aided design. This term implies the use of a computer and drafting software such as AutoCAD (trademark) to produce and store prints for layout, installation, machining, assembly, and fabrication. Another definition is the use of computers in interactive engineering drawings and the storage and retrieval of designs.

Caliper The thickness as related to paperboard, of a sheet measured under specified procedures expressed in thousandths of an inch. Thousands of an inch are sometimes termed "points." The precision instrument used in the paperboard industry to measure thickness. To measure with a caliper.

Calorie A unit of heat or the amount of heat necessary to raise the temperature of a gram of water 1 degree Celsius. Nutritionists use the large Calorie or kilo-Calorie (spelled with a capital C), which is 1000 calories. One Calorie (kilo-calorie) = 4184 J or 3.968 Btu.

Computer-aided manufacturing (CAM) This term implies the use of a computer and postprocessing or linking software (such as Smartcam or Mastercam) to manipulate and compile data into a machine language for a machine(s) to execute the desired function. Another definition is the use of computers to program, direct, and control production equipment.

Can, cylinder A can whose height is relatively large compared with its diameter. Generally called a "tall can."

Can, flat A can whose height is equal to or smaller than its diameter.

Can, key-opening A can opened by tearing off a second strip of metal around the body by means of a key, or any can opened by means of a key.

Cap (see also Closure) Any form or device used to seal off the opening of the container, so as to prevent loss of its contents.

Cap, lug A cap closure for glass containers in which impressions in the side of the cap provide a grip when the cap is given a quarter turn, as compared to the full turn necessary with a screw cap.

Cap, screw A cylindrical closure having a thread on the internal surface of the cylinder capable of engaging a comparable external thread on the finish or neck of a container, such as a glass bottle or collapsible tube.

Cap, snap-on A type of closure for rigid containers. The sealing action of a snap-on cap is effected by a gasket in the top of the cap that is held to the neck or spout of the container by means of a friction fit on a circumferential bead. Material of construction is either metal or semirigid plastic.

Cap, two-piece vacuum Standard CT (continuous-thread) or DS (deep-screw) caps, equipped with a separate disk or lid that is lined with sealing for vacuum-packing processes.

Capability (schedule) In simple terms, *capability* is the relative measure of how capable or how effective is the actual packaging process to produce the appropriate volume of needed packages within the planned plant operational time period or schedule. Capability or, more correctly the *schedule capability*, relates to the ratio of the scheduled run cycle time available divided by the actual package run cycle time used. This definition is valid only if the actual time taken is greater than the scheduled time. If the actual time is less than the scheduled time, the capability is the actual package run cycle time divided by the scheduled run cycle time. Capability is always equal to or less than 1.

Capacity Capacity for a given packaging line and product is the *upper possible sustainable limit* of packages passing a point just before warehousing or shipping in a given amount of time (usually one minute or one hour or one shift). *Sustainable* refers to the ability to maintain consistent production of quality packages at a given speed.

One could argue that it is the speed at which the percentage of rejects and/or jams begins to rise in a nonlinear manner. Capacity is usually expressed as a rate (packages/minute, etc.). Typically, a line will operate at a somewhat lower speed, called the *actual set run speed*. For just-in-time (JIT) processing, all machines and systems in the packaging process as well as making must have excess capacity.

Capacity requirements planning (CRP) The process of reconciling the master production schedule to the labor and machine capacities of the production departments over the planning horizon. This process is generally used in conjunction with material requirements planning (MRP) systems.

Case A nonspecific term for a shipping container. In domestic commerce, "case" usually refers to a box made from corrugated or solid fiberboard. In maritime or export usage, "case" refers to wooden or metal box.

Cash flow The net amount of actual inflows and outlays generated by a project or business unit.

Cash-flow analysis The process of determining monthly and overall total cash flow for projects. The cumulative total is used as a measurement of actual versus budget costs. This activity helps monitor projects and costs.

Catalyst A substance that increases the rate of chemical reaction and remains unchanged at the end of a reaction.

Celsius (°C) The temperature on a scale of 100° between the freezing point (0°) and the boiling point (100°) of water.

Centimeter (cm) One-hundredth of a meter. Equivalent to 0.3937 in. One inch equals 2.54 cm.

Centipoise (cP) Unit of viscosity equal to $\frac{1}{100}$ dyn/($s^2 \cdot cm^2$).

Changeover time (or period) The time to complete the following items:

1. Exchange of changeover parts or tooling for all line elements.
2. Recalibration and/or adjustment of all line elements.
3. Run the first 1000 packages or 15 min of production, whichever comes first

At the end of this procedure, the line and all machine elements are expected to perform the desired functions to produce quality packages at the required output rate.

Clean in place (CIP) A machine's (such as a filler's) ability to be cleaned and sanitized in place on the packaging line without dismantling any components and minimizing time, product loss, cleaning solutions, cleaning procedures, and volume of water required.

Cleanup time or (period) The time required to (*1*) remove change parts from the previous package run cycle and (*2*) clean and/or flush out and inspect areas of the machine and line.

Closure The joint or seal that is made in attaching the cover to a glass container. Also, the type of closure, such as friction, lug, and screw top.

Computer numerically controlled (CNC) This term implies the use of a computer or processor on board the machine that is controlled by compiled program and/or data in APT or ASCII or G codes or other machine languages derived from software (such as Smartcam or Mastercam) to manipulate and instruct the machine in an exact manner.

Commissioning Commissioning is the act of sequentially and systemically starting up and testing a machine or machines or systems to ensure that they function as specified and that it can meet the needs of production. All components are tested and evaluated as to fit, function, vibration, alignment, integration, control, ergonomics, input flow, installation, and safety.

Commissioning, qualifying, and verifying (CQV) Commissioning, qualifying, and verifying (CQV), or more simply, "get up and stay up" (GUSU), is basically a management structure to ensure that a new or modified packaging line and all its machinery and systems are tested properly, the operators and maintenance personnel are adequately trained, and the results of the testing and training are verified or observed in the production runs without special assistance of any kind. Some companies restrict CQV to the machinery and systems and keep people and training separate.

Commissioning is the act of sequentially and systematically starting up and testing a machine or machines or systems to ensure that they function as specified. All components are tested and evaluated as to fit, function, vibration, alignment, integration, control, ergonomics, input, flow, installation, and safety.

Qualifying is the act of setting up and administering a training program that ensures the people who will be interfacing with the packaging line are given a thorough overview of the packaging line and a detailed program on what they need to know to complete their tasks without hesitation or guessing. All training must address the following questions:

When should training be done?
What training should be done?
How should we do training?
Where should we do training?
How much is enough training?
Manuals and other self-help tools?
Performance reviews and continuing improvement?
Company standards and policy?

Verifying is the act of being able to determine without hesitation that the machine testing and training of personnel is not only thorough but also effective in the day to day production of the packaging line without senior staff, consultants, and/or machinery service personnel being involved in any manner.

Training of all line and maintenance personnel is critical to the performance of any packaging line. Training must be thorough, to the extent that all personnel working on the line are knowledgeable in the overall operation and be the technical expert in their specific task(s). Management people must be experts in the overall operations of the line, and knowledgeable about the tasks and performance of each person working on the line.

Complete kit (CK) The complete kit (CK) is a managerial method or concept. It suggests that no work should start until all the items required for the completion of the job are available. These items such as components, tools, drawings information, and samples constitute the kit.

Computer-integrated manufacturing (CIM) The integration of the total manufacturing enterprise through the use of integrated systems and data communications coupled with new managerial philosophies that improve organizational and personnel efficiency. In other words, the business enterprise is dependent on human knowledge and information flow in order to operate efficiently. Companies that have implemented CIM successfully tend to say that they get the right information to the right people or devices in the right places at the right times to make the right decisions. CIM uses such a broad spectrum of technologies that it is best to think of CIM as a goal or strategy or philosophy as outlined by the company's needs and direction.

Computerized maintenance management system (CMMS) A computerized maintenance program is sometimes called a *computerized maintenance management system* (CMMS), which can form the central part of a TMM program. There are many computerized maintenance programs in use today. One or several can be an effective tool for your operation. Always remember that the software has to fit your needs, not the other way around. The main function of the computerized system is to make life easier and faster for maintenance to do their job.

Components Components can be either input items or product items. Example of components are labels, caps, containers, seals, cartons, cases, and the product such as liquids, pastes, pills, hardware, and powders.

Confidential-disclosure agreement (CDA) A legal agreement between two parties that establishes terms and conditions for protecting the security of specified information.

Consistency Resistance of a fluid to deformation. For sample (Newtonian) fluids, the consistency is identical with viscosity; for complex (non-Newtonian) fluids, identical with apparent viscosity.

Contingency plan Alternative strategies to accomplish a project's objectives.

Contract award Tne award of the contract to one prospective supplier. Acceptance is usually followed with a purchase order or a signed contract.

Contract manufacturer An outside company contracted to manufacture or package a product.

Control The authority or ability to regulate, direct, or dominate a situation or series of events. For any packaging line, whether manual, semiautomatic, or automatic, control is critical.

Cop Clean-out-of-place.

Criteria A document that provides objectives, guidelines, procedures, and standards that are to be used to execute the development, design, and/or construction portions of a project.

Critical activity Any activity on a critical path.

Critical path The longest path or chain of activities in the project that determines the shortest period of time in which the project can be completed.

Critical-path method (CPM) A scheduling technique using arrow, precedence, or PERT (program review and evaluation technique) diagrams to determine the length of a project and to identify the activities and constraints that are on the critical path.

Culture Observable work habits and priorities of an organization. It explains how the organization really works.

Customer The individuals, companies, or their representatives that receive a company's product, use a company's services, or purchase a company's product for resale (trade).

Cycle rate The cycle rate is the number of machine cycles per minute. We denote the number of cycles as N, so the cycle rate is dN/dt. It is not necessarily equal to the run speed of the machine. Over an 8-h period, the cycle rate of any machine in the packaging line is always higher than any set run speed. Most original equipment manufacturers (OEMs) specify their machine speeds based on cycle rates not output and therefore the OEM's speeds are the theoretical or design speeds that are possible.

Data-exchange format (DXF) Electronic format used to exchange CAD files from one software brand to another.

Deliverable A product that satisfies one or more objectives and must be delivered to meet contractual obligations.

Design The application of process engineering, machine design engineering, or power and controls engineering and the production of detailed engineering documentation, such as drawings and specifications, that explain how the technology defined in the design basis will be embodied in equipment and how the equipment will be constructed, assembled, and installed.

Design basis A document defining the project scope for designers and communicating how the engineering packages must be structured to fit construction requirements.

Design for manufacture (DFM) A general approach to designing products that can be more effectively manufactured. Often used in conjunction with databases. Includes such concepts as design for assembly, design for serviceability, or design for test.

Design speed The theoretical capacity obtained in a perfect operating environment. All adverse operating conditions are neglected, and all machinery is assumed to be in optimum operating condition. The design speed usually does not take into consideration the natural handling difficulties or stability of the inputs *(K value)*, environmental concerns, or training. This is usually the machinery builders advertised maximum functioning cycle speed for a given range of optimum inputs under ideal conditions. The concept of line speeds is not well understood in the packaging industry; thus there is a lot of confusion and disappointment over the actual results achieved. The following is a summary of the speed hierarchy from highest to lowest:

1. *Design speed* (usually the OEM's maximum cycle rate)
2. *Capacity* (highest sustainable cycle rate—about 80–90% of design speed)
3. *Achievable run speed* (target set speed or required steady-state condition)
4. *Actual set run speed* (actual packaging line set speed or dial speed)
5. *Output rate* (what goes to the warehouse or shipping per time period)

Note that the actual run speed will be set and its result will equal the output rate plus losses from rework, wastage, and stoppages.

Detergent Surface-active material or combination of surfactants designed for removal of unwanted contamination from the surface of an article.

Dew point The temperature at which air or other gases become saturated with vapor, causing the vapor to deposit as a liquid. The temperature at which 100% RH is reached.

Direct labor The labor expended in directly adding value to the package. For simplicity, it could be looked at as "touch" labor since direct-labor employees usually physically touch the product or inputs.

Disturbance Any anomaly in the flow of product, inputs, or packages in the packaging process that may or may not cause production to cease or slow down.

Disturbance frequency The number of disturbances for a specific output (quantitative amount) as determined by the set or actual run speed of the line.

Disturbance-frequency analysis (DFA) A production process tool that tracks and eliminates disturbances and their source(s). It is an excellent troubleshooting method for the analysis of small or large sections of the packaging process. DFA states that when the causes of disturbances are eliminated the downtime disappears, so why worry about time.

Disturbance-frequency period The minimum number of outputs allowed for one disturbance. The minimum number of outputs is determined mathematically from the actual set speed of the packaging process. As the actual set speed increases, the minimum number of outputs required increases exponentially.

Downtime The amount of time a machine or system is not functioning due to stoppages in a given shift or time period. Downtime should not include idle time or time the machine or system is waiting for inputs. Therefore downtime depends on stoppages and company policies.

Downtime analysis (DA) A production process tool that tracks the amount of time a given machine or system ceases production. Since it is time-based and monitors symptoms, not causes, its effectiveness is limited to specific applications. Historically, downtime analysis has been applied in an ineffective manner.

Drawings and specifications Engineering details for projects, packages, equipment, systems, and facilities.

Drop test A test for measuring the properties of a container by subjecting the packaged product to a free fall from predetermined heights onto a surface with prescribed characteristics.

Duration A unit measure of time for the time interval of a given stoppage.

DXF See Data-exchange format

Efficiency (*n*) A fundamental engineering term that is broadly defined as the ratio of benefits/penalties or, for packaging, the ratio of output/input. In keeping with this engineering definition, we define it as the average ratio of packaged output multiplied by the number of components over the sum of input components. Unfortunately, in the packaging industry, efficiency has become a generic catch-all term whose definition varies depending on the political needs of the organization, not its real needs.

Elemendorf test A test for measuring the tearing resistance of paper, paperboard, tape, and other sheet materials.

Element utilization The fraction of time a given machine or element is actually producing output at a set run speed divided by the total time available for production. Note that changeover, cleanup, and prep work are not included. This definition usually relates to machinery and/or components.

Elements Any machines, equipment, conveyors, or mechanical components by which the product and/or inputs are manipulated, assembled, transferred, collated, or brought into contact with each other. Examples of elements are fillers, cappers (with sortation), labelers, unscramblers, case packers soap presses, calenders, meat grinders, wrappers, packers, banders, and conveyors. For the purpose of clarification, all elements are considered or designated as machines. For example, we assume that all types of conveyors, collators, or buffers are elements.

Emergency maintenance Emergency maintenance occurs when a technical person is called on to perform a repair at any time of the day without being forewarned. With most other types of maintenance, emergency maintenance should be the exception not the rule as in breakdown maintenance. Breakdown maintenance and emergency maintenance are basically the same, when the predominate method of maintenance is breakdown maintenance. Breakdown maintenance is doing no maintenance other than lubrication between breakdowns. Repairs and adjustments are done as a result of reduced or no production occurring.

Equipment A capital-cost-estimating category for hardware used in manufacturing, including manufacturing support.

Equipment acceptance Criteria for approving equipment for use.

Estimate A statement of the probable capital appropriation scope and cost associated with changes needed to achieve a specified goal.

Excess capacity (EC) A managerial concept or approach advocating that a system's or process's capacity or limit should exceed the average demand (throughput or output). This position has been developed by Dr. Abraham Grosfeld-Nir from the University of Waterloo. The author agrees strongly with this concept. This concept is in contrast to the "lean and mean" approach where any attempt to have a capacity that exceeds the demand is viewed as wasteful ("fat") and any system or process having a capacity equal to the demand is perceived as ideal. Added to this is the traditional accountants' advise to cut extra capacity, in particular the work force, to force a balance between capacity and demand. In other words, the packaging process capacity is equal to the customer's demand and no more. It is very likely that, at times, EC will recommend to buy more capacity under given conditions, while an accountant would recommend a cut. The need for excess capacity arises from the presence of randomness in demand, processing time, quality, etc. (In a deterministic world, EC would, indeed, be wasteful.) Benefits of operating with EC are small WIP (work in process), quick response time, and increased quality. In observing JIT multistage systems it is clear that each stage is utilized only to a fraction of its capacity as it relates to the speed potential. Each stage is idle some of the time as a result of stoppages. Thus stages of a properly designed JIT system operate with excess capacity. Experience indicates that typically in the automotive industry, stages are utilized 60–80% of their capacity. To use JIT in packaging, it can be argued (because of the speeds involved) that "speed utilization" or the set run speed of 50–70% of the capacity speed are proper for JIT to be effective.

Extrusion The process of forcing a material in plastic condition through an orifice.

Factory end Bottom or can manufacturer's end.

Failure analysis A formal analysis that assumes failure and attempts to define the paths leading to failure and what should be done to prevent it.

Failure rate The ratio of the total number of failures to the cumulative operating time for a stated period of time. We denote this by the symbol λ, and its units are failures per unit of time.

Feasibility studies Experimental studies on a process or equipment to access what results are achievable and/or what will be required to produce a desired result.

Flow sheet (FS) A schematic presentation of a process.

Flowchart A graphic representation of a work process in which each step in the process proceeds from start to finish.

Fluidity Reciprocal of viscosity.

Freight on board (FOB) The term used to signify that the seller is required to bear all costs required to place the goods aboard equipment of the transporting carrier. The stated FOB point is usually the location where title to the goods passes to the buyer. The buyer is liable for all charges and risks after passing of title.

Frequency The number of occurrences in a given period of time.

Funding The process that leads to a specific amount of money and resources being set aside for or committed to a specific object.

Gantt chart A graphic presentation (bar chart) of project activities shown by time-scaled bars with the length of the bar equal to the duration of the activity.

Gelometer Instrument used to measure the time required for a fluid to gel. Also, instrument used to determine the firmness of a gel.

General terms and conditions A package of standard requirements included with all purchase orders.

Good manufacturing practices (GMP) A document that describes agreed-to best or optimal procedures for manufacturing.

Headspace The vertical distance between the level of the product (generally the liquid surface) and the inside surface of the lid in an upright, rigid container.

Hermetically sealed container A container designed and intended to be secured hermetically against the entry of microorganisms and to maintain the commercial sterility of its contents after processing.

High-performance products Products with clearly superior attributes such as taste, styling, speed, smell, comfort, and effectiveness with results in the packager receiving a premium price and/or dominate market share more than the perceived normal product.

Hydrometer densimeter Device used for the measurement of specific gravity or density.

Impact strength The ability of a material to withstand mechanical shock.

Indirect labor Any labor, including supervision and management, that is not direct labor or directly connected to the production or manufacturing process. Overhead activities such as material handling, stockroom, inspection, all engineering functions, maintenance, supervision, cost accounting, and personnel are usually included.

Input (*X*,*x*) Input for a given packaging line is the specific item or part required for the package assembly operation or packaging process to form part of the complete package. Examples of input items are bottles, cartons, caps, labels, cases, pallets, tubes, and so on. Inputs are not product entities, but product entities can be classed as inputs. In general, inputs are discarded items that are trashed or recycled after product use. Since we use the symbol X for systems input, we will use x_i for the ith machine as the input for a machine. Note that several types of inputs may be required by a machine (and certainly by a line), but in general, only one output is produced. Minimizing input losses reduces cost, increases the performance index, and reduces the waste headed to landfills. From the economic point of view, reducing input item losses, as well as the number of different types of inputs, makes business sense. Minimizing the types of inputs maximizes performance and quality.

Input rate The input rate for a given packaging line is the amount of a specific item or part (required to form part of the complete package) processed or consumed in a given amount of time.

Integration *Integration* as it relates to the packaging process is defined as the mechanical, pneumatic, hydraulic, and/or electrical method of physically (mechanically or electronically) connecting machinery and input handling systems to ensure a smooth harmonized throughput operation. It should not be confused with automation and control. Usually control or automation cannot solve or correct poor or faulty integration.

Integration principles for input and product handling

1. Once you have it, don't let go. Having it means complete physical or electronic engagement so that the mechanism motion and the input motion are identical or within a tolerance range that is smaller than the functional requirements.
2. Eliminate or minimize input and package manipulations or change of direction, velocity, and/or inertia.
3. Always interface using complete integration or hand-shaking pass off within a defined boundary, not at a point. The interface position tolerance must be smaller than the operational functional window.
4. If manipulations are required because of overall design constraints, always match motions (intermittent to intermittent, continuous to continuous). Incompatible motions (continuous to intermittent and intermittent to continuous) always yield the highest unreliability.
5. For cycles $>60\,\mathrm{min}^{-1}$, continuous is superior to intermittent.

Keep it rugged and simple, meaning the fewer moving parts, the better.

Interfunctional communication Communications and understandings between manufacturing and other functional areas in a business.

Islands of automation Pieces of equipment or systems that are not integrated with the packaging line. They can be considered independent and not controlled by the packaging process directly. The output from each island of automation does not affect the other directly.

ISO 9000 Series Protocol An international set of documents written by members of a worldwide delegation known as the ISO (International Standards Organization)/Technical Committee 176. Its primary purpose is to harmonize the large number of national and international standards adopted by many countries. This series is also intended to be driven by market and customer needs. The ISO series consists of five main documents:

- Three core quality system documents that are models of quality assurance: ISO 9001, ISO 9002, and ISO 9003.
- Two supporting guideline documents: ISO 9000 and ISO 9004.

Following is a brief outline of each document.

ISO 9000 (ANSI/ASQC Q90-1987): *Quality Management and Quality Assurance Standards: Guidelines for Selection and Use*.

ISO 9001 (ANSI/ASQC Q91-1987): *Quality Systems—Model for Quality Assurance in Design/Development, Production, Installation and Servicing*. Applicable to contractual arrangements, requiring that design effort and the product requirements are stated principally in performance terms or they need to be established. Confidence in product conformance can be attained by adequate demonstration of certain supplier's capabilities in design, development, production, installation, and servicing.

ISO 9002 (ANSI/ASQC Q92-1987): *Quality Systems—Model for Quality Assurance in Production and Installation*. The specific requirements for the product are stated in terms of an established design or specification. Confidence in product conformance can be attained by adequate demonstration of a certain supplier's capabilities in production and installation.

ISO 9003 (ANSI/ASQC Q93-1987): *Quality Systems—Model for Quality Assurance in Final Inspection and Test*. The conformance of the product to specified requirements can be shown with adequate confidence, provided certain supplier's capabilities for inspection and test conducted on the product supplied can be satisfactorily demonstrated on completion.

ISO 9004 (ANSI/ASQC Q94-1987): *Quality Management and Quality System Elements Guidelines*.

Justification For most industries a justification is a written request for action that consists of

1. Acquisition of valid data
2. Presentation of the problem, need and data
3. A logical course of action with options and alternatives
4. Cost profiles
5. Benefits of undertaking a specific course of action

Just-in-time (JIT) First used by Toyota in Japan as the "Kanban system," it has been successful in reducing inventory while maintaining high throughput and increased quality. Kanbans are cards authorizing production or shipment of material. Mondem in 1981 defined JIT as a production system to produce a kind of units needed, at the time needed and in the quantities needed. Schonberger in 1982 defined JIT as goods produced just in time to be sold and only purchase materials just in time to be transformed into the product. Sohal in 1988 defined JIT as more of a philosophy than a series of techniques, the basic tenet of which is to minimize costs by restricting commitment to expenditure until the last possible moment.

Groenvelt in 1991 defined JIT as a management philosophy that fosters change and improvement through inventory reduction. To have the ideal situation of exactly the necessary amount of material available where it is needed and when it is needed. From the book *Benchmarking Global Manufacturing, 1992*, just-in-time is both a philosophy of eliminating waste and a toolset for pacing and controlling production and vendor deliveries on time, with short notice and with little or no inventory. According to JIT, multistage systems as found in packaging lines should be a pull (produce only in response to demand) and not a push (produce as long as there is raw material to be processed). In simple terms, JIT means that regardless of what disasters happen in my packaging process, you have the excess capacity to guarantee the highest probability of attaining the exact delivery window required by the customer with quality packages.

Kraft A term derived from a German word meaning strength, applied to pulp, paper, or paperboard produced from virgin wood fibers by the sulfate process.

Label Any display of written, printed, or graphic matter on the container of any consumer commodity, affixed to any package containing a consumer commodity.

Lag Specified time increment between the start or completion of an activity and the start or completion of a successor activity.

Lid Can end applied to open end of can in a cannery. Also known as top, cap, or packer's end.

Liner Generally, any liner material that separates a product within a container from the basic walls of the container.

Logic The description of how the activities in a schedule are related to one another.

Logic diagram Drawings using logic symbols that tell how a piece of equipment or system is to operate.

Lost-time accident (LTA) frequency One of the most widely used accident statistics. LTA frequency is a measure of the number of disabling injuries per year.

Lug A type of thread configuration, usually thread segments disposed equidistantly around a bottle neck (finish). The matching closure has matching portions that engage each of the thread segments.

Lump sum A method of paying for equipment fabrication and construction work in which the buyer pays the vendor a single lump sum for all the work involved.

Machine A *machine* can be defined as a system of components arranged to transmit motion and energy in a predetermined fashion. Another definition is that a machine typically contains mechanisms designed to provide significant forces and transmit significant power.

Machine downtime Machine (or element) downtime is the total amount of time a given machine in the packaging line stopped or ceased production during the run period.

Maintainability or mean time to repair (MTTR) *Maintainability* is the average time required to repair a device or system. This includes preparation time, active maintenance time, and delay time associated with the repair. It is quantified as the mean time to repair.

Maintenance The physical act of ensuring that all machinery and systems are in operable condition at all times, especially during scheduled periods of demand. Maintenance can also be defined as the ability to keep all mechanisms and machines required for optimum production available to not only produce but also maintain a steady flow of quality packages without interruption. Types of maintenance programs to maximize operational readiness and sustainability: (*1*) breakdown, (*2*) preventive, and (*3*) predictive.

Manufacturing costs Raw and packing materials, manufacturing expenses, processing costs, and variations.

Manufacturing lead time (MLT) The cumulative time from the beginning of the production cycle until an item is finally finished. Time spent in inventory as work in process, setup times, move times, inspection, and order preparation time are included.

Manufacturing overhead costs (MOC) Those costs that are allocated to unit product costs, including the cost of indirect labor as well as indirect purchased services and supplies but excluding unallocated period costs such as sales and marketing and R&D.

Master production schedule (MPS) The main or overriding schedule of the number and timing of all end items to be produced in a manufacturing plant over a specific planning horizon. An important input to the MRP computer program.

Material requirements planning (MRP) MRP is more of a computerized information system than a managerial philosophy that determines how much of each material, any inventory item with a unique part number, should be purchased or produced in each future time period to support the master production schedule (MPS). It is designed to contain information required for efficient decision making. MRP is mainly used by large industrial organizations but as more improved computer software and hardware emerge, smaller organizations will find MRP advantageous in their operations. Input to MRP is information from the MPS and the "bill of materials" (BOM). The MPS determines starting times for future jobs, while the BOM is a detailed description of all inputs (material and work) required for each job. MRP also monitors all in-stock inventory and outstanding purchase orders. On the basis of information about jobs in progress and waiting jobs, MRP regulates the purchase of material from internal and external suppliers. It also provides information about jobs behind schedule, for potential expediting. Methods such as the "economic order quantity" (EOQ) and "reorder point" (ROP) control material requirements, without taking into account information about job scheduling from the MPS. In contrast, MRP recognizes the handling material is more efficient when the information from the MPS is incorporated. MRP also aggregates requirements from different sources and sets timing for arrivals considering overall system performance, rather than aiming at local satisfaction. In other words, unlike EOQ and ROP, MRP takes advantage of dependent demand. MRP assumes all operations to be deterministic, which is unrealistic. One consequence of this assumption is the frequent need for expediting jobs. MRP requires dealing with an enormous amount of information that needs continuous update. It turns out that when details are required, MRP is unreliable. Maybe this will be taken care of as technology and advanced software are developed.

Mean The average value of several observed data.

Mean time between failures (MTBF) The cumulative operating time divided by the number of failures. This is the reciprocal of the failure rate.

Mean time to failure (MTTF) The average life of nonrepairable items. This does not apply to most machinery in the packaging industry, but it does apply to certain components (e.g., seals, bearings).

Mean time to repair (MTTR) *Mean time to repair* (or *maintainability*) is the average time required to repair a device or system. This includes preparation time, active maintenance time, and delay time associated with the repair. It is quantified as the mean time to repair (MTTR).

Mechanism A system of components arranged to transmit motion in a predetermined fashion. Another definition is that a mechanism is a device that transform motion to some desirable pattern and typically develops very low forces and transmits little power.

Melting The change from the solid to the liquid state. Also the softening of harder compounds.

Methodology The sequence or manner in which events are made to occur or a logical thinking process to achieve an end result.

Milestone A key network event that is of major significance in achieving the program, project, or contract objectives.

Mission Statement of purpose or reason for the existence of the organization. It answers the question who we are and why we exist. It expresses the distinctive competence or unique contribution of the organization.

Model A mathematical model consists of one or more equations that describe some idealized form of a system. The idealized form is rendered from the real form by making one or more simplifying assumptions. It is an attempt to explain or predict a portion of reality using mathematics.

Monitoring Following the progress of the project. This phase follows the preparation of the CPM plan and schedule.

Mylar A synthetic polyester fiber or film.

NFPA National Fire Protection Association.

Neck The part of a container where the bottle cross section decreases to form the finish.

Occupational Safety and Health Act Federal organization responsible for health and safety on construction sites and in plants.

Occurrence Any anomaly or action in the packaging process that actually stops that process. A *stoppage* and an *occurrence* are the same.

Optimized production technology (OPT) A philosophical approach that maximizes throughput through the modification or elimination of bottlenecks. Claiming that (only) throughput or output translates into sales, OPT aims at maximizing throughput. Improvements that do not render increased output are viewed as negligible. OPT concentrates on "bottlenecks" or critical resources. This aged manufacturing concept is still quite common in many packaging plants. Typically OPT can lead to extremely large inventory levels, which is contrary to JIT. OPT can give substantial gains in short time periods of 3 to 6 months.

Original equipment manufacturer (OEM) A manufacturer who produces equipment to be sold by another company.

OSHA See Occupational Safety and Health Administration.

OSHA No. 200 Log and Summary The OSHA recordkeeping form used to list injuries and illnesses and to note the extent of each case.

Output (Y, y) Output for a given packaging line and product is the exact quantity of quality packages produced in a package run cycle as required by the customer and shipped to the customer. It is denoted by the symbol Y. Similarly, we define the output for a machine or output rate as the number of items (of acceptable quality) leaving a machine in a given amount of time. We denote this by, y_i for the ith machine. The word *throughput* has the same definition as output, but this *Encyclopedia* uses the word output, which is the more correct term.

Output rate The output rate for a machine or system is the number of items (of acceptable assembled quality) leaving a machine or system in a given amount of time. We denote this by y_i for the ith machine. It is always less than the machine cycle rate and/or the actual set run speed, due to the effects of wastage, rework, and stoppages.

Package A metal can, glass bottle, plastic bag, or pouch which serves the functions of containing and protecting the product, as well providing convenience and communicating to the consumer.

Packaging Changeout (t_{pc}) Packaging change out is the sum of the changeover time, cleanup time, and prep work time. The package changeout is the total interval between finishing one run of a given package and starting another run with a different package.

Package-changeout utilization (U_c) The fraction of the package run cycle time the packaging line has available for producing output at a set run speed after changeover, cleanup, and prep time have been completed.

Package run cycle (PRC) The duration of specific events needed to produce a given amount of quality packages. It consists of the total end of the first production run to end of next production run period, which involves change out and the entire run or producing period.

Packaging line An assemblage of specialty-function machinery or systems and/or manual workstations from depalletizing to palletizing integrated together to carry out a process in which a given product is combined, inspected, and transported with inputs or media. The inputs themselves protect, control, and identify the product: (*1*) bottling lines for liquid products such as beverages, (*2*) canning lines for products such as precooked foods, or (*3*) box-packaging lines for materials such as powered detergents.

Packaging process The combined execution of specialty-function machinery or systems and/or manual workstations in order to carry out a process in which a given product is combined an/or assembled with inputs or media. Basically the *packaging process* has the same definition as a *packaging line* but is more encompassing because it makes people part of packaging line. Some companies, by nature of their operations, may include the making as part of the packaging process.

Paneling Distortion (sidewall collapses) of a container caused by development of a reduced pressure (too high to vacuum) inside the container.

Paper, water-resistant Paper that is treated by the addition of materials to provide a degree of resistance to damage or deterioration by water in liquid form.

Paper, wet-strength Paper that has been treated with chemical additives to aid in the retention of bursting, tearing, or rupturing resistance when wet.

Parallel elements Parallel elements (i.e., machines) perform the same type of operation in a system. The main line is split into two to feed each machine with consistent product and/or inputs. The elements need not be identical, and the speeds of each can be a factor of the total main-line output. Parallel machines provide system redundancy; the failure of any one of them will not stop the line but only reduce output by a factor. Usually, the combined capacity of the two parallel elements should equal over 125% of the total output plus wastage, rework, and stoppage losses.

Pasteurization A relatively mild heat treatment of food, intended to destroy all organisms dangerous to health, or a heat treatment that destroys some but not all microorganisms that cause food spoilage or that interfere with a desirable fermentation.

Percent complete A comparison of the actual status to the current projection. The percent complete of an activity in a program is determined by inspection of quantities placed as effort hours expended and compared with quantities planned or effort hours planned.

Performance *Performance* can be defined as the level or effectiveness of carrying out an action or execution of a sequence of events according to a prescribed functional description. A better definition for performance for the packaging industry can be as stated below.

> Performance in the packaging industry is a widely used term such as effectiveness that means different things to many people. Therefore the word *performance* is relative and qualitative. The only understanding that may be common to all is that it is a reflection of productivity, output, or effectiveness of time. Unless it is rigorously defined and understood, the word performances has limited value to decision makers, other than projecting a sense of being or desire. The author defines performance as a measure of profitability based on the ability to produce the needed quantity of quality packages in the time required to fulfill customer needs at the lowest per unit cost over a sustained long period of time (>1 year). To many people, performance is the best bang for the buck based on up-front costs or capital costs only, not on the best value, which is based on capital and ongoing operational costs. If one buys a system based on up-front costs or lowest costs to get in without working out operational costs over a 1-, 3-, or 5-year period, then their anticipated profits (based on marketing targets) will rarely materialize. Too many people are hooked on this false sense of performance that will only contribute to the long-term uncompetitiveness of the company. Short-term or no planning leads to long-term disasters. Anyone can demonstrate excellent performance hour by hour or even day by day, but performance can truly be judged only quarter by quarter and year by year, which translates into consistent steady-state production under complete control (manual or automatic) at all times and under all conditions.

Performance Index (PI) A method of evaluating, benchmarking, tracking, and verifying a company's packaging processes. It gets rid of the old confusing notion of line efficiency and establishes a new framework that establishes a level playing field, especially among multiple corporate plants running the same or similar products. The performance index can also be used to evaluate dissimilar types of packaging lines that are internal or external to the organization. The effectiveness of a packaging operation that relates directly to the profit of the product is the objective of the performance index. The PI also utilizes the most effective ideas an/or techniques used in OPT, JIT, TQM, TPM, and MRP and applies them to the packaging process. As such, the PI can be considered an operation's tool but only a tool in the benchmarking sense, because it is the tip of the pyramid from which everything else expands out to explain the PI value. As a benchmark, it can evaluate the functional and best practices of a company against itself or competitors. The performance index is a mathematical model that projects the overall rating of a packaging line. Technically, the PI is a composite measurement of the productivity of a given packaging line. In mathematical terms, the performance index is the efficiency multiplied by the utilization multiplied by the capability multiplied by the speed factor. Equal weighting is usually given to efficiency and utilization. Under ideal conditions, the PI value would be 1. A typical high-PI packaging line, such as a soft-drink line, should have a value greater than 0.8. Other lines will yield PIs ranging from 0.10 to 0.70. Locating and eliminating the source of low PI will improve productivity. Common symptoms of low PI are a low speed factor or high wastage on the line. Solving the problem is often easier than finding the problem. Note that the index excludes the number of people running the packaging line. When maximizing PI, labor will move to its optimal level, which is minimal labor input Management must avoid labor replacement and consider instead labor optimization, given the environment and the package. For a given packaging line and package, it is possible to determine the profit to be gained for each point gain in the PI. With this information, one can justify changes very quickly.

Permeability The passage of a gas, vapor, or liquid through a barrier without physically or chemically affecting it.

PERT Program evaluation and review technique.

pH The effective acidity or alkalinity of a solution; not to be confused with the total acidity or alkalinity. The pH scale is where pH 7 is the neutral point (pure water). Decreasing values below 7 indicate increasing activity, whereas increasing values above 7 indicate increasing acidity, while increasing values above 7 to indicate alkalinity. One pH unit corresponds to a 10-fold difference in acidity or alkalinity; hence, pH 4 is 10 times as acid as pH 5 and pH 3 is 10 times as acid as pH 4 and so forth. The same relationship holds on the alkaline side of neutrality, where pH 9 is 10 times as alkaline as pH 8, and so on. Most meat and fish products have pH values between 6 and 7, vegetables have pH values between 5 and 7, and fruits have pH values between 3 and 5.

Acid solutions	Neutral	Alkaline solutions
0 1 2 3 4 5 6	7	8 9 10 11 12 13 14

Planned maintenance A type of maintenance in which a company has a given period or periods of production idle times each month in which maintenance activities can be undertaken. In periods of heavy production demands, this type of maintenance breaks down into simple breakdown maintenance.

Planning The establishment of the project activities and events, their logical relations and interrelations to each other, and the sequence in which they are to be accomplished.

Predictive maintenance A type of maintenance that utilizes an array of sensors and/or monitoring equipment to determine the status and condition of critical wear components in machinery and systems so that proactive procedures or replacement can be undertaken at a convenient time period before the failure of the component could cause any unscheduled downtime.

Premium time An allowance to cover the premium portion of overtime pay, that is, the cost differential between straight time and overtime work.

Prep work time or (period) The time required to bring inputs to the line, load and stage ready for production. Some companies may combine change over with clean up and prep work.

Present value The cash value today of the difference between a project's investment and the related return over the project life.

Preventive maintenance A type of maintenance determined by historical data and life-cycle testing to determine optimum time of part life and therefore by extension lead to a program of part changeout prior to the anticipated part failure. Carried to its extreme, it can be a costly venture to a company, and therefore most preventive programs are tempered by budgets and other constraints.

Primary spoilage (see also Secondary spoilage) That spoilage caused by bacterial or chemical action of product packed within the can.

Process The succession of actions (filling, capping, labeling, palletizing, etc.) undertaken to make a package. Some companies may include the making, if it is essentially part of or integral to the packaging operation.

Procurement The acquisition (and directly related matters) of equipment, material, and nonpersonnel services (including construction) by such means as purchasing, renting, leasing (including real property), or contracting.

Procurement lead time The cumulative time from the beginning of the procurement order cycle (order commitment) until the procured item is delivered. It includes vendor lead time, transportation, receiving, and inspection time.

Product Those items used or consumed by the customer. They are usually items made or modified by human industry. Take shampoo as an example; the consumer uses the shampoo and throws away its container, cap, and labels. The product is the shampoo and the input items are the container, cap, and labels. (The term *product*, as a collective noun, can have a plural sense.)

Product amenities The extra product features that enhance the basic product and make it easier to use or more enjoyable. For example, a finger pump spray on a bottle versus a pull-and-squeeze cap.

Product run cycle (PRC) The duration of time needed to produce a given amount of quality packages based on the designed or historical output. It is the same as the package run cycle. The word *package* is more applicable than product in most industries and is used in this *Encyclopedia*.

Product specifications The written description of the products to be manufactured.

Product stability (*K* value) The ability of the product to be handled in a stable and consistent manner. A beer bottle, for example, has all the features necessary to make it a stable and consistent product:

- Cylindrical parallel shape
- Relatively low center of gravity
- Heavy, smooth base for stability and low friction
- Relatively hard to break
- A shape that remains stable throughout the packaging cycle

Generally, a stable product is a product that gives a packaging line the least amount of handling problems. This stability can be defined as a value *K*. A more rigorous definition of *K* value is left for future development. As a packaging line increases its level of automation, the *K* value becomes critical.

Product support Those activities that support the customer in the use of a product, such as customer education, information about related products, or services and information hotlines.

Productivity The level of ability or effectiveness in marketing, manufacturing, distributing, and servicing a package.

Project The overall work being planned. It will have one specific start point and one finish point in time.

Project manager The person on a project team responsible for the engineering process and appropriation management.

Psychrometer An instrument for measuring the humidity (water-vapor) content of air by means of two thermometers, one dry and one wet.

QA Acronym for quality assurance.

QCP (quick-change process) A new common phase used to describe the techniques used to design and operate a packaging line that is always prepared to change from one product to another within a minute notice. This encompasses quick changeover (QCO), clean-in-place (CIP), eradication of all possible adjustments, matchmark position settings for remaining adjustments, flexible crewing, tooling readiness, and a streamlined results-oriented management A similar phrase is quick changeout.

Qualifying The act of setting up and administering a training program that ensures that the people who will be interfacing with the packaging line are given a thorough overview of the packaging line and a detailed program on what they need to know to complete their tasks without hesitation or guessing. All training must address the following questions:

Whom should be trained?
When should training be done?
What training should be done?
How should we do training?
Where should we do training?
How much is enough training?
Manuals and other self-help tools?
Performance reviews and continuing improvement?
Company standards and policy?

Quality circles Teams of employees used to diagnose and solve quality problems relating to fulfilling the needs of the customer. It also includes the use of the work team concept for solving other problems related to productivity improvement, safety, and so on.

Quality control A system for assuring that commercial products meet certain standards of identity, fill of container, and quality sanitation and adequate plant procedures.

Quality function deployment (QFD) A set of techniques for determining and communicating customer needs and translating them into product and service design specifications and manufacturing methods.

Quality package A package that meets all design specifications and is manufactured in compliance is ISO 9001 or ISO 9002. Take a bottle of shampoo as an example of a quality package:

- The content must comply with internal and government weight and/or volume regulations.
- The print documentation must be clear, readable, accurate, and acceptable to the end customer and comply with government regulations at point of manufacture to point of end use.
- The container must be clearly coded and identified using industry-standard codes such as UPC and comply with customer and government regulations at point of manufacture to point of end use.
- The seal on the package must be seated correctly to a specified torque and/or form a protective seal against leakage, spoilage, contamination, and/or tampering.

In short, a quality package is the end product envisioned by the marketing group that will fulfill all the design criteria and packaging standards, either internal, governmental, or required by the customer.

Quick-change process (QCP) A new common phase used to describe the techniques used to design and operate a packaging line that is always prepared to change from one product to another within a minute's notice. This encompasses quick changeover (QCO), clean-in-place (CIP), eradication of all possible adjustments, matchmark position settings for remaining adjustments, flexible crewing, tooling readiness, and a streamlined results-oriented management. A similar phrase is quick changeout.

Quick changeout The total downtime between production runs of different packages or the end of first production run to end of the next production run time. It encompasses the same time-period definition as the quick-change process involving preparation time, cleanup time, and changeover time.

Quick changeover (QCO) A new common phase used to describe the technique of effective tooling used to change a packaging line over from one product to another using no tools and can be done in minutes or less.

Relative humidity The ratio of actual humidity to the maximum humidity that air can retain without precipitation at a given temperature and pressure. Expressed as percent of saturation at a specified temperature. See also Absolute humidity.

Reliability The probability that a device or system will not fail within a given time frame under given conditions. Quantitatively, this is expressed as a true mathematical probability.

Requisition A form used to transmit purchasing information to the Buying Department regarding needs.

Reschedule The process of changing the duration and/or dates of an existing schedule in response to externally imposed conditions or progress.

Resource Any consumable, except time, required to accomplish an activity.

Return on equity (ROE) An accounting ratio used to evaluate the overall financial performance of an entire company. ROE compares the net earnings generated by a company to the shareholders' equity (net worth) of that business.

Return on investment (ROI) An accounting return measure (similar to RONA) that includes an inflation adjustment to the historical accounting value of the physical assets. ROI approximates the internal rate of return calculated on a computer.

Return on net assets (RONA) An accounting ratio used to evaluate the overall financial performance of an established business. RONA compares the net earning generated by a business with the net book value of the physical assets employed in that business.

Rework (Q) Components or packages produced that are of unacceptable quality but are acceptable for reprocessing (denoted by Q and q_i). Furthermore, the product is reclaimable and some input items are reusable. If the product cannot be restored to an acceptable quality, then it becomes wastage. In packaging, one could argue that the cost of selling off seconds is greater than the value received. Costs associated with rework are less than those associated with wastage, because rework does not cause large amounts of lost product, only lost time. Some costs incurred in the rework process are input item cost(s), overhead cost, and opportunity cost. Even assuming wastage is negligible, a decrease in rework will, in turn, lower production costs and increase output. In general, rework is an indicator of a process out of control.

RFP Request for proposal.

RFQ Request for quotation.

Rheology Study of the deformation and flow of matter.

Risk A perceived probability of failure or not achieving the target(s) or goal(s) as *originally* established at the start of the project as well as its consequences. Since we do not live in a perfect world, no project or decision is risk free. There are technical and political risks.

Risk, technical Risk strictly related to a new process, machine, or component used in packaging a known product, or a new untried product or package design. It is logical to assume that additional money and time will be expended in a direct relationship to the shortfalls that occur in the first attempt. Sometimes, management will deem a project that is partly successful to be satisfactory because the costs and time to correct the shortfall are not economical. In this case, although the project is technically a failure, politically it was approved. As a guideline, more than 70% of all projects fail to reach the original technical targets or goals. And less than half of all projects that have shortfalls are completely corrected. In some cases where the consequences are death, a low probability is of little comfort and must not be traded off. *Political risk* is a perceived probability of management's ability of not understanding the basic technical and marketing techniques and philosophies in order to make clear timely, and profitable decisions and to accept their consequences in the marketplace. It is also related to management's ability to admit to their mistakes quickly, change direction and to learn from the experience. Finally it relates to ego and power, elements of which make up humanity and the complexity of life. In some cases where the consequences are death, a low probability is of little comfort and must not be traded off.

Run speed The run speed of a machine is the instantaneous operating rate at some point in time. It is derived in terms of the output rate at that time. For example, if a machine is outputing at a rate of 300 (not necessarily quality) containers per minute (cpm) at a given point in time, then that is the run speed. As the time interval increases, the output rate is always lower than the run speed, because of stoppages, wastage, rework, and so on. When the output approaches the run speed for any given time period, then the line is approaching the steady-state condition. In a perfect world, the output and the run speed would be equal.

Run utilization The fraction of time the packaging line is producing output at a set run speed divided by the total time available for production. Note that changeover, cleanup, and prep work are not included. This factor can be considered the uptime during the producing time period.

Runup period The time required after the package changeout has been completed to get the given interval actual run speed (or output rate) to exceed the 80% of achievable run speed. The more correct term is transient period. If the packaging process cannot move out of the run up period quick enough, the loss in potential production can be staggering.

Sales and use taxes Taxes imposed on vendors or contractors and passed on to the purchaser on all applicable expenditures as required by state and local law.

Sanitize To reduce the microbial flora in or on articles such as food-plant equipment or eating utensils to levels judged safe by public-health authorities.

Sanitizer A chemical agent that reduces the number of microbial contaminants on food-contact surfaces to safe levels from the standpoint of public-health requirements. Sanitizing can also be done by heating.

Schedule The plan for completion of a project based on a logical arrangement of activities, resources available, imposed dates, or funding budgets.

Schedule capability (C_p) In simple terms, the schedule capability is the relative measure of how capable or how effective the actual packaging process is in producing the appropriate volume of needed packages within the planned plant operational time period or schedule. The schedule capability relates to the ratio of the scheduled run cycle time available divided by the actual package run cycle time used. This definition is valid only if the actual time taken is greater than the scheduled time. If the actual time is less than die scheduled time, the capability is the actual package run-cycle time divided by the scheduled run-cycle time. The schedule capability is always equal to or less than 1. The term *schedule capability* is sometimes shortened to just *capability*.

Scheduled package run cycle (SPRC) The *scheduled package* (or *product*) run cycle refers to the time that management allots the packaging line to yield a required quantity of quality packages. It can also be defined as the total plant asset available time based on a 24-h clock. If this definition is used, it should be defined as the asset package run cycle (APRC). In an ideal system, the scheduled package run cycle and the package run cycle are equal. Normally, the scheduled product run cycle is far longer than the product run cycle, based on the designed or historical output. For an optimized packaging process, PRC is usually more than 90% of the SPRC.

Scheduling The assignment of start and finish to all activities belonging to a project that indicate when the activities are expected to be performed.

Secondary spoilage Consists of those cans rusted or corroded as a result of bursting or leaking cans. May occur during warehousing.

Series elements Those machines connected in-line that perform unique functions so that the operation of each element is vital to the system. For example, if a line has one filler connected to one capper, these may be represented as series elements, because the failure or jam of either one will stop production almost immediately if no buffers exist.

Setup This is basically the same as the changeover but relates only to a given machine not the packaging line. It is defined as the completion of the following items:

1. The exchange of change over parts or tooling
2. The recalibration and/or adjustment of the machine
3. The preliminary test with samples

At the end of the procedure, the machine is expected to perform the desired function to produce a quality package at the achievable run speed.

Shelf life The length of time that a product will maintain market acceptability under specified conditions of storage. Also known as merchantable life.

Simulation The modeling or effect by computer, scaled models, or mathematics to play out a scenario or sequence of events that would give the appearance or outcome that approximates as close as possible the real world. A computer simulation is a means of representing the behavior of real life systems over time, using some combination of models, initial conditions, and discrete time steps. Real-time computer simulation is always the optimal condition.

Single minute exchange of die (SMED) As developed by Dr. Shigeo Shingo of Japan, this is a time and motion evaluation using industrial engineering techniques to facilitate the quick exchange of dies as used in the automotive stamping industry. There are some people who are attempting to use this technique and other similar techniques to acquire a quick change over capability for packaging lines. Extensions of these ideas are no tools, no time, no talent concept and quick changeover (QCO) as well as the rapid exchange no tool components developed by specialized companies such as Septimatech in Waterloo, Canada and enlightened and progressive OEMs.

SKU See Stockkeeping unit.

Solvent A substance which dissolves or holds another substance in solution such as common salt in water. Solvents are used in some foods as carriers for flavors, colors, stabilizers, emulsifiers, antioxidants, and other ingredients.

Speed factor (S_f) The actual average output rate or actual run speed of a packaging line divided by the achievable run speed of the packaging line, for a given package run cycle and time period. It does not include changeover, prep time, and cleanup that are already in utilization.

Standard practice A written description of the minimum necessary to meet the intent of policy and standards. To the extent possible, standards should describe the "what" and not the "how."

Statistical control The state of predictable stability.

Statistical process control (SPC) A statistical method of using control charts to monitor whether a process is in or out of control. It is a method that requires planning teamwork, methodology of measurement, knowledge of measurement techniques, and acute knowledge of the process. In most causes, the packaging process must be improved first before control charts can be use effectively.

Statistical quality control (SQC) The use of statistical techniques for process control or product and package inspection. It also includes the use of experimental design techniques for process improvement.

Stockkeeping unit (SKU) An industry term that details the assortment or variety of items shipped in "one" physical case.

Stoppage A short time occurrence that causes the packaging line or any portion of the packaging line to cease production of a quality package. A stoppage is made up of frequency and duration.

Surfactant Surface-active agent.

System A collection of one or more elements (e.g., machines) that are combined to perform some overall function. A packaging process (line) and a given section of a line having more than two elements or functions are examples of systems.

System downtime The total amount of time the packaging line stopped or ceased production during the run period. System downtime is generally less than the total sum of all machine and conveyor downtimes, because of buffers and idle machine factors. It is best measured after the last operation in the packaging process, which usually is palletizing. System downtime normally should not include changeover, cleanup, and prep time periods. These times should be documented separately.

System utilization In general, *system utilization* refers to how effectively time is used during production. With regard to packaging lines, utilization is the fraction of the total package run cycle that is actually used to produce a needed quantity of quality packages. With regard to machines or subsystems, system utilization quantifies the fraction of productive time that remains after factoring in the effects of wastage, rework, changeover, breaks, restraints, stoppages, and so on. *System utilization* refers to how effectively time is used during the production period. With regard to packaging lines, system utilization is the fraction of the total package run cycle that is actually used to produce a needed quantity of quality packages at a set run peed rate. In this *Encyclopedia* the word *utilization* is used to refer to system utilization, except with respect to machine elements. Another way is to say the system utilization is a fraction that quantifies the amount of productive time that remains after factoring in the appropriate effects of downtime over the package run cycle. Some people call this "uptime."

Target cost The estimated cost to accomplish the project contract as defined by the estimate design basis and the project objectives. The target cost assumes that project execution during design, construction, and initial startup will meet the normal performance standards of the company. The sum of all direct and indirect costs. By definition, the target cost is a tight but realistic figure that should have an equal chance of being overspent or underspent. It excludes "management reserve."

Target date The date an activity is desired to be started or completed, imposed, or requested by client or program management.

Team approach Basically, this means using teamwork to accomplish goals. Teamwork is the dedicated work of a team or number of associated persons of different talents and abilities acting together in a joint action or endeavor with reference to coordination of effort and collective efficiency. The team should be made up of internal and external resources, management, operators, and maintenance personnel.

Temper A measure of the ductility and hardness of steel plate.

Thermocouple A bimetallic device used to measure temperatures electrically.

Tolerance A specified allowance for deviations in weighing, measuring, and so on from the standard dimensions or weight.

Total quality management (TQM) "Quality" is made up of conformance to specifications as well as conformance to the customer's expectations. Expectations are extremely difficult to measure, because this includes perceived elements. Total quality management is a philosophy of how to bring about quality. Deming and Derant agree that quality is not the problem, it is the solution. Improving quality entails low upfront costs while returns are extremely high. Typically, in the 1980s, 25% of the workforce was busy doing rework. It is estimated that reducing defectives or wastage by 5% increases revenue by 25–85%. The following are TQM milestones:

Quality is achieved by working on the process, striving to eliminate variability, and not by reworking or wasting products or packages.

It is the line operators and maintenance that should control the process, not the QC department. Quality is everyone's job.

Instead of directions, explain intent; take advantage of workers' talents, do not view them as machines or items to be replaced. Workers should be trained for flexibility. Workers should be trained to use "statistical quality control" and other tools such as PRC, DFA, and CCS.

When a problem arises, or a defective product is found, it should be viewed as an opportunity to learn about the process, not as an excuse to blame someone. Learn from your customers by getting their ideas, concerns, and recommendations.

Strive for evolution and innovations, not revolutions and inventions.

Total productive maintenance (TPM) A philosophy or management tool that view maintenance not as a necessary evil, but a vital operation that contributes to the productivity and profitability of the company. For JIT to work, one of the keys is to ensure the process availability to produce is maximized. A coordinated maintenance program with integrates QCP, TQM, preventive maintenance, predictive maintenance, and DFA is what is needed to have a successful TPM program.

Throughput Throughput for a given packaging line and product is the exact quantity of quality packages produced in a package run cycle as required by the customer and shipped to the customer. It is denoted by the symbol Y. Similarly, we define the throughput for a machine or throughput rate as the number of items (of acceptable quality) leaving a machine in a given amount of time. We denote this by y_i for the ith machine. The word *throughput* has the same definition as *output*.

Training *Training* is the same as *qualifying*. Training is the act of setting up and administering a training program that ensures the people who will be interfacing with the packaging line are given a thorough overview of the packaging line and a detailed program on what they need to know to complete their tasks without hesitation or guessing. All training should address the following points:

1. Whom should be trained?
2. Why should training be done?
3. When should training be done?
4. What training should be done?
5. How should we do training?
6. Where should we do training?
7. How much is enough training?
8. Manuals and other self-help tools.
9. Performance reviews and continuing improvement.
10. Company standards and policy.
11. Equipment effectiveness analysis.
12. Retrofits, adjustments, and additions to new, modified, or existing packaging lines.
13. The team approach.

Training prerequisites The skills and knowledge that a learner should have before training starts on a new technology.

Training qualification A test for learners that is both written and hands on.

Training resources Training experts such as teachers, photographers, technical writers, and illustrators.

Transient period The time required after the package changeout has been completed to get the given interval actual run speed (or output rate) to exceed the 80% of achievable run speed. This is sometimes called the "runup period." If the packaging process cannot move out of the transient period quickly enough, the loss in potential production can be staggering.

Translucent Descriptive of a material or substance capable of transmitting some light but is not clear enough to be seen through.

Transparent Descriptive of a material or substance capable of a high degree of light transmission (e.g., glass).

Uptime The time a machine or process is available to produce a quality product during the run period of the package run cycle.

Utilization (*U*) The fraction of a defined time period that is actually used to produce quality packages. There are many definitions of utilization, but there are five main types of utilization:

1. System utilization
2. Run utilization
3. Package changeout utilization
4. Element or machine utilization
5. Asset utilization

System utilization is the fraction of the total package run cycle that is actually used to produce a needed quantity of quality packages at a set run speed. In this *Encyclopedia* when we use the word utilization, we refer to system utilization. Another way is to say that system utilization is a fraction that quantifies the amount of productive time that remains after factoring in the appropriate effects of downtime over the package run cycle. Some people call this "uptime." *Run utilization* is the fraction of time the packaging line is producing output at a set run speed divided by the total time available for production. Note that changeover, cleanup, and prep work are not included. This factor can be considered the uptime during the producing time period. *Package changeout utilization* is the fraction of the package run cycle time the packaging line has available for producing output at a set run speed after changeover, cleanup, and prep time have been completed. *Element utilization* is the fraction of time a given machine or element is actually producing output at a set run speed divided by the total time available for production. Note that changeover, cleanup, and prep work are not included. This definition usually relates to machinery and/or components. *Asset utilization* is the fraction of a 24-h-per-day clock that is actually used in producing quality packages until the package run cycle is completed. If the package run cycle takes exactly 3 days, then the total asset utilization time is $24 \times 3 = 72$ h, even though only one shift per day is being used. When calculating performance index (PI), only the system utilization is used that considers the entire package run cycle with changeover, cleanup, prep work, and run utilization. Run utilization is used to get an overview of the integration, control, and elements that make up the total packaging line. Element utilization is used to get an overview of a given Machine, conveyor, or equipment. It can be used as a general guideline for acceptance of a vendor's machine. But for a specific specification for acceptance of a vendor's machine, the disturbance frequency (DF) should be used with the element utilization. In this *Encyclopedia* the word *utilization* refers to system utilization.

Vacuum packaging Packaging in containers, whether rigid or flexible, from which substantially all gases have been removed prior to final sealing of the container.

Value analysis A systematic approach to simplification and standardization of products so that they provide needed value at minimum cost. Usually applied to existing products to reduce input counts or amount of packaging.

Value engineering A corporate engineering tool used in meeting a sharply defined objective that is capable of measurement and control by corporate managers. Most objectives of value engineering are often associated with cost-reduction programs. Value engineering uses the systematic job plan consisting of the following steps:

1. Stating the problem
2. Forming the hypothesis
3. Observing and experimenting
4. Interpreting data
5. Drawing conclusions or solutions

The test for value functions are

Reliability
Performance
Quality
Weight
Packaging
Maintenance and servicing
Appearance
Initial costs
Lead time
Human factors
Productivity
Capital investment

Variables Quantities that describe the current operating state of a machine or system. Output rate, wastage rate, and cycle rates are examples of variables.

Verifying The act of being able to determine without hesitation that the machine testing and training of personnel is not only thorough but also effective in the day to day production of the packaging line without senior staff, consultants, and/or machinery service personnel being involved in any shape or form.

Viscometer An instrument to measure viscosity.

Viscosity Internal friction or resistance to flow of a liquid. The constant ratio of shearing stress to rate of shear. In liquids for which this ratio is a function of stress, the term *apparent viscosity* is defined as this ratio.

Wastage (*W*) Components or packages produced that are of unacceptable quality. The quantity of such items is denoted by the symbol W for a system and w_i for the ith machine. This items of unacceptable quality cannot be reused or recycled back into the system. As a general policy, food and pharmaceutical products that fall onto the production floor are discarded and are therefore wastage. In other industries, wastage may be reworked. Usually, employees use their discretion to decide on wastage items, unless company policy or government regulations clearly define wastage. Wastage increases manufacturing costs. Some basic costs relating to wastage are as follows:

1. Initial cost for the product and/or inputs
2. Overhead cost
3. Opportunity cost
4. Disposal cost
5. Recycling cost

A decrease in wastage will, in turn, lower production costs and increase output. In general, wastage is an indicator of a process out of control.

Working capital The estimated cash investment in inventories and accounts receivable, minus accounts payable.

INDEX

The Wiley Encyclopedia of Packaging Technology, Third Edition,
Edited by Kit L. Yam.